From: "Massie, Wayne (GE Infra, Energy, Non-GE)" <wayne.massie@ge.com>
To: <lwr@nrc.gov>
Date: 9/22/2006 12:52:12 PM
Subject: FW: First Installment of Response to BNL request for Confirmatory Analysis of RB/FB Truncated Model

Larry,

Truncated model information as committed in NRC/GE/BNL telecon. As noted below, this is an in-process report to support this continuing issue resolution. Information contained is not proprietary. It should be shared with the NRC/BNL reviewers to support ongoing communications.

wamassie

> -----Original Message-----
> From: Liu, Ai-Shen (GE Infra, Energy)
> Sent: Friday, September 22, 2006 9:28 AM
> To: Massie, Wayne (GE Infra, Energy, Non-GE)
> Cc: Solorzano, Enrique R. (GE Infra, Energy); Upton, Hugh A. (GE Infra, Energy)
> Subject: First Installment of Response to BNL request for Confirmatory Analysis of RB/FB Truncated Model
>
> Wayne,
>
> Enclosed please find Shimizu report SER-ESB-038 Rev. 0 containing load conditions for Item 1 of GE planned response due today to the NRC. This is an in-progress report.
>
> > <<SER-ESB-038_R0.pdf>>
>
> Ai-Shen Liu
> Phone: 408-925-5963
> Fax: 910-341-2503
> e-mail: ai-shen.liu@ge.com
>

Mail Envelope Properties (451414AA.563 : 19 : 13667)

Subject: FW: First Installment of Response to BNL request for Confirmatory Analysis of RB/FB Truncated Model
Creation Date 9/22/2006 12:51:35 PM
From: "Massie, Wayne (GE Infra, Energy, Non-GE)" <wayne.massie@ge.com>

Created By: wayne.massie@ge.com

Recipients
nrc.gov
TWGWPO03.HQGWDO01
LWR (Lawrence Rossbach)

Post Office **Route**

Files	Size	Date & Time
MESSAGE	1019	9/22/2006 12:51:35 PM
SER-ESB-038_R0.pdf	289309	
Mime.822	399298	

Options

Expiration Date:	None
Priority:	Standard
ReplyRequested:	No
Return Notification:	None
Concealed Subject:	No
Security:	Standard

Junk Mail Handling Evaluation Results

Message is eligible for Junk Mail handling
This message was not classified as Junk Mail

Junk Mail settings when this message was delivered

Junk Mail handling disabled by User
Junk Mail handling disabled by Administrator
Junk List is not enabled
Junk Mail using personal address books is not enabled
Block List is not enabled

Shimizu Engineering Report

Project	General Electric Company ESBWR Project	Shimizu Document No.	SER-ESB-038
Title	Modified RBFB Truncated FE Model Analysis Data	Rev.	0
		Issued Date	9/22/06
		Revised Date	

NOTE:

This document provides the data for the truncated Reactor/Fuel Buildings Finite Element (FE) model analysis in response to NRC's request in the DCD audit for RAI 3.8 held on July, 2006.
The requested data was originally issued by SER-ESB-027. NRC reviewed it and requested some simplification and clarification. This document provides the data modified in accordance with NRC's request.
It should be noted that this revision includes the information of the load conditions used for the analyses. Other information, i.e. analysis model and analysis results, will be added in following revisions in accordance with the schedule indicated by GE.

Rev.	Date	Note	Approve	Review	Prepare
0	9/22/06	Initial Issue	Y.O.	T.T.	T.T.

Shimizu Corporation	Prepared by	T. Toyota	9/22/06
	Reviewed by	T. Takahashi	9/22/06
	Approved by	Y. Orito	9/22/06

1. SCOPE

At NRC's audit on the ESBWR DCD RAI 3.8, NRC requested GE to provide the data needed to perform their verification analyses using a truncated Reactor Building and Fuel Building (RB/FB) Finite Element (FE) model. Per NRC's request, the data of the original truncated model analysis were provided by Reference 1. However, after reviewing of the original data, NRC requested to simplify and clarify the analysis data.

This report provides the load conditions and analysis model modified in accordance with NRC's request. NASTRAN analysis results for the modified load conditions are also included in this report.

Major modifications on the analysis data are as follows.

a. Load conditions: Loads applied to the model are simplified.

b. Analysis model: The model is modified for the following portions.

- Increase of Spent Fuel Pool slab (Basemat) thickness
- Increase of cylindrical wall thickness at the half north side under the Suppression Pool
- Addition of radial walls under the Suppression Pool

2. Reference

1. SER-ESB-027 "Reactor Building/Fuel Buildings Truncated FE Model Analysis Data," Rev. 1

3. LOAD CONDITION

Analyses are performed for the following loads.

- Dead Load
- Pressure Load (at 72 hr. after LOCA)
- Seismic Load
- Hydrostatic Load

The load conditions are summarized in Tables 3-1 through 3-5 and Figures 3-1 and 3-2. Figure 3-3 shows the names and locations of the walls in the truncated FE model.

The evaluation methods of the applied loads are described in the following sections.

It should be noted that the applied loads described in this report mean those applied to the top boundary nodes of the truncated model, i.e. boundary loads, unless noted otherwise.

In addition, loads are not applied to the cylindrical walls and radial walls under the Suppression Pool, since these walls are not connected to the RCCV wall nor RPV pedestal wall through normal rigid slabs. The walls are modeled to consider their constraint effects to the basemat.

3.1 Dead Load

Dead loads applied to the model are evaluated based on the weight of the seismic stick model. Weights of the RBFB, RCCV, and RPV pedestal in the seismic model are converted to the uniform line loads as shown in Tables 3-6 through 3-8. For the RBFB walls, the weights are distributed to each wall in proportion to its sectional area.

3.2 Seismic Load

3.2.1 *Shear Force*

Seismic shear forces are evaluated using the design seismic loads at the base of the buildings. As shown in Table 3-9, the loads for the RBFB are applied to the box walls which are parallel to the direction of the applied shear force. For the RCCV and RPV pedestal, loads are applied to the half areas of the walls as described in Tables 3-10 and 3-11.

3.2.2 *Overturning Moment*

Seismic overturning moments are evaluated based on the design seismic loads. Since the design overturning moment is defined at each floor level, the values at the top of the truncated model are calculated by the equation shown in Table 3-12.

Overturning moments are applied as vertical coupling forces to the walls perpendicular to the earthquake direction. Evaluation methods of the applied loads are shown in Tables 3-13 through 3-15.

3.2.3 *Vertical Force*

Applied loads for the vertical earthquake are determined using the maximum axial forces obtained from seismic analyses. The loads are distributed to the wall in the same manner as the dead load. Tables 3-16 through 3-18 summarize the calculation results of the vertical seismic load.

3.3 Pressure Load

Analysis is performed for the pressure load at the LOCA after 72 hr (45 psig = 0.31 MPa). The loads are applied to the inside surface of the RPV pedestal and the top surface of the Basemat as a uniform pressure load as shown Figure 3-1.

As the boundary loads at the top of model, the loads in the radial and vertical directions, which are evaluated from the results of the global FE model analysis, are applied together with pressure loads. The loads are summarized in Table 3-19 and 3-20. The loads in the hoop direction are not considered since they are negligibly small.

3.4 Hydrostatic Load

Hydrostatic load applied to the inside surfaces of Spent Fuel Pool walls and slab are shown in Figure 3-2. The boundary loads are calculated as shown in Table 3-21.

4. Modify Truncated Model

<Later>

5. Results of Analysis for Truncated model

<Later>

Table 3-1 Summary of Dead Load

Components	Wall Name	Load Value (MN/m)	Direction
Axial	RA	-2.681	Vertical (+:Upward)
	RG	-2.681	
	R1	-2.681	
	R7	-2.681	
	F3-1	-4.825	
	F3-2	-2.681	
	Iw-R1	-1.340	
	Iw-R2	-1.340	
	Iw-R3	-1.340	
	Iw-R4	-1.340	
	Iw-F1	-2.346	
	Iw-F2	-2.010	
	Iw-F3	-2.010	
	Iw-F4	-2.010	
	Iw-F5	-1.340	
	Iw-F6	-0.804	
	Iw-F7	-2.547	
	Iw-F8	-2.681	
	Iw-F9	-1.340	
	Iw-F10	-1.340	
	Iw-F11	-1.340	
	Iw-F12	-1.541	
	Iw-F13	-1.340	
	RCCV	-5.329	
	Pedestal	-4.245	

Note1: These loads are applied to top of the wall shown in the table
Note2: For the locations of walls, see Figure 3-3.

Table 3-2 Summary of Seismic Shear Force and Overturning Moment

Components	Wall Name	Load Value (MN/m)	Direction
Shear (N to S)	RA	6.693	Horizontal (+:X)
	RG	6.693	
	RCCV_ns	4.226	
	Pedestal_ns	4.719	
Shear (W to E)	R1	6.687	Horizontal (+:Y)
	R7	6.687	
	F3-1	12.036	
	F3-2	6.687	
	RCCV_ew	5.096	
	Pedestal_ew	5.688	
Moment (N to S)	R1	10.369	Vertical (+:Upward)
	R7	-1.550	
	F3-1	-12.377	
	F3-2	-6.876	
	RCCV_ew	9.933	
	Pedestal_ew	9.847	
Moment (W to E)	RA	-10.201	Vertical (+:Upward)
	RG	10.201	
	RCCV_ns	13.142	
	Pedestal_ns	12.460	

Note1: These loads are applied to top of the wall shown in the table
Note2: For the locations of walls, see Figure 3-3.

Table 3-3 Summary of Seismic Vertical Force

Components	Wall Name	Load Value (MN/m)	Direction
Vertical (Axial)	RA	1.248	Vertical (+:Upward)
	RG	1.248	
	R1	1.248	
	R7	1.248	
	F3-1	2.247	
	F3-2	1.248	
	Iw-R1	0.624	
	Iw-R2	0.624	
	Iw-R3	0.624	
	Iw-R4	0.624	
	Iw-F1	1.092	
	Iw-F2	0.936	
	Iw-F3	0.936	
	Iw-F4	0.936	
	Iw-F5	0.624	
	Iw-F6	0.375	
	Iw-F7	1.186	
	Iw-F8	1.248	
	Iw-F9	0.624	
	Iw-F10	0.624	
	Iw-F11	0.624	
	Iw-F12	0.718	
	Iw-F13	0.624	
	RCCV	3.102	
	Pedestal	2.428	

Note1: These loads are applied to top of the wall shown in the table
Note2: For the locations of walls, see Figure 3-3.

Table 3-4 Summary of Pressure Load

Components	Wall Name	Load Value (MN/m)	Direction
Radial & Vertical	RCCV	0.309	Radial (Outward: +)
		0.816	Vertical (+:Upward)
	Pedestal	0.909	Radial (Outward: +)
		-1.608	Vertical (+:Upward)

Note1: These loads are applied to top of the wall shown in the table.
Note2: Pressure loads applied to elements directly are shown in Figure 3-1.

Table 3-5 Summary of Hydrostatic Pressure Load

Components	Wall Name	Load Value (MN/m)	Direction
Horizontal	RA	0.835	+Y
	F3-1	0.835	+X
	Iw-F2	-0.835	+Y
	Iw-F3	-0.835	+Y
	Iw-F7	-0.835	+X

Note1: These loads are applied to top of the wall shown in the table.
Note2: Hydrostatic pressure loads applied to elements directly are shown in Figure 3-2.

Table 3-6 Evaluation of Dead Load for the RBFB

Load*1 (MN)	Portion	Direction	Thickness*2 (t: m)	Length*2 (l: m)	Area (A: m^2)	Unit Load 1*3 (MN/m^2)	Unit Load 2*4 (MN/m)
-1030.315	RA	X	2.00	68.0	136.000		-2.681
	RG	X	2.00	68.0	136.000		-2.681
	R1	Y	2.00	47.0	94.000		-2.681
	R7	Y	2.00	47.0	94.000		-2.681
	F3-1	Y	3.60	16.6	59.760		-4.825
	F3-2	Y	2.00	30.4	60.800		-2.681
	Iw-R1	X	1.00	12.0	12.000		-1.340
	Iw-R2	X	1.00	12.0	12.000		-1.340
	Iw-R3	Y	1.00	12.0	12.000		-1.340
	Iw-R4	Y	1.00	12.0	12.000		-1.340
	Iw-F1	X	1.75	4.2	7.350		-2.346
	Iw-F2	X	1.50	2.1	3.150		-2.010
	Iw-F3	X	1.50	12.9	19.350		-2.010
	Iw-F4	X	1.50	8.1	12.150		-2.010
	Iw-F5	X	1.00	12.9	12.900		-1.340
	Iw-F6	X	0.60	16.8	10.080		-0.804
	Iw-F7	Y	1.90	16.6	31.540		-2.547
	Iw-F8	Y	2.00	4.1	8.200		-2.681
	Iw-F9	Y	1.00	8.4	8.400		-1.340
	Iw-F10	Y	1.00	5.5	5.500		-1.340
	Iw-F11	Y	1.00	6.8	6.800		-1.340
	Iw-F12	Y	1.15	5.5	6.325		-1.541
	Iw-F13	Y	1.00	8.4	8.400		-1.340
	Total	-	-	-	768.705	-1.340	-

*1: Load is the same value as the stick model weight.
*2: Thickness and length are dimensions in the FE Model
*3: "Unit Load 1" is the load per unit area. Unit Load 1 = Load / Total A
*4: "Unit Load 2" is the load per unit length. Unit Load 2 = Unit Load 1 * t

Table 3-7 Evaluation of Dead Load for the RCCV

Load*1 (MN)	Portion	Direction	Thickness (t: m)	Length*2 (l: m)	Unit Load*3 (MN/m)
-636.12	RCCV	-	2.00	119.4	-5.329

*1: Load is the same value as the stick model weight.
*2: Length = 19.0 (Radius of the modeled RCCV wall) * 2 * π
*3: "Unit Load" is the load per unit length. Unit Load = Load / l

Table 3-8 Evaluation of Dead Load for the RPV Pedestal

Load*1 (MN)	Portion	Direction	Thickness (t: m)	Length*2 (l: m)	Unit Load*3 (MN/m)
-181.358	Pedestal	-	2.40	42.7	-4.245

*1: Load is the same value as the stick model weight.
*2: Length = 6.8 (Radius of the modeled RPV pedestal) * 2 * π
*3: "Unit Load" is the load per unit length. Unit Load = Load / l

Table 3-9 Evaluation of the Seismic Shear Force for the RBFB

Seismic Direction	Load*1 (MN)	Portion	Direction*2	Thickness*3 (t: m)	Length*3 (l: m)	Area (A: m^2)	Unit Load 1*4 (MN/m^2)	Unit Load 2*5 (MN/m)
N to S	910.26	RA	X	2.00	68.0	136.000		6.693
		RG	X	2.00	68.0	136.000		6.693
		Total	-	-	-	272.000	3.347	-
W to E	1031.66	R1	Y	2.00	47.0	94.000		6.687
		R7	Y	2.00	47.0	94.000		6.687
		F3-1	Y	3.60	16.6	59.760		12.036
		F3-2	Y	2.00	30.4	60.800		6.687
		Total	-	-	-	308.560	3.343	-

*1: Load is the design seismic shear force at the bottom of the RBFB Walls.
*2: Walls in the same direction as seismic direction are considered.
*3: Thickness and length are dimensions on the FE Model
*4: "Unit Load 1" is the load per unit area. Unit Load 1 = Load / Total A
*5: "Unit Load 2" is the load per unit length. Unit Load 2 = Unit Load 1 * t

Table 3-10 Evaluation of the Seismic Shear Force for the RCCV

Seismic Direction	Load*1 (MN)	Portion*2	Direction	Thickness (t: m)	Length*3 (l: m)	Unit Load*4 (MN/m)
N to S	252.230	RCCV_ns	X	2.00	59.7	4.226
W to E	304.200	RCCV_ew	Y	2.00	59.7	5.096

*1: Load is the design seismic shear force at the bottom of RBFB Wall.
*2: For the portion where the load is applied, see Figure 3-3.
*3: Length is evaluated as effective length. Length = 19.0 (Radius on the FE Model) * 2 * π /2
*4: "Unit Load" is the load per unit length. Unit Load = Load / l

Table 3-11 Evaluation of the Seismic Shear Force for the RPV Pedestal

Seismic Direction	Load*1 (MN)	Portion*2	Direction	Thickness (t: m)	Length*3 (l: m)	Unit Load*4 (MN/m)
N to S	100.810	Pedestal_ns	X	2.40	21.4	4.719
W to E	121.510	Pedestal_ew	Y	2.40	21.4	5.688

*1: Load is the design seismic shear force at the bottom of RBFB Wall.
*2: For the portion where the load is applied, see Figure 3-3.
*3: Length is evaluated as effective length. Length = 6.8 (Radius on the FE Model) * 2 * π /2
*4: "Unit Load" is the load per unit length. Unit Load = Load / l

Table 3-12 Moment of the Top of Truncated Model

	Level	Stick Model		Moment* (MNm)		
					Direction of Earthquake	
	(m)	EID	NID	#	NS	EW
RBFB	-6.4		101	*Mi*	29730	30230
	-8.7	1101		*M*	31611	32602
	-11.5		2	*Mj*	33900	35490
RCCV	-6.4		201	*Mi*	9560	12720
	-8.7	1201		*M*	10142	13419
	-11.5		2	*Mj*	10850	14270
RPV Pedestal	-6.4		301	*Mi*	1056	1350
	-8.7	1301		*M*	1288	1630
	-11.5		2	*Mj*	1570	1970

Note1: Mi, Mj: design overturning moment

Note2: Moments (M) at EL-8.7m are applied as boundary loads.

The moment (M) is calculated from the following equation.

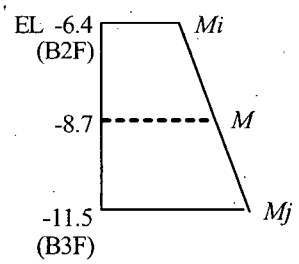

$$M = \frac{(-6.4-(-8.7))\cdot(Mj-Mi)}{(-6.4-(-11.5))} + Mi$$

$$= \frac{2.3\cdot(Mj-Mi)}{5.1} + Mi$$

Table 3-13 Evaluation of the Seismic Moment for the RBFB

Seismic Dir.	Load*1 (MN·m)	Portion	Thickness*3 (t: m)	Length*3 (l: m)	Area (A: m^2)	Distance (d0: m) R1 ~ ea. Wall C.	C. of Stiff. from R1 (m)*4	Distance (d: m) C.ofStiff.~Wall C.	Moment of Inertia (I: m^4)*5	Unit Load1*6 ($MN/m^2/m$)	Unit Load2*7 (MN/m)
N to S	31611	R1	2.00	47.0	94.000	0.00		40.887	157144		10.369
		R7	2.00	47.0	94.000	47.00		-6.113	3513		-1.550
		F3-1	3.60	16.6	59.760	68.00		-27.113	43931		-12.377
		F3-2	2.00	30.4	60.800	68.00		-27.113	44695		-6.876
		Total	-	-	308.560		40.887		249282	0.127	
W to E	32602	RA	2.00	68.0	136.000	47.00		-23.500	75106		-10.201
		RG	2.00	68.0	136.000	0.00		23.500	75106		10.201
		Total	-	-	272.000		23.500		150212	0.217	

*1: Refer to Table 3-12.
*2: Orthogonal direction walls to seismic direction are considered.
*3: Thickness and length are dimensions on the FE Model.
*4: Center of Stiffness = S(A*d0)/Total A
*5: Moment Inertia = $A * d^2$
*6: Unit Load1 = Load / Total I
*7: Unit Load2 = Unit Load1 * t * d

Table 3-14 Evaluation of the Seismic Moment for the RCCV

Seismic Direction	Load*1 (MN·m)	Portion	Direction	Model Radius (*r*: m)	Unit Load*2 (*q*: MN/m)
N to S	10142	RCCV_ew	Y	19.00	9.933
W to E	13419	RCCV_ns	X	19.00	13.142

*1: Refer to Table 3-12.

*2: Unit Load = Load / (2 * 20.5 * r2) (Refer to following the figure.)

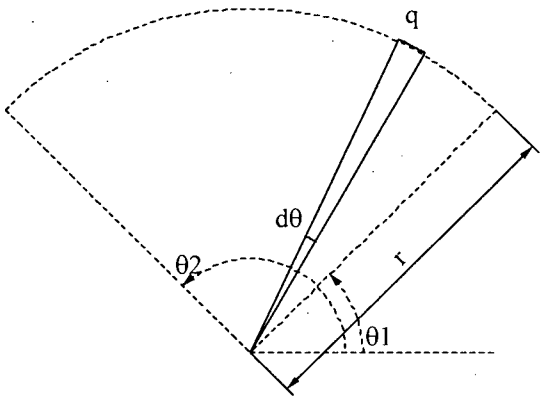

$$M = 2\int_{\theta 1}^{\theta 2} q \cdot r \cdot \sin\theta \cdot r \cdot d\theta$$

$$= 2\sqrt{2} \cdot q \cdot r^2$$

$$\therefore\ q = \frac{M}{2\sqrt{2}r^2}$$

Table 3-15 Evaluation of the Seismic Moment for the RPV Pedestal

Seismic Direction	Load*1 (MN·m)	Portion	Direction	Model Radius (r: m)	Unit Load*2 (*q*: MN/m)
N to S	1288	Pedestal_ew	Y	6.80	9.847
W to E	1630	Pedestal_ns	X	6.80	12.460

*1: Refer to Table 3-12.

*2: Unit Load = Load / (2 * 20.5 * r2) (Refer to the figure in Table 3-14.)

Table 3-16 Evaluation of the Seismic Vertical Force for the RBFB

Load*1 (MN)	Portion	Direction	Thickness*2 (t: m)	Length*2 (l: m)	Area (A: m^2)	Unit Load 1*3 (MN/m^2)	Unit Load 2*4 (MN/m)
479.840	RA	X	2.00	68.0	136.000		1.248
	RG	X	2.00	68.0	136.000		1.248
	R1	Y	2.00	47.0	94.000		1.248
	R7	Y	2.00	47.0	94.000		1.248
	F3-1	Y	3.60	16.6	59.760		2.247
	F3-2	Y	2.00	30.4	60.800		1.248
	Iw-R1	X	1.00	12.0	12.000		0.624
	Iw-R2	X	1.00	12.0	12.000		0.624
	Iw-R3	Y	1.00	12.0	12.000		0.624
	Iw-R4	Y	1.00	12.0	12.000		0.624
	Iw-F1	X	1.75	4.2	7.350		1.092
	Iw-F2	X	1.50	2.1	3.150		0.936
	Iw-F3	X	1.50	12.9	19.350		0.936
	Iw-F4	X	1.50	8.1	12.150		0.936
	Iw-F5	X	1.00	12.9	12.900		0.624
	Iw-F6	X	0.60	16.8	10.080		0.375
	Iw-F7	Y	1.90	16.6	31.540		1.186
	Iw-F8	Y	2.00	4.1	8.200		1.248
	Iw-F9	Y	1.00	8.4	8.400		0.624
	Iw-F10	Y	1.00	5.5	5.500		0.624
	Iw-F11	Y	1.00	6.8	6.800		0.624
	Iw-F12	Y	1.15	5.5	6.325		0.718
	Iw-F13	Y	1.00	8.4	8.400		0.624
	Total	-	-	-	768.705	0.624	-

*1: Load is the maximum axial force of dynamic analysis by the stick model.
*2: Thickness and length are dimensions on the FE Model
*3: "Unit Load 1" is the load per unit area. Unit Load 1 = Load / Total A
*4: "Unit Load 2" is the load per unit length. Unit Load 2 = Unit Load 1 * t.

Table 3-17 Evaluation of the Seismic Vertical Force for the RCCV

Load*1 (MN)	Portion	Direction	Thickness (t: m)	Length*2 (l: m)	Unit Load*3 (MN/m)
370.300	RCCV	-	2.00	119.4	3.102

*1: Load is the maximum axial force obtained from the stick model seismic analysis.
*2: Length = 19.0 (Radius on the FE Model) * 2 * π
*3: "Unit Load" is the load per unit length. Unit Load = Load / l

Table 3-18 Evaluation of the Seismic Vertical Force for the RPV Pedestal

Load*1 (MN)	Portion	Direction	Thickness (t: m)	Length*2 (l: m)	Unit Load*3 (MN/m)
103.750	Pedestal	-	2.40	42.7	2.428

*1: Load is the maximum axial force obtained from the stick model seismic analysis.
*2: Length = 6.8 (Radius on the FE Model) * 2 * π
*3: "Unit Load" is the load per unit length. Unit Load = Load / l

Table 3-19 Evaluation of the Pressure Load for the RCCV

Average Force (MN/node)		Nodal Tributary Length (L: m)	Unit Load (MN/m)	
Radial	Vertical		Radial	Vertical
0.768	2.031	2.487	0.309	0.816

Note1: Average Forces are calculated from nodal force at EL -8.7m of the global FE model analysis
Note2: L = 19.0(Radius of the modeled RCCV wall) * 2 * π / 48(nodes)
Note3: Unit Load = [Average Force] / L

Table 3-20 Evaluation of the Pressure Load for the RPV Pedestal

Average Force (MN/node)		Nodal Tributary Length (L: m)	Unit Load (MN/m)	
Radial	Vertical		Radial	Vertical
0.809	-1.432	0.890	0.909	-1.608

Note1: Average Forces are calculated from nodal force at EL -8.7m of the global FE model analysis
Note2: L = 6.8(Radius of the modeled RPV pedestal) * 2 * π / 48(nodes)
Note3: Unit Load = [Average Force] / L

Table 3-21 Evaluation of the Hydrostatic Pressure Load for the Spent Fuel Pool

Spent Fuel Pool			Truncated Model		
Top (EL. m)	Bottom (EL. m)	Depth (m)	Model Top (EL. m)	Depth above Model d (m)	Boundary Load* L (MN/m)
4.35	-10.00	14.35	-8.7	13.05	0.835

*: Boundary Load is calculated following equation. (Refer to Figure 3-2.)

L = 1.0(t/m3) * d / 9.807 * d / 2

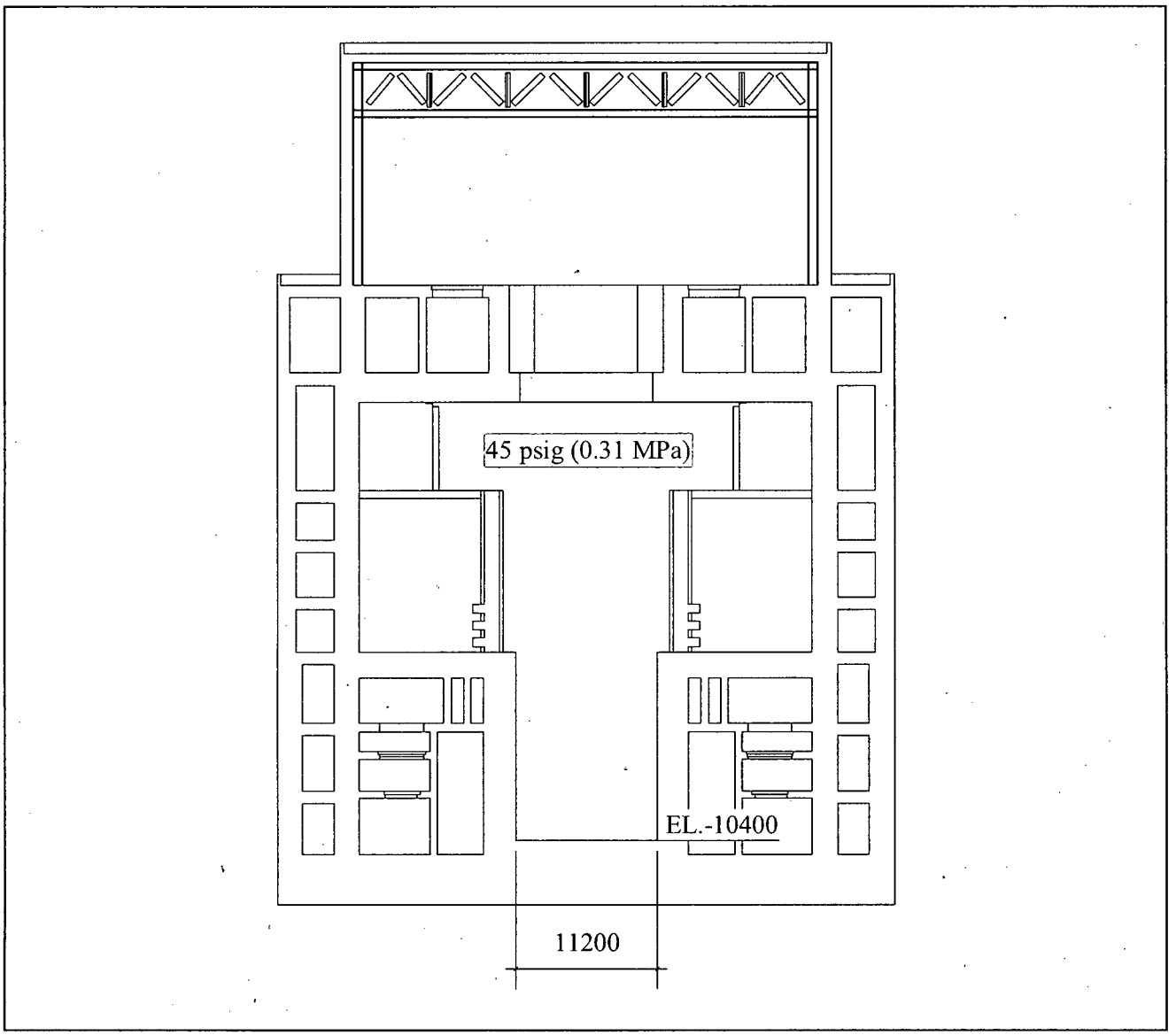

Figure 3-1 Pressure Load Applied to the RCCV Wall and the Basemat at 72 hr. after LOCA

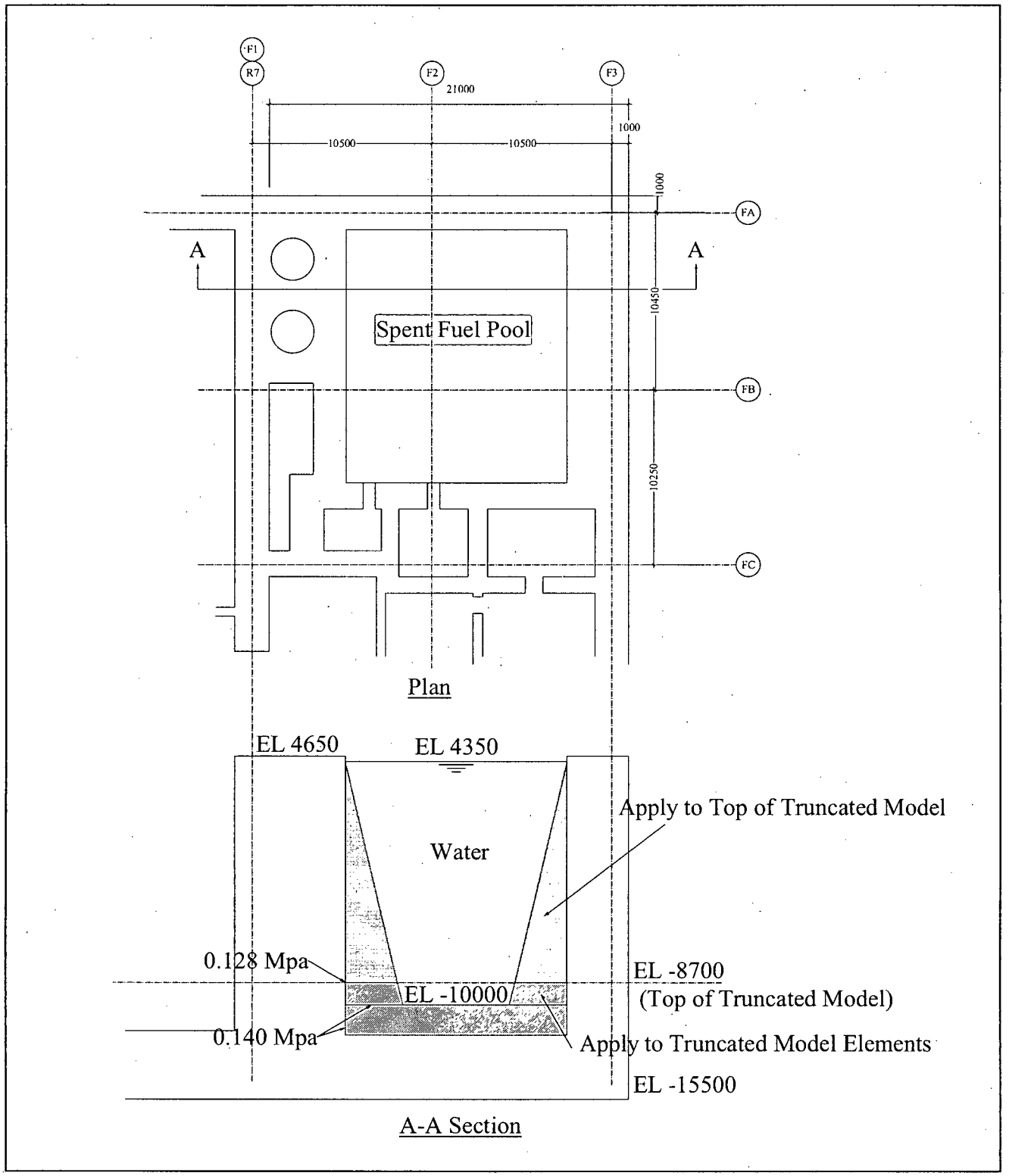

Figure 3-2 Hydrostatic Load Applied to the Spent Fuel Pool Walls and the Basemat

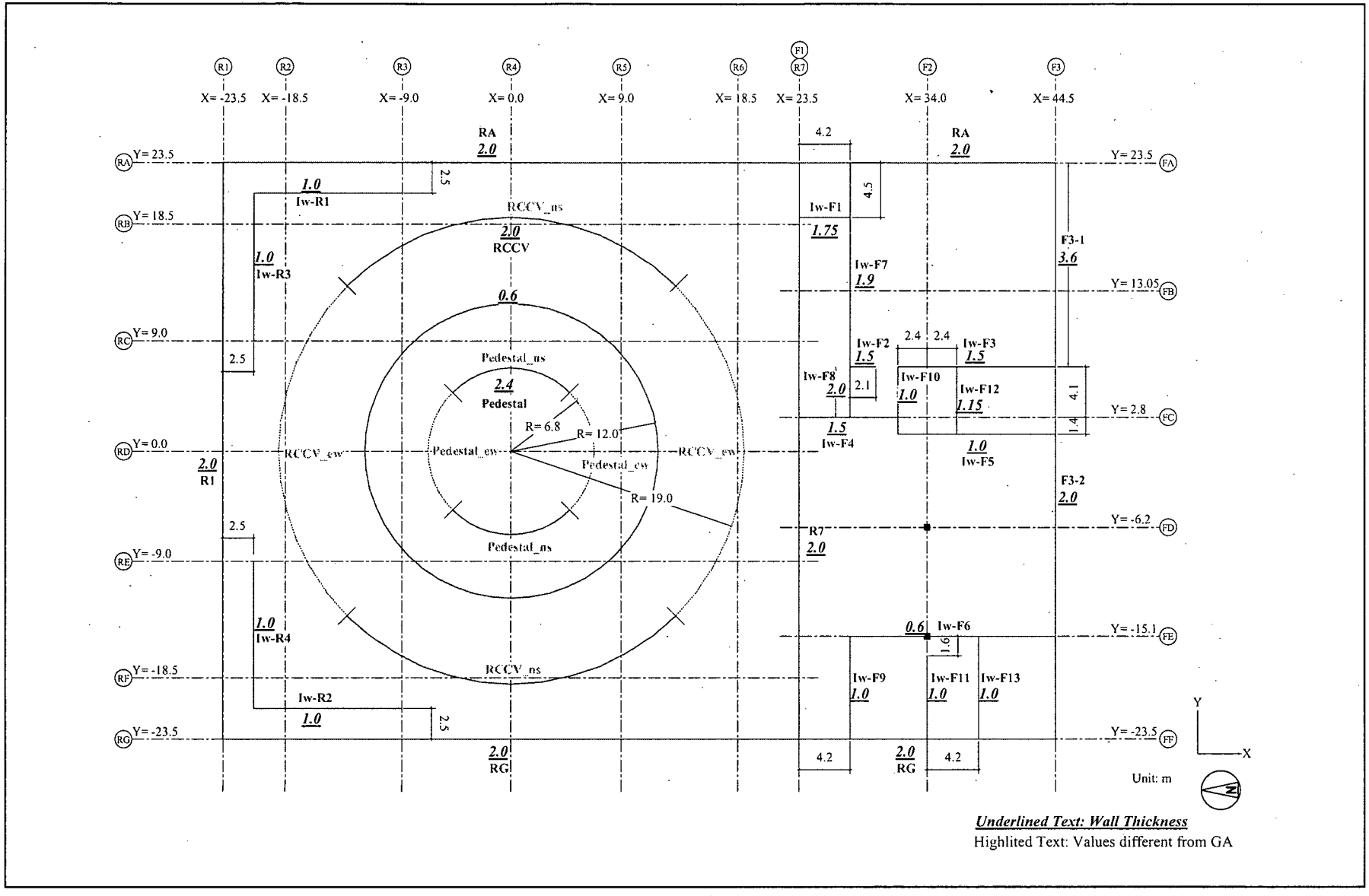

Underlined Text: Wall Thickness

Highlited Text: Values different from GA

Figure 3-3 Wall Information of Truncated Mode