APPENDIX D

REQUIREMENTS RESULTING FROM TMI-2 ACCIDENT

TABLE OF CONTENTS

ITEM		PAGE
	TMI ACTION PLAN REQUIREMENTS FOR APPLICANTS FOR AN OPERATING LICENSE (NUREG-0737 ENCLOSURE 2)	
	Introduction	D-1
I.A.1.1	Shift Technical Advisor	D-2
I.A.1.2	Shift Supervisor Administrative Duties	D-3
I.A.1.3	Shift Manning	D-4
I.A.2.1	Immediate Upgrading of Operator and Senior Operator Training and Qualification	D-5
I.A.2.3	Administration of Training Programs	D-6
I.A.3.1	Revise Scope and Criteria for Licensing Examinations – Simulator Exam (Item 3)	D-7
I.B.1.2	Deleted	D-8
I.C.1	Guidance for the Evaluation and Development of Procedures for Transients and Accidents	D-9
I.C.2	Shift Relief and Turnover Procedures	D-14
I.C.3	Shift Supervisor Responsibilities	D-15
I.C.4	Control Room Access	D-16
I.C.5	Procedures for Feedback of Operating Experience to Plant Staff	D-17
I.C.6	Guidance on Procedures for Verifying Correct Performance of Operating Activities	D-19
I.C.7	NSSS Vendor Review of Procedures	D-20
I.C.8	Pilot Monitoring of Selected Emergency Procedures for Near-Term Operating License Applicants	D-21
I.D.1	Control Room Design	D-22
I.D.2	Plant Safety Parameter Display Console	D-25
I.G.1	Training During Low-Power Testing	D-29
II.B.1	Reactor Coolant System Vents	D-30
II.B.2	Design Review of Plant Shielding and Environmental Qualification of Equipment for Spaces/Systems Which May Be Used in Postaccident Operations	D-34
II.B.3	Postaccident Sampling Capability	D-39
II.B.4	Training for Mitigating Core Damage	D-43
II.D.1	Performance Testing of BWR and PWR Relief and Safety Valves (NUREG-0578, Section 2.1.2)	D-44
II.D.3	Direct Indication of Relief and Safety Valve Position	D-46
II.E.1.1	Auxiliary Feedwater System Evaluation	D-47
II.E.1.2	Auxiliary Feedwater System Automatic Initiation and Flow Indication	D-48
II.E.3.1	Emergency Power Supply for Pressurizer Heaters	D-50
II.E.4.1	Dedicated Hydrogen Penetrations	D-51
II.E.4.2	Containment Isolation Dependability	D-52
II.F.1	Additional Accident-Monitoring Instrumentation	D-57
II.F.2	Inadequate Core Cooling Instruments	D-60

TABLE OF CONTENTS (Cont'd)

ITEM		PAGE
II.G.1	Emergency Power for Pressurizer Equipment	D-62
II.K.1.5	Safety-Related Valve Position	D-63
II.K.1.10	Operability Status	D-64
II.K.1.17	Pressurizer Low-Level Coincident Signal Bistables	D-65
II.K.1.20	Prompt Manual Reactor Trip	D-66
II.K.1.21	Automatic Safety-Grade Anticipatory Reactor Trip	D-67
II.K.1.22	Auxiliary Heat Removal System Procedures	D-68
II.K.1.23	Reactor Vessel Level Instrumentation	D-70
II.K.2.2	Control of Auxiliary Feedwater Independent of the Integrated Control System	D-72
II.K.2.9	Failure Mode Effects Analysis on the Integrated Control System	D-73
II.K.2.10	Safety-Grade Anticipatory Reactor Trip	D-74
II.K.2.13	Thermal Mechanical Report Effect of High-Pressure Injection on Vessel Integrity for Small-Break Loss-of-Coolant Accident with No Auxiliary Feedwater	D-75
II.K.2.14	Demonstrate that Predicted Lift Frequency of Power-Operated Relief Valves is Acceptable	D-76
II.K.2.15	Effects of Slug Flow on Steam Generator Tubes	D-77
II.K.2.16	Reactor Coolant Pump Seal Damage	D-78
II.K.2.17	Potential for Voiding in the Reactor Coolant System During Transients	D-79
II.K.2.19	Sequential Auxiliary Feedwater Flow Analysis	D-80
II.K.3.1	Installation and Testing of Automatic Power-Operated Relief Valve Isolation System	D-81
II.K.3.2	Report on Overall Safety Effect of Power-Operated Relief Valve Isolation System	D-82
II.K.3.3	Reporting Safety and Relief Valve Failures Promptly and Challenges Annually	D-83
II.K.3.5	Automatic Trip of Reactor Coolant Pumps During Loss-of-Coolant Accident	D-84
II.K.3.7	Evaluation of Power-Operated Relief Valve Opening Probability During Overpressure Transient	D-85
II.K.3.9	Proportional Integral Derivative Controller Modification	D-86
II.K.3.10	Proposed Anticipatory Trip Modifications	D-87
II.K.3.11	Justification for Use of Certain Power-Operated Relief Valves	D-88
II.K.3.12	Confirm Existence of Anticipatory Reactor Trip Upon Turbine Trip	D-89
II.K.3.13	Separation of HPCI and RCIC System Initiation Levels	D-90
II.K.3.15	Modify Break Detection Logic to Prevent Spurious Isolation of HPCI and RCIC	D-92
II.K.3.16	Reduction of Challenges and Failures of Relief Valves – Feasibility Study and System Modification	D-93
II.K.3.17	Report on Outages of Emergency Core-Cooling Systems Licensee Report and Proposed Technical Specification Changes	D-96
II.K.3.18	Modification of Automatic Depressurization System Logic – Feasibility for Increased Diversity for Some Event Sequences	D-97
II.K.3.21	Restart of Core Spray and Low-Pressure Coolant-Injection Systems	D-99
II.K.3.22	Automatic Switchover of Reactor Core Isolation Cooling System Suction—Verify Procedures and Modify Design	D-101

TABLE OF CONTENTS (Cont'd)

ITEM		PAGE
II.K.3.24	Confirm Adequacy of Space Cooling for High Pressure Coolant Injection and Reactor Core Isolation Cooling Systems	D-102
II.K.3.25	Effects of Loss of Alternating-Current Power on Pump Seals	D-103
II.K.3.27	Provide Common Reference Level for Vessel Level Instrumentation	D-104
II.K.3.28	Verify Qualification of Accumulators on ADS Valves	D-105
II.K.3.30	Revised Small-Break Loss-of-Coolant-Accident Methods to Show Compliance with 10 CFR Part 50, Appendix K	D-107
II.K.3.31	Plant-Specific Calculations to Show Compliance with 10 CFR Part 50.46	D-108
II.K.3.44	Evaluation of Anticipated Transients with Single Failure to Verify No Fuel Failure	D-109
II.K.3.45	Evaluation of Depressurization with Other than ADS	D-111
II.K.3.46	Michelson Concerns on the Importance of Natural Circulation During a Very Small Break LOCA and Other Related Items	D-112
III.A.1.1	Upgrade Emergency Preparedness	D-113
III.A.1.2	Upgrade Emergency Support Facilities	D-114
III.A.2	Improving Licensee Emergency Preparedness--Long-Term	D-115
III.D.1.1	Integrity of Systems Outside Containment Likely to Contain Radioactive Material	D-116
III.D.3.3	Improved Inplant Iodine Instrumentation Under Accident Conditions	D-119
III.D.3.4	Control-Room Habitability Requirements	D-121
	References	D-122

APPENDIX D

REQUIREMENTS RESULTING FROM TMI-2 ACCIDENT

LIST OF TABLES

NUMBER	TITLE	PAGE
D-1	Radioactive Source Assumptions	D-38
D-2	Essential and Nonessential Systems for the Purpose of Containment Isolation	D-55

APPENDIX D

REQUIREMENTS RESULTING FROM TMI-2 ACCIDENT

LIST OF FIGURES

NUMBER	TITLE
D-1	RCIC Steamline Break Detection Logic Diagram
D-2	Schematic Diagram of Time Delay Action to Preclude Spurious RCIC Isolation During System Start Sequence
D-3	Postaccident Sampling Station Shielding
D-4	Postaccident Radiation Zone Maps of Vital Areas
D-5	ADS Initiation Logic Modification
D-6	Simplified ADS/SRV Solid State Logic-Original Design
D-7	Simplified ADS/SRV Solid State Logic-Modified Design

DRAWINGS CITED IN THIS APPENDIX*

*The listed drawings are included as “General References” only; i.e., refer to the drawings to obtain additional detail or to obtain background information. These drawings are not part of the USAR. They are controlled by the Controlled Documents Program.

DRAWING*	SUBJECT
796E724	Nuclear Boiler System
M01-1505	Radiation Shielding Design - Containment & Diesel Generator Building El 702’-0” & 712’-0”
M05-1070	Main Steam Isolation Valve - Leakage Control System
M05-1072	Reactor Recirculation System
M05-1078	Control Rod Drive System

APPENDIX D

REQUIREMENTS RESULTING FROM TMI-2 ACCIDENT

INTRODUCTION

The investigations and studies associated with the TMI-2 accident produced several documents specifying results and recommendations, which prompted the issuance by the NRC of various bulletins, letters, and NUREGs providing guidance and requiring specific actions by the nuclear power industry. In May 1980, the issuance of NUREG-0660 provided a comprehensive and integrated plan and listing of requirements to correct or improve the regulation and operation of nuclear facilities based on the experience from the accident at TMI-2 and the studies and investigations of the accident. NUREG-0737, issued in November 1980, listed items from NUREG-0660 approved by the NRC for implementation, and included additional information concerning schedules, applicability, method of implementation review, submittal dates, and classification of technical positions.

This Appendix D reports the Clinton Power Station responses to the NRC positions taken regarding the "TMI Action Plan Requirements for Applicants for an Operating License" as referenced in NUREG-0737, Enclosure 2. These responses have developed as the NRC positions have evolved and been clarified by the issuance of subsequent documentation by the NRC.

In general, the responses demonstrate the methods of compliance by Clinton to ensure that the NRC requirements are satisfactorily fulfilled. For each item, a summary of the NRC position is given, followed by a full explanation of the issue as it pertains to Clinton and/or a listing of applicable FSAR sections, relevant correspondence, or other necessary documentation that may be referenced for complete clarification of the Clinton position. Where a particular requirement is not applicable to Clinton, a technical justification is provided in the response.

aCPS has been and continues to be a participant in the BWR Owners' Group program. Several responses to generic issues are based on the results and conclusions of test programs and studies conducted by this organization to specifically address these respective generic items. Generally the response references correspondence associated with the issue under consideration to the NRC from the BWR Owners' Group, which is accompanied by a thorough explanation of the relevance or bearing of the analysis to Clinton.

This Appendix D is essentially complete in that all of the "TMI Action Plan Requirements for Applicants for an Operating License" approved for implementation by the NRC as listed in NUREG-0737, Enclosure 2, have been addressed. Conclusions from the continuing studies and evaluation programs pertaining to TMI issues will be included as a matter of course in this appendix with a complete explanation of their applicability to the Clinton Power Station. As the requirements stemming from the investigations and studies of the TMI-2 accident are further clarified or revised by the NRC, the relevance of such changes as they affect Clinton will be reflected in amendments to this Appendix. In this manner, the Clinton response will be continually maintained up to date as further development by the NRC proceeds in regard to TMI requirements.

NRC ACTION PLAN (NUREG-0660 as clarified by NUREG-0737)

I.A.1.1 Shift Technical Advisor

NRC Position

Each licensee shall provide an on-shift technical advisor to the Shift Manager. The Shift Technical Advisor (STA) may serve more than one unit at a multiunit site if qualified to perform the advisor function for the various units.

The STA shall have a bachelor's degree or equivalent in a scientific or engineering discipline and have received specific training in the response and analysis of the plant for transients and accidents. The STA shall also receive training in plant design and layout, including the capabilities of instrumentation and controls in the control room. The licensee shall assign normal duties to the STAs that pertain to the engineering aspects of assuring safe operations of the plant, including the review and evaluation of operating experience.

CPS Response

The STA program is addressed in USAR Section 13.1.2.1.1.1, Shift Technical Advisor. The process through which the Shift Technical Advisor Training Program is maintained is identified in USAR Section 13.2.2.

NRC ACTION PLAN (NUREG-0660 and listed in NUREG-0737)

I.A.1.2 Shift Supervisor Administrative Duties

NRC Position

Review the administrative duties of the Shift Supervisor and delegate functions that detract from or are subordinate to the management responsibility for assuring safe operation of the plant to other personnel not on duty in the control room.

CPS Response

Clinton Power Station administrative procedures were prepared to ensure that the Shift Manager is relieved of unnecessary administrative duties. Such duties are assigned to other station personnel such as the Operations Supervisor. These procedures will be made available for review by Region III Division of Inspection and Enforcement.

See Section 13.1 for additional information on plant staffing and responsibilities.

NRC ACTION PLAN (NUREG-0660 as clarified by NUREG-0737)

I.A.1.3 Shift Manning

NRC Position

This position defines shift manning requirements for normal operation. The letter of July 31, 1980 from D. G. Eisenhut to all power reactor licensees and applicants sets forth the interim criteria for shift staffing (to be effective pending general criteria that will be the subject of future rulemaking). Overtime restrictions were also included in the July 31, 1980 letter.

CPS Response

Clinton Power Station will typically utilize a five operating shift crew rotation. The minimum operating shift crew will normally consist of two SROs, two ROs and two non-licensed operators. One SRO will be shift manager qualified and one SRO will remain in the main control room area. Staffing requirements and the movement of key individuals about the plant will be addressed in the plant Technical Specifications and the Operational Requirements Manual (ORM).

Overtime limitations for plant personnel are consistent with current NRC requirements. These limitations are addressed in the station administrative procedures and Technical Specifications which are available for review by Region III Division of Inspection and Enforcement.

See Subsection 13.1.2.3 for additional information on shift manning.

NRC ACTION PLAN (NUREG-0660 AS CLARIFIED BY NUREG-0737)

I.A.2.1 Immediate Upgrading of Reactor Operator and Senior Reactor Operator Training and Qualifications

NRC Position

Effective December 1, 1980, an applicant for a senior reactor operator (SRO) license will be required to have been a licensed operator for 1 year.

CPS Response

The Senior Reactor Operator Training Program is a performance-based training program and has been accredited by the National Academy for Nuclear Training. The program is supported by a facility-referenced simulator which has been certified to the Commission.

The experience requirements for a Senior Reactor Operator applicant are contained in the Training Program Description. These requirements were developed using existing regulatory guidelines to ensure that applicants possess adequate experience prior to entering the training program.

I.A.2.3 Administration of Training Programs

NRC Position

Pending accreditation of training institutions, licensees and applicants for operating licenses will assure that training center and facility instructors who teach systems, integrated responses, transient, and simulator courses demonstrate Senior Reactor Operator (SRO) qualifications and be enrolled in appropriate requalification programs.

CPS Response

Members of the Clinton Power Station training staff who teach the subjects listed above in SRO courses have successfully completed the training required for SRO licensing or certification on a GE BWR facility. Staff members who hold or have held a RO license for Clinton Power Station may teach RO courses in the subjects listed above in the classroom setting. These staff members will be required to continue to participate in appropriate retraining or requalification programs as either instructors or students.

SRO qualification will be required for members of other organizations who are used routinely to conduct classes on the above listed subjects. However, CPS does not intend to require guest lecturers who are experts in particular subjects (reactor theory, instrumentation, radwaste systems, thermodynamics, health physics, chemistry, etc.) to successfully complete a senior operator examination. Nor is it intended to require a system expert, who may, for example, teach the control rod drive system, to take a senior operator examination. The use of guest lecturers will be limited.

The Senior Reactor Operator, Reactor Operator and associated continuing training programs have been accredited by the National Academy for Nuclear Training.

NRC ACTION PLAN (NUREG-0660 as clarified by NUREG-0737)

I.A.3.1 Revise Scope and Criteria for Licensing Examinations--Simulator Exams (Item 3)

NRC Position

Simulator examinations will be included as part of the licensing examinations.

CPS Response

Illinois Power Company purchased a plant referenced simulator for training and licensing reactor operators. The simulator will be located on-site in the Simulator/Emergency Operations Facility Building. The simulator will be installed approximately one year prior to fuel load. Until it is operational, training and the simulator testing portion of the examinations for operators and senior operators will be conducted at a suitable BWR training facility.

NRC ACTION PLAN (NUREG-0660 as clarified by NUREG-0737)

I.B.1.2 Independent Safety Engineering Group

This page deleted intentionally.

NRC ACTION PLAN (NUREG-0660 as clarified by NUREG-0737 and Supplement 1 to NUREG-0737)

I.C.1 Guidance for the Evaluation and Development of Procedures for Transients and Accidents (entitled "Upgrade Emergency Operating Procedures (EOP)" in Supplement 1 to NUREG-0737)

NRC Position

The requirements and guidance contained in Supplement 1 to NUREG-0737 replace the corresponding requirements in the original issue of NUREG-0737 for this Action Plan item. Section 7 of Supplement 1 to NUREG-0737 provides these requirements:

7.1 Requirements

a. The use of human factored, function oriented, emergency operating procedures will improve human reliability and the ability to mitigate the consequences of a broad range of initiating events and subsequent multiple failures or operator errors, without the need to diagnose specific events.

b. In accordance with NUREG-0737, Item I.C.1, reanalyze transients and accidents and prepare Technical Guidelines. These analyses will identify operator tasks, and information and control needs. The analyses also serve as the basis for integrating upgraded emergency operating procedures and the control room design review and verifying the SPDS design.

c. Upgrade EOPs to be consistent with Technical Guidelines and an appropriate procedure Writer's Guide.

d. Provide appropriate training of operating personnel on the use of upgraded EOPs prior to implementation of the EOPs.

e. Implement upgraded EOPs.

7.2 Documentation and NRC Review

a. Submit Technical Guidelines to NRC for review. NRC will perform a pre-implementation review of the Technical Guidelines. Within two months of receipt of the Technical Guidelines, NRC will advise the licensees of their acceptability.

b. Each licensee shall submit to NRC a procedures generation package at least three months prior to the date it plans to begin formal operator training on the upgraded procedures.

NRC approval of the submittal is not necessary prior to upgrading and implementing the EOPs. The procedures generation package shall include:

(i) Plant-Specific Technical Guidelines -- plant-specific guidelines for plants not using generic technical guidelines, a description of the planned method for developing plant specific EOPs from the generic guidelines, including plant specific information.

(ii) A Writer's Guide that details the specific methods to be used by the licensee in preparing EOPs based on the Technical Guidelines.

(iii) A description of the program for validation of EOPs.

(iv) A brief description of the training program for the upgraded EOPs.

c. All procedures generation packages will be reviewed by the staff. On an audit basis for selected facilities, upgraded EOPs will be reviewed. The details and extent of this review will be based on the quality of the procedures generation packages submitted to NRC. A sampling of upgraded EOPs will be reviewed for technical adequacy in conjunction with the NRC Reactor Inspection Program.

CPS Response

Clinton Power Station's (CPS) program for implementing these requirements is included as a part of the CPS Emergency Response Capability Implementation Plan (ERCIP). The ERCIP program was submitted to the NRC staff on April 13, 1983 and is noted in Reference 27.

7.1.a IP will utilize human factored, function-oriented, emergency operating procedures (EOPs) at the Clinton Power Station. These EOPs will improve operator reliability and the ability to mitigate the consequences of a broad range of initiating events (transients and USAR Chapter 15 accidents, small-break LOCAs, events with potential inadequate core cooling, ATWS, multiple failures/inappropriate operator actions) without the need to diagnose specific events.

7.1.b In the clarification of the NUREG-0737 requirement "for reanalysis of transients and accidents and inadequate core cooling and preparation of guidelines for development of emergency procedures," NUREG-0737 states:

> "Owners' group or vendor submittals may be referenced as appropriate to support this reanalysis. If owners' group or vendor submittals have already been forwarded to the staff for review, a brief description of the submittals and justification of their adequacy to support guideline development is all that is required."

CPS has participated, and will continue to participate, in the BWR Owners' Group program to develop emergency procedure guidelines (EPG) for General Electric BWRs. Following is a brief description of the submittals to date, and a justification of their adequacy to support guideline development.

Description of Submittals

1. NEDO-24708, "Additional Information Required for NRC Staff Generic Report on Boiling Water Reactors," August 1979.

2. NEDO-24708A, Revision 1, "Additional Information Required for NRC Staff Generic Report on Boiling Water Reactors," December 1980. This report was issued via the letter from D. B. Waters (BWR Owners' Group) to D. G. Eisenhut (NRC) dated March 20, 1981.

3. BWR Emergency Procedure Guidelines (Revision 0 prepublication form) issued via letter from H. R. Buchholz (GE) to D. G. Eisenhut (NRC) dated June 30, 1980.

4. BWR Emergency Procedure Guidelines (Revision 1 expanded Revision 0 to include BWR/6 MK III) - Issued via the letter from D. B. Waters (BWR Owners' Group) to D. G. Eisenhut (NRC) dated January 31, 1981.

5. BWR Emergency Procedure Guidelines (Update of Revision 1 to reflect results of further analysis and the experience gained during trial implementation) - Issued via the letter from T. J. Dente (BWR Owners' Group) to D. G. Eisenhut (NRC) dated September 8, 1981.

6. BWR Emergency Procedure Guidelines (Revision 2 - expands Revision 1 to include the Reactivity Control Guideline for Anticipated Transients Without Scram) - Issued via the letter from T. J. Dente (BWR Owner's Group) to D. G. Eisenhut (NRC) dated June 1, 1982.

7. BWR Emergency Procedure Guidelines (Revision 3 expands Revision 2 to include the Secondary Containment. Control and Radioactivity Release Control Guidelines) - Issued via the letter from T. J. Dente (BWR Owner's Group) to D. G. Eisenhut (NRC) dated December 22, 1982.

8. BWR Emergency Procedure Guidelines (Revision 4 - combination of all emergency actions into four symptom based guidelines, six contingencies and seven cautions). Issued March 1987 as NEDO-3133 with NRC SER completed on September 12, 1988.

9. Mark III Combustible Gas Control Emergency Procedure Guidelines (Revision 3 - Initial guidance for Mark III containment hydrogen control). Issued via the letter from J. R. Langley (Hydrogen Control Owner's Group) to R. Bernero (NRC) dated July 8, 1988.

10. BWR Emergency Procedure and Severe Accident Guidelines (Revision 1 - incorporates MARK III Combustible Gas Control Emergency Procedure Guidelines, Rev. 3; ATWS Reactor Core Instabilities changes with NRC SER completed on June 6, 1996; and industry initiative closure of NUREG-0737 Item I.C.1 and Nuclear Energy Institute (NEI) 91-04, Severe Accident Issue Closure Guidelines.) Issued via BWROG Emergency Procedure Committee dated July 12, 1997. NRC review dated July 20, 1998 (no SER provided).

Adequacy of Submittals

The submittals described above have been discussed and reviewed extensively among the BWR Owners' Group, the General Electric Company, and the NRC staff. The NRC Staff has found (NUREG-0737, Page I.C.1-3) that "the analysis and guidelines submitted by the General Electric Company (GE) owners' group...comply with the requirements (of the NUREG-0737 clarifications)."

In Reference 26, the Director of the Division of Licensing states "the NRC staff...has found the Emergency Procedure Guidelines to be acceptable for implementation."

The following statement is historical: Operator walkthroughs of the upgraded CPS EOPs will assist in the control room design review and verifying the SPDS design.

EPG calculations as defined in BWR EPGs, Revision 4, Appendix C, have been performed to aid in the determination of additional CPS instrumentation needs.

7.1.c The development of CPS plant-specific EPGs included the preparation of the technical bases for each EPG action step and operator action flow charts. A Writer's Guide has been formulated that details the specific methods to be used by CPS Staff in preparing EOPs and Severe Accident Guidelines (SAG) based upon these technical guidelines. Preparation of CPS EOP/SAGs has been based upon a review of the BWR generic EPGs. The EOP/SAGs for CPS were written from the plant-specific EPGs.

7.1.d Input from the EOP/SAGs development was used to establish an operator training program which consisted of the following basic components:

(1) Classroom lesson plans and training;

(2) Control room walkthroughs - operator task analysis;

(3) Simulator exercises.

During training, the plant operators were encouraged to offer recommendations about how the EOP/SAGs might be improved. Training in the use of Emergency Procedures is also addressed in Action Plan Item II.B.4.

7.1.e An EOP/SAGs Validation & Verification (V&V) program was established. The V&V program consists of the following:

(1) Simulator exercises;

(2) Control room walkthroughs - operator task analysis;

(3) Desk-top reviews;

(4) A check to ensure that the procedures and the control room/plant hardware correspond, i.e., control equipment and indications referenced are available and use the same designation, use the same units of measurement and operate as specified in the procedures;

(5) Verification that there is a high level of assurance that the procedures will work, i.e., the EOP/SAGs guide the operator in mitigating transients and accidents. A human factors review and walkthrough of the EOP/SAGs will be conducted to verify that the procedures are functional.

IP corrected the discrepancies discovered during the V&V process by making appropriate changes to the control room, procedures, training, or some combination of these. All requirements regarding the upgrading of CPS EOPs were implemented prior to fuel load, although revisions will be made as required.

7.2.a The NRC Staff has conducted reviews of the BWR generic EPGs up through Revision 4, including ATWS Reactor Core Instabilities (in EPG/SAG Rev. 1).

7.2.b Three months prior to commencing formal operator training on the upgraded EOPs, IP submitted a Procedures Generation Package (PGP) to the NRC Staff. The CPS PGP contained the following items:

(1) CPS plant-specific EPGs (Technical Guidelines);

(2) CPS operator action steps' technical bases; justification of any CPS exceptions to the BWR generic EPGs will be provided;

(3) CPS plant-specific Writer's Guide;

(4) Description of the CPS EOP V&V Program;

(5) Basic description of the CPS Operator EOP Training Program.

The results of the SER issued by the staff, following their review of the CPS PGP, were factored into additional upgrading of the EOPs and the operator training program, where appropriate.

7.2.c The CPS SER, NUREG-0853, Section 13.6.3 states "the staff does not plan to conduct a pilot monitoring review of selected emergency operating procedures in accordance with TMI Task Action Plan I.C.8 for Clinton." In any case, the CPS upgraded EOPs were made available for review by Region III Division of Inspection and Enforcement.

NRC ACTION PLAN (NUREG-0660 and listed in NUREG-0737)

I.C.2 Shift Relief and Turnover Procedures

NRC Position*

The licensees shall review and revise as necessary the plant procedure for shift and relief turnover to assure the following:

a. A checklist shall be, provided for the oncoming and offgoing Control Room Operators, the oncoming Shift Manager and Operations Supervisor to complete and sign. The following items, as a minimum, shall be included in the checklist.

   1. Assurance that critical plant parameters are within allowable limits (parameters and allowable limits shall be listed on the checklist).

   2. Assurance of the availability and proper alignment of all systems essential to the prevention and mitigation of operational transients and accidents by a check of the control console (what to check and criteria for acceptable status shall be included on the checklist).

   3. Identification of systems and components that are in a degraded mode of operation permitted by the Technical Specifications. For such systems and components, the length of time in the degraded mode shall be compared with the Technical Specifications action statement (this shall be recorded as a separate entry on the checklist).

b. Checklist or logs shall be provided for completion by the offgoing and ongoing auxiliary operators and technicians. Such checklists or logs shall include any equipment under maintenance or test that by themselves could degrade a system critical to the prevention and mitigation of operational transients and accidents or initiate an operational transient (what to check and criteria for acceptable status shall be included on the checklist); and

*This "Position" is taken from D. B. Vassallo's letter dated 11/9/79 to all licensees of plants under construction since it was not provided in detail in either NUREG-0660 or NUREG-0737.

c. A system shall be established to evaluate the effectiveness of the shift and relief turnover procedure (for example, periodic independent verification of system alignments).

CPS Response

Clinton Power Station Administrative Procedures were prepared to ensure that the above requirements are satisfied.

CPS Administrative Procedures ensure that I.C.2 is met by requiring the Control Room Operator (CRO), the Shift Manager, and Operations Supervisor review and sign the shift relief and turnover checklists so that adequate knowledge of critical plant parameter status, system status, system availability and off-normal system alignments are known.

NRC ACTION PLAN (NUREG-0694 and listed in NUREG-0737)

I.C.3 Shift Supervisor Responsibilities

NRC Position

Issue a corporate management directive that clearly establishes the command duties of the shift supervisor and emphasizes the primary management responsibility for safe operation of the plant. Revise plant procedures to clearly define the duties, responsibilities and authority of the shift supervisor and the control room operators.

CPS Response

Nuclear Policy Statement No. 7 from the Vice President/Chief Nuclear Officer to the Shift Manager provides management direction to the Shift Manager, emphasizing his responsibility for safe operation of the plant.

Clinton Power Station Administrative Procedures define the duties, responsibilities, and authorities of the shift manager and other shift personnel. Emphasis has been placed on relieving the shift manager of administrative burdens in order that he may concentrate on his primary management responsibility for the safe operation of the plant.

These procedures are available for review by Region III Division of Inspection and Enforcement.

NRC ACTION PLAN (NUREG-0660 and listed in NUREG-0737)

I.C.4 Control Room Access

NRC Position*

The licensee shall make provisions for limiting access to the control room to those individuals responsible for the direct operation of the nuclear power plant (e.g., operations supervisor, shift supervisor, and control room operators), to technical advisors who may be requested or required to support the operation, and to predesignated NRC personnel. Provisions shall include the following:

1. Develop and implement an administrative procedure that establishes the authority and responsibility of the person in charge of the control room to limit access, and

2. Develop and implement procedures that establish a clear line of authority and responsibility in the control room in the event of an emergency. The line of succession for the person in charge of the control room shall be established and limited to persons possessing a current senior reactor operator's license. The plan shall clearly define the lines of communication and authority for plant management personnel not in direct command of operations, including those who report to stations outside of the control room.

CPS Response

Clinton Power Station Administrative Procedures were prepared to ensure that access to the main control room is limited to those individuals who have a need to be there.

These procedures also establish a line of authority and the responsibility of the SRO in charge of the control room to limit access under normal and emergency operating conditions.

*This "Position" is taken from D. B. Vassallo's letter dated 11/9/79 to all licensees of plants under construction since it is not provided in detail in either NUREG-0660 or NUREG-0737.

NRC ACTION PLAN (NUREG-0660 as clarified by NUREG-0737)

I.C.5 Procedures for Feedback of Operating Experience to Plant Staff

NRC Position

In accordance with Task Action Plan I.C.5, "Procedures for Feedback of Operating Experience to Plant Staff" (NUREG-0660), each applicant for an operating license shall prepare procedures to assure that operating information pertinent to plant safety originating both within and outside the utility organization is continually supplied to operators and other personnel and is incorporated into training and retraining programs. These procedures shall:

1. Clearly identify organizational responsibilities for review of operating experience, the feedback of pertinent information to operators and other personnel, and the incorporation of such information into training and retraining programs;

2. Identify the administrative and technical review steps necessary in translating operating experience recommendations into plant actions (e.g., changes to procedures; operating orders);

3. Identify the recipients of various categories of information from operating experience (i.e., supervisory personnel, shift technical advisors, operators, maintenance personnel, health physics technicians) or otherwise provide means through which such information can be readily related to the job functions of the recipients;

4. Provide means to assure that affected personnel become aware of and understand information of sufficient importance that should not wait for emphasis through routine training and retraining programs;

5. Assure that plant personnel do not routinely receive extraneous and unimportant information on operating experience in such volume that it would obscure priority information or otherwise detract from overall job performance and proficiency;

6. Provide suitable checks to assure that conflicting or contradictory information is not conveyed to operators and other personnel until resolution is reached; and,

7. Provide periodic internal audits to assure that the feedback program functions effectively at all levels.

CPS Response

The Director - Licensing reports to the Manager - Clinton Power Station and has the overall responsibility for coordinating reviews of industry and in-house operating experience information. Typical sources of operating information include NRC documents, INPO documents, Vendor documents, and Architect Engineer information. The program will be performed by the Licensing Department personnel using the Corrective Action and other approved site tracking programs.

The site maintains procedures which identify CPS department responsibilities for the operating experience program. These responsibilities include reviewing the information and implementing appropriate corrective actions or recommendations identified in industry operating experience information.

Program effectiveness reviews are performed periodically to assure recommendations and corrective actions have been incorporated as appropriate.

NRC ACTION PLAN (NUREG-0660 as clarified by NUREG-0737)

I.C.6 Guidance on Procedures for Verifying Correct Performance of Operating Activities

NRC Position

It is required (from NUREG-0660) that licensees' procedures be reviewed and revised, as necessary, to assure that an effective system of verifying the correct performance of operating activities is provided as a means of reducing human errors and improving the quality of normal operations. This will reduce the frequency of occurrence of situations that could result in or contribute to accidents. Such a verification system may include automatic system status monitoring, human verification of operations and maintenance activities independent of the people performing the activity (see NUREG-0585, Recommendation 5), or both.

Implementation of automatic status monitoring if required will reduce the extent of human verification of operations and maintenance activities but will not eliminate the need for such verification in all instances. The procedures adopted by the licensees may consist of two phases -- one before and one after installation of automatic status monitoring equipment, if required, in accordance with Item I.D.3.

CPS Response

Clinton Power Station is equipped with status monitoring that satisfies the requirements of Regulatory Guide 1.47. In addition to the status monitoring, Clinton Power Station Administrative Procedures assure that independent verification of safety system line-ups is applied to valve and electrical line-ups for all equipment important to safety, to surveillance procedures, and to restoration following maintenance. The following are exceptions to Independent Verification, Concurrent Verification is required for: THROTTLED valves with a pre-determined valve position, Bus Metering and Potential Fuses. Non-safety systems receive an alternative method of verification. Through these procedures, the Shift Manager's approval is required for the performance of surveillance test and maintenance, including equipment removal-from-service and return-to-service.

The above referenced procedures are available for review by Region III Division of Inspection and Enforcement.

See Subsections 7.1.2 and 8.1.6 for additional information on status monitoring.

NRC ACTION PLAN (NUREG-0660 as clarified by NUREG-0737)

I.C.7 NSSS Vendor Review of Procedures

NRC Position

Operating license applicants are required to obtain reactor vendor review of their low-power, power-ascension and emergency procedures as a further verification of the adequacy of the procedures.

CPS Response

Low power test and power acension test reviews will be completed by the NSSS vendor, General Electric (GE), prior to implementing these procedures. GE is required to sign approval of these tests in accordance with the Clinton Power Station Startup Manual.

Emergency procedures have been reviewed by the NSSS vendor.

NRC ACTION PLAN (NUREG-0694 and listed in NUREG-0737)

I.C.8 Pilot Monitoring of Selected Emergency Procedures for Near-Term Operating License Applicants

NRC Position

Correct emergency procedures, as necessary, based on the NRC audit of selected plant emergency operating procedures (e.g., small-break LOCA, loss of feedwater, restart of engineered safety features following a loss of ac power, steam-line break, or steam-generator tube rupture).

CPS Response

This paragraph is historical: Illinois Power Company will continue to participate in the BWR Owners' Group program to develop emergency procedure guidelines for General Electric Boiling Water Reactors. Once these guidelines are converted into emergency procedures for CPS and audited by the NRC, Illinois Power Company will revise them, as necessary, before full power operation.

NRC ACTION PLAN (NUREG-0660 as clarified by NUREG-0737 Supplement #1)

I.D.1 Detailed Control Room Design Review

NRC Position

The requirements of Task Action Plan Item I.D.1 have been addressed as part of the NRC Staff's position on Emergency Response Capability initiatives. Section 5 of NUREG-0737, Supplement #1 states the requirements as follows:

5.1 Requirements

a. The objective of the control room design review is to “improve the ability of nuclear power plant control room operators to prevent accidents or cope with accidents if they occur by improving the information provided to them” (from NUREG-0660, Item I.D.1). As a complement to improvements of plant operating staff capabilities in response to transients and other abnormal conditions that will result from implementation of the SPDS and from upgraded emergency operating procedures, this design review will identify any modifications of control room configurations that would contribute to a significant reduction of risk and enhancement in the safety of operation. Decisions to modify the control room would include consideration of long-term risk reduction and any potential temporary decline in safety after modifications resulting from the need to relearn maintenance and operating procedures. This should be carefully reviewed by persons competent in human factors engineering and risk analysis.

b. Conduct a control room design review to identify human engineering discrepancies. The review shall consists of:

(i) The establishment of a qualified multidisciplinary review team and a review program incorporating accepted human engineering principles.

(ii) The use of function and task analysis (that had been used as the basis for developing emergency operating procedures Technical Guidelines and plant specific emergency operating procedures) to identify control room operator tasks and information and control requirements during emergency operations. This analysis has multiple purposes and should also serve as the basis for developing training and staffing needs and verifying SPDS parameters.

(iii) A comparison of the display and control requirements with a control room inventory to identify missing displays and controls.

(iv) A control room survey to identify deviations from accepted human factors principles. This survey will include, among other things, an assessment of the control room layout, the usefulness of audible and visual alarm systems, the information recording and recall capability, and the control room environment.

c. Assess which human engineering discrepancies aresignificant and should be corrected. Select design improvements that will correct those discrepancies. Improvements that can be accomplished with an enhancement program (paint-tape-label) should be done promptly.

d. Verify that each selected design improvement will provide the necessary correction, and can be introduced in the control room without creating any unacceptable human engineering discrepancies because of significant contribution to increased risk, unreviewed safety questions, or situations in which a temporary reduction in safety could occur. Improvements that are introduced should be coordinated with changes resulting from other improvement programs such as SPDS, operator training, new instrumentation (Reg. Guide 1.97, Rev. 3), and upgraded emergency operating procedures.

5.2 Documentation and NRC Review

a. All licensees shall submit a program plan within two months of the start of the control room review. The staff will review the program plans as licensees conduct their reviews, and selected licensee (SIC) will undergo an in-progress audit by the NRR human factors staff based on the program plans and advice from resident inspectors and Project Managers.

b. All licensees shall submit a summary report of the completed review outlining proposed control room changes, including their proposed schedules for implementation. The report will also provide a summary justification for human engineering discrepancies with safety significance to be left uncorrected or partially corrected.

CPS Response

5.1.a: A Preliminary Design Assessment (PDA) has been conducted of the Main Control Room (MCR) by General Physics Corporation. The systems and items that were not installed at the time of the PDA were reviewed during the DCRDR. The NRC Staff has performed a control room design review audit (CRDR/A) following the General Physics review. The human engineering deficiencies (HED) from the PDA are in the process of being corrected or addressed. Resolutions to the HEDs have been accepted by the NRC in Section 18 of the Clinton Power Station (CPS) Safety Evaluation Report (SER) (NUREG-0853). The PDA included those systems and items in the main control room that were installed at the time of the review. The outstanding systems and items that were not reviewed during the PDA are listed in Section 18 of the CPS SER. These systems and items were reviewed during the CPS Detailed Control Room Design Review (DCRDR). The results of this review, proposed corrective actions and schedule for implementing the corrections, were submitted to the NRC staff in the Summary Report in September 1985. Subsequently, the NRC issued a final SER on DCRDR, “Safety Evaluation by the Office of Nuclear Reactor Regulation Related to the Detailed Control Room Design Review.”

5.1.b: The CPS Detailed Control Room Design Review was performed to meet the requirements of Supplement 1 to NUREG-0737 Section 5. NUREG-0700, Guidelines for Control Room Design Reviews, was the primary guidance document for the DCRDR.

5.1.c: The results of the DCRDR were evaluated for significant human factors engineering discrepancies that required correction. The schedule for correcting the human engineering discrepancies identified as a result of the DCRDR was given in the DCRDR Summary Report and the DCRDR Supplemental Summary Report.

5.1.d: Each design improvement was reviewed to ensure that individually and collectively the improvement corrected the human engineering deficiency and did not create other safety problems. Included with the completion of the review of the outstanding items from the PDA, a review of Emergency Operating Procedures and the modifications to the MCR due to other emergency response capability initiatives such as the Safety Parameter Display System (SPDS) and the installation of Regulatory Guide 1.97 (Rev. 3) instrumentation was conducted as part of the DCRDR.

5.2.a: The Program Plan for the CPS Detailed Control Room Design Review was submitted to the NRC in September 1984.

5.2.b: The DCRDR Summary Report was submitted to the NRC in September 1985. The DCRDR Final Report was submitted to the NRC on July 17, 1987 to address NRC staff concerns raised during the NRC staff DCRDR preimplementation audit at CPS in October 1985.

NRC ACTION PLAN (NUREG-0660 as clarified by Supplement 1 to NUREG-0737)

NOTE: Treat this section as historical information and refer to USAR Chapter 7, Sections 7.7.1.26 and 7.7.2.26, Safety Parameter Display System.

I.D.2 Plant Safety Parameter Display Console

NRC Position

The requirements of Task Action Plan Item I.D.2 have been addressed as part of the NRC Staff's position on Emergency Response Capability initiatives. Section 4 of Supplement 1 to NUREG-0737 states the requirements as follows:

4.1 Requirements

a. The SPDS should provide a concise display of critical plant variables to the Control Room operators to aid them in rapidly and reliably determining the safety status of the plant. Although the SPDS will be operated during normal operations as well as during abnormal conditions, the principal purpose and function of the SPDS is to aid the Control Room personnel during abnormal and emergency conditions in determining the safety status of the plant and in assessing whether abnormal conditions warrant corrective action by operators to avoid a degraded core. This can be particularly important during anticipated transients and the initial phase of an accident.

b. Each operating reactor shall be provided with a Safety Parameter Display System that is located convenient to the Control Room Operators. This system will continuously display information from which the plant safety status can be readily and reliably assessed by Control Room personnel who are responsible for the avoidance of degraded and damaged core events.

c. The Control Room instrumentation required (see General Design Criteria 13 and 19 of Appendix A to 10 CFR 50) provides the operators with the information necessary for safe reactor operation under normal, transient, and accident conditions. The SPDS is used in addition to the basic components and serves to aid and augment these components. Thus, requirements applicable to Control Room instrumentation are not needed for this augmentation (e.g., GDC 2, 3, 4 in Appendix A; 10 CFR part 100; single-failure requirements). The SPDS need not meet requirements of the single-failure criteria and it need not be qualified to meet Class 1E requirements. The SPDS shall be suitably isolated from electrical or electronic interference with equipment and sensors that are in use for safety systems. The SPDS need not be seismically qualified, and additional seismically qualified indication is not required for the sole purpose of being a backup for SPDS. Procedures which describe the timely and correct safety status assessment when the SPDS is and is not available will be developed by the licensee in parallel with the SPDS. Furthermore, operators should be trained to respond to accident conditions both with and without the SPDS available.

d. There is a wide range of useful information that can be provided by various systems. This information is reflected in such staff documents as NUREG-0696,

NUREG-0835, and Regulatory Guide 1.97. Prompt implementation of an SPDS can provide an important contribution to plant safety. The selection of specific information that should be provided for a particular plant shall be based on engineering judgment of individual plant licensees, taking into account the importance of prompt implementation.

e. The SPDS display shall be designed to incorporate accepted human factors principles so that the displayed information can be readily perceived and comprehended by SPDS users.

f. The minimum information to be provided shall be sufficient to provide information to plant operators about:

1. Reactivity control

2. Reactor core cooling and heat removal from the primary system

3. Reactor coolant system integrity

4. Radioactivity control

5. Containment conditions

The specific parameters to be displayed shall be determined by the licensee.

CPS RESPONSE

4.1.a The CPS Safety Parameter Display System (SPDS) provides a concise display of critical plant variables [categorized according to Critical Safety Functions (CSFs)] to the Main Control Room (MCR) operators to aid them in rapidly reliably assessing the safety status of the plant. The variables monitored by the CPS SPDS provide information symptomatic of normal, abnormal and emergency conditions consistent with Chapter 15 and the Emergency Operating Procedures (EOPs). Details on the SPDS were sent to the Staff via letter to the Director of Nuclear Reactor Regulation from F. A. Spangenberg, Director of Nuclear Licensing and Configuration, dated April 11, 1985.

4.1.b The CPS SPDS has been implemented as part of the Plant Process Computer System, which is an integral part of the NUCLENET (Principal Plant Console) control room design. The SPDS display is available on the Number 5 display; the location of the SPDS display is such that the control room operators will have unrestricted physical access. The implementation of SPDS has been reviewed using the same human factors criteria applicable to Control Room design reviews.

4.1.c The Control Room instrumentation required provides the operators with the information necessary for safe reactor operation under normal transient, and accident conditions. The SPDS is used in addition to the basic components and serves to aid and augment these components, thus, the SPDS is not designed to Class 1E or Seismic I criteria. A digital and analog signal optical isolation system protects safety systems from electrical interference that may be generated by the SPDS. Protective measures include differential inputs, high impedance amplifier inputs, steel cabinet shielding and shielded 1E output cables to eliminate common mode electrostatic coupling and crosstalk

problems. The SPDS design basis is an information system to the operator. All operator actions are based on the control room hard-wired instrumentation, plant operating procedures, and training knowledge. The loss of the SPDS function would not impair the operator's ability to maintain plant control under all conditions since plant operating procedures (i.e., EOPs, EPGs) have been developed specifically for maintaining plant control. Furthermore, EOPs and EPGs have been developed to cope with plant operations without SPDS, since these procedures are symptom-based.

4.1.d The selection of specific information which is provided on SPDS is based on engineering judgment of individual plant licensees, taking into account the importance of prompt implementation. Additional information is provided in response to requirement 4.1.f.

4.1.e The SPDS display has been designed to incorporate human factors principles using NUREG-0700 criteria and operator feedback. A Dynamic Simulation Test (DST) performed on the CPS SPDS, as programmed on the Simulator, indicated that human factor engineering principles designed into the SPDS were accepted by the operators with no major discrepancies noted. The results of the DST were transmitted to the Staff via letter from F. A. Spangenberg, Director - Nuclear Licensing, to the Director of Nuclear Reactor Regulation, dated September 13, 1985.

4.1.f The original SPDS Design Parameter Set was developed by CPS Operations Staff personnel using the Emergency Operating Procedures and industry guidance documents available at that time. These parameters were subsequently reviewed by the CPS SPDS Verification and Validation (V&V) Team. The V&V review was documented in the "SPDS Parameter Set Validation Report" provided to the NRC as part of the Preimplementation Package. A reevaluation of the CPS SPDS parameter set was considered appropriate as a result of the December 1984 Design Verification Audit performed by the NRC Staff and Science Applications International Corporation (SAIC); the reevaluation was performed in January/February 1985 as part of the SPDS Corrective Action Plan. This reevaluation included the following:

1. Parameter Set Task Force - this task force reviewed the existing SPDS parameter set for consistency with the CPS Emergency Procedure Guidelines (EPGs) and Emergency Operating Procedures (EOPs), NSAC/21, Regulatory Guide 1.97, Rev. 3, and the CPS Emergency Plan Emergency Action Level Initiating Conditions. The methodology used and the results were documented in a report "SPDS Recommended Parameter Set," as provided to the NRC, via IP letter dated April 11, 1985 from F. A. Spangenberg (IPC) to the Director of Nuclear Reactor Regulation.

   The specific parameter set for SPDS display includes parameters to monitor the following functions in all plant conditions:

   a. reactivity control

   b. reactor core cooling and heat removal from the primary system

   c. reactor coolant system integrity

d. radioactivity control

e. containment conditions

2 Operator Integrated SPDS/EOP Walkthroughs - the purpose of the walkthroughs of selected accident scenarios using static displays on the plant simulator was to evaluate the understandability and compatibility of the SPDS displays to assist the operator in monitoring the Critical Safety Function parameters, the procedure, methodology, and results of these walkthroughs were documented in the report. Evaluation of SPDS were made using the Emergency Operating Procedures in Selected Accident Scenario Walkthroughs.

3 Operator Questionnaires - Questionnaires were used to provide operator feedback in the design development. The results of the questionnaires were used to assign priority to the various parameters and to evaluate the preliminary SPDS design. The results of these questionnaires were documented in the "SPDS Questionnaires 1 and 2 Analysis Report."

4. The SPDS displays were subjected to several Human Factors reviews using NUREG-0700 criteria and operator feedback.

5. The V&V Team reviewed the results of the Corrective Action Plan efforts and found that the evaluations performed confirmed the adequacy of the SPDS display/parameter set.

6. An independent design review was performed to determine if the overall SPDS design objectives were met by the results of the SPDS Corrective Action Plan. This review concluded that the design objectives had been met and it is documented in the "SPDS Design Review Team Report."

The Dynamic Simulation Test on the SPDS indicated that the overall response, capability, response timing, and use of EOPs were enhanced for those accident scenarios in which the SPDS was available. The results of the DST were transmitted to the NRC via letter to the Director of Nuclear Reactor Regulation from F. A. Spangenberg, Director of Nuclear Licensing, dated September 13, 1985.

NRC ACTION PLAN (NUREG-0694 and listed in NUREG-0737)

I.G.1 Training During Low-Power Testing

NRC Position

Supplement operator training by completing the special lowpower test program. Tests may be observed by other shifts or repeated on other shifts to provide training to the operators.

CPS Response

A Low-Power Test Training Program has been developed by Illinois Power Company, and was submitted to the NRC in a letter from F. A. Spangenberg, IPC, to W. R. Butler, NRC, dated August 28, 1985. The program was developed using the guidelines in the report "BWR Owners' Group Program for Compliance with NUREG-0737, Item I.G.1, Training During Low Power Testing" transmitted to the NRC via a letter to D. G. Eisenhut, Director of Licensing, from D. B. Waters, Chairman-BWR Owners' Group, dated February 4, 1981. Each licensed operations person will participate in this training during the initial test program.

In an October 27, 1981 letter from R. L. Tedesco, NRC, to G. E. Wuller, IPC, Illinois Power was requested to perform a simulated loss of all ac power (Station Blackout) test at Clinton following an acceptable safety evaluation of the test plan. In NRC Generic letter 83-24, dated June 29, 1983, the NRC staff stated that "if it can be demonstrated that temperature and/or other SBO test conditions would adversely impact and pose a hazard to plant equipment, the BWR Owner's Group recommendation by themselves would constitute compliance with Item I.G.1." Illinois Power Company has evaluated performing a Station Blackout Test in the "Clinton Power Station, Station Blackout Evaluation Report," which has been submitted to the NRC in the August 28, 1985 letter from F. A. Spangenberg, IPC, to W. R. Butler, NRC. This report demonstrates an adverse impact from the Station Blackout test and, thus, indicates deficiencies the test would have in accurately duplicating a station blackout event. Therefore, a station blackout test was not performed at Clinton Power Station.

NRC ACTION PLAN (NUREG-0660 as clarified by NUREG-0737)

II.B.1 Reactor Coolant System Vents

NRC Position

Each applicant and licensee shall install reactor coolant system (RCS) and reactor vessel head high point vents remotely operated from the control room. Although the purpose of the system is to vent noncondensible gases from the RCS which may inhibit core cooling during natural circulation, the vents must not lead to an unacceptable increase in the probability of a loss-of-coolant accident (LOCA) or a challenge to containment integrity. Since these vents form a part of the reactor coolant pressure boundary, the design of the vents shall conform to the requirements of Appendix A to 10 CFR Part 50, "General Design Criteria." The vent system shall be designed with sufficient redundancy that assures a low probability of inadvertent or irreversible actuation.

Each licensee shall provide the following information concerning the design and operation of the high point vent system:

1. Submit a description of the design, location, size, and power supply for the vent system along with results of analyses for loss-of-coolant accidents initiated by a break in the vent pipe. The results of the analyses should demonstrate compliance with the acceptance criteria of 10 CFR 50.46.

2. Submit procedures and supporting analysis for operator use of the vents that also include the information available to the operator for initiating or terminating vent usage.

CPS Response

The reactor coolant vent line is located at the very top of the reactor vessel as shown in the schematic (Drawing 796E724). This 2-inch line contains two safety-related Class 1E motor-operated valves (B21-F001 and B21-F002) that are operated from the control room. The location of this line permits it to vent the entire reactor core system normally connected to the reactor pressure vessel, with the exception of the reactor coolant isolation cooling (RCIC) head spray piping which comprises approximately 1.8 ft^3 of volume above the elevation of the RPV. This small volume was considered in the original design of the RCIC system and is of no consequence to its operation. In addition, since this vent line is part of the original design for the CPS units, it has already been considered in all the design-basis accident analyses contained elsewhere in the FSAR.

The CPS BWR/6 design is provided with sixteen power-operated safety-grade relief valves which can be manually operated from the control room to vent the reactor pressure vessel. The point of connection to the main steamlines which exit near the top of the vessel to these valves is such that accumulation of gases above that point in the vessel will not affect natural accumulation of gases in the reactor core region.

These power-operated relief valves satisfy the intent of the NRC position. Information regarding the design, qualification, power source, etc., of these valves is provided in Subsection 5.2.2.

The BWR Owners' Group position is that the requirement of single-failure criteria for prevention of inadvertent actuation of these valves, and the requirement that power be removed during normal operation, are not applicable to BWR's. These dual-purpose safety/relief valves serve an important pressure relief function in mitigating the effects of transients and concurrently provide ASME code overpressure protection via their independent safety mode of operation. Therefore, the addition of a second "block" valve to the vent lines would result in a less safe design and a violation of the code. Moreover, the inadvertent opening of a relief valve in a BWR is a design-basis event and results in a controllable transient.

In addition to these automatic (or manual) relief valves, the CPS BWR/6 design includes various other means of high-point venting. Among these are:

a. Normally closed reactor vessel head vent valves, operable from the control room, which discharge to the drywell;

b. Normally open reactor head vent line, which discharges to a main steamline;

c. Main steam-driven reactor core isolation cooling (RCIC) system turbines, operable from the control room, which exhaust to the suppression pool;

d. Main steam-driven reactor feedwater pumps operable from the control room, which exhaust to the plant condenser when not isolated. Condenser gases are continuously processed through the off-gas system.

Although the power-operated relief valves fully satisfy the intent of the venting requirement, these other means of high-point venting also provide protection against the accumulation of noncondensibles in the reactor pressure vessel.

Under most circumstances, no selection of vent path is necessary because the relief valves (as part of the automatic depressurization system), HPCS, and RCIC will function automatically in their designed modes to ensure adequate core cooling and provide continuous venting to the suppression pool.

Analyses of water inventory-threatening events with very severe degradations of system performance have been conducted. These were submitted by GE for the BWR Owners' Group to the NRC Bulletins and Orders Task Force on November 30, 1979. The fundamental conclusion of those studies was that if only one ECC system is injecting into the reactor, adequate core cooling would be provided and the production of large quantities of hydrogen was avoided. Therefore, it is not desirable to interfere with ECCS functions to prevent venting.

The small-break accident (SBA) guidelines emphasize the use of HPCS/RCIC as a first line of defense for inventory-threatening events which do not quickly depressurize the reactor. If these systems succeed in maintaining inventory, it is desirable to leave them in operation until the decision to proceed to cold shutdown is made. Thus, the reactor will be vented via RCIC turbine steam being discharged to the suppression pool. Termination of this mode of venting could also terminate inventory makeup if the HPCS had failed also. This would necessitate reactor depressurization via the SRV, which of course is another means of venting.

If the HPCS/RCIC are unable to maintain inventory, the SBA guidelines call for use of ADS or manual SRV actuation to depressurize the reactor so that the low-pressure LPCI and/or LPCS systems can inject water. Thus, the reactor would be vented via the SRV to the suppression

pool. Termination of this mode of venting is not recommended. It is preferable to remain unpressurized; however, if inventory makeup requires HPCS or RCIC restart, that can be accomplished manually by the operator. It is more desirable to establish and maintain core cooling than to avoid venting. If the HPCS/RCIC and safety/relief valves are not operable (a very degraded and extremely unlikely case), another emergency means of venting the reactor must be used. It is emphasized, however, that such emergency venting would be in the interest of core cooling and therefore could be employed under emergency procedure guidelines.

It is thus concluded that there is no reason to interfere with ECCS operation to avoid venting. It is further concluded that the emergency procedure guidelines, by correctly specifying operator actions for HPCS, RCIC, and SRV operation, also correctly specify operator actions to vent the reactor.

In the event of HPCS failure and continued vessel pressurization, the effect of noncondensibles in the RCIC turbine steam was evaluated for three cases:

a. Continuous evolution of noncondensibles due to radiolysis;

b. Quasi-continuous evolution of noncondensibles due to core heatup;

c. The presence of a quantity of noncondensibles in the reactor at the time of HPCS/RCIC startup.

Case a is a normal operating mode for RCIC and is of no concern.

For Case b to exist, the core must be uncovered. Such a condition requires multiple failures as shown in the degraded cooling analyses. Core uncovery is prevented (or cladding heatup into the rapid oxidation range is prevented) when only one ECC system is operating. For a small pipe break or a loss of feedwater, which would allow the reactor to remain at pressure, the HPCS and/or RCIC pumps would maintain inventory and there would be no substantial hydrogen production. If neither HPCS nor RCIC could maintain inventory, the reactor would be automatically or manually depressurized via safety/relief valves (or via the break, for larger breaks). Low pressure water injection systems (LPCI or LPCS) would then make up inventory. With the core covered neither the rapid generation of noncondensibles nor their accumulation would be possible.

The performance of RCIC under Case c is of concern only if there has been a very substantial production of hydrogen due to core uncovery and there is a need to start the RCIC. This is extremely unlikely and an intolerable circumstance, because it could arise only if the core were allowed to remain uncovered for a long period with the reactor at high pressure. Automatic depressurization system operation and explicit operating instructions and the emergency operator guidelines are intended to preclude this. If the level has fallen with the reactor at high pressure, the vessel would be depressurized via the relief valves automatically or manually to permit low-pressure injection independent of RCIC performance.

The result of a break in the SRV discharge piping, or any of the other pipelines for the systems enumerated above, would be the same as a small steamline break. A complete steamline break is part of the CPS design basis, and smaller-size breaks have been shown to be of lesser severity. A number of reactor system blowdowns due to stuck-open relief valves (also equivalent to a small steamline break) have confirmed this in practice. Thus no new analyses are required to show conformance with 10 CFR 50.46.

Because the relief valves and RCIC will vent the reactor continuously, and because containment hydrogen calculations in normal safety analysis calculations assume continuous venting, no special analyses are required to demonstrate "that the direct venting of noncondensible gases with perhaps high hydrogen concentrations does not result in violation of combustible gas concentration limits in containment."

Conclusion and Comparison with Requirements

The conclusions from this vent evaluation for CPS are as follows:

a. Reactor vessel head vent valves exist to relieve head pressure (at shutdown) to the drywell via remote operator action.

b. The reactor vessel head can be vented during operating conditions via the SRV's to the suppression pool.

c. The RCIC system provides an additional vent pathway to the suppression pool.

d. The size of the vents is not a critical issue because BWR SRV's have substantial capacity, exceeding the full power steaming rate of the nuclear boiler.

e. The SRV's vent to the containment suppression pool, where discharged steam is condensed without causing a rapid containment pressure/temperature transient.

f. The SRV's are not smaller than the NRC defined small LOCA. Inadvertent actuation is a design-basis event and a demonstrated controllable transient.

g. Inadvertent actuation is of course undesirable, but since the SRV's serve an important protective function, no steps such as removal of power during normal operation, should be taken to prevent inadvertent actuation.

h. A dual indication of SRV position (vibration and temperature) is provided in the control room.

i. Each SRV is remotely operable from the control room.

j. Each SRV is seismically and Class 1E qualified.

k. Block valves are not required, so block valve qualifications are not applicable.

l. No new 10 CFR 50.46 conformance calculations are required, because the vent provisions are part of the systems in the plant's original design and are covered by the original design bases.

m. Plant procedures govern the operator's use of the relief mode for venting reactor pressure.

NRC ACTION PLAN (NUREG-0660 as clarified by NUREG-0737)

II.B.2 Design Review of Plant Shielding and Environmental Qualification of Equipment for Spaces/Systems Which May Be Used in Postaccident Operations

NRC Position

With the assumption of a postaccident release of radioactivity equivalent to that described in Regulatory Guide 1.3 and 1.4 (i.e., the equivalent of 50% of the core radioiodine, 100% of the core noble gas inventory, and 1% of the core solids are contained in the primary coolant), each licensee shall perform a radiation and shielding-design review of the spaces around systems that may, as a result of an accident, contain highly radioactive materials. The design review should identify the location of vital areas and equipment, such as the control room, radwaste control stations, emergency power supplies, motor control centers, and instrument areas, in which personnel occupancy may be unduly limited or safety equipment may be unduly degraded by the radiation fields during postaccident operation of these systems.

Each licensee shall provide for adequate access to vital areas and protection of safety equipment by design changes, increased permanent or temporary shielding, or postaccident procedural controls. The design review shall determine which types of corrective actions are needed for vital areas throughout the facility.

CPS Response

A review of the design of shielding has been performed for the CPS in accordance with NUREG-0737, II.B.2. The radiation qualification of the safety-related equipment is discussed in Section 3.11.

Accident Scenario

The accident that forms the design basis for this review consists of damage to the fuel, resulting in the release of fission products from ruptured fuel cladding. The cause or sequence of events leading to this condition is not strictly defined, but it is postulated that the accident can take place as a result of either a large pipe break or a loss of cooling water without a break in a major pipe. For easy reference, the former type of accident can be called a line break accident and the latter a no-line-break accident. The distribution of fission products in various systems depends upon the accident type.

Line-Break Accident

In this type of accident, the reactor coolant pressure boundary is ruptured, and the fission products are released immediately to the drywell and the suppression pool. The fission products are also instantly released to the primary containment atmosphere outside of the drywell if the fuel damage precedes the drywell pressure blowdown. Otherwise, the fission products initially stay in the drywell and are released to the containment over a longer period of time through the combustible gas control system and the suppression pool.

No Line-Break Accident

It is assumed that the reactor coolant pressure boundary is intact, yet fuel cladding is damaged due to the loss of adequate cooling. It would appear that in such a case all the released fission products are confined to the reactor coolant and the steam in the reactor vessel dome. NRC has stipulated that this assumption be made. However, such a condition is not very probable in a BWR. Loss of adequate cooling is expected to increase the pressure in the vessel, which is relieved through the safety-relief valve operation. Thus, most of the released fission products are expected to be dumped into the suppression pool in a short time.

If the fission products are assumed to be confined to the vessel, the systems affected by this assumption will be the RHR, the postaccident sampling and the steam side of the RCIC.

Radiation Source Assumptions

The radioactive nuclides released from the core due to the accident are distributed into the reactor coolant, suppression pool water and the air in the drywell and the primary containment. They are then carried to different areas and components by the systems which are put into operation after the accident. The components that receive these isotopes and the pipes that carry them can be treated as individual sources of radiation. They are located in various parts of the station, and thus affect the radiation environment throughout the station. Certain assumptions are made in order to quantify these sources.

The radiation sources for this report were calculated based on the guidance of NUREG-0737, and upon the accident scenarios discussed above. The sources were calculated as a function of time, with due accounting for the radioactive decay and migration of nuclides. The calculations were performed using the computer codes RACER and RUNT (References 22 and 23). The basic assumptions made and the parameters used in the calculations are listed in Table D-1.

Systems in Postaccident Use

Clinton Power Station systems that can be used in postaccident operations and which affect the radiation levels in the station are the High Pressure Core Spray, Low Pressure Core Spray, Residual Heat Removal, Reactor Core Isolation Cooling, Main Steam Isolation Valve Leakage Control, Standby Gas Treatment, Combustible Gas Control, Control Room HVAC, Sampling, Radiation Monitoring, and Floor Drain and Equipment Drain Systems. These systems are described in detail in various sections of the FSAR.

Vital Areas

The areas of the station where access will be required following an accident have been identified as the control room, technical support center (TSC), the sampling station and sample analysis areas. The safety systems and components are designed to have redundancy, and to be operated remotely so that access near their locations will not be required. Further, the safety components have been qualified to withstand the radiation environment that they will be subjected to in their respective locations. The environmental zones and component qualification are discussed in Section 3.11.

Vital Area Dose Analysis

Radiation doses to personnel occupying the vital areas have been calculated based upon the considerations of postaccident radiation sources and the occupancy requirements.

a. Control Room

The control room dose analysis has been presented in Section 15.6.5. The control room shielding design and ventilation system design are discussed in Section 6.4. No additional shielding or other protective features are required to meet the dose criteria of NUREG-0737.

b. Technical Support Center (TSC)

Technical support center has been established in the same protected envelope as the control room. Hence, the occupancy doses in the TSC are the same as those in the control room.

c. Sampling Station

In order to collect samples of postaccident fluids, a postaccident sampling system is installed at CPS. This system is discussed in Section II.B.3 of this appendix.

The postaccident sampling panel is located in the Control/Diesel Generator building. The panel location has been chosen to enable routing of the sample lines through shielded pipe tunnels, to provide easy and safe access from the control room and TSC, and to enable convenient transport of the samples to the laboratories. The chosen location of the sampling panel is in the same building as the control room and TSC and on the same floor as the laboratories. The absence of any postaccident sources between the control room/TSC and the sampling station ensures that the access path to the sampling panel will have low radiation background.

The panel is equipped with lead and steel shielding in the front. Concrete walls and ceiling are added around the panel as well for shielding. The sample and return lines are routed through shielded pipe tunnels. Details of the sampling station shielding are shown in Figure D-3.

The operator dose values for sample collection activity were calculated to be well within the guidelines. The radiation sources used in the calculations were the design basis accident sources at one hour after the accident. Sample collection and transport times were conservatively determined. The operator dose values were calculated for various sampling and analysis activities required. The total operator dose, even if one operator were to perform all of the above activities, was calculated to be less than 2 rem to the extremities and less than 1 rem to the whole body. The integrated dose while taking other types of samples and/or while taking samples later on in the course of the accident is expected to be much smaller. The sample is taken directly into a shielded cask which is designed to minimize dose to the operator while transporting the sample. The postaccident sample system is described in Subsection 9.3.7.

d. Counting Room and Radiation Chemistry Laboratory

These areas are designed for analysis of the samples taken from the sampling station. As indicated in Figure D-4, Sheet 1, the radiation is less than 15 mrem/hr which is the same rate as required for continuous occupancy of the control room and the TSC.

However, contrary to habitability requirements of the control room, access to these areas would be on an infrequent and irregular basis. The occupancy doses in the sample analysis areas were calculated for the worst samples taken from the postaccident sampling panel and the gaseous effluent radiation sampler. In each case, the occupancy dose values were calculated to be well within the dose limits of NUREG-0737.

Postaccident Radiation Zone Maps

Postaccident radiation zone maps are given in Figure D-4, Sheets 1, 2 and 3. The maps represent the maximum anticipated radiation dose rate for the areas identified as vital. Entry to the vital areas is also shown on Figure D-4.

Radiation Qualification of Safety-Related Equipment

Radiation Qualification of safety-related equipment is an integral part of the environmental equipment qualification program, which is addressed in FSAR Section 3.11.

Design Modifications

As a result of the postaccident radiation and shielding design review, the following design modifications were implemented to reduce radiation doses:

a. The shielding design review has indicated that the only shielding design modification required is the addition of shielding around the postaccident sampling panel, which has been implemented, as discussed above.

b. One of the significant contributors to radiation sources in the secondary containment was found to be the exhaust of the MSIV leakage control system which was routed into an RHR cubicle. Routing this exhaust to a suction header of the standby gas treatment system (SGTS) via a pipe connection eliminates this source contributor from the secondary containment, and significantly improves the postaccident radiation environment there. The rerouting of the discharge lines to the SGTS inlet is shown in Drawing M05-1070.

TABLE D-1
RADIOACTIVE SOURCE ASSUMPTIONS

	Source Medium	Parameters and Assumptions Used in Source Calculations
1.	Reactor Core	o Power level - 3,473 MWt o Fuel irradiation time - 3 years o Thermal-neutron-flux - 3.97 x 10^{13} cm^{-2} .sec^{1}
2.	Reactor Coolant	o 100% noble gases*, 50% halogens, 1% solids mixed uniformly in the reactor coolant volume of 7,520 ft^3
3.	Suppression Pool	o 0% noble gases, 50% halogens, 1% solids mixed uniformly in the reactor coolant plus suppression pool volume of 144,300 ft^3
4.	Drywell Air	o 100% noble gases, 25% halogens mixed uniformly in drywell volume of 241,699 ft^3
5.	Primary Containment Air	o 100% noble gases, 25% halogens mixed uniformly in drywell plus containment volume of 1,512,341 ft^3
6.	Secondary Containment Air	o Secondary containment volume - 1,981,000 ft^3 o 0.65%/day primary containment leak o 28 scfh/line MSIV leak o 1500 gal leak from ECCS o 4000 cfm exhaust via SGTS (a) o 100% mixing, for source concentrations in the secondary containment air (b) o 0% mixing, for releases from the secondary containment
7.	SGTS Filter	o Flow rate – 4,000 cfm o 100% particulate, 99% iodine removal efficiency o Sources in air as in 6 (b) above
8.	Plume	o Releases from the SGTS, with parameters as in Item 7 above o Complete mixing in the wake of the containment building o 1 m/sec wind speed
9.	Control Room HVAC Filter	o Releases per Item 7 above o /Q as given in FSAR o Dual, separated air intake locations o Flow rate - 3,000 cfm o 100% particulate, 99% iodine removal efficiency

* Fission product activities are listed as percentages of core inventory.

NRC ACTION PLAN (NUREG-0660 as clarified by NUREG-0737)

II.B.3 Postaccident Sampling Capability

Clinton Power Station License Amendment 155 approves the elimination of the requirement to have and maintain the Post Accident Sampling System. The following commitments were made associated with the licensing amendment requests.

1. Clinton Power Station has developed contingency plans for obtaining and analyzing highly radioactive samples of reactor coolant, suppression pool, and containment atmosphere. The contingency plans will be contained in the CPS chemistry procedures and implemented with the implementation of the license amendment. Establishment of contingency plans is considered a regulatory commitment.

2. The capability for classifying fuel damage events at the Alert level threshold will be established at a level of core damage associated with radioactivity levels of 300 micro-curies/gm dose equivalent iodine. This capability will be described in emergency plans and emergency plan implementing procedures and implemented with the implementation of the license amendment. The capability for classifying fuel damage events is considered a regulatory commitment.

3. Clinton Power Station has established the capability to monitor radioactive iodines that have been released offsite to the environs. This capability is described in emergency plans and emergency plan implementing procedures. The capability to monitor radioactive iodines is considered a regulatory commitment.

The following information contained in the USAR regarding the regulatory requirements for post accident sampling is retained for historical purposes.

NRC Position

A design and operational review of the reactor coolant and containment atmosphere sampling line systems shall be performed to determine the capability of personnel to promptly obtain (less than 1 hour) a sample under accident conditions without incurring a radiation exposure to any individual in excess of 3 and 18-3/4 rem to the whole body or extremities, respectively. Accident conditions should assume a Regulatory Guide 1.3 or 1.4 release of fission products. If the review indicates that personnel could not promptly and safely obtain the samples, additional design features or shielding should be provided to meet the criteria.

A design and operational review of the radiological spectrum analysis facilities shall be performed to determine the capability to promptly quantify (in less than 2 hours) certain radionuclides that are indicators of the degree of core damage. Such radionuclides are noble gases (which indicate cladding failure), iodines and cesiums (which indicate high fuel temperatures), and nonvolatile isotopes (which indicate fuel melting). The initial reactor coolant spectrum should correspond to a Regulatory Guide 1.3 or 1.4 release. The review should also consider the effects of direct radiation from piping and components in the auxiliary building and possible contamination and direct radiation from airborne effluents. If the review indicates that

the analyses required cannot be performed in a prompt manner with existing equipment, then design modifications or equipment procurement shall be undertaken to meet the criteria.

In addition to the radiological analyses, certain chemical analyses are necessary for monitoring reactor conditions. Procedures shall be provided to perform boron and chloride chemical analyses assuming a highly radioactive initial sample (Regulatory Guide 1.3 or 1.4 source term). Both analyses shall be capable of being completed promptly (i.e., the boron sample analysis within an hour and the chloride sample analysis within a shift).

CPS Position

A Post Accident Sampling System (PASS) has been installed for the Clinton Power Station Unit 1. This system is designed to sample a) reactor coolant, b) suppression pool water, c) drywell and containment atmospheres, and d) effluent from the reactor water cleanup system. The PASS, together with the sampling and analysis procedures, is designed to limit the radiation exposure to the operating personnel below the levels specified in GDC-19. The PASS for Clinton Power Station has the following capabilities:

Sampling and Analysis

Online analysis capability is provided for measurements of pH on all liquid samples. The pH measurement will have a range of 0 to 14.

In addition to the aforementioned online analysis capability, the PASS provides grab sample capability for offline analysis of the following:

1. Radionuclide Analysis

   Offline radionuclide analysis can be performed on diluted samples of liquid, drywell atmosphere, and containment atmosphere.

   This analysis will be performed to quantify the noble gases in containment and drywell which indicate cladding failure, iodines and cesiums in reactor coolant which indicate high fuel temperature, and nonvolatile isotopes in reactor coolant which indicate fuel melting.

   The PASS system design supports obtaining a sample and analytical data as set forth in NUREG-0737 and Regulatory Guide 1.97, Rev. 3 as promptly (within 3 hours from the time the decision is made to sample (except 4 days (96 hours) for Chlorides)) and safely as possible after an accident. Sensitivity of onsite liquid sample analysis capability permits measurement of nuclide concentration in the range from approximately 1 μCi/g-10Ci/g.

2. Boron Analysis

   This analysis will be carried out onsite via a tetra-fluoroborate selective ion electrode. The selective ion electrode has the capability of quantifying boron in the 0.5 to 6 ppm range on a direct measurement. In the event of a worst case accident, a diluted (1000:1) reactor coolant sample will be analyzed; the overall range would then be 500 to 6000 ppm. Testing at the site laboratory indicates good results in the 500 to 1500 ppm range with accuracies within 10%.

3. Chloride Analysis

An undiluted reactor coolant sample will be analyzed at an offsite facility within 4 days. In the event of a minor accident (sample activity is 1/1000 of the worst case activity), a liquid sample can also be analyzed onsite via an ion chromatograph. This analysis will have a range of 0 to 20 ppm.

4. $H_2/0_2$ Analysis for Containment and Drywell Atmospheres

Two separate continuous 1E powered containment and drywell atmospheric monitor systems will be utilized. These systems are separate from PASS.

Design and Operational Provisions

The PASS sample panel is located in a subcompartment within the division 3 diesel generator room at elevation 737'. The location of the sample panel was selected so as to facilitate easy access to the plant laboratory facility and counting room and also to keep the sample lines as short as possible to minimize the volume of fluid taken from the containment.

The PASS is designed to provide a representative sample in a reasonable time frame. Sample lines are sized to minimize sample consumption and to assure a high sample velocity that will minimize possible plateouts in the sample lines. Sample lines can be purged by sample media before sampling to assure a representative sample. Capabilities for flushing of liquid sample lines with demineralized water is provided except during a loss of offsite power. Purging of atmosphere samples with nitrogen is provided to remove sample residues. The PASS discharge is returned to the containment when the PASS is used after an accident. When testing during normal plant operation, PASS discharge is to the radwaste system.

The reactor coolant sample for the PASS is obtained from a reactor jet pump pressure instrumentation sense line until the reactor is depressurized. After the reactor is depressurized, the reactor coolant sample is taken from either the RHR A or RHR B pump discharge to assure that a sample representative of the core condition is obtained.

Dissolved gases can be stripped to lower personnel doses levels when obtaining a cooled pressurized sample of the reactor coolant.

Sample analysis ranges are intended to meet the requirements of Regulatory Guide 1.97, Revision 3, where feasible.

The PASS system is designed to be supplied with emergency power within thirty minutes of a loss of offsite power event.

Loads in the PASS system are electrically isolated from the diesel generator bus through either a shunt trip or two fuses or circuit breakers in series as described in Subsection 8.1.6.1.14.

PASS employs a minimum number of valves which are inaccessible for repair after an accident. All such valves are environmentally qualified for the post-accident conditions in which they will operate.

The ventilation exhaust from the panel is filtered through the Auxiliary Building HVAC during normal operation and through the drywell purge system post-LOCA. The latter ventilation system contains charcoal absorbers and high-efficiency particulate air (HEPA) filters.

Refer to Subsection 9.3.7 for additional information about the PASS design.

NRC ACTION PLAN (NUREG-0660 as clarified by NUREG-0737)

II.B.4 Training for Mitigating Core Damage

NRC Position

Licensees are required to develop a training program to teach the use of installed equipment and systems to control or mitigate accidents in which the core is severely damaged. They must then implement the training program.

CPS Response

Training on the use of equipment and systems to control or mitigate accidents which the core is severely damaged has been developed using the guidance of Institute of Nuclear Power Operations (INPO) document INPO 87-021, "Guideline for Training to Recognize and Mitigate the Consequences of Core Damage." The scope of this program is described in the Reactor Operator Training Program. The process through which the Reactor Operator Training Program is maintained is identified in USAR Section 13.2.

NRC ACTION PLAN (NUREG-0660 as clarified by NUREG-0737)

II.D.1 Performance Testing of BWR and PWR Relief and Safety Valves (NUREG-0578, Subsection 2.1.2)

NRC Position

Pressurized-water reactor and boiling-water reactor licensees and applicants shall conduct testing to qualify the reactor coolant system relief and safety valves under expected operating conditions for design-basis transients and accidents.

CPS Response

CPS has sponsored, through the BWR Owners' Group, a generic test program to satisfy this requirement. The testing requirement to qualify SRV's for the "expected operating conditions" associated with design-basis accidents and operational transients has been determined by the BWR Owners' Group through systematic analysis of these events as defined in Regulatory Guide 1.70, Revision 2. The conclusion from that evaluation was submitted to the NRC in September 1980 in response to Item 2.1.2 of NUREG-0578; the conclusion was that "there is no design-basis accident or transient which requires safety, relief, or dual function SRV's to pass two-phase or liquid flow at high pressure." This submittal, however, acknowledged the alternate shutdown cooling mode which is considered in the design analysis of plants and committed to testing SRV's with liquid and with two-phase flow under low pressure conditions associated with this event. Additional justification was provided by the BWR Owners' Group to the NRC Staff on March 31, 1981 in response to a February 10, 1981 NRC request for additional information.

A test plan which addresses the alternate shutdown mode of cooling was included in this September 1980 submittal to the NRC. The purpose of the test plan is two-fold:

a. To demonstrate the capability of each type of SRV to operate satisfactorily under the bounding case of expected water discharge release of low-pressure water with resultant typical BWR pipe loads on the SRV.

b. To measure the SRV piping discharge loads during water discharge through these valves.

The Dikkers 8 x 10 direct-acting SRV used at the Clinton Power Station is included in this test program.

The test program provides for manual and automatic initiation of the SRV's. Among other tests, it involves the admission of slightly subcooled water at approximately 250 psig for fluid flow testing. A steam test followed by a water test is repeated three times.

The acceptance criteria include proper opening on demand (inlet pressure at setpoint pressure); proper blowdown, i.e., SRV does not reclose except when inlet pressure drops below the setpoint minus the blowdown decrement; SRV opens properly on command for relief function; and pressure integrity of the valve body, connections, and piping is maintained at all times.

The generic test program has been completed and preliminary results were transmitted in a letter from T. J. Dente (BWR Owners' Group) to D. G. Eisenhut (NRC), dated July 1, 1981. The

results showed that for the Dikkers valve all of the test criteria were met. The final test report for the operability test program was submitted in a letter from T. J. Dente (BWR Owners' Group) to D. G. Eisenhut (NRC), dated September 25, 1981. This report, which includes final test data and analyses, demonstrates the operational adequacy of the SRV's and the SRV discharge piping and supports. These final test results are contained in the General Electric Co. document NEDE-24988-P, "Analysis of Generic BWR Safety/Relief Valve Operability Test Results" which was included in the September 25, 1981 letter. A review of the test report shows that the operational adequacy of the SRV's and the piping and supports for Clinton Power Station has been demonstrated for the conditions defined in this Action Plan item.

In a November 14, 1984 letter from A. Schwencer (NRC) to F. A. Spangenberg (IPC), the NRC asked specific questions concerning the applicability of the generic test results to Clinton Power Station. A January 16, 1985 letter from F. A. Spangenberg to A. Schwencer in response to these NRC questions confirmed the applicability of the generic test results to Clinton Power Station.

NRC ACTION PLAN (NUREG-0660 as clarified by NUREG-0737)

II.D.3 Direct Indication of Relief and Safety Valve Position

NRC Position

Reactor coolant system relief and safety valves shall be provided with a positive indication in the control room derived from a reliable valve-position detection device or a reliable indication of flow in the discharge pipe.

CPS Response

The Clinton Power Station is equipped with a Safety Relief Valve Monitoring System (SRVM) in order to provide the operator with positive indication of valve position (closed; not closed). The system utilizes a piezoelectric accelerometer mounted on the discharge piping of each safety relief valve. This sensor detects the valve vibration levels and provides electrical outputs to individual preamplifiers and then to signal analysis electronics in the main control room. The SRVM cabinet which is safety-related, with bar graph type indicators, is located on a back row panel in the main control room. Non-safety-related valved status indication is provided in the front row by a common annunciator alarm, as well as individual valve status alarm indications provided by display.

A diverse measurement for indication of SRV opening or long term leakage is provided via temperature elements mounted in thermowells on each of the SRV blowdown pipes to the suppression pool. These indications provide confirmation of the SRVM readouts.

In order to provide reliable SRV indication, the SRVM is powered from a class 1E bus. As a result of its direct connection to a 1E bus, it is classified as divisionally associated and is furnished as Nuclear Safety Grade. The SRVM is qualified in accordance with the requirements of standards IEEE 323-1974 and IEEE 344-1975.

The utilization of information available from the SRVM has been integrated into the plant off-normal procedure 4009.01, "Inadvertent Opening Safety/Relief Valve."

The use of the SRVM has been incorporated into the operator training program for the Clinton Power Station.

Additional information on the SRVM is provided in Subsection 7.6.1.11.

NRC ACTION PLAN (NUREG-0660 as clarified by NUREG-0737)

II.E.1.1 Auxiliary Feedwater System Evaluation

NRC Position

The Office of Nuclear Reactor Regulation is requiring reevaluation of the auxiliary feedwater (AFW) systems for all PWR operating plant licensees and operating license applications. This action includes:

a. Perform a simplified AFW system reliability analysis that uses event-tree and fault-tree logic techniques to determine the potential for AFW system failure under various loss-of-main-feedwater-transient conditions. Particular emphasis is given to determining potential failures that could result from human errors, common causes, single-point vulnerabilities, and test and maintenance outages;

b. Perform a deterministic review of the AFW system using the acceptance criteria of Standard Review Plan Subsection 10.4.9 and associated Branch Technical Position ASB 10-1 as principal guidance; and

c. Reevaluate the AFW system flowrate design bases and criteria.

CPS Response

This requirement is not applicable to the Clinton Power Station BWR/6 design. It applies only to PWR-type reactors.

NRC ACTION PLAN (NUREG-0660 as clarified by NUREG-0737)

II.E.1.2 Auxiliary Feedwater System Automatic Initiation and Flow Indication

NRC Position

Part 1: Auxiliary Feedwater System Automatic Initiation

Consistent with satisfying the requirements of General Design Criterion 20 of Appendix A to 10 CFR Part 50 with respect to the timely initiation of the auxiliary feedwater system (AFWS), the following requirements shall be implemented in the short term:

a. The design shall provide for the automatic initiation of the AFWS.

b. The automatic initiation signals and circuits shall be designed so that a single failure will not result in the loss of AFWS function.

c. Testability of the initiating signals and circuits shall be a feature of the design.

d. The initiating signals and circuits shall be powered from the emergency buses.

e. Manual capability to initiate the AFWS from the control room shall be retained and shall be implemented so that a single failure in the manual circuits will not result in the loss of system function.

f. The ac motor-driven pumps and valves in the AFWS shall be included in the automatic actuation (simultaneous and/or sequential) of the loads onto the emergency buses.

g. The automatic initiating signals and circuits shall be designed so that their failure will not result in the loss of manual capability to initiate the AFWS from the control room.

In the long term, the automatic initiation signals and circuits shall be upgraded in accordance with safety-grade requirements.

Part 2: Auxiliary Feedwater System Flowrate Indication

Consistent with satisfying the requirements set forth in General Design Criterion 13 to provide the capability in the control room to ascertain the actual performance of the AFWS when it is called to perform its intended function, the following requirements shall be implemented:

a. Safety-grade indication of auxiliary feedwater flow to each steam generator shall be provided in the control room.

b. The auxiliary feedwater flow instrument channels shall be powered from the emergency buses consistent with satisfying the emergency power diversity requirements of the auxiliary feedwater system set forth in Auxiliary Systems Branch Technical Position 10-1 of the Standard Review Plan, Subsection 10.4.9.

CPS Response

This requirement is not applicable to the Clinton Power Station BWR/6 design. It applies only to PWR-type reactors.

NRC ACTION PLAN (NUREG-0660 as clarified by NUREG-0737)

II.E.3.1 Emergency Power Supply for Pressurizer Heaters

NRC Position

Consistent with satisfying the requirements of General Design Criteria 10, 14, 15, 17, and 20 of Appendix A to 10 CFR Part 50 for the event of loss of offsite power, the following positions shall be implemented:

a. The pressurizer heater power supply design shall provide the capability to supply, from either the offsite power source or the emergency power source (when offsite power is not available), a predetermined number of pressurizer heaters and associated controls necessary to establish and maintain natural circulation at hot standby conditions. The required heaters and their controls shall be connected to the emergency buses in a manner that will provide redundant power supply capability.

b. Procedures and training shall be established to make the operator aware of when and how the required pressurizer heaters shall be connected to the emergency buses. If required, the procedures shall identify under what conditions selected emergency loads can be shed from the emergency power source to provide sufficient capacity for the connection of the pressurizer heaters.

c. The time required to accomplish the connection of the preselected pressurizer heater to the emergency buses shall be consistent with the timely initiation and maintenance of natural circulation conditions.

d. Pressurizer heater motive and control power interfaces with the emergency buses shall be accomplished through devices that have been qualified in accordance with safety-grade requirements.

CPS Response

This requirement is not applicable to the Clinton Power Station BWR/6 design. It applies only to PWR-type reactors.

NRC ACTION PLAN (NUREG-0660 as clarified by NUREG-0737)

II.E.4.1 Dedicated Hydrogen Penetrations

NRC Position

Plants using external recombiners or purge systems for post-accident combustible gas control of the containment atmosphere should provide containment penetration systems for external recombiner or purge systems that are dedicated to that service only, that meet the redundancy and single-failure requirements of General Design Criteria 54 and 56 of Appendix A to 10 CFR 50, and that are sized to satisfy the flow requirements of the recombiner or purge system.

The procedures for the use of combustible gas control systems following an accident that results in a degraded core and release of radioactivity to the containment must be reviewed and revised, if necessary.

CPS Response

The Clinton Power Station Combustible Gas Control System includes dedicated containment suction and return penetrations for both of the permanently installed hydrogen recombiners. Only one recombiner is necessary for control of the design basis hydrogen concentration inside the containment, thus allowing the second unit to be used as a back-up. The system's safety grade piping, valves and penetrations are sized to meet system flow requirements. The system meets the redundancy and single-failure requirements of General Design Criteria 54 and 56 of Appendix A to 10 CFR 50.

The Clinton Power Station procedure for operation of the Containment Combustible Gas Control System was prepared after the accident at the Three Mile Island Station. The experience of the accident was considered during the preparation of this procedure. The fact that the Clinton Power Station Combustible Gas Control System utilizes permanently installed hydrogen recombiners that are adequately shielded will help to assure that the system is readily available for operation and does not pose a radiation problem during operation and maintenance.

See Subsections 3.1.2.5 and 6.2.5 and Drawing M01-1505 for additional information.

NRC ACTION PLAN (NUREG-0660 as clarified by NUREG-0737)

II.E.4.2 Containment Isolation Dependability

NRC Position

1. Containment isolation system designs shall comply with the recommendations of Standard Review Plan Subsection 6.2.4 (i.e., that there be diversity in the parameters sensed for the initiation of containment isolation).

2. All plant personnel shall give careful consideration to the definition of essential and nonessential systems, identify each system determined to be essential, identify each system to be nonessential, describe the basis for selection of each essential system, modify their containment isolation designs accordingly, and report the results of the reevaluation to the NRC.

3. All nonessential systems shall be automatically isolated by the containment isolation signal.

4. The design of control systems for automatic containment isolation valves shall be such that resetting the isolation signal will not result in the automatic reopening of containment isolation valves. Reopening of containment isolation valves shall require deliberate operator action.

5. The containment setpoint pressure that initiates containment isolation for nonessential penetrations must be reduced to the minimum compatible with normal operating conditions.

6. Containment purge valves that do not satisfy the operability criteria set forth in Branch Technical Position CSB 6-4 or the Staff Interim Position of October 23, 1979 must be sealed closed as defined in SRP 6.2.4, Item II.3.f during operational conditions 1, 2, 3, and 4. Furthermore, these valves must be verified to be closed at least every 31 days. (A copy of the Staff Interim Position is enclosed as Attachment 1).

7. Containment purge and vent isolation valves must close on a high radiation signal.

CPS Response

The containment isolation system for CPS has been reviewed in accordance with NUREG-0737. The results of the review are as follows:

1. Every containment isolation valve with the exception of valves 1VR002A, 1VR002B, 1VQ006A and IVQ006B receives at a minimum, two isolation signals from diverse sources. The above four valves are the containment building HVAC inboard and outboard 4-inch bypass isolation valves which are interlocked to close or not open on containment pressure high signal. However, these valves are keylocked at the handswitch in the "closed" position.

2. Essential and nonessential systems, for the purpose of containment isolation are identified in Table D-2. Essential systems are defined as those systems that may be required in response to a loss-of-coolant-accident (LOCA). Nonessential systems are defined as those systems not required for any response to a LOCA.

   As indicated in Table 6.2-47, all nonessential system penetrations (except instrument lines) have two isolation barriers in series that meet the requirements of the General Design Criteria specified in the table. Isolation of nonessential system penetrations is automatic and based on diverse isolation signals as also specified in Table 6.2-47.

3. This requirement is addressed in Response No. 2 above.

4. Control systems for containment isolation valves which automatically isolate do not permit automatic reopening of these valves when the isolation signal is reset. The normal control switches for these valves must be manipulated individually subsequent to the resetting of the isolation signal to reopen the valves.

5. General Electric conducted a study to evaluate this concern. A synopsis of this study follows.

   The containment isolation analytical setpoint pressure for Mark III containment is approximately 2 psig (drywell pressure). Under normal operating conditions, fluctuations in the atmosphere barometric pressure as well as heat inputs from such sources as pumps can result in containment pressure increases on the order of 1 psi. Consequently, the isolation setpoint of 2 psig provides 1 psi margin above the maximum expected operating pressure. The 1 psi margin to isolation has proved to be a suitable value to minimize the possibility of spurious containment isolation. At the same time, it is such a low value (particularly in view of the small drywell volume) that it provides a very sensitive and positive means of detecting and protecting against breaks and leaks in the reactor coolant system. No change of the setpoint is necessary.

6&7. Following is a listing of the CPS containment boundary vent and purge isolation valves:

Valves	Isolation Signals (See notes)	Switch Information
1VQ004A	1,2,3,4,5	keylocked, key removable in "auto"
1VQ004B	1,2,3,4,5	keylocked, key removable in "auto"
1VQ006A	6*	keylocked
1VQ006B	6*	keylocked
1VR001A	1,2,3,4,5	keylocked, key removable in "auto"
1VR001B	1,2,3,4,5	keylocked, key removable in "auto"
1VR002A	6*	keylocked
1VR002B	6*	keylocked
1VR006A	1,2,3,4,5	non-keylocked, ON-OFF control switch
1VR006B	1,2,3,4,5	non-keylocked, ON-OFF control switch
1VR007A	1,2,3,4,5	non-keylocked, ON-OFF control switch
1VR007B	1,2,3,4,5	non-keylocked, ON-OFF control switch

* These bypass valves are normally closed. Key removable in close position and kept under administrative controls. Branch Technical Position CSB 6-4 and Staff Interim Position dated October 23, 1979 states that the use of large containment purge and vent lines should be restricted to cold shutdown conditions and refueling operations and they must be sealed closed only in operational modes 1, 2 and 3.

Notes:

1. RPV low water level (Level 2).

2. Drywell pressure high (2 psig).

3. Containment exhaust duct high radiation.

4. High radiation in containment refueling pool exhaust duct.

5. High radiation in continuous containment purge exhaust.

6. Containment high pressure.

TABLE D-2
ESSENTIAL AND NONESSENTIAL SYSTEMS
FOR THE PURPOSE OF CONTAINMENT ISOLATION

System	Classification	Comments
Main Steam	Nonessential	Not required for shut-down following LOCA
MSIV Leakage Control	Essential	Required for long-term leaktightness of MSIV's
Feedwater	Nonessential	Not required for shut-down following LOCA
Reactor Core Isolation Cooling	Essential	Necessary for core cooldown
Reactor Water Cleanup	Nonessential	Not required for shutdown following LOCA
High-Pressure Core Spray	Essential	ECCS system
Low-Pressure Core Spray	Essential	ECCS system
Standby Liquid Control	Essential	Should be available as backup to CRD system
Equipment Drains	Nonessential	Not required for shutdown following LOCA
Floor Drains	Nonessential	Not required for shutdown following LOCA
Suppression Pool Cleanup	Nonessential	Not required for shutdown following LOCA Primary Containment
Atmosphere Monitoring	Essential	Required for post-accident monitoring of containment atmosphere hydrogen concentration
Residual Heat Removal	Essential	ECCS system
Control Rod Drive	Nonessential	Not required for shutdown following LOCA
Component Cooling Water	Nonessential	Not required for shutdown following LOCA
Instrument Air		
ADS Pneumatic Supply	Essential	For ADS relief valves and ADS accumulators
Containment Pneumatic Supply	Nonessential	Not required for shutdown following LOCA

TABLE D-2 (CONT'D)

System	Classification	Comments
Condensate Storage	Nonessential	Not required for shutdown following LOCA
Plant Chilled Water	Nonessential	Not required for shutdown following LOCA
Breathing Air	Nonessential	Not required for shutdown following LOCA
Service Air	Nonessential	Not required for shutdown following LOCA
Fuel Pool Cooling and Cleanup	Nonessential	Not required for shutdown following LOCA
Radwaste	Nonessential	Not required for shutdown following LOCA
Fire Protection	Nonessential	Not required for shutdown following LOCA
Combustible Gas Control	Essential	Requirement to maintain hydrogen concentration below ignition concentration
Containment HVAC	Nonessential	Not required for shutdown following LOCA
Containment Building Ventilation System	Nonessential	Not required for shutdown following LOCA
Containment Post-LOCA Purge	Nonessential	Backup to hydrogen recombiners of combustible gas control
Drywell Purge	Nonessential	Not required for shutdown following LOCA
Drywell Cooling Chilled Water	Nonessential	Not required for shutdown following LOCA
Shutdown Service Water	Essential	Necessary to maintain cooling for H2 mixing system

At present, all of the above listed valves meet the intent of positions 6 and 7 of the NUREG. Purge and vent valves are to isolate on high radiation signals, and those purge and vent valves that do not isolate on high radiation signals are to be "sealed closed" valves.

NRC ACTION PLAN (NUREG-0660 as clarified by NUREG-0737)

II.F.1 Additional Accident-Monitoring Instrumentation

NRC Position

The NUREG-0737 requirements evolved from three basic requirements given in NUREG-0578 (Items a through c below) and were subsequently clarified by NRC letters dated September 27, 1979 and November 9, 1979. These letters also include additional requirements resulting in Items d through f below. A summary of these items is as follows:

a. Noble gas effluent radiological monitors;

b. Provisions for continuous sampling of plant effluents for postaccident releases of radioactive iodines and particulates, and onsite laboratory facilities;

c. Containment high-range radiation monitor;

d. Containment pressure monitor;

e. Containment water level monitor; and

f. Containment hydrogen concentration monitor.

The individual requirements for each item have been omitted from this synopsis due to their length and detail required for an adequate recitation.

CPS Response

a. Noble Gas Effluent Radiological Monitor

CPS has installed Noble Gas Effluent Radiological Monitors as specified by II.F.1, Attachment 1 of NUREG-0737 except as noted below. The design details of this monitoring system are described in Subsections 7.6.1.2.6 and 7.6.1.2.7.

b. Sampling and Analysis of Plant Effluents

CPS has provided for continuous sampling of plant gaseous effluents for postaccident releases of radioactive iodines and particulates as specified by II.F.1, Attachment 2 of NUREG-0737 except as noted below.

Exceptions to II.F.1, Attachments 1 and 2:

(1) The system is designed to provide isokinetic sampling. However, a sample flow control device, as required by NUREG-0737, is not provided. This is deemed not necessary, as the effluent flow conditions are not expected to change per the design of CPS HVAC systems.

(2) The system sample lines were provided with electric heat tracing to maintain the sample above dewpoint prior to reaching the particulate/iodine sampler assembly. However, a

small section of sample tubing and the particulate/iodine sampler assembly were not heat traced (refer to Subsections 7.6.1.2.6.3.1 and 7.6.1.2.7.3.1 for heat tracing description). As a result moisture may form in the particulate/iodine sampler assembly, depending on the effluent stream moisture content, the temperature of the effluent sample and the ambient temperature in which the particulate/iodine sampler assembly is located. CPS has committed to using waterproofed particulate filter paper and silver zeolite iodine cartridges to minimize the effect entrained moisture has on the sampler filter efficiency and to minimize noble gas adsorption. Since the effect moisture has on silver zeolite filter efficiency is not known, Illinois Power Company will, if moisture is discovered in the sampler assembly, multiply the measured radioiodine concentrations by a factor of two to account for any drop in iodine collection efficiency.

(3) The postaccident noble gas effluent radiation monitoring system provided is not capable of measuring noble gas concentrations to ALARA levels, as required by NUREG-0737. However, CPS employs a normal range effluent radiation monitoring system which is capable of measuring concentrations to ALARA levels. This system is described in Subsections 7.7.1.19, 11.5.2.2.3 and 11.5.2.2.4. In postaccident conditions, CPS will use the noble gas monitoring channels of the postaccident monitoring system and the low range noble gas channels of the normal range monitoring system to cover the entire range of noble gas concentrations required by NUREG-0737.

(4) The noble gas effluent radiation monitoring channels are not capable of responding in Xe-133 equivalent concentrations for the duration of the accident. The reasons for this limitation are that the detectors have shown some energy dependency, and the energy spectrum of the postaccident effluent mix of nuclides changes with time because of radioactive decay.

The monitor response in μCi/cc of normal expected effluent mix will be converted to the units of Xe-133 equivalent concentrations by using time dependent graphical correction factors. The correction factors have been developed for each channel based with time zero corresponding to reactor shutdown from full power.

The design details of this monitoring system are described in Subsections 7.6.1.2.6 and 7.6.1.2.7.

c. Containment High-Range Radiation Monitor

CPS has installed redundant Containment High-Range Radiation Monitors and Indicators as specified by II.F.1, Attachment 3 of NUREG-0737 except as follows: (1) The response of the drywell radiation monitors was determined to be within ±20% over the range of 0.12 MeV to 3 MeV, as opposed to the range of 0.1 MeV to 3 MeV required by NUREG-0737. Further, these monitors underrespond to airborne radionuclides, because of their location within penetration sleeves. A time dependent correction factor will be applied to correct for their underresponse. (2) In-situ calibration of the drywell radiation monitors with a radiation source is not possible because of their location within penetration sleeves. Instead, calibration with a radiation source will be performed locally on the containment side of the penetration sleeve. The detectors will be removed from the sleeves for calibration, without disconnecting any electrical cables. The electronic calibration, however, will be performed with the detectors in their normal positions within the sleeves.

Indicators are located in the MCR. The design details of this monitoring system are described in Subsection 7.6.1.10.

d. Containment Pressure Monitor

CPS has provided for continuous measurement and indication of containment pressure over the range from -5 psig to three times the concrete containment design pressure (-5 to 45 psig). In addition, CPS has provided for a higher range containment pressure monitoring (40 to 80 psig) as described in Subsection 7.5.1.4.2.4(1b). Containment pressure is displayed and recorded in the main control room. The design details of this monitoring system are described in Subsection 7.5.1.4.2.4(1).

e. Containment Water Level Monitor

CPS has provided for continuous indication of suppression pool level over the range from the ECCS suction line inlets to more than 5 feet above the normal water level. The pool level indication is provided in the main control room. The design details of this monitoring system are described in Subsection 7.5.1.4.2.4 (4&5).

f. Containment Hydrogen Monitor

CPS has provided redundant hydrogen indicators in the control room. The capability covers the range of 0% to 30% hydrogen concentration by volume over a pressure range of -0.5 psig to 30 psig. These monitoring units have an accuracy of ±1.0% volume, which is judged to be acceptable. The design details of this monitoring system are described in Subsection 7.6.1.10.

NRC ACTION PLAN (NUREG-0660 as clarified by NUREG-0737)

II.F.2 Inadequate Core Cooling Instruments

NRC Position

Licensees shall provide a description of any additional instrumentation controls (primary or backup) proposed for the plant to supplement existing instrumentation (including primary coolant saturation monitors) in order to provide an unambiguous, easy-to-interpret indication of inadequate core cooling (ICC). A description of the functional design requirements for the system shall also be included. A description of the procedures to be used with the proposed equipment, the analysis used in developing these procedures, and a schedule for installing the equipment shall be provided.

CPS Response

The instrumentation provided at CPS is capable of detecting conditions indicative of inadequate core cooling. In response to this concern, Illinois Power Company jointly sponsored through the BWR Owners Group an evaluation of the use of these installed instruments for the detection of inadequate core cooling. The results of this evaluation are provided in NEDO-24708A, "Additional Information Required for NRC Staff Generic Report on Boiling Water Reactors" dated December 1980.

An analysis of core-exit thermocouples for BWR's was transmitted in "Regulatory Guide 1.97 (Draft 2 of Revision 2) - BWR Comments," dated August 4, 1980, from R. H. Buchholz, General Electric, to S. Duraiswamy, ACRS. Another analysis of core-exit thermocouples is given in a letter from D. B. Waters, Chairman BWR Owners Group, to D. G. Eisenhut, NRC, "BWR Emergency Procedures Guidelines Revision 1, and Responses to Related Questions," dated January 31, 1981. These analyses showed that core-exit thermocouples provide only marginally useful information to the reactor operator. Based upon this situation, Illinois Power Company does not currently plan to install incore thermocouples since it is believed that the existing instrumentation is capable of detecting inadequate core cooling.

In July of 1982, the BWROG submitted the results of their evaluation of BWR Water Level Measurement System (WLMS) designs to the NRC in the report SLI-8211, entitled "Review of BWR Reactor Vessel Water Level Measurement Systems," prepared by Sol Levy Inc. This report identified six major concerns associated with the performance of the WLMS. Recommendations were made within this report to address these concerns.

In addition to SLI-8211, Sol Levy Inc. prepared, for the BWROG, the report SLI-8218, entitled "Inadequate Core Cooling Detection in Boiling Water Reactors." This report provided an analysis of the relationship between reactor conditions and concluded that water level is a conclusive indicator of the adequacy of core cooling. A quantitative estimate of the core damage risk associated with failures in the WLMS, using probabilistic risk assessment (PRA) techniques showed that this risk is small. SLI-8218 therefore concluded that if the improvements to the WLMS identified in SLI-8211 were made and if adequate emergency procedures were provided to plant operators, then additional instrumentation to monitor for ICC is not warranted.

As a result of the NRC staff review of SLI-8211 and SLI-8218, Generic Letter 84-23 was issued.

Generic Letter 84-23, which addressed reactor vessel level instrumentation, was issued by the NRC on October 26, 1984. The generic letter identified three potential improvement categories including improvements to the plant that will reduce level indication errors caused by high drywell temperature, a review of plant experience relating to mechanical level indication equipment, and the potential for changes to the protection system logic to demonstrate compliance with the single failure criteria.

Illinois Power Company responded to Generic Letter 84-23 in a letter from F. A. Spangenberg to A. Schwencer dated December 5, 1984. The final report on the Clinton Power Station compliance with proposed upgrades to the Reactor Vessel Water Level Measurement System (WLMS) design was attached to the letter. This report provides a plant-specific evaluation of the Clinton WLMS.

In general, Illinois Power has addressed the three potential improvement categories listed in the generic letter as follows:

a. Improvements have been made to the WLMS design to significantly reduce errors caused by high drywell temperatures and associated sensing line fluid flashing under low Reactor Pressure Vessel pressure conditions. This was accomplished by reducing the vertical drop of selected sensing lines and relocation of sensing line flow restricting orifices in the drywell.

b. Level indication equipment for Clinton Power Station utilizes analog instead of mechanical instrumentation to improve reliability and accuracy.

c. Protection system logic was reviewed to demonstrate compliance with the single failure criteria. Reviews were also performed to determine the consequences of a break in a reference leg and a single failure in a protection system channel associated with an intact reference leg to assure that operator action is not required to mitigate the consequences of the event.

A detailed description of the modifications implemented in the Clinton WLMS design is contained in the final report.

The CPS plant specific evaluation and modifed WLMS design provided the bases for closure of this action plan item concerning detection of inadequate core cooling conditions.

NRC ACTION PLAN (NUREG-0660 as clarified by NUREG-0737)

II.G.1 Emergency Power for Pressurizer Equipment

NRC Position

Consistent with satisfying the requirements of General Design Criteria 10, 14, 15, 17, and 20 of Appendix A to 10 CFR Part 50 for the event of loss-of-offsite power, the following positions shall be implemented:

Power Supply for Pressurizer Relief and Block Valves and Pressurizer Level Indicators

(1) Motive and control components of the power-operated relief valves (PORVs) shall be capable of being supplied from either the offsite power source or the emergency power source when the offsite power is not available.

(2) Motive and control components associated with the PORV block valves shall be capable of being supplied from either the offsite power source or the emergency power source when the offsite power is not available.

(3) Motive and control power connections to the emergency buses for the PORVs and their associated block valves shall be through devices that have been qualified in accordance with safety-grade requirements.

(4) The pressurizer level indication instrument channels shall be powered from the vital instrument buses. The buses shall have the capability of being supplied from either the offsite power source or the emergency power source when offsite power is not available.

CPS Response

This requirement is not applicable to the Clinton Power Station BWR/6 design. It applies only to PWR-type reactors.

NRC ACTION PLAN (NUREG-0660 and listed in NUREG-0737)

II.K.1.5 Safety-Related Valve Position

NRC Position

a. Review all valve positions and positioning requirements and positive controls and all related test and maintenance procedures to assure proper ESF functioning, if required.

b. Verify that AFW valves are in open position.

CPS Response

a. Clinton Power Station is equipped with status monitoring that satisfies the requirements of Regulatory Guide 1.47. In addition to the status monitoring, Clinton Power Station Administrative Procedures assure that independent verification (or concurrent verification for throttled valves with a pre-determined valve position) of safety system line-ups is applied to valve and electrical line-ups for all equipment important to safety, to surveillance procedures, and to restoration following maintenance. Non-safety systems receive an alternative method of verification. Through these procedures, the Shift Manager's approval is required for the performance of surveillance tests and maintenance, including equipment removal from service and return to service.

   The above referenced procedures are available for review by Region III Division of Inspection and Enforcement.

   See Subsection 7.1.2 and 8.1.6 for additional information on status monitoring.

b. This requirement is not applicable to the Clinton Power Station BWR/6 design. It applies only to Babcock & Wilcox designed reactors.

NRC ACTION PLAN (NUREG-0660 and listed in NUREG-0737)

II.K.1.10 Operability Status

NRC Position

Review and modify (as required) procedures for removing safety-related systems from service (and restoring to service) to assure operability status is known.

CPS Response

Clinton Power Station Administrative Procedures assure that independent verification of safety system lineups is applied to valve and electrical line-ups for all equipment important to safety, to surveillance procedures, and to restoration following maintenance. The following are exceptions to Independent Verification, Concurrent Verification is required for: THROTTLED valves with a pre-determined valve position, Bus Metering and Potential Fuses. Non-safety systems receive an alternative method of verification. Through these procedures, the Shift Manager's approval is required for the performance of surveillance tests and maintenance, including equipment removal from service and return to service.

The above referenced procedures are available for review by the Region III Division of Inspection and Enforcement.

In addition to the above procedures, Clinton Power Station is equipped with status monitoring that satisfies the requirements of Regulatory Guide 1.47. This monitoring is described in Subsections 7.1.2 and 8.1.6.

NRC ACTION PLAN (NUREG-0694 and listed in NUREG-0737)

II.K.1.17 Pressurizer Low-Level Coincident Signal Bistables

NRC Position

For Westinghouse-designed reactors, trip the pressurizer low-level coincident signal bistables, so that safety injection would be initiated when the pressurizer low-pressure setpoint is reached regardless of the pressurizer level.

CPS Response

This requirement is not applicable to the Clinton Power Station BWR/6 design. It applies only to Westinghouse-designed reactors.

NRC ACTION PLAN (NUREG-0660 and listed in NUREG-0737)

II.K.1.20 Prompt Manual Reactor Trip

NRC Position*

Provide procedures and training to operating personnel for a prompt manual trip of the reactor for transients that result in a pressure increase in the reactor coolant system. These transients include:

a. Loss of main feedwater

b. Turbine trip

c. Main steam isolation valve closure

d. Loss of offsite power

e. Low OTSG level

f. Low pressurizer level

CPS Response

This requirement is not applicable to the Clinton Power Station BWR/6 design. It applies only to Babcock & Wilcox-designed reactors.

* This "Position" is taken from Item 4 of IE Bulletin 79-05B since it is not provided in detail in either NUREG-0660 or NUREG-0737.

NRC ACTION PLAN (NUREG-0660 and listed in NUREG-0737)

II.K.1.21 Automatic Safety-Grade Anticipatory Reactor Trip

NRC Position*

Provide for NRC approval a design review and schedule for implementation of a safety grade automatic anticipatory reactor scram for loss of feedwater, turbine trip, or significant reduction in steam generator level.

CPS Response

This requirement is not applicable to the Clinton Power Station BWR/6 design. It is applicable only to Babcock & Wilcox-designed reactors.

* This "Position" is taken from Item 5 of IE Bulletin 79-05B since it is not provided in detail in either NUREG-0660 or NUREG-0737.

NRC ACTION PLAN (NUREG-0694 and listed in NUREG-0737)

II.K.1.22 Auxiliary Heat Removal System Procedures

NRC Position

For boiling water reactors, describe automatic and manual actions for proper functioning of auxiliary heat removal systems when FW system is not operable.

CPS Response

If the main feedwater system is not operable, a reactor scram will be automatically initiated when reactor water level falls to Level 3.* The operator can then remote manually initiate the RCIC system from the main control room, or the system will be automatically initiated as hereinafter described. Reactor water level will continue to decrease due to boil-off until the low-low level setpoint, Level 2*, is reached. At this point, the high-pressure core spray (HPCS) and the reactor core isolation cooling (RCIC) system will be initiated to supply makeup water to the RPV. These systems will continue automatic injection until the reactor water level reached level 8*, at which time the HPCS injection valve is closed and the RCIC steam supply valve is closed.

In the nonaccident case, when the normal water level is reached, the HPCS system may be manually tripped (remotely from the Main Control Room) and the RCIC system can then be utilized to furnish subsequent makeup water to the RPV. In this case, the RCIC system flow controller may be adjusted and switched to manual operation (remotely from the Main Control Room). The RCIC system can be remote manually restarted by reopening the steam supply valve if the reactor water level is above Level 2*. If the reactor water level has reached Level 2*, the RCIC system would automatically restart as provided by the modification discussed in Action Plan Item II.K.3.13. This system then maintains the coolant makeup supply. RPV pressure is regulated by the automatic or remote manual operation of the main steam relief valves which blow down to the suppression pool.

* Corresponding levels:

Level	Height above vessel zero (in.)	Instrument reading above Instrument zero (15 inches above bottom of dryer skirt) (in.)
8	572.6	52.0
3	529.5	8.9
2	475.1	-45.5

To remove decay heat, the main steam relief valves can be utilized to dump the residual steam to the suppression pool. The suppression pool will then be cooled by remote manual alignment of the RHR system into the suppression pool cooling mode, which routes the pool water through the RHR heat exchangers, cools it, and returns it to the suppression pool in a closed cycle. Makeup water is still supplied by the RCIC system.

For the accident case with the RPV at high pressure, the HPCS system is utilized to automatically provide the required makeup flow. No manual operations are required. If the HPCS system is postulated to fail at these same conditions, the automatic depressurization system (ADS) will automatically initiate depressurization of the RPV to permit the low pressure ECCS (LPCI and LPCS) to provide makeup coolant.

Therefore, it can be seen that although manual actions can be taken to mitigate the consequences of a loss of feedwater, there are no manual actions which must be taken. Sufficient systems exist to automatically mitigate these consequences.

NRC ACTION PLAN (NUREG-0694 and listed in NUREG-0737)

II.K.1.23 Reactor Vessel Level Instrumentation

NRC Position

For boiling water reactors, describe all uses and types of reactor vessel level indication for both automatic and manual initiation of safety systems. Describe other instrumentation that might give the operator the same information on plant status.

CPS Response

The water level measurement for BWR/6 reactors is fully described in NEDO-24708A, "Additional Information Required for NRC Staff Generic Report on Boiling Water Reactors." An outline of this description is provided in the following paragraphs.

Figure 7.7-1 illustrates the reactor vessel elevations covered by each water-level range. The instruments that sense the water level are differential pressure devices calibrated to be accurate at a specific vessel pressure and liquid temperature condition. The following is a description of each water-level range.

a. Shutdown water-level range: This range is used to monitor the reactor water-level during the shutdown condition when the reactor system is flooded for maintenance and head removal. The vessel temperature and pressure conditions that are used for the calibration are 0 psig and 120° F water in the vessel and 80° F in the drywell. The reference leg instrument line penetrates the drywell in two places: (a) vessel to seal drywell penetration, and (b) just above the main steam line nozzle elevation. The variable by instrument tap is just below the bottom of the dryer skirt.

b. Upset water-level range: This range is used to monitor the reactor water when the level of the water goes off the narrow-range scale on the high side. The design and vessel tap location are the same as outlined above. The instrument is calibrated for saturated water and steam conditions at 1025 psig in the vessel and 135° F in the drywell.

c. Narrow water-level range: This range uses for its RPV taps the elevation below the steam line nozzle skirt and the taps at an elevation near the bottom of the dryer skirt. The reference zero of the instrument is 15" above the bottom of the dryer skirt. The instruments are calibrated the same as the Upset Water Level Range. The feedwater control system uses this range for water-level control and indication inputs.

d. Wide water-level range: This range uses for its RPV taps the elevation below the steam line nozzle and the taps at an elevation near the top of the active fuel. The reference zero of the instrument is 15" above the bottom of the dryer skirt. The instruments are calibrated for 1025 psig in the vessel, 135° F in the drywell and 20 BTU/lb subcooling below the middle water level nozzle with no jet pump

flow. These instruments provide inputs to various safety systems and engineered safeguards systems.

e. Fuel-zone, water-level range: This range uses for its RPV taps the elevation near the bottom of the dryer skirt and the taps at the jet pump diffuser skirt. The fuel zone level indicator has two reference zero points: (a) top of active fuel, and (b) fifteen inches above the bottom of the dryer skirt. The instruments are calibrated for saturated water and steam conditions at 0 psig and 212° F in the vessel and 135° F in the drywell with no jet pump flow. These instruments provide input to water-level indication and recorder.

There are common condensate reference chambers for the narrow-range and wide-range water-level ranges.

The elevation drop from RPV penetration to the drywell penetration is uniform for the narrow range and wide range waterlevel instrument lines in order to minimize the change in waterlevel with changes in drywell temperature.

Reactor water-level instrumentation that initiates safety systems and engineered safeguards is shown in Drawing 796E724, sheet 6.

NRC ACTION PLAN (NUREG-0660 as clarified by NUREG-0737)

II.K.2.2 Control of Auxiliary Feedwater Independent of the Integrated Control System

NRC Position

For Babcock & Wilcox (B&W)-designed reactors, provide procedures and training to initiate and control auxiliary feedwater independent of the integrated control system (ICS).

CPS Response

This requirement is not applicable to the Clinton Power Station BWR/6 design. It applies only to Babcock & Wilcox-designed reactors.

NRC ACTION PLAN (NUREG-0660 as clarified by NUREG-0737)

II.K.2.9 Failure Mode Effects Analysis on the Integrated Control System

NRC Position

For Babcock & Wilcox (B&W)-designed reactors provide a failure-mode-and-effects analysis (FMEA) of the integrated control system (ICS).

CPS Response

This requirement is not applicable to the Clinton Power Station BWR/6 design. It applies only to Babcock & Wilcox-designed reactors.

NRC ACTION PLAN (NUREG-0660 as clarified by NUREG-0737)

II.K.2.10 Safety-Grade Anticipatory Reactor Trip

NRC Position

For Babcock & Wilcox (B&W)-designed reactors, install safety-grade, anticipatory reactor trip (ART) on loss-of-feedwater and turbine trip.

CPS Response

This requirement is not applicable to the Clinton Power Station BWR/6 design. It applies only to Babcock & Wilcox-designed reactors.

NRC ACTION PLAN (NUREG-0660 as clarified by NUREG-0737)

II.K.2.13 Thermal Mechanical Report--Effect of High-Pressure Injection on Vessel Integrity for Small-Break Loss-of-Coolant Accident with No Auxiliary Feedwater

NRC Position

A detailed analysis shall be performed on the thermal-mechanical conditions in the reactor vessel during recovery from small breaks with an extended loss of all feedwater.

CPS Response

This requirement is not applicable to the Clinton Power Station BWR/6 design. It applies only to PWR-type reactors.

NRC ACTION PLAN (NUREG-0660 and listed in NUREG-0737)

II.K.2.14 Demonstrate that Predicted Lift Frequency of Power-Operated Relief Valves is Acceptable

NRC Position*

For B&W-designed reactors, demonstrate that the power-operated relief valves on the pressurizer will open in less than five percent of all anticipated overpressure transients using revised setpoints and anticipatory trips for the range of plant conditions which might occur during a fuel cycle.

CPS Response

This requirement is not applicable to the Clinton Power Station BWR/6 design. It applies only to Babcock & Wilcox-designed reactors.

* This "Position" is taken from D. F. Ross' letter, dated August 21, 1979, to all B&W operating plants since it was not provided in detail in either NUREG-0660 or NUREG-0737.

NRC ACTION PLAN (NUREG-0660 as clarified by NUREG-0737)

II.K.2.15 Effects of Slug Flow on Steam Generator Tubes

NRC Position

Although the staff believed that the potential for slug flow was not great in Babcock and Wilcox (B&W) plants because of the venting path provided by the internal vent valves, the staff required that a confirmatory evaluation of the effects of slug flow on steam generator tubes be performed by the licensees to assure that the tubes could withstand any mechanical loading which could result from slug flow.

CPS Response

This requirement is not applicable to the Clinton Power Station BWR/6 design. It applies only to Babcock & Wilcox-designed reactors.

NRC ACTION PLAN (NUREG-0660 as clarified by NUREG-0737)

II.K.2.16 Reactor Coolant Pump Seal Damage

NRC Position

Evaluate the impact of reactor coolant pump seal damage and leakage due to loss-of-seal cooling upon loss of offsite power. If damage cannot be precluded, licensees should provide an analysis of the limiting small-break loss-of-coolant accident (LOCA) with subsequent reactor coolant pump (RCP) seal damage.

CPS Response

This requirement is not applicable to the Clinton Power Station BWR/6 design. It applies only to Babcock & Wilcox-designed reactors.

NRC ACTION PLAN (NUREG-0660 as clarified by NUREG-0737)

II.K.2.17 Potential for Voiding in the Reactor Coolant System During Transients

NRC Position

Analyze the potential for voiding in the reactor coolant system (RCS) during anticipated transients.

CPS Response

This requirement is not applicable to the Clinton Power Station BWR/6 design. It applies only to PWR-type reactors.

NRC ACTION PLAN (NUREG-0660 as clarified by NUREG-0737)

II.K.2.19 Sequential Auxiliary Feedwater Flow Analysis

NRC Position

Provide a benchmark analysis of sequential auxiliary feedwater (AFW) flow to the steam generators following a loss of main feedwater.

CPS Response

This requirement is not applicable to the Clinton Power Station BWR/6 design. It applies only to PWR-type reactors.

NRC ACTION PLAN (NUREG-0660 as clarified by NUREG-0737)

II.K.3.1 Installation and Testing of Automatic Power-Operated Relief Valve Isolation System

NRC Position

All PWR licensees should provide a system that uses the PORV block valve to protect against a small-break loss-of-coolant accident. This system will automatically cause the block valve to close when the reactor coolant system pressure decays after the PORV has opened. Justification should be provided to assure that failure of this system would not decrease overall safety by aggravating plant transients and accidents.

Each licensee shall perform a confirmatory test of the automatic block valve closure system following installation.

CPS Response

This requirement is not applicable to the Clinton Power Station BWR/6 design. It applies only to PWR-type reactors.

NRC ACTION PLAN (NUREG-0660 as clarified by NUREG-0737)

II.K.3.2 Report on Overall Safety Effect of Power-Operated Relief Valve Isolation System

NRC Position

1. The licensee should submit a report for staff review documenting the various actions taken to decrease the probability of a small-break loss-of-coolant accident (LOCA) caused by a stuck-open power-operated relief valve (PORV) and show how those actions constitute sufficient improvements in reactor safety.

2. Safety-valve failure rates based on past history of the operating plants designed by the specific nuclear steam supply system (NSSS) vendor should be included in the report submitted in response to (1) above.

CPS Response

This requirement is not applicable to the Clinton Power Station BWR/6 design. It applies only to PWR-type reactors.

NRC ACTION PLAN (NUREG-0660 and listed in NUREG-0737)

II.K.3.3 Reporting Safety and Relief Valve Failures Promptly and Challenges Annually

NRC Position*

All future safety and relief valve challenges and failures should be reported to the NRC. This should include the prompt reporting of failures through Unusual Event Reports and the reporting of challenges in the annual report.

CPS Response

Failures of primary system relief or safety valves to close will be reported to the NRC via the Licensee Event Report System. All challenges to primary system relief and safety valves occurring during the year will be provided in the monthly and annual reports.

* This "Position" is taken from NUREG-0626 since it is not provided in detail in either NUREG-0660 or NUREG-0737.

NRC ACTION PLAN (NUREG-0660 as clarified by NUREG-0737)

II.K.3.5 Automatic Trip of Reactor Coolant Pumps During Loss-of-Coolant Accident

NRC Position

Tripping of the reactor pumps in case of a loss-of-coolant accident (LOCA) is not an ideal solution. Licensees should consider other solutions to the small-break LOCA problem (for example, an increase in safety injection flow rate). In the meantime, until a better solution is found, the reactor coolant pumps should be tripped automatically in case of a small-break LOCA. The signals designated to initiate the pump trip are discussed in NUREG-0623.

CPS Response

This requirement is not applicable to the Clinton Power Station BWR/6 design. It applies only to PWR-type reactors.

NRC ACTION PLAN (NUREG-0660 as clarified by NUREG-0737)

II.K.3.7 Evaluation of Power-Operated Relief Valve Opening Probability During Overpressure Transient

NRC Position

Most overpressure transients should not result in the opening of the power-operated relief valve (PORV). Therefore, licensees should document that the PORV will open in less than 5% of all anticipated overpressure transients using the revised setpoints and anticipatory trips for the range of plant conditions which might occur during a fuel cycle.

CPS Response

This requirement is not applicable to the Clinton Power Station BWR/6 design. It applies only to Babcock & Wilcox-designed reactors.

NRC ACTION PLAN (NUREG-0660 as clarified by NUREG-0737)

II.K.3.9 Proportional Integral Derivative Controller Modification

NRC Position

The Westinghouse-recommended modification to the proportional integral derivative (PID) controller should be implemented by affected licensees.

CPS Response

This requirement is not applicable to the Clinton Power Station BWR/6 design. It applies only to Westinghouse-designed reactors.

NRC ACTION PLAN (NUREG-0660 as clarified by NUREG-0737)

II.K.3.10 Proposed Anticipatory Trip Modifications

NRC Position

The anticipatory trip modification proposed by some licensees to confine the range of use to high-power levels should not be made until it has been shown on a plant-by-plant basis that the probability of a small-break, loss-of-coolant accident (LOCA) resulting from a stuck-open, power-operated relief valve (PORV) is substantially unaffected by the modification.

CPS Response

This requirement is not applicable to the Clinton Power Station BWR/6 design. It applies only to selected Westinghouse-designed reactors.

NRC ACTION PLAN (NUREG-0660 and listed in NUREG-0737)

II.K.3.11 Justification for Use of Certain Power-Operated Relief Valves

NRC Position*

Any plant using or planning to use this valve (A power-operated relief valve by Control Components, Inc.) without modification should provide complete justification for such use in light of this failure (failure to close at the McGuire Station). This matter should be addressed on a plant-by-plant basis. The valve should be modified as recommended by the manufacturer and tested. Plants using this valve (modified or unmodified) should record each valve actuation and each valve failure. Failures must be reported to the Nuclear Regulatory Commission. The licensee must compare such failure with those of Copes-Vulcan valves with a view toward further modification or replacement, as necessary.

CPS Response

Clinton Power Station (CPS) does not utilize the Control Components, Inc. power-operated relief valve.

* This "Position" is taken from NUREG-0611 since it is not provided in detail in either NUREG-0660 or NUREG-0737.

NRC ACTION PLAN (NUREG-0660 as clarified by NUREG-0737)

II.K.3.12 Confirm Existence of Anticipatory Reactor Trip Upon Turbine Trip

NRC Position

Licensees with Westinghouse-designed operating plants should confirm that their plants have an anticipatory reactor trip upon turbine trip. The licensee of any plant where this trip is not present should provide a conceptual design and evaluation for the installation of this trip.

CPS Response

An anticipatory reactor trip is incorporated into the Clinton Power Station BWR/6 design. A reactor trip is initiated on turbine stop valve closure and turbine control valve fast closure.

See Subsection 7.2.1.1.4.2 for additional information.

NRC ACTION PLAN (NUREG-0737)

II.K.3.13 Separation of HPCI and RCIC System Initiation Levels

NRC Position

Currently, the reactor core isolation cooling (RCIC) system and the high pressure coolant injection (HPCI) system both initiate on the same low water level signal and both isolate on the same high water level signal. The HPCI System will restart on low water level, but the RCIC system will not. The RCIC system is a low-flow system when compared to the HPCI system. The initiation levels of the HPCI and RCIC system should be separated so that the RCIC system initiates at a higher water level than the HPCI system. Further, the RCIC system initiation logic should be modified so that the RCIC system will restart on low water level. These changes have the potential to reduce the number of challenges to the HPCI system and could result in less stress on the vessel from cold water injection. Analyses should be performed to evaluate these changes. The analyses should be submitted to the NRC staff and changes should be implemented if justified by the analysis.

CPS Response

The response to this task will be divided into two parts: the first response will address the need to separate the RCIC and HPCS initiation level, and the second response will address the need to provide an auto-restart feature for the RCIC system. The HPCS system replaces the HPCI system for the BWR/5 and 6 Product line. The above referenced BWR Owner's Group analysis addresses the use of both systems.

Evaluation of HPCS and RCIC Initiation Level

In response to this requirement, Illinois Power Company jointly sponsored through the BWR Owners' Group a program to evaluate this concern. The results of this program were submitted to the NRC via a letter from R. H. Buchholz, General Electric Company, to D. G. Eisenhut, Director of NRC, dated October 1, 1980. Illinois Power Company endorses the results of this study.

The conclusion drawn from this analysis is that the separation of HPCS and RCIC initiation setpoints is unnecessary for safety considerations. The basis for this conclusion, as described in the above referenced letter is that for rapid level changes associated with accident scenarios and severe transients, their initiation would be essentially simultaneous in that possible separation distances could not preclude HPCS challenges; likewise, for slow level changes due to small leaks or slow transients, adequate time exists for manual initiation of RCIC by the reactor operator, prior to HPCS auto-initiation.

As a result of the above challenges, thermal stresses will occur in the reactor vessel and its internals. The most severe thermal cycle due to RCIC and HPCS initiation at the current low water level was assessed and compared to the thermal cycle analysis for the limiting reactor components. Furthermore, operating plant experience was evaluated to estimate the frequency of occurrence of HPCS and RCIC initiations. Based on this evaluation, it was concluded that the current design is satisfactory, and a significant reduction in thermal cycles is not necessary.

Evaluation of Proposed Auto-Restart of RCIC

In response to this requirement, Illinois Power Company jointly sponsored through the BWR Owners' Group a program to evaluate this concern and develop an appropriate modification. The results of this program were submitted to the NRC via a letter from D. B. Waters, Chairman of BWR Owners' Group, to D. G. Eisenhut, Director of NRC, dated December 29, 1980.

An evaluation of modifications to the RCIC system to allow automatic restart following a trip of the system at high RPV water level was conducted. The evaluation of the automatic restart indicates that it would contribute to improved system reliability and that it could be accomplished without adverse effects on system function and plant safety. Illinois Power Company has implemented an RCIC automatic restart modification on the Clinton Power Station.

The modification consists of the relocation of the existing high vessel level trip function from the RCIC turbine trip valve to the RCIC steam supply valve. This signals the RCIC steam supply valve to close when the high reactor vessel water level is attained. Closure of the RCIC steam supply valve also automatically resets many of the functions that allow RCIC to restart when low vessel water level is reached.

Any adverse effects due to increased system complexity are more than offset by the increased safety, reliability and availability created by the change. This modification enables RCIC to restart on low vessel level (Level 2) because the logic resets or aligns the RCIC valving for startup. Formerly, this reset was accomplished manually. This reset condition is indicated on an annunciator in the control room.

The initiating circuits for the RCIC system are described in Subsection 7.4.1.1.3.2.

NRC ACTION PLAN (NUREG-0660 as clarified by NUREG-0737)

II.K.3.15 Modify Break Detection Logic to Prevent Spurious Isolation of HPCI and RCIC

NRC Position

The high-pressure coolant injection (HPCI) and reactor core isolation cooling (RCIC) systems use differential pressure sensors on elbow taps in the steam lines to their turbine drives to detect and isolate pipe breaks in the systems. The pipe-break-detection circuitry has resulted in spurious isolation of the HPCI and RCIC systems due to the pressure spike which accompanies startup of the systems. The pipe-break-detection circuitry should be modified so that pressure spikes resulting from HPCI and RCIC system initiation will not cause inadvertent system isolation.

CPS Response

The BWR/6 design at Clinton Power Station does not utilize the turbine-driven HPCI system but rather the motor-driven HPCS system for high pressure coolant injection. Hence, the only system impacted by this proposed modification is the turbine driven RCIC system.

In response to this requirement, Illinois Power Company jointly sponsored through the BWR Owners' TMI Group a program to evaluate the inadvertent trip concern and develop an appropriate modification.

As a result of this generic program, the Clinton Plant design includes a provision for the prevention of spurious isolation of the RCIC system as a result of pressure spikes which may occur during start-up of that system. This involves installation of a 3 second solid state time delay in the isolation logic which will avoid the RCIC isolation due to any short duration pressure spikes during system startup. This time delay is short enough such that for postulated system pipe breaks, the system will isolate in time to prevent unacceptable radiological releases to the environment. Releases due to a 3 second time delay will still be less than the design basis conditions and within existing safety analyses.

Figure D-1 shows a portion of the RCIC elementary diagram which was changed when the time delay device was added to the existing isolation logic. Figure D-2 summarizes in schematic form the sequence of events that will occur during the starting of the RCIC system with the time delay added. The timer will be started when the flow rate sensed by elbow flow sensors exceeds the trip setpoint. At the end of the timer period, system isolation will occur only if the flow sensors are still reading at or above the trip setpoint. As demonstrated in Figure D-2, this will ensure that isolation of a pipe break will occur.

It is noted that the RCIC system has two break detection circuits each of which controls one of the two isolation valves. Both circuits have been modified in order to successfully implement this change.

The instrumentation for isolation of the RCIC system is listed in Subsection 7.4.1.1.3.6.

NRC ACTION PLAN (NUREG-0660 as clarified by NUREG-0737)

II.K.3.16 Reduction of Challenges and Failures of Relief Valves - Feasibility Study and System Modification

NRC Position

The record of relief-valve failures to close for all boiling-water reactors (BWRs) in the past 3 years of plant operation is approximately 30 in 73 reactor-years (0.41 failures per reactor-year). This has demonstrated that the failure of a relief valve to close would be the most likely cause of a small-break loss-of-coolant accident (LOCA). The high failure rate is the result of a high relief-valve challenge rate and a relatively high failure rate per challenge (0.16 failures per challenge). Typically, five valves are challenged in each event. This results in an equivalent failure rate per challenge of 0.03. The challenge and failure rates can be reduced in the following ways:

1. Additional anticipatory scram on loss of feedwater,
2. Revised relief-valve actuation setpoints,
3. Increased emergency core cooling (ECC) flow,
4. Lower operating pressures,
5. Earlier initiation of ECC systems,
6. Heat removal through emergency condensers,
7. Offset valve setpoints to open fewer valves per challenge,
8. Installation of additional relief valves with a block-or isolation-valve feature to eliminate opening of the safety/relief valves (SRV's), consistent with the ASME Code,
9. Increasing the high steam line flow setpoint for main steam line isolation valve (MSIV) closure,
10. Lowering the pressure setpoint for MSIV Closure,
11. Reducing the testing frequency of the MSIV's,
12. More stringent valve leakage criteria, and
13. Early removal of leaking valves.

An investigation of the feasibility and contraindications of reducing challenges to the relief valves by use of the aforementioned methods should be conducted. Other methods should also be included in the feasibility study. Those changes which are shown to reduce relief-valve challenges without compromising the performance of the relief valves or other systems should be implemented. Challenges to the relief valves should be reduced substantially (by an order of magnitude).

CPS Response

In response to this requirement, Illinois Power Company jointly sponsored through the BWR Owners' Group a feasibility study to reduce the challenges and failures of SRV's. The results of this feasibility study were submitted via a letter from D. B. Waters, Chairman of BWR Owners' Group, to D. G. Eisenhut, Director of NRC, dated March 31, 1981. This study reviewed potential methods of reducing the likelihood of stuck open relief valve (SORV) events in BWR's and estimated the reduction in such events that could be achieved by implementing these methods. The reduction was estimated by computing the reduction in SRV actuations achievable by various design and operating modifications, and by estimating the relative probability of various types of SRVs (including Dikkers valves) to stick open. Using the BWR/4 plant as a measure of operating experience, the study concluded that BWR/6 plants already include design features which yield a significant reduction in the occurrence of SORV events such that no further design changes are necessary.

For the Clinton Power Station, which has a solid state logic design, the likelihood of an Inadvertently Opened Relief Valve (IORV) is higher than the BWR/6 design evaluated in connection with the Owners' Group report. A design modification has been implemented such that the frequency of IORV with solid state logic becomes low enough so as to achieve the order of magnitude reduction in total SRV challenge rate required by NUREG-0737.

The original design and the design modification are discussed below.

Original Design

Figure D-6 is a simplified diagram showing the various elements of the solid state logic design which defined the control function for the safety/relief valves in the ADS and pressure relief modes. These valves open when either the A or B solenoid are energized. Figure D-6 shows the design for the A solenoid only. The design for the B solenoid is similar.

Each solenoid was powered by a single DC load driver located on cards within the Nuclear System Protection System (NSPS) cabinet. These load driver cards receive signals to power the solenoids from various Logic Cards also located in the NSPS cabinet. Logic Card 2 A/B and Logic Card 3 A/B provide "And Gate Logics". Logic Card 2 A/B is for the SRV in the ADS and pressure relief modes. Logic Card 3 A/B is for the SRV in the pressure relief mode only.

With this design, it was possible for a failure in one of the DC load driver cards to cause the associated solenoid to become energized which would result in that SRV opening.

The pressure relief and the ADS function were each provided by redundant input signals shown in as A or E. The redundant pressure relief function signals were each fed to Logic Card 5; and from Logic Card 5, to four Logic Cards (3A, 3B, 2A, and 2B). Each of these Logic Cards in turn served four SRV's. A single failure of any of the cards could have caused opening of its associated SRV's. For example, a single failure in Logic Card 3A could have caused the opening of the four SRV's associated with that card. A single failure in Logic Card 5 could have caused the simultaneous opening of all SRV's.

The redundant input which provides the ADS function is similarly supplied to Logic Cards 1 and 6. The output from Logic Card 1 was fed to Logic Card 2A and 2B which operated the SRV in the ADS mode. As with the pressure relief function, a single failure in Logic Card 2A or 2B

could have caused opening of four ADS valves and a single failure in Logic Card 1 or 6 could have caused the opening of all ADS valves.

Design Modification

The design modification is such that no single logic or load driver card failure within the NSPS will actuate the ADS or open a single or multiple SRV in the ADS or pressure relief mode. The modification separates the redundant ADS and pressure relief function input onto separate and redesigned Logic Cards such that single failures in these Logic Cards could not cause an inadvertent opening of the relief valves. A separate DC load driver is also provided for each of these inputs (A or E) such that single load driver failures will not cause an inadvertent opening of an SRV. Figure D-7 shows the simplified diagram of these changes to the solid state logic design.

The ADS and pressure relief functions are unchanged by this design modification and the logic remains the same. The modifications simply isolated the various inputs on separate logic cards. From a hardware standpoint, the modifications required replacement of Logic Cards 1 and 6 with new cards containing the separated input. An additional card was needed to separate the pressure relief function input currently on Card 5. Logic Cards 2 and 3 were replaced with redesigned cards which contain the separated logic. By providing potential output to eight relief valves rather than the four valves in the original design, the same number of Logic Cards 2 and 3 were retained in the modified design. Finally, new additional DC load driver cards were required for each of the relief valves.

The NSPS cabinet wiring was modified to accommodate the new or revised Logic Cards. The seismic and environmental qualifications of the revised cards and of the NSPS cabinet were considered in the design.

With this modification to the Clinton Power Station, the objectives of NUREG-0737 Item II.K.3.16 are satisfied. Plant modifications are reflected in Section 7.3.

NRC ACTION PLAN (NUREG-0660 as clarified by NUREG-0737)

II.K.3.17 Report on Outages of Emergency Core-Cooling Systems Licensee Report and Proposed Technical Specification Changes

NRC Position

Several components of the emergency core-cooling (ECC) systems are permitted bv technical specifications to have substantial outage times (e.g., 72 hours for one diesel-generator; 14 days for the HPCI system). In addition, there are no cumulative outage time limitations for ECC systems. Licensees should submit a report detailing outage dates and lengths of outages for all ECC systems for the last 5 years of operation. The report should also include the causes of the outages (i.e., controller failure, spurious isolation).

CPS Response

CPS will comply with reporting requirements for ECC systems outages via its participation in the Equipment Performance and Information Exchange System (EPIX). This system requires that component failure data and system reliability data be reported for all systems important to safety.

Significant problems with ECC systems will be reported to the NRC in accordance with lOCFR50.73.

NRC ACTION PLAN (NUREG-0660 as clarified by NUREG-0737)

II.K.3.18 Modification of Automatic Depressurization System Logic - Feasibility for Increased Diversity for Some Event Sequences

NRC Position

The automatic depressurization system (ADS) actuation logic should be modified to eliminate the need for manual actuation to assure adequate core cooling. A feasibility and risk assessment study is required to determine the optimum approach. One possible scheme that should be considered is ADS actuation on low reactor-vessel water level provided no high-pressure coolant injection (HPCI) or high-pressure coolant system (HPCS) flow exists and a low-pressure emergency core cooling (ECC) system is running. This logic would complement, not replace, the existing ADS actuation logic.

CPS Response

In response to this requirement, Illinois Power Company jointly sponsored through the BWR Owners' Group (BWROG) a program to evaluate feasible modifications to the ADS logic. The original study was submitted to the NRC via a letter from D. B. Waters (BWROG) to D. G. Eisenhut (NRR), dated March 31, 1981. This study evaluated the feasibility of automating the vessel depressurization for isolation events with and without a stuck-open relief valve, and assessed the changes in overall plant risk. This study identified two preferred ADS logic design modifications but did not consider the effects of those modifications on proposed designs for ATWS mitigation and on execution of procedures, developed from the BWR Emergency Procedure Guidelines (EPG's).

To respond to these additional concerns the BWROG provided a report to the NRC, via a letter from T. J. Dente (BWROG) to D. G. Eisenhut (NRR), dated October 28, 1982, which supplemented the previous feasibility study. This study developed and compared eight different ADS modifications which would extend ADS operation to transient events which do not result in a release of steam to the drywell but which may require depressurization of the reactor pressure vessel (RPV) to maintain adequate core cooling. In addition, these ADS modification options conformed the ADS initiation logic to that employed in the EPG's and that currently proposed for certain ATWS modifications.

As a result of their review of these BWROG reports, the NRC has indicated that two of the proposed ADS modification options are acceptable as means of resolving TMI Action Plan Item II.K.3.18. The two acceptable ADS modifications are as follows:

(1) the addition of a bypass timer to the high drywell pressure trip if reactor water level remains below the low pressure ECCS initiation setpoint for a sustained period; or

(2) elimination of the high drywell pressure trip.

Of the two acceptable ADS modifications, Illinois Power Company implemented Option #1, as described above, at the Clinton Power Station.

The option chosen for CPS bypasses the high drywell pressure portion of the current ADS logic after a specific time interval and adds a manual switch which allows the operator to inhibit automatic ADS initiation during postulated ATWS scenarios if required. Figure D-5 shows the CPS logic design for this alternative. The high drywell pressure signal (2 psig) is bypassed by installing a second ("bypass") timer (6-minute) that is actuated on low RPV water level (Level 1). When this timer and the 105-second timer time out, the high drywell pressure trip is bypassed and the ADS will initiate on the low RPV water level signal alone. The additional logic would not affect the high drywell pressure--low RPV level initiation sequence insofar as it responds to pipe breaks inside the drywell.

A nominal time delay of six minutes for the high drywell pressure bypass logic was chosen, consistent with the calculated analytic limit. The detailed analysis performed was based on (1) avoidance of excessive fuel cladding heatup using 10CFR50 Appendix K models and the most limiting transient described in Subsection 6.3.3, and (2) providing sufficient time to allow recovery of RPV water level above Level 1 during an ATWS event. Once the bypass timer and the 105-second timer time out, the ADS initiation is sealed in, and the system does not automatically reset. The system may be manually reset when initiation conditions are removed. Also refer to Subsection 7.3.1.1.1.4.

The advantage of adding the manual ADS inhibit switch is that it simplifies the execution of those steps in the EPG's related to ATWS mitigation. Thus the ability of the control room operator to inhibit the ADS when desired is enhanced. The other modification to the ADS initiation logic, i.e. incorporation of the high drywell pressure bypass, does not significantly impact the simplicity or probability of accomplishment of the operator actions specified in the EPG's.

NRC ACTION PLAN (NUREG-0660 as clarified by NUREG-0737)

II.K.3.21 Restart of Core Spray and Low-Pressure Coolant-Injection Systems

NRC Position

The core spray and LPCI system flow may be stopped by the operator. These systems will not restart automatically on loss of water level if an initiation signal is still present. The core spray and LPCI system logic should be modified so that these systems will restart if required to assure adequate core cooling. Because this design modification affects several core cooling modes under accident conditions, a preliminary design should be submitted for staff review and approval prior to making the actual modification.

CPS Response

The NRC has suggested certain modifications to the BWR LPCS and LPCI systems provided as part of the BWR ECCS network. These NRC suggestions center on control system logic modifications that would provide automatic restart capability following manual termination of system operation. General Electric and the BWR Owners' Group have reviewed this issue on a generic basis and do not believe the NRC suggestions are required for plant safety considerations. Justification is provided in the December 29, 1980, BWR Owners' Group submittal to the NRC. This conclusion is based on the adequacy of the current ECCS logic design coupled with the potentially negative impact on overall safety of the proposed changes. For the low pressure ECCS, these negative impacts include a significant escalation of control system complexity and restricted operator flexibility when dealing with anticipated events. Therefore, we conclude that no modifications be made to the low pressure ECCS with respect to automatic restart.

The NRC suggestions center on incorporating additional control system logic to provide automatic system restart from a low reactor water-level signal following actions by the operators to terminate system operation. The NRC concern is that the reactor operators may terminate ECCS operation when a high reactor water level condition exists but may neglect to reinitiate the systems if a low level condition recurs.

General Electric and the BWR Owners' Group have reviewed the current LPCS and LPCI systems and have concluded that overall BWR safety would not be enhanced by the type of control system modification suggested by the NRC. Again, justification for this conclusion is provided on the BWR Owners' Group December 29, 1980 submittal to the NRC staff. A full understanding of the significance of LPCS and LPCI logic changes must be based on a recognition that these systems are part of the interdependent BWR ECCS network; any changes in one system must consider the possible interactive effects among the other systems making up the overall ECCS network. This must also include the potential impact on supporting systems such as the standby power supplies and the shutdown service water system.

General Electric and the BWR Owners' Group believe that the High Pressure Core Spray (HPCS) system is fully adequate and no design changes are required on a basis of any safety considerations. Although there are relatively straightforward HPCS design modifications that would automate the restart of HPCS on low water level following its trip by the operator, CPS believes that such modifications are not necessary. This conclusion is based on a combination

of factors that includes the comprehensive nature of BWR operator training, the emphasis placed in this training on reactor water level control, the Emergency Procedure Guidelines, the relatively long time the operator has to correct errors and the extent to which low reactor water level conditions are displayed and alarmed in the control room. The modifications would be undesirable from the standpoint of reduced operator flexibility (i.e., there may be situations where the operator would not want the HPCS to restart, such as in the case of HPCS equipment problems).

On the basis of the foregoing discussion, the restart logic for the LPCS, HPCS, and LPCI will not be modified.

NRC ACTION PLAN (NUREG-0660 as clarified by NUREG-0737)

II.K.3.22 Automatic Switchover of Reactor Core Isolation Cooling System Suction--Verify Procedures and Modify Design

NRC Position

The reactor core isolation cooling (RCIC) system takes suction from the condensate storage tank with manual switchover to the suppression pool when the condensate storage tank level is low. This switchover should be made automatically. Until the automatic switchover is implemented, licensees should verify that clear and cogent procedures exist for the manual switchover of the RCIC system suction from the condensate storage tank to the suppression pool.

CPS Response

The RCIC system includes an automatic switchover feature which will change the pump suction source from the RCIC storage tank to the suppression pool. The safety-grade switchover will occur upon receipt of a low-level signal from the RCIC storage tank or a high-level signal from the suppression pool.

See Subsections 5.4.6.1 and 7.4.1.1.3.6 for additional information.

NRC ACTION PLAN (NUREG-0660 as clarified by NUREG-0737)

II.K.3.24 Confirm Adequacy of Space Cooling for High Pressure Coolant Injection and Reactor Core Isolation Cooling Systems

NRC Position

Long-term operation of the RCIC and HPCI systems may require space cooling to maintain the pump room temperatures within allowable limits. Licensees should verify the acceptability of the consequences of a complete loss of alternating current power. The RCIC and HPCI systems should be designed to withstand complete loss of alternating current power to their support systems, including coolers, for at least 2 hours.

CPS Response

In a discussion with the NRC as documented by the letter from D.B. Waters, Chairman of BWR Owner's Group, to D.G. Eisenhut, Director of Licensing (NRC), dated January 23, 1981, it was indicated that the NRC intended for the above action plan task to consider loss of offsite power and not loss of emergency power.

CPS utilizes an integral heat-recovery HVAC concept for normal operations. Additionally, the plant employs a cubicle arrangement for physical, electrical and environmental separation of each ECC and RCIC systems. Each cubicle has an independent emergency area cooling system. The HPCS cubicle has two 50% area coolers with the remaining ECCS cubicle having one 100% area cooler.

These ECC and RCIC equipment area cooling trains are designated as engineered safety features (ESF). They are sized for abnormal and accident conditions to maintain ECC and RCIC system equipment within allowable limits (148° F) following a LOCA. The heat sink for these cooling trains is shutdown service water which itself is a safety-grade system.

If it is assumed that only offsite power is lost, area cooling for the ECC and RCIC system equipment would not be lost because the motive power supply for each ECC and RCIC subsystem is from essential power buses with control circuits energized from the same essential bus. Instrument power is from Class 1E sources. Divisionalization of ECCS functions, e.g., HPCS in Division 3, LPCS and LPCI "A" in Division 1, LPCI "B&C" in Division 2, includes the essential power to the corresponding ECCS equipment area cooling system. This makes each subsystem independent and because each ECC and RCIC system has a redundant functional equivalent, the loss of a particular ECCS or its cubicle or its equipment area cooling system, does not preclude the essential safety function. In such a case, the essential safety function is accomplished by autoinitiation of the redundant ECCS in the counterpart cubicle.

See Subsection 9.4.5.3 for additional information on the ECCS equipment area cooling system.

NRC ACTION PLAN (NUREG-0660 as clarified by NUREG-0737)

II.K.3.25 Effect of Loss of Alternating-Current Power on Pump Seals

NRC Position

The licensees should determine, on a plant-specific basis, by analysis or experiment, the consequences of a loss of cooling water to the reactor recirculation pump seal coolers. The pump seals should be designed to withstand a complete loss of alternating-current (ac) power for at least 2 hours. Adequacy of the seal design should be demonstrated.

CPS Response

Illinois Power Company has sponsored through the BWR Owners' Group an evaluation investigating the ramifications of the loss of reactor recirculation pump seal cooling for a period of 2 hours. This evaluation was submitted via a letter from D. B. Waters, Chairman of BWR Owners' Group to D. G. Eisenhut, Director of Licensing (NRC), sent in May, 1981 and numbered BWROG-8142. The study indicated that the loss of pump seal cooling for 2 hours is not a safety problem, but may require seal repairs prior to resuming operating. Even in the case of both seal cooling systems failing, followed by extreme degradation of the pump seals, the primary coolant loss is analyzed to be less than 70 gallons per minute. Consequently, no hazard to the health and safety of the public will result from total loss of recirculation pump seal cooling water.

Informal discussions between the NRC and the BWR Owner's Group indicated that the above position was not sufficient. In response, a supplemental memorandum was submitted via the letter from T. J. Dente (BWR Owners' Group) to D. G. Eisenhut (NRC) dated September 21, 1981. This supplement describes three tests performed on pumps that are representative of BWR reactor recirculation pumps in which all seal cooling water was lost. These test results show that pump seal leakage is acceptably low (under 5 gpm) following a loss of seal cooling water for as long as two hours. These test results are representative and bounding for the Bingham Pump Company reactor recirculation pumps utilized at the Clinton Power Station.

In a discussion as documented in the letter from D. B. Waters, Chairman of BWR Owners' Group, to D. G. Eisenhut, Director of Licensing (NRC), it was indicated that the NRC meant that only loss of offsite power and not failure of emergency power should be assumed for this TMI Action Plan task. If it is assumed that emergency power is available, cooling of the reactor recirculation pump seals can be accomplished by an alternate backup cooling pump which was installed to prevent seal damage from a loss of offsite power event and thus improves plant availability. In the event of the loss of offsite power, this pump will be actuated manually. The pump is in parallel with the CRD pumps and feeds through the CRD system, the normal supply for the recirculation pump seals. This arrangement is shown on Drawing M05-1078, Sheet 1. This pump is supplied from an emergency diesel generator (Division 2). The pipe routing from the CRD system to the recirculation pump seals is shown on Drawing M05-1072, Sheets 1 and 2. The pump is designed for a flow rate of 10 gpm at 1790 psig.

NRC ACTION PLAN (NUREG-0660 as clarified by NUREG-0737)

II.K.3.27 Provide Common Reference Level for Vessel Level Instrumentation

NRC Position

Different reference points of the various reactor vessel water level instruments may cause operator confusion. Therefore, all level instruments should be referenced to the same point. Either the bottom of the vessel or the top of the active fuel are reasonable reference points.

CPS Response

Illinois Power Company jointly sponsored through the BWR Owners' Group an evaluation of providing a common reference level for vessel level instrumentation. This evaluation was submitted via the letter from D. B. Waters, Chairman of BWR Owners' Group, to D. G. Eisenhut, Director of Licensing (NRC), dated December 29, 1980. This evaluation concluded that the current BWR water level indication system is fully adequate to allow plant operators to respond properly under all postulated reactor conditions and that there are no required design changes based on any plant safety considerations.

The above evaluation was rejected by the NRC as explained in the letter from D. G. Eisenhut to D. B. Waters, dated April 6, 1981. In this letter, the NRC stated its position "...all level instruments should be referenced to the same point. The selection of the reference point for any specific reactor has been left to the discretion of the licensee..." In view of this situation, Illinois Power has selected the common reference point to be 15 inches above the bottom of the steam dryer skirt at RPV elevation 520.62". This reference point was the reference point used for all RPV level ranges except the fuel zone instruments.

The fuel zone instruments have dual numerical faces with the inner scale readings corresponding to the common instrument zero plane and the outer scale readings corresponding to the classical BWR fuel calibration showing the top of active fuel.

This dual indicating scale for the fuel zone instrumentation is not confusing to the operator because it is secondary to the numerical scale which indicates "common" water level information in numbers. However, it also retains ready reference to actual fuel zone levels. As a result of training and experience, the operator is aware that the fuel zone level is always off-scale high and is adjacent to the wide-range level instruments which are on-scale. Should the actual level pass through the lower end of the wide-range instruments, it would indicate an equivalent level on the fuel zone instrument now that a common reference instrument is employed.

Appropriate training for the use of reactor vessel water level indicators is provided. In addition, training documents, maintenance procedures and emergency operating procedures have been upgraded to address the common vessel reference level for the fuel zone level meter.

NRC ACTION PLAN (NUREG-0660 as clarified by NUREG-0737)

II.K.3.28 Verify Qualification of Accumulators on ADS Valves

NRC Position

Safety analysis reports claim that air or nitrogen accumulators for the ADS valves are provided with sufficient capacity to cycle the valves open five times at design pressures. GE has also stated the ECC systems, are designed to withstand a hostile environment and still perform their function 100 days after an accident. The Licensee should verify that the accumulators on the ADS valves meet these requirements, even considering normal leakage.

CPS Response

The accumulators for the ADS valves are sized to provide two operating cycles at 70% of drywell design pressure. This cyclic capability is validated during preoperational testing at the station. The accumulators are safety grade ASME Section III Components.

The 100-day, postaccident functional operability requirement is met through conservative design and redundancy; seven ADS valves are provided with code-qualified accumulators and seismic Category 1 piping within primary containment. Two redundant 2-day supplies of bottled air are available for long-term usage with remote makeup capability being provided for the remainder of the postulated accident to assure system functional operability. Only two of the ADS valves need function to meet short-term demands and the functional operability of only one ADS valve will fulfill longer term needs. Each accumulator is instrumented to provide the reactor operator with indication of the failure of any of the redundant systems under hostile environmental conditions.

Illinois Power Company jointly sponsored through the BWR Owners' Group an evaluation of the adequacy of the ADS configurations. Preliminary evaluation results are discussed in the following paragraph.

The accumulators are designed to provide two ADS actuations at 70% of drywell design pressure, which is equivalent to 4 to 5 actuations at atmospheric pressure. The ADS valves are designed to operate at 70% of drywell design pressure because that is the maximum pressure for which rapid reactor depressurization through the ADS valves is required. The greater drywell design pressures are associated only with the short duration primary system blowdown in the drywell immediate]y following a large pipe rupture for which ADS operation is not required. For large breaks which result in higher drywell pressure, sufficient reactor depressurization occurs due to the break to preclude the need for ADS. One ADS actuation at 70% of drywell design pressure is sufficient to depressurize the reactor and allow inventory makeup by the low pressure ECC systems. However, for conservatism, the accumulators are sized to allow 2 actuations at 70% of drywell design pressure.

In a September 11, 1984 letter from A. Schwencer (NRC) to D. Herborn (IPC), additional information was requested relative to ADS accumulator leakage. The response to this request provided in a November 19, 1984 letter from F. A. Spangenberg (IPC) to A. Schwencer (NRC), discussed how accumulator leakage is demonstrated to be low through qualification and testing and that expected leakage will not prevent the required ADS function.

See Subsection 9.3.1 for a description of the ADS air supply.

NRC ACTION PLAN (NUREG-0660 as clarified by NUREG-0737)

II.K.3.30 Revised Small-Break Loss-of-Coolant-Accident Methods to Show Compliance with 10 CFR Part 50, Appendix K

NRC Position

The analysis methods used by nuclear steam supply system (NSSS) vendors and/or fuel suppliers for small-break loss-of-coolant accident (LOCA) analysis for compliance with Appendix K to 10 CFR Part 50 should be revised, documented, and submitted for NRC approval. The revisions should account for comparisons with experimental data, including data from the LOFT Test and Semiscale Test facilities.

CPS Response

General Electric Company is the owner of the analytical model, as described in NEDE-20566P (Reference 28), used to evaluate the small break LOCA's for the Clinton Station BWRs. General Electric's response to this requirement was to justify the acceptability of the current model.

The General Electric Company has evaluated the NRC request requiring that the BWR small-break LOCA analysis methods are to be demonstrated to be in compliance with Appendix K to 10 CFR 50 or that they be brought into compliance by analysis methods changes. The specific NRC concerns are contained in NUREG-0626, Appendix F. The specific NRC concerns identified in Subsection 4.2.10 of NUREG-0626 (Appendix F) relate to the following: counter current flow limiting (CCFL) effects, core bypass modeling, pressure variation in the reactor pressure vessel, integral experimental verification, quantification of uncertainties in predictions, the recirculation line inventory modeling, and the homogeneous/equilibrium model.

The General Electric Company response to the NRC small break model concerns was provided at a meeting between the NRC and GE on June 18, 1981. Information provided at this meeting showed that, based on the TLTA small break test results and sensitivity studies, the existing GE small break LOCA model already satisfies the concerns of NUREG-0626 and is in compliance with 10 CFR 50, Appendix K. Therefore, the GE model is acceptable relative to the concerns of Item II.K.3.30, and no model changes need be made to satisfy this item.

Documentation of the information provided at the June 18, 1981 meeting was provided via the letter from R. H. Buckholz (GE) to D. G. Eisenhut (NRC), dated June 26, 1981. Acceptance of the model information was provided in the letter from D. G. Eisenhut to R. H. Buckholz dated December 13, 1983.

In October 2000, the ECCS LOCA analysis was upgraded to the SAFER GESTR methodology which meets the requirements above.

NRC ACTION PLAN (NUREG-0660 as clarified by NUREG-0737)

II.K.3.31 Plant-Specific Calculations to Show Compliance with 10 CFR Part 50.46

NRC Position

Plant-specific calculations using NRC-approved models for small-break loss-of-coolant accidents (LOCAs) as described in Item II.K.3.30 to show compliance with 10 CFR 50.46 should be submitted for NRC approval by all licensees.

CPS Response

Illinois Power Company has provided the results of the Clinton specific LOCA analysis. The small-break LOCA calculations included in the LOCA analysis are discussed in Subsection 6.3.3.7. The references listed in Subsection 6.3.6 describe the currently approved Appendix K methodology used. Compliance with 10 CFR 50.46 has previously been established for that methodology. General Electric Company has addressed the specific NRC concerns on the small-break LOCA analysis as outlined in response to NRC Action Plan Item II.K.3.30.

NRC ACTION PLAN (NUREG-0660 as clarified by NUREG-0737)

II.K.3.44 Evaluation of Anticipated Transients with Single Failure to Verify No Fuel Failure

NRC Position

For anticipated transients combined with the worst single failure and assuming proper operator actions, licensees should demonstrate that the core remains covered or provide analysis to show that no significant fuel damage results from core uncovery. Transients which result in a stuck-open relief valve should be included in this category.

CPS Response

For the initial response to this requirement, Illinois Power Company, jointly sponsored through the BWR Owners' Group, conducted an evaluation of the worst anticipated transient with the worst single failure. These results were submitted to the NRC via a letter from D. B. Waters, Chairman BWR Owners' Group, to D. G. Eisenhut, Director NRC, dated December 29, 1980. Generic Letter 81-32 transmitted the NRC evaluation of this item. The report was found to be acceptable for referencing by individual licensee/applicants. A summary of the results of the analysis follows.

The anticipated transients in NRC Regulatory Guide 1.70, Revision 3 were reviewed for all BWR product line BWR/2 through BWR/6 from a core cooling viewpoint. The loss of feedwater event was identified to be the most limiting transient which would challenge core cooling. The BWR/6 is designed so that the HPCS (or ADS with subsequent low pressure makeup) is independently capable of maintaining the water level above the top of the active fuel given a loss of feedwater. The detailed BWROG analysis showed that even with the worst single failure in combination with the worst transient the core remains covered.

Furthermore, even with degraded conditions involving one stuck open relief valve (SORV) in addition to the worst transient with the worst single failure, the studies showed that the core remains covered during the whole course of the transient either due to RCIC operation or due to automatic depressurization via the ADS or manual depressurization by the operator so that low pressure inventory makeup can be used.

It was thus concluded that for anticipated transients combined with the worst single failure, the core remains covered. Additionally, it was concluded that for severely degraded transients beyond the design basis where an SORV and an additional failure occurs, the core remains covered with proper operator action.

The generic analysis for the BWR/6 product line was performed using the Kuo Sheng Station design. Since the key analysis parameters of core thermal power, reactor coolant inventory and RCIC system flow at Clinton Power Station are identical to the Kuo Sheng Station parameters, it was concluded that the BWR/6 generic analysis is representative for the Clinton Power Station.

In June 2000, a plant-specific Clinton Power Station analysis was performed for the loss of feedwater transient involving degraded conditions wherein one SORV is assumed concurrent with the RCIC and HPCS unavailable. For the analysis, ADS is assumed to initiate by design on a reactor water level Low Low Low, Level 1 initiation signal. However, this analysis takes

into account the effect of the ADS timers timing out prior to ADS actuation, since this design feature was not implemented at the time of the generic analysis.

The results of this June 2000 analysis showed that reactor water level in the downcomer region initially drops due to void collapse following the scram and then continues to drop due to the mass loss through the SORV and boil-off from decay heat. The reactor pressure also drops rapidly following the scram and continues to drop due to the SORV. Without any high pressure inventory makeup available, the water level continues to drop causing a reactor water level Low Low Low, Level 1 initiation signal to occur at about 660 seconds. After the high drywell pressure bypass timer and ADS timer time out at about 1205 seconds, ADS actuation occurs which causes rapid system depressurization and a temporary spike in reactor water level due to void formation. Shortly thereafter, at about 1300 seconds, the low pressure ECCS begin to inject and the core is quickly reflooded.

During this event, the core becomes briefly uncovered. However, fuel heatup due to the uncovery is minor such that no fuel damage occurs.

NRC ACTION PLAN (NUREG-0660 as clarified by NUREG-0737)

II.K.3.45 Evaluation of Depressurization with Other Than ADS

NRC Position

Analyses to support depressurization modes other than full actuation of the ADS (e.g., early blowdown with one or two SRVs) should be provided. Slower depressurization would reduce the possibility of exceeding vessel integrity limits by rapid cooldown.

CPS Response

In response to this requirement, Illinois Power Company jointly sponsored through the BWR Owners' Group a program to evaluate depressurization modes other than full actuation of the ADS. The results of this program were submitted to the NRC in a letter from D. B. Waters, Chairman of BWR Owners' Group, to D. G. Eisenhut, Director (NRC), dated December 29, 1980. A summary of this evaluation follows.

The cases analyzed in the reference report show that, based on core cooling considerations, no significant improvement can be achieved by a slower depressurization rate. A significantly slower depressurization will result in increased core uncovered time. Furthermore, a moderate depressurization rate necessitates an earlier action to initiate HPCS without significant benefit to vessel fatigue usage. This earlier actuation time necessitates a higher initiation point which would result in an increased frequency of ADS actuation.

It should be noted that the ADS is not a normal Core Cooling system, but is a backup for the high pressure core cooling systems such as feedwater, RCIC or HPCS. If ADS operation is required, it is because normal emergency core cooling is threatened. As a full ADS blowdown is well within the design basis of the RPV and the system is properly designed to minimize the threat to core cooling, no change in depressurization rate is required.

NRC ACTION PLAN (NUREG-0660 and listed in NUREG-0737)

II.K.3.46 Michelson Concerns on the Importance of Natural Circulation During a Very Small Break LOCA and Other Related Items

NRC Position*

A number of concerns related to decay heat removal following a very small break LOCA and other related items were questioned by Mr. C. Michelson of the Tennessee Valley Authority. These concerns were identified for PWRs. GE was requested to evaluate these concerns as they apply to BWRs and to assess the importance of natural circulation during a small-break LOCA in BWRs. GE has not yet responded to the Michelson concerns. A brief description of natural circulation was addressed in NEDO-24708. The submittal was incomplete, however, in that natural circulation for purpose of depressurizing the reactor vessel was not addressed. GE should provide a response to the Michelson concerns as they relate to BWR plants.

CPS Response

General Electric Company has provided responses to the questions posed by Mr. C. Michelson as they relate to BWR plants. These responses were prepared on behalf of the BWR Owners' Group and issued in a letter to Mr. D. F. Ross of the NRC from R. H. Buchholz of GE dated February 21, 1980, and titled "Response to Questions Posed by Mr. C. Michelson." An additional question was issued in June 1980 and the BWR Owners' Group responded in a letter to D. G. Eisenhut of the NRC from D. B. Waters, Chairman BWR Owners' Group, dated January 31, 1981, and titled "BWR Emergency Procedure Guidelines Revision 1, and Responses to Related Questions." The Staff has completed its review of this Action Plan item and has found the responses to be acceptable.

* This "Position" is taken from NUREG-0626 since it is not provided in detail in either NUREG-0660 or NUREG-0737.

NRC ACTION PLAN (NUREG-0694 and listed in NUREG-0737)

III.A.1.1 Upgrade Emergency Preparedness

NRC Position

Comply with Appendix E, "Emergency Facilities," to 10 CFR Part 50, Regulatory Guide 1.101, "Emergency Planning for Nuclear Power Plants," and for the offsite plans, meet essential elements of NUREG-75/111 (Ref. 3) or have a favorable finding from FEMA.

CPS Response

The Clinton Power Station (CPS) Emergency Plan is maintained as a separate document and complies with NRC requirements described in Title 10, Code of Federal Regulations, Part 50.47, and Appendix E as amended. The CPS Emergency Plan was developed using guidance found in NUREG-0654 (Revision 1). Emergency Planning is now referenced in Section 13.3. Appendix 13.B of the FSAR has been deleted.

NRC ACTION PLAN (NUREG-0694 and listed in NUREG-0737)

III.A.1.2 Upgrade Emergency Support Facilities

NRC Position

Establish an interim onsite technical support center separate from, but close to, the control room for engineering and management support of reactor operations during an accident. The center shall be large enough for the necessary utility personnel and five NRC personnel, have direct display or callup of plant parameters, and dedicated communications with the control room, the emergency operations center, and the NRC. Provide a description of the permanent technical support center.

Establish an onsite operational support center, separate from but with communications to the control room for use by operations support personnel during an accident.

Designate a near-site emergency operations facility with communications with the plant to provide evaluation of radiation releases and coordination of all onsite and offsite activities during an accident.

These requirements shall be met before fuel loading. See NUREG-0578, Subsection 2.2.2.b, 2.2.2.c (Ref. 4), and letters of September 27 (Ref. 15) and November 9, 1979 (Ref. 18) and April 25, 1980 (Ref. 25)

CPS Response

The Emergency Response Facilities for Clinton Power Station (CPS) were designed in accordance with the guidance contained in NUREG-0696, "Functional Criteria for Emergency Response Facilities." The Emergency Operations Facility (EOF) is now located outside of the CPS security fence approximately 1500 feet east of the Main Control Room and the Technical Support Center (TSC). Details of the EOF, TSC, Operations Support Center, and Backup EOF are contained in the "Emergency Response Facilities Design Report" submitted to the NRC in letter U-0643, dated June 16, 1985.

The EOF has been located offsite per AmerGen request in the letter U-603471 dated April 5, 2001 and NRC approval in a letter dated March 22, 2002.

The TSC radiation monitor that is capable of distinguishing radioiodines is not a separate monitor because the TSC at Clinton is located within the Main Control Room envelope.

NRC ACTION PLAN (NUREG-0660 as clarified by NUREG-0737)

III.A.2 Improving Licensee Emergency Preparedness -- Long-Term

NRC Position

Each nuclear facility shall upgrade its emergency plans to provide reasonable assurance that adequate protective measures can and will be taken in the event of a radiological emergency. Specific criteria to meet this requirement is delineated in NUREG-0654 (FEMA-REP-1), "Criteria for Preparation and Evaluation of Radiological Emergency Response Plans and Preparation in Support of Nuclear Power Plants."

CPS Response

The Clinton Power Station (CPS) Emergency Plan is maintained as a separate document and complies with NRC requirements described in 10CFR50.47 and Appendix E as amended. The CPS Emergency Plan was developed using guidance found in NUREG-0654 (Revision 1). Emergency Planning is now referenced in Section 13.3. Appendix 13.B of the FSAR has been deleted.

NRC ACTION PLAN (NUREG-0660 as clarified by NUREG-0737)

III.D.1.1 Integrity of Systems Outside Containment Likely to Contain Radioactive Material

NRC Position

Applicants shall implement a program to reduce leakage from systems outside containment that would or could contain highly radioactive fluids during a serious transient or accident to as-low-as-practical levels. This program shall include the following:

1. Immediate leak reduction

   a. Implement all practical leak reduction measures for all systems that could carry radioactive fluid outside of containment.

   b. Measure actual leakage rates with system in operation and report them to the NRC.

2. Continuing Leak Reduction -- establish and implement a program of preventive maintenance to reduce leakage to as-low-as-practical levels. This program shall include periodic integrated leak tests at intervals not to exceed each refueling cycle.

CPS Response

The Leakage Reduction Program is delineated in Technical Specifications Section 5.5.2. Specific implementing procedures have been developed. The following is a summary of the leak reduction program for systems outside of containment that could contain highly radioactive fluids during an accident.

Sump timers are monitored shiftly. When abnormal leak rates are detected, the source of the leak will be determined and corrected. Additionally, the system is walked down to visually inspect for signs of leakage.

In cases where potential leakage will not be collected in a sump, such as leakage of gas or steam, or where components are not serviced by a sump, the following alternative methods will be used.

Water Leakage

Water leakage is detected by direct observation where practical. When ALARA or other considerations dictate, leakage will be collected. Observable leakage past vent and drain valves will be eliminated. Valve packing leakage will be maintained.

Steam Leakage

Steam leakage from the RCIC system will be first identified by high temperature readings on area temperature measuring devices. Additionally, area coolers will condense the steam so that it collects in the sump and is measured by the Digital Data Acquisition system.

Gas Leakage

Areas outside of the containment, which contain system piping that could potentially experience radioactive leakage, are maintained at a negative pressure relative to adjacent areas in order to prevent the release of radioactivity above acceptable site dose limits.

Each identified system will be checked for leakage as part of the Surveillance Test or other approved Procedure. Initial leak test results were supplied May 22, 1987 in IP letter U-600940. Leak testing will be performed during or before each refueling outage.

The following systems are included to the extent indicated in the program.

a. Reactor Core Isolation Cooling System

   Entire system outside containment containing steam or water except drain line to main condenser.

b. Residual Heat Removal System

   Entire System outside containment containing steam or water except line to Liquid Radwaste System.

c. High Pressure Core Spray System

   Entire system outside containment.

d. Low Pressure Core Spray System

   Entire system outside containment.

e. Combustible Gas Control System

   Hydrogen/Oxygen Analyzers and associated piping.

   Thermal Hydrogen Recombiners and associated piping.

f. Containment Monitoring System

   Suppression Pool Level detection portion of the system.

g. Suppression Pool Makeup System

   Suppression Pool Level detection portion of the system.

h. Post-Accident Sampling System

   Entire system outside containment (until such time as a modification eliminates the PASS penetration as a potential leakage path.)

Systems containing radioactive materials which are excluded from the program follow with the justification for exclusion.

a. MSIV Leakage Control System

This system draws leakage from the main steam lines between the MSIVs and the outboard shut-off valve and exhausts into the Standby Gas Treatment System (SGTS). The MSIV Leakage Control System operates at a negative pressure; hence leakage would be into the system and of no concern.

b. Standby Gas Treatment System

The SGTS collects and processes post-LOCA containment leakage. Leakage out of the SGTS into regions (secondary containment) served by the system is not applicable during post-LOCA operation because the SGTS carrying the radioactive air is on the suction side of the exhaust fan.

c. Reactor Water Cleanup (RWCU) System

The system is not required to function during or immediately following an accident and is isolated from post-accident fluids. Possible system usage would be under controlled conditions such that the system could be prepared for such usage in the long-term post-accident situation.

d. Suppression Pool Cleanup System

See justification for c.

e. Off-Gas System

See justification for c.

f. Liquid and Solid Radwaste System

See justification for c.

Gaseous systems to be tested include the hydrogen analyzers and associated piping in the Combustible Gas Control Systems. Each item will be tested by checking each mechanical joint with liquid soap.

NRC ACTION PLAN (NUREG-0660 as clarified by NUREG-0737)

III.D.3.3 Improved Inplant Iodine Instrumentation Under Accident Conditions

NRC Position

(1) Each licensee shall provide equipment and associated training and procedures for accurately determining the airborne iodine concentration in areas within the facility where p]ant personnel may be present during an accident.

(2) Each applicant for a fuel-loading license to be issued prior to January 1, 1981 shall provide the equipment, training, and procedures necessary to accurately determine the presence of airborne radioiodine in areas within the plant where plant personnel may be present during an accident.

CPS Response

Inplant airborne radioiodine concentrations during an accident will be measured using the Clinton Power Station Process Radiation Monitoring System (PRMS) and grab sample/laboratory analysis methods.

Fixed Constant Air Monitors (CAMs) with single channel analyzer (SCA) capabilities (adjacent channel subtraction for noble gas contributions) for measurement of radioiodine are located in vital/nonvital areas within the plant. Some of the CAMs provide local and remote indication of radioiodine concentrations to the Main Control Room (MCR)and Technical Support Center (TSC).

Portable CAMs, with the same capabilities as the fixed CAMs, may be located in critical areas to provide the necessary radioiodine monitoring. The portable CAMs are capable of sampling HVAC streams at predetermined sample tap locations or the atmosphere in a general area. The portable CAMs provide local indication of radioiodine concentrations and can be tied into the PRMS via locally installed communication jacks so as to provide this data to the MCR and TSC.

Sample cartridges from the fixed and portable CAMs may be retrieved for a detailed laboratory analysis.

Grab samplers with charcoal cartridge adapters are available to supplement the PRMS fixed and portable CAMs.

Standard charcoal cartridges containing TEDA impregnated carbon and silver zeolite (AgZ) type cartridges will be available for use in the various sampling systems. If entrapped noble gases interfere with the radioiodine analysis, clean air/nitrogen flushing will be performed in a laboratory fume hood.

Low background counting facility for post-accident analysis is available at plant elevation 737 feet in the Control Building. HPGe Multi-Channel Analyzer System are available in the facility. Software programs are incorporated in the system for rapid, accurate measurement of radioiodine.

The use of sampling equipment and analysis systems for the determinations of radioiodine during an accident situation has been incorporated into the Clinton Power Station Radiation Protection and Chemistry Department training/qualification program.

Emergency procedures have been developed to ensure that accurate determinations of radioiodine concentrations are provided during the course of an accident. These procedures were made available for review by Region III Division of Inspection and Enforcement.

NRC ACTION PLAN (NUREG-0660 as clarified by NUREG-0737)

III.D.3.4 Control-Room Habitability Requirements

NRC Position

In accordance with Task Action Plan Item III.D.3.4 and control room habitability, licensees shall assure that control room operators will be adequately protected against the effects of accidental release of toxic and radioactive gases and that the nuclear power plant can be safely operated or shut down under design basis accident conditions (Criterion 19, "Control Room," of Appendix A, "General Design Criteria for Nuclear Power Plants," to 10 CFR Part 50).

CPS Response

This requirement has been met for CPS as detailed within this FSAR. Section 6.4 fully describes the control room HVAC system layout and functional design, including protection of the control room from toxic and radioactive gases. Subsection 2.2.3 reports the results of the evaluation of potential accidents involving nonradioactive hazardous materials including gaseous fuels, liquified gases, explosives and toxic chemicals. Subsection 7.3.1.1.6 describes the control room HVAC controls and instrumentation.

REFERENCES

1. U.S. Nuclear Regulatory Commission, "NRC Action Plan Developed as a Result of the TMI-2 Accident," USNRC Report NUREG-0660, Vols. 1 and 2, May 1980.

2. U.S. Nuclear Regulatory Commission, "Clarification of TMI Action Plan Requirements," USNRC Report NUREG-0737, November 1980.

3. U.S. Nuclear Regulatory Commission, "Guide and Checklist for Development and Evaluation of State and Local Government Radiological Emergency Response Plans in Support of Fixed Nuclear Facilities (Reprint of WASH-1238)," USNRC Report NUREG-75/111, October 1975.

4. U.S. Nuclear Regulatory Commission, "TMI-2 Lessons Learned Task Force Status Report and Short-Term Recommendations," USNRC Report NUREG-0578, July 1979.

5. U.S. Nuclear Regulatory Commission, "Generic Assessment of Delayed Reactor Coolant Pump Trip During Small Break Loss-of-Coolant Accidents in Pressurized Water Reactors," USNRC Report NUREG-0623, November 1979.

6. U.S. Nuclear Regulatory Commission (FEMA-REP-1), "Criteria for Preparation and Evaluation of Radiological Emergency Response Plans and Preparedness in Support of Nuclear Power Plants," USNRC Report NUREG-0654, January 1980.

7. U.S. Nuclear Regulatory Commission, "TMI-Related Requirements for New Operating Licenses," USNRC Report NUREG-0694, June 1980.

8. U.S. Nuclear Regulatory Commission, "Functional Criteria for Emergency Response Facilities," Final Report, USNRC Report NUREG-0696, February 1981.

9. Reports of the Bulletins and Orders Task Force of the NRC Office of Nuclear Reactor Regulation:

   a. U.S. Nuclear Regulatory Commission, "Generic Evaluation of Feedwater Transients and Small-Break Loss-of-Coolant Accidents in Westinghouse Designed Operating Plants," USNRC Report NUREG-0611, January 1980.

   b. U.S. Nuclear Regulatory Commission, "Staff Report of the Generic Assessment of Feedwater Transients and Small-Break Loss-of-Coolant Accidents in Boiling Water Reactors Designed by the General Electric Company," USNRC Report NUREG-0626, January 1980.

10. U.S. Nuclear Regulatory Commission, Office of Inspection and Enforcement Region III, "Nuclear Incident at Three Mile Island-Supplement," IE Bulletin No. 79-05B, April 1979.

11. U.S. Nuclear Regulatory Commission, Office of Inspection and Enforcement Region III, "Review of Operational Errors and System Misalignments Identified During the Three Mile Island Incident," IE Bulletin No. 79-06A, April 1979.

12. U.S. Nuclear Regulatory Commission, Office of Inspection and Enforcement Region III, "Events Relevant to Boiling Water Power Reactors Identified During the Three Mile Island Incident," IE Bulletin No. 79-08, April 14, 1979.

13. Letter from D. F. Ross, NRC, to All B&W Operating Plants (except TMI-1 and -2), Subject: Identification and Resolution of Long-Term Generic Issues Related to the Commission Orders of May 1979, dated August 21, 1979.

14. Letter from D. G. Eisenhut, NRC, to All Operating Nuclear Power Plants, Subject: Followup Actions Resulting from the NRC Staff Reviews Regarding the Three Mile Island Unit 2 Accident, dated September 13, 1979.

15. Letter from D. B. Vassallo, NRC, to All Pending Operating License Applicants, Subject: Followup Actions Resulting from the NRC Staff Reviews Regarding the Three Mile Island Unit 2 Accident, dated September 27, 1979.

16. Letter from D. G. Eisenhut, NRC, to All Power Reactor Licensees, Subject: Emergency Planning, dated October 10, 1979.

17. Letter from H. R. Denton, NRC, to All Operating Nuclear Power Plants, Subject: Discussion of Lessons Learned Short-Term Requirements, dated October 30, 1979.

18. Letter from D. B. Vassallo, NRC, to All Pending Operating License Applications, Subject: Discussion of Lessons Learned Short-Term Requirements, dated November 9, 1979.

19. Letter from D. B. Vassallo, NRC, to All Pending Construction Plant Applicants, Subject: Discussion of Lessons Learned Short-Term Requirements, dated November 9, 1979.

20. Letter from H. R. Denton, NRC, to All Power Reactor Applicants and Licensees, Subject: Qualifications of Reactor Operators, dated March 28, 1980.

21. Letter from D. G. Eisenhut, NRC, to S. T. Rogers, BWR Owners' Group, Subject: Emergency Procedure Guidelines, dated October 21, 1980.

22. D. L. Strenge, M. M. Hendrickson, and E. C. Watson, "RACER- A Computer Program for Calculating Potential External Dose from Airborne Fission Products Following Postulated Reactor Accidents," BNWL-B-69, Battelle Memorial Institute, Pacific Northwest Laboratories, Richland, Washington, 1971.

23. D. J. Pichurski, "RUNT-II: A Computer Program for Determining Time Integrated Doses," Sargent & Lundy Program No. 09.8.034-2.2, December 1979.

24. U.S. Nuclear Regulatory Commission, "Safety Evaluation Report Related to the Operation of LaSalle County Station Units 1 and 2," USNRC Report NUREG-0519, March 1981.

25. Letter from D. G. Eisenhut, NRC, to All Power Reactor Licensees, Subject: Clarification of NRC Site Requirements for Emergency Response Facilities at Each Site, dated April 25, 1980.

26. Letter D. G. Eisenhut, NRC, to All Boiling Water Reactor Licensees of Operating Reactors (Except LaCrosse), Applicants for an Operating License and Holders of Construction Permits; (Generic Letter 83-05), "Safety Evaluation of 'Emergency Procedure Guidelines, Revision 2,' NEDO-24934, June 1982," dated February 4, 1983.

27. Illinois Power letter 0970-L, from D. P. Hall to A. Schwencer (NRC Chief, Licensing Branch No. 2); "Supplement 1 to NUREG-0737 Requirements for Emergency Response Capability," dated April 13, 1983.

28. NEDE-20566P, "General Electric Company Analytical Model for Loss-of-Coolant Analysis in accordance with 10CFR50, Appendix K", November 1975.

29. Letter from R. H. Buchholz, General Electric Company, to D. G. Eisenhut, Director of NRC, dated October 1, 1980.

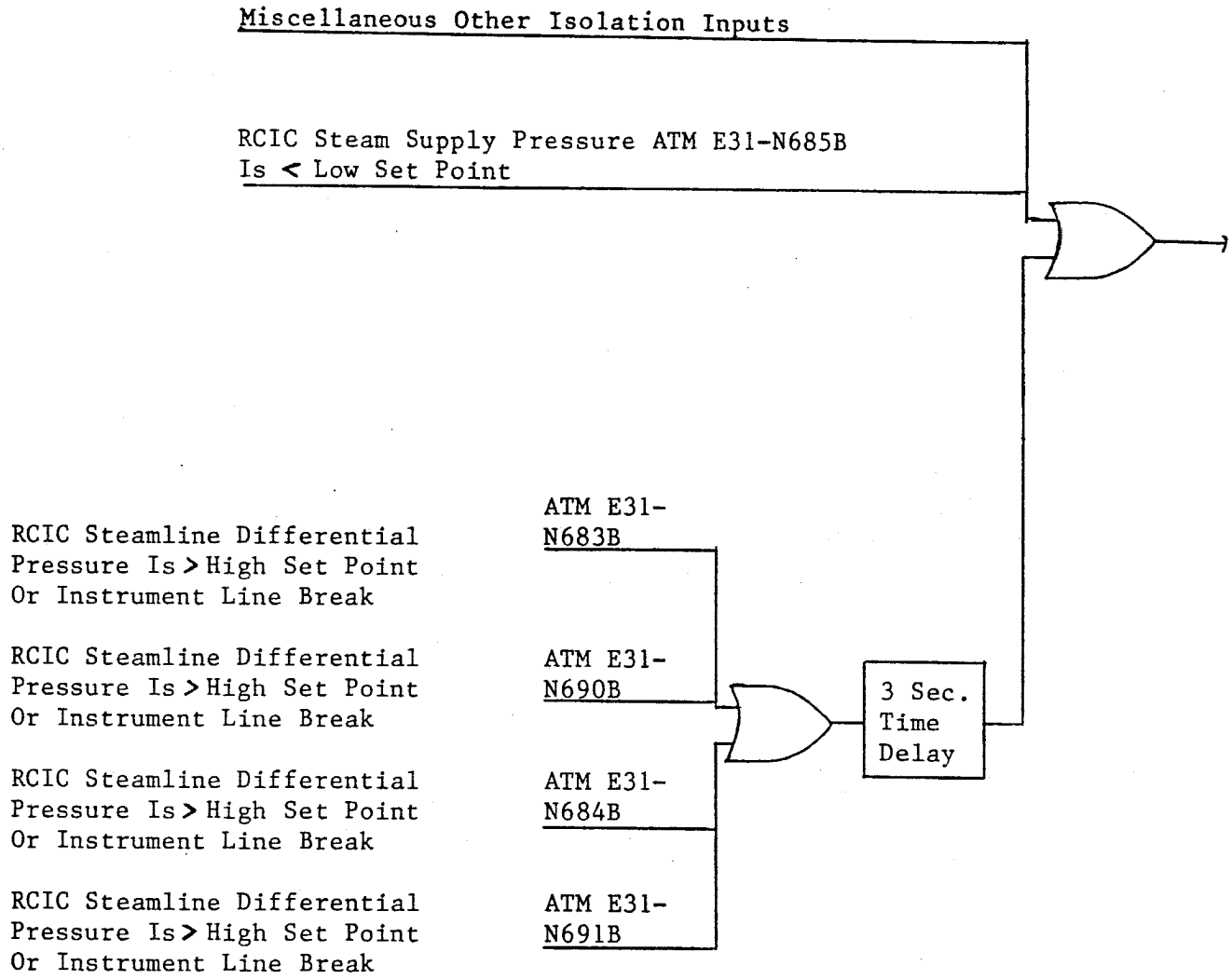

FIGURE D-1 RCIC Steamline Break Detection Logic Diagram

FIGURE D-2. SCHEMATIC DIAGRAM OF TIME DELAY ACTION TO PRECLUDE SPURIOUS RCIC ISOLATION DURING SYSTEM START SEQUENCE

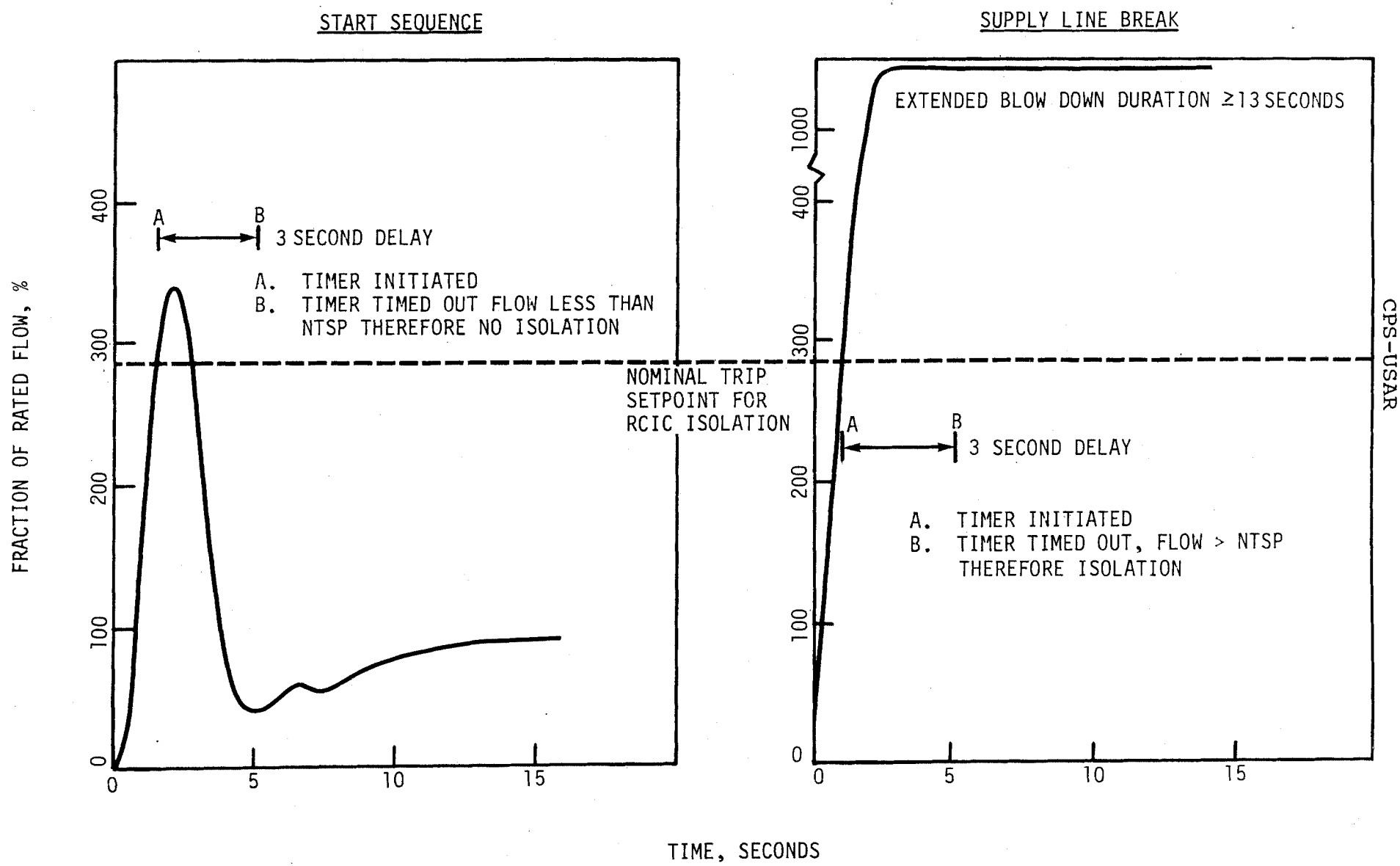

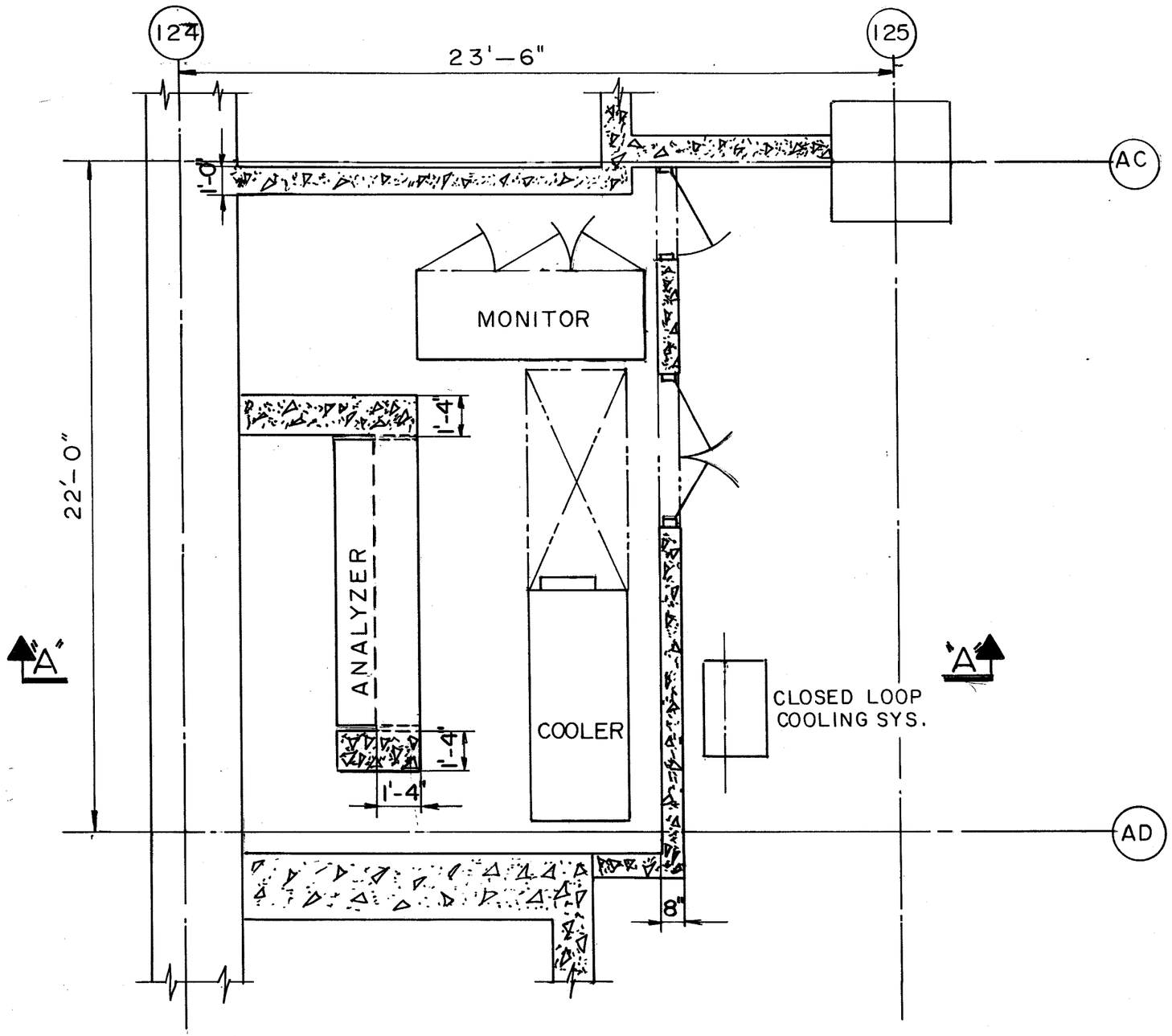

PLAN AT EL. 737'-0"

PAS SYSTEM

SCALE: 1/4" = 1'-0"

CLINTON POWER STATION
UPDATED SAFETY ANALYSIS REPORT

FIGURE D-3

POSTACCIDENT SAMPLING
STATION SHIELDING

(SHEET 1 of 2)

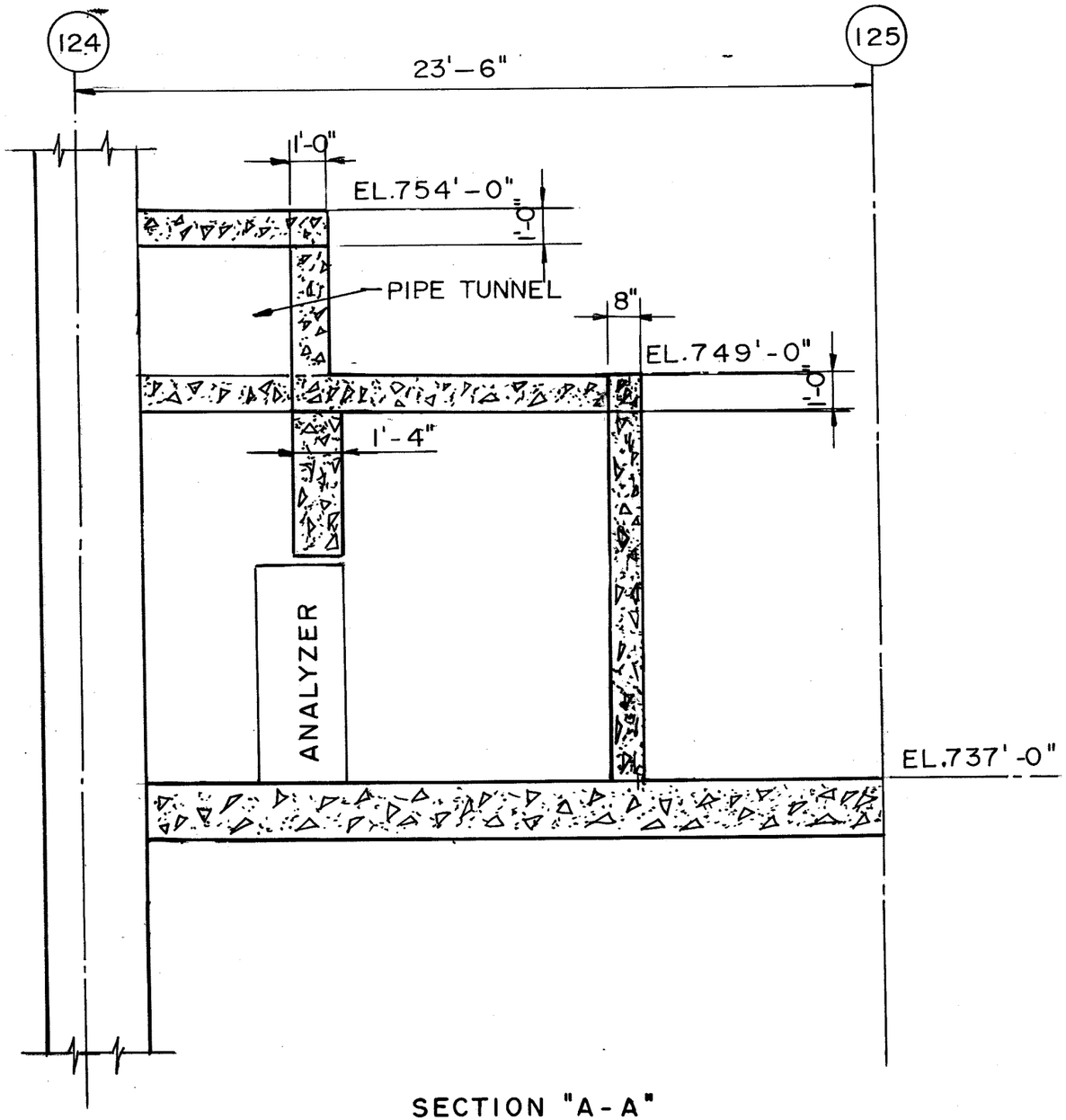

SECTION "A-A"

PAS SYSTEM

SCALE: 1/4" = 1'-0"

CLINTON POWER STATION
UPDATED SAFETY ANALYSIS REPORT

FIGURE D-3

POSTACCIDENT SAMPLING
STATION SHIELDING

(SHEET 2 of 2)

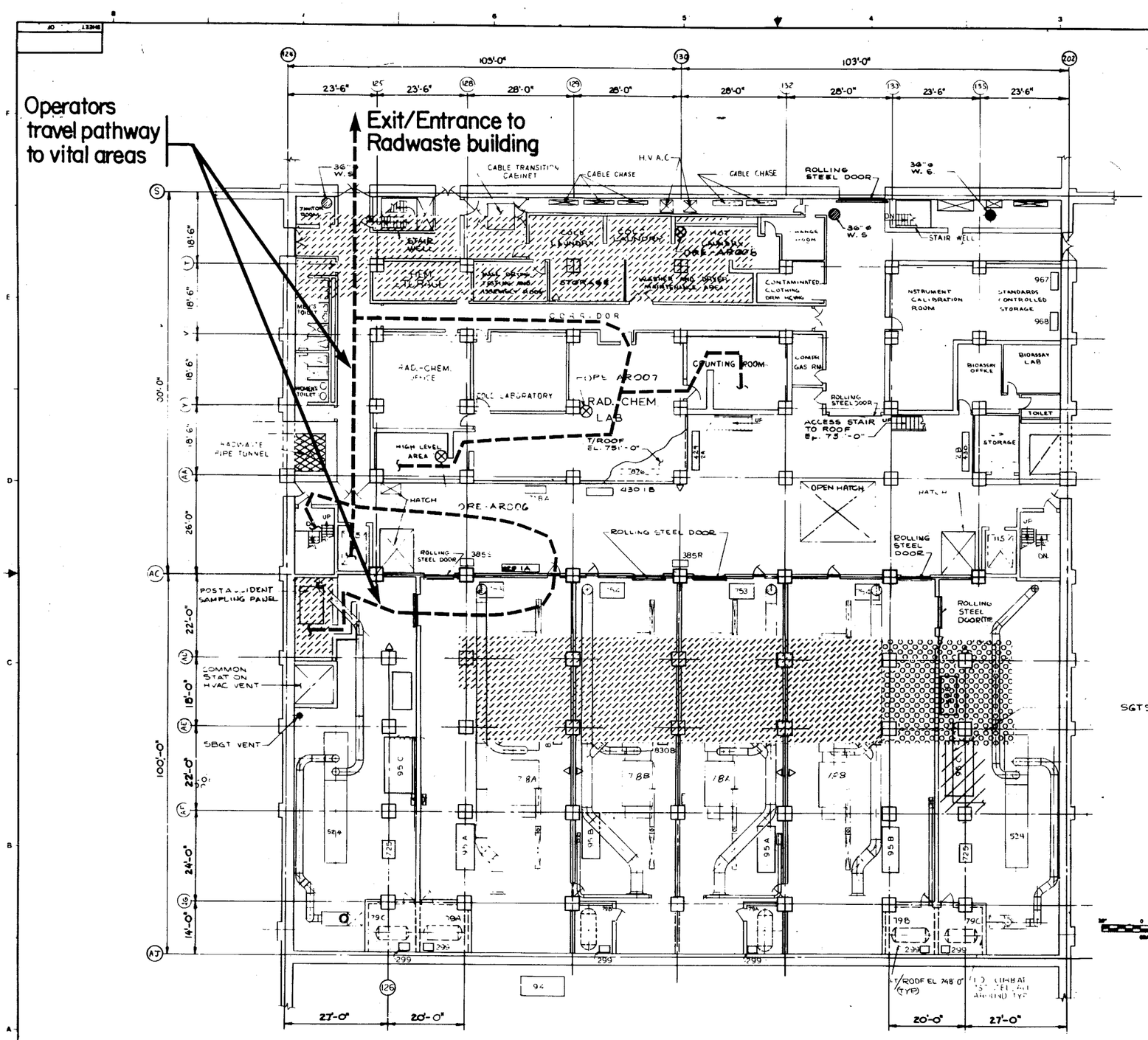

RADIATION ZONE MAP ONE HOUR AFTER ACCIDENT

ITEM	EQUIPMENT NAME
78	DIESEL GENERATORS 1A/B 2A 2B
79	DIESEL GEN. DAY TANK
94	CO_2 STORAGE TANK
95	D.G. AIR START SKID
115	CONTROL BLDG. ELEVATOR
295	OIL ROOM EX. FAN
385	AREA COOLER
524	DIESEL GENERATOR

ITEM	ELECTRICAL
429	DIESEL GEN. MCC 1A, 2A
430	DIESEL GEN. MCC 1B, 2B

ITEM	INSTRUMENT AND CONTROL PANELS EQUIPMENT NAME
725	HPCS VERT BD
753	DIESEL GENERATOR 1A & 2A CONTR PANEL
754	DIESEL GENERATOR 1B & 2B CONTROL PANEL
876	LAB HVAC SUP PANEL
7[illegible]	[illegible] RECOMB. TEST PANEL
967	REPORT GEN. CAM. #1
968	REPORT GEN. CAM. #2
8[illegible]	DEMIN SAMPLE PANEL
528	CONTROL PANEL

NOTE: FOR LAB AREA DETAILS SEE DRWG.# ACD-14

Radiation Zone Designation

Zone	Symbol	Dose Rate Range (REM/Hr.)
1		> 500
2		100 to 500
3		10 to 100
4		1 to 10
5		0.1 to 1
6		0.015 to 0.1
7		< 0.015

Area Radiation Monitor Symbols

⊗ Fixed area

⊞ Portable arm receptacle

FOR THE ZONE DESCRIPTIONS SEE SHEET 1 OF THIS FIGURE.

NOTE
RADIATION ZONES SHOWN ARE DUE ONLY TO THE POSTACCIDENT RELEASE OF SOURCES. RADIATION LEVELS IN CUBICLES DUE TO NORMAL OPERATION SOURCES ARE NOT SHOWN.

CLINTON POWER STATION
UPDATED SAFETY ANALYSIS REPORT

FIGURE D-4

POSTACCIDENT RADIATION ZONE MAPS TO VITAL AREAS

(SHEET 1 of 3)

REVISION 10
OCTOBER 2001

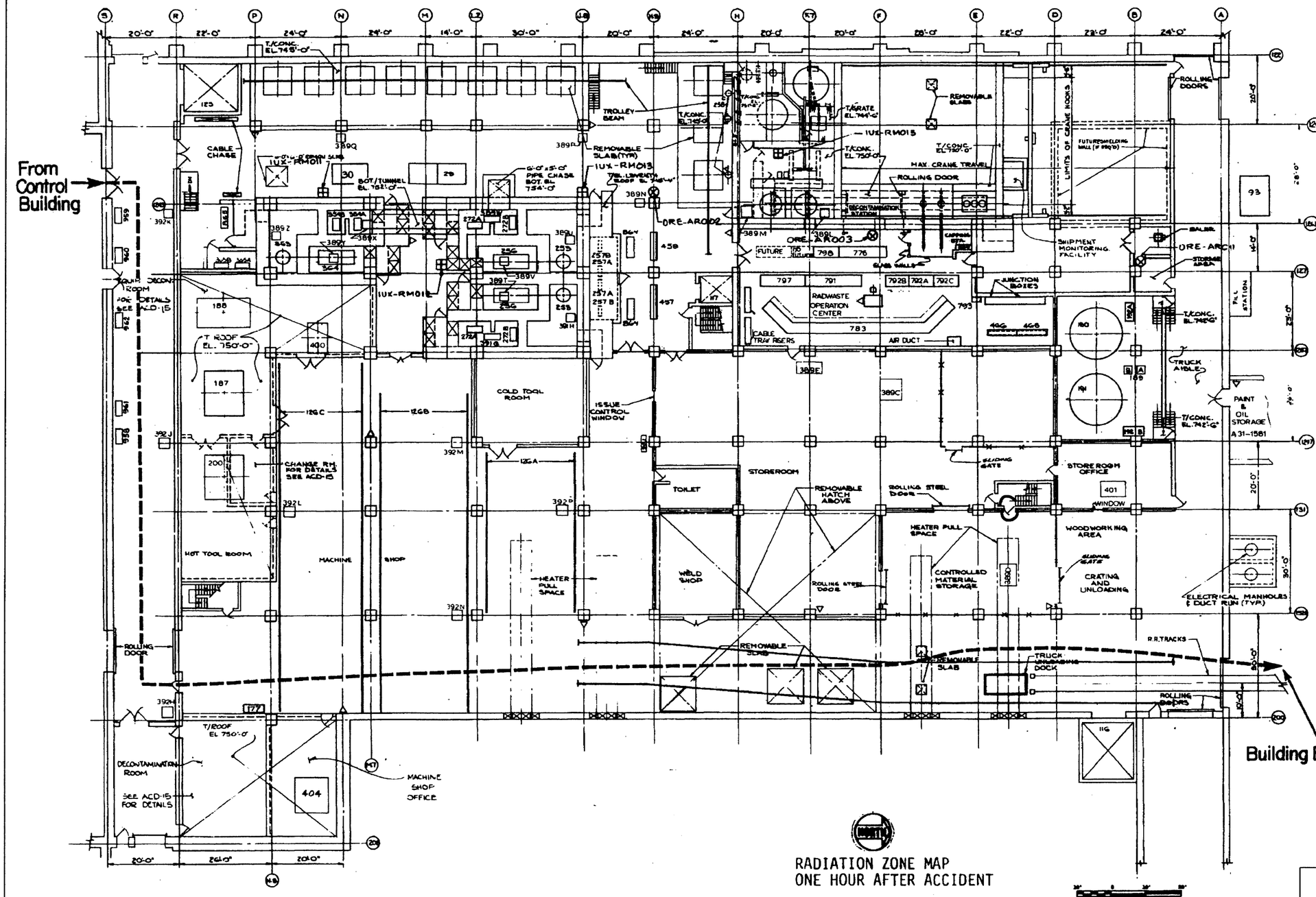

ITEM	EQUIPMENT NAME
93	CO2 STORAGE TANK
116	TURBINE BLDG. ELEVATOR
117	RADWASTE BLDG. ELEVATOR #2
125	RADWASTE BLDG. ELEVATOR #1
126	MACHINE SHOP CRANE (15 TON)
187	MACHINE ROOM EXH FILTER PKG
188	MACHINE SHOP EXH FILTER PKG
189	TURB. OIL CONC. TRANSFER PUMP
190	DIRTY OIL TANK
191	CLEAN OIL TANK
192	TURBINE OIL PURIFIER
200	MACH SHOP EXH FILTER PKG
255	FL. DR. EVAPOR
256	FL. DR. RECIRC. PUMP
257	FL. DR. DISTILLATE PUMP
258	RESIN HOPPER
272	FLOOR DRAIN BOTTOM PUMPS
354	CHEM. WASTE BOTTOM PUMPS
363	CHEM. WASTE HEATER
364	CHEM WASTE RECIRC PUMP
365	CHEM WASTE DISTILLATE PUMP
404	REPAIR SHOP AIR HANDLING UNIT
389	AREA COOLERS
391	
392	AREA COOLERS
400	AIR HANDLING UNIT
401	STORE ROOM AIR UNIT
177	STRM. STM. BOILER

ITEM	ELECTRICAL EQUIP
29	480 V UNIT SUBSTATION C
30	480 V UNIT SUBSTATION D
457	RADWASTE BLDG. MCC E
458	RADWASTE BLDG. MCC F
465	RADWASTE BLDG. MCC M
466	RADWASTE BLDG. MCC N

ITEM	INSTRUMENT AND CONTROL PANELS
776	SOLID RW CONTROL PANEL
783	LIQUID RADWASTE CONTROL PANEL
791	DEMINERALIZER CONTROL PANEL
792	R.W. EVAPORATORS CNTR PNL
797	RW FILTERS CNTR PANEL
798	LIQ. RW. POWER SUPPLY PANEL
864	FLOOR DRN. EVAP. WASTE PANEL
865	CHEM. WAST. EVAP. WASTE. PNL.
869	SOLID R.W. EVAP. AUX. CONTROL PNL
901	WASTE IEACESS ATR. PNF L.P.
793	SUMP PUMP TIMER PNL
958	TURB. BLDG. CAM #4
959	RW. BLDG. CAM #1
980	RW. BLDG. CAM #2
981	RW. BLDG. CAM #3
982	RW. BLDG. CAM #4
845	RW SOLENOID PANELS

RADIATION ZONE MAP
ONE HOUR AFTER ACCIDENT

FOR THE ZONE DESCRIPTIONS SEE SHEET 1 OF THIS FIGURE.

NOTE
RADIATION ZONES SHOWN ARE DUE ONLY TO THE POSTACCIDENT RELEASE OF SOURCES. RADIATION LEVELS IN CUBICLES DUE TO NORMAL OPERATION SOURCES ARE NOT SHOWN.

CLINTON POWER STATION
UPDATED SAFETY ANALYSIS REPORT

FIGURE D-4
POSTACCIDENT RADIATION ZONE MAPS TO VITAL AREAS
(SHEET 2 OF 3)

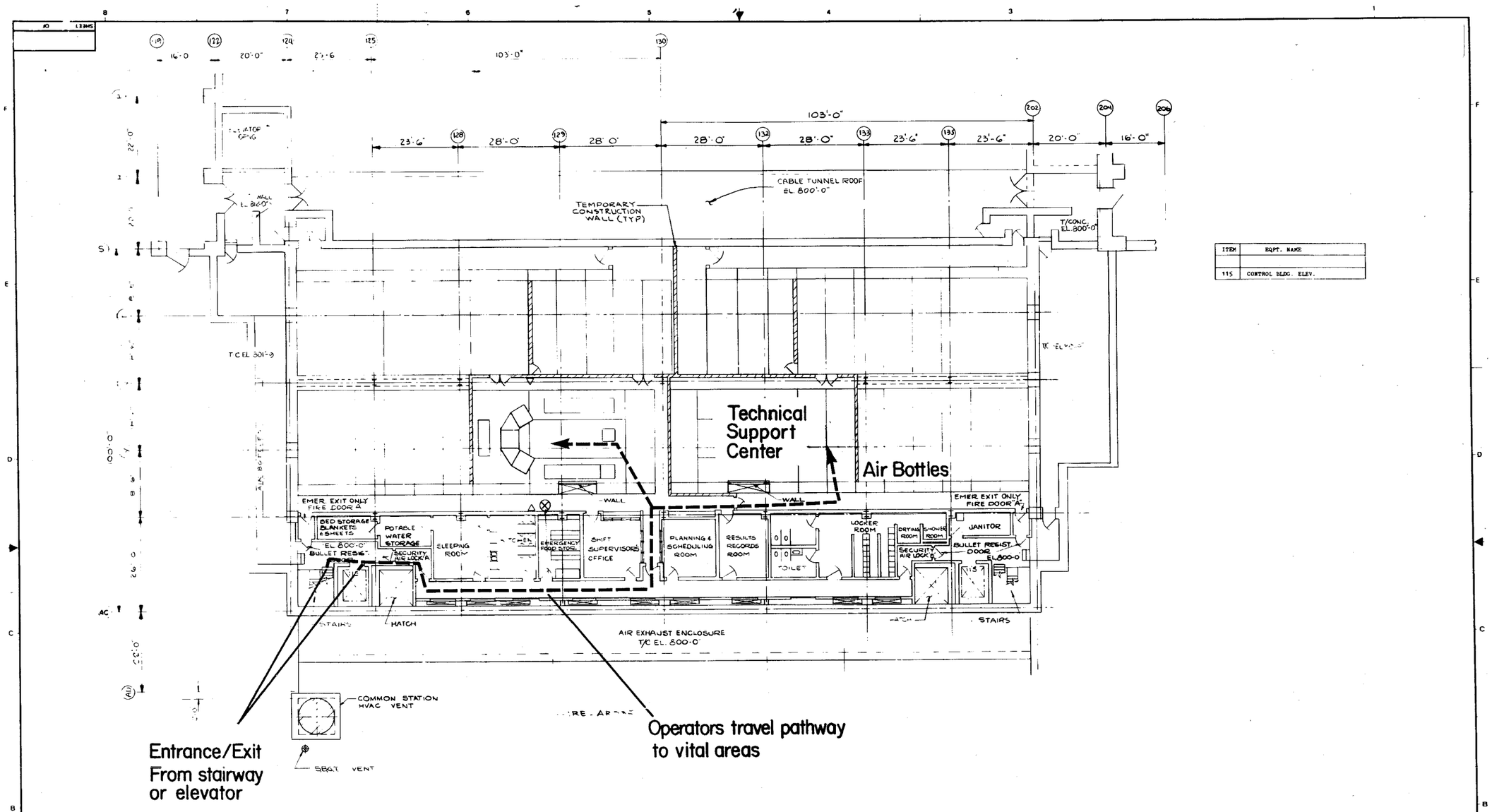

ITEM	EQPT. NAME
115	CONTROL BLDG. ELEV.

RADIATION ZONE MAP
ONE HOUR AFTER ACCIDENT

FOR THE ZONE DESCRIPTIONS SEE SHEET 1 OF THIS FIGURE.

NOTE
RADIATION ZONES SHOWN ARE DUE ONLY TO THE POSTACCIDENT RELEASE OF SOURCES. RADIATION LEVELS IN CUBICLES DUE TO NORMAL OPERATION SOURCES ARE NOT SHOWN.

CLINTON POWER STATION
UPDATED SAFETY ANALYSIS REPORT

FIGURE D-4

POSTACCIDENT RADIATION ZONE MAPS TO VITAL AREAS

(SHEET 3 of 3)

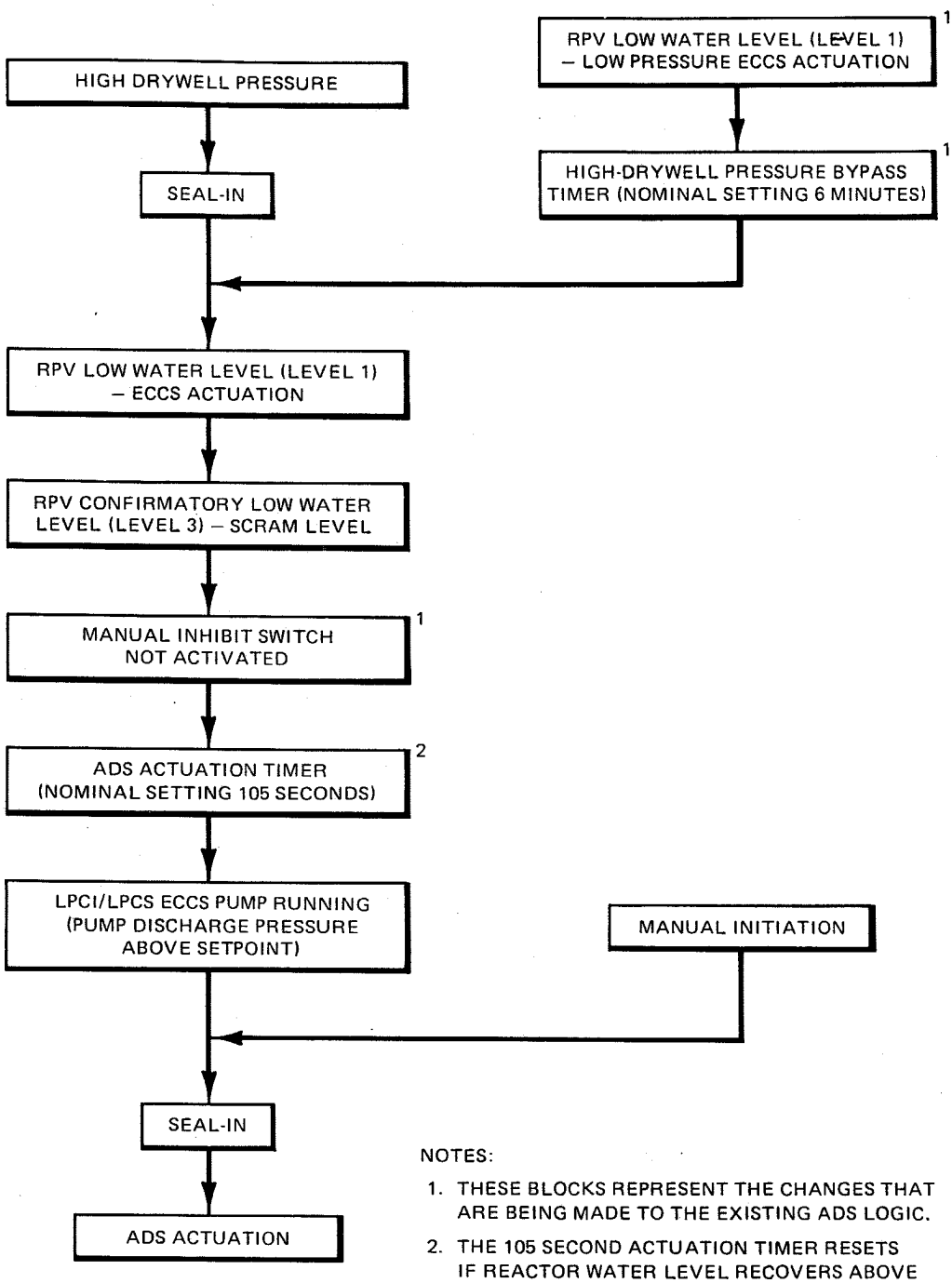

NOTES:

1. THESE BLOCKS REPRESENT THE CHANGES THAT ARE BEING MADE TO THE EXISTING ADS LOGIC.
2. THE 105 SECOND ACTUATION TIMER RESETS IF REACTOR WATER LEVEL RECOVERS ABOVE TRIP ELEVATION BEFORE IT TIMES OUT. THE TIMER RESTARTS IF THE LOW RPV WATER LEVEL SIGNAL OCCURS AGAIN.

Figure D-5 ADS INITIATION LOGIC MODIFICATION

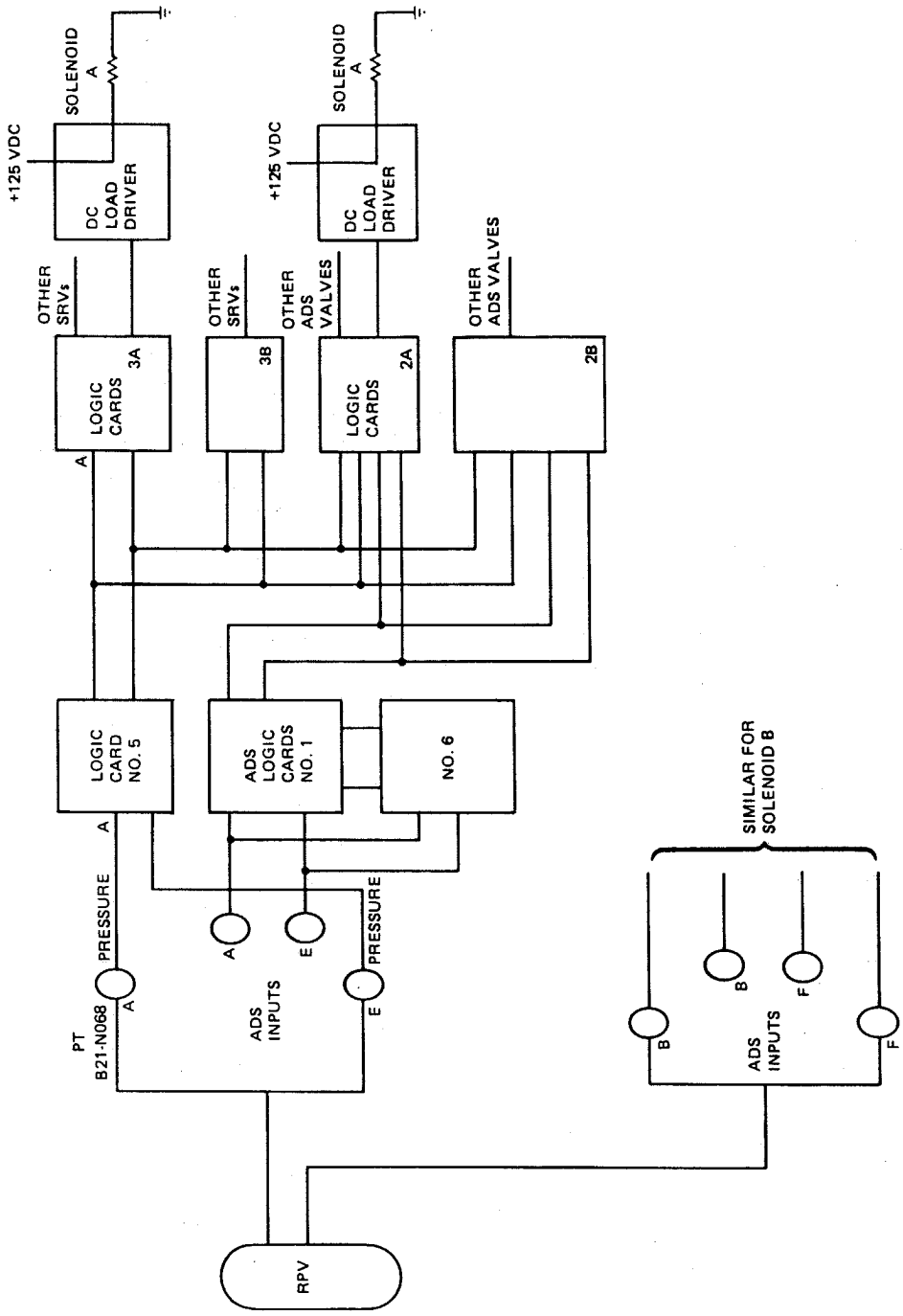

CLINTON POWER STATION
UPDATED SAFETY ANALYSIS REPORT

FIGURE D-6

SIMPLIFIED ADS/SRV SOLID STATE LOGIC - ORIGINAL DESIGN

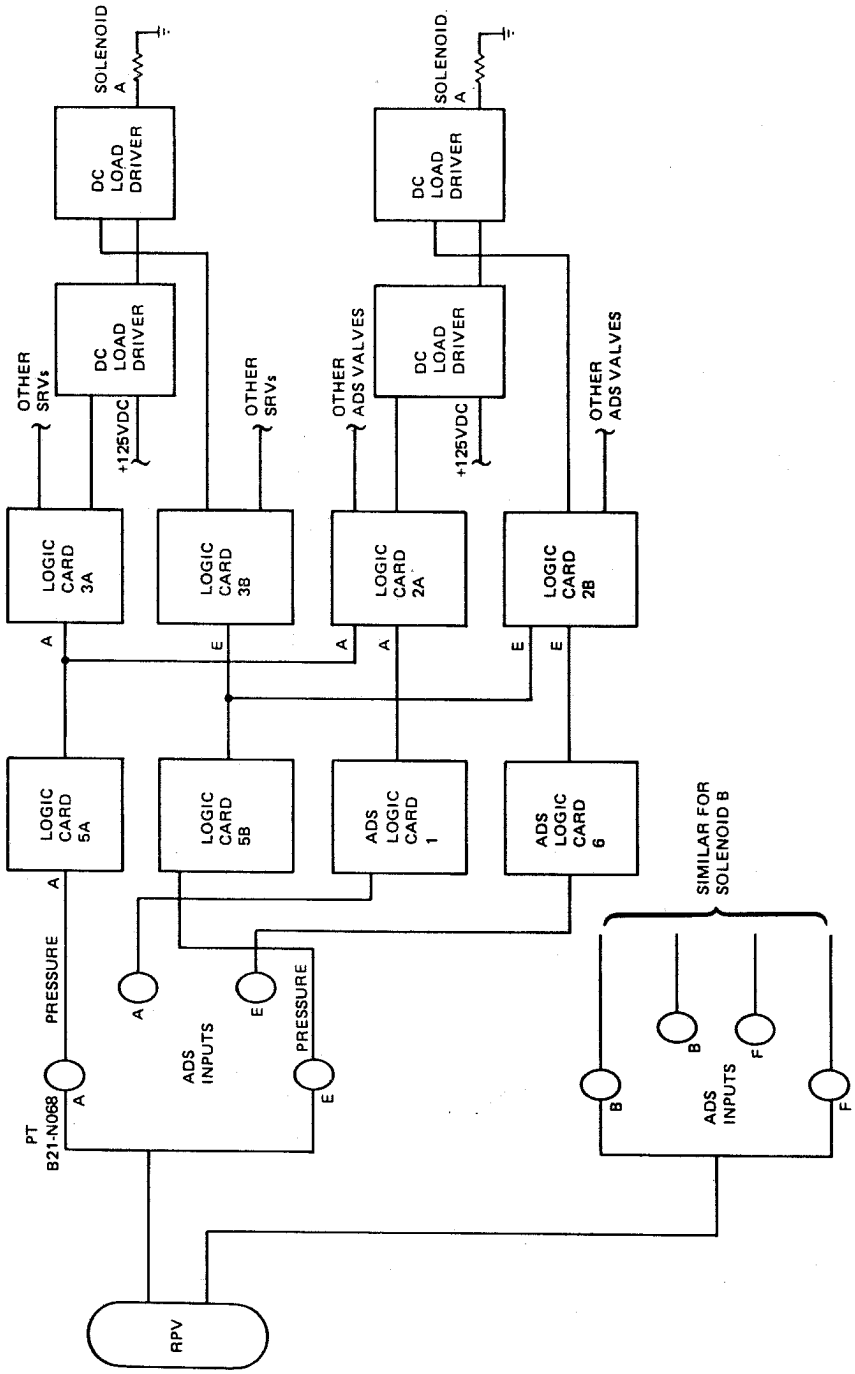

CLINTON POWER STATION
UPDATED SAFETY ANALYSIS REPORT

FIGURE D-7

SIMPLIFIED ADS/SRV SOLID STATE LOGIC - MODIFIED DESIGN