CHAPTER 9 - AUXILIARY SYSTEMS

TABLE OF CONTENTS

		PAGE
9	AUXILIARY SYSTEMS	9.1-1
9.1	FUEL STORAGE AND HANDLING	9.1-1
9.1.1	New Fuel Storage	9.1-1
9.1.1.1	Design Bases	9.1-1
9.1.1.1.1	Storage Design Bases	9.1-1
9.1.1.1.2	Safety Design Bases - Structural	9.1-1
9.1.1.1.3	Safety Design Bases - Nuclear	9.1-1
9.1.1.2	Facilities Description	9.1-2
9.1.1.3	Safety Evaluation	9.1-2
9.1.1.3.1	Criticality Control	9.1-2
9.1.1.3.2	New Fuel Rack Design	9.1-3
9.1.1.3.3	Protective Features of New Fuel Storage Vault	9.1-4
9.1.2	Spent Fuel Storage	9.1-4
9.1.2.1	Design Bases	9.1-4
9.1.2.1.1	Safety Design Bases	9.1-4
9.1.2.1.1.1	Safety Design Bases - Structural	9.1-4
9.1.2.1.1.2	Safety Bases - Nuclear	9.1-5
9.1.2.1.2	Power Generation Design Bases	9.1-5
9.1.2.2	Facilities Description	9.1-5
9.1.2.2.1	Fuel Building Spent Fuel Storage Pool and Fuel Cask Storage Pool	9.1-5
9.1.2.2.1.1	Spent Fuel Storage Array	9.1-5
9.1.2.2.1.2	Rack Construction	9.1-5
9.1.2.2.1.3	Storage Cell Construction	9.1-5
9.1.2.2.1.4	Spacing	9.1-5
9.1.2.2.1.5	Capacity	9.1-6
9.1.2.2.1.6	Fuel Containment	9.1-6
9.1.2.2.2	Upper Containment Fuel Storage Pool	9.1-6
9.1.2.2.2.1	Rack Construction	9.1-6
9.1.2.2.2.2	Spacing	9.1-6
9.1.2.2.2.3	Capacity	9.1-6
9.1.2.2.2.4	Fuel Containment	9.1-6
9.1.2.3	Safety Evaluation	9.1-7
9.1.2.3.1	Criticality Control	9.1-7
9.1.2.3.1.1	Design Analyses for Spent Fuel Pool	9.1-7
9.1.2.3.1.2	Design Analyses for Upper Containment Fuel Pool	9.1-7
9.1.2.3.1.3	Analytical Methods	9.1-8
9.1.2.3.1.4	Use of Poison in the Fuel Building Spent Fuel Storage Pool Racks	9.1-8
9.1.2.3.2	Control of Other Hazards	9.1-8
9.1.2.3.2.1	Radiation	9.1-8

TABLE OF CONTENTS (Cont'd)

		PAGE
9.1.2.3.2.2	Corrosion	9.1-9
9.1.2.3.2.3	Earthquakes	9.1-9
9.1.2.3.2.4	Impact Forces	9.1-9
9.1.2.3.2.5	Pull-Up Forces	9.1-9
9.1.2.3.2.6	Tornadoes	9.1-9
9.1.2.3.2.7	Fire	9.1-10
9.1.2.3.2.8	Pipe Breaks	9.1-10
9.1.2.4	Testing and Inspection	9.1-10
9.1.2.5	Summary of Radiological Considerations	9.1-10
9.1.3	Spent Fuel Pool Cooling and Cleanup System	9.1-10
9.1.3.1	Design Bases	9.1-10
9.1.3.1.1	Safety Design Bases	9.1-10
9.1.3.1.2	Power Generation Design Bases	9.1-10
9.1.3.2	System Description	9.1-12
9.1.3.3	Safety Evaluation	9.1-14
9.1.3.3.1	Decay Heat Load Cases	9.1-15
9.1.3.3.2	Acceptance Criteria	9.1-15
9.1.3.3.3	Peak Spent Fuel Pool Temperature Analysis Results and Conclusion	9.1-16
9.1.3.4	Inspection and Testing Requirements	9.1-18
9.1.3.5	Radiological Considerations	9.1-18
9.1.4	Fuel Handling System	9.1-18
9.1.4.1	Design Bases	9.1-18
9.1.4.2	System Description	9.1-20
9.1.4.2.1	Spent Fuel Cask	9.1-20
9.1.4.2.2	Overhead Bridge Cranes	9.1-20
9.1.4.2.2.1	Containment Polar Crane	9.1-20
9.1.4.2.2.2	Fuel Building Crane	9.1-21
9.1.4.2.3	Fuel Servicing Equipment	9.1-22
9.1.4.2.3.1	Fuel Prep Machine	9.1-22
9.1.4.2.3.2	New Fuel Inspection Stand	9.1-22
9.1.4.2.3.3	Channel Bolt Wrench	9.1-23
9.1.4.2.3.4	Channel Handling Tool	9.1-23
9.1.4.2.3.5	Fuel Pool Sipper	9.1-23
9.1.4.2.3.6	General Purpose Grapple	9.1-23
9.1.4.2.3.7	Jib Crane	9.1-23
9.1.4.2.3.8	Fuel Handling Platform	9.1-24
9.1.4.2.3.9	Channel Handling Boom	9.1-24
9.1.4.2.3.10	Fuel Transfer System	9.1-24
9.1.4.2.4	Servicing Aids	9.1-27
9.1.4.2.5	Reactor Vessel Servicing Equipment	9.1-27
9.1.4.2.5.1	Reactor Vessel Service Tools	9.1-27
9.1.4.2.5.2	Steamline Plug	9.1-28
9.1.4.2.5.3	Shroud Head Stud Locking Device Wrench	9.1-28
9.1.4.2.5.4	Head Holding Pedestal	9.1-28
9.1.4.2.5.5	Head Stud Rack	9.1-29

TABLE OF CONTENTS (Cont'd)

		PAGE
9.1.4.2.5.6	Dryer and Separator Strongback	9.1-29
9.1.4.2.5.7	Head Strongback Carousel	9.1-29
9.1.4.2.6	In-Vessel Servicing Equipment	9.1-31
9.1.4.2.7	Refueling Equipment	9.1-31
9.1.4.2.7.1	Refueling Platform	9.1-31
9.1.4.2.7.2	Auxiliary Platform	9.1-31
9.1.4.2.7.3	Fuel Handling Platform	9.1-32
9.1.4.2.8	Storage Equipment	9.1-32
9.1.4.2.9	Under Reactor Vessel Servicing Equipment	9.1-32
9.1.4.2.10	Description of Fuel Transfer	9.1-33
9.1.4.2.10.1	Arrival of Fuel on Site	9.1-33
9.1.4.2.10.2	Refueling Procedure	9.1-33
9.1.4.2.10.2.1	New Fuel Preparation	9.1-35
9.1.4.2.10.2.1.1	Receipt and Inspection of New Fuel	9.1-35
9.1.4.2.10.2.1.2	Channeling New Fuel	9.1-35
9.1.4.2.10.2.1.3	Equipment Preparation	9.1-36
9.1.4.2.10.2.2	Reactor Shutdown	9.1-36
9.1.4.2.10.2.2.1	Drywell Head Removal	9.1-36
9.1.4.2.10.2.2.2	Reactor Well Servicing	9.1-36
9.1.4.2.10.2.3	Reactor Vessel Opening	9.1-36
9.1.4.2.10.2.3.1	Vessel Head Removal	9.1-36
9.1.4.2.10.2.3.2	Dryer Removal	9.1-37
9.1.4.2.10.2.3.3	Separator Removal	9.1-37
9.1.4.2.10.2.3.4	Fuel Bundle Sampling	9.1-37
9.1.4.2.10.2.4	Refueling and Reactor Servicing	9.1-37
9.1.4.2.10.2.4.1	Refueling	9.1-37
9.1.4.2.10.2.5	Vessel Closure	9.1-38
9.1.4.3	Safety Evaluation, Fuel Handling System	9.1-39
9.1.4.4	Inspection and Testing Requirements	9.1-41
9.1.4.4.1	Inspection	9.1-41
9.1.4.4.2	Testing	9.1-41
9.1.4.5	Instrumentation Requirements	9.1-42
9.1.4.5.1	Refueling Platform	9.1-42
9.1.4.5.2	Fuel Support Grapple	9.1-42
9.1.4.5.3	Inclined Fuel Transfer Tube	9.1-43
9.1.4.5.4	Other	9.1-43
9.1.4.5.5	Radiation Monitoring	9.1-43
9.1.4.6	Departure of Spent Fuel from Site	9.1-43
9.1.5	References	9.1-44
9.2	WATER SYSTEMS	9.2-1
9.2.1	Station Service Water Systems	9.2-1
9.2.1.1	Plant Service Water Systems	9.2-1
9.2.1.1.1	Power Generation Design Bases	9.2-1
9.2.1.1.2	System Description	9.2-1

TABLE OF CONTENTS (Cont'd)

		PAGE
9.2.1.1.3	Safety Evaluation	9.2-1
9.2.1.1.4	Tests and Inspections	9.2-2
9.2.1.1.5	Instrumentation	9.2-2
9.2.1.2	Shutdown Service Water System (SSWS)	9.2-3
9.2.1.2.1	Design Bases	9.2-3
9.2.1.2.1.1	Safety Design Bases	9.2-3
9.2.1.2.1.2	Power Generation Design Bases	9.2-3
9.2.1.2.2	System Description	9.2-3
9.2.1.2.3	Safety Evaluation	9.2-4
9.2.1.2.4	Tests and Inspections	9.2-6
9.2.1.2.5	Instrumentation	9.2-7
9.2.2	Component Coolinq Water System (CCWS) for Reactor Auxiliaries	9.2-7
9.2.2.1	Power Generation Design Bases	9.2-7
9.2.2.2	System Description	9.2-7
9.2.2.3	Safety Evaluation	9.2-8
9.2.2.4	Tests and Inspections	9.2-9
9.2.2.5	Instrumentation Applications	9.2-9
9.2.3	Demineralized Water Makeup System	9.2-10
9.2.3.1	Design Bases	9.2-10
9.2.3.1.1	Safety Design Bases	9.2-10
9.2.3.1.2	Power Generation Design Bases	9.2-10
9.2.3.2	System Description	9.2-10
9.2.3.3	Safety Evaluation	9.2-11
9.2.3.4	Tests and Inspections	9.2-12
9.2.3.5	Instrumentation Application	9.2-12
9.2.4	Potable and Sanitary Water Systems	9.2-13
9.2.4.1	Design Bases	9.2-13
9.2.4.1.1	Safety Design Bases	9.2-13
9.2.4.1.2	Power Generation Design Bases	9.2-13
9.2.4.2	System Description	9.2-14
9.2.4.3	Safety Evaluation	9.2-14
9.2.4.4	Testing and Inspection	9.2-14
9.2.5	Ultimate Heat Sink	9.2-14
9.2.5.1	Design Bases	9.2-14
9.2.5.2	System Description	9.2-14
9.2.5.3	Safety Evaluation	9.2-16
9.2.5.4	Testing and Inspection	9.2-19
9.2.5.5	Instrumentation Application	9.2-19
9.2.6	Condensate Storage Facilities	9.2-19
9.2.6.1	Design Bases	9.2-19
9.2.6.1.1	Safety Design Bases	9.2-19
9.2.6.1.2	Power Generation Design Bases	9.2-19
9.2.6.2	System Description	9.2-20
9.2.6.3	Safety Evaluation	9.2-20
9.2.6.4	Tests and Inspections	9.2-20

TABLE OF CONTENTS (Cont'd)

		PAGE
9.2.6.5	Instrumentation Application	9.2-21
9.2.7	Turbine Building Closed Cooling Water System	9.2-21
9.2.7.1	Power Generation Design Bases	9.2-21
9.2.7.2	System Description	9.2-22
9.2.7.3	Safety Evaluation	9.2-22
9.2.7.4	Tests and Inspections	9.2-22
9.2.7.5	Instrumentation Applications	9.2-22
9.2.8	Chilled Water Systems	9.2-23
9.2.8.1	Control Room Chilled Water System	9.2-23
9.2.8.1.1	Design Bases	9.2-23
9.2.8.1.1.1	Safety Design Bases	9.2-23
9.2.8.1.1.2	Power Generation Design Bases	9.2-23
9.2.8.1.2	System Descriptions	9.2-23
9.2.8.1.3	Safety Evaluation	9.2-25
9.2.8.1.4	Testing and Inspection	9.2-25
9.2.8.2	Drywell Chilled Water System	9.2-25
9.2.8.2.1	Design Bases	9.2-25
9.2.8.2.1.1	Safety Design Bases	9.2-25
9.2.8.2.1.2	Power Generation Design Bases	9.2-26
9.2.8.2.2	System Description	9.2-26
9.2.8.2.3	Safety Evaluation	9.2-28
9.2.8.2.4	Testing and Inspection	9.2-28
9.2.8.3	Plant Chilled Water System	9.2-28
9.2.8.3.1	Design Bases	9.2-28
9.2.8.3.1.1	Safety Design Bases	9.2-28
9.2.8.3.1.2	Power Generation Design Bases	9.2-29
9.2.8.3.2	System Description	9.2-29
9.2.8.3.3	Safety Evaluation	9.2-31
9.2.8.3.4	Testing and Inspection	9.2-31
9.2.8.4	Service Building Chilled Water System	9.2-32
9.2.8.4.1	Design Bases	9.2-32
9.2.8.4.1.1	Safety Design Bases	9.2-32
9.2.8.4.1.2	Power Generation Design Bases	9.2-32
9.2.8.4.2	System Description	9.2-32
9.2.8.4.3	Safety Evaluation	9.2-33
9.2.8.4.4	Testing and Inspection	9.2-33
9.2.8.5	Deleted	9.2-33
9.3	PROCESS AUXILIARIES	9.3-1
9.3.1	Compressed Air Systems	9.3-1
9.3.1.1	Design Bases	9.3-1
9.3.1.1.1	Safety Design Bases	9.3-1
9.3.1.1.2	Power Generation Design Bases	9.3-1
9.3.1.2	System Description	9.3-1
9.3.1.3	Safety Evaluation	9.3-3

TABLE OF CONTENTS (Cont'd)

		PAGE
9.3.1.4	Test and Inspections	9.3-3
9.3.1.5	Instrumentation Application	9.3-4
9.3.2	Process Sampling System	9.3-5
9.3.2.1	Design Bases	9.3-5
9.3.2.1.1	Safety Design Bases	9.3-5
9.3.2.1.2	Power Generation Design Bases	9.3-5
9.3.2.2	System Description	9.3-5
9.3.2.3	Safety Evaluation	9.3-6
9.3.2.4	Tests and Inspections	9.3-7
9.3.2.5	Instrumentation Application	9.3-7
9.3.3	Equipment and Floor Drainage System	9.3-8
9.3.3.1	Design Bases	9.3-8
9.3.3.1.1	Safety Design Bases	9.3-8
9.3.3.1.2	Power Generation Design Bases	9.3-8
9.3.3.2	System Description	9.3-9
9.3.3.2.1	General Description	9.3-9
9.3.3.2.2	Component Description	9.3-9
9.3.3.3	Safety Evaluation	9.3-10
9.3.3.4	Tests and Inspection	9.3-10
9.3.3.5	Instrumentation Application	9.3-10
9.3.4	Chemical and Volume Control System	9.3-11
9.3.5	Standby Liquid Control System	9.3-11
9.3.5.1	Design Bases	9.3-11
9.3.5.1.1	Safety Design Bases	9.3-11
9.3.5.2	System Description	9.3-11
9.3.5.3	Safety Evaluation	9.3-13
9.3.5.3.1	Evaluation Against General Design Criteria	9.3-14
9.3.5.3.2	Evaluation Against Regulatory Guides	9.3-15
9.3.5.4	Testing and Inspection Requirements	9.3-16
9.3.5.5	Instrumentation Requirements	9.3-16
9.3.6	Suppression Pool Cleanup System	9.3-16
9.3.6.1	Design Bases	9.3-16
9.3.6.1.1	Safety Design Bases	9.3-16
9.3.6.1.2	Power Generation Design Bases	9.3-17
9.3.6.2	System Description	9.3-17
9.3.6.3	Safety Evaluation	9.3-18
9.3.6.4	Tests and Inspections	9.3-18
9.3.6.5	Instrumentation Application	9.3-18
9.3.7	Post Accident Sample System (PASS)	9.3-18
9.3.7.1	Design Basis	9.3-18
9.3.7.1.1	Safety Design Basis	9.3-18
9.3.7.1.2	Power Generation Design Basis	9.3-19
9.3.7.2	System Description	9.3-19
9.3.7.3	Safety Evaluation	9.3-21
9.3.7.4	Test and Inspections	9.3-21
9.3.7.5	Training	9.3-21

TABLE OF CONTENTS (Cont'd)

		PAGE
9.3.7.6	Instrumentation Application	9.3-21
9.4	HEATING, VENTILATING AND AIR-CONDITIONING (HVAC) SYSTEMS	9.4-1
9.4.1	Control Room HVAC System	9.4-1
9.4.1.1	Design Bases	9.4-1
9.4.1.1.1	Safety Design Bases	9.4-2
9.4.1.2	System Description	9.4-3
9.4.1.3	Safety Evaluation	9.4-5
9.4.1.4	Testing and Inspection	9.4-7
9.4.1.5	Instrumentation Application	9.4-8
9.4.2	Fuel Building HVAC System	9.4-9
9.4.2.1	Design Bases	9.4-9
9.4.2.1.1	Safety Design Bases	9.4-9
9.4.2.1.2	Power Generation Design Bases	9.4-9
9.4.2.2	System Description	9.4-10
9.4.2.3	Safety Evaluation	9.4-11
9.4.2.4	Testing and Inspection	9.4-12
9.4.3	Auxiliary Building HVAC System	9.4-12
9.4.3.1	Design Bases	9.4-12
9.4.3.1.1	Safety Design Bases	9.4-12
9.4.3.1.2	Power Generation Design Bases	9.4-13
9.4.3.2	System Description	9.4-13
9.4.3.3	Safety Evaluation	9.4-14
9.4.3.4	Testing and Inspection	9.4-14
9.4.3.5	Instrumentation Application	9.4-14
9.4.4	Turbine Building Area HVAC System	9.4-15
9.4.4.1	Design Bases	9.4-15
9.4.4.1.1	Safety Design Bases	9.4-15
9.4.4.1.2	Power Generation Design Bases	9.4-15
9.4.4.2	System Description	9.4-16
9.4.4.3	Safety Evaluation	9.4-17
9.4.4.4	Testing and Inspection	9.4-17
9.4.5	Engineered Safety Features Ventilation Systems	9.4-18
9.4.5.1	Diesel-Generator Facilities Ventilation System	9.4-18
9.4.5.1.1	Design Bases	9.4-18
9.4.5.1.1.1	Safety Design Bases	9.4-18
9.4.5.1.1.2	Power Generation Design Bases	9.4-19
9.4.5.1.2	System Description	9.4-19
9.4.5.1.3	Safety Evaluation	9.4-20
9.4.5.1.4	Inspection and Testing	9.4-21
9.4.5.2	Switchgear Heat Removal System	9.4-21
9.4.5.2.1	Design Bases	9.4-21
9.4.5.2.1.1	Safety Design Bases	9.4-21
9.4.5.2.1.2	Power Generation Design Bases	9.4-22

TABLE OF CONTENTS (Cont'd)

		PAGE
9.4.5.2.2	System Description	9.4-22
9.4.5.2.3	Safety Evaluation	9.4-23
9.4.5.2.4	Testing and Inspection	9.4-24
9.4.5.3	ECCS Equipment Area Cooling System	9.4-24
9.4.5.3.1	Design Bases	9.4-24
9.4.5.3.1.1	Safety Design Bases	9.4-24
9.4.5.3.1.2	Power Generation Design Bases	9.4-25
9.4.5.3.2	System Description	9.4-25
9.4.5.3.3	Safety Evaluation	9.4-26
9.4.5.3.4	Testing and Inspection	9.4-27
9.4.5.4	Shutdown Service Water Pump Room Cooling System	9.4-27
9.4.5.4.1	Design Bases	9.4-27
9.4.5.4.1.1	Safety Design Bases	9.4-27
9.4.5.4.1.2	Power Generation Design Bases	9.4-28
9.4.5.4.2	System Description	9.4-28
9.4.5.4.3	Safety Evaluation	9.4-29
9.4.5.4.4	Testing and Inspection	9.4-29
9.4.5.5	CGCS Equipment Cubicle Cooling System	9.4-30
9.4.5.5.1	Design Bases	9.4-30
9.4.5.5.1.1	Safety Design Bases	9.4-30
9.4.5.5.1.2	Power Generation Design Bases	9.4-31
9.4.5.5.2	System Description	9.4-31
9.4.5.5.3	Safety Evaluation	9.4-31
9.4.5.5.4	Testing and Inspection	9.4-31
9.4.6	Containment Building Ventilation and Continuous Containment Purge Systems	9.4-32
9.4.6.1	Design Bases	9.4-33
9.4.6.1.1	Safety Design Bases	9.4-33
9.4.6.1.1.1	Containment Building Ventilation System Safety Design Bases	9.4-33
9.4.6.1.1.2	Continuous Containment Purge System Safety Design Bases	9.4-35
9.4.6.1.2	Power Generation Design Bases	9.4-35
9.4.6.1.2.1	Containment Building Ventilation System Power Generation Design Bases	9.4-35
9.4.6.1.2.2	Continuous Containment Purge System Power Generation Design Bases	9.4-36
9.4.6.2	System Description	9.4-37
9.4.6.2.1	Containment Building Ventilation System Description	9.4-37
9.4.6.2.2	Continuous Containment Purge System Description	9.4-39
9.4.6.3	Safety Evaluation	9.4-41
9.4.6.3.1	Containment Building Ventilation System Safety Evaluation	9.4-41
9.4.6.3.2	Continuous Containment Purge System Safety Evaluation	9.4-42
9.4.6.4	Testing and Inspection	9.4-44
9.4.6.4.1	Containment Building Ventilation System Testing and Inspection	9.4-44
9.4.6.4.2	Continuous Containment Purge System Testing and Inspection	9.4-44

TABLE OF CONTENTS (Cont'd)

		PAGE
9.4.7	Drywell HVAC Systems	9.4-44
9.4.7.1	Drywell Cooling System	9.4-45
9.4.7.1.1	Design Bases	9.4-45
9.4.7.1.1.1	Safety Design Bases	9.4-45
9.4.7.1.1.2	Power Generation Design Bases	9.4-45
9.4.7.1.2	System Description	9.4-45
9.4.7.1.3	Safety Evaluation	9.4-46
9.4.7.1.4	Testing and Inspection	9.4-47
9.4.7.2	Drywell Purge System	9.4-47
9.4.7.2.1	Design Bases	9.4-47
9.4.7.2.1.1	Safety Design Bases	9.4-47
9.4.7.2.1.2	Power Generation Design Bases	9.4-48
9.4.7.2.2	System Description	9.4-49
9.4.7.2.3	Safety Evaluation	9.4-50
9.4.7.2.4	Testing and Inspection	9.4-51
9.4.8	Off-Gas Vault Refrigeration System	9.4-52
9.4.8.1	Design Bases	9.4-52
9.4.8.1.1	Safety Design Bases	9.4-52
9.4.8.1.2	Power Generation Objectives	9.4-52
9.4.8.2	System Description	9.4-52
9.4.8.3	Safety Evaluation	9.4-53
9.4.8.4	Testing and Inspection	9.4-53
9.4.9	Machine Shop Area HVAC System	9.4-54
9.4.9.1	Design Bases	9.4-54
9.4.9.1.1	Safety Design Bases	9.4-54
9.4.9.1.2	Power Generation Design Bases	9.4-54
9.4.9.2	System Description	9.4-54
9.4.9.3	Safety Evaluation	9.4-56
9.4.9.4	Testing and Inspection	9.4-56
9.4.10	Circulating Water Screen House Ventilation System	9.4-56
9.4.10.1	Design Bases	9.4-57
9.4.10.1.1	Safety Design Bases	9.4-57
9.4.10.1.2	Power Generation Design Bases	9.4-57
9.4.10.2	System Description	9.4-57
9.4.10.3	Safety Evaluation	9.4-58
9.4.10.4	Testing and Inspection	9.4-58
9.4.11	Laboratory HVAC System	9.4-59
9.4.11.1	Design Bases	9.4-59
9.4.11.1.1	Safety Design Bases	9.4-59
9.4.11.1.2	Power Generation Design Bases	9.4-59
9.4.11.2	System Description	9.4-60
9.4.11.3	Safety Evaluation	9.4-61
9.4.11.4	Testing and Inspection	9.4-61
9.4.12	Service Building HVAC System	9.4-61
9.4.12.1	Design Bases	9.4-62
9.4.12.1.1	Safety Design Bases	9.4-62

TABLE OF CONTENTS (Cont'd)

		PAGE
9.4.12.1.2	Power Generation Design Bases	9.4-62
9.4.12.2	System Description	9.4-62
9.4.12.3	Safety Evaluation	9.4-63
9.4.12.4	Testing and Inspection	9.4-64
9.4.13	Radwaste Building Area Ventilation System	9.4-64
9.4.13.1	Design Bases	9.4-64
9.4.13.1.1	Safety Design Bases	9.4-64
9.4.13.1.2	Power Generation Design Bases	9.4-64
9.4.13.2	System Description	9.4-65
9.4.13.3	Safety Evaluation	9.4-66
9.4.13.4	Testing and Inspection	9.4-67
9.4.13.5	Instrumentation Application	9.4-67
9.5	OTHER AUXILIARY SYSTEMS	9.5-1
9.5.1	Fire Protection System	9.5-1
9.5.1.1	Design Bases	9.5-4
9.5.1.1.1	Design Bases, Control Room	9.5-6
9.5.1.2	System Description	9.5-7
9.5.1.2.1	General Description	9.5-7
9.5.1.2.1.1	Control Room General Description	9.5-7
9.5.1.2.2	System Operation	9.5-8
9.5.1.2.2.1	Fire Protection System Central Control Station	9.5-8
9.5.1.2.2.2	Fire Protection Water Supply System	9.5-9
9.5.1.2.2.3	Water Sprinkler and Hose Standpipe Systems	9.5-10
9.5.1.2.2.4	Halon Suppression Systems	9.5-12
9.5.1.2.2.5	Carbon Dioxide Fire Suppression System	9.5-12
9.5.1.2.2.6	Water Mist Suppression System	9.5-13
9.5.1.2.2.7	FM-200 Clean Agent suppression System	9.5-14
9.5.1.2.2.8	Portable Extinguishers	9.5-14
9.5.1.2.2.9	Fire Detection System	9.5-14
9.5.1.2.2.10	Incipient Fire Detection and Fire Alarm Panels	9.5-16
9.5.1.2.2.10.1	Incipient Fire Detection (IFD) System	9.5-16
9.5.1.2.2.10.2	Fike Local Alarm Control Panel	9.5-16
9.5.1.2.2.11	Turbine Building Smoke Vents	9.5-17
9.5.1.2.2.12	Control Room Fire Protection System Operation	9.5-17
9.5.1.2.2.12.1	Gaseous Extinguishing Systems	9.5-17
9.5.1.2.2.12.2	Fire Protection Zones	9.5-17
9.5.1.2.2.12.3	Fire Control Cabinet	9.5-17
9.5.1.2.2.12.4	Halon Storage Container	9.5-17
9.5.1.2.2.12.5	Detectors	9.5-18
9.5.1.3	Safety Evaluation (Fire Hazards Analysis)	9.5-18
9.5.1.4	Inspection and Testing Requirements	9.5-18
9.5.1.4.1	Control Room Fire Protection Inspection and Testing Requirements	9.5-19
9.5.1.5	Personnel Qualification and Training	9.5-20

TABLE OF CONTENTS (Cont'd)

		PAGE
9.5.1.5.1	Fire Protection Engineer	9.5-20
9.5.1.5.2	Training Requirements	9.5-20
9.5.1.5.3	Administrative Controls	9.5-20
9.5.1.5.4	Quality Assurance Requirements	9.5-21
9.5.2	Communication Systems	9.5-21
9.5.2.1	Design Bases	9.5-21
9.5.2.2	System Description	9.5-22
9.5.2.2.1	Public Address System	9.5-25
9.5.2.2.2	Dial Telephone System	9.5-26
9.5.2.2.3	Sound Powered Telephone System	9.5-26
9.5.2.2.4	Intraplant Radio System	9.5-26
9.5.2.2.5	Fiber Optic Communication System	9.5-26
9.5.2.2.6	CPS Emergency Field Team Radio System	9.5-26
9.5.2.2.7	Personal Communication System	9.5-27
9.5.2.3	Inspection and Testing	9.5-27
9.5.3	Lighting System	9.5-27
9.5.3.1	General Design	9.5-27
9.5.3.1.1	A-C Normal Station Lighting	9.5-29
9.5.3.1.2	A-C Standby Lighting System	9.5-29
9.5.3.1.3	Emergency Lighting System	9.5-29
9.5.3.1.4	Battery Pack Emergency Lighting System	9.5-29
9.5.3.2	Safety Evaluation	9.5-29
9.5.4	Diesel-Generator Fuel Oil Storage and Transfer System	9.5-30
9.5.4.1	Design Bases	9.5-30
9.5.4.1.1	Safety Design Bases	9.5-30
9.5.4.2	System Description	9.5-31
9.5.4.3	Safety Evaluation	9.5-33
9.5.4.4	Tests and Inspections	9.5-35
9.5.4.5	Instrumentation Application	9.5-35
9.5.5	Diesel-Generator Cooling Water System	9.5-35
9.5.5.1	Safety Design Bases	9.5-35
9.5.5.2	System Description	9.5-36
9.5.5.3	Safety Evaluation	9.5-39
9.5.5.4	Tests and Inspections	9.5-39
9.5.5.5	Instrumentation Application	9.5-39
9.5.6	Diesel-Generator Starting System	9.5-40
9.5.6.1	Design Bases	9.5-40
9.5.6.1.1	Safety Design Bases	9.5-40
9.5.6.2	System Description	9.5-40
9.5.6.3	Safety Evaluation	9.5-41
9.5.6.4	Tests and Inspections	9.5-42
9.5.6.5	Instrumentation Application	9.5-42
9.5.7	Diesel Engine Lubrication System	9.5-42
9.5.7.1	Safety Design Bases	9.5-42
9.5.7.2	System Description	9.5-43
9.5.7.3	Safety Evaluation	9.5-44

TABLE OF CONTENTS (Cont'd)

		PAGE
9.5.7.4	Tests and Inspections	9.5-45
9.5.7.5	Instrumentation Application	9.5-45
9.5.8	Diesel-Generator Combustion Air Intake and Exhaust System	9.5-46
9.5.8.1	Design Bases	9.5-46
9.5.8.1.1	Safety Design Bases	9.5-46
9.5.8.2	System Description	9.5-46
9.5.8.3	Safety Evaluation	9.5-47
9.5.8.4	Tests and Inspections	9.5-49
9.5.8.5	Instrumentation Application	9.5-49
9.5.9	Auxiliary Steam System	9.5-49
9.5.9.1	Power Generation Design Bases	9.5-49
9.5.9.2	System Description	9.5-49
9.5.9.3	Safety Evaluation	9.5-50
9.5.9.4	Tests and Inspections	9.5-51
9.5.9.5	Instrumentation Applications	9.5-51

CHAPTER 9 - AUXILIARY SYSTEMS

LIST OF TABLES

NUMBER	TITLE	PAGE
9.1-1	Tools and Servicing Equipment	9.1-45
9.1-2	Fuel Servicing Equipment	9.1-46
9.1-3	Fuel Transfer System Components	9.1-47
9.1-4	Reactor Vessel Servicing Equipment	9.1-49
9.1-5	Under-Reactor Vessel Servicing Equipment and Tools	9.1-50
9.2-1	Equipment Cooled by the Plant Service Water System (PSWS)	9.2-34
9.2-2	Plant Service Water System Component Description	9.2-36
9.2-3	Ultimate Heat Sink Auxiliary Loads from the Shutdown Service Water System	9.2-37
9.2-4	Shutdown Service Water System Component Description	9.2-38
9.2-5	Shutdown Service Water System Passive Failure Analysis	9.2-39
9.2-6	Shutdown Service Water System Active Failure Analysis	9.2-40
9.2-7	Equipment Cooled by the Component Cooling Water System	9.2-41
9.2-8	Component Cooling Water System Component Description	9.2-42
9.2-9	Makeup Condensate Storage System Component Data	9.2-43
9.2-10	Demineralized Water Makeup System Major Components and Their Design Data	9.2-44
9.2-11	Ultimate Heat Sink Heat Load	9.2-46
9.2-12	Deleted	9.2-47
9.2-13	Heat Rejection Rates for Unit 1 Under LOCA or Unit 2 Under LOOP	9.2-48
9.2-14	Thermal Parameters of the Pond	9.2-49
9.2-15	Capability of the Pond	9.2-50
9.2-16	Condensate Storage Facility Component Data	9.2-51
9.2-17	Equipment Cooled by the Turbine Building Closed Cooling Water System	9.2-52
9.2-18	Turbine Building Closed Cooling Water System Component Description	9.2-53
9.2-19	Control Room Chilled Water System	9.2-54
9.2-20	Drywell Chilled Water System Equipment Parameters	9.2-55
9.2-21	Plant Chilled Water System	9.2-56
9.2-22	Service Building Chilled Water System	9.2-57
9.3-1	Compressed Air System Component Data	9.3-23
9.3-2	Compressed Air System Failure Analysis	9.3-26
9.3-3	Process Sample Tabulation	9.3-27
9.3-4	Standby Liquid Control System Normal Operating Pressure/Temperature Conditions	9.3-32
9.3-5	Post Accident Sample System	9.3-34
9.4-1	Control Room HVAC System	9.4-69
9.4-2	Control Room Heating, Ventilating, and Air Conditioning System Failure Analysis	9.4-73

LIST OF TABLES (Cont'd)

NUMBER	TITLE	PAGE
9.4-3	Fuel Building HVAC System	9.4-74
9.4-4	Fuel Building Heating, Ventilating, and Air Conditioning System Failure Analysis	9.4-76
9.4-5	Auxiliary Building HVAC System	9.4-77
9.4-6	Auxiliary Building Heating, Ventilating, and Air Conditioning System Failure Analysis	9.4-79
9.4-7	Turbine Building Ventilation System	9.4-80
9.4-8	Turbine Building Ventilation System Failure Analysis	9.4-82
9.4-9	Diesel-Generator Facilities Ventilation System Equipment Parameters	9.4-83
9.4-10	Diesel-Generator Facilities Ventilation System Failure Analysis	9.4-85
9.4-11	Switchgear Heat Removal System	9.4-86
9.4-12	Switchgear Heat Removal System Failure Analysis	9.4-90
9.4-13	ECCS Equipment Area Cooling System	9.4-91
9.4-14	ECCS Equipment Area Cooling System Failure Analysis	9.4-96
9.4-15	Shutdown Service Water Pump Room Cooling System	9.4-97
9.4-16	Shutdown Service Water Pump Room Cooling System Failure Analysis	9.4-99
9.4-17	CGCS Equipment Cubicle Cooling System	9.4-100
9.4-18	CGCS Equipment Cubicle Cooling System Failure Analysis	9.4-101
9.4-19	Containment Building Ventilation System	9.4-102
9.4-19A	Continuous Containment Purge System	9.4-104
9.4-20	Containment Building Ventilation System Failure Analysis	9.4-106
9.4-20A	Continuous Containment Purge System Failure Analysis	9.4-107
9.4-21	Drywell Cooling HVAC System Equipment Parameters	9.4-108
9.4-22	Drywell Cooling HVAC System Failure Analysis	9.4-110
9.4-23	Drywell Purge System	9.4-111
9.4-24	Drywell Purge System Failure Analysis	9.4-114
9.4-25	Off-Gas Vault Refrigeration System	9.4-115
9.4-26	Off-Gas Vault Refrigeration System Failure Analysis	9.4-117
9.4-27	Machine Shop Ventilation System	9.4-118
9.4-28	Machine Shop Ventilation System Failure Analysis	9.4-121
9.4-29	Circulating Water Screen House Ventilation System	9.4-122
9.4-30	Circulating Water Screen House Ventilation System Failure Analysis	9.4-124
9.4-31	Laboratory HVAC System	9.4-125
9.4-32	Service Building HVAC System	9.4-130
9.4-33	Radwaste Building Area Ventilation System	9.4-139
9.4-34	Radwaste Building Ventilation System Failure Analysis	9.4-141
9.5-1	Diesel-Generator Fuel Oil System Component Data	9.5-52
9.5-2	Failure Analysis of Diesel-Generator Fuel Oil System	9.5-53
9.5-3	Diesel-Generator Cooling Water System Component Data	9.5-54
9.5-4	Diesel-Generator Starting Air Systems Components	9.5-56
9.5-5	Deleted	9.5-57
9.5-6	Diesel-Generators Combustion Air Intake and Exhaust System Components	9.5-58
9.5-7	Auxiliary Steam System Equipment	9.5-59

LIST OF TABLES (Cont'd)

NUMBER	TITLE	PAGE
9.5-8	Failure Analysis of Diesel Generator Cooling Water System	9.5-60
9.5-9	Moderate Energy Lines Located in the Diesel Generator Rooms	9.5-61
9.5-10	Failure Analysis for Divisions 1 and 2 Diesel Generator Starting Air System	9.5-62
9.5-11	Failure Analysis for Divisions 1 and 2 Diesel Generator Lubrication System	9.5-63
9.5-12	Lighting System Tabulation	9.5-64
9.5-13	Diesel Engine Instrumentation	9.5-65

CHAPTER 9 - AUXILIARY SYSTEMS

LIST OF FIGURES

NUMBER	TITLE
9.1-1	New Fuel Storage Vault
9.1-2a	Fuel Storage Rack Arrangement (Spent Fuel Pool)
9.1-2b	Upper Containment Fuel Storage Rack
9.1-2c	Fuel Storage Rack Arrangement (Cask Storage Pool)
9.1-3a	Eccentric Fuel Positioning
9.1-3b	Fuel Stored in Control Rod Racks
9.1-3c	Abnormal Fuel Storage Conditions
9.1-4	Deleted
9.1-5	Fuel Preparation Machine Shown Installed in Fuel Pool
9.1-6	New Fuel Inspection Stand
9.1-7	Channel Bolt Wrench
9.1-8	Channel Handling Tool
9.1-9	Fuel Pool Sipper
9.1-10	Deleted
9.1-11	General-Purpose Grapple
9.1-12	Jib Crane
9.1-13	Deleted
9.1-14	Transfer Tube
9.1-15	Plant Refueling and Servicing Sequence
9.1-16	Deleted
9.1-17	Simplified Section of New Fuel Handling Facilities (Fuel Building)
9.1-18	Simplified Section of Refueling Facilities (Reactor Building)
9.1-18a	Drywell Head Removal Sequence
9.1-18b	Reactor Vessel Head Removal Sequence
9.1-19	Steam Dryer Removal Sequence
9.1-20	Separator Removal Sequence
9.1-21	Fuel Bundle Transfer Sequence
9.1-22	Fuel Bundle Laydown Areas
9.1-23	Containment Building Laydown Areas
9.2-1 through 9.2-3	Deleted
9.2-4	Makeup Water Pumphouse Flowpath (simplified)
9.2-5	Makeup Condensate Storage
9.2-6	Heat Rejected to Ultimate Heat Sink for Units Brought to Cold Shutdown
9.2-7	Heat Rejection Rates for Unit 1 Under LOCA or LOOP
9.2-8	Deleted
9.2-9	Deleted
9.2-10	Natural Pond Temperatures

LIST OF FIGURES (Cont'd)

NUMBER	TITLE
9.3-1 through 9.3-6	Deleted
9.3-7	Saturation Temperature of Sodium Pentaborate Solution
9.5-1 through 9.5-6	Deleted
9.5-7	Typical Diesel Generator Lube Oil System Schematic Diagram
9.5-8	Circuit Arrangement For Detection and Suppression Systems Located in Buildings Containing Safety-Related Equipment
9.5-9	Typical Fire and Trouble Alarm Indication For Dection and Suppression Systems Located in Buildings Containing Safety-Related Equipment

CHAPTER 9 - AUXILIARY SYSTEMS

DRAWINGS CITED IN THIS CHAPTER*

* The listed drawings are included as "General References" only; i.e., refer to the drawings to obtain additional detail or to obtain background information. These drawings are not part of the USAR. They are controlled by the Controlled Documents Program.

DRAWING*	SUBJECT
112D4340	Channel Handling Boom
M01-1106	General Arrangement - Grade Floor Plan El. 737'-0"
M01-1107	General Arrangement - Mezzanine Floor Plan El. 762'-0"
M01-1108	General Arrangement - Main Floor Plan
M01-1109	General Arrangement - Miscellaneous Floor Plans
M01-1110	General Arrangement - Sections "A-A" and "B-B"
M01-1116	General Arrangement - Circulating Water Screen House
M05-1007	Condensate Polishing
M05-1012	Cycled Condensate Storage
M05-1031	Auxiliary Steam
M05-1032	Component Cooling Water
M05-1035-1 to 3	Diesel Generator Auxiliary System Starting Air Exhaust and Combustion System
M05-1035-4 to 8	Diesel Generator Cooling System
M05-1036	Diesel Generator Fuel Oil System
M05-1037	Fuel Pool Cooling and Cleanup System
M05-1039	Fire Protection
M05-1040	Instrument Air
M05-1045-1 to 11	Process Sampling System
M05-1045-12	Postaccident Sampling & Analysis System (PASS)
M05-1048	Service Air Piping and Instrumentation Diagram
M05-1052	Shutdown Service Water
M05-1056	Plant Service Water
M05-1057	Turbine Building Closed Cooling Water
M05-1060	Suppression Pool Cleanup System
M05-1077	Standby Liquid Control System
M05-1101	Auxiliary Building HVAC System
M05-1102	Control Room HVAC
M05-1103	Diesel Generator Room Ventilation System
M05-1104	Fuel Building HVAC System
M05-1106-1	Make-up Water Pump
M05-1106-2	Shutdown Service Water Ventilation
M05-1106-3	Circulating Water Screenhouse Ventilation
M05-1107	Machine Shop HVAC System
M05-1108	Off-Gas Vault Refrigeration HVAC System
M05-1109	Drywell Cooling Chilled Water System
M05-1110	Drywell Purge
M05-1111-1,2,3&5	Containment Building HVAC System
M05-1111-4	Combustible Gas Control System Equipment Room Cooling
M05-1112-10 to 12	Service Building Chilled Water System

DRAWINGS CITED IN THIS CHAPTER* (Continued)

DRAWING*	SUBJECT
M05-1113	Turbine Building HVAC System
M05-1114	Radwaste Building HVAC
M05-1115	Essential Switchgear Heat Removal System
M05-1116	ECCS Equipment Room Cooling System
M05-1117	Station Chilled Water System
M05-1118	Laboratory HVAC System
M05-1121-1	Refrigeration Piping Switchgear Heat Removal
M05-1121-2	Switchgear Heat Removal Refrigeration System
M05-1121-3	Off-Gas Vault Refrigeration Piping
M05-9035	Diesel Generator Lubrication Schematic

CHAPTER 9 - AUXILIARY SYSTEMS

9.1 FUEL STORAGE AND HANDLING

9.1.1 New Fuel Storage

9.1.1.1 Design Bases

9.1.1.1.1 Storage Design Bases

a. New fuel storage racks are provided for approximately 38% of the full core fuel load.

b. New fuel storage racks are designed and arranged so that the fuel assemblies can be handled efficiently during refueling operations.

9.1.1.1.2 Safety Design Bases - Structural

a. The new fuel storage racks, fully loaded with fuel assemblies, are designed to withstand all credible static and dynamic loadings, to prevent damage to the structure of the racks, and therefore the contained fuel, and to minimize distortion of the racks arrangement. (See Table 3.9-2(s).)

b. The modules are designed to protect the fuel assemblies from excessive physical damage under normal or abnormal conditions caused by impacting from either fuel assemblies, bundles or other equipment.

c. The racks are constructed in accordance with the Quality Assurance Requirements of 10 CFR 50, Appendix B.

d. The new fuel storage racks are categorized as Safety Class 2 and Seismic Category I.

e. The new fuel storage facility is designed in accordance with General Design Criteria 2, 3, 4, 5, 61, 62, and 63. The new fuel storage facility is also designed in accordance with Regulatory Guides 1.13, 1.29, 1.102, 1.115, and 1.117. Its design precludes any deleterious effects on new fuel rack integrity due to phenomena such as earthquakes, tornadoes, hurricanes, flood, and turbine missiles. The new fuel storage vault is a seismic Category I structure.

9.1.1.1.3 Safety Design Bases - Nuclear

The new fuel storage racks are designed and maintained with sufficient spacing between the new fuel assemblies to assure that the array, when racks are fully loaded, shall be subcritical, by at least 5% K_{eff} including allowance for calculational biases and uncertainties. In the calculations performed to assure that $K \leq 0.95$, the standard lattice methods (Reference 1) used at General Electric are employed. Under conditions where diffusion theory is valid, it is used in calculations. Monte Carlo techniques are employed to "bench mark" the diffusion theory results to assure accuracy.

It is assumed that the storage array is infinite in all directions. Since no credit is taken for leakage, the values reported as effective neutron multiplication factors are in reality infinite neutron multiplication factors.

The biases between the calculated results and experimental results as well as the uncertainty involved in the calculations are taken into account as part of the calculational procedure to assure that the specified K_{eff} limits are met.

9.1.1.2 Facilities Description

The location of the new fuel storage facility within the station complex is shown in Drawing M01-1107-1. Each new storage rack (Figure 9.1-1) holds up to 10 channeled or unchanneled assemblies in a row.

Fuel spacing (7 inches nominal center-to-center within a rack, 12.25 inches nominal center-to-center between adjacent racks) within the rack and from rack-to-rack limits the effective multiplication factor of the array (K_{eff}) to not more than 0.95. The fuel assemblies are loaded into the rack through the top. Each hole for a fuel assembly has adequate clearance for inserting or withdrawing the assembly channeled or unchanneled. Sufficient guidance is provided to preclude damage to the fuel assemblies. The upper tie plate of the fuel element rests against the rack to provide lateral support. The design of the racks prevents accidental insertion of the fuel assembly in a position not intended for the fuel. This is achieved by abutting the sides of each casting to the adjacently installed casting. In this way, the only spaces in the assembly are those into which it is intended to insert fuel. The weight of the fuel assembly is supported by the lower tie plate which is seated in a chamfered hole in the base casting.

The floor of the new fuel storage vault(s) is sloped to a drain located at the low point. This drain removes any water that may be accidentally and unknowingly introduced into the vault. The drain is part of the floor drain liquid radwaste processing and disposal system.

The new fuel storage vaults are provided with removable aluminum checkerplate covers to prevent moisture and debris from entering the vault.

Curbs around the perimeter of the vault prevent the entry of liquids.

The radiation monitoring equipment for the new fuel storage area is described in Subsections 7.7.1.9 and 12.3.4.

9.1.1.3 Safety Evaluation

9.1.1.3.1 Criticality Control

The calculations of K are based upon the geometrical arrangements of the full array and subcriticality does not depend upon the presence of neutron absorbing materials. The arrangement of fuel assemblies in the fuel storage racks results in K below 0.95 in a dry condition or completely flooded with water which has a density of 1 g/cc. To meet the requirements of General Design Criterion 62, geometrically-safe configurations of fuel stored in the new fuel array are employed to assure that K_{eff} will not exceed 0.95 if fuel is stored in the dry condition or if the abnormal condition of flooding (water with a density of 1 g/cc) occurs. In the dry condition, K is maintained ≤ 0.95 due to under-moderation. In the flooded condition, the geometry of the fuel storage array assures the K_{eff} will remain ≤ 0.95 due to over-moderation.

The condition of optimum moderation is precluded, since the aluminum checkerplate covers provided over the vault prevent the entry of mist. No limitation is placed on the size of the new fuel storage array from a criticality standpoint since all calculations are performed on an infinite basis.

9.1.1.3.2 New Fuel Rack Design

The new fuel rack design is illustrated in Figure 9.1-1.

a. The new fuel storage vault contains 24 sets of castings which may contain up to 10 fuel assemblies; therefore a maximum of 240 fuel assemblies may be stored in the new fuel vault.

b. The storage racks provide an individual storage compartment for each fuel assembly and are secured to the vault wall through associated hardware. The fuel assemblies are stored in a vertical position, with the lower tie plate engaging in a captive hole in the lower fuel rack support casting.

c. The weight of the fuel assembly is held by the lower support casting.

d. The new fuel storage racks are made from aluminum. Materials used for construction are specified in accordance with the latest issue of applicable ASTM specifications. The material choice is based on a consideration of the susceptibility of various metal combinations to electrochemical reaction. When considering the susceptibility of metals to galvanic corrosion, aluminum and stainless steel are relatively close together insofar as their coupled potential is concerned. The use of stainless steel fasteners in aluminum to avoid detrimental galvanic corrosion is a recommended practice and has been used successfully for many years by the aluminum industry.

e. The nominal center-to-center spacing for the fuel assembly between rows is 12.25 inches. The nominal center-to-center spacing for the fuel within the rows is 7.00 inches. Fuel assembly placement between rows is not possible.

f. Lead-in and lead-out guides at the top of the racks provide guidance of the fuel assembly during insertion or withdrawal.

g. The rack is designed to withstand the impact force generated by the vertical free fall of a fuel assembly from the height of 6 feet while maintaining the safety design basis. Administrative controls limit the elevation of fuel to less than 6 feet above the new fuel storage racks.

h. The storage rack is designed to withstand the pull-up force of 4000 pounds and a horizontal force of 1000 pounds. The racks are designed with lead outs to prevent sticking. However, in the event of a stuck fuel assembly, the fuel handling platform auxiliary hoist which is used to remove the fuel, is limited to a maximum lifting force of 1000 pounds.

i. The fully loaded storage rack is designed to withstand acceleration levels associated with the design basis earthquake.

j. The fuel storage rack is designed to handle non-irradiated, mildly radioactive fuel assemblies. The expected radiation levels are well below the design levels.

k. The fuel storage rack is designed using noncombustible materials. Plant procedures and inspections assure that combustible materials are restricted from this area. Fire prevention by elimination of combustible materials and fluids is regarded as the prudent approach rather than fire accommodation and the need for fire suppressant materials which could inhibit or negate criticality control assurances. Therefore, fire accommodations is not considered a problem.

l. The fuel storage racks are provided protection from adverse environmental effects by proper design of the new fuel storage facility.

9.1.1.3.3 Protective Features of New Fuel Storage Vault

The new fuel storage vault is provided with removable aluminum checkerplate covers. To prevent moisture and debris from entering the vault, the covers will normally be in place over the vault, except when new fuel is to be inserted or removed from the rack.

The new fuel storage vault is provided with embedded angle frame perimeter. This frame extends above floor level and prevents liquids from entering the vault.

9.1.2 Spent Fuel Storage

There are three types of spent fuel storage racks in use at CPS. Two types of high-density racks utilizing a neutron poison are installed in the fuel building spent fuel storage facility (spent fuel storage pool and fuel cask storage pool). Cast aluminum racks are in the upper containment fuel storage area.

The racks supplied by Holtec were analyzed with NRC approved methodology described in their design bases documentation and the specific license amendment request (RS-04-113).

9.1.2.1 Design Bases

9.1.2.1.1 Safety Design Bases

9.1.2.1.1.1 Safety Design Bases - Structural

a. The spent fuel storage racks are designed to withstand all credible static and dynamic loadings to prevent damage to the structure of the racks and the stored spent fuel and to minimize distortion of the rack arrangement.

b. The spent fuel storage racks are designed to protect the fuel assemblies from excessive physical damage which could cause the release of radioactive materials in excess of 10 CFR 20 and 10 CFR 50.67limits.

c. The spent fuel storage racks are categorized as Seismic Category I.

d. The spent fuel storage racks are constructed in accordance with the quality assurance requirements of 10 CFR 50, Appendix B.

e. The spent fuel storage facility is also designed in accordance with General Design Criteria 2, 3, 4, 5, 61, 62, and 63. The spent fuel storage facility is also designed in accordance with Regulatory Guides 1.13, 1.29, 1.102, 1.115, and 1.117. Its design precludes any deleterious effects on spent fuel rack integrity

due to phenomena such as earthquakes, tornadoes, hurricanes, floods, and turbine missiles.

9.1.2.1.1.2 Safety Design Bases - Nuclear

The fuel array in the fully loaded spent fuel racks is designed so that $K_{eff} \leq 0.95$.

9.1.2.1.2 Power Generation Design Bases

Storage space for spent fuel is provided in the fuel building spent fuel and cask storage pools and in the upper containment fuel storage pool. The fuel building spent fuel storage pool contains sufficient storage space for approximately 400% of one full core fuel load. The fuel building cask storage pool contains sufficient storage space for approximately 50% of one full core fuel load. The upper containment fuel storage pool, which will be used for storage of spent fuel only during refueling operations, contains sufficient storage space for approximately 25% of one full core fuel load.

9.1.2.2 Facilities Description

The spent fuel storage racks provide a place in the respective fuel pools for storing spent fuel assemblies. Use of proper geometry, and in the case of the fuel building storage pools, a neutron poison precludes the possibility of criticality in the storage racks under normal and abnormal conditions. The location of the spent fuel storage facilities within the station complex is shown in Drawings M01-1106-1 and M01-1109-1.

9.1.2.2.1 Fuel Building Spent Fuel Storage Pool and Fuel Cask Storage Pool

9.1.2.2.1.1 Spent Fuel Storage Array

The spent fuel storage pool array is composed of individual freestanding racks. The racks are positioned within the pool to provide rack-to-rack and rack-to-wall spacing sufficient to preclude impact/collision during a seismic event. The spent fuel storage pool contains 22 racks and is shown in Figure 9.1-2a.

The fuel cask storage pool configuration contains 2 racks. The configuration is shown in Figure 9.1-2c. Impacts are expected between racks which are initially in contact at the base plates. Impacts also occur between adjacent racks at the top of the rack, however, these impacts occur above the top of active fuel and therefore do not represent a risk to fuel integrity. Evaluation of rack impacts demonstrates that there is no permanent deformation of rack material. Fuel configuration and poison areas remain unaffected. Therefore, these rack impacts are acceptable.

9.1.2.2.1.2 Rack Construction

Each rack is composed of square storage cells which are cornerconnected in a checker-board fashion. Spent fuel assemblies are placed either in the storage cell themselves or in the spaces formed by the outside surfaces of four adjacent cells. The support feet of the racks contain remotely adjustable jackscrews to achieve required levelness.

9.1.2.2.1.3 Storage Cell Construction

The storage cell walls are composed of three layers. The inner and outer layers are stainless steel. The middle layer is BORAL or METAMIC. Both are a neutron poison material which is a physical mixture of boron carbide and particulate aluminum. The BORAL or METAMIC is employed to prevent criticality. In all structural integrity and stress calculations, only the layers of stainless steel were considered.

9.1.2.2.1.4 Spacing

Fuel assemblies are stored at a nominal 6.4375-inch or 6.243-inch, center-to-center spacing in a rectangular-pitch array, depending on the rack type.

9.1.2.2.1.5 Capacity

The spent fuel pool contains 22 racks to store a maximum of 2,512 fuel assemblies plus 10 failed fuel canisters. The fuel cask storage pool contains 2 racks to store a maximum of 360 fuel assemblies.

9.1.2.2.1.6 Fuel Containment

The fuel assemblies are stored in a vertical position. The rack arrangement is designed to prevent accidental insertion of fuel bundles between adjacent racks.

9.1.2.2.2 Upper Containment Fuel Storage Pool

9.1.2.2.2.1 Rack Construction

The racks are bolted and clamped to the rack support structure. All racks are built with a common mounting dimension to facilitate rack rearrangement or replacement and are secured to the pool wall with associated hardware.

9.1.2.2.2.2 Spacing

The rack holddown bolt spacing is maintained large enough to prevent criticality from the geometry considerations alone. The racks are designed to maintain a nominal fuel storage cell spacing of 7 inches (center-to-center) within a rack and 12.25 inches (center-to-center) from rack to rack.

9.1.2.2.2.3 Capacity

Each standard spent fuel rack (shown in Figure 9.1-2b) stores 10 fuel assemblies. A minimum of 16 fuel storage racks will be utilized, which will facilitate storage of 160 fuel assemblies (approximately 25% one full core fuel load). Additional fuel storage racks may be utilized if determined to be beneficial for refueling expediency. Additional storage racks are available for storage of control rods, control rod guide tubes, defective fuel storage canisters, and fuel channels. These special castings prevent fuel from exceeding K of 0.95 in the event that fuel is inserted in these positions.

9.1.2.2 2.4 Fuel Containment

The storage racks provide an individual storage location for each fuel assembly. Each fuel assembly is stored in a vertical position with the lower tie plate engaged on a captive slot in the lower fuel rack support casting. The weight of the fuel assembly is held by the lower rack support casting.

The rack arrangement is designed to prevent accidental insertion of fuel bundles between adjacent racks. The storage rack structure is so designed that the upper tie plate casting cannot be lowered below the top of the upper rack. This prevents any tendency of the fuel bundle jamming on insertion or removal from the rack. Lead-in and lead-out guides at the top of the racks provide guidance of the fuel assembly during insertion or withdrawal.

9.1.2.3 Safety Evaluation

9.1.2.3.1 Criticality Control

The design of the spent fuel storage racks provides for a subcritical multiplication factor K_{eff} of ≤ 0.95 for normal and abnormal storage conditions. Normal conditions exist when the fuel storage racks are covered with approximately 25 feet of water above the stored fuel and contain any possible number of fuel bundles. An abnormal condition may result from the accidental drop of a fuel assembly onto a loaded fuel rack or the placement of a fuel assembly adjacent to, or lying horizontally across the top of a loaded rack.

The spent fuel rack design also provided for the dry storage of new fuel for the first core loading. The effective multiplication factor for the new fuel storage was designed not to exceed 0.98, including the optimum moderation condition.

9.1.2.3.1.1 Design Analyses for Spent Fuel Pool

To ensure that the design criteria are met, the following conditions were analyzed for the spent fuel pool storage racks:

a. Normal positioning in the spent fuel storage array.

b. Eccentric positioning in the spent fuel storage array (Figure 9.1-3a).

c. Storage cell wall thickness variation.

d. Storage cell inside diameter variation.

e. Fuel enrichment variation.

f. Poison concentration variation.

g. A fuel assembly positioned adjacent to a loaded fuel rack.

h. A fuel assembly lying horizontally across the top of loaded fuel racks.

i. Rack loaded with compacted fuel to represent a dropped fuel assembly.

j. Pool water temperatures varied from 40° to 260° F.

9.1.2.3.1.2 Design Analyses for Upper Containment Fuel Pool

To ensure that the design criteria are met, the following spent fuel storage conditions were analyzed for the upper containment fuel pool:

a. Normal positioning in the spent fuel storage array.

b. Eccentric positioning in the spent fuel storage array (Figure 9.1-3a).

c. Fuel stored in control rod racks (Figure 9.1-3b).

d. Pool water temperature increases to 212° F.

e. Two bundles placed side by side while separated from the storage racks area by 12 inches of water (Figure 9.1-3c).

f. Three-bundle tee array separated from the storage rack area by 12 inches of water (Figure 9.1-3c).

g. Three-bundle linear array separated from the storage rack area by 12 inches of water (Figure 9.1-3c).

h. Normal storage array of ruptured fuel.

i. Abnormal condition of pool being drained and ruptured fuel containers being flooded.

j. Moving fuel bundle in aisle between storage racks.

k. Grapple drop displacing two fuel bundles (Figure 9.1-3c).

l. Four-bundle square array separated from the storage rack area by 12 inches of water (Figure 9.1-3c).

m. Moving fuel bundle between work platform and storage area.

The spent fuel storage racks in the upper containment fuel pool maintain $K_{eff} \leq 0.95$ under these conditions.

9.1.2.3.1.3 Analytical Methods

Standard lattice methods and Monte Carlo techniques were employed in the calculations performed to assure that the design criteria are met. For the fuel building spent fuel storage facility, it was assumed that the storage array is infinite in all directions. Since no credit was taken for leakage, the reported effective neutron multiplication factors are in reality infinite multiplication factors. The biases between the calculated results and the experimental results, as well as the uncertainty involved in the calculations, were taken into account as part of the calculational procedure to assure that the specified K_{eff}. limits were met. The models employed have been verified via a series of benchmarking analyses of critical experiments conducted with typical LWR fuel lattices, with and without various poison absorbers.

9.1.2.3.1.4 Use of Poison in the Fuel Building Spent Fuel Storage Pool Racks

A neutron absorbing poison material, BORAL or METAMIC, aids in maintaining a subcritical configuration. See Subsection 9.1.2.2.1.3 for further description.

9.1.2.3.2 Control of Other Hazards

9.1.2.3.2.1 Radiation

The fuel storage racks are composed of all metal components and as such will not be adversely affected by exposure to radiation from the stored fuel. Adequate water shielding had been provided for both storing and transporting fuel in the spent fuel pool. Liquid level sensors are

installed to detect and alarm on a low pool water level, and adequate makeup water is available to assure that the water level is maintained above the stored fuel for shielding and heat removal.

9.1.2.3.2.2 Corrosion

The racks in the spent fuel pool are made of stainless steel to minimize corrosion. The racks in the upper containment fuel pool are made from aluminum. Materials used for construction are specified in accordance with the latest issue of applicable ASTM specifications. The material choice is based on a consideration of the susceptibility of various metal combinations to electrochemical reaction. When considering the susceptibility of metals to galvanic corrosion, aluminum and stainless steel are relatively close together insofar as their coupled potential is concerned. The use of stainless steel fasteners in aluminum to avoid detrimental galvanic corrosion is recommended practice and has been used successfully for many years by the aluminum industry.

9.1.2.3.2.3 Earthquakes

There are no connections of the fuel building spent fuel storage racks in the spent fuel storage pool walls or floor; therefore the potential for movement exists. The fuel racks have been analyzed using a nonlinear time-history method which accounts for the hydrodynamic possibilities of sliding and tipping. The analyses conclude that the maximum relative sliding and/or tipping displacement along the floor is well within the clearance between fuel racks and the pool walls and appurtenances and that the racks will not tip over. The analyses also show that the resulting stresses are within the allowable limits given in ASME Section III, Subsection NF.

The storage racks in the containment upper fuel pool are designed to withstand a single horizontal force of 1000 pounds and horizontal combined loads of up to 222,000 pounds well in excess of expected loads.

9.1.2.3.2.4 Impact Forces

The storage racks in both pools are designed to withstand the impact force generated by the vertical free fall of a fuel assembly from the height of 6 feet while maintaining the safety design basis.

9.1.2.3.2.5 Pull-Up Forces

The storage racks in the containment upper fuel pool are designed to withstand a pull-up force of 4000 pounds. There are no readily available forces in excess of 1000 pounds. The racks are designed with lead outs to prevent sticking.

The storage racks in the fuel building spent fuel storage pool are designed to withstand a pull-up force of 1200 pounds. There are no readily available forces in excess of 1100 pounds. The racks are designed to permit smooth withdrawal.

9.1.2.3.2.6 Tornadoes

The capability of the fuel storage facilities to prevent missiles generated by high winds from contacting the fuel is discussed in Subsection 3.5.2.

9.1.2.3.2.7 Fire

Since the fuel racks are made of noncombustible material and are stored under water, there is no potential fire hazard.

9.1.2.3.2.8 Pipe Breaks

The large water volume in the fuel storage pools protects the racks from potential pipe breaks and associated jet impingement loads.

From the foregoing analyses, it is concluded that the spent fuel storage arrangement meets its safety design bases.

9.1.2.4 Testing and Inspection

The spent fuel storage racks are passive components and require no testing during normal plant operations for nuclear safety purposes.

9.1.2.5 Summary of Radiological Considerations

The safety design bases of the spent fuel storage arrangement are satisfied. Thus, the exposure of plant personnel to radiation is maintained well below published guideline values. Further details of radiological considerations for the spent fuel storage arrangement are presented in Chapter 12.

9.1.3 Spent Fuel Pool Cooling and Cleanup System

9.1.3.1 Design Bases

The spent fuel pool cooling and cleanup system is combined with the upper containment pool cooling and cleanup system to form one integrated fuel pool cooling and cleanup (FPC&C) system.

9.1.3.1.1 Safety Design Bases

The integrated fuel pool cooling and cleanup system is designed to remove the decay heat from the fuel assemblies and maintain pool water level. It is also designed to remove radioactive contaminants from the pool water in order to minimize the radiation levels in the vicinity of the pool and the release of radioisotopes from pool water into the air. FPC&C piping and valves which form a part of the containment boundary are classified as Safety Class 2. The remainder of the FPC&C system is classified Safety Class 3, with the exception of the filter-demineralizer trains, makeup from condensate storage tank, and pump motors, all of which are nonessential to safety. Portions of the system are designed as Seismic Category 1 as discussed in Section 3.2.

9.1.3.1.2 Power Generation Design Bases

The fuel pool cooling and cleanup system is designed to:

a. Minimize corrosion product buildup and control water clarity in the upper containment fuel pools and fuel building fuel pools so that the fuel assemblies can be efficiently handled under water.

b. Minimize radioactive fission product concentration in the water, in order to minimize their release from the pool surface to the fuel and containment building environment.

c. Monitor fuel storage pool water level and maintain the level sufficiently above the spent fuel to provide adequate shielding for normal building occupancy.

d. Monitor containment pool water level and maintain a shielding water level above the reactor vessel head sufficient to hold the radiation level below acceptable limits.

e. Maintain upper containment and fuel building pool water temperatures at or below 120° F under normal (non-refuel outage) operating conditions while removing the decay and drywell convective heat.

f. The normal cooling water medium for the FPC&C heat exchangers is the component cooling (CC) system. The system has the capability to remove design basis heat loads (see subsection 9.1.3.3) with approximately 4150 gpm of component cooling water (CC) to be delivered to the shell side while the FPC&C systems circulate approximately 4150 gpm through the tube side of the FPC&C heat exchanger.

g. Each FPC&C train has the capability to employ the shutdown service water (SX) system as a cooling medium in place of the component cooling water (CC) system. Due to the lower design water inlet temperature (95°F for SX versus 105°F for CC), the FPC&C heat removal capability may be increased by using SX cooling water under abnormal conditions.

h. The heat load to the containment upper pool due to heat conduction and convection from the reactor and through the drywell head is estimated to be 0.3 x 10^6 Btu/hr.

i. The required cooling water and pool circulation flows may be reduced for safety-related loading conditions. During these conditions, the pool temperatures may be allowed to rise to 150°F. The filter demineralizers would no longer be used since the anion resins used in the demineralization process become ineffective when subjected to temperatures above 150°F.

j. Maximum heat loads, transferred to the pools, occur during a refuel. Refueling is typically done in the late fall, winter or early spring. During these times of the year lake temperatures are low. Heat sink temperatures for SX and CC are typically less than 60°F and 80°F, respectively. These lower heat sink temperatures greatly increase the heat removal capabilities of the FC system. Under these conditions, with the vessel disassembled and the reactor pool flooded up greater than 22 feet, 8 inches, the FC system alone can remove the core residual heat and maintain pool temperatures within limits. Natural circulation within the RPV will distribute core heat throughout the Upper Pool. Administrative control will assure proper use of FC for core heat removal.

9.1.3.2 System Description

The integrated fuel pool cooling and cleanup system maintains the upper containment pool, the spent fuel storage pool, and the cask storage pool and the fuel transfer pools below a specified temperature, below a specified radioactivity concentration level, and at a degree of clarity necessary to transfer and service the reactor internals and fuel bundles.

Two 100% capacity system trains are employed for Fuel Pool Cleanup. One train supplies the design basis cooling capacity with cleanup at a rate of 1000 gpm. The other train acts as a backup system and is employed when servicing of the first train is required, i.e., during backwashing, maintenance, etc. Both trains can be run in parallel when a larger than normal heat load is produced in the pool, e.g., from a nonequilibrium discharge batch.

The primary components in each train are the heat exchanger, filter-demineralizer unit, pump, and the associated piping and valves. A piping and instrumentation diagram of the system is provided in Drawing M05-1037. The majority of the equipment is located in the fuel building. The valves, piping, and instrumentation associated with the containment pool are located in the containment building. The valves, piping, instrumentation, and equipment associated with the filter demineralizers are located in the radwaste building.

The FPC&C system cools all of the pools by transferring the decay heat released from the stored spent fuel through heat exchanger to the CC system. Each train contains a heat exchanger with the capability to remove design basis heat loads (see subsection 9.1.3.3) provided design flow of 4150 gpm CC water is delivered to the shell side of the heat exchanger while 4150 gpm of water from the pools is circulated through the tube side. With spent fuel in the cask storage pool, the gates between the spent fuel pool and cask storage pool must be open.

Relaxed cooling water delivery rates and pool circulation rates will result in lower heat dissipation capabilities. If the normal (non-refuel outage) operating temperature of 120°F is to be maintained when lower cooling water delivery and/or pool circulation rates are being used, both FPC&C heat exchangers using CC as a cooling water medium or one heat exchanger with SX cooling supply may be required. The shutdown service water (SX) system may also be used to replace the component cooling water (CC) system when the latter is not available.

The residual heat removal (RH) system may also be connected to the FPC&C system to remove decay heat under the following conditions:

a. when the reactor is in a cold shutdown condition or is in the refueling mode and

b. when an abnormal heat load has been produced in the pools and it appears that the pool water temperature will exceed 150°F.

Clarity and purity of the pool water are maintained by a combination of filtering and ion exchange. Each filter-demineralizer subsystem has adequate capacity to maintain the desired purity level of the pools under normal operating conditions. The normal filter-demineralizer flow rate of at least 750 gpm, less than one-quarter of the total possible system flow, and results in cycling the fuel pool water volume at least twice in 24 hours. The filter-demineralizers do not process pool water if the water temperature is 140°F or above because, anion resins become ineffective when subjected to temperature above 150°F. The FPCC system is designed to remove suspended or dissolved impurities from the following sources:

a. dust or other airborne particles,

b. surface dirt dislodged from equipment immersed in the pool,

c. crud and fission products emanating from the reactor during refueling,

d. debris from inspection or disposal operations, and

e. residual cleaning chemicals or flush water.

The filter-demineralizer vessel is constructed of phenolic resin-coated carbon steel. A post strainer in the effluent stream of the filter-demineralizer limits the migration of filter material. The filter holding element can withstand a differential pressure greater than the developed pump head for the system.

Grab samples are provided at the inlet header for each filter demineralizer and at the effluent of each of the two filter demineralizer vessels.

Sample frequencies, chemistry parameters, and parameter limits are specified in plant procedures.

An in-line conductivity cell is provided for the inlet header to monitor and record fuel pool conductivity. The filter demineralizers will be operated to maintain fuel pool water quality within the limits given above. The ability to monitor radiochemistry exists.

In-line conductivity cells are provided for the effluent from each * vessel to monitor and record the effluent conductivity.

Differential pressure as measured across each individual filter demineralizer is monitored and recorded. The system is designed to operate with a differential pressure up to a 25-psid increase over a fresh vessel and maintain full flow and effluent water quality. The vessel will be removed from service when it shows a 25-psid differential pressure. (Q&R 281.1)

The filter-demineralizer units are located in the radwaste building in shielded cubicles which are large enough to permit removing filter elements from the vessels. Each cubicle houses only a filter-demineralizer and the associated piping. All valves (inlet, outlet, recycle, vent, drain, etc.) are located on the outside of the cubicle together with necessary piping and headers, instrument elements and controls. Penetrations through shielding walls are located so as to conform to radiation shielding requirements.

* Conductivity cell, 2CE-FCD11 for effluent from 2FC01DB has been removed from service per EC 330599.

The filter-demineralizers are controlled from a local panel. Differential pressure and conductivity instrumentation is provided for each filter-demineralizer unit to indicate when backwash is required. Suitable alarms for parameters such as differential pressure and flow are used to monitor the condition of the filter-demineralizers.

FPC&C system instrumentation is provided for both automatic and remote-manual operations. In order to protect the pumps, a pressure switch stops the FPC&C pumps when the fuel pool skimmer surge tank level is too low. Level switches are also located in both upper containment and spent fuel storage pools. Whenever the water level is too low, an alarm in the control room

is activated. Temperature elements are provided and pool cooling and cleanup system instrumentation and controls are described in Subsection 7.6.1.9.

The FPC&C pumps are controlled from the main control room. Low pump suction pressure automatically turns off the pumps. A low pump discharge pressure alarm is indicated in the control room. These pumps receive power from a Class 1E electrical system.

The water in the spent fuel storage pool and cask storage pool is maintained at a level which is sufficient to provide shielding for normal building occupancy. Radioactive particulates and solubles are removed from the fuel pool by the filter-demineralizer units which are located in shielded cubicles. For these reasons, the exposure of station personnel to radiation from the spent fuel pool cooling and cleanup system is as low as is reasonably achievable (ALARA). Details of radiological considerations for this system are described in Chapter 12.

Fuel storage pool and cask storage pool water is circulated by means of overflow through skimmers and scuppers around the periphery of the pool. This overflow is collected in the fuel pool skimmer surge tanks, and the pool water is pumped through the filter-demineralizer and heat exchanger and back to the pool through diffusers. The containment pool water is collected by skimmers and scuppers and flows either into the spent fuel pool or is sent directly to the surge tanks. From there a closed loop circulation is attained through the same pump, heat exchanger and filter-demineralizer train.

The circulation patterns within the containment pool and spent fuel storage pool and cask storage pool are established by locating the diffusers and skimmers so particles dislodged during refueling operations are swept away from the work area and out of the pools.

In the event of pipe rupture, siphon breakers prevent the return lines to the pools from siphoning the pool below and acceptable water level.

Heat released from the pools is handled by the building ventilation system. Makeup water from the cycle condensate system is provided the system through a remotely operated valve.

Suppression pool cleanup is accomplished through one of the standby fuel pool filter-demineralizers. For further details, refer to Subsection 9.3.6.

9.1.3.3 Safety Evaluation

The spent fuel pooi cooling portion of this system is designed to remove decay heat from the spent fuel assemblies in the spent fuel pool and cask storage pool and maintain the pool level and pool temperature to prevent damage to fuel elements:

a) to maintain the spent fuel pool and cask storage pool temperature at or below 140°F under a maximum normal heat load (MNHL) condition defined below.

b) to maintain the spent fuel pool and cask storage pool temperature at or below 150°F under a maximum abnormal heat load (MAHL) condition defined below. However, the plant has an emergency makeup system that is capable to supply makeup water for evaporation and potential boil-off during potential higher spent pool temperature conditions.

9.1.3.3.1 Decay Heat Load Cases

The Fuel Pool Cooling and Cleanup System (FPCCS) has the cooling capability to accommodate the following two decay heat load cases from the spent fuel stored in the pool. The pool consists of 2872 fuel storage cells of which 2512 cells are in the spent fuel pool and 360 cells are in the cask storage pool.

a. Case I Maximum Normal Heat Load (MNHL) - This normal batch discharge case conservatively assumes more fuel cells are occupied than available. The MNHL case assumes that the spent fuel pool and cask storage pool has a combined total of 4159 cells to store spent fuel bundles and 4056 cells have already been filled with spent fuel bundles from 13 previous 18 month long operating cycles. The normal batch discharge of 312 bundles with an average exposure of 43.0 GWd/MT is initiated 24 hours after reactor shutdown from a 24 month long operating cycle. So the spent fuel storage is conservatively overfilled after this batch discharge. The MNHL is calculated to be 27.7 million Btu/hr.

b. Case 2 Maximum Abnormal Heat Load (MAHL) - This full-core discharge case is an extension from the MNHL case after 24 months of full power operation from the last outage. This case assumes that a full-core discharge of 624 fuel bundles with an average exposure of 43.0 GWd/MT is initiated 24 hours after shutdown. The previous batch of 312 fuel bundles discharged in the spent fuel storage pool mentioned in Case 1 has just decayed for 24 months. So the spent fuel storage is conservatively overfilled after this full-core discharge. The MAHL is calculated to be 40.0 million Btu/hr.

The above decay heat load calculations of 27.7 million Btu/hr for MNHL case and 40.0 million Btu/hr for MAHL case are based on the following assumptions:

i Full power operation at 3543 MWt.

ii Fuel Bundle average enrichment of 3.53% with GE14 fuel.

iii Operating Cycle of 24 months.

iv ORNL ORIGEN 2 Code.

v. For both cases, fuel bundle transfer rate is 7 fuel bundles per hour for the first 160 bundles followed by a rate of 4 bundles per hour.

9.1.3.3.2 Acceptance Criteria

The following acceptance criteria in terms of peak spent fuel pool bulk temperature for the heat load cases is consistent with the intent of those guidelines given in Section III.1.d of the NRC's SRP 9.1.3 'Spent Fuel Pool Cooling and Cleanup System' dated July 1981:

o The spent fuel pool and cask storage pool bulk temperature shall remain at or below 140°F for Case 1 with one of the two trains (1 pump and one heat exchanger operating) of the Fuel Pool Cooling and Cleanup System (FPCCS) assumed to be in operation. The other train (one pump and one heat exchanger) is assumed to be the single active failure.

- The spent fuel pool and cask storage pool bulk temperature shall be kept at or below 150°F for Case 2 with both trains of the Fuel Pool Cooling and Cleanup System (FPCCS) available for operation. (However, the following analysis assumes only one train in operation.)

9.1.3.3.3 Peak Spent Fuel Pool Temperature Analysis Results & Conclusion

Given the two load cases, peak bulk spent fuel pool temperatures are calculated along with the peak evaporation rates. Additional peak bulk pool temperature analyses are also included assuming all fuel pool cooling capability is suddenly lost when the spent fuel pool temperature is at its peak. Evaporation rates and boil-off rates are computed after the complete loss of cooling as the spent fuel pool temperature rises and reaches the boiling temperature. All spent fuel pool temperature analyses assume that the initial fuel pool temperature is at an equilibrium temperature (heat removal by the FPCCS is equal to decay heat produced from previous discharges). For both cases, the FPCCS heat exchangers are assumed to be cooled by one of two trains of the Component Cooling Water (CCW) System at 105°F. The results are:

- Case 1 - The result of this analysis shows that the peak spent fuel pool and cask storage pool bulk temperature will peak at 125.8°F if the batch discharge of 312 bundles is initiated 24 hours after reactor shutdown with one train of FPCCS in operation. The highest evaporation heat loss rate reaches 0.4 million Btu/hr. Additionally for Case 1, it is arbitrarily assumed that all pool cooling is lost when spent fuel pool temperature is at its peak. It would take 5.3 hours for the pool temperature to reach boiling, and the peak boil-off rate at about 60 gpm, which is less than the Seismic Category I spent fuel pool emergency water makeup system capability of 100 gpm.

- Case 2 - The result of this analysis shows that the spent fuel pool and cask storage pool bulk temperature reaches a maximum of 134.9°F with only one train of FPCCS operating (both trains available) if a full core discharge 624 bundles (after 24 months of full power operation) is initiated 24 hours after reactor shutdown. The worst evaporation heat loss rate is about 0.6 million Btu/hr. Additionally for Case 2, it is also arbitrarily assumed that all pool cooling is lost when spent fuel pool temperature is at it peak. The pool temperature rises to boiling in 3.2 hours. The peak boil-off rate is about 86 gpm, which is less than the Seismic Category I spent fuel pool emergency water makeup system capability of 100 gpm.

Thus it can be concluded that the Fuel Pool Cooling and Cleanup System meets the Design Basis and the acceptance criteria for the two heat load cases (MNHL and MAHL). Moreover, the Fuel Pool Cooling and Cleanup System design of this plant meets the intent of the guidelines given in NRC's SRP 9.1.3 'Spent Fuel Pool Cooling and Cleanup System' dated July 1981.

The reactor will not be started up should either the fuel pool water temperature be above 150°F or whenever portions of the RHR system are needed to cool the fuel pool. It should be noted that this is extremely unlikely since the heat sink temperatures (SX/CC) will be low during periods of high heat load as discussed in Section 9.1.3.1.2 j. The connecting piping from the fuel storage pool to the RHR system is designed Seismic Category I. The RHR system is normally isolated from the FPC&C system by a locked, manually-operated gate valve. The valve is opened to connect the two systems only under the above stated abnormal conditions. The volume of the water in the fuel storage pool is such that there is enough heat absorption capability to allow sufficient time for switching over to the RHR system for emergency cooling.

The 150°F temperature limit is set to assure that the auxiliary building environment does not exceed equipment environmental limits.

The spent fuel storage pool is designed so that no single failure of structures or equipment will cause inability:

a. to maintain irradiated fuel submerged in water;

b. to reestablish normal fuel pool water level; or

c. to remove fuel safely from the station.

In order to limit the possibility of pool leakage around pool penetrations, the pools are lined with stainless steel. In addition to providing a high degree of integrity, the lining is designed to withstand abuse that might occur when equipment is moved about. No inlets, outlets, or drains are provided that might permit the pool to be drained below a safe shielding level. Lines extending below this level are equipped with siphon breakers, check valves, or other suitable devices to prevent inadvertent pool drainage. Interconnected drainage paths are provided behind the liner welds. These paths are designed to:

a. prevent the uncontrolled loss of contaminated pool water to other relatively cleaner locations within the containment or fuel building;

b. prevent pressure buildup behind the liner plate; and

c. provide liner leak detection and measurement.

These drainage paths are formed by welding channels behind the liner weld joints and are designed to permit free gravity drainage to leak detection and radwaste systems.

Normally, one train of FPC&C is in operation, however, during short periods of time for maintenance, both trains could be removed from service. During the period of time when both trains are out of service, the outage duration (including restoration) will not exceed the length of time for the spent fuel pool water temperature to reach 120°F.

A makeup water system and pool water level instrumentation are provided to replace evaporative and leakage losses. Makeup water during normal operation is supplied from the cycled condensate system. Redundant loops of the shutdown service water system (which are both Seismic Category I) can also be used as an emergency source of makeup water to the spent fuel storage pool in case of failure of the normal makeup water system. The makeup flow rate from the normal makeup system is 230 gpm while the makeup flow rate from the shutdown service water system is 100 gpm.

The cooling portion of the fuel pool cooling and cleanup system is designed to Seismic Category I up to and including the isolation valves for the filter-demineralizer. Also, a Seismic Category I bypass is provided around the filter-demineralizer. This assures continued performance of the heat removal function if the filter-demineralizer portion is damaged by a seismic event. The occurrence of a LOCA signal will isolate the essential (Seismic Category I) components from the remainder of the FPC&C system. Shutdown service water is available to provide a source of cooling water to the FPC&C heat exchangers to transfer decay heat to the ultimate heat sink.

From the foregoing analysis, it is concluded that the fuel pool cooling and cleanup system meets its design bases and satisfies the requirements of Regulatory Guide 1.13.

9.1.3.4 Inspection and Testing Requirements

No special tests are required because at least one pump, one heat exchanger, and one filter-demineralizer are normally in operation while fuel is stored in a pool. The spare unit is operated periodically to handle abnormal heat loads or to replace the operating unit during servicing, or to be used for suppression pool cleanup. Routine visual inspection of the system components, instrumentation, and trouble alarms are adequate to verify system operability.

9.1.3.5 Radiological Considerations

The following design features have been incorporated into the FPC&C system design to reduce personnel exposure to radiation:

a. Radioactive particulates and solubles are removed from the fuel pool by the filter-demineralizers which are located in individual shielded cubicles.

b. The filter-demineralizers are located upstream of the heat exchangers in order to reduce crud buildup in the heat exchanger tubes.

c. Heat exchanger tubes are made of stainless steel to minimize corrosion and crud.

d. Heat exchangers and pumps are located in separate shielded cubicles and the piping is shielded to the extent practicable.

e. The water in the spent fuel storage pool is maintained at a level which is sufficient to provide shielding for normal building occupancy.

The incorporation of the above design features should ensure that the exposure of station personnel to radiation from the spent fuel pool cooling and cleanup system will be as low as is reasonably achievable. Further details of radiological considerations for this and other systems are described in Chapters 11, 12, and 15.

9.1.4 Fuel Handling System

9.1.4.1 Design Bases

The fuel-handling system is designed to provide a safe and effective means for transporting and handling fuel from the time it reaches the plant until it leaves the plant after post irradiation cooling. Safe handling of fuel includes design considerations for maintaining occupational radiation exposures as low as reasonably achievable during transportation and handling. Fuel Handling System tools and serving equipment are listed in Table 9.1-1.

Design criteria for major fuel handling system equipment is provided in Tables 9.1-2 through 9.1-5 which list the safety class, quality group, and seismic category. Where applicable, the appropriate ASME, ANSI, Industrial and Electrical Codes are identified. Additional design criteria is shown below and expanded further in Subsection 9.1.4.2.

The transfer of new fuel assemblies between the uncrating area and the new fuel inspection stand and/or the new fuel storage vault is accomplished using a 10-ton hoist on 125-ton crane which is Seismic Category I equipped with an approved tool for handling new fuel. (Note: The fuel building crane auxiliary (10 ton) hoist has been derated to a single failure proof capacity equivalent of 3.27 tons to comply with NUREG 0612. Loading of this hoist beyond its single failure proof load capacity requires an engineering evaluation using the guidance of NUREG 0612 before performance of the lift. If an unreviewed safety question is identified when the activity is planned, appropriate actions pursuant to regulations will be taken. These actions are controlled in accordance with plant procedures.)

The 1000-pound auxiliary hoist on the fuel handling platform is used with an auxiliary fuel grapple to transfer new fuel from the new fuel vault to the fuel storage pool. From this point on, the fuel will either be handled by the telescoping grapples on the fuel handling platform or on the refueling platform, and will be transported between the reactor and fuel buildings by the fuel transfer system.

The fuel handling platform may also transfer fuel from the new fuel vault directly to the fuel transfer system.

These platforms are Safety Class 2 and Seismic Class 1 from a structural standpoint in accordance with 10 CFR 50, Appendix A and B. The combined stresses due to seismic load do not exceed 150% of the AISC Code allowable stresses. A dynamic analysis is performed on the structures using the response spectrum method with load contributions resulting from each of three earthquakes being combined by the RMS procedure. Working loads of the platform structures are in accordance with the AISC Manual of Steel Construction. All parts of the hoist systems are designed to have a safety factor of five based on the ultimate strength of the material. A redundant load path is incorporated in the fuel hoists so that no single component 1 failure could result in a fuel bundle drop. Maximum deflection limitations are imposed on the main structures to maintain relative stiffness of the platform. Welding of the platforms is in accordance with AWS D14-1 or ASME Boiler and Pressure Vessel Code Section IX. Gears and bearings meet AGMA Gear Classification Manual and ANSI B3.5. Materials used in construction of load bearing members are to ASTM specifications. For personnel safety, OSHA Part 1910-179 is applied. Electrical equipment and controls meet ANSI CI, National Electric Code, and NEMA Publication No. IC1, MG1.

The auxiliary fuel grapple and the main telescoping fuel grapples have redundant lifting features and an indicator which confirms positive grapple engagement.

The fuel grapple is used for lifting and transporting fuel bundles. It is designed as a telescoping grapple that can extend to the proper work level and in its normal fully retracted state still maintains adequate water shielding over fuel.

In addition to redundant electrical interlocks to preclude the possibility of raising radioactive material out of the water, the cables on the auxiliary hoists incorporate an adjustable, removal stop that will jam the hoist cable against some part of the platform structure to prevent hoisting when the free end of the cable is at a preset distance below water level.

A radiation monitor is also provided on the fuel handling platform, which alarms and stops the upward movement of fuel upon detecting a preset high radiation level (see Subsection 12.3.4).

Provision of a separate cask loading (cask storage) pool, capable of being isolated from the spent fuel storage pool eliminates the potential accident of dropping the cask and rupturing the fuel storage pool. Refer to Subsection 15.7.5 for accident considerations.

9.1.4.2 System Description

Table 9.1-1 is a listing of typical tools and servicing equipment supplied with the nuclear system. The following paragraphs describe the use of some of the major tools and servicing equipment and address safety aspects of the design where applicable.

9.1.4.2.1 Spent Fuel Cask

The spent fuel cask is used to transfer spent reactor fuel assemblies from the fuel building spent fuel pool via the cask pool to an offsite fuel reprocessing or storage facility.

The designs of cask storage and handling facilities are based on a cask weighing approximately 100 tons with approximate dimensions 17 feet in length by 7 feet in diameter. This fuel cask accommodates 18 fuel bundles. A flatbed railroad car or truck will take the cask to and from the fuel building and will be equipped with a cask cooling system and storage area for the cask yoke. Overland offsite transportation of the cask will conform to transportation rules and regulations, 49 CFR 173.

The fuel cask to be selected for use at CPS will be designed to accommodate the normal and accident conditions described in 10 CFR 71.

If the cask is accidentally released from the crane at its position of maximum height, it will fall into the cask storage pool, or into the cask washdown area, or onto the railroad tracks near the shipping car. In the first case, the cask will fall 12.4 feet through air and 30.5 feet through water, whereas in the other cases it will drop 19.9 feet and 17.9 feet respectively through air. In all of the above cases the accident conditions to which the cast is subject do not exceed the hypothetical accident conditions described in Appendix B to 10 CFR 71 and, therefore cask failure is not expected.

In the event that normal cooling is lost, backup cooling is provided.

If no emergency cooling is supplied, the worst result is overheating (< 1500° F) and perforation of some of the fuel pins. This would release the fission gas in the fuel pin plena to the interior of the cask.

9.1.4.2.2 Overhead Bridge Cranes

9.1.4.2.2.1 Containment Polar Crane

The containment polar crane is designed as Seismic Category I equipment. The crane consists primarily of two girders, a trolley, and associated components. The girders are supported from the containment walls with the top of the rail at elevation 856 feet 1 inch. The circular runway (rail) which supports the crane girders, provides for 360° rotation of the crane. The hoisting equipment is located on the trolley. The capacity of the main hoist is 100 tons.

The capacity of the auxiliary hoist is 10 tons. (Note: The containment polar crane auxiliary (10 ton) hoist has been derated to a single failure proof capacity equivalent of 3.27 tons to comply

with NUREG 0612. Loading of this hoist beyond its single failure proof load capacity requires an engineering evaluation using the guidance of NUREG 0612 before performance of the lift. If an unreviewed safety question is identified when the activity is planned, appropriate actions pursuant to regulations will be taken. These actions are controlled in accordance with plant procedures.)

The containment polar crane is used to move all of the major components (drywell head, vessel top head insulation, reactor vessel head, steam dryer shroud head with steam separator, and pool gates) as required by operations. The crane was constructed so that it could also be used for the erection of major pieces of equipment during the construction phase. The containment polar crane is not used for fuel handling purposes.

The containment polar crane is of a redundant design.

a. The containment polar crane is designed with a single failure proof, redundant load block and is able to support its rated load during a seismic event.

b. The containment polar crane main hook is a redundant "double-barbed" hook with an eye for single sling center lifting. The hook is actually composed of a hook within a hook. This feature prevents the possibility of load droppage, should one hook fail since either hook is capable of sustaining the full rated load.

c. Dual limit switches are provided on the trolley, main hoist and auxiliary hoist to prevent overtravel in their respective directions. Crane bridge rotational travel will be limited in accordance with applicable procedures.

The containment polar crane has its own lighting. This consists of control cabin lights, walkway lights, and under bridge lights (fixtures on the bottom of the crane). The under bridge lights are high pressure sodium (HPS) fixtures and precautions are taken (when maintenance is required) to avoid introducing sodium/mercury into the upper containment pool.

9.1.4.2.2.2 Fuel Building Crane

The fuel building crane is designed as Seismic Category I equipment. The crane consists of two girders and a trolley. The girders are supported by the rails. The rails are supported from columns within the fuel building. The hoisting equipment is located on the trolley. The capacity of the main hoist is 125 tons. The capacity of the auxiliary hoist is 10 tons. (Note: The fuel building crane main (125 ton) hoist has been derated to a single failure proof capacity equivalent of 62 tons to comply with NUREG 0612. Additionally, the fuel building crane auxiliary (10 ton) hoist has been derated to a single failure proof capacity equivalent of 3.27 tons to comply with NUREG 0612. Loading of these hoists beyond their single failure proof load capacity requires an engineering evaluation using the guidance of NUREG 0612 before performance of the lift. If an unreviewed safety question is identified when the activity is planned, appropriate actions pursuant to regulations will be taken. These actions are controlled in accordance with plant procedures.)

The fuel building crane is used for spent fuel cask handling operations, maintenance, and equipment removal. The crane handles major components (the spent fuel shipping casks, pool gates and shield plugs, and the fuel cooling and cleanup system heat exchangers) as required by operations. The crane was constructed such that it could be used for the erection of major pieces of equipment during the construction phase.

The range of travel of the fuel building crane covers the floor area from the west end of the fuel building to the west edge of the spent fuel storage pool. Termination of crane travel by pairs of crane railstops further prevents the crane from moving a cask over the spent fuel storage pool. Thus, the potential hazard of a cask drop accident involving the spent fuel in the fuel storage pool is eliminated. See Drawing M01-1107-5.

Limit switches are provided for the bridge, trolley, and the main and auxiliary hoists to prevent overtravel in their respective directions. Additionally, the main hoist is provided with redundant limit switches to limit upward travel of the main hook, so that the main hook cannot be raised above elevation 771 feet 0 inch when lifting the fuel shipping cask. Administrative procedures for resetting of the limit switches shall allow the main hook to be raised above elevation 771 feet 0 inches for loads other than the fuel shipping cask. This restricts the fuel shipping cask from being raised to the level of the fuel handling floor and limits the height for a potential fuel cask drop accident. The setpoint of the limit switches can be changed to accommodate different cask designs.

An accidental drop of the cask can occur only over the railroad tracks near the shipping car, the cask wash down area, or over the cask storage pool, as discussed in Subsection 15.7.5.3.

9.1.4.2.3 Fuel Servicing Equipment

The fuel servicing equipment described below has been designed in accordance with the criteria listed in Table 9.1-2.

9.1.4.2.3.1 Fuel Prep Machine

Fuel preparation machines, Figure 9.1-5, are mounted on the walls of the fuel storage pools and are used for stripping reusable channels from the spent fuel and for rechanneling the new fuel. The machine is also used with the fuel inspection fixture to provide an underwater inspection capability.

The fuel preparation machine consists of a work platform, a frame, and a moveable carriage. The frame and moveable carriage are located below the normal water level in the fuel storage pool, thus providing a water shield for the fuel assemblies being handled. The fuel preparation machine carriage has a permanently installed up-travel-stop to prevent raising fuel above the safe water shield level. The moveable carriage is operated by a foot pedal controlled air hoist.

9.1.4.2.3.2 New Fuel Inspection Stand

The new fuel inspection stand, Figure 9.1-6, serves as a support for the new fuel bundles undergoing receiving inspection and provides a working platform for technicians engaged in performing the inspection.

The new fuel inspection stand consists of a vertical guide column, a lift unit to position the work platform at any desired level, bearing seats and upper clamps to hold the fuel bundles in position.

9.1.4.2.3.3 Channel Bolt Wrench

The channel bolt wrench, Figure 9.1-7, is a manually operated device approximately 12 feet (3.6 meters) in overall length. The wrench is used for removing and installing the channel fastener assembly while the fuel assembly is held in the fuel preparation machine.

The channel bolt wrench has a socket which mates and captures the channel fastener cap screw.

9.1.4.2.3.4 Channel Handling Tool

The channel handling tool, Figure 9.1-8, is used in conjunction with the fuel preparation machine to remove, install, and transport fuel channels in the fuel storage pool.

The tool is composed of a handling bail, a lock/release knob, extension shaft, angle guides, and clamp arms which engage the fuel channel. The clamps are actuated (extended or retracted) by manually rotating lock/release knob.

The channel handling tool is suspended by its bail from a spring balancer on the channel handling boom located on the fuel pool periphery.

9.1.4.2.3.5 Fuel Pool Sipper

The fuel pool sipper, Figure 9.1-9, provides a means of isolating a fuel assembly in demineralized water in order to concentrate fission products in relation to a controlled background.

The fuel pool sipper consists of a control panel assembly and a sipping container.

9.1.4.2.3.6 General Purpose Grapple

The general purpose grapple, Figure 9.1-11, is a handling tool used generally with the fuel. The grapple is normally installed on the fuel handling/refueling platforms but can be attached to the jib crane, to handle fuel during channeling.

9.1.4.2.3.7 Jib Crane

The jib crane, Figure 9.1-12, consists of a motor-driven swing boom monorail and a motor-driven trolley with an electric hoist. Jib cranes are mounted along the edge of the fuel building and containment storage pools to be used during refueling operations. Use of the jib crane leaves the refueling platform or fuel handling platform free to perform general fuel shuffling operations and still permit uninterrupted fuel preparation in the work area. The hoist has a full capacity brake and in-series adjustable up-travel limit switches. On hoisting, the first independently adjustable limit switch automatically stops the hoist cable terminal approximately 8 feet below the jib crane base. Continued hoisting is possible by depressing a momentary contact, up-travel override push button on the pendant together with the normal hoisting push button. The additional independent switch automatically cuts hoist power at the maximum safe up-travel limit. When the jib crane is used in the handling of hazardous radioactive materials that must be kept below a specific water level, a fixed tool length stop is installed on the hoist cable to prevent further hoisting when that level is reached. The jib crane is normally located adjacent to the fuel storage pool and connected to the service outlet provided.

9.1.4.2.3.8 Fuel Handling Platform

Refer to Subsection 9.1.4.2.7.3 for fuel handling platform.

9.1.4.2.3.9 Channel Handling Boom

A channel handling boom, Drawing 112D4340, with a spring-loaded balance reel is used to assist the operator in supporting a portion of the weight of the channel as it is removed from the fuel assembly. The boom is set between the fuel preparation machines. With the channel handling tool attached to the reel, the channel may be conveniently moved between fuel preparation machines.

9.1.4.2.3.10 Fuel Transfer System

The inclined fuel transfer system (Figure 9.1-14) is used to transfer fuel, control rods, defective fuel storage containers, and other small items between the containment and the fuel building pools by means of a carriage traveling in a transfer tube (a 23-inch ID stainless steel pipe). In the containment upper pool, the transfer tube connects to pool penetration and to a sheave box. Connected to the sheave box is a 24-inch flap valve, a vent pipe, cable enclosures, and a fill valve. In the fuel building pool, the transfer tube connects to a 24-inch gate valve. A bellows connects the building penetration to the valve and transfer tube to prevent water entrapment between the tube and penetration. A 4-inch Weldolet located on the transfer tube approximately 2 feet above the fuel building pool water level and a motor-operated valve are provided for connections to a drain pipe for water level control in the transfer tube. A containment isolation assembly containing a blind flange and a bellows which connects from the containment isolation assembly to the building containment penetration are provided to make containment isolation. A hand-operated 24-inch gate valve is provided to isolate the reactor building pool water from the transfer tube so that the blind flange can be installed. A hydraulically actuated upender is provided in each pool for rotating part of the carriage, the tilt tube, to the vertical position for loading and unloading and to the inclined position for transfer. The carriage consists of the tilt tube and a follower connected with a pivot pin which allows upending of the tilt tube while maintaining the follower in the inclined position. The carriage has rollers and wheels which ride on tracks within the transfer tube and upenders to assure low friction, correct carriage orientation, and smooth transition across valves and between other components. The tilt tube is designed to accept two different insert - a fuel bundle insert with a two-bundle capacity and a control rod insert for control rods, defective fuel storage container, and other small items.

A winch, located on the containment refueling floor, uses two cables attached to the lower end of the follower for pulling the carriage from the fuel building to the containment and for controlling the carriage descent velocity. A slow winch speed is provided for starting and stopping the carriage to limit the acceleration on the fuel assemblies. Cable underload and overload protection is provided by a load cell. Carriage position readout is provided. Cable enclosures, attached to the sheave box and projecting above the containment upper pool water level, provides the means for cable exit from the transfer tube while isolating the pool water from the tube.

A vent pipe with a fluid stop connected to the containment ventilation system isolates the displaced air in the tube during filling from the reactor building atmosphere and confines the water surge to the pool water.

A hydraulic power unit is provided in each building to actuate the cylinders attached to the upenders, the fill valve, the flap valve, and the fuel building gate valve.

In both buildings, the pool area in which the transfer system components are located is physically separated from the fuel storage area by a concrete wall which serves as a positive barrier to prevent fuel in the storage area from being uncovered in the event of loss of pool water through the transfer system. In addition, these walls are provided with gates to allow drainage of the transfer pool areas for maintenance and/or removal of the transfer tube and components.

Control panels are provided in close proximity to each transfer pool area and are connected for voice and interlock communication. The containment and fuel building panels have control buttons for actuating their respective upender, a button for initiating the transfer sequence to the other building and a stop button. The transfer operation functions on an automatic basis with provision made for manual override. Automatic sequencing is accomplished by use of an electronic controller located in the fuel building which utilizes sensors for confirming the successful completion of each step before initiating the next step. The completion of a transfer sequence is signaled at the control panels.

Interlocks assure the correct sequencing of the transfer system components and fuel handling equipment during automatic or manual override operation. Interlocks prevent the refueling platform from moving into the containment building transfer area unless the upender (7) is in the vertical position and prevent upender movement if the platform is in the transfer area. Interlocks prevent the fuel handling platform from moving into the fuel building transfer area unless the upender (31) is in the vertical position and prevent movement of the upender if the platform is in the transfer area.

The refueling interlocks instrumentation and control and other control safety aspects of the refueling system are described and evaluated in Section 7.6.

A typical operational sequence for the fuel transfer system (Figure 9.1-14) is described as follows. As a starting point, assume the carriage (24) is in the containment transfer pool with the tilt tube (24A) supported by the upender (7) in the inclined position. In this position, the sheave box cover (11) and manual gate valve (17) are open with the fill valve (13), bottom gate valve (25) and drain valve (27) closed. The operational sequence is as follows:

a. The hydraulic cylinder (9) is actuated to push the upender and tilt tube (7 and 24-A) to the vertical position.

b. Load and unload fuel, control rods or other items into and from the tilt tube.

c. The hydraulic cylinder (9) is actuated to pull the tilt tube into the inclined position for transfer.

d. The automatic operation is started by depressing the transfer button on the containment control panel. This starts the winch (1) unwinding the cables to lower the carriage (24).

e. The sheave box cover (11) closes.

f. The carriage is stopped approximately 2 feet above the bottom gate valve (25).

g. The drain valve (27) is opened and water is drained to the level of drain pipe attachment to the transfer pipe (20).

h. The bottom gate valve (25) is opened.

i. The winch lowers the carriage until it is stopped and supported by the pivot arm framing (32).

j. The hydraulic cylinder (9) is actuated to push the upender (31) and tilt tube (24-A) to the vertical position.

k. Unload and load cargo.

l. The hydraulic cylinder is actuated to lower the tilt tube and upender to the inclined position.

m. The winch is actuated by depressing the fuel building control panel's transfer button and pulls the carriage (24) to a position approximately 2 feet above the bottom gate valve (25) where it is automatically stopped.

n. The bottom gate valve (25) and drain valve (27) are closed.

o. The fill valve (13) is opened to fill the transfer tube. After a time delay, the fill valve closes.

p. The sheave box cover (11) is opened when sensors indicate that the transfer tube (20) and vent pipe (4) are filled with water.

q. The carriage is pulled to the containment transfer pool (starting point).

After transfer operations are completed, the carriage will be stored in the containment building transfer pool on the upender (7). Containment isolation is then made as follows:

a. Close the manual gate valve (17).

b. Remove/loosen bolts from the containment isolation assembly (18) as required to allow insertion of the blind flange.

c. Lower transfer tube with the hydraulic cylinders (16).

d. Rotate blank flange to the closed position.

e. Relieve the pressure on the cylinders

f. Tighten the bolts.

Normally, containment isolation is made by the containment isolation assembly and blind flange, containment bellows (19) and the steel containment penetration. Special gaskets and double ply bellows are provided for leak checking to assure containment isolation. Alternatively, the blind flange may be removed for short periods of time during power operation, as allowed by the Technical Specifications. Leak testing of this alternative configuration (including transfer tube, associated drain line isolation valves, bellows, and flange connections) is not required because:

- these periods of time are short wth respect to the overall duration of power operations,
- the transfer tube terminates below the fuel building spent fuel pool water level, and
- the configuration of the transfer tube drain line is controlled by the Technical Specifications.

Refer to Table 9.1-3 for component identification essential classifications, safety classifications, quality groups, and seismic categories.

9.1.4.2.4 Servicing Aids

General area underwater lights are provided with a suitable reflector for illumination. Suitable light support brackets are furnished to support the lights in the reactor vessel to allow the light to be positioned over the area being serviced independent of the platform. Local area underwater lights are small diameter lights for additional illumination. Drop lights are used for illumination where needed.

A radiation hardened designed portable underwater closed circuit television camera is provided. The camera may be lowered into the reactor vessel and/or fuel storage pool to assist in the inspection and/or maintenance of these areas. The camera lens is capable of pitching 90° which allows infinite scanning of 360°, solid angle.

A general purpose, plastic viewing aid is provided to float on the water surface to provide better visibility. The sides of the viewing aid are brightly colored to allow the operator to observe it in the event of filling with water and sinking. A portable, submersible type, underwater vacuum cleaner is provided to assist in removing crud and miscellaneous particulate matter from the pool floors, or the reactor vessel. The pump and the filter unit are completely submersible for extended periods. The filter "package" is capable of being remotely changed, and the filters will fit into a standard shipping container for off-site burial. Fuel pool tool accessories are also provided to meet servicing requirements. A fuel sampler is provided. This is to be used to detect defective fuel assemblies during open vessel periods while the fuel is in the core. The fuel sampler head isolates individual fuel assemblies by sealing the top of the fuel channel and pumping water from the bottom of the fuel assembly, through the fuel channel, to a sampling station, and return to the primary coolant system. After a "soaking" period a water sample is obtained and is radio-chemically analyzed.

9.1.4.2.5 Reactor Vessel Servicing Equipment

The essentiality and safety classifications, the quality group, and the seismic category for this equipment is listed in Table 9.1-4. Following is a description of the equipment designs in reference to that table.

9.1.4.2.5.1 Reactor Vessel Service Tools

These tools may be used when the reactor is shut down and the reactor vessel head is being removed or reinstalled. Tools in this group are:

a. stud handling tool,

b. stud wrench,

c. nut runner,

d. stud thread protector,

e. thread protector mandrel,

f. bushing wrench,

g. seal surface protector,

h. stud elongation measuring rod,

i. dial indicator elongation measuring device, and

j. head guide cap

k. stud hole protectors

l. stud loosening tool

These tools are designed for a 40-year life in the specified environment. When carbon steel is used, it is either hard chrome plated, parkerized, or coated with an approved paint per Regulatory Guide 1.54.

9.1.4.2.5.2 Steamline Plug

The steamline plugs are used during reactor refueling or servicing; they are inserted in the steam outlet nozzles from inside of the reactor vessel to prevent a flow of water from the reactor well into the main steamline during servicing of safety/relief valves, main isolation valves, or other components of the main steamlines, while the reactor water level is at the refueling level. The steamline plug design provides two seals of different types. Each one is independently capable of holding full head pressure. The equipment is constructed of noncorrosive materials.

9.1.4.2.5.3 Shroud Head Stud Locking Device Wrench

This hand operated tool is supported from a chainfall/hoist and is used to operate the shroud head stud locking devices. It is made of electropolished stainless steel for easy decontamination and to resist corrosion. Calculations and test have been performed to confirm the design.

9.1.4.2.5.4 Head Holding Pedestal

Three pedestals are provided for mounting on the refueling floor for supporting the reactor vessel head and strongback/carousel during periods of reactor service. The pedestals have studs which engage three evenly spaced stud holes in the head flange. The flange surface rests on replaceable wear pads made of aluminum. When resting on the pedestals, the head flange is approximately 3 feet above the floor to allow access to the seal surface for inspection and O-ring replacement.

The pedestal structure is a carbon steel weldment coated with an approved paint. It has a base with bolt holes for mounting it to the concrete floor.

A seismic analysis was made to determine the seismic forces imposed onto the pedestals floor anchors, using the floor response spectrum method. The structure is designed to withstand these calculated forces and meet the requirements of AISC.

9.1.4.2.5.5 Head Stud Rack

The head stud rack may be used for transporting and storage of eight reactor pressure vessel studs. It is suspended from the auxiliary building crane hook when lifting studs from the reactor well to the operating floor.

The rack is made of aluminum to resist corrosion, and it is designed for a safety factor of 5 with respect to the ultimate strength of the material.

The structure is designed in accordance with the "Aluminum Construction Manual" by the Aluminum Association.

Also, all of the studs may be removed and be transported with the reactor pressure vessel head.

9.1.4.2.5.6 Dryer and Separator Strongback

The dryer and separator strongback is a lifting device used for transporting the steam dryer or the shroud head with the steam separators between the reactor vessel and the storage pools. The strongback is a cruciform shaped I beam structure which has a hook box with two hook pins in the center for engagement with the reactor service crane sister hook and it has a socket with a pneumatically operated pin on the end of each arm for engaging it to the four lift eyes on the steam dryer or shroud head.

The strongback has been designed such that one hook pin and one main beam of the cruciform will be capable of carrying the total load and so that no single component failure will cause the load to drop or swing uncontrollably out of an essentially level attitude. The safety factor of all lifting members is 5 or better in reference to the ultimate breaking strength of the material.

The structure is designed in accordance with "The Manual of Steel Construction" by AISC. The completed assembly was proof tested at 125% of rated load.

9.1.4.2.5.7 Head Strongback/Carousel

The RPV head strongback/carousel is an integrated piece of equipment consisting of a cruciform shaped strongback, a circular monorail, and a circular storage tray.

The strongback is a box beam structure which has a hook box with two hook pins in the center for engagement with the reactor service crane sister hook. Each arm has a lift rod for engagement to the four lift lugs on the RPV head. The monorail is mounted on extensions of the strongback arms and four additional arms equally spaced between the strongback arms. The monorail circle matches the stud circle of the reactor vessel and it serves to suspend stud tensioners and nut handling devices. The storage tray is suspended from the ends of the same eight arms and surrounds the RPV flange. A manifold is mounted underneath the hook box for distributing hydraulic and pneumatic pressures to equipment traveling on the monorail. The head strongback/carousel serves the following functions:

a. Lifting of Vessel Head

The strongback, when suspended from the reactor service crane main hook, will transport RPV head plus the carousel with all its attachments between the reactor vessel and storage on the pedestals.

b. Tensioning of Vessel Head Closure

The carousel, when supported on the RPV head on the vessel will carry four tensioners, its own weight, the strongback, storage of studs, nuts, washers, thread protectors and associated tools and equipment. The four stud runners and four tensioners are suspended from a monorail above the vessel stud circle. Each tensioner and stud runner has an air-operated hoist with individual controls.

c. Storage with RPV Head

The carousel, when stored with the RPV head on the head holding pedestals, carries the same load for item b. When in its storage position, it accommodates nut and stud cleaning and inspection.

d. Storage without RPV Head

During reactor operation, the carousel is stored on the refueling floor, straddling the three pedestals. Support cradles with a flat base are provided for supporting the four carousel legs on the floor.

The strongback with its lifting components is designed to meet the Crane Manufacturers Association of America, Specification No. 70. The design provides a 15% impact allowance and a safety factor of 5 in reference to the ultimate strength of the material used. After completion of welding and before painting, the lifting assembly is proof load tested and all load affected welds and lift pins are magnetic particle inspected.

The steel structure is designed in accordance with "The Manual of Steel Construction" by AISC. Aluminum structures are designed in accordance with the "Aluminum Construction Manual" by the Aluminum Association.

The strongback is designed in accordance with ASME, American National Standard for overhead hoists ANSI B30.16 - 1973, Paragraph 16-1.2.2.2 and such that one hook pin and two of the four arms of the structure are capable of carrying the total load, and so that no single component failure will cause the load to drop or swing uncontrollably out of an essentially level attitude.

e. Lifting of the Drywell Head

The RPV head strongback, when suspended from the reactor service crane main hook, will transport the drywell head between the reactor vessel and storage on the pedestals.

Regulatory Guide 1.54

General compliance or alternate assessment for Regulatory Guide 1.54, which provides design criteria for protective coatings may be found in Section 6.1.

9.1.4.2.6 In-Vessel Servicing Equipment

The instrument handling tool is attached to the refueling platform auxiliary hoist and is used for removing and installing neutron source holders and incore nuclear instrumentation. Each incore instrumentation guide tube is sealed by an O-ring on the flange and in the event that the seal needs replacing an incore guide tube sealing tool is provided.

The auxiliary hoist on the refueling platform is used with appropriate grapples to handle control rods, flux monitor dry tubes, sources, and other internals of the reactor. Interlocks on both the grapple hoists and auxiliary hoist are provided for safety purposes; the refueling interlocks are described and evaluated in Section 7.6.

9.1.4.2.7 Refueling Equipment

Fuel movement and reactor servicing operations are performed from platforms which span the refueling, servicing, and storage cavities. The containment building is supplied with a refueling platform for fuel movement and servicing, an auxiliary platform for servicing operations from the refueling floor level. The Fuel Building is supplied with a fuel handling platform for fuel movement and servicing.

9.1.4.2.7.1 Refueling Platform

The refueling platform is a gantry arrangement which is used to transport fuel and reactor components to and from pool storage and the reactor vessel. The platform spans the fuel storage and vessel pools on bedded tracks in the refueling floor. A telescoping mast and grapple suspended from a trolley system is used to lift and orient fuel bundles for core, storage rack, or upender placement. Control of the platform is from an operator station on the main trolley. A position indicating system and travel limit computer is provided to locate the grapple over the vessel core and prevent collisions with pool obstacles. Two 1000 pound capacity auxiliary hoists, one main trolley mounted and one auxiliary monorail trolley mounted, are provided for incore servicing such as detector module replacement, fuel support replacement, jet pump servicing, and control rod blade replacement. The grapple in its normal up interlock position provides 8 feet 6 inches minimum water shielding over the active fuel during transit. The fuel grapple hoist has a redundant load path so that no single component failure will result in a fuel bundle drop. Interlocks on the platform prevent unsafe operation over the vessel during rod movements, avoid unsafe operation in the transfer tube upender zone, limit travel of the fuel grapple, and interlock grapple hook engagement with the sensed grapple load.

Collision avoidance between the Refueling Bridge and Auxiliary Platform is provided by a combination of a bypass able interlock, Refueling Bridge encoder programming, and procedural controls.

9.1.4.2.7.2 Auxiliary Platform

An auxiliary platform is provided to allow versatility of operations. This platform will operate over the containment building pool and will provide an additional work area for reactor servicing. The auxiliary platform is non safety-related and seismically supported.

9.1.4.2.7.3 Fuel Handling Platform

The fuel handling platform is a gantry arrangement which is used to transport fuel within the fuel building storage pool. The platform spans the fuel storage and transfer tube upender pools on tracks bedded in the fuel building floor. A telescoping mast and grapple is used to lift and orient fuel bundles for storage rack or upender placement. Control of the platform is from an operator station on the main trolley. A vertical position indicating system is provided for the grapple. Limit switches are located on the end trucks to interlock the platform from running into pool obstacles. A 1000-pound capacity auxiliary hoist is mounted on the auxiliary monorail trolley and is used for moving new fuel from the new fuel vault to the storage pool and control rod blade transport. Both main fuel hoist and monorail auxiliary hoist have redundant load paths such that no single component failure will result in a fuel bundle drop. During transfer of fuel, the grapple in its normal fully retracted position provides 8 feet 0 inches minimum water shielding over the active fuel.

9.1.4.2.8 Storage Equipment

Specially designed equipment storage racks are provided. Additional storage equipment is listed on Table 9.1-1. For fuel storage racks description and fuel arrangement, see Subsections 9.1.1 and 9.1.2.

Defective fuel assemblies are placed in special fuel storage containers, which are stored in the defective fuel storage rack, both of which are are designed for the defective fuel. These may be used to isolate leaking or defective fuel while in the fuel pool and during shipping. Channels can also be removed from the fuel bundle while in a defective fuel storage container.

The fuel pool sipper may be used for out-of-core wet sipping at any time. They are used to detect a defective fuel bundle while circulating water through the fuel bundle in a closed system. The containers cannot be used for transporting a fuel bundle. The bail on the container head is designed not to fit into the fuel grapple.

9.1.4.2.9 Under Reactor Vessel Servicing Equipment

The primary function of the under reactor vessel servicing equipment is to: (1) remove and install control rod drives, (2) service thermal sleeve and control rod guide tube, (3) install and remove the neutron detectors. Table 9.1-5 lists the equipment and tools required for servicing. Of the equipment listed, the equipment handling platform and the control rod drive handling equipment are powered pneumatically.

The control rod drive handling equipment is designed for the removal and installation of the control rod drives from their housings. This equipment is used in conjunction with the equipment handling platform. It is designed in accordance with OSHA - 1910.179, American Institute of Steel Construction, AISC.

The equipment handling platform provides a working surface for equipment and personnel performing work in the under vessel area. It is a polar platform capable of rotating 360°. This equipment is designed in accordance with the applicable-requirements of OSHA (Vol. 37, No. 202, Part 1910N), AISC, ANSI-C-I (National Electric Code).

The seal cap is designed to prevent leakage of primary coolant from incore detector housings during detector replacement. It is designed to industrial codes, manufactured from noncorrosive material.

The thermal sleeve installation tool locks, unlocks, and lowers the thermal sleeve from the control rod drive guide tube.

Incore flange seal test plug is used to determine the pressure integrity of the incore flange O-ring seal. It is constructed of noncorrosive material.

The key bender is designed to install and remove the anti rotation key that is used on the thermal sleeve.

9.1.4.2.10 Description of Fuel Transfer

9.1.4.2.10.1 Arrival of Fuel on Site

The new fuel arrives at the site in special shipping containers. Each shipping container has space for two fuel bundles. The shipping container consists of a metal inner container positioned by means of cushioning materials within an outer container. Both inner and outer containers are reusable.

After arrival of the fuel shipment and receipt of clearance for unloading, the outer containers are visually inspected for indications of rough handling or possible damage during shipping.

9.1.4.2.10.2 Refueling Procedure

The plant refueling and servicing sequence diagram is shown in Figure 9.1-15. Fuel handling sequences are shown in Figures 9.1-17 through 9.1-21 and described below. Typical fuel building and containment building layouts are shown in Figures 9.1-22 and 9.1-23, and component drawings of the principal fuel handling equipment are shown in Figures 9.1-5 through 9.1-12, and 9.1-14 and Drawing 112D4340.

With the reactor shut down, the containment isolation blind flange between the fuel and containment building can be removed. (The containment isolation blind flange may be removed for short periods of time during power operation, as allowed by the Technical Specifications.) At this time, all channeled new bundles may be transferred to the containment pool where the refueling platform places them into containment pool storage racks. These racks have a capacity for 25% of a core load of fuel. If there are no channeled new fuel bundles, an unchanneled bundle is placed in the fuel preparation machine to await an irradiated spent fuel channel. Pipe connections at the bottom of the reactor well allow the reactor well water to drain by gravity to the condenser. After the reactor well has been drained, the drywell head, vessel head, and the dryer are removed by the polar crane and placed in their respective storage areas (see Figure 9.1-23). The polar crane and cruciform-shaped strongback will be used to handle the 96-ton load of RPV head and attachments. The strongback is designed so that no single component failure will cause the load to drop or swing uncontrollably out of an essentially horizontal attitude.

The strongback attaches to the crane sister hook by means of an integral hook box and two hook pins. Each pin is capable of carrying the rated load. Two of the four arms of the cruiform are capable of carrying the rated load.

On both ends of each leg are adjustable lifting rods, suspended vertically to attach the lifting legs to the RPV head. These are for adjustment for even four-point load distribution and allow for some flexibility in diametrical location of the lifting lugs on the head.

The maximum potential drop height is at the point where the head gets lifted vertically from the vessel and before moving it horizontally to the head storage pedestals. The elevation difference from vessel flange to storage elevation is approximately 30 feet.

The shroud head load of 44.5 tons and the steam dryer load of 29.5 tons will both be lifted with the dryer/separator strongback.

This strongback is a cruciform shape with box-shaped sockets at the four ends. Each socket box has two compartments to accommodate the two different lug spacings on the dryer and on the shroud head. Pneumatically operated lifting pins will penetrate the sockets to engage the lifting lugs.

Each of the above strongbacks are load tested at 125% rated load. At this test, measurements are taken before test load, under test load, and after releasing load, to verify that deflections are within acceptable limits. A magnetic particle test of structural welds is performed after the load test to assure structural integrity.

A seal exists around the vessel opening to seal the drywell from the upper containment pool. Once the upper containment pool is filled, the separator is removed and transferred to its storage area using the dryer/separator strongback. The tools used in these and subsequent reactor servicing operations are listed in Table 9.1-1. Once access to the core is possible, the refueling platform can relocate assemblies to and from the containment pool storage racks. Simultaneously the control rod drive hydraulic system and the neutron monitoring system may be serviced from beneath the vessel.

During refueling the refueling platform transfers the spent fuel from the core to the containment pool upender and fuel transfer is made to the fuel building upender. The fuel handling platform may place the spent fuel assembly either in a fuel preparation machine, if it is to be immediately de-channeled, or directly in the spent fuel storage racks. The channeling of new fuel and de-channeling of spent fuel is discussed in subsection 9.1.4.2.10.2.1.2. The refueling platform then transfers a new fuel assembly to the upender, and may then place another new fuel bundle in a fuel preparation machine for channeling. The critical path fuel handling operations in the fuel handling area will be performed by the fuel equipment. Therefore, the operation of the fuel handling platform will be administratively coordinated with the operations of the refueling platform and transfer system to assure a safe, continuous fuel handling process.

When refueling and servicing are completed, the replacement of vessel internals starts either before or during reactor well water drain down. After the reactor well water is drained, the vessel internals replacement is completed and the vessel and drywell heads are replaced. The reactor well is again filled by pumping water from the condensate storage tank. When all transfer from the upper containment pool to the transfer canal is completed, the containment is isolated and startup operations can begin.

9.1.4.2.10.2.1 New Fuel Preparation

9.1.4.2.10.2.1.1 Receipt and Inspection of New Fuel

Outer shipping crates containing two fuel bundles supported by an inner metal container are used to transport the new fuel. Both inner and outer shipping containers are reusable. The shipping crates are inspected prior to the transport vehicle entering the fuel building truck bay. The hold-down bolts are removed from the outer container and the cover is removed to gain access to the metal inner container. A sling is attached to the auxiliary hoist on the fuel building crane and the inner container is lifted from the outer container and positioned on the fuel handling building floor storage area. The receiving station shall include a separate area where the crate cover and the inner metal container can be removed from the crate.

The metal containers are inspected, and then transported via a sling attached to the fuel building crane auxiliary hoist to the disassembly area where the top and end covers are removed.

Packing material is removed from the interior, and the contents are visually inspected to verify that there has been no damage during shipment.

Special bundle hold-down bars are installed at locations on the container to help protect against fuel bundle drop accidents during vertical upending of the container. A special sling is attached to lifting lugs at one end of the container. The container is lifted by the sling on the auxiliary hoist on the fuel building crane, pivoted to the vertical position and secured to a vertical support. The sling is removed after the container has been secured and the bundle hold-downs are unfastened. Each fuel bundle is removed from the container using an approved tool for handling new fuel attached to the auxiliary hoist on the fuel building crane and is transferred to the new fuel inspection stand.

All inspections are performed with the fuel bundles either in the vertical position, securely seated in the new fuel inspection stand or suspended from the fuel building overhead crane. Inspections are performed in accordance with a fuel inspection check off sheet by qualified inspectors. While the two fuel bundles are being inspected, two other fuel bundles are being prepared for unpacking and inspection. In the event a fuel bundle fails inspection, it is tagged and discrepancies noted on the inspection sheets.

9.1.4.2.10.2.1.2 Channeling New Fuel

After satisfactory inspection, the fuel bundle may be channeled with new or used (irradiated) channels.

When using new channels the fuel bundle is normally channeled in the new fuel inspection stand. It is then released from the fuel inspection stand and using the approved tool and the auxiliary hoist on the fuel building crane, the fuel bundle is transferred to one of the storage racks in the new fuel storage vault.

When using irradiated channels, new fuel is unloaded from the new fuel vault and transported to the fuel racks in the fuel pool. Usually channeling new fuel is done concurrently with de-channeling spent fuel. Two fuel preparation machines are located in the fuel pool; one used for de-channeling spent fuel and the other to channel new fuel. The procedure is as follows: Using the fuel handling platform in the fuel building, a spent fuel bundle is transported to the fuel prep

machine. The channel is unbolted from the bundle using the channel bolt wrench. The channel handling tool is fastened to the top of the channel and the fuel prep machine carriage is lowered removing the fuel from the channel. The channel is then positioned over a new fuel bundle located in fuel prep machine number 2 and the process reversed. The channeled new fuel is stored in the pool storage racks ready for insertion into the reactor.

9.1.4.2.10.2.1.3 Equipment Preparation

Another ingredient in a successful refueling outage is equipment and new fuel readiness. Equipment long lying dormant must be brought to life. All tools, grapples, slings, strongbacks, stud tensioners, etc., should be given a thorough inspection and operational check and any defective (or well worn) parts should be replaced. Air hoses on grapples should be checked. Crane cables should be routinely inspected. All necessary maintenance should be performed to preclude outage extension due to equipment failure.

9.1.4.2.10.2.2 Reactor Shutdown

The reactor is shut down in accordance with a prescribed procedure (Ref. Chapter 13). The drywell head cavity is deflooded during this time in preparation for drywell and vessel head removal.

9.1.4.2.10.2.2.1 Drywell Head Removal

Immediately after cooldown and deflooding, the work to unbolt the drywell head can begin. The drywell head will be attached by swing bolts. The swing bolts, are loosened to clear the head and swing outward to lean on the reactor well wall. The unbolted drywell head is lifted by the overhead building crane utilizing the RPV strongback, to its appointed storage space on the refueling floor. The drywell seal surface protector is installed before any other activity proceeds in the reactor well area.

9.1.4.2.10.2.2.2 Reactor Well Servicing

When the drywell head has been removed, an array of piping is exposed that must be serviced. Various vent piping penetrations through the reactor well must be removed and the penetrations made watertight. RPV head piping and insulation are removed and transported to the refueling floor for storage.

The water level in the vessel is raised to just above the vessel flange to aid in cooling the RPV metal. After the cooling is complete, the water level in the vessel is lowered to just below the vessel flange in preparation for head removal.

9.1.4.2.10.2.3 Reactor Vessel Opening

9.1.4.2.10.2.3.1 Vessel Head Removal

The combination head strongback, carousel, stud tensioner and stud runner is transported by the containment building crane and positioned on the reactor vessel head.

Each stud is tensioned and its nut loosened in a series of 2 to 3 passes. Finally, when the nuts are loose, the studs are removed from the lower flange using the stud runner. The studs are then supported in the head flange with the nuts and added spacers. Generally all studs are

transported with the RPV head. The nut and washer is removed and a stud guide cap is installed on any studs that are not removed from the RPV flange.

Next, the head, strongback, and carousel are transported by the containment building crane to the head holding pedestals on the refueling floor. The head holding pedestals keep the vessel head elevated to facilitate inspection and "O" ring replacement.

9.1.4.2.10.2.3.2 Dryer Removal

The dryer-separator strongback is lowered by the containment building crane and attached to the dryer lifting lugs. The dryer is lifted from the reactor vessel and transported to its storage location in the dryer storage pool adjacent to the reactor well. The dryer is not expected to be highly radioactive and, therefore, is transported in air.

9.1.4.2.10.2.3.3 Separator Removal

In preparation for the separator removal, the separator is unbolted and unlatched from the shroud using wrenches furnished for this purpose. When the unbolting is accomplished, the dryer-separator strongback is lowered into the vessel and attached to the separator lifting lugs. The water in the reactor well and the separator storage pool is raised to containment pool water level and the separator is transferred to its allotted storage place in the pool.

9.1.4.2.10.2.3.4 Fuel Bundle Sampling

During reactor operation, the core offgas radiation level is monitored. If a rise in offgas activity has been noted, the reactor core may be sampled during shutdown to locate any leaking fuel assemblies. If a defective bundle is found, it is transferred to the fuel building storage pool and stored in a special defective fuel storage container to minimize background activity in the storage pool.

9.1.4.2.10.2.4 Refueling and Reactor Servicing

The gate isolating the containment pool from the reactor well is removed, thereby interconnecting the containment pool, the reactor well, and the fuel transfer area. The refueling of the reactor can now begin.

9.1.4.2.10.2.4.1 Refueling

During an eighteen month equilibrium outage, approximately 33% of the fuel is removed from the reactor vessel, 33% of the fuel is shuffled in the core (generally from peripheral to center locations), and 33% new fuel is installed. The actual fuel handling is done with the refueling platform. It is used as the principal means of transporting fuel assemblies between the reactor well and the containment pool; it also serves as a hoist and transport device. It provides an operator with work surface for almost all the other servicing operations. The platform travels on track extending along each side of the reactor well and pool and supports the refueling grapple and auxiliary hoists. The platform design permits travel over safety railings placed around the pools. The grapple is suspended from a trolley that can transverse the width of the platform. Platform movement is controlled from an operator station on the trolley. Railing is provided to keep all unauthorized personnel from entering the platform area or the inside of the refueling platform track area.

The refueling platform has two 1/2 ton auxiliary hoists. One auxiliary hoist is mounted on the reactor side of the refueling platform and projects approximately 2 feet from the frame. This hoist normally can be used with appropriate grapples to handle control rods, guide tubes, fuel support pieces, sources, and other internals of the core. The auxiliary hoist can also serve as a means of handling other equipment within the pool. The second auxiliary hoist is mounted on the platform trolley.

The platform control system permits variable-speed, simultaneous operation of all three platform motions. Maximum speeds are:

a. bridge - 50 fpm,

b. trolley - 30 fpm, and

c. grapple hoist - 40 fpm.

The refueling platform control system has two modes of operation. Platform movements can be controlled manually via the mast mounted left and right hand controllers or automatically via the operator interface cabinet located on the trolley. The operator interface cabinet provides a graphical representation of the core, fuel storage racks and inclined fuel transfer system area. The operator interface cabinet interfaces with a computer and a Programmable Logic Controller (PLC) to perform multiple axis movement of the bridge, trolley and main fuel hoist to pre-selected positions, provided that all interlocks are satisfied.

A single operator can control all the motions of the platform required to handle the fuel assemblies during refueling. Interlocks on the grapple hoist prevent hoisting of a fuel assembly over the core with a control rod withdrawn; interlocks also prevent withdrawal of a blade with a fuel assembly over the core attached to the fuel grapple. Interlocks block travel over the reactor in the startup mode.

The refueling platform contains a system that indicates position of the fuel grapple over the core. The readout, in the operator's cab, matches the core arrangement cell identification numbers. The position indicator is accurate within 1/4 inch, relative to actual core position, and minimizes jogging required to correctly place the grapple over the core.

To move fuel, the fuel grapple is aligned over the fuel assembly, lowered, and attached to the fuel bundle bail. The fuel bundle is raised out of the core, moved through the refueling slot to the containment pool, positioned over the storage rack, and lowered into the rack. Fuel is shuffled and new fuel is moved from the containment pool to the reactor vessel in the same manner.

9.1.4.2.10.2.5 Vessel Closure

The following steps, when performed, will return the reactor to operating condition.

NOTE: These actions are not necessarily intended to show steps that are to be performed in the order shown.

- Core verification. The core position of each fuel assembly must be verified to assure the desired core configuration has been attained. Underwater camera with a video tape record is utilized.

- Install separator.
- Install pool gate.
- Remove the four steam line plugs.
- Drain separator storage pool and reactor well.
- Tighten Shroud Head studs.
- Install steam dryer.
- Open drywell bulkhead penetrations.
- Install vessel studs and stud guide caps for use during reactor vessel head installation.
- Install reactor vessel head.
- Install vessel head piping and insulation.
- Remove drywell seal surface protector.
- Install drywell head. Leak check.
- Pressure-test vessel, if required.
- Flood reactor well.
- Control rod drive tests. The control rod drive timing, friction and scram tests are performed as required. (The scram testing may be performed any time after the reactor pressure is over 950 psig, and must be completed prior to operating over 40% power.)
- Startup tests. The reactor is returned to full power operation. Power is increased gradually in a series of steps until the reactor is operating at rated power. At specific steps during the approach to power, the incore flux monitors are calibrated.

9.1.4.3 Safety Evaluation, Fuel Handling System

Safety aspects (evaluation) of the fuel servicing equipment are discussed in Subsection 9.1.4.2.3 and safety aspects of the refueling equipment are discussed throughout Subsection 9.1.4.2.7. A description of fuel transfer, including appropriate safety features, is provided in Subsection 9.1.4.2.10. In addition, the following summary safety evaluation of the fuel handling system is provided below.

The fuel prep machine removes and installs channels with all parts remaining under water. Mechanical stops prevent the carriage from lifting the fuel bundle or assembly to a height where water shielding is less than 8 feet. Irradiated channels, as well as small parts such as bolts and

springs, are stored underwater. The spaces in the channel storage rack have center posts which prevent the loading of fuel bundles into this rack.

There are no nuclear safety problems associated with the handling of new fuel bundles, singly or in pairs. Equipment and procedures prevent an accumulation of more than two bundles in any location.

The refueling platform is designed to prevent it from toppling into the pools during a SSE. Redundant safety interlocks are provided as well as limit switches to prevent accidentally running the grapple into the pool walls. The grapple utilized for fuel movement is on the end of a telescoping mast. At the normal up interlock position, the top of active fuel is 8 feet 6 inches below water surface, to prevent raising a fuel assembly to the point where it is inadequately shielded by water. The grapple is hoisted by redundant cables inside of the mast; and is lowered by gravity. A digital readout is displayed to the operator, showing him the exact coordinates of the grapple over the core.

The mast is suspended and gimbaled from the trolley, near its top, so that the mast can be swung about the axis of platform travel, in order to remove the grapple from the water for servicing and for storage.

The grapple has two independent hooks, each operated by an air cylinder. Engagement as well as grapple load is indicated to the operator. Mechanical interlocks prevent grapple disengagement while carrying a load. Electrical interlocks prevent slack cable, grapple overload, and up hoist travel if hooks are loaded but not fully closed.

In addition to the main hoist on the trolley, there is an auxiliary hoist on the trolley, and another hoist on its own monorail. These three hoists are precluded from operating simultaneously, because control power is available to only one of them at a time. The two auxiliary hoists have load cells with interlocks which prevent the hoists from moving anything as heavy as a fuel bundle.

The two auxiliary hoists have electrical interlocks which prevent the lifting of their loads higher than 8 feet under water. Adjustable mechanical jam-stops on the cables back up these interlocks.

In summary, the fuel handling system complies with General Design Criteria 2, 3, 4, 61, 62, and 63, and applicable portions of 10 CFR 50.

The handling of irradiated fuel requires Secondary Containment Integrity to be established as per Technical Specifications. The handling of Heavy Loads (greater than 1000 lbs.) over fuel assemblies in the spent fuel storage racks, upper containment fuel pool racks or new fuel storage vault racks is prohibited anytime when there is fuel in these racks. The handling of light loads (less than or equal to 1000 lbs.) over irradiated fuel is not restricted by the Technical Specifications. Dropping a light load onto irradiated fuel could cause fuel damage resulting in the release of radioactivity. If Secondary Containment Integrity is established, the offsite dose consequences of this event are minimal. If Secondary Containment Integrity is not established, offsite radiation exposure can occur. To minimize this potential exposure, certain limitations for handling light loads have been established in the plant procedures. These limitations include suspending crane operations over the spent fuel storage pool while fuel is stored there under the following conditions: the required AC sources are not available, and the verification of the maintenance of at least 23 feet of water over the top of irradiated fuel assemblies. This ensures

that the consequences of dropping a light load onto irradiated fuel will not exceed those already evaluated following a fuel handling accident. The consequences of a fuel handling accident are discussed in USAR Section 15.7.4.

A system-level, qualitative-type failure mode and effects analysis relative to this system is discussed in Subsection 15.A.6.5.

The safety evaluation of the new and spent fuel storage is presented in Subsections 9.1.1.3 and 9.1.2.3.

Regulatory Guide 1.13

a. General compliance or alternate approach assessment:

   1. For commitment, revision number and scope, see regulatory guide commitment matrix in Section 1.8.

b. This Regulatory Guide is applicable to the refueling platform within GE's scope of supply for this plant.

   1. The refueling platform is designed to prevent toppling into the pool during an SSE. Redundant safety interlocks are provided to prevent accidentally running the fuel grapple into the pool walls.

9.1.4.4 Inspection and Testing Requirements

9.1.4.4.1 Inspection

Refueling and servicing equipment is subject to the strict controls of quality assurance, incorporating the requirements of 10 CFR 50, Appendix B. Components defined as essential to safety, such as the fuel storage racks, refueling platform, and fuel transfer tube have an additional set of engineering specified, "quality requirements" that identify safety-related features which require specific verification of compliance to drawing requirements.

For components classified as American Society of Mechanical Engineers (ASME) Section III, the shop operation must secure and maintain an ASME "N" stamp, which requires the submittal of an acceptable ASME quality plan and a corresponding procedural manual.

Additionally, the shop operation must submit to frequent ASME audits and component inspections by resident state code inspectors.

Prior to shipment, every component inspection item is reviewed by QA supervisory personnel and combined into a summary product quality checklist (PQL). By issuance of the PQL, verification is made that all quality requirements have been confirmed and are on record in the product's historical file.

9.1.4.4.2 Testing

Qualification testing is performed on refueling and servicing equipment prior to multi-unit production. Test specifications are defined by the responsible design engineer and may include; sequence of operations, load capacity, and life cycles tests. These test activities are

performed by an independent test engineering group and, in many cases, a full design review of the product is conducted before and after the qualification testing cycle. Any design changes affecting function, that are made after the completion of qualification testing, are requalified by test or calculation.

Functional tests are performed in the shop prior to the shipment of production units and generally include electrical tests, leak tests, and sequence of operations tests.

When the unit is received at the site, it is inspected to ensure no damage has occurred during transit or storage. Prior to use and at periodic intervals, the major refueling system components are again tested to ensure the electrical and/or mechanical functions are operational.

Passive units, such as the fuel storage racks, are visually inspected prior to use.

Fuel handling and vessel servicing equipment preoperational tests are described in Subsection 14.2.12.1.10.

9.1.4.5 Instrumentation Requirements

The majority of the refueling and servicing equipment is manually operated and controlled by the operator's visual observations. This type of operation does not necessitate the need for a dynamic instrumentation system.

However, there are several components, that are essential to prudent operation, that do have instrumentation and control systems.

9.1.4.5.1 Refueling Platform

The refueling platform has a non-safety-related X-Y-Z position indicator system that informs the operator which core fuel cell the fuel grapple is accessing. Interlocks and control room monitor are provided to prevent the fuel grapple from operating in a fuel cell where the control rod is not in the proper orientation for refueling. Refer to Subsection 7.6.1.1 for discussion of refueling interlocks.

Additionally, there are a series of mechanically activated switches and a Programmable Logic Controller (PLC) that provides monitor indications on the operator interface cabinet for grapple limits, hoist and cable load conditions, and confirmation that the grapple's hook is either engaged or released.

A series of load cells are installed to provide automatic shutdown whenever threshold limits are exceeded on either the fuel grapple or the auxiliary hoist units.

9.1.4.5.2 Fuel Support Grapple

Although the fuel support grapple is not essential to safety, it has an instrumentation system consisting of mechanical switches and indicator lights. This system provides the operator with a positive indication that the grapple is properly aligned and oriented and that the grappling mechanism is either extended or retracted.

9.1.4.5.3 Inclined Fuel Transfer Tube

The instrumentation sensors for this system provide input to a programmable controller that automatically sequences the opening and closing of valves, the inclination and vertical upending of the fuel carriage, water levels, and the carriage traversing speeds. The microprocessor control and proximity type sensors also provide status of the fuel transfer operation on each of the two operators' consoles, one located in the fuel building and the other on the containment refueling floor. Interlocks are provided to stop transfer tube motion if shield plugs to either of two access areas, the valve room and the mid-support room, are open. The valve room is also equipped with a lock to prevent entry during transfer tube operations. Radiation considerations are described in Subsection 12.3.1.9.1.

9.1.4.5.4 Other

Refer to Table 9.1-1 for additional refueling and servicing equipment not requiring instrumentation.

9.1.4.5.5 Radiation Monitoring

The radiation monitoring equipment for the refueling and servicing equipment is evaluated in Subsection 12.3.4.3.

9.1.4.6 Departure of Spent Fuel from Site

The spent-fuel cask is shipped to the station on a special transport vehicle. The cask will be designed, built and licensed to 10 CFR 71 requirements. The transport vehicle enters the fuel building, and the building doors are closed to maintain the negative pressure environment of the fuel building. The personnel barrier is removed from the cask and health physics personnel check the cask exterior to determine if decontamination is necessary. Decontamination, if required, and washdown to remove road dirt would be performed in the cask washdown area.

The spent fuel cask is unloaded from the transport vehicle with the 125-ton capacity fuel building crane. (Note: The fuel building crane main (125 ton) hoist has been derated to a single failure proof capacity equivalent of 62 tons to comply with NUREG 0612. Since the weight of a spent fuel shipping cask would be in excess of this crane rating, an engineering evaluation using the guidance of NUREG 0612 will be required before the performance of any cask movement activity. If an unreviewed safety question is identified when the activity is planned, appropriate actions pursuant to regulations will be taken. These actions are controlled in accordance with plant procedures.) The fuel building crane tilts the cask to a vertical position on the vehicle trunnion mounts and then lifts the cask through a hatch up to an elevation slightly less than the fuel handling floor elevation.

The cask cannot be lifted high enough to clear the fuel handling floor elevation of 755 feet. This lifting limitation is achieved by redundant limit switches on the crane lifting mechanism. This lifting limitation assures that the cask cannot be moved over the spent fuel pool. In order to move the cask into the cask washdown area and into the cask storage pool, shield plugs are removed from the west walls of these facilities. Also, racks in the cask storage pool must be removed or relocated. The range of travel of the fuel building crane covers the floor area from the west end of the fuel building to the west edge of the spent fuel storage pool. Termination of crane travel by redundant pairs of crane railstops further prevents the crane from moving a cask over the spent fuel storage pool, but not over the cask storage pool. The location and orientation of storage racks in the Cask Storage Pool (Fig. 9.1-2c) prevents installation of a cask in the pool. The racks shall be emptied of fuel and removed or relocated from the pool prior to moving a cask into the pool. These actions are controlled in accordance with plant procedures. Thus, the potential hazard of a cask drop accident involving the spent fuel in the fuel storage pool is eliminated. The cask is

moved into the cask washdown area for cleaning and is then lowered into the cask storage pool, and its head and seals are removed.

The canal gates between the cask storage pool and the fuel transfer pool, and between the transfer pool and the spent fuel storage pool are opened, and spent fuel transfer to the cask started. Spent fuel is transferred under water from storage in the fuel pool, through the transfer pool to the cask using the telescoping fuel grapple mounted on the fuel handling platform. When the cask is filled with spent fuel, all pool gates are closed, and the cask seal and head are replaced.

After removal from the cask storage pool, the cask is checked by Radiation Protection personnel and decontamination performed in the cask washdown area with high pressure demineralized water sprays and by hand scrubbing as necessary to meet the activity level restriction of 10 CFR 20 Standards for Protection Against Radiation. After inspection for compliance with NRC activity level requirements, the cask is removed from the cask washdown area and loaded on the transport vehicle using the fuel building crane.

The cask cooling system of the transport vehicle is connected to the cask, and the personnel barrier is replaced. When the cask internal pressure and temperature reach equilibrium conditions, the cask is ready for shipment.

9.1.5 References

1. C. L. Martin, "Lattice Physics Methods," General Electric Company, NED0-20913.

2. Safety Analysis Report for Clinton Power Station – Extended Power Uprate, NEDC-32929, June 2001.

TABLE 9.1-1
TOOLS AND SERVICING EQUIPMENT

FUEL SERVICING EQUIPMENT

Channel Handling Boom
Fuel Preparation Machines
New Fuel Inspection Stand
Channel Bolt Wrenches
Channel Handling Tool
Fuel Pool Sipper
Jib Crane
General Purpose Grapples
Fuel Handling Platform
Fuel Transfer System

SERVICING AIDS

Tool Accessories
Actuating Poles
General Area Underwater Lights
Local Area Underwater Lights
Drop Lights
Underwater TV Monitoring System
Underwater Vacuum Cleaner
Viewing Aids
Light Support Brackets
Underwater Viewing Tube

REACTOR VESSEL SERVICING EQUIPMENT

Reactor Vessel Servicing Tools
Steamline Plugs and Installation Tools
Shroud Head Stud Wrenches
Head Holding Pedestals
Head Stud Rack
Dryer-Separator Strongback
Head Strongback/Carousel (including Stud Tensioners and Stud Runners)

IN-VESSEL SERVICING EQUIPMENT

Instrument Strongback
Control Rod Grapple
Control Rod Guide Tube Grapple
Fuel Support Grapple
Grid Guide
Control Rod Latch Tool
Instrument Handling Tool
Control Rod Guide Tube Seal
Incore Guide Tube Seals
Blade Guides
Fuel Bundle Sampler
Peripheral Orifice Grapple
Orifice Holder
Peripheral Fuel Support Plug Pool
Auxiliary Platform

REFUELING EQUIPMENT

Refueling Platform

STORAGE EQUIPMENT

Fuel Storage Racks
Channel Storage Racks
Control Rod Storage Racks
Defective Fuel Storage Containers
In-Vessel Racks
Defective Fuel Storage Racks
Control Rod Guide Tube Rack
Fuel Storage Racks

UNDER-REACTOR VESSEL SERVICING EQUIPMENT

Control Rod Drive Servicing Tools
CRD Hydraulic System Tools Water Seal Cap
Control Rod Drive Handling Equipment
Equipment Handling Platform
Thermal Sleeve Installation Tool
Incore Flange Seal Test Plug Key
Bender

TABLE 9.1-2
FUEL SERVICING EQUIPMENT

COMPONENT NO.	IDENTIFICATION	ESSENTIAL CLASSIFI-CATION	SAFETY CLASSIFI-CATION	QUALITY GROUP	SEISMIC CATEGORY
		(a)	(b)	(c)	(d)
1	Fuel Prep Machine	PE	3	E	I
2	New Fuel Inspection Stand	PE	3	E	I
3	Channel Bolt Wrench	NE	0	E	NA
4	Channel Handling Tool	NE	0	E	NA
5	Fuel Pool Sipper	NE	0	E	NA
6	General Purpose Grapple	PE	2	E	I
7	Jib Crane	PE	2	E	I
8	Fuel Handling Platform	PE	2	E	I
9	Channel Handling Boom	NE	0	E	NA

Table Notes

(a) NE - Nonessential
PE - Passive Essential
(b) 0 - Other
(c) B - ASME Code Section III Class-2
D - ANSI B31.1
E - Industrial Code Applies
I - Electrical Codes Apply
(d) NA - No Seismic Requirements
I - Class 1

TABLE 9.1-3
FUEL TRANSFER SYSTEM COMPONENTS

COMPONENT NO.	IDENTIFICATION	ESSENTIAL CLASSIFI-CATION	SAFETY CLASSIFI-CATION	QUALITY GROUP	SEISMIC CATEGORY
		(a)	(b)	(c)	(d)
1	Winch	NE	0	E	NA
2	Hydraulic Power Supply	NE	0	E	NA
3	Fluid Stop	NE	0	E	NA
4	Vent Pipe	NE	0	D	NA
5	Cable Enclosures	NE	0	D	NA
6	Top Horiz. Guide Arms	NE	0	E	NA
7	Upper Pool Upender	NE	0	E	NA
8	Trunnion Box	NE	0	D	NA
9	Hydraulic Cylinder	NE	0	E	NA
10	Upper Pool Framing	NE	0	E	NA
11	Sheave Box Cover	NE	0	D	NA
12	Hydraulic Cylinder	NE	0	E	NA
13	Fill Valve	NE	0	D	NA
14	Sheave Box	NE	0	D	NA
15	Sheave Pipe	NE	0	D	I
16	Hydraulic Cylinder	NE	0	E	NA
17	Manual Gate Valve	NE	0	D	I
18	Containment Isolation	PE	2	B	1

TABLE 9.1-3 (Cont'd)

COMPONENT NO.	IDENTIFICATION	ESSENTIAL CLASSIFI-CATION	SAFETY CLASSIFI-CATION	QUALITY GROUP	SEISMIC CATEGORY
		(a)	(b)	(c)	(d)
19	Containment Bellows	PE	2	B	I
20	Transfer Tube	NE	0	D	I
21	Hydraulic Power Supply	NE	0	E	NA
22	Midsupport	NE	0	D	I
23	Wire Rope (Cables)	NE	0	E	NA
24	Carriage	NE	0	E	NA
24A	Tilt Tube	NE	0	E	NA
24B	Follower	NE	0	E	NA
25	Gate Valve	NE	0	D	I
26	Bellows	NE	0	D	NA
27	Drain Valve	NE	0	D	NA
28	Horizontal Guide Arms	NE	0	E	NA
29	Valve Support Structure	NE	0	D	I
30	Lower Pool Framing	NE	0	E	NA
31	Lower Pool Upender	NE	0	E	NA
32	Pivot Arm Framing Control System	NE	0	E	NA

Table Notes

(a) NE - Nonessential
PE - Passive Essential

(b) 0 - Other

(c) B - ASME Code Section III Class-2
D - ANSI B31.1
E - Industrial Code Applies
I - Electrical Codes Apply

(d) NA - No Seismic Requirements
I - Class I

TABLE 9.1-4
REACTOR VESSEL SERVICING EQUIPMENT

COMPONENT NO.	IDENTIFICATION	ESSENTIAL CLASSIFI-CATION	SAFETY CLASSIFI-CATION	QUALITY GROUP	SEISMIC CATEGORY
		(a)	(b)	(c)	(d)
1	Reactor Vessel Service Tools	NE	0	E	NA
2	Steamline Plug	NE	0	E	NA
3	Shroud Head Stud Wrench	NE	0	E	NA
4	Head Holding Pedestal	PE	0	E	I
5	Head Stud Rack	NE	0	E	NA
6	Dryer and Separator Strongback	PE	0	E	NA
7	Head Strongback Carousel	PE	0	E	NA

Table Notes

(a) NE - Nonessential
PE - Passive Essential

(b) 0 - Other

(c) B - ASME Code Section III Class-2
D - ANSI B31.1
E - Industrial Code Applies.
I - Electrical Codes Apply

(d) NA - No Seismic Requirements

* Dynamic analysis methods for seismic loading are not applicable, as this equipment is supported by the reactor service crane. Lifting devices have been designed with a minimum safety factor of 5 and undergo proof testing.

TABLE 9.1-5
UNDER-REACTOR VESSEL SERVICING EQUIPMENT AND TOOLS

EQUIPMENT/TOOL		CLASSIFICATION	SAFETY CLASS	SEISMIC CATEGORY
1.	CRD Handling Equipment	Nonessential	“Other”	NA
2.	Equipment Handling Platform	Nonessential	“Other”	NA
3.	Water Seal Cap	Nonessential	“Other”	NA
4.	Thermal Sleeve Removal Tool	Nonessential	“Other”	NA
5.	Incore Flange Seal Test Plug	Nonessential	“Other”	NA
6.	Key Bender	Nonessential	“Other”	NA

Table Notes

NA - No Seismic Requirements

9.2 WATER SYSTEMS

9.2.1 Station Service Water Systems

9.2.1.1 Plant Service Water Systems

The service water system consists of two separate systems, the plant service water system (PSWS) and the shutdown service water system (SSWS), which is described in Subsection 9.2.1.2. The PSWS is not required to ensure safe shutdown of the plant. The PSWS is the source of cooling for station auxiliaries during normal station operation and shutdown.

9.2.1.1.1 Power Generation Design Bases

The PSWS provides the cooling water required by station auxiliary equipment during normal station operation. This system is also the source of supply to the three SSWS divisions during normal station operation and shutdown. The cooling water source for the PSWS is the Clinton lake with normal lake elevation of 690'. Extreme lake elevations range from 682.3' (100 year drought) to 697' (100 year flood). The most severe expected normal cooling water temperature is 90°F. The inter tie between each SSWS division and the PSWS is provided with a motor-operated isolation valve.

The PSWS is cross connected to the fire protection system which is discussed in Subsection 9.5.1. The PSWS will also supply raw water to the makeup demineralizer system which is discussed in Subsection 9.2.3, and to the circulating water system described in Subsection 10.4.5.

The PSWS pumps furnish water to the circulating water traveling screen wash system. The screen wash system keeps the circulating water traveling screens free of debris. Dechlorination of the screen wash discharge water, for National Pollution Discharge Elimination System (NPDES) Permit compliance, occurs in the circulating water screen house screen wash trench.

9.2.1.1.2 System Description

This system consists of PSWS pumps, strainers, piping, valves and instrumentation necessary to furnish water from Lake Clinton to station auxiliaries and return the water to the lake, as shown in Drawing M05-1056. The equipment served by the PSWS is shown in Table 9.2-1. Table 9.2-2 shows specific information on the PSWS components. The PSWS pumps are located in the circulating water screen house, which is described in Subsection 3.8.4.1.7. Water for this system is furnished by three vertical wet pit pumps. Each pump has a capacity of 22,000 gpm. Two of the three pumps are required for normal operation. One pump is normally on standby. There are two automatic backwash type strainers available to strain discharge water. These strainers are required for normal operation.

9.2.1.1.3 Safety Evaluation

The PSWS is the normal source of cooling water supply to the equipment served by the SSWS. If the PSWS becomes unavailable, source of supply is transferred automatically to the SSWS pumps.

Chlorination treatment of the PSWS to prevent organic fouling can occur via the PSWS pump suction injections located in the circulating water screen house. The designed chlorination

treatment capability provides for automatic, controlled injections of sodium hypochlorite. Dechlorination of the PSWS discharge water for National Pollution Discharge Elimination system (NPDES) Permit compliance can occur at the discharge flume after the PSWS water mixes with the circulating water system flow. The PSWS chlorination treatment capability and the total residual chlorine concentration in the discharge to the cooling lake (ultimate heat sink, flume outlet and circulating water screen house) are subject to the environmental discharge limitations of the NPDES Permit. Adequate allowances in the design of the piping system have been made such that corrosion of the piping will not be a problem.

The PSWS pumps are designed to operate from a low lake elevation of 671'6" above sea level to high lake elevation of 697 feet and to withstand anticipated environmental conditions.

The PSWS is not designed to meet Seismic Category I events. The entire system is Quality Group D as defined in Section 3.2.

The PSWS is designed to periodically accept liquid radioactive waste effluent and dilute this discharge. A flow element in the service water discharge to the lake indicates whether sufficient flow is available to suitably dilute the effluent. Additionally, a radiation monitor which is part of the radiation monitoring system described in Section 11.5 will indicate if discharges approach 10 CFR limits.

9.2.1.1.4 Tests and Inspections

Components of the plant service water system not normally in use are capable of being functionally tested. The PSWS pumps and strainers are proven to be operable by their performance during normal station operation and shutdown.

9.2.1.1.5 Instrumentation

Local temperature indicators are provided in the PSWS at inlet headers and downstream of most major service equipment to allow checking of system performance. Pressure indicators are provided on the discharge of pumps to allow checking of system pump performance.

Strainer discharge header pressure is indicated locally and in the main control room (MCR). Pressure switches are provided on the strainer discharge header to automatically start a standby pump on low pressure and to actuate an annunciator in the MCR on low-low pressure. Pump auto start will actuate an annunciator in the MCR.

Local inlet and outlet pressure indicators are provided on each strainer to allow checking of the strainers' performance. Differential pressure switches across each strainer automatically initiate backwash on high differential pressure and actuate an annunciator in the MCR on high-high differential pressure.

PSWS discharge flow to the seal well is measured and indicated on the liquid radwaste control panel for use in determining dilution flow available for radwaste effluent releases.

9.2.1.2 Shutdown Service Water System (SSWS)

9.2.1.2.1 Design Bases

9.2.1.2.1.1 Safety Design Bases

a. The SSWS is used to remove heat from equipment necessary to safely shutdown the plant and maintain a safe plant shutdown by rejecting this heat to the ultimate heat sink.

b. The SSWS is designed to prevent leakage of radioactive contaminants that may enter the system from the RHR heat exchangers during shutdown.

c. This system is capable of flooding the drywell and containment through use of the RHR piping, if required following a postulated loss-of-coolant accident.

d. The SSWS is designed to provide cooling following a postulated LOCA automatically with no operator action, assuming a single failure coincident with the loss-of-offsite power.

e. This system is designed to meet Seismic Category I requirements. Isolation is provided at system boundaries between seismic SSWS piping and non seismic PSWS piping. The SSWS is designed as a Quality Group C, except for the containment boundary which is Quality Group B system in accordance with the definitions in Section 3.2. The sample cooler of Standby Gas Treatment System (SGTS) Exhaust, associated small bore piping and components are not classified as Quality Group C. However that portion is designed to Quality Group C standards as mentioned in Table 3.2-1.

f. The system is protected from natural phenomena, missiles, the effects of pipe whip, jet impingement, and water spray damage from high and moderate energy line breaks.

9.2.1.2.1.2 Power Generation Design Bases

The SSWS does not operate during normal station operation and shutdown. During normal station operation and shutdown, the plant service water system supplies water to safety-related equipment through SSWS piping. The SSWS pumps automatically start upon receiving a signal indicating either a loss-of-coolant accident (LOCA), or a low pressure signal from the SSWS header which indicates a loss-of-offsite power (LOOP). The SSWS pump start then causes the isolation valves between the SSWS and PSWS to close.

9.2.1.2.2 System Description

The SSWS consists of pumps, strainers, piping, valves and instrumentation to provide water from the ultimate heat sink to station essential equipment and discharge back to the ultimate heat sink, as shown in Drawing M05-1052. The flow path for the SSWS cooling water is from the ultimate heat sink through the bar grills and traveling screens into the SSWS pump intake bay as shown in Drawing M01-1116. The equipment cooled and the heat loads cooled by the SSWS are listed in Table 9.2-3. Table 9.2-4 shows specific information on SSWS components.

In addition to the equipment listed in Table 9.2-3, the SSWS provides the required shutdown service water to the manual deluge systems of the SGTS, control room supply air filter packages, and the control room makeup air filter packages. Although the fuel pool cooling and

cleanup heat exchangers and pump motors are listed in Table 9.2-3, the normal source of supply is the component cooling water system described in Subsection 9.2.2. The SSWS assures that makeup will be available for the spent fuel storage pool. Finally, the shutdown service water system is capable of providing makeup water to the suppression pool, flooding the reactor vessel, the drywell or containment through RHR system piping.

Three motor-driven vertical wet pit pumps are provided. Pumps A and B each capable of supplying 16,500 gpm at 275 feet of total head of shutdown service water to Division I and II, respectively, of the system. Pump C is capable of supplying 1100 gpm at 175 feet of total head to Division III of the SSWS. Automatic backwash type strainers are provided in the discharge lines of each pump. Division I and II are crosstied with double isolation valves to provide added flexibility to the system.

The two potential paths for radioactive inleakage to the SSWS are the RHR heat exchangers and the Fuel Pool Cooling and Cleanup (FPCC) heat exchangers. Radiation monitors are located in the service water discharge from the RHR and FPCC heat exchangers. If a high radiation alarm from the heat exchangers occurs, the operator can isolate the heat exchanger by closing motor-operated isolation valves in the service water inlet and discharge. If this action is deemed necessary, the second RHR or FPCC heat exchanger can then be placed into operation. The process radiation monitoring system, described in Section 11.5, of which these monitors are part, will help to assure that any radioactivity released to the Ultimate Heat Sink (UHS) will not exceed allowable limits.

The SSWS component piping materials are carbon steel which is compatible with the water in the Ultimate Heat Sink (UHS). Piping corrosion allowances and allowances for heat exchanger fouling have been made.

When SSWS water is being supplied by the PSWS, the capability for chlorination treatment of the serviced SSWS piping and equipment can occur to prevent organic fouling. During chlorination treatment, sodium hypochlorite is injected via the PSWS pump suctions located in the circulating water screen house. A dechlorination system, which is located downstream of the SSWS process equipment, provides capability for injecting sodium bisulfite into the underground SSWS piping to react with any excess chlorine residuals. The SSWS chlorination treatment capability and the total residual chlorine concentration in the SSWS discharge return to the cooling lake (UHS) are subject to the environmental discharge limitations of the NPDES Permit. During the postulated seismic event and for the period immediately following the postulated seismic event, when the chlorination treatment capability might not be available, organic fouling is not considered a serious hazard. The postulated seismic or loss-of-offsite power (LOOP) events are the only events which could make the PSWS unavailable.

9.2.1.2.3 Safety Evaluation

The SSWS provides a reliable source of cooling water for station auxiliaries which are essential to safe shutdown of the station following a design-basis loss-of-coolant accident. The SSWS consists of three divisions which correspond to the three electrical safety divisions. Any two of these divisions operating together are adequate to assure safe shutdown of the station.

The three SSWS divisions are separated and protected to ensure that in any of the following events sufficient equipment remains operational to safely shutdown the station.

a. safe shutdown earthquake,

b. design-basis flood,

c. tornado,

d. flooding or steam release from equipment failure such as pipe or tank rupture,

e. pipe whip and jet forces resulting from pipe rupture,

f. missiles resulting from equipment failure,

g. fire,

h. LOCA, and

i. LOOP.

This system is also designed such that no single-failure of a component will compromise the ability of the system to safely shut down the station. A single-failure analysis is shown in Tables 9.2-5 and 9.2-6.

Portions of the SSWS are located in the circulating water screen house, the auxiliary building, the fuel building, the diesel generator building, the control building, and the containment. Except for the circulating water screen house (CWSH), all of these buildings are Seismic Category I structures. The cubicles for the SSWS pumps in the CWSH are Seismic Category I. The SSWS piping is then routed beneath the floor of the screen house to the wall of the screen house. The portion of the screen house below the floor through which the SSWS piping is routed is also Seismic Category I. Therefore, all the areas through which the SSWS is routed are Seismic Category I.

An analysis of postulated cracks in moderate energy systems such as the SSWS has been performed. These analyses are discussed in Subsection 3.6.2.1.3.

The SSWS pumps are capable of operating satisfactorily from the low lake elevation to the maximum flood elevation. The pump cubicles and all system piping are protected from tornado generated missiles and floods. A detailed discussion of flood protection is provided in Section 3.4.

The three SSWS pumps as well as all motor-operated valves can be powered from the diesel generators which provide emergency power when offsite power is lost. Each division of the SSWS is powered from its corresponding electrical division. The different electrical divisions are discussed in Section 8.3. Therefore, loss of one electrical division power supply will not affect the ability of the other two divisions to safely shut down the station.

The UHS is designed to assure an adequate supply of cooling water to safely shut down Clinton Power Station for 30 days. A detailed analysis of postaccident heat rejection and a description of the UHS is given in Subsection 9.2.5.

All portions of the SSWS are designed in accordance with Seismic Category I requirements; ASME Code Section III, Class 3, and those Non-ASME lines in the SX system have been

seismically evaluated. These subsystems contain both ASME class III and ANSI B31.1 piping and meet the requirements for seismic, and IEEE 85, 323, 344 and 381. All interties with piping other than ASME Section III Class are furnished with automatic isolation valves or normally closed isolation valves. The sample cooler of Standby Gas Treatment System (SGTS) Exhaust, associated small bore piping and components are not classified as Quality Group C. However that portion is designed to Quality Group C standards.

The SSWS is routed exclusively in Seismic Category I areas. In these areas, all non-Seismic Category I piping, ductwork, cable trays, and miscellaneous equipment are analyzed to assure that they will not collapse under seismic loading, or that the collapse will not adversely effect operation of the Seismic Category I SSW system during or after a seismic event.

9.2.1.2.4 Tests and Inspections

The SSWS is hydrostatically tested prior to start up. The system is designed to permit periodic tests and inspections of all components to assure the operability of the system. The system is designed to permit inservice inspection in accordance with the requirements of 10 CFR 50.55 (a) and ASME Code Section XI. Additional testing requirements are discussed in Chapter 14.

The tests and inspections include the following:

a. Pumps and Drive Motors

Each pump is started and run for sufficient time to assure proper operability in accordance with the requirements of Article IWP-3000, ASME Section XI. The operator records discharge pressures and measures for abnormal vibration in accordance with the requirements of Articles IWP-4000 and IWP-6000, ASME Section XI. Additionally, flow elements are provided in the discharge from each strainer which are used to verify proper pump flow.

b. Manual Valves

Once the proper position of manual valves in the SX system flow path is determined, they will not be operated. Each manual valve in the SX system flow path is locked in the proper position to assure that the system is in the proper configuration and maintaining proper flow.

c. Check Valves

Check valves associated with equipment necessary for safe shutdown are observed for proper operation when the entire system is tested.

d. Control Valves

Each control valve is operated through its complete range of movement.

e. Motor-Operated Containment Isolation Valves

Motor-operated containment isolation valves are tested to assure that they are capable of opening and closing by operating manual switches in the control room and observing valve position lights.

System design also permits functional tests to ensure operability of the entire system. These tests demonstrate the performance of the full operational sequence that brings the system into operation for reactor shutdown, loss of offsite electrical power and the postulated loss-of-coolant accidents under conditions as close to the design as practical.

In addition, periodic testing and inspection will be done on individual components supplied by the SSW system as a result of Generic Letter 89-13. Cooler performance under SX design basis conditions (DBA LOCA concurrent with loss of Clinton lake dam) was based on 95°F*. Flow rates below those given on the vendor drawings and in section 9.4 of the USAR (ie. original design) are acceptable based on the margins between cooler capacities and room loads.

9.2.1.2.5 Instrumentation

Adequate instrumentation is provided to control the SSWS and to monitor the system performance for detailed information, refer to Subsection 7.3.1.1.5.

9.2.2 Component Cooling Water System (CCWS) for Reactor Auxiliaries

9.2.2.1 Power Generation Design Bases

a. The component cooling water system (CCWS) is designed to cool auxiliary station equipment over the full range of normal reactor operation, normal shutdown and testing conditions. Where the CCWS cools essential equipment during normal operations, an intertie with the shutdown service water (SSWS) described in Subsection 9.2.1.2 is provided for accident or abnormal conditions.

b. The CCWS is designed to provide a closed cooling water loop between essential and nonessential systems which are potentially radioactive and the PSWS. This provides an additional barrier between the potentially contaminated systems and the cooling water discharged to the environment.

c. The CCWS contains demineralized water. The effects of corrosion and fouling of heat exchangers on system degradation were considered and adequate allowances made.

d. An intertie to the turbine building closed cooling water-system (TBCCWS) described in Subsection 9.2.7 is provided for increased reliability of the main condenser mechanical vacuum pumps. The CCWS assures that cooling water is available to the condenser vacuum pumps even if both Unit 1 and Unit 2 TBCCWS's are out of service.

9.2.2.2 System Description

The CCWS is a closed-loop system providing cooling to auxiliary equipment in the containment, the fuel building, the radwaste building, and the auxiliary building. The system consists of

---

* As specified in 9.2.1.2, the shutdown service water (SX) design basis inlet temperature is 95°F.

pumps, heat exchangers, water storage tank, piping, valves, and instrumentation as shown in Drawing M05-1032. Each of the three CCW pumps are 50% capacity while the two CCW heat exchangers are 60% capacity both based on maximum normal cooling requirements. The equipment cooled by the CCWS is listed in Table 9.2-7. Table 9.2-8 provides detailed information on CCWS components.

The CCWS heat exchangers reject heat from the CCWS to the plant service water system which is described in Subsection 9.2.1.1. The service water is passed through the tube side of the heat exchangers while the closed cooling water passes through the shell side.

Water level in the CCWS is maintained by a 20,000 gallon storage tank which is pressurized with nitrogen to approximately 10 psig. The tank assures pump net positive suction head and accommodates thermal expansion effects. A relief valve on the tank prevents overpressurization. The tank has an automatic makeup valve(with manual bypass) and an automatic drain valve. The automatic system has the potential of masking a leak in the CCWS system. Therefore, the tank level may be controlled by manual make up and manual draining of the tank if desired in lieu of automatic operation. Makeup water to the tank is provided by the Make-Up Condensate Storage system which is discussed in Subsection 9.2.3.

Downstream of the CCWS pumps, two cartridge filters and a demineralizer skid provide continuous treatment of a partial CCWS flow (150 gpm maximum). The demineralizer skid will maintain a CCWS quality of; chloride (ppb) <50, conductivity (mmho/cm) <3.0 (at 25°c). The flow through the skid is manual control and may be isolated from the CCWS system for resin replacement.

The CCW containment penetrations are provided with both inboard and outboard motor-operated isolation valves. The valves and connecting piping are designed in accordance with ASME Section III, Class 2 and Seismic Category I standards. This portion of the system is classified as Quality Group B as defined in Section 3.2.

The portion of the CCWS providing water to the reactor recirculation pump seals, the reactor recirculation motor bearings and the FPCC heat exchangers is classified as Quality Group C. The rest of the CCWS is classified as Quality Group D and is designed in accordance with the standards identified in Section 3.2. The system P&ID, Drawing M05-1032, identifies those portions of the system which are designated as Quality Group B or C and which portions are designated as Quality Group D.

The CCWS is intertied with the SSWS, described in Subsection 9.2.1.2, to assure cooling water to the fuel pool cooling and cleanup (FPCC) heat exchangers and pump motors if for any reason the CCWS is unavailable. The two FPCC heat exchangers and two pump motors are intertied to Division I and Division II of the SSWS to assure that adequate cooling will always be available to the fuel pool. The transfer from the CCWS to SSWS is manually initiated upon loss-of-offsite power or unavailability of the CCWS.

9.2.2.3 Safety Evaluation

The CCWS is not required to assure safe shutdown of the plant. The failure of this system does not compromise any safety-related system or component and does not prevent safe reactor shutdown. Loss of CCW to the reactor recirculation pumps during a postulated LOCA does not effect the ability of the plant to safely shut down.

The CCWS is intertied with the SSWS described in Subsection 9.2.1.2 to assure that cooling water is available to the fuel pool cooling and cleanup heat exchangers and pump motors under all modes of station operation and shutdown including the postaccident period.

The CCWS provides a barrier between systems that are potentially radioactive and the service water which is discharged to the environment. Radiation monitors, which are part of the radiation monitoring system discussed in Section 11.5, are located in the CCW return downstream of potential sources to indicate leakage of radioactive substances into the system.

The four motor-operated containment isolation valves which provide Shutdown Service Water cooling capability to the reactor recirculation pump seals and motor are locked closed with their power removed by locking the circuit breaker in the open position, and are now considered manually operated valves with no position indication in the main control room. The remaining portions of the CCWS which penetrate the containment are provided with motor-operated containment isolation valves which are automatically closed on a high drywell pressure, or a reactor pressure vessel low level 2 signal. These containment isolation methods satisfy General Design Criterion 57 (10 CFR 50 Appendix A).

9.2.2.4 Tests and Inspections

System piping which is classified as Quality Group B or C was hydrostatically pressure tested.

Pumps in the CCWS are proven operable by their use during normal station operation. Motor-operated isolation valves can be tested to assure that they are capable of opening and closing by operating switches in the main control room and observing position indication. The equipment listed in Tables 9.2-7 and 9.2-8 and the associated instrumentation are accessible for visual examination.

9.2.2.5 Instrumentation Applications

The CCW storage tank is equipped with level instrumentation for monitoring the tank level and interlocking the following equipment. The CCWS circulating pumps are shut off on low level and the tank inlet valve is closed on high level. This transmitter is also used to give high and low-low level alarms in the main control room.

The outlet header from the CCW heat exchangers is monitored for temperature and pressure. There is a pressure transmitter that is used for pressure indication and low pressure alarm in the main control room. A temperature switch is used for the high header temperature alarm in the main control room.

CCW flow and temperature from the outlet of the Reactor Recirculation pump seals and motor winding coolers are monitored in the main control room. The CCW temperature on the combined return header from the upper and lower bearing coolers of the RR pump motors is monitored in the MCR. The CCW flow on the return line of the upper and lower bearing cooler of the RR pump motor can be controlled locally.

9.2.3 Demineralized Water Makeup System

9.2.3.1 Design Basis

9.2.3.1.1 Safety Design Bases

The demineralized water makeup system (DWMS) performs no safety-related function.

9.2.3.1.2 Power Generation Design Bases

The pretreatment system is designed to treat the lake water for use as filtered water, potable water, and other auxiliary uses. The filtered water is used for cooling and/or lubrication requirements of circulating water and service water pumps, and back and surface wash requirements for filters. The design flow rate of the system is 380 gpm.

The mixed bed polisher system receives reverse osmosis permeate and further removes minerals and impurities. The system is designed to upgrade water quality to the degree required for demineralized makeup water. The final effluent from the system is discharged into the demineralized water storage tank from where it is distributed, for required station usage. The quality of the demineralized water is designed to be as follows:

Specific Conductivity at 25° C	≤ 0.15 micromhos/cm
Chlorides	≤ 0.05 ppm as $C1^-$
Silica	≤ 0.01 ppm as SiO
pH	6.5 to 7.5

(When specific conductivity is less than 1.0 micromho/cm, pH need not be measured.)

The makeup condensate storage system is designed to receive the final effluent from the demineralizer train, to store it in the makeup demineralized water storage tanks, and to distribute the stored water throughout the plant as required.

9.2.3.2 System Description

The treatment system of upflow filters, reverse osmosis units, mixed bed polishers, and filtered water transfer pumps are inside the Makeup Water Pump House (MWPH). The clearwell, potable water and filtered water storage tanks are outside, next to the MWPH. The demineralized water storage tank is outside, north of the Turbine Building. The schematic diagram of the systems is shown in Figure 9.2-4 and 9.2-5. The makeup demineralizer system (Figure 9.2-5) in the Radwaste Building (cation, weak and strong base anions, mixed bed, and recycle pumps), are not being used at this time. The makeup demineralizer system has been operationally replaced by the reverse osmosis units and mixed bed polisher system.

The pretreatment system process consists of upflow filtration, sand filtering, and storing of the water in the filtered water storage tank for use, and further treatment. Raw water from the service water pump discharge header is upflow filtered and discharged into the clearwell tank for a surge volume and retention period, if necessary. One upflow filter is normally sufficient to provide the required makeup flow rate for pretreatment. Sodium hypochlorite may be added to

the piping entering the upflow filters or the clearwell tank. Water is then pumped from the clearwell tank through the sand filters and into the filtered water storage tank. From the filtered water storage tank the water is distributed for uses noted in Subsection 9.2.3.1.2, and for additional treatment. Further treatment is provided by the Reverse Osmosis (RO) Units, which discharges to the potable water and RO permeate storage tank. The RO units remove ionic impurities (hardness) for blending with the filtered water to improve the quality of potable water. The treatment system major components and their design data are provided in Table 9.2-10.

The reverse osmosis system consists of two independent units for trains that are normally operated in series, call a two-pass system. The first train is designed to remove total dissolved solids in the water to less than 14 ppm. The second train accepts the permeate from the first, and further reduces the total dissolved solids to less than 2 ppm. The total dissolved solids removal across the two pass system is designed for 99% removal. Reverse osmosis is the removal of ionic, organic, and suspended impurities from water by means of membrane. Unlike a filter, the feedwater or solution is separated into two streams by collecting fluids from both sides of a pressurized membrane, under sufficient effective pressure, allows passage of purified water (permeate) while rejecting and concentrating dissolved and suspended solids (concentrate).

The mixed bed polisher system (demineralizer) receives reverse osmosis permeate and further removes minerals, impurities and total orgainic carbon. The system consists of two stages, lead and lag, which are operated in series by stage. Each stage consists of four bottles. Exhaustion of the mixed bed media is determined by conductivity readings in the effluent of each stage. Upon high conductivity in the lead stage, the lag stage is moved into the lead stage and new bottles are placed in the lag stage. Exhausted bottles are regenerated off site. The system is designed to upgrade water quality to the degree required for demineralized makeup water. Final effluent from the mixed bed polisher is discharged into the demineralized water storage tank where it is distributed for required station usage.

The makeup condensate storage system (MCSS) is shown in Figure 9.2-5. The MCSS consists of one aluminum demineralized water storage tank with a capacity of 400,000 gallons, two makeup condensate transfer pumps, and necessary piping, valves, and instrumentation. System component performance data are given in Table 9.2-9.

The MCSS provides makeup to cycled condensate storage tank and various other smaller storage tanks demineralized water to the generator stator cooling water system, turbine oil purifier, SLC system, chilled water system, hydraulic supply on the fuel transfer system, auxiliary steam electrode boilers, and general purpose hose stations located throughout the plant. One of the two makeup condensate transfer pumps runs continuously during normal plant operation. High flow requirements activate a low line pressure alarm at the main control board. The additional makeup condensate transfer pump is then started from the main control board as needed.

The design data for major components of the demineralized water makeup system is shown in the Table 9.2-10.

9.2.3.3 Safety Evaluation

The demineralized water makeup system is not required to perform or in anyway assist to perform any nuclear safety function, such as safe shutdown of the power station or to mitigate the consequences of a nuclear accident.

However, the system is designed to assure reliable operation over full range of normal power station operation.

The quality of the effluent from the demineralized train is continuously monitored for conductivity with devices which alarm on local control panels and annunciate in the main control room panels if abnormalities occur. The components of the piping system associated with the demineralized trains and the pipeline connecting, the effluent from the demineralizer trains with the demineralized water storage tank, are constructed of corrosion resistant materials to prevent contamination of the final effluent.

9.2.3.4 Tests and Inspections

Prior to hydrostatic testing of the reactor pressure vessels, the demineralized water makeup system was preoperationally tested to ensure system operability, reliability and integrity. During normal power station operation, portions of the system can be isolated for testing and inspection.

The demineralized water storage tank was tested in accordance with the guidelines of ANSI B96.1-1973.

A performance test was given to each makeup condensate transfer pump.

9.2.3.5 Instrumentation Application

Raw water flow into the pretreatment system from the service water header is controlled by a modulation level controller on the clearwell tank, provides low level interlock for the clearwell transfer pumps and the tank immersion heaters.

The turbidity of the water leaving the upflow filters is measured by meters at each filter. The turbidity may be read locally, and at the operator interface computer. Turbidity is recorded on the operator interface computer.

The sand filters are provided with local inlet and outlet pressure indicators, and with differential pressure transmitter that show filter differential on local control panels. The filter surface wash and backwash pumps have local pressure indicators on the discharge lines. The flow from these pumps is measured by flow elements in the supply lines and read at the operator interface computer.

The filtered water storage tank has level switches that provide interlocks to trip the tank heaters, filtered water transfer pumps, the sand filter backwash pumps, and the filtered water system pumps on low level. The tank heaters are also interlocked with temperature switches mounted in the tank to trip on high temperature. Filtered water transfer pumps have local pressure indication on the discharge lines. The filtered water storage tank level is also used to determine the number of upflow filters in service. During high demand the standby upflow filter is automatically started, and shutdown once level is restored, as directed by the operator interface computer.

The mixed bed polisher is provided with a local inlet pressure indicator. Polisher flow, and the inter stage and final conductivity is measured, and recorded on the operator interface computer. High conductivity at either location will result in an alarm, and stop the discharge to the makeup condensate storage tank.

The makeup condensate storage tank is equipped with level switches and a level transmitter which provides high and low level alarm and continuous indication, both locally at the makeup demineralizer and in the main control room. The water level in the makeup condensate storage tanks is controlled manually from local makeup demineralizer control panel. A handswitch energizes the solenoid which opens the fill valve. The valve may then be manually closed after the tank is filled to the desired level. Should the filling operation be left unattended, a high-high level switch is interlocked to the fill valve and automatically shuts the valve when this level is reached.

The makeup condensate transfer pumps are operated by handswitches located in the main control room. The common pump discharge header is equipped with a pressure transmitter, which provides a low pressure alarm and continuous indication in the main control room.

Each pump discharge pressure is indicated on local panels. During normal operation, one makeup condensate transfer pump is sufficient to meet system demands. When the system is used for filling the cycled condensate storage tanks, or for providing miscellaneous system demands, it may be desirable to operate both makeup condensate transfer pumps. By monitoring the distribution header pressure in the main control room, the operator can determine when high system demand has subsided and a pump can be secured. To protect the pump(s) from cavitation damage, they are tripped when the storage tank drops to the low level.

The makeup condensate storage tank level and header pressure indications are transmitted to the plant computer for display and logging purposes.

Upon receiving a containment isolation signal from the NSSS or high drywell pressure or low reactor pressure vessel water level (level 2), the inboard and outboard containment isolation valves automatically close.

9.2.4 Potable and Sanitary Water Systems

9.2.4.1 Design Bases

9.2.4.1.1 Safety Design Bases

The potable and sanitary systems are not required for safe shutdown of the plant. Therefore, they have no safety design bases.

9.2.4.1.2 Power Generation Design Bases

The potable water and sanitary systems are not required for power generation; however, the following bases were utilized in the design of the systems.

a. The potable water system is designed to produce and maintain the quality of water required to meet drinking water standards.

b. The sanitary waste water treatment system is designed to meet the effluent quality limits set by the Illinois Environmental Protection Agency.

c. The potable and sanitary water systems are designed so there are no connections to systems that have a potential for containing radioactive materials.

9.2.4.2 System Description

The potable and sanitary water systems are supplied with lake water that is treated and chlorinated. The potable and sanitary water systems do not connect to any system that might discharge radioactive materials. Sewage treatment is provided by primary and secondary aerated lagoon cells. The effluent of the lagoon is normally treated by sand filtration, for Total Suspended Solids (TSS) reduction. Sewage treatment effluent is released to the circulating water discharge flume.

9.2.4.3 Safety Evaluation

The potable and sanitary systems have no safety-related functions. Failure of the system does not compromise any safety-related equipment or component and does not prevent safe shutdown of the plant.

9.2.4.4 Testing and Inspection

The potable and sanitary water systems are proved operable and tested by their use during normal operations. The portions of each system normally closed to flow are tested by opening these portions to flow, to check their operability.

9.2.5 Ultimate Heat Sink

9.2.5.1 Design Bases

The ultimate heat sink (UHS) provides sufficient water volume and cooling capability to safely shutdown the plant and maintain the plant in a shutdown condition for 30 days with no water makeup.

The UHS can provide a minimum of 900,000 gallons of water for fire protection requirements if required with no reduction in cooling capability. Makeup for this fire protection water is from the cooling lake under normal operating conditions.

The UHS is capable of withstanding the most severe natural phenomenon

The UHS is capable of withstanding postulated site-related incidents.

9.2.5.2 System Description

The Clinton Power Station cooling lake (Lake Clinton) provides cooling water for the station's circulating water and service water systems. Circulating water and service water are taken at the circulating water screen house, passed through the station, and recirculated back to the lake. During normal station operation when water is being recirculated back to the lake, the lake's aproximately 3650 acres of effective surface area dissipate heat resulting from station operation. Therefore, reliance is placed on the lake for station operation.

This cooling lake is formed by an earthfill dam on Salt Creek approximately 1200 feet downstream from the confluence of Salt Creek and the North Fork of Salt Creek. At normal pool elevation (elevation 690 feet), the lake has 4895 acres of surface area and stores 74,200 acre-feet of water.

Since the station's normal operation is dependent upon the lake, extreme meteorological and hydrological events (including tornadoes and the entire spectrum of flooding conditions) were considered in the lake design to ensure its reliability during subjection to these adverse events. Tornadoes do not have adverse influence on the cooling lake's integrity; so they dictate no special design features except that the main dam embankment is designed for wave action.

Subsection 2.4.8.1 discusses the design of the dam, to accommodate wave action as well as the features designed to protect the dam from the 100-year flood and the probable maximum flood.

Earthquake loads are considered in the design of the main dam embankment, but sole reliability is not placed on the main dam in the design for the postulated safe shutdown earthquake event. Rather, a submerged ultimate heat sink located in the cooling lake's bottom provides redundant reliability to ensure a shutdown heat sink. Availability of water at the intakes to the shutdown service water pumps is provided by the location of the UHS adjacent to the circulating water screen house, portions of which are Seismic Category I. This circulating water screen house has two separate inlets, each capable of providing water to the shutdown service water pumps as shown in Drawing M01-1116.

Subsection 2.4.8.1 discusses the construction of the UHS and includes a discussion of the materials involved. Figures 2.4-23 and 2.4-24 shows the location of the UHS in the lake and sections through the UHS.

The ultimate heat sink has a surface area of approximately 158 acres and a depth of 6.5 feet of water below the design water surface elevation of 675 feet. This provides for a gross capacity of 1067 acre-feet to maintain the inlet temperature to the plant below the 95° design.

Water is taken from the ultimate heat sink by the shutdown service water pumps. The water is pumped through the station auxiliaries and returned through piping to the ultimate heat sink.

The materials used to construct the UHS dam and the foundation materials have low permeability as described in Subsection 2.5.6.6.1. The calculated loss of water from the sink due to seepage through the submerged dam and its foundation is 0.003 cfs. This value is considerably smaller than the seepage rate used in the original sizing analysis of the UHS. Design considerations, including slope stability and other criteria are presented in Subsections 2.5.5.2 and 2.5.6. The UHS becoming unavailable to provide a source of emergency cooling water is not credible.

The protection of the submerged UHS dam from the effects of a probable maximum flood, coincident with 100 years drought or the postulated breach of the main dam is discussed in Subsection 2.4.8.1.

The 100-year recurrence interval drought as discussed in Subsection 2.4.11 will lower the lake level to a minimum elevation of 682.3 feet. This is considerably above the level of the submerged UHS at 675 feet. Therefore, the 100-year design basis drought will not effect the capability of UHS to provide emergency cooling water.

Reliability of the UHS to provide a supply of water during drought conditions is further enhanced by the UHS location with respect to the adjacent groundwater table. Since the UHS is normally submerged in the cooling lake and the normal pool elevation sets the base level for the adjacent

groundwater during low flow or loss of the main dam, water stored in the upstream alluviums would replenish water in the UHS.

A study of sedimentation potential in the lake has been made. The sizing of the ultimate heat sink includes allowances for sedimentation. Subsection 2.4.11.6 provides a more detailed description on the effects of sedimentations.

9.2.5.3 Safety Evaluation

The UHS is designed to supply water to the shutdown service water pumps at controlled temperatures. The water supply will provide cooling to remove heat from all necessary nuclear safety-related equipment required to maintain the station in a safe condition during all modes of operation of the units, including postulated accidents.

Reliance is placed upon redundant measures provided in the UHS system design. Under normal lake operation conditions, the lake provides the ultimate heat sink. The lake is designed for adverse hydrological and meteorological conditions. The submerged ultimate heat sink provides a redundant water supply design to satisfy all Seismic Category I requirements.

The station heat rejected to the UHS can be divided into two parts - heat rejected by RHR exchangers and by auxiliary systems. The RHR heat exchangers require a separate analysis as given in the following paragraphs.

The following evaluation is based upon the original concept of two units for the Clinton Power Station. The second unit has been canceled.

RHR Exchanger Heat Rejection Rate to UHS under LOCA and LOOP

The mode of operation of RHR exchanger will be the same under LOCA or LOOP when Unit 1 is under LOCA and Unit 2 under LOOP. So, the following analysis applies to both units - Unit 1 under LOCA and Unit 2 under LOOP.

The following analytical model, is used to evaluate the heat load on the RHR exchangers:

$$\frac{d}{dt}(T_s) = \frac{q_D + q_E - q_{HX}}{MW_s} \qquad (9.2\text{-}1)$$

where:

Ts	=	temperature of the suppression pool, °F
t	=	time, hour
q_D	=	core decay heat rate, Btu/hr
q_E	=	rate of primary system energy release, Btu/hr
q_{HX}	=	heat removal rate by RHR exchangers, Btu/hr
MW_s	=	mass of water in the suppression pool, lb

The RHR exchangers are put into operation 1/2 hour after a LOCA. By then, blowdown energy is completely absorbed by suppression pool and containment and hence, the blowdown energy rate need not be considered.

At any given time, the heat removal rate by the RHR exchangers can be calculated from the energy balance.

The following information was taken from ANS-5.1-1979 (ANS Standard-Decay Energy Release Rates Following Shutdown of Uranium-Fueled Thermal Reactors):

a. The fission product decay heat: This was given in the form of fraction of operating power. A conservatism corresponding to a two-sigma uncertainty has been added to the energy released by the fission products to cover the uncertainty in their nuclear properties. The maximum operating power of 3543 MWt for one unit is based on the rated operating power of 3473 MWt plus 2% instrument error allowance.

b. The heavy element (capture) decay heat: This was also obtained from the methods outlined in ANS-5.1. Allowances have been provided for U^{239} and Np^{239} which are explicitly accounted for in the ANS 5.1-1979 standard, for miscellaneous additional actinides, and for structural activation products. The decay heat rates were based on maximum operating power of 3543 MWt. These decay heat rates have been included in the Total Core Decay Heat values.

The net heat removal rate from the suppression pool can be calculated based on the amount of heat being removed by RHR heat exchangers and the amount of heat being added in the form of decay heat, sensible heat and pump heat. However, the RHR heat exchangers heat removal rate is a function of suppression pool temperature, surface area of the heat exchanger, overall heat transfer coefficient, service water inlet temperature, and the flow rates. From the known physical and performance parameters of the RHR heat exchanger and service water system, equation 9.2-1 may be solved.

An effective lumped value of the overall heat transfer rate ($U_O A_{HX}$) based on the RHR heat exchanger performance was used in this analysis. This value of U_O A_{HX} is based on one RHR loop operating after LOCA. A maximum service water temperature of 95° F was considered for this study (as a constant value) throughout 30 days after LOCA. This is conservative since Table 9.2-14 shows the maximum intake temperature to the plant is 92.4°F*.

The suppression pool temperature (T_s) and the heat load on the RHR heat exchangers (q_{HX}) at any time can be determined by trial and error. Knowing the initial values, the RHR exchangers heat load can be calculated at the end of the time interval. RHR heat exchangers are put into operation at 1/2 hour after a LOCA and the suppression pool temperature (T_s) at 1/2 hour was obtained from Figure 6.2-8. The RHR heat exchangers heat load for 30 days is shown in Table 9.2-11.

---

* As specified in 9.2.1.2, the shutdown service water (SX) design basis inlet temperature is 95°F.

Auxiliary Heat Rejection Rate to the UHS Under LOCA and LOOP

The heat rejection rates by auxiliary system are shown in Table 9.2-3 for Unit 1 under LOCA.

Total Heat Rejection Rate to the UHS

Table 9.2-11 and Figure 9.2-6 show the total heat rejection rates to the UHS for one 1138.5 MWe unit under LOCA or LOOP condition.

The heat rejection rates for Unit 1 under LOCA or LOOP are given in tabular form in Table 9.2-13 and in graphical form in Figure 9.2-7.

All of the shutdown service water pumps are capable of operating at a low water level of 671.5 feet which is below the water level of the UHS after 60 days as shown in Table 9.2-15.

The result of the analysis that demonstrates the capability of the UHS to provide (1) adequate water inventory assuming conservative weather conditions and (2) sufficient heat dissipation to limit service water operating temperatures within the designed values is presented in Tables 9.2-14 and 9.2-15. Table 9.2-14 shows the predicted thermal parameters of the UHS at the station intake and discharge points, along with the natural temperatures of the UHS. The UHS will not exceed the maximum shutdown service water system inlet temperature, nor fall below the satisfactory operation level of the pump for well past 30 days, as shown by Table 9.2-15. The analysis has been made for a period of 60 days to assure that the heat sink will continue to operate adequately beyond the required 30-day period.

The UHS serves Unit 1 and has adequate surface area and capacity to dissipate the heat rejected from the two units under the following environmental conditions.

a. This analysis does not select two separate periods for analysis as required in Regulatory Guide 1.27. Instead of selecting one period for analyzing evaporative losses and one period for determining maximum station inlet temperature, a single 60-day period comprised of the 60 days with the worst parameters for heat transfer from the lake was used.

b. The environmental conditions postulated for the period of analysis were based on transient heat dissipation studies made on the Lake Clinton cooling lake incorporating the available weather data for the years 1949 through 1971 inclusive. The period selected was the one that was considered to be the most severe from a climatological standpoint based on actual computer analysis of the cooling lake which predicted transient lake temperature for the years 1949 through 1971.

c. Due to the complexity of the heat dissipation process itself and the consideration of so many varied parameters in selecting a critical weather period for analyzing LOCA, the period selected was the one which showed (1) the maximum temperature occurring at the station intake in 23 years of normal heat rejection to the cooling lake and (2) high evaporative losses resulting from the cooling lake due to the heat rejected.

The analysis period chosen provides the worst case for heat to be transferred from the UHS based on the recorded weather data. The interaction of a large number of parameters have

been considered as required by Regulatory Guide 1.27. Since both evaporative conditions, and intake temperatures were considered throughout the entire analysis period, this analysis is actually more conservative than the analysis required by Regulatory Guide 1.27.

Makeup water and seepage losses were not considered while analyzing the UHS under postulated LOCA. The anticipated temperatures of the UHS as a function of time are shown in Figures 9.2-9 and 9.2-10. Figure 9.2-9 shows the anticipated temperatures of the UHS at the station intake, discharge and UHS midpoint during the heat dissipation process under LOCA. Figure 9.2-10 shows the lake natural temperatures occurring during the period of the postulated LOCA.

This analysis was based on preliminary UHS data. The analysis was based on a total UHS surface area of 148 acres, and a volume of 915 acre-feet. The UHS as constructed has a surface area of 158 acres and a volume of 1067 acre-feet. This increases the conservatism of the analysis. Additionally, the auxiliary heat loads used for the analysis (90.65 x 10^6 Btu/hr) is higher than the actual tabulated auxiliary heat load shown in Table 9.2-3 (approximately 89.2 x 10^6 Btu/hr).

The cooling lake, in combination with the submerged pond, provide an ultimate heat sink in accordance with the requirements of Regulatory Guide 1.27. The ultimate heat sink is capable as shown by the analysis of providing sufficient cooling for more than 60 days to shutdown and cooldown both units following the design-basis accident.

9.2.5.4 Testing and Inspection

A sedimentation monitoring program is implemented to ensure that sediment deposition does not infringe upon the required storage capacity in the submerged pond.

9.2.5.5 Instrumentation Application

Instrumentation is not necessary for the ultimate heat sink.

9.2.6 Condensate Storage Facilities

9.2.6.1 Design Bases

9.2.6.1.1 Safety Design Bases

The condensate storage facilities (CSF) provide water to nuclear safety-related systems, but they perform no safety-related function themselves. Any connections between the condensate storage facilities and nuclear safety-related systems are isolated by a Seismic Category I valve. Only those portions of the CSF that penetrate the containment and drywell walls are of Seismic Category I design. These penetrations are equipped with sufficient isolation valves to satisfy single-failure criteria. Containment isolation is discussed in Section 6.2.4.

9.2.6.1.2 Power Generation Design Bases

a. The CSF is designed to supply water to the Fuel Pool Cooling & Cleanup Surge Tanks, to provide makeup to the fuel pool for refueling and fuel shipping cask loading operations

b. The CSF is designed to pump and store condensate for the reactor core isolation cooling system (RCIC) and high pressure core spray system (HPCS).

c. The CSF is designed to maintain the level of condensate in the condenser hotwell, and provide condensate to other plant systems, where required.

9.2.6.2 System Description

The CSF is shown in Drawing M05-1012. The CSF consists of an aluminum cycled condensate storage tank with a capacity of 400,000 gallons, one aluminum RCIC storage tank with a capacity of 125,000 gallons, three cycled condensate transfer pumps, and necessary piping, valves and instrumentation. System component performance data are given in Table 9.2-16. Radioisotope inventory for the cycled condensate storage tank is provided in Table 12.2-8. Activity in the RCIC storage tank is expected to be similar.

The RCIC storage tank provides water to the HPCS and RCIC pumps for normal operation and testing. The suppression pool provides water for the HPCS and RCIC pumps, if water from the RCIC storage tank is unavailable. The RCIC system is discussed in Section 5.4.6 and the HPCS system is discussed in Section 6.3. The CSF provides water to the fuel pool cooling and cleanup system, suppression pool, liquid radwaste system, reactor water cleanup system, control rod drive hydraulic system, auxiliary steam system, various storage tanks, utility equipment, and general purpose hose stations located throughout the plant. Makeup to the cycled condensate storage tank is provided by the demineralized water tank and the liquid radwaste system effluent. Makeup to the RCIC storage tank is provided from the cycled condensate storage tank. One of the three cycled condensate transfer pumps runs continuously during normal plant operation. All three cycled condensate pumps operate during the filling of the upper containment fuel pool during refueling. Two cycled condensate pumps are required to supply water to the upper containment fuel pools while the third maintains pressure in the balance of the system. High use requirements will cause low discharge header pressure which will activate a low line pressure alarm at the main control board. Additional cycled condensate transfer pumps are then started from the main control board as needed. Cleanup of the suppression pool is handled by the suppression pool cleanup system discussed in Subsection 9.3.6. Cleanup of the upper pool is handled by the fuel pool cooling and cleanup system discussed in Subsection 9.1.3.

9.2.6.3 Safety Evaluation

The system has no nuclear safety-related function, except for the piping and valves which form the containment isolation boundary. Failure of the system, with this exception, does not compromise any nuclear safety-related system or component and does not prevent safe shutdown of the reactor.

To prevent an uncontrolled release of the contents of the cycled condensate storage tank or the RCIC storage tank, the tanks are located within retaining basins. The walls of the retaining basins are either earthen dikes, or a combination of concrete walls and earthen dikes.

9.2.6.4 Tests and Inspections

During the construction and preoperational testing phase, the cycled condensate storage tank and RCIC tank were tested in accordance with the requirements of ANSI Standard B96.1-1973. During this time period, a performance test was given to each cycled condensate transfer pump.

9.2.6.5 Instrumentation Application

The cycled condensate storage tank is equipped with a level switch and a level transmitter which provide high, low, and lo-lo level alarms and level indication in the main control room. The water level in the cycled condensate storage tank is controlled manually from the main control room. A handswitch, located on the main control board, energizes the solenoid which opens the valve to the makeup condensate system which fills the tank. The level switch activates a high level alarm in the main control room prior to the tank is overflowing. By operating a handswitch located on the main control board, a valve can be opened which does discharge excess condensate to the radwaste sample tanks, decreasing the level of water in the storage tank.

The cycled condensate transfer pumps are operated by handswitches located in the main control room. The common pump discharge header is equipped with a pressure transmitter which provides a low pressure alarm and continuous indication in the main control room. Each pump discharge pressure is indicated by pressure gauges mounted on a local panel. By monitoring the distribution header pressure in the main control room, the operator can determine when system flow requirements exceed the operating pump capacity, and an additional pump (or pumps) is required to increase line pressure or when high system demand has subsided and a pump can be secured.

The tank level and header pressure indications are transmitted to the plant computer for display and logging purposes.

Upon receiving a containment isolation signal from the NSSS on high drywell pressure or low reactor pressure vessel water level (level 2), the containment isolation valves automatically close. The drywell isolation valves are locked closed with the power removed by locking the circuit breaker in the open position, and are considered manually operated valves with no position indication in the main control room.

9.2.7 Turbine Building Closed Cooling Water System

9.2.7.1 Power Generation Design Bases

a. The turbine building closed cooling water (TBCCW) system provides cooling water to station auxiliary equipment associated with the power conversion systems in the turbine and radwaste buildings over the full range of normal station operation and shutdown.

b. The TBCCWS uses demineralized water which is treated by a chemical inhibitor system to minimize long-term corrosion effects and fouling of heat exchangers which may degrade system performance.

c. To provide added dependability for the condenser vacuum pumps, an intertie to the CCWS described in Subsection 9.2.2 is provided.

d. The design of piping and valves for the TBCCWS is in accordance with ANSI B31.1. Miscellaneous equipment conforms to the applicable codes and standards of TEMA, NEMA, and ASME Section VIII.

9.2.7.2 System Description

The TBCCWS is a closed loop system providing cooling water to auxiliary equipment in the turbine building. The system consists of pumps, heat exchangers, a water storage tank, piping, valves and instrumentation as shown in Drawing M05-1057. Each pump is capable of handling full flow based on maximum normal cooling requirements. The equipment cooled by the TBCCWS is listed in Table 9.2-17. Detailed information on TBCCWS components is provided in Table 9.2-18.

The TBCCW heat exchangers reject heat from the TBCCWS to the plant service water system which is described in Subsection 9.2.1.1. The service water is passed through the tube side of the heat exchanger while the turbine building closed cooling water passes through the shell side.

Water level in the TBCCWS is maintained by an atmospheric storage tank. The tank assures pump net positive suction head and accommodates thermal expansion effects. Makeup water to the tank is provided by the makeup condensate storage system which is discussed in Subsection 9.2.3.

An intertie to the CCWS discussed in Subsection 9.2.2 is provided to assure reliable operation of the condenser vacuum pumps.

9.2.7.3 Safety Evaluation

The TBCCWS has no nuclear safety-related function. Failure of the system does not compromise any safety-related system or component and does not prevent safe reactor shutdown.

9.2.7.4 Tests and Inspections

The TBCCWS pumps and heat exchangers are proven operable by their use during normal station operation. Routine inspection of the components, instruments, and alarms will be adequate to verify proper operation of the system.

9.2.7.5 Instrumentation Applications

The TBCCW storage tank is equipped with level instrumentation for monitoring the tank level and interlocking the following equipment. The TBCCW circulating pumps are shutoff on low-low-low level and the tank makeup valve is opened on low level. This transmitter is also used to give high and low-low level alarms in the main control room.

The outlet header from the TBCCW pumps is piped to the TBCCW heat exchangers and monitored by locally mounted temperature indicators on the inlet and outlet. The outlet header from the TBCCW heat exchangers is monitored for temperature and pressure. There is a pressure transmitter that is used for pressure indication and low pressure alarm in the main control room. A temperature element sends for a signal to a temperature controller which controls a valve that modulates the flow of plant service water through the TBCCW heat exchangers.

The amount of cooling water going through the electrohydraulic control (EHC) fluid coolers is controlled by a modulating valve, controlled by a temperature controller. This controller receives a signal from a temperature element in the hydraulic fluid unit.

The larger heat exchangers that use TBCCW can be monitored by locally mounted temperature indicators on the TBCCW outlet headers.

9.2.8 Chilled Water Systems

9.2.8.1 Control Room Chilled Water System

This system provides chilled water to the control room HVAC system and the control room HVAC equipment chilled water coils, during normal and abnormal plant operating conditions.

9.2.8.1.1 Design Bases

9.2.8.1.1.1 Safety Design Bases

a. The control room chilled water system is a Safety Class 3 system. The components of the system are designed in accordance with applicable ASME Codes and IEEE Standards.

b. Classification of the components of this system is shown in Section 3.2. Safety related portions of this system are protected from tornadoes, missiles, pipe whip, and flooding.

c. The condensers of the refrigeration units are normally cooled by plant service water. During loss of offsite power or loss-of-coolant accident conditions, they are cooled by shutdown service water. For further details, refer to Subsections 9.2.1.1 and 9.2.1.2 for the Plant Service Water and the Shutdown Service Water Systems, respectively.

d. Two 100% capacity equipment trains are provided to meet the single failure criteria.

e. The electrical equipment in each train is powered from independent Class 1E electrical buses.

9.2.8.1.1.2 Power Generation Design Bases

a. The system cooling capacity is based on cooling the control room HVAC system supply air to dissipate the heat generated from all the equipment contained within the control room envelope.

b. Two full-capacity redundant chilled water circuits are provided to meet the power generation objectives.

9.2.8.1.2 System Description

The schematic design of the control room chilled water system is shown in Drawing M05-1102. Nominal size and type of principal components are listed in Table 9.2-19.

a. The system is designed to provide a sufficient quantity of chilled water to the control room HVAC system and the control room HVAC equipment room chilled water coils at approximately 42°F water temperature from the refrigeration unit and a maximum of 10° ΔT across the refrigeration unit. Refrigerant R-114 is used in the control room refrigeration unit.

   For further discussion of the control room HVAC system refer to Section 6.4 and Subsection 9.4.1.

b. The control room refrigeration units are located on elevation 825 feet 0 inch of the control building.

c. The control room chilled water system consists of two full-capacity independent subsystems. Each subsystem consists of a chilled water pump, one refrigeration unit, chilled water coils, one chilled water compression tank and associated piping, valves and instrumentation.

d. The evaporator tubes and the condenser tubes of the refrigeration unit are designed to include an allowance for tube fouling of 0.0005 (hr ft^2°F/Btu) and 0.002 (hr ft^2°F/Btu) respectively.

e. Components of the system are designed in accordance with the Seismic Category I and Class 1E requirements.

f. Each refrigeration unit is housed along with its corresponding air-handling equipment and physically separated from the other refrigeration unit and airhandling equipment by a concrete missile wall.

g. The control room chilled water system is controlled to maintain a constant supply water temperature and works in conjunction with the control room HVAC system to meet the cooling requirements.

h. <u>Instrumentation and Controls</u>

   1. The chilled water pump for each train may be either manually started from the local control panel (provided the train remote/local selector switch is in the local position and the associated supply air fan is running), or may be manually started from the main control room using the associated supply air fan control switch (provided the train remote/local selector switch is in the remote position).

   2. Each chiller must be manually started from the chiller control panel.

   3. Each chiller is interlocked with a flow switch provided in the chilled water line.

   4. Each chiller is provided with trips/alarms to protect the equipment from damage due to abnormal operating conditions.

   5. Low service water pressure, low chiller pump flow, and high temperature in the chiller/pump equipment room are annunciated on the local control

board, resulting in a common trouble alarm on the main control board. Each chiller is provided with necessary controls to maintain the design leaving-water temperature.

6. All instruments and controls for the control room chilled water system are electric or electronic, except for the modulating valves controlling the control room HVAC equipment room cooling water. These valves are air operated, and fail open to provide cooling upon loss of air.

9.2.8.1.3 Safety Evaluation

a. The control room chilled water system is a Safety Class 3 system.

b. Loss of one control room chilled water system does not affect the safe shutdown capability of the station, as a redundant control room chilled water system is provided.

c. A system failure analysis is presented in Table 9.4-2.

d. Refer to Section 3.2 for further classification of structures, systems and components.

9.2.8.1.4 Testing and Inspection

a. Equipment is factory inspected and tested in accordance with the applicable equipment specifications and codes. Preoperational tests are performed on mechanical components of the system. The system is balanced for design water flow rates and operating pressures. System piping and equipment erection are inspected during various construction stages. Controls, interlocks, and safety devices are checked, adjusted, and tested to ensure system operation.

b. The refrigeration units' suction and condensing pressures, as well as the compressors' lubricant pressure are periodically monitored to ensure that normally operating equipment is functioning properly.

9.2.8.2 Drywell Chilled Water System

This system provides chilled water to four drywell cooling system fan-coil units and two supplemental fan coil units to meet the cooling load requirements. Although the drywell chilled water system is not safety-related, it can be operated upon loss of offsite electric power.

9.2.8.2.1 Design Bases

9.2.8.2.1.1 Safety Design Bases

The drywell chilled water system is not safety-related; therefore, it has no safety design bases.

The chilled water supply and return piping penetrations through the primary containment and drywell boundaries are equipped with redundant motor-operated isolation valves to ensure primary containment isolation. The isolation valves are powered from Class 1E buses and meet

the single failure criteria. This part of the system is designed to be Seismic Category I. The isolation valves and piping between them are Safety Class 2.

The chilled water piping components within the drywell are supported in accordance with Seismic Category I criteria to preclude damage to the safety-related system during a safe shutdown earthquake.

9.2.8.2.1.2 Power Generation Design Bases

a. The drywell chilled water system is not required to operate during station abnormal (except during loss of offsite power) operating conditions.

b. Pressure relief valves are provided in the piping between the two isolation valves to relieve hydrostatic pressure due to water expansion within the cooling coils and piping subsequent to system isolation post-LOCA.

c. The system cooling capacity is based on heat losses from piping and valves, equipment, the reactor pressure vessel, and unidentified steam leakages. The chilled water leaving and entering the system is at approximately 45° F and 55° F respectively.

d. Two full-capacity redundant chilled water circuits are provided for the drywell to meet the power generation objectives.

e. The design of the system permits periodic inspection and testing of principal system components.

f. The power supply to the refrigeration units are transferred automatically (except during LOCA) to the standby diesel generators if normal electric power is not available.

g. Plant service water is used for the condensers of the refrigerating units during normal operation. On loss of offsite electric power, the shutdown service water pumps will automatically start, the isolation valves between plant service water and shutdown service water then close, and cooling water to the chiller condensers is provided by the shutdown service water system. For further details of the Plant Service Water and Shutdown Service Water Systems, refer to Subsections 9.2.1.1 and 9.2.1.2, respectively.

h. The chilled water pumps are transferred automatically (except during LOCA) to the standby diesel generators if normal electric power is not available.

9.2.8.2.2 System Description

a. The schematic diagram of the drywell chilled water system for Unit 1 is shown in Drawing M05-1109. Nominal sizes and types of principal system components are listed in Table 9.2-20.

b. The system is designed to provide an adequate quantity of chilled water to the drywell fan-coil units and to two supplemental cooling units at a maximum of

45°F leaving water temperatures from the chiller, and a maximum of 10°F ΔT across the chiller.

c. The condenser water quantities are supplied from the plant service water at a maximum of 95°F and a design temperature differential of 7.5°F across the condensers during normal conditions.

d. The drywell chilled water system consists of two 100%-capacity chilled water circuits each comprising one chilled water pump, one chiller, one air separator, one compression tank, and two drywell fan-coil units.

e. Redundant isolation valves are provided in each supply and return line from the fan-coil units at the point of drywell penetrations and at the point of primary containment penetrations. These valves are powered from the Class 1E buses and have handswitches on the main control board. The valves are automatically activated to close by the primary containment isolation signal which overrides the manual operation.

f. Motor operated valves are provided to supply supplemental drywell cooling air handling units from any operating pump-chiller train (A or B). Refer to Drawing M05-1109.

g. The two 100%-capacity drywell chilled water systems have a full-sized cross-connection through normally closed and manually operated valves, and a smaller cross-connection line to allow a small tempering flow through the idle loop. This assures that the proper cooling will be maintained throughout the drywell should one chilled water system fail.

h. Refrigerant R-12 is used in the drywell chillers.

i. Each of the two chilled water loops is equipped with a chemical feeder which is used to inject a corrosion inhibitor into its respective loop.

j. <u>Controls and Instrumentation</u>

1. The drywell chilled water system works in conjunction with the drywell cooling system, to provide cooling to the four drywell fan coil units and two of the four supplemental fan coil units, to meet the cooling requirements inside the drywell. The pumps and chillers are manually started. The chillers are interlocked with the respective pumps.

2. The chiller is interlocked with a flow switch provided in the leaving water line from the chiller.

3. Each chiller is provided with trips/alarms to protect the equipment from damage due to abnormal operating conditions.

4. Loss of water flow through the chiller is annunciated on the main control board.

5. Each chiller is provided with the necessary controls to maintain the design leaving water temperature. During station shutdown, the chiller leaving water temperature controller will be manually reset to a higher temperature to maintain drywell temperatures above 65° F under low cooling load conditions.

6. All instruments and controls for the drywell chilled water system are all electric or electronic.

9.2.8.2.3 Safety Evaluation

The drywell chilled water system is not a safety-related system.

Chemicals used for inhibiting corrosion have the potential to be activated by the neutron flux in the drywell during power operation. Changes in the type or amount of corrosion inhibitor used in this system will be reviewed and approved by the Plant Operations Review Committee.

9.2.8.2.4 Testing and Inspection

The refrigerant suction and discharge pressures, as well as the compressor's lubricant pressure will be periodically monitored to assure that all normally operating equipment is functioning properly. Each chilled water system loop will be alternately operated for on-line inspection and testing to ensure operability.

All equipment was factory inspected and tested in accordance with applicable equipment specifications and codes. System piping and erection of equipment was inspected during various construction stages. Construction tests were performed on all mechanical components, and the system was balanced for the design water flows and system operating pressure. Controls, interlocks, and safety devices on each system were cold checked, adjusted and tested to ensure the proper sequence of operation. A final integrated acceptance test was be conducted with all equipment and controls operational to verify the system performance. Preoperational tests were performed on mechanical components of the system. Maintenance is performed on a scheduled basis based on manufacturer's recommendations, plant operating experience, and good engineering practice.

9.2.8.3 Plant Chilled Water System

This system provides chilled water to chilled water coil banks in the ventilation supply air units, air-handling units throughout the plant, switchgear heat removal system area coolers that remove heat in accessible and inaccessible areas throughout the plant, and other system cooling coils, and the off-gas vault refrigeration system condensers and oil coolers.

9.2.8.3.1 Design Bases

9.2.8.3.1.1 Safety Design Bases

a. The plant chilled water system is non-safety-related, except for components located between the containment isolation valves and drywell isolation valves.

b. The chilled water piping components are seismically supported in some areas in Seismic Category I buildings to preclude damage to safety-related equipment in case of a seismic event.

c. At the containment and drywell penetrations, the plant chilled water system supply and return piping is equipped with redundant safety-related motor-operated isolation valves, one on each side of the containment and drywell penetrations. Isolation valves and piping between isolation valves are Safety Class 2.

9.2.8.3.1.2 Power Generation Design Bases

a. The system is not required to function in any but normal station operating conditions.

b. The plant chilled water system is designed to provide an adequate quantity of chilled water to the drywell (two coolers only), and the containment building, turbine building, radwaste building, fuel building, control building, and auxiliary building ventilation systems and area coolers in these buildings, and other system cooling coils to meet the cooling load requirements.

c. The system is designed with sufficient redundancy to ensure the power generation objective.

9.2.8.3.2 System Description

a. The schematic design of the plant chilled water system is shown in Drawing M05-1117. Nominal size and type of principal system components are listed in Table 9.2-21.

b. The system consists of five water-cooled centrifugal chiller/pump combinations.

c. The system cooling capacity is based on dissipated heat gains from lighting, electrical, transmission, equipment, and piping systems heat losses.

d. Each pump suction is connected to a common return header while each chiller discharge is connected to a common supply header.

e. The condenser of each plant water chiller is cooled by the plant service water system as described in Subsection 9.2.1.1.

f. Chilled water temperature leaving each chiller is controlled at a maximum of 45° F $\pm$ 2° F when the plant service water temperature is 95° F. However the system is designed to enable the operating personnel to reduce the leaving chilled water temperature to 40° F when the plant service water temperature is lower than 90° F.

g. Each chiller/pump combination is independent of other combinations with the exception of four chiller operation as described under “Instrumentation and Controls” below.

h. The plant chilled water system is equipped with a chemical feeder which is used to inject a corrosion inhibitor.

i. Instrumentation and Controls

1. The plant chilled water system operates in conjunction with the drywell (two supplemental drywell cooling units), containment building, auxiliary building, turbine building, fuel building, and radwaste building ventilation system, air handling units, area coolers, and other system cooling coils throughout the plant. The pumps are started by handswitches installed on local control panels and the main control board.

2. The chilled water temperature leaving the chillers is controlled to a nominal design value of 45° F. System capacity modulation is achieved by built-in inlet guide vanes at each compressor suction.

3. Each plant water chiller is provided with built-in protection against freezing, high refrigerant pressure, low refrigerant pressure, high discharge temperature, motor overload, lubrication oil failure, and motor high temperature.

4. If chilled water flow through an operating chiller is lost for any reason, interlocks to a flow switch in the chilled water line shut down that chiller, and its respective chilled water pump is automatically shut down after a time delay. An alarm is also annunciated on the local control panel, after the same time delay.

5. If the plant service water pressure at the inlet of any operating chiller is lost for any reason, the chiller is shut down by interlocks, and a local alarm is annunciated after a time delay.

6. Each chiller is interlocked with its respective pump to permit chiller operation only if the pump is running.

7. If four chillers are to be operated simultaneously, an interlock is established at the switchgear which will trip either the C or D chiller feed breaker if the 4kV bus transfers from the normal source (UAT feed breaker) to the standby/startup source (RAT feed breaker). Pump operation is not affected by this interlock.

8. The plant water chillers are located on elevation 702 Ft. of the control building to minimize piping and to mitigate potential vibration transmission problems.

9. High chilled water leaving temperature and loss of water flow in each unit are annunciated on the local control panel.

10. The instruments and controls for the plant chilled water system are pneumatic, electric, and electronic.

11. There is a common trouble window on the main control board for any trouble or trip on the local control panel.

12. Typically, the chilled water through the numerous area coolers is not modulated, and the area cooler fans are controlled by control switches and temperature switches. However, the chilled water flow though the air handling units and other system cooling coils typically have individual supply/return chilled water piping, a temperature transmitter, and a controller to modulate a control valve to control the flow of the chilled water leaving the cooling coil to meet the cooling requirements.

9.2.8.3.3 Safety Evaluation

a. The operation of the plant chilled water system is not required to assure either of the following conditions:

   1. the integrity of the reactor coolant pressure boundary, or

   2. the capacity to shut down the reactor and maintain it in a safe shutdown condition.

b. A failure analysis is not presented since the system is not nuclear safety-related.

c. The system incorporates features that assure its reliable operation over a full range of normal plant operation. These features include the installation of redundant principal system components.

d. Instrumentation is provided to monitor the temperature in the leaving and entering water from the plant water chillers.

e. Vents from each chiller refrigerant side safety relief valves are discharged to the outside atmosphere via a common vent line.

f. Chemicals used for inhibiting corrosion have the potential to be activated by the neutron flux in the drywell during power operation. Changes in the type or amount of corrosion inhibitor used in this system will be reviewed and approved by the Facility Review Group.

9.2.8.3.4 Testing and Inspection

The refrigerant suction and discharge pressures, as well as the compressor's lubricant pressure are periodically monitored to assure that normally operating equipment is functioning properly.

Equipment was factory inspected and tested in accordance with the applicable equipment specifications and codes. Systems piping and erection of equipment was inspected during various construction stages. Construction tests were performed on all technical components and the system was balanced for the design water flows and system operating pressures. Controls, interlocks, and safety devices on each system were cold checked, adjusted and tested to ensure the proper sequence of operation. A final integrated acceptance test was conducted with all equipment and controls operational to verify the system performance.

Maintenance is performed on a scheduled basis based on manufacturer's recommendations, plant operating experience, and good engineering practice.

9.2.8.4 Service Building Chilled Water System

This system provides chilled water to the service building air handling units cooling coils to meet cooling load requirements and functions only during normal plant operating conditions.

9.2.8.4.1 Design Bases

9.2.8.4.1.1 Safety Design Bases

The service building chilled water system is not required to function in any but normal plant operating conditions and therefore has no safety design bases.

9.2.8.4.1.2 Power Generation Design Bases

a. The service building chilled water system is not required to operate during abnormal plant operating conditions (loss of offsite power and LOCA).

b. The chilled water leaving and entering the system is approximately 55° F and 45° F, respectively.

c. The system cooling capacity is based on cooling the supply air to each service building air-handling unit.

d. The design of the system permits periodic inspection and testing of principal system components.

e. Plant service water is used for the condensers of the refrigeration units.

9.2.8.4.2 System Description

a. The schematic diagram of the service building chilled water system is shown in Drawing M05-1112, Sheets 10 through 12. Nominal size and type of principal system components are listed in Table 9.2-22.

b. The system is designed to provide an adequate quantity of chilled water to the service building air-handling units at a nominal 45° F leaving water temperature from the chiller, and a maximum of 10° F temperature differential across the chiller.

c. The condenser water quantities are supplied from the plant service water at a maximum of 95° F and a design temperature differential of 7.7° F across the condensers.

d. Refrigerant R-11 is used in the service building chillers.

e. Instrumentation and Controls

1. The service building chilled water system operates in conjunction with the Service building HVAC system to meet the cooling requirements in the service building. The service building chilled water system is controlled from a local panel.

2. When the chilled water pump is running the chiller will operate provided that the chilled water flow, monitored by a flow element in the supply line of the chiller, is normal.

3. Each chiller is provided with trips/alarms to protect the equipment from damage due to abnormal operating conditions.

4. Low service water pressure and low water flow entering chiller are indicated by lights on the local control panel. Each chiller is provided with necessary controls to maintain the design leaving water temperature.

5. The instruments and controls for the service building chilled water system are all electric or electronic and pneumatic.

9.2.8.4.3 Safety Evaluation

The service building chilled water system is a non-safety-related system.

9.2.8.4.4 Testing and Inspection

The refrigerant suction and discharge pressures, as well as the compressor's lubricant pressure are periodically monitored to assure that normally operating equipment is functioning properly.

Equipment is factory inspected and tested in accordance with applicable equipment specifications and codes. System piping and erection of equipment are inspected during various construction states. Construction tests are performed on mechanical components and the system is balanced for the design water flows and system operating pressures. Controls, interlocks, and safety devices on each system are cold checked, adjusted and tested to ensure the proper sequence of operation. A final integrated acceptance test is conducted with equipment and controls operational to verify the system performance. Maintenance is performed on a scheduled basis based on manufacturer's recommendations, plant operating experience, and good engineering practice.

9.2.8.5 Deleted.

TABLE 9.2-1
EQUIPMENT COOLED BY THE PLANT SERVICE
WATER SYSTEM (PSWS)

1. Turbine Oil Coolers (2)

2. Service Building HVAC Units (2)

3. TBCCW Heat Exchangers (2)

4. CCW Heat Exchangers (2)

5. Drywell Chillers (2)

6. Plant Chilled Water System Chillers (5)

7. Reheater Blanketing Steam Drain Cooler (1)

   Steam blanketing system will only be used as allowed by station procedures. There is no impact on nuclear safety from the use or non-use of the steam blanketing system.

8. Generator Stator Coolers (2)

9. H_2 Coolers (4)

10. Breathing Air Compressor (2)

    (Isolated, Retired, in Place)

11. Counting Room Condensing Unit

12. Hydraulic Power Unit Fluid Coolers

13. Computer Equipment Room A/C Units (2)

14. PASS Closed Loop Cooler

15. PASS Panel Room Cubicle Cooler

The PSWS system is the source of water for the following:

1. Fire Protection (Back-up Source)

2. Traveling Screen Wash

3. WS Strainer Backwash

4. Condenser Waterbox Fill

Table 9.2-1 (Cont'd.)

5. Circulating Water Chlorine Ejectors
6. Service Water Booster Pumps for Chlorine Ejectors
7. Makeup Demineralizer Raw Water Supply
8. The WS System is employed to dilute and discharge liquid radwaste to Lake Clinton.
9. Shutdown Service Water System

TABLE 9.2-2
PLANT SERVICE WATER SYSTEM COMPONENT DESCRIPTION

PSWS Pumps	
Quantity	3 per unit, 50% each
Capacity (gpm)	22,000
Type	Vertical Turbine, 2 stage
TDH (ft. H_20)	266
Driver	
Type	Electric Motor
Horsepower	2000
Speed in rpm	885
PSWS STRAINERS	
Quantity	2 per unit, 50% each
Capacity (gpm)	22,000
Type	Automatic Backwash
Backwash flow requirements	650 gpm

TABLE 9.2-3
ULTIMATE HEAT SINK AUXILIARY* LOADS FROM THE SHUTDOWN SERVICE WATER SYSTEM

EQUIPMENT	HEATLOAD (10^6 Btu/hr)
Shutdown Service Water Pump Room Coil Cabinets	0.59
Shutdown Service Water Pump Motor Coolers	0.09
Fuel Pool Cooling and Cleanup Heat Exchangers	46.20
Fuel Pool Cooling and Cleanup Pump Motors	0.15
Control Room Chillers	3.37
RHR Heat Exchanger Room Coolers	0.44
Division 1 and 2 Diesel-Generator Heat Exchangers	26.76
Division 3 Diesel-Generator Heat Exchanger	6.93
Essential Switchgear Heat Removal Units	1.71
RHR Pump Room Coolers	0.72
RCIC Pump Room Cooler	0.11
LPCS Pump Room Cooler	0.42
HPCS Pump Room Coolers	0.57
SBGT Room Coolers	0.36
Hydrogen Recombiner Room Cooler	0.30
Inverter Room Coolers	0.04
MSIV Leakage Room Coolers	0.10
RHR Pump Seal Coolers	0.21
HG Room Cooling Coil Cabinet	0.10
SBGT Exhaust Radiation Monitor Cooler	~0.00
Total	~89.2

* RHR Heat Exchangers included elsewhere. Values provided here are approximate. The total heat load used in the Ultimate Heat Sink Analysis envelopes the total value in this table.

TABLE 9.2-4
SHUTDOWN SERVICE WATER SYSTEM COMPONENT DESCRIPTION

SSW Pumps Division I and II	
Quantity	1 per division
Capacity (gpm)	16,500
Type	Vertical
NDH (ft)	275
Driver (hp)	1500
Lowest water elevation at which pump must operate satisfactorily	671'-6"
SSW Strainers Division I and II	
Quantity	1 per division
Capacity (gpm)	16,500
Type	Automatic Backwash
Backwash flow requirements (gpm)	650
SSW Pump Division III	
Quantity	1
Capacity (gpm)	1,100
Type	Vertical
NDH (ft)	175
Driver (hp)	75
Lowest water elevation at which pump must operate satisfactorily	671'-6"
SSW Strainer Division III	
Quantity	1
Capacity (gpm)	1,200
Type	Automatic Backwash
Backwash flow requirements (gpm)	250

TABLE 9.2-5
SHUTDOWN SERVICE WATER SYSTEM
PASSIVE FAILURE ANALYSIS

SINGLE PASSIVE FAILURE	ANALYSIS
Failure of pumps discharge line - large break	Shutdown cooling requirements are met by the two other SSWS pumps. A single failure cannot affect two pump discharge lines at the same time. SSWS pump house is designed so that no damage is sustained by the other pumps if a discharge line should break.
Failure of pump discharge line - small break	If insufficient cooling results in overheating of equipment, the other two SSWS loops provide the necessary cooling. The station is designed so that any flooding caused by the passive failure of an SSWS component will not result in less equipment remaining functional than that required for a safe shutdown of the station.
Failure of discharge line to the ultimate heat sink	The SSWS loop containing the broken discharge line is shut down and the required cooling is provided by the other SSWS loops.

TABLE 9.2-6
SHUTDOWN SERVICE WATER SYSTEM ACTIVE FAILURE ANALYSIS

SINGLE ACTIVE FAILURE	ANALYSIS
Failure of diesel-generator to start or failure of all power to a single Class 1E power system bus	The other SSWS pumps are powered from other buses which feed from other diesel-generators and therefore provide sufficient cooling.
Failure of pump auto start signal	Same analysis as above.
Failure of isolation valve at CCWS cross-connection to function	Redundant valve or alternate equipment is used to perform safety function.
Failure of auto backwash of strainer	Differential pressure drop across the strainer will increase until alarm point. Operator action can (1) manually bypass plugged strainer, or (2) can take pump out of service.
Loss of all offsite power	All SSW pumps and strainers will stop momentarily and restart according to the diesel-generator loading sequence.
Failure of isolation valve between the plant service water system and the SSWS	The other two isolation valves function normally and these loops are available to provide sufficient cooling.
Failure of the ultimate heat sink	Not a credible failure.

For additional Shutdown Service Water System Failure Modes information see the Hazards and Operablity Analysis (HAZOPS) report “Hazards Analysis For The Cooling Water Sceen House and Associated Systems, Structures and Components” which is located in calculation No. IP-M-0497 (this document is not incorporated by reference).

TABLE 9.2-7
EQUIPMENT COOLED BY THE COMPONENT COOLING WATER SYSTEM

Fuel Pool Cooling and Cleanup Heat Exchangers

Reactor Recirculation Pumps Seals, Motor Bearings, and Motor Windings

Reactor Water Cleanup Nonregenerative Heat Exchangers

Reactor Water Cleanup Recirculation Pump Seal Coolers

Process Sampling System Sample Coolers

Service Air Compressor After Coolers and Jackets

Radwaste Floor Drain and Chemical Waste Evaporator Package Equipment

Drywell Equipment Drain Sump Coolers

Electrode Boiler Recirculation Pump Seal Coolers

Reactor Sample Station

Penetration Coolers

Condenser Vacuum Pumps

Vent Cooler Condenser

Chemical Waste Evaporator and Sub-Cooler Vent Coolers

Corrosion Test Rack

Concentrate Waste Tank Vent Coolers

Density Element Cooler

Electrode Boiler Feedwater Pumps

Evaporator Condensate Drain Tank Pump

Fuel Pool Cooling and Cleanup Pump Motors

TABLE 9.2-8
COMPONENT COOLING WATER SYSTEM COMPONENT DESCRIPTION

CCW Pumps	
Quantity	3, 50% capacity each
Type	horizontal, centrifugal
Capacity, each, gpm	6,000
NDH	220 ft
CCW Heat Exchangers	
Quantity	2 for Unit 1
Type	TEMA, CFN
Shell Side	
Fluid	Demineralized Water
Flow rate, gpm	7,200 maximum 6,000 normal
Tube Side	
Fluid	Plant Service Water
Number of passes	2
Flow rate gpm	7,200 maximum 6,000 normal
CCW Storage Tank	
Capacity, in gal	20,000
Design Pressure	15 psig
Design Temperature	150

TABLE 9.2-9
MAKEUP CONDENSATE STORAGE SYSTEM
COMPONENT DATA

Makeup Condensate Transfer Pumps	
Quantity	2
Type	Centrifugal Horizontal
Capacity, each, gpm	500
TDH, ft	220
Driver hp	100
Demineralized Water Storage Tank Quantity	
Quantity	1
Capacity, gal	400,000
Design pressure	Atmospheric

TABLE 9.2-10
DEMINERALIZED WATER MAKEUP SYSTEM
MAJOR COMPONENTS AND THEIR DESIGN DATA

Two Up Flow Filtration Units:	Each 190 g.p.m., Atmospheric (open top) pressure for Total Suspended Solids removal of ≥95%.
One Clearwell Tank:	Storage capacity 32,000 gallons.
Two Clearwell Transfer Pumps:	Centrifugal, 500 g.p.m. at 230 ft. head.
Three Sand Filters:	Each 167/250 g.p.m. with 18 inches deep fine sand bed. Filtering rate 3.0/4.5 gpm/ft^2. The sand filters may be bypassed.
One Filtered Water Tank:	Storage capacity 224,000 gallons.
Two Reverse Osmosis Transfer Pumps:	Centrifugal, 117 g.p.m. at 152 ft. head.
Two Filtered Water Supply Pumps:	Centrifugal, 200 g.p.m. at 320 ft. head.
Two Potable Water Filters:	Each 3 microns with average flow of 30 g.p.m. A minimum of two log removal for giardia cysts results from this filtration process.
Potable Water Storage Tank:	Storage capacity 30,000 gallons.
Potable Water Booster Pumps:	Centrifugal, 150 g.p.m. at 165 ft. head.
One Reverse Osmosis Pre Filter:	5 micron with average flow of 97 g.p.m.
Two Reverse Osmosis Units	Each, 50 g.p.m. permeate and 27 g.p.m. concentrate, in one pass operation. Total Dissolved Solids removal to ≤14 ppm in one pass operation.
One Reverse Osmosis Permeate Storage Tank:	Storage capacity 500 gallons.
Two Make Up Condensate Booster Pumps:	Centrifugal, 50 g.p.m., each at 22 ft. head.
Eight Mixed Polisher Bottles:	Each 12 g.p.m., arranged in two sets of four for Lead/Lag operation at 50 gpm, maximum. Each bottle is rated for a minimum of 32,000 gallons.

TABLE 9.2-10
DEMINERALIZED WATER MAKEUP SYSTEM
MAJOR COMPONENTS AND THEIR DESIGN DATA (Continued)

Five Chemical Feed Systems:

Polymer/Coagulant:	Pre Up Flow Filters, one pump and tank.
Caustic Soda (25% NaOH):	Potable Water, one pump and at the Interstage of the Reverse Osmosis Units, one pump. One tank is used caustic supply.
Antiscalant:	Inlet of the Reverse Osmosis Units, two pumps and one tank.
Sodium Bisulfite (38% $NaHSO_3$):	Inlet of the Reverse Osmosis Units, two pumps and one tank.
Sodium Hypochlorite (12% NaOC1):	Pre and Post Up Flow Filters, two pumps and one tank, and at Potable Water, one pump and tank.

TABLE 9.2-11
ULTIMATE HEAT SINK HEAT LOAD

(Based on: 1. One 1138.5 MW_e unit - under LOCA or LOOP
2. One RHR loop per unit operating)

TIME (hr)	RHR EXCHANGER HEAT LOAD (10^6 Btu/hr)	AUXILIARY HEAT LOAD (10^6 Btu/hr)	TOTAL HEAT LOAD (10^6 Btu/hr)
0.0 - 0.5	0.0	90.65	90.65
0.5	74.3	90.65	164.95
1.	85.0	90.65	175.65
2.	97.8	90.65	188.45
4.	110.2	90.65	200.85
6.8	116.2	90.65	206.85
8.	115.8	90.65	206.45
12.	112.3	90.65	202.95
24.	99.2	90.65	189.85
48.	77.3	90.65	167.95
72.	69.3	90.65	159.95
96.	63.3	90.65	153.95
120.	58.9	90.65	149.55
144.	58.5	90.65	149.15
168.	50.0	90.65	140.65
240.	48.6	90.65	139.25
480.	38.4	90.65	129.05
720.	34.3	90.65	124.95

TABLE 9.2-12
Deleted

TABLE 9.2-13
HEAT REJECTION RATES FOR UNIT 1 UNDER LOCA OR LOOP
(Based on one 3473 MW_t Unit +2% Instrument Error Allowance)

TIME (SEC)	TIME (HR)	CORE DECAY HEAT RATE[1] (10^6 Btu/hr)	AUXILIARY SYSTEM HEAT RATE (10^6 Btu/hr)	SENSIBLE HEAT RATE (10^6 Btu/hr)	PUMP HEAT RATE (10^6 Btu/hr)	TOTAL HEAT REJECTION RATE (10^6 Btu/hr)	TOTAL INTEGRATED HEAT REJECTION (10^6 Btu/hr)	MAXIMUM ALLOWABLE INLET WATER TEMPERATURE (°F)
.0	.0	12089.0	90.65	0.0	13.1	12192.8	0.0	95.
10	0.0028	631.9	90.65	20.	13.1	755.7	5.4	95.
60	0.0167	445.1	90.65	138.	13.1	686.9	15.0	95.
100	0.0278	400.9	90.65	220.	13.1	724.7	22.9	95.
1000	0.2778	250.8	90.65	88.	13.1	442.6	161.9	95.
1800	0.5	211.3	90.65	55.	13.1	370.1	252.1	95.
3600	1.0	171.0	90.65	26.5	13.1	301.3	418.5	95.
7200	2.0	138.4	90.65	11.	13.1	253.2	697.3	95.
14400	4.0	118.1	90.65	4.	13.1	225.9	1179.1	95.
28800	8.0	100.5	90.65	1.5	13.1	205.8	2035.6	95.
43200	12.0	91.5	90.65	0.5	13.1	195.8	2828.3	95.
86400	24.0	76.1	90.65	0.	13.1	179.9	5085.6	95.
1.728×10^5	48.0	61.9	90.65	0.	13.1	165.7	9217.1	95.
2.592×10^5	72.0	54.1	90.65	0.	13.1	157.9	13093.9	95.
3.456×10^5	96.0	48.7	90.65	0.	13.1	152.5	16816.3	95.
4.320×10^5	120.0	44.7	90.65	0.	13.1	148.5	20424.6	95.
5.184×10^5	144.0	41.5	90.65	0.	13.1	145.3	24004.7	95.
6.048×10^5	168.0	39.0	90.65	0.	13.1	142.8	27418.8	95.
8.640×10^5	240.0	33.6	90.65	0.	13.1	137.4	37491.9	95.
1.296×10^6	360.0	28.4	90.65	0.	13.1	132.2	53518.1	95.
1.728×10^6	480.0	25.1	90.65	0.	13.1	128.9	69316.2	95.
2.592×10^6	720.0	21.0	90.65	0.	13.1	124.8	99723.0[2]	95.

NOTES:
1. Total Core Decay Heat Rate based on ANS 5.1-1979 with 2 sigma uncertainty added.
2. Primary system fluid sensible heat, approximately 250 x 10^6 Btu, would be rejected either in blowdown phase for a LOCA or during system cooldown for a shutdown transient. This additional heat rejection would increase the plant total integrated heat rejection to 99,973 Btu.

TABLE 9.2-14
THERMAL PARAMETERS OF THE POND*
(Original Design - Two Units)

MAXIMUM TEMPERATURES	ANALYSIS BASED ON HEAT REJECTION RATES CALCULATED AS PER NRC GUIDELINES		
	BETWEEN 0-31 DAYS	BETWEEN 31-62 DAYS	BETWEEN 62-92 DAYS
At Station Intake (°F)	92.4**	87.2	84.0
At Station Discharge (°F)	101.1	95.8	92.6
Pond Natural (°F)	91.2**	85.2	81.6

* UHS (Area: 148.2 acres, Capacity at 675 feet, Nominal Elevation = 915.3 acre-ft) 2-991 MWe BWR Units, Clinton Unit 1-LOCA, Unit 2-LOOP. These values envelope the single unit thermal parameters.

** As specified in 9.2.1.2, the shutdown service water (SX) design basis inlet temperature is 95°F.

NOTE: UNIT 2 HAS BEEN CANCELLED.

TABLE 9.2-15
CAPABILITY OF THE POND*
(Original Design - Two Units)

	ANALYSIS BASED ON HEAT REJECTION RATES CALCULATED AS PER NRC GUIDELINES			
TIME PERIODS	ELEVATION (ft)	CUMULATIVE DROP IN ELEVATION (ft)	AVAILABLE** POND VOLUME (acre-ft)	AVAILABLE** POND AREA (acres)
At 31 Days	674.3	0.7	752.0	130.6
At 62 Days	673.6	1.4	662.0	129.7
At 92 Days	673.2	1.8	605.0	129.1

* UHS (Area: 148.2 acres, Capacity at 675 feet Nominal Elevation = 915.3 acre-ft) 2-991 MWe BWR Units, Clinton Unit 1-LOCA, Unit 2-LOOP. These values envelope the single unit values.

** Effective Values from Computer Analysis

NOTE: UNIT 2 HAS BEEN CANCELED

TABLE 9.2-16
CONDENSATE STORAGE FACILITY COMPONENT DATA

Cycled Condensate Transfer Pump	
Quantity	3
Type	Centrifugal Horizontal
Capacity, each, gpm	800
TDH, ft	232
Driver, hp	125
Cycled Condensate Storage Tank	
Quantity	1
Capacity, gal	400,000
Design pressure	Atmospheric
RCIC Storage Tank	
Quantity	1
Capacity, gal	125,000
Design pressure	Atmospheric

TABLE 9.2-17
EQUIPMENT COOLED BY THE TURBINE BUILDING
CLOSED COOLING WATER SYSTEM

EHC Fluid Coolers

CRD Pump Oil Coolers

Alternator Exciter Coolers

Isolated Phase Bus Duct Coolers

Glycol Cooler Off-Gas System

Condenser Vacuum Pumps

Motor-Driven Reactor Feed Pump Oil Cooler

Condensate Pump Motor Oil Coolers

Condensate Booster Pump Oil Coolers

Process Sample Panel Coolers

TABLE 9.2-18
TURBINE BUILDING CLOSED COOLING WATER SYSTEM
COMPONENT DESCRIPTION

TBCCW Pumps	
Quantity	2, 100% capacity each
Type	Horizontal Centrifugal
Capacity, gpm	1034
NDH	218 ft
TBCCW Heat Exchangers	
Quantity	2, 100% capacity each
Type	TEMA, CGN
Heat Load Btu/hr	4.1×10^6 (Titanium Tubes)
Shell Side	
Fluid	Inhibited, demineralized water
Flow rate, gpm	1034
Number of passes	2
Temperature in/out °F.	117/105
Tube Side	
Fluid	Plant Service Water
Flow rate, gpm	1,000
Number of passes	2
Temperature in/out °F	95/105
TBCCW Storage Tank	
Capacity, gal	10,000
Design Temperature, °F	200
Design Pressure	Atmospheric

TABLE 9.2-19
CONTROL ROOM CHILLED WATER SYSTEM

	NAME OF EQUIPMENT	NUMBER, TYPE, QUANTITY AND NOMINAL CAPACITY
A.	Refrigeration Unit	0VC13CA 0VC13CB
	Type	Centrifugal water-cooled
	Quantity	2
	Capacity (Btu/hr)	2,400,000
	Power (kW)	211
B.	Chilled Water Pump	0VC08PA 0VC08PB
	Type	Centrifugal horizontal split casing
	Quantity	2
	Capacity (gpm)	480
	Total developed heat (ft H_2O)	98
	Motor (hp)	30
C.	Compression Tank	0VC14TA 0VC14TB
	Quantity	2
	Capacity (gallons)	60

TABLE 9.2-20
DRYWELL CHILLED WATER SYSTEM EQUIPMENT PARAMETERS

	NAME OF EQUIPMENT	NUMBER, TYPE, QUANTITY AND NOMINAL CAPACITY
A.	Drywell Chilled Water Chillers	Centrifugal
	Type	Centrifugal
	Quantity	2
	Capacity (tons of refrigeration)	500
B.	Drywell Chilled Water Pumps	1VP03PA 1VP03PB
	Type	Centrifugal horizontal
	Quantity	2
	Capacity (gpm)	1,200
	Head (ft H_2O)	175
	Motor (hp)	100

TABLE 9.2-21
PLANT CHILLED WATER SYSTEM

	NAME OF EQUIPMENT	NUMBER, TYPE, QUANTITY AND NOMINAL CAPACITY	
A.	Refrigeration Unit	0WO02CA 0WO02CB 0WO02CC	0WO02CD 0WO02CE
	Type	Centrifugal water-cooled	
	Quantity	5	
	Capacity (Btu/hr)	13,200,000	(12,564,000)
	Power (kW)	884 (825)	
B.	Chilled Water Pumps	0WO03PA 0WO03PB 0WO03PC	0WO03PD 0WO03PE
	Type	Centrifugal, horizontal split casing	
	Quantity	5	
	Capacity (gpm)	1,760	
	Total developed head (ft H_2O)	225	
	Motor (hp)	200	
C.	Air Separator	0WO05M	
	Quantity	1	
	Capacity (gpm)	1,900	
D.	Compression Tank	0WO04T	
	Quantity	1	
	Capacity (gallons)	approx. 1,200	

Note: Numbers in brackets are for chillers with R-134a refrigerant.

TABLE 9.2-22
SERVICE BUILDING CHILLED WATER SYSTEM

	NAME OF EQUIPMENT	NUMBER, TYPE, QUANTITY AND NOMINAL CAPACITY
A.	Chilled Water Pumps	0VS12PA, 0VS12PB, 0VS12PC
	Type	Centrifugal, horizontal
	Quantity	3
	Capacity (gpm)	360
	Total developed head (ft H_2O)	150
	Motor (hp)	25
B.	Water Chillers	0VS07CA, 0VS07CB
	Type	Centrifugal
	Quantity	2
	Capacity (tons of refrigeration)	149
C.	Compression Tank	0VS04M
	Quantity	1
	Capacity (gallons)	15
D.	Air Separator	0VS05M
	Quantity	1
	Capacity (gpm)	360

9.3 PROCESS AUXILIARIES

9.3.1 Compressed Air Systems

The compressed air system is divided into three subsystems, service air (SA), instrument air (IA), and breathing air (RA). The Breathing Air Compressors, Filter Train and associated instrumentation have been abandoned/retired in place. The Control Room Emergency Breathing Air System is still operable.

9.3.1.1 Design Bases

9.3.1.1.1 Safety Design Bases

Certain IA system pressure regulators perform a safety-related function. These regulators are non-ASME, Section III. Only the following portions of the compressed air system are designed to the requirements of ASME, Section III.

a. Those portions of the SA, IA, and RA systems which penetrate the containment and drywell walls are of Seismic Category I, Safety Class 2 design. These portions are equipped with Seismic Category I, Safety Class 2 designed isolation valves to satisfy single-failure criteria as discussed in Subsection 6.2.4.

b. The portion of the IA system from the inside Containment isolation valves to the accumulators which provides air to the automatic depressurization system (ADS) accumulators is classified as Seismic Category I, Safety Class 3.

c. The ADS accumulator backup air supply piping from the compressed air tank farm to the outside containment isolation valve is Seismic Cat I, Safety Class 3 except for the compressed air tank farms and air filters which are Seismic Category I, Safety Class Other.

d. The portion of RA piping which is connected to the Control Room Emergency Breathing Air Storage System is classified as Seismic Category I, Safety Class Other.

Breathing air is purified to grade D standards as listed in ANSI/CGA G-7.1, "Commodity Specification for Air".

9.3.1.1.2 Power Generation Design Bases

a. The service air system provides oil free, filtered and dried air for service and maintenance use throughout the plant. The SA system is the source of air for the IA system. Pressure reducing devices are provided where needed.

b. The IA system provides oil free, filtered, and dried air to instruments and controls throughout the plant, including ADS function safety/relief valves.

9.3.1.2 System Description

a. The service air system is shown in Drawing M05-1048. The SA system consists of three air compressors, two volume tanks for moisture separation, three

heatless air dryers complete with prefilter and after-filter, two air receivers, and necessary piping, valves, and instrumentation. System component performance data are given in Table 9.3-1.

Service air is distributed to the plant after compressing to 110 psig, drying to a dew point of -40° F and being filtered to remove all particles 0.9 micron and larger. Two compressors and two dryers are required for normal plant operation. One compressor runs continuously, the second compressor starts automatically when the discharge pressure falls below a preset value. A third compressor and dryer are provided as spares. Each building has a main header. Hose stations are connected to the main header for service and maintenance use. The hose stations are located throughout the plant. Equipment requiring frequent use of service air is connected directly to the service air header. Air receivers are located in the screen house and the makeup water pump house to ensure a supply of air in these buildings in the event that a break occurs in the line to these buildings.

b. The instrument air system is shown in Drawing M05-1040. The IA system is used by one unit. Instrument Air receivers are provided in the screenhouse and makeup water pump house. Air receivers are not used in the main plant since a large storage capacity is provided by the piping system.

Twelve air amplifiers are provided, for 100% redundancy. Each SRV utilized for automatic depressurization is equipped with an air accumulator and check valve arrangement. Two air bottle tank farms consisting of 8 bottles each are provided as a backup air supply for the ADS function and the low and medium LLS-SRV safety/relief valves. The IA system consists of the above-mentioned equipment and necessary piping, valves, and instrumentation. System component performance data are given in Table 9.3-1.

The IA system takes filtered and dried air from the SA system and distributes it to air operated valves and instrumentation throughout the plant.

Air for the ADS function and the low and medium LLS-SRV safety/relief valves is required to be between 140 psig (to ensure the ADS valves are capable of two actuations at 70% of drywell design pressure) and 200 psig (valve upper limit). Air amplifiers are provided to boost the pressure to approximately 160 psig at normal instrument air system operating pressure. The air supply for the ADS and the low and medium LLS-SRV safety relief valves is split into two divisions. One division supplies air to the ADS safety/relief valves and the medium LLS-SRV on the A and C steamlines side of the reactor pressure vessel, and the other division supplies air to the valves (ADS and the low and LLS-SRV) on the B and D side.

Each safety/relief valve is provided with a pneumatic accumulator sized to provide sufficient capacity to ensure an adequate supply pressure to the valve actuator. Each air supply line to an accumulator is provided with a check valve to prevent air loss back out of the accumulator. Each ADS safety/relief valve is provided with additional accumulator volume to provide sufficient air to perform the ADS function.

Two redundant solenoid valves are provided for each ADS safety/relief valve and are arranged so that only one is required to operate to provide pneumatic supply to the actuating cylinder.

Storage bottles provide a Seismic Category I backup supply of air for the ADS and the low and medium LLS-SRV safety/relief valves. A filter downstream of the storage bottles provides secondary IA filtration. A filter is also installed upstream on the IA supply to the MSIV's for the same purpose.

Additional information on the requirements for the ADS air supply is provided in USAR section 5.2.2.4.1.

9.3.1.3 Safety Evaluation

a. The service air system have no safety-related function as discussed in Section 3.2. Failure of the SA system will not compromise any nuclear safety-related system or component and will not prevent the safe shutdown of the reactor.

b. The instrument air supply to the ADS and the low and medium LLS-SRV safety/relief valves has been designed such that the failure of any one component will not result in the loss of instrument air to more than one nuclear safety-related division of ADS and LLS-SRV safety/relief valves. The loss of instrument air to one division of ADS and LLS-SRV safety/relief valves will not prevent the safe shutdown of the unit. A component failure analysis of the instrument air system is given in Table 9.3-2. Each accumulator or receiver has a check valve in the inlet line to prevent backflow due to compressor or amplifier failure. Other pneumatic-operated devices are designed for the fail-safe mode and do not require air supply under abnormal or postulated accident conditions. The compressors are not safety-related and the amplifiers do not require electricity. Therefore, there are no diverse sources of electric power.

c. Certain IA system pressure regulators have been designed such that failure of any one regulator will not compromise the redundant capability of the Control Room HVAC Cooling Water System.

9.3.1.4 Test and Inspections

During the preoperational test phase, the air dryers were checked to ensure that the equipment was performing properly in every respect, the service air compressors were tested to ensure that the assembled package was properly balanced, and the compressors were also tested to determine equipment rating for flow and pressure. The system is proved operable by its use during normal plant operation. The element in the prefilter to the dryer is to be replaced at least once for every 12 months of operations. The element in the afterfilter is to be replaced every 6 months.

The air for the Instrument Air System will be tested, at least annually, at the system filter discharge for a dew point of -40°F and particulate content in excess of 3 microns. In the event of any particulate greater than 3 microns in size at the filter discharge, the need for additional testing at selected test points downstream in the system will be determined. The results of the additional testing will be evaluated to determine the extent of the problem and corrective action

needed. The acceptance criteria for this additional testing at designated test points will be based upon the recommendation of the component vendor for the particulate contamination of the Instrument Air.

9.3.1.5 Instrumentation Application

Compressed air for the service air (SA) and instrument air (IA) systems is supplied by three automatically-controlled air compressors. Compressors are equipped with load and unload mode of control. In the load mode of control, system pressure is maintained by modulating or throttling the inlet and/or blowoff valve as necessary. The unload mode is used to start the compressor and to manually unload it if necessary. In the unload mode, the blow-off or bypass valve is fully open, and the inlet valve is in the minimum throttled or modulated position.

An adequate supply of compressed air is assured by a pressure switch located in the compressed air discharge header, which will auto start a second compressor if the discharge pressure falls below a preset value. The starting of the third compressor is locked out at the main control board. This arrangement allows the greatest flexibility in the use of the compressors during normal and standby operations.

Each compressor has interlocks and/or alarms for important variables, such as high lubricating oil temperature, high interstage air temperature, low cooling water pressure, surge, low lubricating oil pressure, and high vibration.

Local pressure indicators are provided to measure the compressor discharge and several building header pressures.

The compressor discharge is fed to the air dryers which are equipped with pre and after filters. The filters come equipped with differential pressure indicating switches. These switches are used for local alarm indication and a common trouble alarm in the main control room for high differential pressure. They are also used for local indication of the differential pressure across the filter. The dryer outlets are monitored by moisture elements for alarm on the common trouble alarm and local indication. The dryer chambers have pressure switches which activate the common trouble alarm on increasing chamber pressure.

The outlet flow of the air dryers is monitored by pressure switches which give local and common trouble alarms on low outlet pressure. A pressure indicator is also provided in the main control room to indicate air dryer discharge header pressure.

Pressure switches in the Service Air ring headers located in the radwaste, turbine, auxiliary, fuel and control buildings isolate the applicable ring headers and provide low header pressure alarms in the main control room when the pressure falls below 70 psig in the applicable header. Similarly, the pressure switches in the Instrument Air ring headers located in the radwaste and control buildings isolate the applicable ring headers and provide low header pressure alarms in the main control room when the pressure falls below 70 psig in the applicable header. The automatic isolation feature prevents the entire system from being loaded down or lost if a pipe ruptures or excessive air usage occurs in those ring headers.

Service Air in the diesel generator building is supplied from the service air ring header in the control building. A pipe rupture or excessive air usage in the diesel generator building would result in automatic isolation of the control building Service Air header and alarm in the main control room in the event that the control building ring header falls below 70 psig.

Instrument Air in the diesel generator building is supplied from the Instrument Air ring header in the control bulding. A pipe rupture or excessive air usage in the diesel generator building would result in automatic isolation of the control building Instrument Air header and alarm in the main control room in the event that the control building ring header falls below 70 psig.

Service Air and Instrument Air in the Makeup Water Pump House and the Screen House is supplied from Service Air ring header in the turbine building. A pipe rupture or excessive air usage in the Makeup Water Pump House or the Screen House would result in automatic isolation of the turbine building Service Air header and alarm in the main control room in the event that the turbine building Service Air ring header falls below 70 psig.

Air is supplied to the Automatic Depressurization System (ADS) through the Instrument Air ring headers in the turbine and auxiliary building. These ring headers do not have automatic isolation features on low pressure. This precludes the loss of air supply to the ADS from inadvertent actuation of automatic isolation features. Check valves in the Instrument Air supply to the ADS prevent a back flow of air from the ADS into the Instrument Air ring headers in the turbine and auxiliary buildings in the event of low pressure in those headers. Low pressure in the ADS supply lines alarms in the main control room when the pressure falls below its required setpoint.

The control room emergency breathing air storage system is monitored and low pressure is alarmed in the main control room.

9.3.2 Process Sampling System

9.3.2.1 Design Bases

9.3.2.1.1 Safety Design Bases

The process sampling system is not required to ensure safe shutdown of the plant. The only sample line connected to the reactor pressure boundary is provided with isolation valves which close upon receiving a LOCA signal.

9.3.2.1.2 Power Generation Design Bases

The objective of the process sampling system is to monitor station operation and equipment performances and to provide information for making corrections or adjustments to process system operations. Representative liquid and steam samples are obtained through the sampling system either for on-line or laboratory analyses. On-line continuous radiation monitoring of gaseous and liquid processes is provided by equipment described in Section 11.5 and Subsection 12.3.4.

The sampling system is designed to minimize contamination of samples, minimize radiation exposure at the sample station and reduce sample line plate-out as much as possible.

9.3.2.2 System Description

The systems that require intermittent or continuous analytical sampling are located to permit the drawing of samples during normal station operation or shutdown periods. Sample take-off points are arranged to obtain valid and representative samples. On process lines 2-1/2 inches and larger, sample probes are inserted into the pipe whenever possible without causing a flow

restriction to obtain a representative sample except for liquid radwaste discharge radiation monitor 0PR40S where the sample probe is replaced by 1" diameter pipe. Wherever possible samples are taken at least 10 diameters downstream from the last input to the process line. Where the contents of a tank are recirculated, the sample is taken from the line downstream from the recirculation pump.

Sample lines are stainless steel, and are sized to deliver samples at a rate sufficient to maintain turbulent flow. The routing of sample lines will be as short and direct as possible to minimize purge volume but long enough to provide decay time where applicable. Fittings are minimized and bends are at least 15 diameters. Purge and some sample flow rates are read on a flow indicator and manually adjusted with a control valve by the operator at the sample panel. Purge time is determined by the operator to ensure adequate purging for representative samples.

As sample lines were installed, a record was made of the length of each. After they were installed, the volume of each sample line was calculated and the required flow and duration were determined to ensure sufficient purge of stagnant lines.

This information was incorporated into the CPS sampling procedures. To facilitate proper sample line purging, flow meters are installed in some sample lines at the sample panels. For those sample lines not provided with flow meters, administrative methods will be used to determine appropriate purge flow rates. (Q&R 281.3)

Sample lines which are equipped with continuous analyzers are provided with bypass lines for flushing. Those radwaste process lines which have a high particulate content are equipped with flush lines which purge the sample line with cycled condensate from the process connection to the sample panel.

A discussion of the post accident sampling and analysis system is contained in Appendix D. (Q&R 281.4)

9.3.2.3 Safety Evaluation

The sampling system is classified non-safety-related and non Seismic Category I in accordance with Section 3.2.

The process sampling system which does not connect to the reactor coolant pressure boundary is classified as Quality Group D from the sample sink up to the root valve located near the main process line. The root valve and piping upstream up to the connection on the main process line have the same classification as the process line except that process sample lines 3/4 inch NPS and smaller are not classified greater than Class B. The only sample line connected to the primary coolant pressure boundary is the reactor recirculation water sample line. That line is provided with two air-operated isolation valves, one located inside and one outside the drywell which receive an isolation signal. They fail closed on loss of air supply or electric power. For information regarding containment isolation, see Subsection 6.2.4. Other sample lines handling radioactive fluids are connected to nonreactor coolant pressure boundary systems and are provided with manual and/or solenoid operated valves. Air-operated valves will fail closed on loss of air or electric power. Grab sample lines for systems having a nominal pressure rating of 600 psi or higher are provided with two valves in series to reduce the potential for leakage.

Radioactive lines are routed to minimize radiation exposure to plant personnel. Where practical lines are routed near ceilings and away from accessible areas. High radiation lines in sample

panels are shielded to reduce radiation exposure to acceptable limits consistent with the plant access requirements including plant operation, shutdown, and maintenance.

9.3.2.4 Tests and Inspections

The process sampling system is proved operable by its use during normal plant operation. Grab samples are taken to calibrate and verify the proper operation of the continuous analyzers. Portions of the system normally closed to flow can be tested to ensure the operability and integrity to the system. Each sample line will be provided with isolation valve to permit testing and maintenance.

9.3.2.5 Instrumentation Application

Temperature indicators located after the sample heat exchangers, determine the sample temperature before it is analyzed and drawn in the sample sink. Pressure reducing devices and pressure relief valves are provided for certain high-pressure sample lines in order to protect the equipment and operators. Local pressure indicators are provided after each pressure reducing device.

Recorders are provided for on-line analyzers, to monitor fluid sample characteristics. Appropriate annunciators are furnished to indicate and alarm abnormalities in the sampling system. Recorders and annunciators are mounted on their respective local sampling panels for the secondary system sample panels, and on main control room panels for the reactor sample station. The local annunciators transmit alarm signals to the main control room.

In order to avoid flashing in sample lines containing saturated water, the lines are routed downward to their respective sample panel.

All gaseous samples are taken in accordance with ANSI N13.1-1969 and are explained further in Section 11.5.

High-temperature, high-pressure liquid and steam samples pass through primary coolers, pressure reducing and regulating devices (the reactor sample station utilizes two manual valves in series to reduce pressure and adjust flow), secondary coolers, and then to analyzers. Grab samples are taken after the primary coolers.

The temperature of the continuously analyzed conductivity samples at the reactor water sample station are maintained at 24°C to 26°C to minimize temperature compensation errors. Gas samples and other liquid process samples are also conditioned at their respective sampling stations.

Each sample station is furnished with an exhaust hood, sink, sample coolers, pressure regulators, demineralized water supply, analyzers, and necessary instrumentation. Where practical, most sample drains are recycled to their respective source or routed to the condenser hotwell. The balance of the sample drains are sent to the appropriate equipment or floor drain tanks for processing. Table 9.3-3 lists sample points, sample conditions, and types of analyses. The process sampling system is shown in Drawing M05-1045, Sheets 1 through 11.

9.3.3 Equipment and Floor Drainage System

9.3.3.1 Design Bases

9.3.3.1.1 Safety Design Bases

a. The equipment and floor drainage system (EFDS) is designed to preclude cross-flooding of nuclear safety-related ECCS compartments.

b. EFDS sump fill and pumpout rates are utilized for the detection of leakage from safety-related equipment or piping located in the drywell, containment, and the ECCS cubicle areas. This subject is addressed in detail in Subsections 5.2.5 and 7.6.1.4.

c. EFDS is not a safety-related system. However, all EFDS pipelines located within the Seismic Category I buildings are seismically supported to preclude potential damage to the safety system. EFDS piping penetrating drywell and containment structures is nuclear safety-related, designed in accordance with the ASME Section III Code, Class 2, and is provided with air-operated valves for containment and drywell isolation.

d. EFDS piping is designed to preclude inadvertent transfer of contaminated fluids to noncontaminated drainage systems by elimination of cross-connections of these systems.

e. Loop seals/traps are provided in drainage piping between the contaminated and general access areas for maintaining ventilation boundaries, and to prevent cross-contamination of room atmosphere.

f. Passive failures, i.e., pump seals and valve stem packing leaks, can be detected by the ECCS equipment room sumps. Leak detection sensitivity and alarm functions are discussed in detail in Subsection 5.2.5.

9.3.3.1.2 Power Generation Design Bases

The equipment and floor drainage system is designed to collect radioactive and potentially radioactive waste liquids from their points of origin in the drywell, containment, fuel building, auxiliary building, turbine building, radwaste building, and control building, and to transfer them to the collecting vessels of the radwaste treatment system for processing for reuse or disposal. For evaluation of radiological considerations for normal plant operation and for postulated spills and accidents see Sections 11.2 and 12.3.

The nonradioactive chemical waste liquids from the Makeup Demin Area are drained into a separate sump from which they are pumped out of the radwaste building to the reaction (waste neutralization treatment) tanks. The waste chemicals are then pH adjusted and sent to a sediment pond, either directly or via the makeup demineralizer floor drain sump. The waste water in the sediment pond is processed through the sediment pond filter house treatment facility prior to being discharged back into the lake.

9.3.3.2 System Description

9.3.3.2.1 General Description

Generally, all drainage originating from either the equipment or process piping and consisting of chemically clean water, is drained to the equipment drainage system. All waste liquids from the floors that may or may not be contaminated with oil or grease. (such as pump baseplates) are drained into the floor drainage system.

Special purpose drainage sumps/tanks are provided for draining chemical waste liquids emanating from high and low conductivity portions of the condensate polishing system, condensate filter, radwaste chemical waste area, laundry area, station laboratories, equipment decontamination, and personnel decontamination areas.

All these drainage systems are independent and physically separated. They collect waste liquids by gravity into sumps and/or tanks from where they are pumped to the appropriate liquid radwaste collecting tanks for further processing. The wastes from the demineralizer water makeup system are discharged to the waste sedimentation ponds. From there the wastes are pumped through waste treatment equipment in the demineralizer waste filter house and finally discharged into the cooling lake. The possible spillage from the diesel-generator oil tanks together with other nonradioactive equipment and floor drain waste is discharged into the storm sewer system via an oil separator. The drainage of these two types of nonradioactive wastes is arranged within structural barriers to preclude contamination from neighboring radioactive areas. Roof drainage is generally discharged to the storm sewer. Nonradioactive drains from the Auxiliary Building Ventilation Supply Air Cooling Coil, Containment Building Ventilation Supply Air Cooling Coil and Control Building Area Cooler 0WO08SM are discharged to the lake, via the Sewage Treatment System.

9.3.3.2.2 Component Description

a. Sumps and Sump Pumps

For general drainage each sump is fitted with two 100% capacity sump pumps. The pumps are designed to operate alternately to ensure their reliability. The initiation and the termination of pump operation is controlled by an alternating device. On "high" sump level, the alternator will start one pump. On high-high sump level, the alternator will start the second pump, boosting the total capacity to approximately 150% or more. On "low" sump level, the operating pump(s) will stop. In general, sumps and sump pumps are sized to handle all anticipated normal and transient draining requirements. The wastes from the floor drainage systems typically pass through the oil separators before entering the sumps. Oil substances are diverted to oil reservoirs.

The low conductivity sump is used as a receiver tank for filter backwash contents from the condensate filters in addition to the normal sump collection activities. The sump is equipped with a float level switch controller and modified level control circuitry for backwash operation. Prior to a filter backwash discharge to the sump, a sump pump down initiation signal is sent from the remote filter system. This starts one of the pumps to pump the sump down to the "low" level setpoint. This pump down allows enough sump capacity to receive the filter backwash discharge volume without exceeding the high-high sump level.

b. Water Seals

Traps are provided in EFDS piping where necessary to prevent airborne radioactive contamination from radioactive areas sharing the same drain piping system.

9.3.3.3 Safety Evaluation

The equipment and floor drain system is not required to assure either of the following conditions:

a. the integrity of the reactor coolant pressure boundary, or

b. the capability to shut down the reactor and maintain it in safe shutdown condition.

A failure analysis has not been provided since this system is not nuclear safety-related.

9.3.3.4 Tests and Inspection

The station equipment and drainage floor systems are proved operable during normal station operation. Preoperational tests of the systems were made by introducing water into the sumps and collecting tanks and observing the operation.

9.3.3.5 Instrumentation Application

Alternators are provided for each sump as described in Subsection 9.3.3.2.2.a. In addition, each sump contains a level detecting device which will actuate an annunciator in the main control room or radwaste operations center at high-high level. For sumps in ECCS and RCIC cubicles, two redundant high-high level switches are provided for the annunciation.

Handswitches are provided in the main control room for controlling sump pumps in the containment and drywell. For these sumps, low level switches are provided to stop the pumps on low sump level when in manual control.

For sumps in high radiation areas, local handswitches outside the high radiation area are provided for manual control of the sump pumps. For some sumps in general access areas, the alternator may be manually operated.

Floor and equipment drain tanks are provided with controls to start and stop the associated transfer pumps. The controls consist of an air bubbler type level sensing system. The system starts the pump on high tank level and stops the pump on low level. A local pump handswitch is provided for manual pump control.

Pressure gauges are provided locally at most sump and transfer pumps to monitor pump performance.

An elapsed run time meter is provided in the radwaste operations center for each sump pump whose discharge is routed to the liquid radwaste system. The meters are provided for operator information as to which sump(s) are having high inleakage. Pump timers for actuation of alarms are provided for leak detection as described in Subsection 5.2.5.

9.3.4 Chemical and Volume Control System

The Clinton Power Station is a boiling water reactor and therefore, this section is not applicable.

9.3.5 Standby Liquid Control System

9.3.5.1 Design Bases

9.3.5.1.1 Safety Design Bases

The standby liquid control system (SLCS) is an independent backup system for the control rod drive system. The standby liquid control system meets the following safety design bases:

a. Backup capability for reactivity control is provided, independent of normal reactivity control provisions in the nuclear reactor, to be able to shut down the reactor if the normal control ever becomes inoperative.

b. The backup system has the capacity for controlling the reactivity difference between the steady-state rated operating condition of the reactor with voids and the cold shutdown condition, including shutdown margin, to assure complete shutdown from the most reactive condition at any time in core life.

c. The time required to actuate the effect of the backup control is consistent with the nuclear reactivity rate of change predicted between rated operating and cold shutdown conditions. A scram of the reactor or operational control of fast reactivity transients is not specified to be accomplished by this system.

d. Means are provided by which the functional performance capability of the backup control system components can be verified periodically under conditions approaching actual use requirements. Demineralized water, rather than the actual neutron absorber solution, can be injected into the reactor to test the operation of all components of the redundant control system.

e. The neutron absorber is dispersed within the reactor core in sufficient quantity to provide a reasonable margin for leakage or imperfect mixing.

f. The possibility of unintentional or accidental shutdown of the reactor by this system shall be minimized. The system is designed to be a reliable safety system.

9.3.5.2 System Description

The standby liquid control system (See Drawing M05-1077, Figure 9.3-6, and Figure 9.3-7) is manually started from the main control room to pump a boron neutron absorber solution into the reactor if the operator believes the reactor cannot be shutdown or kept shut down with the control rods. The system is composed of the standby liquid control storage tank, the test water tank, the two positive displacement injection pumps, the two explosives valves, the two motor-operated pump suction valves, and associated local valves and controls and is located in the containment. The preferred flow path of the boron neutron absorber solution to the reactor vessel is by the HPCS sparger. The SLC piping is connected to the HPCS system just downstream of the HPCS manual injection isolation valve. An alternate flow path to the reactor

vessel is provided by the SLC sparger near the bottom of the core shroud. This flow path is normally locked out of service by the SLC manual injection valve.

The boron neutron absorber solution absorbs thermal neutrons and thereby terminates the nuclear fission chain reaction. The specified neutron absorber solution is sodium pentaborate ($Na_2B_{10}O_{16} \bullet 10H_2O$). It is prepared by dissolving sodium pentaborate decahydrate crystals in demineralized water. An air sparger is provided in the tank for mixing. To prevent system plugging, the tank outlet is located above the bottom of the tank.

The standby liquid control system is able to deliver enough sodium pentaborate solution into the reactor to assure reactor shutdown. This is accomplished by placing sodium pentaborate in the standby liquid control tank and filling the tank with demineralized water to at least the low level alarm point. The solution can be diluted with water up to a minimum concentration of 10.8 wt.% to allow for evaporation losses or to lower the solubility/saturation temperature.

The allowable concentration of the sodium pentaborate within the tank is dependent upon the solution volume, per Technical Specification 3.1.7, Figure 3.1.7-1. The minimum temperature of the fluid in the tank and piping (70°F per Technical Specifications) ensures that the sodium pentaborate remains in solution throughout the entire range of concentrations, as seen from Figure 9.3-7. The equipment containing the solution is installed in the containment in which the air temperature is to be maintained within the range of 65°F to 104°F during normal plant operation. An electrical resistance heater system provides a backup heat source which maintains the solution temperature between 75° F and 85° F to prevent precipitation of the sodium pentaborate from the solution during storage. High or low liquid temperature or high or low liquid level cause an alarm to be annunciated in the control room.

Each positive displacement pump is sized to inject the solution into the reactor at a rate of 43 gpm. (41.2 gpm. minimum). To prevent bypass flow from one pump in case of relief valve failure in the line from the other pump, a check valve is installed downstream from each relief valve line in the pump discharge pipe.

The two explosive-actuated injection valves provide assurance of opening when needed and ensure that boron will not leak into the reactor even when the pumps are being tested. Each explosive valve is closed by a plug in the inlet chamber. The plug is circumscribed with a deep groove so the end will readily shear off when pushed with the valve plunger. This opens the inlet hole through the plug. The sheared end is pushed out of the way in the chamber; it is shaped so it will not block the ports after release.

The shearing plunger is actuated by an explosive charge with dual ignition primers inserted in the side chamber of the valve. Ignition circuit continuity is monitored by a trickle current, and an alarm occurs in the control room if either circuit opens. Indicator lights show which primary circuit opened.

The standby liquid control system is actuated by both of the two keylocked, spring-return switches on the control room benchboard. The keylocked feature assures that changing the system status is a deliberate act. Changing either switch status to "run" starts an injection pump, actuates an explosive valve, opens a tank outlet valve, and closes one reactor cleanup system isolation valve to prevent loss or dilution of boron.

A green light in the control room indicates that power is available to the pump motor contactor and that the contactor is deenergized (pump not running). A red light indicates that the

contactor is energized (pump running). Instrumentation consisting of solution temperature indication and control, solution level, and heater system status is provided locally at the storage tank. Table 9.3-4 contains the process data for the various modes of operation of the SLC.

Storage tank liquid level, tank outlet valve position, pump discharge pressure, and loss of continuity on the explosive valves indicate that the system is functioning. The control room keyswitches may actuate the standby liquid control system, regardless of the position of the control switches on the local panel in the containment. Pump discharge pressure and valve status are indicated in the control room.

Should the boron solution ever be injected into the reactor, either intentionally or inadvertently, then after making certain that the normal reactivity controls will keep the reactor subcritical, the boron is removed from the reactor coolant system by flushing for gross dilution followed by operating the reactor clean up system. There is very little effect on reactor operation when the boron concentration has been reduced below approximately 50 ppm, except near end of cycle condition.

Equipment drains and tank overflow may be routed to separate drums that can be removed and disposed of independently to prevent any trace of boron from inadvertently reaching the reactor. Alternatively, this drainage and overflow may be routed to the radwaste system where boron is removed and clean effluent returned to the cycled condensate system.

9.3.5.3 Safety Evaluation

The standby liquid control system is designed to bring the reactor from rated power to a cold shutdown at any time in core life, with the control rods remaining withdrawn in the rated power pattern. It includes the reactivity gains that result from complete decay of the rated power xenon inventory. It also includes the positive reactivity effects from eliminating steam voids, increasing water density due to cooling, reduced Doppler effect in uranium, reducing neutron leakage, and decreasing control rod worth as the moderator cools.

The standby liquid control system is maintained in an operable status whenever the reactor is critical. The system is not expected to be needed for safety reasons because of the large number of independent control rods available to shut down the reactor.

However, to assure the availability of the SLC system, two sets of the components required to actuate the system, pumps and explosive valves, are provided.

The minimum average concentration of natural boron in the reactor to provide adequate shutdown margin is 1000 ppm. An evaluation of the standby liquid control system capability is performed each cycle utilizing the reload core configuration. The results of this evaluation for the current cycle are provided in Appendix 15D, Reload Analysis. Calculation of the minimum quantity of sodium pentaborate to be injected into the reactor is based on the required 1000 ppm average boron concentration in the reactor coolant including the water volume in the residual heat removal shutdown cooling piping and in the recirculation loop piping, at 68° F and reactor normal water level. The increase in the isotopic concentration of the boron ($\geq$30 atom % boron 10) in the SLC tank produces an equivalent 1000 ppm in the reactor vessel at 68°F. The result is increased by 25% to allow for imperfect mixing and leakage. Additional sodium pentaborate is provided to accommodate dilution by the RHR system in the shutdown cooling mode. This concentration is achieved when the solution is prepared as defined in Subsection 9.3.5.2 and maintained above saturation temperature.

The specified boron injection rate is limited to the range of 8 to 20 ppm per minute. The lower rate assures that the boron is injected into the reactor in approximately 2 hours. This resulting negative reactivity insertion is considerably greater than positive reactivity caused by the cooldown. The upper limit injection rate assures that there is sufficient mixing so that boron does not recirculate through the core in uneven concentrations that could possibly cause reactor power to rise and fall cyclically.

The essential system equipment for injection of neutron absorber solution into the reactor is designed as Seismic Category I to withstand the specified earthquake loadings (see Chapter 3). The system piping and equipment is designed, installed, and tested in accordance with requirements stated in Section 3.7.

The system is required to be operable in the event of a plant offsite power failure; therefore the pumps, valves, and controls are connectable to the standby a-c power supply. Heaters are powered by normal non-Class 1E power source. The pumps and valves are powered and controlled from separate buses and circuits so that a single-failure will not prevent system operation.

The standby liquid control system and pumps have sufficient pressure margin to assure solution injection up to the system relief valve setting of approximately 1400 psig. The nuclear system relief and safety valves begin to relieve pressure above approximately 1100 psig. Therefore, the standby liquid control system positive displacement pumps cannot overpressurize the nuclear system.

9.3.5.3.1 Evaluation Against General Design Criteria

The standby liquid control system is evaluated against the applicable general design criteria as follows:

a. Criterion 2

The standby liquid control system is located in the area outside of the drywell in primary containment and below the refueling floor. In this location it is protected by the containment and compartment walls from external natural phenomena such as earthquakes, tornadoes, hurricanes, floods, and internally from effects of such events and as well as other postulated internal events (e.g., DBA-LOCA).

b. Criterion 4

The standby liquid control system is designed for the expected environment in the containment and specifically for the compartment in which it is located. In this compartment, it is not subject to the more violent conditions postulated in this criterion such as missiles, whipping pipes, and discharging fluids.

c. Criterion 26

The recirculation flow control system is the second reactivity control system required by this criterion (see Subsection 5.4.1.4.1).

d. Criterion 27

This criterion applies no specific requirements to the standby liquid control system, and therefore is not applicable. See the general design criteria section for discussion of combined capability.

e. Criterion 29

The standby liquid control system pumps and valves outboard of the isolation valves are redundant. Two suction valves, two pumps, and two injection valves are arranged and crosstied such that operation of either one of each results in successful operation of the system. The standby liquid control system also has test capability. A special test tank is supplied for providing test fluid for the injection test. Pumping capability and suction valve operability may be tested at any time. A trickle current continuously monitors continuity of the firing mechanisms of the injection squib valves.

9.3.5.3.2 Evaluation Against Regulatory Guides

The standby liquid control system is evaluated against the applicable regulatory guides as follows:

a. Regulatory Guide 1.26

Because the standby liquid control system is a reactivity control system, all mechanical components are at least Quality Group B. Those portions which are part of the reactor coolant pressure boundary are Quality Group A. This is shown in Table 3.2-1 Section V.

b. Regulatory Guide 1.29

All components of the standby liquid control system which are necessary for injection of neutron absorber into the reactor are Seismic Category I. This is shown in Table 3.2-1.

Since the standby liquid control system is located within the primary containment, it is adequately protected from flooding, tornadoes, and internally and externally generated missiles. SLCS equipment is protected from pipe break by providing adequate distance between the seismic and nonseismic SLC system equipment where such protection is necessary. In addition, appropriate distance is provided between the SLCS and other piping systems. It should be noted that standby liquid control is not required to provide a safety function during any postulated pipe break events. This system is only required under an extremely low probability event where all of the control rods are assumed to be inoperable while the reactor is at normal full power operation. Therefore, the protection provided is considered over and above that required to meet the intent of Branch Technical Positions APCSB 3-1 and MEB 3-1.

This system is used in some special plant capability demonstration events cited in Appendix 15A, specifically Events 51 and 53 which are extremely low probability non-design basis postulated incidents. The analyses given there are to demonstrate additional plant safety consideration far beyond reasonable and conservative assumptions.

A system level, qualitative-type failure mode and effects analysis relative to this system's ability to meet single failure criterion is discussed in Subsection 7.4.2.2.

9.3.5.4 Testing and Inspection Requirements

During a refueling or maintenance outage, the injection portion of the system can be functionally tested by valving the suction line to the test tank and actuating the system from the control room. The test tank contains demineralized water for approximately 3 minutes of pump operation. System operation is indicated in the control room. After functional tests, the injection valve shear plugs and explosive charges must be replaced and all the valves returned to their normal positions as indicated.

Testing of the SLC pumps without firing the explosive primers may be accomplished by the use of locally mounted control switches. Operation of a pump in the test mode does not prevent a manual initiation of boron injection from the control room, should it be required.

After closing a local locked-open valve to the reactor, leakage through the injection valves can be detected by opening valves at a test connection in the line between the drywell isolation check valves. Leakage from the reactor through the first check valve can be detected by opening the same test connection in the line between the drywell isolation check valves when the reactor is pressurized.

The concentration of the sodium pentaborate in the solution tank is determined periodically by chemical analysis. The pump suction piping temperature is checked periodically to verify the temperature is high enough to prevent precipitation.

The standby liquid control system preoperational test is described in Subsection 14.2.12.1.3.

9.3.5.5 Instrumentation Requirements

The instrumentation and control system for standby liquid control is designed to allow the injection of a boron neutron absorber solution into the reactor and to maintain the solution well above the saturation temperature. A further discussion of the standby liquid control instrumentation may be found in Section 7.4.

9.3.6 Suppression Pool Cleanup System

9.3.6.1 Design Bases

9.3.6.1.1 Safety Design Bases

The suppression pool cleanup system (SPCUS) serves no safety function. Failure of the system will not compromise any safety-related systems or prevent safe shutdown of the plant.

Containment penetrations, including associated piping and valves up to the isolation valves are designed to Seismic Category I and ASME Code, Section III, Class 2 requirements. The remaining piping and valves, including those common with the fuel pool cooling and cleanup and condensate cleanup systems, are classified non safety.

9.3.6.1.2 Power Generation Design Bases

During normal plant operation, the suppression pool cleanup system is designed to provide continuous cleanup of the suppression pool water at a rate of 1000 gpm through one of three standby fuel pool cleaning and cleanup filter demineralizers.

When required, the system is capable of providing cleanup of the suppression pool water at a rate of 3500 gpm.

The system is designed to maintain the suppression pool water quality compatible with ECCS vessel makeup and containment spray requirements.

The system is designed to remove radioactive iodine from the suppression pool water following a Safety/Relief Valve (SRV) blowdown at a rate sufficient to allow normal access for plant personnel to the containment within a reasonable time after the blowdown.

9.3.6.2 System Description

The primary purpose of the SPCU system is to remove radioactive contaminants, including iodine, from the containment suppression pool water and to maintain the suppression pool water quality to meet plant operation requirements.

There are two modes of operation for the suppression pool cleanup system, and they are defined by the flow path of the water to be cleaned. Since leakage through the safety/relief valves during normal operation causes radioactive iodine to accumulate in the suppression pool, the system is operated to minimize personnel exposure during containment access. This may be done continuously or on an "as required" basis to maintain airborne radioiodine in the containment below the Derived Air Concentration (DAC). A non-safety related plate heat exchanger, cooled by the WO system, may be placed in service in parallel with the deminerializers to cool the suppression pool.

During normal operation, either of the two suppression pool cleanup transfer pumps takes suction from the suppression pool, transferring pool water through the SPCU system piping and then to the inlet of the fuel pool cooling and cleanup filter-demineralizers. The fuel pool cooling and cleanup filter-demineralizers remove iodine and other impurities from the water. The processed water is then returned to the suppression pool.

The design-basis transient for the SPCU system is a MSIV isolation event at power. Following a SRV blowdown, both transfer pumps may be operated to process suppression pool water through the fuel pool cooling and cleanup filter-demineralizers.

Four filter-demineralizers are installed, one of which will normally be in use in the FPC&C system. Therefore, three filter-demineralizers are available for suppression pool cleanup. This condition allows suppression pool water to be processed at a maximum flow rate of 3000 gpm.

The RHR heat exchangers are available for cooling the suppression pool if the pool water exceeds the upper temperature limit of the filter-demineralizers.

When the maximum suppression pool cleanup flow rate is desired or when the fuel pool cleanup system is unavailable for suppression pool cleanup, the condensate cleanup system may be used. Both transfer pumps operate to process 3500 gpm through one condensate

demineralizer vessel and back to the suppression pool. Connections are made to only one condensate polisher to reduce the possibility of mixing suppression pool water with the condensate feedwater.

The suppression pool cleanup system consists of piping, valves, equipment and instrumentation as shown in Drawing M05-1060. The suppression pool cleanup transfer pumps are the only unique major components of the SPCU system. Refer to Drawings M05-1037 and M05-1007 for interconnection with the fuel pool cooling and cleanup and condensate cleanup systems.

9.3.6.3 Safety Evaluation

The suppression pool cleanup system has no nuclear safety-related function as defined in Section 3.2. Failure of the system will not compromise any safety-related system or component and will not prevent safe reactor shutdown.

The system incorporates features that assure reliable operation over the full range of normal plant operations. These features consist primarily of instrumentation which monitors and/or controls its respective processes.

Piping and valves, on both the suction and discharge legs, from the suppression pool to the motor-operated isolation valves outside the containment, form a part of the containment boundary and are classified as Safety Class 2, Seismic Category I. The remaining piping and components of the system are classified as nonsafety.

9.3.6.4 Tests and Inspections

NOTE: The following paragraph is historical:

All Class B piping and components, as described in Section 3.2, are hydrostatically tested prior to plant startup. Nondestructive testing is performed in accordance with the ASME Section III Code, Class 2 requirements where applicable.

The suppression pool cleanup system is proven operable by its use during normal plant operation.

9.3.6.5 Instrumentation Application

The operation of the suppression pool cleanup system valves and pumps is controlled from the main control room by their respective selector and control switches. Locally mounted gauges provide the capability to monitor the differential pressure across the pump suction strainers and to monitor the pump discharge pressure.

9.3.7 Post Accident Sample System (PASS)

9.3.7.1 Design Basis

9.3.7.1.1 Safety Design Basis

The PASS serves no safety function. Failure of the system will not compromise any safety-related systems or prevent safe shutdown of the plant.

Containment penetrations, including associated piping and valves up to and including the isolation valves are designed to safety-related, Seismic Category I and ASME Code, Section III, Class 2 requirements. The remaining piping and valves are classified non-safety.

9.3.7.1.2 Power Generation Design Basis

The Post Accident Sampling System may be used to obtain highly radioactive samples of reactor coolant, suppression pool and containment atmosphere. Regulatory Requirements which had been associated with the design basis of the panel (NUREG-0737 and Reg Guide 1.97) have been eliminated per Clinton Power Station License Amendment 155. The PASS is considered a commercial grade sample station.

Accident conditions assume a Regulatory Guide 1.3 release of fission products.

The sampling system is designed to minimize contamination of samples, minimize personnel radiation exposure at the sample station, minimize volume of fluid removed from containment, and minimize plate-out.

9.3.7.2 System Description

The PASS consists of two panels; a sample analysis panel (SAP) and a sample monitor panel (SMP) located in the diesel generator building at El. 737 ft. 0 in. The panels are located close to the containment building to minimize radiation exposure during sampling and purge time. The sample lines are stainless steel. The system is shown in Drawing M05-1045-12.

The SAP is divided into two sections, one for liquids and one for gases. The liquid sample routed to the panel consist of:

1. Reactor coolant via a reactor vessel jet pump instrument line

2. RHR Pump 1A or 1B Effluent (Reactor Coolant or Suppression Pool Water)

NOTE: Drywell and Containment Equipment and Floor Drain sump sample lines are also supplied but are not normally utilized.

The gas samples routed to the panel consist of:

1. Containment Atmosphere (2 sample locations at El. 740 ft. 0 in. and 790 ft. 0 in.)

2. Drywell Atmosphere (2 sample locations at El. 740 ft. 0 in. and 790 ft. 0 in.)

Only one gas sample and one liquid sample can be taken and analyzed at a time. Table 9.3-5 lists the sample points, sample conditions and types of analyses.

The operator has control and indication of the sampling process at the SMP. This panel is provided with a color coded mimic flow diagram indicating all remote operated valve locations and statuses, analyzer locations, process pressures, and sample flow paths. Isolation valves for sample lines penetrating containment are the only valves with their status indicated but not controlled at the SMP. These valves are controlled by the operator in the Main Control Room.

The SAP is also provided with a mimic which includes manually operated hand valves used to route sample flows within the SAP.

Liquid Sampling

When a liquid sample is routed to the SAP, it is cooled and passed near a radiation detector to inform the operator at the SMP of the radiation level.

The SAP will provide access to liquid grab samples collected in a portable, lead shielded, sealed vial. The panel is shielded to protect personnel when taking a grab sample such that resulting radiation exposure is below the levels specified in GDC-19.

Off-line radionuclide analysis can be performed on liquid samples (at an offsite lab). Liquid sample analysis may be performed to quantify iodines and cesiums which indicate high fuel temperature, and nonvolatile isotopes which indicate fuel melting. A liquid sample may also be analyzed for boron content and chloride concentration.

The reactor coolant sample for the PASS may be obtained from a reactor jet pump instrumentation sensing line until the reactor is depressurized. After the reactor is depressurized, the reactor coolant sample may be taken from either RHR A or RHR B pump discharge to assure that a sample representative of the core condition is obtained.

During normal operation, a liquid sample may be taken at the sample sink. The sink drain and line pressure relief valve drain to the fuel building floor drain tank. When high level radiation is present, the liquid sample return is directed to the suppression pool. The operator at the SMP selects the valves to open or close to determine the appropriate path, and the control room operator controls the containment isolation valves.

A suppression pool sample can be taken when a RHR pump is on and suction is taken from the suppression pool, such as during the suppression pool cooling mode, or low pressure coolant injection mode.

The sample lines are flushed with demineralized water (except during loss of offsite power) to minimize plate out and contamination of the next sample. The flushing water is manually routed to the fuel building floor drain tank when radiation levels are low and to the suppression pool when levels are high.

Gas Sampling

Gas samples are passed near a radiation detector to inform the operator at the SMP of the radiation level. Gases from the drywell and containment are obtained at the gas section of the SAP manually by opening a valve which injects the gas via a hypodermic needle into a vial. The unused gas is returned to containment.

After a sample has been taken, the operator purges the system to clear the lines and eliminate contamination of the next gas sample taken. Purging gas is returned to containment.

A separate system, the containment monitoring system, will be used for on-line hydrogen and oxygen analysis.

PASS provides a grab sample capability for offline analysis of the containment and drywell atmosphere.

Heat tracing of gas sample lines is provided to minimize condensation and plugging or losing soluble gases.

Off-line radionuclide analysis can be performed on drywell atmospheric and containment atmospheric samples. Drywell and containment analysis may be performed to quantify the noble gases which indicate cladding failure.

See Table 7.1-13 and Appendix D, Item II.B.3 for additional information on post-accident sampling capabilities.

9.3.7.3 Safety Evaluation

The PASS is classified non-safety-related and non-seismic, except for the containment isolation portion of the system. In the event of a containment isolation signal, the containment isolation valves that supply samples to the PASS panel and the return valves to containment from the PASS close automatically. In order for a sample to be taken, the operator in the Main Control Room must open the appropriate containment isolation valves on the sample and return lines by bypassing the containment isolation signal. This bypass switch can only be operated with a key. A main control room annunciator is initiated whenever this switch is in the bypass position.

All other control of the PASS is provided at the PASS local panels.

The SAP is provided with shielding. Any gases vented within the panel are removed by the Auxiliary Building HVAC system during normal operation and by the drywell purge system after a LOCA. The latter ventilation system is provided with charcoal absorbers and HEPA filters. The PASS and the HVAC systems are designed to limit radiation exposure to levels specified in GDC-19.

The PASS is designed to be supplied with emergency power. Loads in the PASS are electrically isolated from the diesel generator bus in the event of a LOCA through either a shunt trip or two fuses or circuit breakers in series as described in Subsection 8.1.6.1.14. Power is restored to the PASS when the operator, through administrative procedures, manually bypasses the LOCA shunt trip signal.

9.3.7.4 Deleted

9.3.7.5 Deleted

9.3.7.6 Instrumentation Application

The PASS is provided with local pressure, temperature, and flow gauges to check the operation of the system. Alarms such as sample cooling water flow, sample effluent temperature from coolers, etc., are annunciated on the local panel. Indicating lights on the local panel are provided for all hand switch controlled valve positions, including the containment isolation valves, and all pump motors. Indicating lights are provided to show the position of the probe which injects high radiation liquid samples into the shielded portable cart.

The SMP is provided with two annunciators for high radiation level in the liquid and gaseous sampling lines. Heat tracing is provided for the containment and drywell gas samples.

TABLE 9.3-1
COMPRESSED AIR SYSTEM COMPONENT DATA

SERVICE AIR COMPRESSORS	
Quantity	3
Capacity, each ICFM	2500
Discharge Pressure, psig	110
Discharge Temperature, °F	120
Efficiency, %	71
Driver Voltage, Volts	4000
Driver, hp	600
Motor Speed (rpm)	3560

Two volume tanks of 660 gallons each are located in the compressor discharge piping for moisture removal upstream of the service air dryer/filter package.

SERVICE AIR DRYER/FILTER PACKAGE	
Quantity	3
Dryer Type	Dual Chamber Desiccant
Desiccant Type	Activated Alumina
Vessel Design Pressure	150 psig
Rated Inlet Flow	2100 scfm
Rated Discharge Flow	1836 scfm
Guaranteed Dew Point	-40° F at 115 psig
Prefilters per Package	1
Prefilter Rated Flow	2772 scfm
Number of Prefilter Cartridges	21
Prefilter Removal Rating	
98% Removal Rating	0.04 microns
100% Removal Rating	0.6 microns
Nominal Rating	0.04 microns
Prefilter Vessel Design Pressure	150 psig
Afterfilters per Package	1
Afterfilter Rated Flow	2772 scfm
Number of Filter Cartridges	21

TABLE 9.3-1
COMPRESSED AIR SYSTEM COMPONENT DATA (Continued)

Afterfilter Removal Rating	
98% Removal Rating	0.07 microns
100% Removal Rating	0.9 microns
Nominal Rating	0.07 microns
Afterfilter Vessel Design Pressure	150 psig
MAKEUP WATER PUMP HOUSE AIR RECEIVERS	
Quantity	1 - Service Air 1 - Instrument Air
Capacity	11 ft^3
Design Temperature	120° F
Design Pressure	150 psig
SCREEN HOUSE AIR RECEIVERS	
Quantity	1 - Service Air 1 - Instrument Air
Capacity	11 ft^3
Design Temperature	120° F
Design Pressure	150 psig
IA Storage Bottle Secondary Filters	
Quantity	2
Capacity	30 SCFM each (min.)
Housing Design Pressure	2500 psig (min.)
100% Removal Rating	0.1-50 micron
MSIV Secondary IA Filters	
Quantity	2
Capacity	3000 SCFM each
Housing Design Pressure	150 psig
100% removal rating	23 microns

TABLE 9.3-1
COMPRESSED AIR SYSTEM COMPONENT DATA (Continued)

ADS AIR AMPLIFIERS	
Quantity	12
Type	Double Acting
Capacity, scfm	20
Outlet Pressure, regulated, psig	160
ADS COMPRESSED AIR STORAGE BOTTLES	
Quantity	16
Type	High Pressure Cylinders
Capacity	264 scf/cylinder
Design Pressure, psig	4000

TABLE 9.3-2
COMPRESSED AIR SYSTEM FAILURE ANALYSIS

COMPONENT	FAILURE	COMMENTS
Service Air Compressor	Loss of Compressor	Three service air compressors are installed. Normally one is running, another in standby to autostart on low air header pressure, and the third in PULL-TO-LOCK, where it may be manually started. Additional protection is provided by utilizing air receiver tanks and equipping nuclear safety-related air component systems with individual accumulators. The air accumulators are of sufficient capacity to safely perform their shutdown function in the event that the air supply system is lost.
Instrument Air Amplifier 160 psig, ADS Valve Operation	Loss of Compressor	Twelve air amplifiers are provided for 100% redundancy. Also, storage bottles are provided and each ADS valve has its own air accumulator with sufficient capacity to safely shutdown the unit.

TABLE 9.3-3

PROCESS SAMPLE TABULATION

NO.	SAMPLE PANEL	SAMPLE IDENTIFICATION	OPERATING CONDITIONS Max. Operating Press (psig)	Max. Operating Temp (°F)	Design Press (psig)	Design Temp (°F)	SAMPLING CAPABILITY	Activity (Note 1)	REMARKS
1C1	1G33-Z020 (Reactor Sample Station)	Reactor Water Recirculation	1325	554	1550	575	1. Grab Sample 2. On-line Conductivity 3. On-line Dissolved O_2	H	
1C2		Reactor Water Cleanup Inlet Header	1208	120	1410	150	1. Grab Sample 2. On-line Conductivity 3. On-line Dissolved O_2	H	
1C3A 1C3B		Reactor Water Cleanup Demineralizer 1A & 1B Outlet	1141	120	1410	150	1. Grab Sample 2. On-line Conductivity	L	
1C4		Control Rod Drive	1860	135	2000	140	1. Grab Sample 2. On-line Conductivity 3. On-line Dissolved O_2		
1T2A thru D	1PL22J (Hotwell Process)	Condenser	-14	130	014.7	212	1. Grab Sample 2. On-line Conductivity	H	Eductors required
1T15		Cond. Storage Tank	30	100	50	150	Grab sample only	L	
1T16		Makeup Cond. Storage Tank	30	90	50	90	Grab sample only	L	
1T18		Circulating Water	30	105	30	105	Grab sample only	L	
1T19A 1T19B 1T19C 1T19D 1T19E 1T19F	1PL32J (Turbine Bldg. Process)	Condensate Filter A, B, C, D, E, F Effluent	220	135	275	140	Grab sample only	L	
1T12A 1T12B		Feedwater Heater Drain 2A & 2B	15	175	100	350	Grab sample only	M	Eductors required
1T13A		Feedwater Heater Drain 1A	-8	175	50	300	Grab sample only	M	Eductors required
1C6A 1C6B	1PL33J (Aux. Bldg. Process)	Component Cool. Water HX 1A & 1B Outlets	100	105	140	150	Grab sample only	L	
1C8A 1C8B		RHR Heat Exchng. 1A & 1B Outlet	381	300	500	358	Grab sample only	H	
1C9		RHR System Flush to Radwaste	25	148	125	200	Grab sample only	M	

TABLE 9.3-3
PROCESS SAMPLE TABULATION (Continued)

NO.	SAMPLE PANEL	SAMPLE IDENTIFICATION	OPERATING CONDITIONS Max. Operating Press (psig)	Max. Operating Temp (°F)	Design Press (psig)	Design Temp (°F)	SAMPLING CAPABILITY	Activity (Note 1)	REMARKS
1R4	0PL33JA (Radwaste Bldg. Process)	Unit 1 Flr Drn Surge Tank Recirc Line	130	140	160	180	Grab sample only	M	
1R3		Unit 1 Flr Drn Collector Tank Recirc Line	130	140	160	180	Grab sample only	M	
1R5		Unit 1 Flr Drn Evap Feed Tank Recirc. Line	90	140	115	180	Grab sample only	M	
1R7 2R7		Unit 1 & 2 Chemical Wast Coll. Tank Recirc.	85	140	115	180	Grab sample only	H	
1R8 2R8		Unit 1 & 2 Chemical Wast Proc Tank Recirc	85	140	115	180	Grab sample only	H	
1R13 2R13		Unit 1 & 2 FP Demin Sludge Tk Slurry Recirc	100	120	150	150	NONE	H	Sample lines capped.
1R15 2R15		Unit 1 & 2 Flr Drn Evap Recirc Line	30	227	60	300	Grab sample only	H	
1R16 2R16		Unit 1 & 2 Flr Drn Evap Distillate	50	130	75	195	Grab sample only	L	
0R8		Spent Resin Tank Slurry Recirc Line	100	120	140	150	Grab sample only	H	
0R9A 0R9B		Waste Sludge Tank A & B Slurry Recirc Line	100	120	150	150	NONE	H	Sample lines capped
0R12		Chem Waste Evap Recirc	7	227	10	300	Grab sample only	H	
0R2A 0R2B 0R2C		Waste Demin A, B, & C Effluent Lines	155	140	233	210	Grab sample only	H	
0R1A 0R1B 0R1C		Waste Filter A, B, & C Effluent Lines	155	120	235	140	Grab sample only	H	
		Reboilers A & B	5	95	25	150	Grab sample only	L	

TABLE 9.3-3
PROCESS SAMPLE TABULATION (Continued)

NO.	SAMPLE PANEL	SAMPLE IDENTIFICATION	OPERATING CONDITIONS Max. Operating Press (psig)	Max. Operating Temp (°F)	Design Press (psig)	Design Temp (°F)	SAMPLING CAPABILITY	Activity (Note 1)	REMARKS
0R6A 0R6B	0PL33JB (Radwaste Bldg Process)	Laundry Drain Coll Tank A&B Recirc Line	40	105	60	180	Grab sample only	L	
0R7A 0R7B		Laundry Drain Sample Tank A&B Recirc Line	70	100	105	150	Grab sample only	L	
2R3		Unit 2 Flr Drn Coll. Tk	130	140	160	180	Grab sample only	M	
2R4		Unit 2 Flr Drn Surge Tk	130	140	160	180	Grab sample only	M	
2R5		Unit 2 Flr Drn Evap Feed Tk	90	140	115	180	Grab sample only	M	
1R1 2R1		Unit 1 & 2 Waste Collector Tank	155	120	235	140	Grab sample only	H	
1R9 2R9		Unit 1 & 2 Phase Separator Slurry Recirc	100	120	150	150	NONE	H	Sample lines capped.
0R17A 0R17B		Aux Steam Reboiler A & B Individual Discharge Line	85	328	150	366	Grab sample only	L	
1R2 2R2		Unit 1 & 2 Waste Surge Tank Recirc	155	120	235	140	Grab sample only	H	
		Aux Steam Electrode Boilers	110	345	150	365	Grab sample only	L	
0R16		Reboiler Discharge Header	85	328	150	366	1. Grab sample 2. On-line Conductivity	L	On-line conductivity no longer actively in use.
0R18		Auxiliary Steam Deaerator	120	300	200	388	1. Grab sample 2. On-line Dissolved O_2 3. On-line pH	L	On-line oxygen & pH no longer actively in use.
0R19		Radwaste Return to Cond Storage Tank					1. Grab sample 2. On-line Conductivity	L	On-line conductivity no longer actively in use.

TABLE 9.3-3
PROCESS SAMPLE TABULATION (Continued)

NO.	SAMPLE PANEL	SAMPLE IDENTIFICATION	OPERATING CONDITIONS Max. Operating Press (psig)	Max. Operating Temp (°F)	Design Press (psig)	Design Temp (°F)	SAMPLING CAPABILITY	Activity (Note 1)	REMARKS
1R6 2R6	0PL33JC (Radwaste Bldg Process)	Unit 1 & 2 Flr Drn Evap Monitor Tank	85	130	100	195	Grab sample only	L	
0R3A 0R3B 0R3C		Waste Sample Tank A, B, & C Recirc Line	60	140	90	210	Grab sample only	H	
0R4A 0R4B		Excess Wtr Tank A&B Recirc Line	60	140	90	210	Grab sample only	L	
0R5		Chem Waste Evap Mon Tank	75	130	100	195	Grab sample only	L	
0R11A 0R11B		Concentrated Waste Tank A & B Recirc Line	110	180	150	250	Grab sample only	H	
0R13		Chem Waste Evap Distillate	50	130	75	195	Grab sample only	L	
1R10A 1R10B	0PL33JD (Radwaste Bldg Process)	Fuel Pool Filter Demin. Individual Effluent 1A,1B	110	120	155	150	Grab sample only	L	
2R10A 2R10B		Fuel Pool Filter Demin. Individual Effluent 2A,2B	110	120	155	150	Grab sample only	L	
1R11		Fuel Pool Filter Demin. Inlet Header	110	120	1550	150	Gram sample only	M	
1R12		Supp Pool Inlet Header to Fuel Pool Fltr Demin	101	95	150	150	Grab sample only	M	
1C7AA	1PL42J (Contain. Bldg Sample Panel)	Comp. Cool. Wtr Inlet Non. Reg. HX 1A	100	105	140	150	Grab sample only	L	
1C7AB		Comp. Cool. Wtr Outlet Non. Reg. HX 1A	100	120	140	150	Grab sample only	L	
1C7BA		Comp. Cool. Wtr Inlet Non. Reg. HX 1B	100	105	140	150	Grab sample only	L	
1C7BB		Comp. Cool. Wtr Outlet Non. Reg. HX 1B	100	120	140	150	Grab sample only	L	
1C5	None	Standby Liquid Control System	14.7	100	24	185	Grab sample only	L	Grab samples from tank and pump suction.

TABLE 9.3-3
PROCESS SAMPLE TABULATION (Continued)

NO.	SAMPLE PANEL	SAMPLE IDENTIFICATION	OPERATING CONDITIONS Max. Operating Press (psig)	Max. Operating Temp (°F)	Design Press (psig)	Design Temp (°F)	SAMPLING CAPABILITY	Activity (Note 1)	REMARKS
1T3	1PL88J (Feedwater Sample Panel)	Condensate Pump Discharge Header	210	135	275	140	1. Grab Sample 2. On-line Conductivity 3. On-line Dissolved O_2 4. On-line Sodium	M	On-line sodium no longer actively in use.
1T4		Condensate Demineralizer Inlet Header	210	135	275	140	1. Grab Sample 2. On-line Conductivity	L	
1T5A thru J		Condensate Demineralizer Individual Effluent 1A thru 1J	210	135	275	140	1. Grab Sample 2. On-line Conductivity	L	
1T6		Condensate Demineralizer Outlet Header	210	135	275	140	1. Grab Sample 2. On-line Conductivity 3. On-line Dissolved O_2 4. On-line Sodium	L	On-line sodium no longer actively in use.
1T7		Feedwater	2100	425	2200	450	1. Grab Sample 2. On-line Conductivity 3. On-line Dissolved O_2	L	
1T8A 1T8B		Feedwater Heater Drain 6A & 6B	350	400	400	450	Grab sample only	L	
1T9A 1T9B		Feedwater Heater Drain 5A & 5B	225	350	300	450	Grab sample only	M	
1T10A 1T10B		Feedwater Heater Drain 4A & 4B	125	315	150	450	Grab sample only	M	
1T17		Turbine Bldg Closed Cool Wtr	83	105	150	150	Grab sample only	L	

Note: 1. The potential activity levels are as follows:
H: Activity >0.1 Ci/ml
M: 10-3 Ci/ml<Activity<0.1 Ci/ml
L: Activity < 10-3 Ci/ml

TABLE 9.3-4
STANDBY LIQUID CONTROL SYSTEM NORMAL OPERATING PRESSURE/TEMPERATURE CONDITIONS

	TEST MODES (a)							
	STANDBY MODE (a)		CIRCULATION TEST		INJECTION TEST (b)		OPERATING MODE (a)	
PIPING	PRESS. PSIG (c)	TEMP. °F	PRESS. PSIG (c)	TEMP. °F	PRESS. PSIG (c)	TEMP. °F	PRESS. PSIG (c)	TEMP. °F
Pump Suction Inlet to Tank Shutoff Valve	Makeup Water Pressure	70/100 (d)	Test Tank Static Head (e)	70/100 (d)	Test Tank Static Head (e)	70/100 (d)	Storage Tank Head	70/110 (d)
Pump Discharge To Explosive Valve Inlet	Makeup Water Pressure	70/100	0/1220	70/100	70 Plus Reactor Static Head	70/100	(70 Plus Reactor Static Head) to 1220	70/110
Explosive Valve Outlet To But Not Including First Isolation Check Valve	Reactor Static Head to 1150 (f)	70/100	Reactor Static Head to 1150(f)	70/100	<70 Plus Reactor Static Head	70/100	(<70 Plus Reactor Static Head) to <1220	70/110
First Isolation Check Valve To The Reactor	Reactor Static Head to 1150 (f)	70/560 (g)	Reactor Static Head to 1150	70/560 (g)	Reactor Static Head (b)	125 (b)	Reactor Static Head to 1150 (f)	70/560 (g)

TABLE 9.3-4
STANDBY LIQUID CONTROL SYSTEM OPERATING PRESSURE/TEMPERATURE CONDITIONS (Continued)

(a) The pump flow rate will be zero (pump not operatinq) during the standby mode and at rated during the test and operating modes.

(b) Reactor to be at 0 psig and 125° F before changing from the standby mode to the Injection Test mode.

(c) Pressures tabulated represent pressure at the points identified below. To obtain pressure at intermediate points in the system, the pressures tabulated must be adjusted for elevation difference and pressure drop between such intermediate points and the pressure points identified below:

Piping	Pressure Point
Pump Suction:	Pump Suction Flange Inlet
Pump Discharge To Explosive Valve inlet:	Pump Discharge Flange Outlet
Explosive Valve Outlet To But Not Including First Isolation Check Valve:	Explosive Valve Outlet
First Isolation Check Valve To The Reactor:	Reactor Sparger Outlet

(d) During chemical mixing, the liquid in the storage tank will be at a temperature of 150° F maximum.

(e) Pump suction piping will be subject to demineralized water supply pressure during flushing and filling of the piping and during any testing where suction is taken directly from the demineralized water supply line rather than a test tank.

(f) Maximum reactor operating pressure is 1150 psig at reactor standby liquid control sparger outlet.

(g) 560° F represents maximum sustained operating temperature.

TABLE 9.3-5
POST ACCIDENT SAMPLE SYSTEM

Note: Post Accident Sampling System Requirements have been eliminated per License Amendment 155. This table retained for historical purposes.

			SAMPLE LINE OPERATING CONDITIONS								
			MAX OPER		DESIGN						
SAMPLE ANALYSIS PANEL	SAMPLE MONITOR PANEL	SAMPLE IDENTIFICATION	Press Psig	Temp. °F	Press Psig	Temp °F	pH Range	BORON RANGE***	CHLORIDE RANGE**	RADIO-NUCLIDE	GRAB SAMPLE CAPABILITY
1PS02J	1PS03J	Containment Atmos. (Gas)	15	185	150	350	--	--	--	*	Yes
1PS02J	1PS03J	Drywell Atmos. (Gas)	30	330	150	350	--	--	--	*	Yes
1PS02J	1PS03J	Spare (Gas)	--	--	150	350	--	--	--	*	Yes
1PS02J	1PS03J	Reactor Water Clean-Up Effluent	1400	120	1500	700	0-14	500-1500ppm*	0-20ppm*	*	Yes
1PS02J	1PS03J	Reactor Coolant	1250	575	1500	700	0-14	500-1500ppm*	0-20ppm*	*	Yes
1PS02J	1PS03J	Reactor Sample (RHR Pump 1A Outlet) or Suppression Pool Sample	381	341	500	350	0-14	500-1500ppm*	0-20ppm*	*	Yes
1PS02J	1PS03J	Reactor Sample (RHR Pump 1B Outlet) or Suppression Pool Sample	381	341	500	350	0-14	500-1500ppm*	0-20ppm*	*	Yes
1PS02J	1PS03J	Spare (Liquid)	--	--	1500	700	0-14	500-1500ppm*	0-20ppm*	*	Yes

* Off-Line Analysis
** Complies with Regulatory Guide 1.97
*** For a worst case accident

NOTE: Drywell and Containment Equipement and Floor Drain sump sample lines are also supplied. Since these samples are not required by NUREG-0737, these lines are not normally utilized.

9.4 HEATING, VENTILATING, AND AIR-CONDITIONING (HVAC) SYSTEMS

Compliance with Regulatory Guide 1.140 as it is applicable to the following non-safety-related filter units is described in Section 1.8.

a. drywell purge filter units,

b. radwaste exhaust filter units,

c. laboratory exhaust filter units,

d. machine shop exhaust filter unit,

e. weld shop exhaust filter unit, and

f. equipment decontamination room exhaust filter unit. (Q&R 460.4)

Both safety and non-safety related HVAC systems are designed to a 1972 American Society of Heating, Refrigerating and Air Conditioning Engineers (ASHRAE) standard. The summer design outside air temperature of 96°F dry bulb used in the HVAC design calculations corresponds to 1% summer maximum design temperature for Champaign/Urbana from 1972 ASHRAE Fundamentals Handbook. The winter design temperature of -2°F corresponds to the 99% winter design temperature of Peoria. The summer design temperature being the highest among the three neighboring areas and the winter design temperature being the lowest among the three neighboring areas. These standard design basis temperatures may be exceeded by extreme weather conditions with -22°F and 112°F once observed in the Springfield area and recorded in Table 2.3-1. The 1987 ASHRAE HVAC Systems and Applications Handbook has added specific cautions on using 1% summer maximum design temperature rather than extreme design temperatures for building like Diesel-Generator Facility, where a complete air change occurs in less than a minute. Since the Diesel-Generator Facility requires 100% outside air for cooling and a complete air change in less than a minute, the effectiveness of its HVAC system is evaluated in accordance with 1987 ASHRAE Handbook. Other plant ventilation systems are either recirculation type or draw minimum outside air for personnel ventilation or area pressurization. The design bases of each plant HVAC system is discussed separately in the applicable section for the system.

9.4.1 Control Room HVAC System

The control room HVAC system serves the control room and surrounding equipment and personnel support areas shown on Drawing M01-1108-6.

9.4.1.1 Design Bases

The control room HVAC system is an engineered safety feature, is designed to provide habitability in the control room under abnormal station conditions. In addition, the control room HVAC system is designed to support actions required from the control room for safe operation of the plant under normal and abnormal station conditons.

9.4.1.1.1 Safety Design Bases

a. The control room HVAC system is an engineered safety feature and is designed with sufficient redundancy to ensure operation and habitability under any accident conditions, and to ensure operation under normal or abnormal station conditions. The system is designed to meet single-failure criteria with the exception of heating and humidification equipment. The heating and humidification provided in the control room HVAC system are not essential for the safety of operating personnel of the function of the safety related equipment.

b. The control room HVAC system is designed to maintain the following temperature and humidity ranges:

Area	Temperature Range	Humidity Range
Main Control Room	71°F to 75°F	35% to 55%
Computer Room	68°F to 72°F	35% to 55%
TMI Panel Room	71°F to 75°F	35% to 55%
Techinical Support Center	71°F to 75°F	35% to 55%
Control Panel Area	71°F to 75°F	No humidity control
Misc. offices & locker rooms	73°F to 77°F	No humidity control
Operations Support Area	55°F to 104°F	No humidity control

c. The system is designed to maintain a positive pressure within the control room envelope with respect to the adjacent areas to preclude infiltration of unconditioned air, during all the operating modes except when the system is in recirculation mode or when the system is in the maximum outside air purge mode.

d. The system is provided with radiation monitors to monitor radiation levels at the minimum outside air intakes and upon detecting a radiation level exceeding a preset value automatically limits the introduction of contaminants into the system by filtering the contaminated air.

This ventilation system design coupled with the control room shielding assures that the dose to the operators inside the control room is within the limits specified by Criterion 19 of 10 CFR 50 Appendix A for the duration of a design-basis accident.

e. There is no chlorine detection system. The chlorine detectors are retired in place.

f. Provision is made in the system to clean up the inside environs upon smoke detection in the return air or at the minimum outside air intakes.

g. The system is designed to Seismic Category I requirements. Safety classification is provided in Table 3.2-1.

h. The safety-related equipment is powered from redundant essential buses, and the instrumentation and power supply to the system are designed to meet IEEE 308 and IEEE 279.

9.4.1.2 System Description

a. The schematic design, including nominal system flow rates, of the control room HVAC system is shown in Drawing M05-1102. The type and rated capacity of principal system components are listed on Table 9.4-1.

b. The control room HVAC system is comprised of two full-capacity, redundant HVAC equipment trains. Each train has a 100% capacity high-efficiency air filter, an absorber for fume and odor removal (normally bypassed), a humidification system, a supply air fan, and a blow-through type air-handling unit comprised of cooling coil, heating coil, and zone mixing dampers. Individual zone ducts from each train are cross-connected to common ducts and supply air to the corresponding zone. Return air ducts from each zone are connected through a duct silencer to two 100% capacity redundant return air fans discharging into their respective mixing plenum upstream of the supply air filters on each air-handling equipment train. This system also provides an exhaust fan serving the locker room area. Provision is made to exhaust all the system air through the return air fan to the atmosphere when operating in the maximum outside air purge mode. The control room HVAC system provides independent temperature control to the following seven zones:

1. control room;

2. TMI Panel Room;

3. control panel area;

4. technical support center;

5. computer room;

6. locker and office areas; and

7. operations administration area

The control room HVAC system provides independent humidity control to the following four zones:

1. Control room;

2. TMI Panel room;

3. Technical Support Center; and

4. Computer room

c. The outside air is normally brought in through one of two minimum outside air intakes and supplied to the operating return air fan suction. These two intakes are physically separated by over 375 feet, and are called "minimum" outside air intakes since one of them is used to supply the minimum required makeup air during normal and abnormal conditions. Wall openings for these intake ducts are missile protected. A third missile-protected air intake is provided to introduce 100% outside air to permit purging of the control room, if required. The minimum quantity of outside air required to provide makeup air for expected leakages (Table 6.4-1) and locker room exhaust fan operation and still maintain not less than 0.125 inch H_20 positive pressure in the control room with respect to the adjacent areas is introduced under all station operating conditions. This positive pressure is not maintained during running of the chlorine mode during which all intakes are closed or when the system is in the maximum outside air purge mode. The control room makeup air maintains control room pressure at a positive 0.125 inch H_2O or greater relative to the adjacent areas. During normal operating conditions, the makeup flow rate (up to approximately 4000 cfm design, 1000 cfm of which is exhausted to atmosphere by the locker room exhaust fan) will vary as doors are opened and closed.

d. The two minimum outside air intakes are located on the east and west sides of the plant respectively such that advantages can be derived from the outside wind direction in the event contaminants are present in one outside air intake.

e. Chilled water is supplied to the cooling coils in each air-handling equipment train from one of two separate water circuits from the control room chilled water system which is discussed in Subsection 9.2.8.1. Each is comprised of one 100% capacity refrigeration unit, one 100% capacity chilled water pump, associated piping, and specialties. Condensers are cooled by plant service water or shutdown service water as discussed in Subsections 9.2.1.1 and 9.2.1.2.

f. All 100% redundant equipment is physically separated by missile walls.

g. High radiation measured at either minimum outside air intake automatically closes the normal intake damper (by sending closure signals to dampers 0VC03YA, 0VC115YA, 0VC03YB, and 0VC115YB) and initiates operation of one of two 100% standby makeup air filter trains. This depends upon which HVAC system is operating. This in turn sends a signal to open the appropriate makeup filter train inlet and outlet dampers (inlet: 0VC02YA or 0VC02YB; outlet: 0VC06YA or 0VC06YB). The recirculation air filter trains are automatically placed in service upon receiving the same high radiation signal. This is accomplished by sending closure signals to dampers 0VC10YA and 0VC10YB, and by sending a signal to open the appropriate recirculation filter train inlet and outlet dampers (inlet: 0VC09YA or 0VC09YB; outlet: 0VC11YA or 0VC11YB). For the removal of radioactive contaminants, minimum outside air is thus introduced through demister, electric heater, medium filter, HEPA filter, iodine adsorbing beds, and downstream HEPA filter. The prefilter limits large particulate loading of the HEPA filter, and the single-stage electric heater assures no higher than 70% relative humidity air entering the charcoal. The makeup air filter trains are capable of removing 99.95% of all particulate matter larger than 0.3 microns and no less than 99% of all forms of iodine. The recirculation

charcoal filter trains are capable of removing no less than 70% of all forms of iodine. The high radiation signal also closes the locker room exhaust dampers, which trips the exhaust fan.

h. In the event of ionization detection (i.e., fire detection) in the control room air, all of the makeup and recirculation air is automatically directed through the normally bypassed recirculation charcoal filter for fume and odor removal. Provision is made to manually purge all the room air by introducing 100% outside air inside the conditioned space, if required. System interlocks will not allow (or will stop) purging if radiation is detected at the minimum outside air intakes.

i. The control room HVAC system instrumentation and controls are treated in detail in Subsections 7.1.2.1.15, 7.3.1.1.6, and 7.6.2.2.5. Each redundant control room HVAC system has a local control panel, and each is independently controlled. Important operating functions are controlled and monitored in the main control room.

Instrumentation is provided to monitor important variables associated with normal operation. Instruments to alarm abnormal conditions are provided in the control room.

Radiation detectors are provided to monitor the radiation levels at the system minimum outside air intakes and to automatically isolate the normal mode makeup air path, initiate one of the makeup air filter trains, trip the locker room exhaust fan and route the supply air stream through the recirculation air filter upon the detection of a radiation level exceeding a predetermined value. The high radiation signal is also alarmed on the main control board. Manual control of minimum outside air intakes by operation of dampers 0VC01YA and 0VC01YB from the main control room is provided.

Smoke detectors are provided in the control room return air path and in the minimum outside air intakes.

Smoke detection is annunciated on the main control board.

The control room HVAC system is designed for automatic environmental control with manual starting of supply fans from the main control room or local control panel. The refrigeration equipment is manually started by a control switch located on the chiller control panel, but is interlocked to supply fan operation via a running signal from the supply fan to the chilled water pump. The controls are electric and electronic.

j. Deluge valves connected to the fire water and shutdown service water systems are provided for all charcoal adsorber beds. (See Subsection 7.3.1.1.6.10)

9.4.1.3 Safety Evaluation

a. The control room HVAC system is designed to ensure the operability of all the components in the control room under all the station operating and accident conditions. In addition, the control room HVAC system is designed to maintain a habitable environment under accident conditions by providing adequate

protection against radiation and toxic gases. The system is provided with redundant equipment to meet the single failure criteria. The power for the redundant equipment is supplied from separate essential power sources and is therefore operable during loss-of-offsite power. The power supply, control, and instrumentation meets the criteria of IEEE 279, IEEE 308, and IEEE 323. All of the HVAC equipment and surrounding structure is designed for Seismic Category I.

All control equipment in the control room are rated for continuous operation at 86°F and 104°F temperatures, nevertheless, the control room ambient temperature is maintained at less than 86° F by the control room HVAC system. Total loss of control room HVAC system is anticipated during a Station Blockout event and is expected to raise the control room temperature to higher than 104° F but less than 120° F. This transient condition is not considered to affect the integrity of the control equipment.

A failure analysis is presented in Table 9.4-2.

b. An equipment fire in the control room will not cause the abandonment of the control room and will not prevent a safe shutdown of the station because early ionization detection is assured, fire fighting apparatus is available, and filtration and purging capability are provided (see Subsection 9.5.1).

c. In the event of smoke or products of combustion in the control room return air, ionization detectors will annunciate in the main control room and air will be automatically routed through the recirculation filter units.

d. A radiation monitoring system is provided to detect high radiation at the two minimum outside air intakes and in the control room area. These monitors alarm in the control room upon detection of high radiation conditions. One of the two full-capacity standby makeup air filter trains and one of the two recirculation air filters designed to remove particulates and absorb iodine from the minimum quantity of outside air, are valved-in and the locker room exhaust fan is tripped upon receiving either of the following signals:

1. high radiation at either of two minimum outside air intake louvers, or

2. manual handswitch operation.

When one of these signals is initiated, the makeup train associated with the operating HVAC train automatically initiates. The normal air intake dampers 0VC03YA(B) and 0VC115YA(B) are given closure signals (as well as the maximum outside air purge dampers), the makeup air filter train isolation dampers 0VC02YA(B) and 0VC06YA(B) are given open signals and the makeup air fan starts. The locker room exhaust fan is also tripped. Provision is made for the operator to select either one of the two minimum outside air intakes for processing through the active makeup filter train. Additionally, there is a normally bypassed recirculation charcoal filter train through which all of the control room supply air is filtered upon receipt of a high radiation signal.

e. The makeup filter trains and the recirculation filter, in conjunction with other plant features, are designed and maintained to limit the occupational dose below levels required by Criterion 19 of 10 CFR 50, Appendix A.

f. The introduction of the minimum quantity of outside air maintains the control room, and other areas served by the control room HVAC system, at a positive pressure (with respect to adjacent areas) during all plant operating conditions and therefore precludes infiltration of unfiltered air into the control room. The only exceptions to this are during chlorine mode operation when no makeup air is used and when the system is in the maximum outside air purge mode.

g. The physical separation of two minimum outside air intakes (i.e., on the east and west sides of the plant) allows the operator to choose the intake with the lowest radiation level.

h. The control room HVAC system operates year-round on a minimum outdoor air cycle, that is, only a maximum of 4000 ft^3/min of air (1000 cfm of which is exhausted to the atmosphere by the locker room exhaust fan) is introduced from outdoors during normal operation. During radiation mode operation, locker room exhaust fan is tripped and makeup air is reduced to 3000 ft^3/min. In the chlorine mode, dampers 0VC01YA, 0VC01YB, 0VC02YA, 0VC02YB, 0VC03YA, 0VC03YB, 0VC115YA, and 0VC115YB (shown in Drawing M05-1102) will be closed to prohibit outside air makeup and the locker room exhaust fan will be tripped.

   If the system is in the maximum outside air purge mode, the purge air dampers will also close. The opposed blade isolation dampers listed above are supplied with tight blade seals and were factory tested to verify acceptable leakage rates. Any damper leakage which would occur passes through the recirculation charcoal adsorber after an accident, therefore there is no deleterious effect on the control room habitability.

   Dampers 0VC01YA, 0VC03YA, 0VC03YB, and 0VC01YB are able to close in 2 seconds after receiving an isolation signal.

i. Each of the two gas operated control room station blackout cooling fans are 100% capacity designed to exhaust a minimum of 5000 CFM. The fans are portable and are stored in the Turbine Bldg. at EL. 800'-0".

9.4.1.4 Testing and Inspection

The following paragraph is considered historical:

All equipment is factory inspected and tested in accordance with the applicable equipment specifications, quality assurance requirements, and codes. System ductwork and erection of equipment is inspected during various construction stages to assure compliance with all applicable standards. Construction tests are performed on all mechanical components and the system will be balanced for the design air and water flows and system operating pressures. Controls, interlocks, and safety devices on each system are cold checked, adjusted, and tested to ensure the proper sequence of operation. A final integrated preoperational test was conducted with all equipment and controls operational to verify the system performance. A

temperature survey was performed to verify the system's ability to maintain the space temperature inside the control room envelope.

Temperature within the control room envelope is continuously monitored.

Provisions are made for periodic inservice testing of the equipment and filters are discussed in Section 6.4. The maintenance is performed on a scheduled basis in accordance with the equipment manufacturer's recommendations. Operation of each redundant equipment train is periodically rotated to provide on-line checking and testing.

The standby makeup filter trains and the recirculation charcoal filters are subjected to the factory, preoperational, and subsequent periodic tests described in Subsection 6.5.1.

Since air leakage through dampers 0VC03YA/B and 0VC115YA/B has been included in the control room operator dose analysis, the in-place leak test of these dampers is not required. However, the 0VC03YA/B dampers are included in the boundary of the periodic negative pressure ductwork leak testing on the control room HVAC system.

The control room ventilation smoke mode of operation is tested at least once per 18 months to verify that on a control room ventilation smoke detector actuation, the system automatically switches to the smoke mode of operation. If the system fails to automatically switch to the smoke mode of operation, the system is then verified to go into the smoke mode of operation on manual actuation, and corrective actions are initiated to correct the deficiency. If the system cannot be manually put into the smoke mode of operation, then the ability of the control room ventilation system to operate in the radiation mode is not ensured. Consequently, the action statements and LCO requirements of the control room ventilation technical specifications are reviewed for applicability.

9.4.1.5 Instrumentation Application

The control room HVAC system instruments and controls are described in detail in Subsections 7.1.2.1.15, 7.3.1.1.6, and 7.3.2.6.

The control room HVAC system is designed for automatic environmental control, after one of the two redundant equipment trains has been manually started from the control room or local control panel. Failure of a component (fans, chiller, pump, etc.) of an operating equipment train is alarmed in the control room where the operator may start the redundant equipment train.

Each of the two redundant equipment trains has an independent local control panel from which individual components of the train may be operated independently.

Important operating variables are monitored and alarmed both on the local control panel and in the control room.

Each of the two redundant minimum outside air intake ducts has two independent divisional radiation detectors which provide alarms to the control room on high radiation. The standby makeup air filter train will automatically start, the recirculation air charcoal adsorber will be placed into service and the locker room exhaust fan tripped (via damper closure) by either both radiation monitors in one division, or by both radiation monitors in one intake. The operator may manually select the alternate minimum outside air intake by damper controls in the control room.

Manual initiation of the chlorine recirculation system will automatically close dampers isolating the HVAC system from the outside air and trip the locker room exhaust fan.

Ionization detectors located in all return air paths and in the outside air intakes detect ionization and actuate an alarm on the main control board. Handswitches in the control room enable the operator to select 100% outside air supply and 100% exhaust in order to purge the control room air of smoke and odors.

The control room HVAC system has all electrically operated controls and control dampers. The two redundant systems each have a separate electric power source.

9.4.2 Fuel Building HVAC System

The fuel building HVAC system is designed to provide ventilation air to the general areas and cubicles in the fuel building and the ECCS equipment cubicles (during normal operating conditions).

9.4.2.1 Design Bases

The non-safety-related system is designed to limit the inside temperature range in conformance with equipment requirements.

9.4.2.1.1 Safety Design Bases

a. The fuel building HVAC system is not required to function in any but normal station operating conditions. However, the fuel building ventilation isolation dampers are required to close on any signal which initiates the Standby Gas Treatment System or upon failure of the instrument air supply.

b. The ventilation supply and exhaust ducts are provided with automatic redundant isolation dampers at the fuel building boundary wall to effect fuel building HVAC system isolation on any signal initiating the standby gas treatment system startup. During system isolation, the standby gas treatment system maintains a negative pressure within the fuel building as described in Subsection 6.2.3.

c. Safety related radiation monitors are located on the fuel pool main exhaust air plenum. These monitors measure the radiation levels of air exhausted from over the spent fuel, fuel cask storage, and fuel transfer pools as well as from other general areas. If excessive airborne radiation levels are detected, alarms are actuated in the main control room and locally. The fuel building HVAC system is automatically isolated and the standby gas treatment system is started. The radiation monitors are described in Section 7.6.

d. The isolation dampers and the adjoining ductwork are designed to Seismic Category I requirements. Safety classification is provided in Table 3.2-1.

9.4.2.1.2 Power Generation Design Bases

a. The fuel building HVAC system is designed to limit the maximum temperature to 104° F in clean, accessible areas, and to 122°F in potentially contaminated cubicles in accordance with equipment ambient temperature requirements.

b. The system is designed with sufficient redundancy to ensure the power generation objective.

c. The system provides filtered and tempered or cooled outdoor air to purge the building of odors and potential contamination.

d. Ventilation air is routed from accessible, clean areas to areas of potential contamination before exhausting it to the common station HVAC vent.

e. The system exhausts air from over the spent fuel storage, fuel cask storage, and fuel transfer pools by entraining gaseous effluents rising from the pools and exhausting them to the common station HVAC vent, thus minimizing personnel exposure to airborne radiation.

f. The system exhausts air from the ECCS equipment rooms during normal operating conditions. Purge air is supplied by the fuel building HVAC system at normal operating conditions.

9.4.2.2 System Description

a. The schematic design of the fuel building HVAC system is shown in Drawing M05-1104. Nominal size and type of principal system components are listed in Table 9.4-3.

b. The fuel building HVAC system function is to supply filtered, tempered, or cooled outside air to the accessible areas through a central fan system consisting of outside air intake, filters, heating and cooling coils, and two 100% capacity fans.

c. Ventilation air flows from clean, accessible areas to areas of greater potential contamination by induction action of one of the system exhaust fans. The exhaust air is released directly to the outdoors via the common station HVAC vent. Two 100% capacity exhaust fans are provided.

d. Air supplied to the fuel handling floor is exhausted through numerous intakes located around the periphery and just above the water level of the spent fuel storage, fuel cask storage, and fuel transfer pools. The air velocity across the surface of the pools varies as a function of distance from the exhaust vents.

The exhaust air velocity in the intakes will be ranged approximately between 900 and 1500 fpm. The exhaust air is routed directly to the system exhaust fans. This arrangement minimizes the possibility of gaseous effluents from the pools escaping the exhaust system.

Radiation monitors in the fuel handling area are indicated in Tables 11.5-1 and 11.5-2. The fuel building exhaust duct radiation monitoring system is located on the fuel building exhaust duct inside the fuel building and upstream of building isolation dampers.

Upon detection of high radiation by this monitoring system the fuel building exhaust and supply ducts are isolated and the SGTS is started. Isolation

dampers have a maximum closure time of not greater than 4 seconds and are designed to be safety-related, Seismic Category I.

This helps prevent the release of contaminated air.

e. Area coolers located in various areas remove heat generated by process equipment and lighting. Chilled water is supplied to each area cooler from the plant chilled water system described in Subsection 9.2.8.3.

f. The fuel building is maintained at minimum 0.25-inch H_2O negative pressure with respect to outdoors during all station normal operating conditions.

g. More air is exhausted from the fuel handling floor than is supplied to draw air from adjacent areas to minimize the possibility of contaminated air flowing from this floor to adjacent areas.

h. The ventilation of the ECCS pump room is described in Subsection 9.4.5.3.

i. Chilled water is circulated through the ventilation air cooling coil to provide additional system cooling capacity.

j. Building isolation dampers are spring loaded and air operated to ensure closure on loss of station air.

k. Controls and instrumentation: each fan is controlled by hand switches located on the main control board and on the local control panel. Local handswitches and instruments are provided on locally mounted control panels. Pertinent system flow rates and temperatures are indicated on the local control panels.

Redundant fans are interlocked to start automatically on loss of a single fan.

Tripped radiation monitors, described previously and in Section 7.6, alarm in the main control room and initiate fuel building HVAC system isolation, fan systems shutdown, and standby gas treatment system startup.

Controls are pneumatic and electric.

Instrumentation is provided for monitoring system operating variables during normal station operating conditions. The loss of air flow, high and low system temperature, high differential pressure across the supply filter, and high and low building differential pressures are annunciated on the local control panel. Trouble on the local panel is annunciated on the main control board.

9.4.2.3 Safety Evaluation

a. The operation of the fuel building HVAC system is not required to assure either of the following conditions:

1. the integrity of the reactor coolant pressure boundary, or

2. the capability to shut down the reactor and maintain it in a safe shutdown condition.

b. The operation of the fuel building isolation dampers is required to assure that the limits of 10 CFR 50.67 are not exceeded.

c. The system is designed with redundant, safety-related, Seismic Category I, spring-loaded, air operated fail-closed isolation dampers at the fuel building boundary walls to ensure building isolation in the event of a fuel handling accident. In addition, the ventilation exhaust ducts are sized and routed such that the building will be isolated before the airborne radioactivity released by a postulated fuel drop accident reaches the isolation boundary.

d. The system is designed with sufficient redundancy to assure its reliability for personnel safety and power generation.

e. A failure analysis is presented in Table 9.4-4.

9.4.2.4 Testing and Inspection

NOTE: The following paragraph is considered historical:

All equipment is factory inspected and tested in accordance with the applicable equipment specifications and codes. System ductwork and erection of equipment is inspected during various construction stages. Construction tests are performed on all mechanical components and the system is balanced for the design air and water flows and system operating pressure. Controls, interlocks, and safety devices on each system are cold checked, adjusted, and tested to ensure the proper sequence of operation. A final integrated preoperational test is conducted with all equipment and controls operational to verify the system performance. A temperature survey is performed to verify the systems ability to maintain space temperature.

Leak tests are performed on the fuel building as part of secondary containment to assure that the standby gas treatment system can maintain the secondary containment at 1/4-inch negative pressure with respect to the atmosphere with no more than the design-basis leakage.

Tests are made on the isolation dampers to verify the closure times and the damper leakage is included in the secondary containment leakage testing.

Maintenance is performed on a scheduled basis based on manufacturer's recommendations, plant operating experience, and good engineering practice.

9.4.3 Auxiliary Building HVAC System

The auxiliary building HVAC system is designed to provide ventilation air requirements to the auxiliary building and to the control building (except for the control room).

9.4.3.1 Design Bases

9.4.3.1.1 Safety Design Bases

The auxiliary building HVAC system is not required to function in any but normal station operating conditions and, therefore, has no safety design bases.

9.4.3.1.2 Power Generation Design Bases

a. The auxiliary building HVAC system is designed to limit the maximum temperature in accessible areas (HVAC equipment rooms, hallways, and other miscellaneous equipment rooms) of the auxiliary and control buildings to 104°F. The design basis normal temperature for generally accessible areas is 90°F. The inaccessible areas (shielded cubicles or areas which typically have no electric motor driven equipment) are limited to a maximum of 122°F.

b. The system is designed with sufficient redundancy to ensure the power generation objective.

c. The system provides a quantity of filtered and heated or cooled outdoor air to purge the building of odors and potential contamination.

d. Ventilation air is routed from accessible, clean areas to areas of potential contamination before exhausting to the common station HVAC vent.

9.4.3.2 System Description

a. The schematic design, including nominal system flow rates, of the auxiliary building HVAC system is shown in Drawing M05-1101. The type and rated capacity of principal system components are listed in Table 9.4-5.

b. The auxiliary building HVAC system functions to supply filtered outside air to the accessible areas through a central fan system consisting of outside air intake, filters, heating and cooling coils and two 100% of full capacity fans.

c. Ventilation air flows from clean, accessible areas to areas of greater potential contamination by induction action of one of the system exhaust fans. The exhaust air is released directly to the outdoors via the common station HVAC vent. Two 100% of full capacity exhaust fans are provided.

d. The auxiliary building HVAC system provides ventilation air to the switchgear rooms on elevation 762 feet 0 inch in the auxiliary building, switchgear room on elevation 781 feet 0 inch in the auxiliary and control buildings, and cable spreading area on elevation 781 feet 0 inch in the control building. The supplied air quantity is enough to make up for the battery rooms exhaust in the auxiliary building and the control building, and to maintain these areas at slightly positive pressure with respect to the surroundings.

e. Area coolers located in various areas remove heat generated by process equipment and lighting. Chilled water is supplied to each area cooler from the plant chilled water system described in Subsection 9.2.8.3.

f. Chilled water is also circulated through the ventilation air cooling coil to provide additional system cooling capacity.

g. Controls and instrumentation: each fan is controlled by handswitches located on the local control panel. Local handswitches and instruments are provided in

locally mounted control panels. Pertinent system flow rates and temperatures are indicated on the local control panels.

Redundant fans are interlocked to start automatically on loss of a single fan.

Controls are pneumatic and electric.

Instrumentation is provided for monitoring system operating variables during normal station operating conditions. The loss of air flow, high and low system temperature, high and low building differential pressure and differential pressure across the supply air filter are annunciated on the local control panel.

9.4.3.3 Safety Evaluation

a. The operation of the auxiliary building ventilation system is not required to assure either of the following conditions:

   1. the integrity of the reactor coolant pressure boundary; or

   2. the capability to shut down the reactor and maintain it in a safe shutdown condition.

b. A failure analysis is presented in Table 9.4-6.

c. However, the system incorporates features that assure its reliable operation over the full range of normal station operations. These features include the installation of redundant principal system components.

9.4.3.4 Testing and Inspection

The following paragraph is considered historical:

All equipment is factory inspected and tested in accordance with the applicable equipment specifications and codes. System ductwork and erection of equipment is inspected during various construction stages. Construction tests are performed on all system components and the system is balanced for the design air and water flows and system operating pressures. Controls, interlocks, and safety devices on each system are cold checked, adjusted, and tested to ensure proper sequence of operation. A final integrated preoperational test is conducted with all equipment and controls operational to verify system performance. A temperature survey is performed to verify the system's ability to maintain space temperature.

Maintenance is performed on a scheduled basis based on manufacturer's recommendations, plant operating experience, and good engineering practice.

9.4.3.5 Instrumentation Application

The auxiliary building HVAC system instrumentation and controls are described in detail in Subsections 7.7.1.13 and 7.7.2.13.

Either of the two supply or two main exhaust fans may be manually started from the local supply fan control panel; the exhaust fans may also be started by control switches at the exhaust fan local control panel. The isolation damper for each fan opens on fan start and closes on fan

stop; the outside air intake damper opens when either supply fan starts and closes when both supply fans stop.

After the fans are started, supply air temperature control is automatic; differential air pressure between various areas in the auxiliary, control, and diesel-generator buildings is automatically controlled by modulation of exhaust air dampers.

In the event of failure of either a supply fan or an exhaust fan, the remaining fan starts automatically, unless the building air pressure requires either supply or exhaust fans to trip.

Supply air temperature, supply and exhaust flow rates, differential pressure across filters, various building air differential pressures, and operating conditions of equipment are all indicated on the local control panels. Fan trip, loss of air flow, high and low air temperatures, high filter differential pressure, and high and low building air differential pressures are alarmed on the local control panels. Any system malfunction which is alarmed locally actuates a common auxiliary building HVAC system trouble alarm in the main control room.

The controls and instrumentation are pneumatic and/or electric. The control dampers are pneumatically actuated. With the exception of the post accident sample room air handling unit, the electric power source is not safety-related; on loss of power, the auxiliary building HVAC system will shut down.

9.4.4 Turbine Building Area HVAC System

This system serves all areas of the turbine building. This system operates during all normal station conditions.

9.4.4.1 Design Bases

9.4.4.1.1 Safety Design Bases

The turbine building HVAC system is not required to function in any but the normal station operating condition and, therefore, has no safety design bases.

9.4.4.1.2 Power Generation Design Bases

a. The turbine building HVAC system is designed to limit the maximum temperatures in generally accessible areas to 104° F. The potentially contaminated cubicles are limited at 122° F, except the turbine building steam tunnel between columns N-K, Rows 109-116, and from elevation 762 ft 0 in to 796 ft 0 in shall be 150° maximum. The temperature maintained in each area conforms to the equipment ambient requirement in that area.

b. The system provides a quantity of filtered outdoor air to purge the building of possible contamination. Ventilation air is routed from accessible clean areas to areas of potential contamination before exhausting to the common station HVAC vent.

c. The system is designed with sufficient redundancy to ensure the power generation objective.

d. Both the supply air system and the exhaust air system operate continuously. The lead supply and exhaust fans are manually started, and the standby fan can automatically start upon trip of the running fan. Isolation dampers at each supply and exhaust fan close when the respective fan is not running. There is an additional isolation damper at the supply air inlet which closes when the supply air system is not operating. An automatic damper in the supply system ductwork regulates the flow of air to maintain the turbine building at approximately 0.25 inch water gauge negative pressure with respect to atmosphere.

e. One fixed CAM is located in the turbine building to monitor exhaust air for radiation before discharge to the common station HVAC vent.

f. In the event of a loss of offsite electric power, the turbine building ventilation system is shut down.

9.4.4.2 System Description

a. The schematic design and nominal flow rates of the turbine building HVAC system are shown on Drawing M05-1113. Principal system component types and ratings are listed in Table 9.4-7.

b. The turbine building HVAC system supplies filtered and heated or cooled air to the general areas through a central fan system consisting of an outside air intake, filters, a heating coil, a cooling coil, two 100% of full capacity supply air fans, and supply air ductwork.

c. The ventilation air is supplied to accessible areas in the main, mezzanine, grade, and basement floors and induced to areas of greater contamination potential.

d. The potentially contaminated cubicles are maintained at a slightly lower pressure than the surrounding accessible areas and, therefore, the air flows from the accessible areas to these shielded cubicles before it is exhausted.

e. One of the two 100% capacity exhaust fans pulls the ventilation air through exhaust ducts from potentially contaminated areas and discharges the air to the common station HVAC vent.

f. By exhausting more air than is provided by the supply fan, a negative differential pressure of approximately 0.25 inch water gauge is maintained in the turbine building with respect to outdoors. This is done to preclude leakage of contaminated air to the outside atmosphere.

g. Pressure control dampers are employed between clean and potentially contaminated areas and are of the backflow type and fail closed. This minimizes the backflow of contaminated air to clean areas when there is a loss of power and subsequent fan system shutdown.

h. Fan coil units are located in appropriate areas to remove generated heat and to maintain temperatures within the required ranges. Chilled water is supplied to each fan coil unit from the plant chilled water system described in Subsection 9.2.8.3.

i. Each fan coil unit consists of a fan and a cooling coil enclosed in a sheet metal housing. Supply air ducts are provided for air distribution wherever required. Return air to the units is unducted.

j. Chilled water is circulated through the central ventilation unit cooling coil to provide cooling for the supply air system.

k. The relief line from the oxygen injection portion of the condensate system inputs into the exhaust ductwork, should the relief valve lift.

l. Controls and instrumentation:

1. Each fan is controlled by handswitches located on local control panels. Pertinent system flow rates and temperatures are also indicated on the local control panels. The main control board has alarms which indicate when there are alarm indications on the local control panels.

2. Standby fans are interlocked to start automatically on loss of the companion operating fan.

3. Controls are pneumatic and electric.

4. Instrumentation is provided for monitoring system operating variables during normal station operating conditions. The loss of airflow, high and low system temperature, high and low turbine building differential pressure, and high differential pressure across the supply air filter are annunciated on the local control panel.

9.4.4.3 Safety Evaluation

a. The turbine building HVAC system is not safety-related and is not required to assure either the integrity of the reactor coolant pressure boundary or the capability to shut down the reactor and maintain it in a safe shutdown condition.

b. A failure analysis is presented in Table 9.4-8.

c. The ventilation air supplied in accessible areas is induced through potentially contaminated cubicles by a mechanical exhaust system. Isolation dampers of the fail-closed type are provided in the airflow path to the potentially contaminated areas to preclude backflow of contaminated air into clean areas on loss of the ventilation system.

d. The system incorporates features to assure its reliable operation over the full range of normal station conditions. These features include the installation of redundant principal system components.

9.4.4.4 Testing and Inspection

All equipment was factory inspected and tested in accordance with the applicable equipment specifications and codes. Systems ductwork and erection of equipment was inspected during various construction stages. Preoperational tests were performed on all system components

and the system is balanced for the design air and water flows and system-operating pressures. Controls, interlocks, and safety devices on each system are checked, adjusted, and tested to ensure the proper sequence of operation. A final integrated preoperational test was conducted with all equipment and controls operational to verify the system performance.

Maintenance is performed on a scheduled basis based on manufacturer's recommendations, plant operating experience, and good engineering practice.

The system is in operation during normal plant operation. Operation of the standby equipment is rotated periodically to provide on-line checking and testing of performance.

9.4.5 Engineered Safety Feature Ventilation Systems

The ventilation systems for engineered safety feature systems are designated as Essential Auxiliary Support (EAS) systems and include the following:

a. diesel-generator facilities ventilation system,

b. switchgear heat removal system,

c. ECCS equipment area cooling system,

d. SSW pump room cooling system, and

e. combustible gas control system equipment cubicle cooling system.

9.4.5.1 Diesel-Generator Facilities Ventilation System

The diesel-generator ventilation system provides year-round ventilation for three diesel-generator rooms, three day tank rooms, and three diesel oil storage tank rooms. Each diesel-generator room is provided with an independent ventilation system.

9.4.5.1.1 Design Bases

This system is designated as an EAS system and limits the room temperatures in order to conform to equipment requirements, and to provide ventilation.

9.4.5.1.1.1 Safety Design Bases

a. The diesel-generator facilities ventilation systems are designed to operate under normal and abnormal plant operating conditions.

b. The systems are designed to Seismic Category I requirements and safety classifications are in Table 3.2-1.

c. With the exception of the day tank room and oil tank room temperature instrumentation, which have no control functions, the components of each diesel-generator room and oil tank room are powered from the essential bus corresponding to the diesel-generator it is serviing. The controls, instrumentation, and power supply for the system are designed to meet IEEE 279, IEEE 308, and IEEE 323 criteria.

d. The air intake and exhaust openings are located a sufficient distance apart to preclude reintroduction of exhaust air into the room.

e. A separate ventilation fan, mixing dampers and duct are provided for each of the three diesel-generator rooms. This design ensures adequate heat removal from the diesel-generator rooms whenever the diesels are running.

9.4.5.1.1.2 Power Generation Design Bases

a. The diesel-generator facilities three individual room ventilation fans typically do not run unless their respective diesel generator is running. The two common make-up supply fans operate continuously all year around to supply ventilation air through the diesel-generator rooms, diesel oil day tank rooms, and diesel fuel storage tank rooms when the diesel generators are not operating. This is done independent of the diesel-generator operation to prevent the possible accumulation of oil fumes. The diesel-generator oil room exhaust fans operate year round under all plant operating conditions.

b. Each diesel-generator facility ventilation system is designed to limit the maximum temperature to 130°F corresponding to a summer design outside temperature of 96°F in the diesel-generator room.

c. Each system uses outside air for heat removal and ventilation.

d. Each diesel-generator facility ventilation system is capable of operating in an extreme weather conditions that are identified in USAR Table 2.3-1. Introduction of 112°F outside air to ventilate the running diesel-generator may raise the room temperature to 140°F maximum and exceeds the design temperature for 12 hours. The diesel-generator and associated components are capable of operating during and after this transient condition. During extreme outside winter temperature of -22°F, the heat generated from the diesel-generator will maintain the diesel-generator and oil tank rooms at greater than the minimum design temperature of 65°F.

9.4.5.1.2 System Description

a. The schematic diagram of the diesel-generator facility ventilation system for Unit 1 is shown in Drawing M05-1103. Equipment parameters of principal system components are listed in Table 9.4-9.

b. The diesel-generator facility ventilation system consists of three 100% capacity ventilation fans, one for each diesel-generator room, three 100% capacity exhaust fans, one for each day tank and oil storage tank room, and two 50% makeup supply fans.

c. When a diesel generator operates, outside air is induced through a missile-protected intake, mixed with recirculated room air to limit the minimum supply temperature to 65° F and then ducted to the respective diesel-generator room. The exhaust air is forced through ducts by positive room pressure to the outdoors through a missile-protected exhaust outlet or back into the suction of the ventilation fan. A portion of ventilation air going to the diesel-generator room is

ducted to the day tank and oil storage tank rooms to purge them of potentially combustible fumes and limit room temperatures to 120° F. An exhaust fan discharges air drawn from the day tank and oil storage rooms to the outdoors.

d. During normal plant operation conditions, when the diesel generators are not operating, a nominal quantity of ventilation air is supplied continuously by a diesel-generator makeup ventilation system to the three diesel-generator rooms and their corresponding day tank and oil storage tank rooms to maintain the room temperature between 65° F and 104° F. Outside air is induced through a missile-protected intake, filtered, heated or cooled, and ducted to the three diesel-generator rooms. The diesel oil rooms are maintained at a slightly negative pressure with respect to the balance of the facility to induce diesel-generator room air to the oil rooms to purge them of potentially combustible fumes and limit their temperatures to 104°F.

e. Fire dampers with fusible links are utilized in ducts penetrating fire walls. Backdraft dampers are installed at the outlet of each exhaust fan for the day tank and oil storage tank rooms. A signal from the carbon dioxide fire protection system in the respective diesel-generator room automatically shuts down the oil tank room exhaust fan thereby closing the backdraft damper and isolating the rooms; this signal also shuts down the diesel-generator ventilation fans.

f. Controls and instrumentation:

1. Each diesel-generator room ventilation fan is interlocked to start when its respective diesel generator starts and can be controlled by handswitches located on the main control board.

2. Temperature controllers located in each room control the ventilation systems supply, recirculation and exhaust air motor-operated dampers, and thereby, the room temperatures.

3. The temperature of each room is indicated locally and high room temperature is annunciated on the main control board.

4. All controls are electric/electronic (except for the makeup air fan dampers and chilled water flow through the cooling coil).

9.4.5.1.3 Safety Evaluation

a. All power and control circuits meet IEEE 279, IEEE 308, and IEEE 323 criteria.

b. All equipment and surrounding structures are designed for Seismic Category I.

c. The loss of any ventilating fan does not affect the safe shutdown capability of the station, since a ventilation fan is provided for each diesel generator.

d. A failure analysis is presented in Table 9.4-10.

e. The ventilation system, and the safety related equipment inside the diesel-generator rooms and tank rooms are capable of operating during and after the

12 hours transient condition with peak temperature of approximately 140°F during diesel-generator operation coincident with extreme outside air temperature of 112°F.

9.4.5.1.4 Inspection and Testing

a. The inspections and testing discussed within Paragraph “a” are considered historical. All equipment is factory inspected and tested in accordance with the applicable equipment specifications, quality assurance requirements, and codes. System ductwork and erection of equipment is inspected during various construction stages to assure compliance to engineering installation specifications. Preoperational tests are performed on all system components and the system is balanced for the design air and system operating pressures.

   Controls, interlocks, and safety devices on each system are cold checked, adjusted, and tested to ensure the proper sequence of operation.

   A final integrated preoperational test is conducted with all equipment and controls operational to verify the system performance. A temperature survey is performed to verify the system's ability to maintain space temperature.

b. Maintenance is performed on a scheduled basis based on manufacturer's recommendations, plant operating experience, and good engineering practice.

c. System and equipment operation is monitored during periodic testing of the diesel-generator units.

9.4.5.2 Switchgear Heat Removal System

The system serves Division 1, 2, and switchgear areas and battery rooms in the auxiliary and control building; it also serves the cable spreading area, BOP battery rooms, and Division 1, 2, and 4 inverter rooms under normal and abnormal operating conditions.

9.4.5.2.1 Design Bases

The system removes heat to maintain temperatures in accordance with equipment requirements. Portions of the system are designated as an EAS system. The safety-related cooling system consists of a heat removal coil cabinet, a fan, and a condensing unit. The battery room exhaust fans are also safety-related. The balance of the system is non-safety-related and consists of a heat removal coil cabinet with a chilled water coil and a fan.

9.4.5.2.1.1 Safety Design Bases

a. The safety design basis is applicable to the safety-related switchgear heat removal systems, each of which consists of a condensing unit and a switchgear heat removal coil cabinet with a refrigerant evaporator coil. The safety-related design basis is also applicable to all the battery room exhaust fans.

b. The switchgear heat removal system is designed with redundancy to ensure adequate heat removal from all three switchgear divisions under any normal or

abnormal station conditions. The system is designed to meet single failure criteria.

c. The system is designed to Seismic Category I requirements. Safety classification is provided in Table 3.2-1.

d. Each safety-related switchgear heat removal system is powered from the Class 1E bus serving the associated Class 1E switchgear. The controls, instrumentation, and power supply for the system are designed to meet IEEE 308 and IEEE 279 criteria.

e. The system exhausts sufficient air from the battery rooms to alleviate any possibility of the formation of an explosive atmosphere.

f. The system supplies sufficient air to Division 1, 2, 3, and 4 battery rooms in order to maintain these rooms between 74°F and 80°F for maximum battery life during normal plant operation. The BOP battery rooms are maintained between 87°F to 93°F during normal plant operation.

9.4.5.2.1.2 Power Generation Design Bases

a. The switchgear heat removal system is designed to limit the maximum temperatures inside the switchgear rooms to 95°F during normal plant operation and to 104°F during abnormal plant operation in conformance with equipment ambient temperature ratings and requirements. However, cooling system equipment will be sized to maintain a nominal room temperature of 95°F under normal and abnormal operating conditions.

b. A minimum quantity of outside air is supplied from the auxiliary building HVAC system to each essential switchgear room to provide makeup air for battery room exhausts and to maintain the switchgear rooms at a positive pressure with respect to surrounding areas.

9.4.5.2.2 System Description

a. The schematic design, including nominal system flow rates, of the switchgear heat removal system is shown in Drawings M05-1115 and M05-1121, Sheets 1 and 2. The type and rated capacity of principal system components are listed in Table 9.4-11.

b. The switchgear heat removal system for each division consists of two independent switchgear heat removal coil cabinets connected to a common supply duct system. Each switchgear heat removal coil cabinet consists of a filter, cooling coil, and fan. One switchgear heat removal coil cabinet has a chilled water coil fed from the plant chilled water system and utilized for cooling during normal station operating conditions only. The other switchgear heat removal coil cabinet is a standby and has a refrigerant evaporator coil fed from a water-cooled condensing unit located within the switchgear room. This coil is to be utilized during abnormal operating conditions or upon failure of the chilled water switchgear heat removal coil cabinets. The condenser heat is removed by

shutdown service water or plant service water as discussed in Subsections 9.2.1.2 and 9.2.1.1, respectively.

c. Supply air is ducted throughout each switchgear area and battery room.

d. Return air from the cable spreading area and Division 4 inverter room is ducted and returned to the corresponding switchgear room by means of a switchgear heat removal return fan, and then to switchgear heat removal coil cabinet by the suction action of the cabinet fan.

e. During normal operating conditions, air supplied to each battery room is exhausted to the turbine building by one of the exhaust fans provided for each room. No less than six air changes per hour of air are exhausted to ensure the dilution of hydrogen generated by the batteries. Each battery room is held at a negative pressure with respect to the switchgear rooms.

f. Under normal operating conditions, makeup air is provided by the auxiliary building HVAC supply system. Under abnormal operating conditions, provision is made for outside air to be inducted to the switchgear room to make up for the battery room exhaust requirements.

g. Fire dampers with fusible links are provided in any duct penetrations and any ventilation openings in fire walls.

h. Physical segregation is accomplished by virtue of equipment location in separate switchgear areas.

i. Instrumentation and controls: Control switches, auxiliary relays, and other controls necessary for the operation and monitoring of the switchgear heat removal system are located either on the main control board or on local panels.

Battery room temperature indication and high battery room temperature alarms are provided on a local HVAC control panel.

Handswitches for manual starting of supply and exhaust fans are provided on the main control board. Handswitches for refrigeration units are provided on the local control panels.

Except for the chilled water flow through the non-safety-related cooling coils, the controls are electric and electronic.

Design details and logic of the instrumentation are described in Chapter 7.

9.4.5.2.3 Safety Evaluation

a. All power and control circuits for each switchgear heat removal coil cabinet condensing unit combination, battery room exhaust fans and switchgear heat removal return fans meet IEEE 308 and IEEE 279 criteria.

b. All equipment meets the criteria of the appropriate system Quality Group Classification listed in Subsection 3.2.2.

c. All equipment and surrounding structure is designed for Seismic Category I.

d. The loss of any single heat removal standby switchgear heat removal coil cabinet/condensing unit combination does not affect the safe shutdown capability of the station, since an independent unit is provided for each division of switchgear.

e. The failure analysis is provided in Table 9.4-12.

9.4.5.2.4 Testing and Inspection

All equipment was factory inspected and tested in accordance with the applicable equipment specifications, quality assurance requirements, and codes. System ductwork and erection of equipment was inspected during various construction stages to assure compliance with engineering specifications. Construction tests are performed on all mechanical components and the system is balanced for the design air and water flows and system operating pressures. Controls, interlocks and safety devices on each system were cold checked, adjusted, and tested to ensure the proper sequence of operation. A final integrated preoperational test was conducted with all equipment and controls operational to verify the system performance. A temperature survey is performed to verify the system's ability to maintain space temperature.

Maintenance is performed on a scheduled basis based on manufacturer's recommendations, plant operating experience, and good engineering practice.

9.4.5.3 ECCS Equipment Area Cooling System

This system is designated as an EAS system and serves the emergency core cooling system (ECCS) equipment cubicles on elevations 707 feet 6 inches and 712 feet 0 inch in the auxiliary building when the ECCS equipment is required for service.

9.4.5.3.1 Design Bases

9.4.5.3.1.1 Safety Design Bases

a. The ECCS equipment area cooling system consists of a fan and coil cabinet for each ECCS equipment cubicle which is available for removing equipment heat under all station operating conditions.

b. Each fan and coil cabinet is capable of dissipating the heat produced by the operation of corresponding ECCS equipment and limiting the cubicles temperature to less than 150° F after a loss of coolant accident (see Table 3.11-7).

c. Each fan cooler, except MSIV inboard, MSIV outboard, and HPCS room coolers are capable of operating in an ambient temperature of 250° F maximum in conformance with Table 3.11-7 and 2 psig pressure saturated steam atmosphere for 6 hours after an accident in case of a local pressure steam leak.

d. Each fan and coil cabinet is capable for operating at the parameters specified in Table 3.11-7 after an accident.

e. The ECCS equipment is designed for redundancy, thus the respective cubicle coolers are composed of singular components, with no component redundancy required, (except for HPCS, which has two coolers which work in parallel).

f. Each fan and coil cabinet is powered from essential buses serving the associated ECCS equipment. The instrumentation and power supply for the system are designed to meet IEEE 279, IEEE 308, and IEEE 323 criteria.

g. The system is designed to Seismic Category I requirements. Safety Classification is provided in Table 3.2-1.

h. Each fan and coil cabinet is housed in a Seismic Category I structure.

i. The fan and coil cabinet in each cubicle is separated from others by missile barriers so that a single missile cannot affect more than one fan and coil cabinet (except for the HPCS room, which has two coolers which work in parallel).

j. Each coil is supplied by plant service water or shutdown service water discussed in Subsections 9.2.1.1 and 9.2.1.2.

k. Under normal operating conditions, a small quantity of ventilation air is induced to the ECCS cubicles from the containment gas control boundary and exhausted from the cubicles by the fuel building HVAC system. A radiation monitor is located in the fuel building common exhaust duct. Upon detection of high radiation, an alarm is actuated in the main control room, the secondary containment is isolated, and the standby gas treatment system is started.

9.4.5.3.1.2 Power Generation Design Bases

a. The ECCS equipment area cooling system is required to operate during normal station operating conditions. Also, it is required to operate when the ECCS equipment or the ECCS equipment area cooling system itself is in the "test" mode.

b. A small quantity of ventilating air is purged through each ECCS equipment cubicle during normal station operation by the fuel building HVAC system described in Subsection 9.4.2.

9.4.5.3.2 System Description

a. The schematic design of ECCS equipment area cooling system, piping, and instrumentation is indicated in Drawing M05-1116. Nominal size and type of principal system components are listed in Table 9.4-13.

b. A supply air duct is provided for the air distribution in each cubicle. The air is recirculated and cooled by the fan and coil cabinet.

c. Shutdown service water with a maximum design basis inlet water temperature of 95°F and minimum inlet water temperature of 32°F is used in the cooling coils. Cooling coils are designed to deliver the required cooling capacity with 95°F water.

d. Ventilation in the cubicles during normal station operating conditions is provided by the fuel building HVAC system.

e. All the ECCS equipment area fans and coil cabinets are physically separated by virtue of their location in separate cubicles, which are located in a Seismic Category I structure.

f. Instruments and controls:

1. The flow of water in each cooling coil is maintained at all times during ECCS equipment operation and is not modulated. With the exception of the RHR heat exchanger rooms, each fan is electrically interlocked with the respective ECCS equipment operation. Except for the MSIV rooms, the fans and coil cabinets can also be operated manually by switches provided on the main control board. The MSIV room fan and coil cabinet control switches are located on a local panel.

2. The room cooler fans are controlled as follows:

a. The RHR heat exchanger room cooler is operated automatically by a temperature switch located in the cubicle.

b. The MSIV Inboard, MSIV Outboard and HPCS room coolers are interlocked to operate automatically in conjunction with the equipment located in the respective cubicle.

c. The LPCS, RHR and RCIC pump room coolers are interlocked to operate automatically on either room temperature or in conjunction with the ECCS equipment located in the respective cubicle. Operation of the respective ECCS equipment overrides the temperature switch shutdown of the coolers.

3. Instrumentation is provided to monitor the temperature of air entering and leaving the cooling coil. The temperature inside each cubicle is indicated and high and low temperature annunciated on the main control board except the MSIV inboard and MSIV outboard room.

4. All the controls and instruments are electric and electronic, except for the fail-open, air-operated shutdown service water valves, which open to allow flow through the cooling coils.

9.4.5.3.3 Safety Evaluation

a. All power and control circuits for each fan meet IEEE 279, IEEE 308, IEEE 323, IEEE 336, IEEE 344, IEEE 338, and IEEE 384 criteria.

b. All the fans, coil cabinets, and piping meet the criteria of the appropriate system quality Group Classification listed in Section 3.2.

c. All equipment and surrounding structures are designed for Seismic Category I.

d. High temperature inside each ECCS cubicle is alarmed on the main control board. The loss of an ECCS equipment area fan and coil cabinet causing high temperature inside the cubicle does not preclude equipment operation and the operator may continue to operate the corresponding ECCS equipment or may start a standby ECCS equipment or system, with the corresponding fan and coil cabinet.

e. A failure analysis is presented in Table 9.4-14.

9.4.5.3.4 Testing and Inspection

NOTE: The following two paragraphs are considered historical:

All equipment is factory inspected and tested in accordance with the applicable equipment specifications, quality assurance requirements, and codes. System ductwork and erection of equipment is inspected during various construction stages to assure compliance with engineering specifications.

Preoperational tests are performed on all system components and the system is balanced for the design air and water flows and system design pressures. Controls, interlocks, and safety devices on each fan and coil cabinet are cold checked, adjusted, and tested to ensure the proper operation. A final integrated preoperational test is conducted with all equipment and controls operational to verify the system performance. A temperature survey is performed to verify the system's ability to maintain space temperature.

The ECCS equipment area cooling system fan motors are qualified by objective evidence or a qualification test on a similar motor with identical class of insulation, type of enclosure, and bearing design under test conditions identical to or in excess of abnormal ambient conditions described in Subsection 9.4.5.3.1.1, Items b, c, and d. The cooling coils have wide fin spacing, eight per inch of tube, to preclude air flow restriction under high water vapor condensation rates.

Maintenance is performed on a scheduled basis based on manufacturer's recommendations, plant operating experience, and good engineering practice.

9.4.5.4 Shutdown Service Water Pump Room Cooling System

This system is designated as an EAS system and serves the shutdown service water (SSW) pump rooms on elevation 699 feet 0 inch in the circulating water screen house when the SSW pumps are required for service.

9.4.5.4.1 Design Bases

9.4.5.4.1.1 Safety Design Bases

a. The shutdown service water (SSW) pump room cooling system consists of a fan and coil cabinet for each pump room. Each coil is cooled by SSW and is available under all station operating conditions.

b. Each fan and coil cabinet is capable of dissipating the heat produced by the operation of the corresponding pump and motor to limit the inside room temperature to 122°F.

c. The SSW pumps are designed for redundancy, thus the respective fan and coil cabinet are comprised of singular components with no component redundancy required.

d. Each fan and coil cabinet is powered from essential buses serving the associated SSW pumps. The instrumentation and power supply for the system is designed to meet IEEE 279, IEEE 308, and IEEE 323 criteria.

e. The system is designed to Seismic Category 1 requirements. Safety classification is provided in Table 3.2-1.

f. Each fan and coil cabinet is housed in a Seismic Category I structure.

g. Each fan and coil cabinet is capable of continuous operation in an ambient temperature of 122° F.

h. Each coil is supplied by shutdown service water as discussed in Subsection 9.2.1.2.

i. Under normal operating conditions, a small quantity of ventilation air is induced to the SSW pump rooms from the circulating water screen house ventilation system.

9.4.5.4.1.2 Power Generation Design Bases

a. The SSW pump room cooling system is not required during normal station operating conditions except when the SSW pumps are in the "test" mode.

b. An electric unit heater is provided for each SSW pump room to prevent the possible freezing of any water lines when the SSW pump is not operating. The unit is sized to provide sufficient capacity to keep a minimum room temperature of 65° F.

9.4.5.4.2 System Description

a. The schematic design of the SSW pump room cooling system is indicated on Drawing M05-1106, Sheets 1 and 2. Nominal size and type of principal components are listed in Table 9.4-15.

b. A supply air duct is provided for the air distribution in each room. The air is recirculated and cooled by the fan and coil cabinet.

c. Shutdown service water with a maximum inlet temperature of 95° F and a minimum inlet temperature of 32° F is used in the cooling coils. Cooling coils are designed to deliver the required cooling capacity with 95° F water.

d. All the SSW pump room fans and coil cabinets are physically separated by virtue of their location in separate pump rooms which are Seismic Category I structures.

e. Ventilation in the pump rooms during normal station operating conditions is provided by the circulating water screen house ventilation system.

f. Instruments and controls:

1. The flow of water in each cooling coil is maintained all the time during SSW pump operation and is not modulated. The fan is electrically interlocked with respective SSW pump operation, such that with the handswitch in auto position, an auto start signal from the pump will start the fan. The fan and coil cabinet can also be operated manually by switches provided on the main control board.

   If the manual switch is in "PULL-TO-LOCK" or is held in the "STOP" position, the autostart signal will not override the manual switch. This is not a design deficiency.

2. Each fan and coil cabinet is shut down by a temperature switch located in the respective room. The switch is interlocked with the SSW pump to preclude fan and coil shutdown when the pump is operating.

3. Instrumentation is provided to monitor the temperature of air entering and leaving the cooling coil. The temperature inside each cubicle is indicated and high and low temperature annunciated on the main control board.

4. All the controls and instruments are electric and electronic, except for the fail-open, air-operated shutdown service water valves, which open to allow flow through the cooling coils.

9.4.5.4.3 Safety Evaluation

a. All power and control circuits for each fan meet IEEE 279, IEEE 308, and IEEE 323 criteria.

b. Unit heaters conform to the National Electric Code.

c. All the fans, coil cabinets, and piping meet the criteria of the appropriate system Quality Group Classification listed in Section 3.2.

d. All equipment and surrounding structures are designed for Seismic Category I.

e. High temperature inside any pump room is alarmed on the main control board. The failure of the SSW pump room cooling equipment will cause high temperature inside the cubicle but will not preclude pump operation. The operator may continue to operate the this SSW pump or he may start a standby pump with its corresponding cooling equipment.

f. A failure analysis is presented in Table 9.4-16.

9.4.5.4.4 Testing and Inspection

NOTE: The following paragraph is considered historical:

All equipment is factory inspected and tested in accordance with the applicable equipment specifications, quality assurance requirements, and codes. System ductwork and erection of equipment is inspected during various construction stages for compliance with engineering specifications. Preoperational tests are performed on all system components and the system is balanced for the design air and water flows and system design pressures. Controls, interlocks, and safety devices on each fan and coil cabinet are cold checked, adjusted, and tested to ensure proper operation. A final integrated preoperational test is conducted with all equipment and controls operational to verify system performance. A temperature survey is performed to verify the system's ability to maintain space temperature.

Maintenance is performed on a scheduled basis based on manufacturer's recommendations, plant operating experience, and good engineering practice.

9.4.5.5 CGCS Equipment Cubicle Cooling System

This system serves the combustible gas control system (CGCS) equipment cubicles when the CGCS system is required for service. Each CGCS cubicle is provided with an independent cooling system.

9.4.5.5.1 Design Bases

This system removes equipment heat from the CGCS equipment cubicles and maintains temperature within equipment limits. The CGCS equipment cubicle cooling system is designated as an EAS system.

9.4.5.5.1.1 Safety Design Bases

a. The CGCS equipment cubicle cooling system consists of a fan-coil unit for each CGCS equipment cubicle and is designed to remove equipment heat during the operation of the CGCS equipment under all normal and abnormal operating conditions.

b. Each system is designed to conform to Seismic Category I requirements.

c. Each fan-coil unit is powered from safety-related buses serving its associated CGCS equipment. The instrumentation and power supply for the system are designed to meet IEEE 279 and IEEE 308 criteria.

d. The CGCS system is designed with redundancy. Thus, the fan coil unit provided for each cubicle is comprised of singular components.

e. Each CGCS fan-coil unit is provided with cooling water from the shutdown service water system, which is discussed in Subsection 9.2.1.2.

f. Each fan-coil unit is capable of dissipating the heat produced by the operation of corresponding CGCS equipment and limiting the inside temperature to a maximum of 185°F during all station conditions. Each fan and coil is capable of continuous operation in an ambient temperature of 185°F.

9.4.5.5.1.2 Power Generation Design Bases

a. The CGCS equipment cubicle cooling system is required to operate when the corresponding CGCS equipment is operating.

b. The CGCS equipment cooling system is designed to operate independently of the corresponding CGCS in the test mode only.

9.4.5.5.2 System Description

a. The schematic diagram of the CGCS equipment cubicle cooling system is shown in Drawing M05-1111-4. Equipment parameters of principal system components are listed in Table 9.4-17.

b. Each of the CGCS equipment cubicle fan-coil units consists of a cooling coil contained in a housing and a fan. Supply air ducts are provided for air distribution in each cubicle. The air circulated through each cubicle is cooled by its respective fan-coil unit.

c. Water from the shutdown service water system with a maximum inlet water temperature is 95°F and minimum inlet temperature of 32°F is used in cooling coils.

d. During all station operating conditions, when the CGCS equipment is operating, the fan-coil units operate to circulate air through the cooling coils.

e. Controls and instrumentation:

1. A motor-operated valve controlling the flow of water in each fan-coil unit can be operated remote manually and opens automatically when its respective CGCS equipment starts. The fan in each fan-coil unit is electrically interlocked to start when the respective CGCS equipment starts. The fan-coil units can also be operated remote manually by switches provided on the local control panel.

2. All the controls and instruments are electric or electronic.

9.4.5.5.3 Safety Evaluation

a. All power and control circuits for each unit meet IEEE 279 and IEEE 308 criteria.

b. All the fan-coil units and piping meet the criteria of the appropriate Quality Group Classification listed in Section 3.2.

c. All equipment and surrounding structures are designed for Seismic Category I.

d. A failure analysis is presented in Table 9.4-18.

9.4.5.5.4 Testing and Inspection

All equipment is factory inspected and tested in accordance with the applicable equipment specifications, quality assurance requirements, and codes. System ductwork and erection of

equipment are inspected during various construction stages for compliance with engineering specifications. Construction tests are performed on all mechanical components and the system is balanced for the air and water flows and system design pressures. Controls, interlocks, and safety devices on each fan-coil unit are cold checked and tested to ensure their proper operation. A temperature survey is performed to verify the system's ability to maintain space temperature.

Maintenance is performed on a basis generally in accordance with the equipment manufacturer's recommendations and station practices.

Equipment operation and performance are observed during functional testing of the CGCS system.

9.4.6 Containment Building Ventilation and Continuous Containment Purge Systems

These systems serve the containment building and consist of containment building ventilation and continuous containment purge systems. These systems are independent with the exception that they share common supply and exhaust ducts/air piping as shown in Drawings M05-1110 and M05-1111, Sheets 1, 2, 3 and 5. The continuous containment purge system is normally used during plant modes 1, 2 and 3 (power operation, startup, and hot shutdown) and may also be used in Modes 4 and 5 (cold shutdown and refueling). Preferably, the high volume containment building ventilation system may be used on an unlimited basis during cold shutdown (mode 4)and refueling (mode 5) and within limitations specified in the Technical Specifications during plant modes 1, 2 and 3 (on an as needed basis to control containment airborne radioactivity concentrations). Administrative controls will be implemented so that the high volume ventilation system and continuous purge system are not used simultaneously.

General Electric Mark III Containments are designed to be accessible and ventilated during normal reactor operation and during normal shutdown and refueling operation. Continuous accessibility to a Mark III containment is necessary to perform maintenance, testing and surveillance on various equipment inside containment that is vital to continued safe operation of the plant. To provide ventilation during normal reactor operation and during normal shutdown and refueling operation, Clinton Power Station has two 12-inch diameter penetrations in the containment (one for supply and one for exhaust). To provide ventilation during cold shutdown, plant refueling,and normal operating conditions (within limitations specified in the Technical Specifications), Clinton Power Station has two 36-inch diameter penetrations in the containment (one for supply and one for exhaust). Redundant containment isolation valves are provided on each containment ventilation penetration. These containment isolation valves close on any one of the following signals:

a. High Drywell Pressure

b. Low Reactor Water Level

c. High Radiation in the Containment Building Exhaust Duct

d. High Radiation in the Containment Building Refueling Pool Exhaust Duct

e. High Radiation in the Continuous Containment Purge Exhaust.

Normal ventilation in the containment is needed to control the concentrations and the spread of airborne radioactivity in the areas of the containment, as discussed in Subsection 12.3.3. In addition, it is used for controlling the containment pressure with respect to atmosphere.

Radiological consequences due to the occurrence of a postulated LOCA when the containment is being ventilated/purged during normal operation is given in detail in Subsection 9.4.6.3, Paragraph h (Q&R 480.17).

The design of the containment ventilation system has been revised to include the continuous containment purge system and the containment building ventilation system.

Two 12-inch continuous containment purge system penetrations, with two redundant isolation valves (1VR006A and 1VR006B) in the supply line (1VR09C12) and two redundant isolation valves (1VR007A and 1VR007B) in the exhaust line (1VR14A12) are provided for continuous containment purge.

Two 36-inch containment penetrations, with two redundant containment isolation valves (1VR001A and 1VR001B) in the supply line (1VR01B36) and two redundant containment isolation valves (1VQ004A and 1VQ004B) in the exhaust line (1VQ02B36) are provided for containment ventilation during cold shutdown, plant refueling, and normal plant operating conditions (on an as-needed basis within limitations specified in the Technical Specifications to control containment airborne radioactivity concentrations).

Each of these four (normally closed) 36-inch containment isolation valves has 4-inch bypass valves (1VR002A, 1VR002B, 1VQ006A, and 1VQ006B) which are used post-LOCA when the Standby Gas Treatment System may be used as a backup to the hydrogen recombiners. These bypass valves are normally closed and can be opened post-LOCA.

These penetrations and valves are identified in Drawings M05-1111 and M05-1110. One penetration provides the supply air and the other is used for exhaust.

9.4.6.1 Design Bases

9.4.6.1.1 Safety Design Bases

9.4.6.1.1.1 Containment Building Ventilation System Safety Design Bases

a. The containment building ventilation system is used during plant refueling operations and cold shutdown. Its use during normal operation is limited to an as-needed basis within limitations specified in the Technical Specifications to control containment airborne radioactive concentrations. Therefore this system has no safety design bases except for the containment building penetration isolation valves.

b. The supply air penetration through the containment wall is equipped with two redundant isolation valves in series to ensure containment isolation. Mechanical stops restrict the opening (36-inch) of these valves to 50°. In addition, there is a 4-inch valved bypass line around each of these valves. This is also true of the exhaust air even though the exhaust air uses the drywell purge system penetration through the containment building. The containment building ventilation system isolation valves at the containment penetration and the

intermediate pipe between the valves are required during and after all abnormal station operating conditions to maintain the containment boundary integrity. The main isolation valves are spring loaded, air operated, and fail closed on loss of electric power or station air. This part of the system is designed for Seismic Category I Classification and Safety Class 2. The isolation valves close upon receiving a LOCA signal, or a high radiation signal from any of the following radiation monitoring system, thus preventing an accidental release of radioactivity:

1. containment building exhaust duct radiation monitors;

2. containment building fuel pool vent plenum radiation monitors;

3. continuous containment purge system exhaust duct radiation monitors.

c. Safety classification for containment isolation is provided in Table 3.2-1.

d. Debris screens are provided to protect containment isolation valves from material that may become entrained in the ductwork. A total of 8 debris screens are installed in the containment building ventilation systems, as shown in Drawings M05-1110 and M05-1111, Sheets 1, 2, 3, and 5. One screen is located upstream of containment outboard isolation valve 1VR001A on the 36-inch inlet line to the containment. Another screen is installed downstream of containment inboard isolation valve 1VR001B on the same line to protect the isolation valves in the event air flow is reversed due to containment pressure being higher than that in the ductwork outside the containment. Three screens are installed on the exhaust side to protect the isolation valves 1VQ004A and 1VQ004B and the 4-inch bypass valve 1VQ006B. One screen is located in the 36-inch line 1VQ05A just upstream of valve 1VQ003. The second screen is located in the 24-inch line 1VQ02A near the junction of the 24-inch line 1VQ02A near the junction of the 24-inch and 36-inch lines. The third screen is located upstream of bypass valve 1VQ006B.

The screens are designed to the following criteria:

1. Screens are installed as close as reasonably possible (1 to 6 pipe diameters) to their respective isolation valves, given the physical arrangement of the ductwork. There are no normally open piping taps or internal components located between the screens and the isolation valves.

2. Screens are Seismic Category I and are able to withstand LOCA pressures.

3. The piping between the valve and screen is Seismic Category I, ASME Section III, Class 2.

4. The size of the openings in the debris screens is 1" in diameter (except debris screen 1VQ03M which has 1/2 inch diameter openings). (Q&R 480.19)

9.4.6.1.1.2 Continuous Containment Purge System Safety Design Bases

a. The continuous containment purge system is not required to function in any but the normal station operating conditions to limit airborne radioactivity and maintain proper pressure boundaries in the containment. Therefore, this system has no safety design bases except for the containment building penetration isolation valves.

b. The supply air penetration through the containment wall is equipped with two redundant isolation valves in series to ensure containment isolation. This is also true of the exhaust air. The continuous containment purge system isolation valves at the containment penetration and the intermediate pipe between the valves are required during and after all abnormal station operating conditions to maintain the containment boundary integrity. The main isolation valves are spring loaded, air operated, and fail closed on loss of electric power or station air. This part of the system is designed for Seismic Category I Classification and Safety Class 2. The isolation valves close upon receiving a LOCA signal, or a high radiation signal from any of the following radiation monitoring design systems, thus preventing an accidental release of radioactivity:

1. containment building exhaust duct radiation monitors;

2. containment building fuel pool vent plenum radiation monitors;

3. continuous containment purge system exhaust duct radiation monitors.

c. Safety classification for containment isolation is provided in Table 3.2-1.

d. Three debris screens are installed on the 12-inch continuous containment vent and purge system as shown on Drawing M05-1111, Sheets 1, 2, 3 and 5. On the inlet line, one screen is installed upstream of containment outboard isolation valve 1VR006A and another screen is installed downstream of containment inboard isolation valve 1VR006B. On the exhaust line a screen is installed upstream of containment inboard isolation valve 1VR007B.

The screens are designed to the same criteria established in Subsection 9.4.6.1.1.1, Paragraph d. (Q&R 480.19)

9.4.6.1.2 Power Generation Design Bases

9.4.6.1.2.1 Containment Building Ventilation System Power Generation Design Bases

a. The containment building ventilation system includes fan-coil cooling units supplied with cooling water from the plant chilled water system and is designed to limit the maximum temperatures in generally accessible areas of the containment building to 104°F. The potentially contaminated cubicles will be limited to a maximum of 122°F, with the exception of the steam tunnel which will be limited to a maximum of 142°F. The temperature maintained in each area conforms to the equipment ambient requirements in that area. The fan coil cooling units are to be used continuously.

b. The system provides up to 16,270 cfm of filtered outdoor air to purge the building of possible contamination.

Ventilation air is routed from accessible clean areas to areas of potential contamination before exhausting to the common station HVAC vent.

c. The system transfers air from the fuel transfer pool periphery and exhausts it to the common station HVAC vent. An option is provided to exhaust air from the containment dome area if required.

d. The system components are designed with sufficient redundancy to ensure the power generation objective.

e. The containment building ventilation supply air system operates manually prior to and during drywell occupancy, during a normal plant refueling shutdown, and as required upon operator initiation except when the containment building is isolated or the continuous containment purge system is in operation. The exhaust air system operates manually prior to an during drywell occupancy, during a normal plant refueling shutdown, and as required upon operator initiation except when the containment building is isolated or when the drywell purge system or the continuous containment purge system is operating. Isolation dampers at each supply and exhaust fan close when their respective fans are not running. There is an additional isolation damper at the supply air inlet which closes when the supply air system is not operating. The purpose of this damper is to protect the system cooling coil from freezing when the system is not operating. A control damper in the supply stream ductwork regulates the flow of air to maintain the containment building at a negative pressure with respect to the outside.

f. The exhaust air is not normally treated. Airborne radioactivity is monitored at the main containment building exhaust before it exits at the common station HVAC vent using the continuous air monitoring system. Upon an indication of high airborne particulate or iodine activity, the operator can filter the exhaust air through the drywell purge filter train A, B, and C (one or two standby).

9.4.6.1.2.2 Continuous Containment Purge System Power Generation Design Bases

a. The continuous containment purge system is designed to prevent the spread of airborne contamination by maintaining the areas where contamination may originate, such as the radiation cubicles, at a negative pressure compared to the general areas. The system is sized so as to maintain the airborne radiation levels in containment general areas at or below thirty percent of the derived air concentration under the design basis conditions of operation. Individual fan-coil cooling units (local recirculation type) served by the plant chilled water system limit the maximum temperatures in generally accessible areas of the containment building to 104°F. The temperature in potentially contaminated cubicles is similarly limited to a maximum of 122°F, except for the steam tunnel which is limited to 142°F. The temperature maintained in each area conforms to the equipment ambient or environmental qualification requirements in that area.

b. The system provides up to 8000 cfm of filtered, tempered as necessary, outdoor supply air to purge the building of possible contamination. Purge air is routed

from accessible clean areas to areas of potential contamination before exhausting to the common station HVAC vent. Air is not exhausted from the refueling pool periphery and the dome area when this system is in use.

c. The system components are designed with sufficient redundancy to ensure the power generation objective.

d. The supply and exhaust sides of the continuous purge system are designed to operate manually and continuously except when the containment building is isolated or when the high volume containment ventilation system is operating. The supply and exhaust systems also operate when the system is operating in filtered mode and either drywell purge filter train fan A or B is operating at a reduced capacity of 8000 cfm. Isolation dampers at each supply and exhaust fan close when their respective fans are not running. There is an additional isolation damper at the supply air inlet which closes when the supply air system is not operating. A control damper in the supply air path regulates the flow of air to maintain the containment building at a negative pressure with respect to the outside.

e. The exhaust air is normally not treated. Airborne radioactivity is monitored in the continuous containment purge exhaust before it exits at the common station HVAC vent using the continuous air monitoring system. Upon an indication of high airborne particulate or iodine activity, the operator can select to route the exhaust through either drywell purge filter train A or B to filter the exhaust before releasing it to the outside.

9.4.6.2 System Description

9.4.6.2.1 Containment Ventilation System Description

a. The schematic design, including nominal system flow rates, of the containment building ventilation system is shown in Drawing M05-1111, Sheets 1, 2, 3, and 5. The type and rated capacity of principal system components are listed in Table 9.4-19.

b. When in operation, the containment building ventilation system supplies filtered, heated, or cooled air to the general areas through a central fan system consisting of an outside air intake, filters, a heating coil, a cooling coil, two 100% of full capacity supply air fans, and supply air ductwork.

c. The ventilation air is supplied to accessible areas on elevations 755 feet 0 inch and 789 feet 1 inch and on the operating floor and is induced to areas of greater contamination potential.

d. The potentially contaminated cubicles are maintained at a slightly lower pressure than the surrounding accessible areas and, therefore, the air flows from the accessible areas to these shielded cubicles before it is exhausted.

e. One of the two 100% capacity exhaust fans provides the ventilation air through exhaust ducts from potentially contaminated areas and discharges the air to the common station HVAC vent.

f. The air from the refueling floor is exhausted through the exhaust boxes provided at approximately 4-foot intervals around the periphery of the fuel pool. These exhaust boxes are connected to common exhaust ducts leading outside the containment building to the exhaust fans.

g. The exhaust duct from the refueling floor is provided with radiation monitors which will automatically initiate containment building ventilation isolation and standby gas treatment startup on high radiation detection. The maximum time required to completely close the isolation valve after high radiation is detected is specified to be 6 seconds.

   The average velocity of potentially contaminated effluents inside the exhaust duct is designed to have a travel time of a minimum of 9.9 seconds. On this basis, the length of the exhaust duct from the refueling floor radiation monitors to the isolation valves is such that the release of contaminated air to the outside atmosphere is either precluded or is insignificant.

h. The containment building ventilation isolation valves are designed for fail-safe operation. These valves are operated by spring-loaded air cylinders which fail closed on loss of station air or electric power. The containment building ventilation isolation valves are sized as small as practical. The main valves (not the bypass valves) close on high drywell pressure, low reactor water level, high radiation in the ventilation exhaust duct, high radiation in the refueling pool exhaust duct, and high radiation in the continuous containment purge exhaust duct. The bypass valves are normally closed and can only be opened with a keylocked switch.

i. The containment building is maintained at a minimum of 1/4-inch H_2O negative pressure with respect to outdoor atmosphere by the containment building ventilation system when it is operating.

j. More air is exhausted from the operating floor than is supplied to draw air from adjacent accessible areas, thereby minimizing the possibility of potentially contaminated air from the operating floor migrating to clean areas of the containment building.

k. Pressure control dampers are employed between clean and potentially contaminated areas and are of the backflow type and fail closed. This minimizes the backflow of contaminated air to clean areas when there is a loss of power and subsequent fan system shutdown.

l. Fan-coil units are located in accessible and inaccessible areas to remove generated heat and to maintain temperatures within the required ranges. Chilled water is supplied to each fan-coil unit from the plant chilled water system described in Subsection 9.2.8.3.

m. Each fan-coil unit consists of a fan and a cooling coil enclosed in a sheet metal housing. Supply air ducts are provided for air distribution wherever required. Return air to the units is unducted in most cases.

n. Chilled water is circulated through the central ventilation unit cooling coil to provide cooling for the supply air system.

o. Controls and instrumentation:

1. Each fan and isolation valve is controlled by hand switches on the main control board. Other instruments are provided in a locally mounted control panel. Pertinent system flow rates and temperatures are indicated on the local control panel and alarmed on the main control board.

2. Instrumentation is provided for monitoring system operating variables. High system temperature and high differential pressure across the supply air filters are annunciated on the local control board. Loss of airflow, low system temperature, and high and low containment building differential pressure are annunciated on the main control board.

3. The process radiation monitoring system provided for the fuel transfer pool and containment building exhausts is covered under Section 7.6.

4. Standby fans are interlocked to start automatically on loss of the companion operation fan.

5. Controls are pneumatic and electric.

9.4.6.2.2 Continuous Containment Purge System Description

a. The schematic design, including nominal system flow rates, of the continuous containment purge system is shown in Drawing M05-1111, Sheets 1, 2, 3, and 5. The type and rated capacity of principal system components are listed in Table 9.4-19A.

b. The continuous containment purge system supplies filtered, heated, or cooled air to the general areas through a central fan system consisting of an outside air intake, filters, a heating coil, a cooling coil, a secondary cooling coil, two 100% of full capacity supply air blowers, and supply air piping and ductwork.

c. The purge air is supplied, via the continuous containment purge/containment building ventilation common supply air ductwork in the containment, to accessible areas on elevations 755 feet 0 inch and 789 feet 1 inch and on the operating floor elevation 828 feet 3 inches and is induced to areas of greater contamination potential. Normally, no air is exhausted from the operating floor whenever the continuous containment purge system is operating.

d. The potentially contaminated cubicles are maintained at a slightly lower pressure than the surrounding accessible areas and, therefore, the air flows from the accessible areas to these shielded cubicles before it is exhausted.

e. One of the two 100% capacity exhaust blowers provided exhausts the ventilation air through exhaust ducts from potentially contaminated areas and discharges the air to the common station HVAC vent. Alternately, the operator has the option to

exhaust the air through the drywell purge filter units (A or B) before being discharged to the common station HVAC vent.

f. The continuous containment purge system isolation valves are designed for fail-safe operation. These valves are operated by spring-loaded air cylinders which fail closed on loss of station air or electric power. The continuous containment purge system isolation valves are sized as small as practical. These valves close on high drywell pressure, low reactor water level, high radiation in the ventilation exhaust duct, high radiation in the refueling pool exhaust duct, and high radiation in the continuous containment purge exhaust.

g. The containment building is maintained at a minimum of 1/4-inch H_2O negative pressure with respect to the outdoor atmosphere by the continuous containment purge system during normal station operating conditions.

h. Pressure control dampers are employed between clean and potentially contaminated areas and are of the backflow type and fail closed. This minimizes the backflow of contaminated air to clean areas when there is a loss of power and subsequent fan system shutdown.

i. Fan-coil units are located in accessible and inaccessible areas to remove generated heat and to maintain temperatures within the required ranges. Chilled water is supplied to each fan-coil unit from the plant chilled water system described in Subsection 9.2.8.3.

j. Each fan-coil unit consists of a fan and a cooling coil enclosed in a sheet metal housing. Supply air ducts are provided for air distribution wherever required. Return air to the units is unducted in most cases.

k. Chilled water is circulated through the central ventilation unit primary cooling coil and secondary cooling coil to provide cooling for the supply air system.

l. Controls and instrumentation:

1. Each blower and isolation valve is controlled by hand switches on the main control board. Other instruments are provided in a locally mounted control panel.

2. Instrumentation is provided for monitoring system operating variables during normal station operating conditions. Pertinent system flow rates, fan and filter differential pressure, and temperatures are indicated on the local control panel. Abnormal system flow rates and temperatures are alarmed on the main control board. Abnormal filter differential pressures are alarmed on the local control panel, which gives a common trouble alarm on the main control board.

3. The process radiation monitoring system provided for the continuous containment purge exhaust duct is covered under Section 7.6.

4. Standby fans are interlocked to start automatically on loss of the companion operation fan.

5. Controls are pneumatic and electric.

9.4.6.3 Safety Evaluation

9.4.6.3.1 Containment Ventilation System Safety Evaluation

a. The containment building ventilation system is not safety-related and is not required to assure either the integrity of the reactor coolant pressure boundary or the capability to shut down the reactor and maintain it in a safe shutdown condition.

b. The operation of the containment building penetration isolation valves is required to assure that the offsite dose rates in 10 CFR 100, or, for the accidents analyzed using Alternative Source Terms, the limits of 10 CFR 50.67 are not exceeded. Redundant, air-operated, spring-loaded, fail-closed valves are provided to assure isolation. The small bypass line valves are motor operated, normally closed, and can only be opened by a keylocked switch on the main control board.

c. The ventilation air supplied in accessible areas is induced through potentially contaminated cubicles by a positive exhaust system. Isolation dampers of the fail closed type are provided in the air flow path to the potentially contaminated areas to preclude backflow of contaminated air into clean areas during system operation on loss of the ventilation system.

d. The system incorporates features to assure its reliable operation over the full range of required operations. These features include the installation of redundant principal system components.

e. The isolation valves at the containment building ventilation supply and exhaust duct penetrations fail closed on a loss of electric power or station air. Operator action is required to reopen these valves. The normally closed motor-operated 4-inch bypass valves fail as positioned on a loss of electric power.

f. Potentially contaminated effluent rising from the surface of the fuel transfer pool is entrained in the normal ventilation air and drawn into the exhaust openings located above the water level. Redundant process radiation monitors in the pool's exhaust duct and in the main exhaust duct leaving the containment building trip when high radiation is detected. This causes isolation of the containment building and activation of the standby gas treatment system. The size and length of the fuel transfer pool exhaust duct is designed to assure that the travel time of effluents from the process radiation monitor to the isolation valve is a minimum of 9.9 seconds, which is greater than the closing time of 6 seconds for the isolation valve.

g. A failure analysis is presented in Table 9.4-20.

h. Radiological consequences due to the occurrence of a postulated LOCA when the containment building ventilation system is in operation have been examined to

determine compliance with the dose criteria set forth in BTP CSB 6-4. The calculated exclusion area boundary doses are 5.3×10^{-2} rem and 8.6×10^{-2} rem for the thyroid and whole body, respectively. These doses are a small fraction of the 10CFR 100 guideline values.

Major assumptions used in the dose analysis are:

1. A double-ended guillotine break of the recirculation line is assumed to occur instantaneously. This accident was chosen because it represents the worst break for purposes of core performance and cladding integrity and consequently the highest doses.

2. Closure of the isolation valves in the purge system will isolate the containment within 7 seconds (this includes a valve closure time of 6 seconds as given in Table 6.2-47 and an additional maximum time of 1 second for conservatism). During this period, reactor coolant blowdown was conservatively estimated to be 3.4×10^5 lbs.

3. Forty percent of the blowdown was assumed to flash into steam. Conservatively, it was assumed that the entire iodine activity in the flashed fraction of the total blowdown was instantaneously released to the containment atmosphere at the instant of the accident. Plating out of iodine was ignored. Furthermore, retention of iodines in the suppression pool was ignored, though in actuality the flashed activity would be at first dumped into the pool and would evolve into the containment only subsequently.

4. Iodine specific activity in the reactor coolant was conservatively assumed to be 0.2 μCi/g of I-131 dose equivalent.

5. Complete mixing is assumed in the entire containment free volume.

6. Containment air was assumed to be released through two 36-inch purge lines for 7 seconds. The isolation valves are assumed to be fully open for one second and, conservatively, to close linearly over the next six seconds. Flow rates through the open purge lines correspond to the maximum containment pressure of 1.5 psig during the release period (Ref. Fig. 6.2-2) were used to determine a total flow of 1,350 lbs to the environment. This is conservative, since it ignores lower flow rates due to lower containment pressures and partial closing of the isolation valves at times prior to 7 seconds.

7. No credit was allowed for iodine removal by charcoal adsorbers on the containment exhaust lines.

8. Exclusion area boundary X/Q of 1.78×10^{-4} seconds per cubic meter as given in CPS-FSAR Subsection 15.6.5 was used in the dose calculation.

9.4.6.3.2 Continuous Containment Purge System Safety Evaluation

a. The continuous containment purge system is not safety-related and is not required to assure either the integrity of the reactor coolant pressure boundary or the capability to shut down the reactor and maintain it in a safe shutdown condition.

b. The operation of the continuous containment purge system penetration isolation valves is required to assure that the offsite dose rates in 10 CFR 100, or, for the accidents analyzed using Alternative Source Terms, the limits of 10 CFR 50.67 are not exceeded. Redundant, air-operated, springloaded, fail-closed valves are provided to assure isolation.

c. The purge air supplied in accessible areas is induced through potentially contaminated cubicles by a positive exhaust system. Isolation dampers of the fail closed type are provided in the air flow path to the potentially contaminated areas to preclude backflow of contaminated air into clean areas on loss of the continuous purge system.

d. The system incorporates features to assure its reliable operation over the full range of normal station operations. These features include the installation of redundant principal system components.

e. The isolation valves at the continuous containment purge supply and exhaust pipe penetrations fail closed on loss of electric power or station air. A switch is provided on the main control board to reopen the valves.

f. Redundant process radiation monitors in the continuous containment purge exhaust pipe leaving the containment building trip when high radiation is detected. This causes isolation of the containment building and activation of the standby gas treatment system.

g. A failure analysis is presented in Table 9.4-20A.

h. Radiological consequences due to the occurrence of a postulated LOCA when the containment is being purged during normal operation have been examined on a pre-AST basis to determine compliance with the dose criteria set forth in BTP CSB 6-4. The calculated exclusion area boundary doses are 3.5×10^{-4} rem and 6.0×10^{-7} rem for the thyroid and whole body, respectively. These doses are a small fraction of the 10 CFR 100 guideline values.

   Major assumptions used in the dose analysis are:

   1. A double-ended guillotine break of the recirculation line is assumed to occur instantaneously. This accident was chosen because it represents the worst break for purposes of core performance and cladding integrity and consequently the highest doses.

   2. Closure of the isolation valves in the purge system will isolate the containment within 7 seconds.

3. Iodine specific activity in the reactor coolant was conservatively assumed to be 0.2 μCi/g of I-131 dose equivalent.

4. Containment air was assumed to be released through two 12-inch purge lines for 7 seconds.

5. No credit was allowed for iodine removal by charcoal adsorbers on the containment exhaust lines.

6. Exclusion area boundary X/Q of 1.78×10^{-4} seconds per cubic meter as given in CPS-FSAR Subsection 15.6.5 was used in the dose calculation.

9.4.6.4 Testing and Inspection

9.4.6.4.1 Containment Ventilation System Testing and Inspection

All equipment is factory inspected and tested in accordance with the applicable equipment specification, quality assurance requirements, and codes. System ductwork and erection of equipment is inspected during various construction stages. Preoperational tests are performed on all system components and the system is balanced for the design air and water flows and system operating pressures. Controls, interlocks, and safety devices on each system are checked, adjusted, and tested to ensure the proper sequence of operation. A final integrated preoperational test is conducted with all equipment and controls operational to verify the system performance. A temperature survey is performed to verify the system's ability to maintain space temperature.

Maintenance is performed on a scheduled basis based on manufacturer's recommendations, plant operating experience, and good engineering practice. The standby equipment is operated occasionally to provide on-line checking, testing of performance, or equalize wear.

9.4.6.4.2 Continuous Containment Purge System Testing and Inspection

All equipment is factory inspected and tested in accordance with the applicable equipment specification, quality assurance requirements, and codes. System piping, ductwork and erection of equipment is inspected during various construction stages. Preoperational tests are performed on all system components and the system is balanced for the design air and water flows and system operating pressures. Controls, interlocks and safety devices on each system are checked, adjusted, and tested to ensure the proper sequence of operation. A final integrated preoperational test is conducted with all equipment and controls operational to verify the system performance.

Maintenance is performed on a scheduled basis based on manufacturer's recommendations, plant operating experience, and good engineering practice.

The system is in operation during normal plant operation. The standby equipment is operated occasionally to provide on-line checking, testing of performance, or equalize wear.

9.4.7 Drywell HVAC Systems

The drywell HVAC systems are comprised of the drywell cooling system and drywell purge system.

9.4.7.1 Drywell Cooling System

The drywell cooling system serves the drywell area during normal plant operating conditions.

9.4.7.1.1 Design Bases

The system, which is non-safety-related, maintains temperatures of the various drywell zones within limits of equipment requirements.

9.4.7.1.1.1 Safety Design Bases

a. The drywell cooling HVAC system is not required to function during abnormal plant operating conditions and, therefore, has no safety design-basis.

b. The drywell cooling HVAC system components for Unit 1 and the ductwork are supported in accordance with Seismic Category I criteria to preclude damage to a safety-related system after a safe shutdown earthquake (SSE).

c. The safety design basis for the chilled water system serving the drywell cooling HVAC system is discussed in Subsection 9.2.8.2.

9.4.7.1.1.2 Power Generation Design Bases

a. The drywell cooling HVAC system for Unit 1 is designed with sufficient redundancy to ensure continuous operation under normal plant operating conditions.

b. The drywell cooling HVAC system is designed to limit the operating temperature in various areas of the drywell in conformance with equipment ambient temperature ratings.

c. The design of the system permits periodic inspection and testing of the principal system components.

d. The power supply to the drywell cooling unit fans is designed to allow uninterrupted operation if the normal a-c power is not available.

9.4.7.1.2 System Description

a. The schematic design, including nominal system flow rates, of the drywell cooling HVAC system is shown in Drawing M05-1109. The type and rated capacity of principal system components are listed in Table 9.4-21.

b. The drywell cooling HVAC system for Unit 1 continuously circulates drywell air through fancoil units to limit the maximum temperature in the following areas:

	Maximum Temperature
1. Vicinity of recirculation pump motors	135° F

2.	CRD area (during reactor scram)	135° F 185° F
3.	Balance of drywell	150° F (1)

(1)Temperatures in localized areas may exceed 150°F provided equipment qualification and component/structure integrity are maintained.

The design includes four 50% capacity fan-coil units for each station unit located within the drywell with two fan-coil units normally operating and two serving as standby. Each fan-coil unit consists of a supply fan and chilled water cooling coils.

Air is distributed through ductwork and around the reactor pressure vessel support skirt and up through the annular space between the reactor vessel insulation and the reactor shield wall. A minimum supply air temperature of 80°F is required for cooling the reactor pressure vessel skirt area.

Air is also supplied to the recirculating pump areas, CRD area, bellows area, vessel head area, and area of main steam isolation valves. The return air flows unducted back to the operating fan-coil units.

c. System description for chillers and chilled water piping, which provide chilled water to the chilled water coils, is discussed in Subsection 9.2.8.2. For a description of plant chilled water supplied to two supplemental drywell cooling units, refer to Subsection 9.2.8.3.

d. Controls and instrumentation:

1. Control switches are provided for each fan-coil unit on the main control board. Instrumentation is located on the main control board and on local panels.

2. Standby equipment is operated manually from the main control room.

3. Temperature of various areas are indicated in the main control room.

4. Controls are electric or electronic.

9.4.7.1.3 Safety Evaluation

a. The drywell cooling HVAC system is not safety-related.

b. The system incorporates features to ensure its reliable operation over the full range of normal plant operations. These features include the installation of redundant principal system components.

c. Fan motor trip for the original HVAC system is alarmed on the main control board. Fan motor trip is alarmed for the supplemental units.

d. Instrumentation is provided to monitor air temperature in various zones in the drywell. Leakage detection system instrumentation also includes an indication of chilled water temperature differential across the upper drywell cooling coils on the main control board, with high differential temperature annunciated on the main control board.

e. The drywell cooling HVAC system components and ductwork are supported to conform to Seismic Category I requirements.

f. The failure analysis is presented in Table 9.4-22.

9.4.7.1.4 Testing and Inspection

a. All equipment was factory inspected and tested in accordance with the applicable equipment specifications and codes. System ductwork and erection of were are inspected during various construction stages. Construction tests were performed on all mechanical components and the system is balanced for the design air and water flows and system operating pressures. Controls, interlocks, and safety devices on each system are cold checked, adjusted, and tested to ensure the proper sequence of operation. A temperature survey is performed to verify the system's ability to maintain space temperature.

b. Maintenance is performed on a scheduled basis based on manufacturer's recommendations, plant operating experience, and good engineering practice.

c. The system is in operation during normal plant operation. Operation of standby equipment is occasionally rotated to provide on-line checking and testing of performance.

9.4.7.2 Drywell Purge System

This system serves all areas of the drywell and containment.

9.4.7.2.1 Design Bases

9.4.7.2.1.1 Safety Design Bases

a. The drywell purge system is not required to function in any but the normal station operating condition and, therefore, has no safety bases except for the containment building penetration isolation valves.

b. Each (36-inch or 12-inch) system air penetration through the containment building boundary is equipped with two redundant isolation valves in series to ensure containment isolation. In addition, there is a small 4-inch valved line bypassing each 36-inch isolation valve. These bypass valves are used post-LOCA when the standby gas treatment system is used as a backup to the hydrogen recombiner. These isolation valves and the intermediate pipe between them are required during and after all abnormal station operating conditions to maintain the containment boundary integrity. For a detailed description of these valves, see Subsection 6.2.4. The 36-inch and 12-inch isolation valves are spring loaded, air-operated, and fail closed on loss of electrical power or instrument air. This part of

the system is designed for Seismic Category I classification and Safety Class 2. The main 36-inch or 12-inch valves (not the bypass) close on high drywell pressure, low reactor water level, and high radiation in the ventilation or purge exhaust or refueling pool exhaust duct. The bypass valves are normally closed and can be opened post-LOCA by a keylocked switch.

c. The system air penetrations through the drywell boundary are provided with redundant isolation valves. Mechanical stops restrict the opening (24-inch) of these valves to 50°.

d. The purge lines are interconnected to the containment ventilation exhaust lines for purging containment after a LOCA when the containment atmosphere is below 3 psig. This line within the secondary containment is designed for Seismic Category I.

9.4.7.2.1.2 Power Generation Design Bases

a. Drywell purging for airborne activity control is not permissible during plant operating modes 1, 2 or 3 since drywell supply air penetration/isolation valves 1VQ01A and 1VQ01B must remain closed during normal power operation, startup, or hot shutdown conditions.

A slight differential pressure, between the drywell and the containment, is anticipated to occur during temperature transients in the drywell (e.g. during reactor startup). Control of drywell pressure during these time is needed to prevent an unwarranted reactor scram. Therefore, to accommodate the need for drywell pressure control during such transients or for other reasons as allowed by the Technical Specifications, the exhaust line of the drywell purge system may be opened during operating modes 1, 2 and 3 with the following restrictions:

1. While venting the drywell, the containment shall not be vented or purged; and

2. The drywell purge supply line shall be sealed closed (as defined by the Standard Review Plan, Section 6.2.4, Item II.6.f).

Drywell purging during plant operating modes 4 and 5 (cold shutdown and refueling) is unlimited and will be performed prior to personnel access as required under these conditions.

b. The drywell purge system is designed to purge the drywell at a nominal rate of greater than three air changes per hour (using the containment building ventilation system) and filter the air to the allowable release limits before it is exhausted to the atmosphere. The 8000 cfm continuous containment purge system will not normally be used to purge the drywell prior to drywell access.

c. The drywell purge system is designed to filter containment building air following a release of radioactivity in the building. This filtration will only be allowed when the containment building pressure is below 3 psig because of equipment design limitations.

d. The system is designed with sufficient redundancy to provide alternate and equivalent purge capability in case a system component is inoperative during drywell purge.

e. The design of the system permits periodic inspection and testing of the principal system components.

f. Isolation dampers at each filter train close when the respective equipment is not operating.

g. In the event of a loss of offsite electric power, the drywell purge is shutdown, except for the low-flow fans which are connected to the diesel generators.

h. Provision has been made to use the Drywell Purge System to evacuate potentially radioactive gases from the reactor vessel head area prior to removal of the reactor head if determined to be warranted by Radiation Protection Supervision.

9.4.7.2.2 System Description

a. The schematic design, including nominal system flow rates, of the drywell purge system is shown in Drawing M05-1110. The type and rated capacity of principal system components are listed in Table 9.4-23.

b. The number of operating dampers and valves in the drywell are kept to a minimum to assure reliability.

c. The system consists of three full-capacity filter trains, associated duct, dampers, and controls.

d. Each filter train consists of the following components listed in the direction of full air flow:

1. moisture separator,

2. prefilter,

3. heating coil,

4. upstream HEPA filter,

5. charcoal filter,

6. downstream HEPA filter, and

7. exhaust fan.

e. The drywell is purged by shutting down the normal containment building exhaust fans, starting the purge exhaust fan on one filter train and opening the appropriate exhaust and inlet valves on the drywell purge connections.

The exhaust air removed from the drywell is made up by allowing some ventilation air from the containment building to flow into the drywell through isolation valves.

To minimize the containment airborne radioactivity contribution due to removal of the reactor pressure vessel head, the head may be ventilated by the drywell purge exhaust system. If the drywell purge system is used, RPV head purging is accomplished by removing the blind flange on N-8 nozzle and connecting the head to a purge line via a flexible hose. The purged air is removed from the vessel head, mixed with exhausted drywell air, and is routed to the drywell purge filter units for treatment.

The purge air is exhausted from the drywell, mixed with exhausted containment building ventilation air, and is routed to the purge filter units for treatment before release to the common station HVAC vent.

f. After an accidental release of radioactivity in the containment building, and when conditions permit, one or two drywell purge filter trains can be started to filter the containment ventilation air.

g. The containment building isolation valves are designed for fail-safe operation. These valves are operated by spring-loaded air cylinders which fail closed on loss of electrical power or instrument air. The containment building isolation valves are sized as small as practical. The specification for these valves satisfies the lifetime radiation exposure requirements listed in Table 3.11-5.

h. Controls and instrumentation

1. Each fan is controlled by handswitches on the main control board.

2. Controls are pneumatic and electric.

3. Instrumentation is provided for monitoring system operating variables during normal station operating conditions. Pertinent filter train pressure drops and temperatures are indicatated locally, System purge flow is indicated both locally and in the main control room. High system temperature and purge exhaust low flow are annunciated on the main control board. High pressure difference across the filters is annunciated on local panels.

9.4.7.2.3 Safety Evaluation

a. The drywell purge system is not safety-related and is not required to operate to assure either the integrity of the reactor coolant pressure boundary or the capability to shut down the reactor and maintain it in a safe shutdown condition except for the containment isolation valves. The drywell purge valves are normally closed fail closed valves.

b. The operation of the containment building penetration isolation valves is required to assure that the offsite dose rates in 10 CFR 100, or, for the accidents analyzed using Alternative Source Terms, the limits of 10 CFR 50.67 are not exceeded. Redundant, air-operated, spring-loaded, fail closed valves are provided to assure isolation.

c. The system incorporates features to assure its reliable operation over the full range of normal station operations. These features include the installation of redundant principal system components.

The drywell purge isolation valves close on any of the following signals:

1. containment exhaust duct high radiation, or

2. containment building refueling pool exhaust duct high radiation, or

3. high drywell pressure (2 psig), or

4. low reactor water level (Level 2), or

5. continuous containment purge exhaust high radiation.

d. The containment isolation valves fail closed on a loss of control power or control air. Operator action is required to reopen the valves.

e. The purge lines and valves connected to the containment will meet the criteria of the Quality Group Classification of those components listed in Subsection 3.2.2.

f. High-temperature and high-high temperature signals from each charcoal adsorber are transmitted to the main control room for annunciation. The high-high temperature signal also provides a permissive signal that allows that station operator to flood the adsorber by opening a deluge valve with a control switch on the main control board.

g. A failure analysis is presented in Table 9.4-24.

9.4.7.2.4 Testing and Inspection

a. Equipment is factory inspected and tested in accordance with the applicable equipment specifications and codes. System ductwork, piping and erection of equipment was inspected during various construction stages. Preoperational tests are performed on system components and the system is balanced for the design air flows and system operating pressure. Controls, interlocks, and safety devices on each system are checked, adjusted, and tested to ensure the proper sequence of operation. A final integrated preoperational test is conducted with all equipment and controls operational to verify the system performance.

b. Maintenance is performed on a scheduled basis based on manufacturer's recommendations, plant operating experience, and good engineering practice.

c. Operation of the standby equipment is rotated periodically to provide on-line checking and testing of performance.

d. Provisions are made for periodic testing of each filter train. The tests will include differential pressure measures on filter, dioctyl phthalate (DOP) testing of HEPA filters, and Freon bypass testing of charcoal adsorbers.

9.4.8 Off-Gas Vault Refrigeration System

The system serves the off-gas charcoal adsorber vault and the air handling units room.

9.4.8.1 Design Bases

9.4.8.1.1 Safety Design Bases

The off-gas vault refrigeration system is not required to operate in any but normal station operating conditions and therefore has no safety design bases.

9.4.8.1.2 Power Generation Objectives

a. The off-gas vault refrigeration system is designed to maintain the charcoal adsorber vault in the range between -20° F and +50° F, and to maintain the air handling units room in the range of 0°F to +70°F.

b. The radwaste building HVAC system exhausts a small amount of air from the charcoal adsorber vault to maintain it at -0.1 in.(min.) H_20 under normal operating conditions.

c. The system is designed with sufficient redundancy to ensure the power generation objectives.

9.4.8.2 System Description

a. The schematic design of the off-gas vault refrigeration system is shown in Drawings M05-1108 and M05-1121-3. Nominal size and type of principal system components are listed in Table 9.4-25.

b. The off-gas vault refrigeration system can function to initially reduce the charcoal adsorber vault ambient and its contents from the inital temperature (as high as 150°F) to less than 50°F.

c. The refrigeration system operates only when the supply air fan is running and the proper air flow is established.

d. The charcoal adsorber vault is refrigerated by two completely independent refrigeration loops. Each loop consists or a refrigeration skid (two compressors, one common condenser, heat exchangers, and interconnecting piping) and an air handling unit skid (cooling coils, defrost heaters, drain pan electric heater, supply air fan, and housing). The two air handling unit skids are interconnected with ductwork. The water-cooled condensers and the compressor oil coolers are cooled by the plant chilled water system. Chilled water flow to the condenser is modulated by a water regulating valve to maintain the design head pressure. Water flow to the compressor oil coolers is modulated by a water regulating valve to maintain the oil temperature at the operating point.

e. The system is shut down when the defrost timer initiates the cooling coil electric defrost heater by means of shutting off the supply fan.

f. The off-gas system is equipped with a gas cooler defrost heater to assist in defrosting the gas cooler upon detection of high differential pressure on the gas side which indicates frost buildup within the cooler piping. However, in order to prevent a possible fire in the charcoal beds, this heater shall not be used.

Alternate defrost methods are procedurally controlled and consist of shutting down the vault cooling system and using the vault electric blast heater and heat-circulating fan.

g. The system defrost cycle is terminated by a temperature sensor when the cooling coil temperature reaches 50°F.

h. The charcoal adsorber vault is designed for -20°F to 150°F as it may occasionally be necessary to heat the vault to 150°F by using an electric-blast coil and a heating-circulating fan interconnected to the refrigeration system ductwork. The purpose of the heating cycle is to facilitate deicing the cooler and drying the charcoal.

i. Controls and instrumentation: Each refrigeration skid is controlled by handswitches located on local control panel furnished with the skid. Instruments are located on the ductwork and the local control panel. Controls are pneumatic and electric.

9.4.8.3 Safety Evaluation

a. The operation of the off-gas vault refrigeration system is not required to assure either of the following conditions:

1. the integrity of the reactor coolant pressure boundary, and

2. the capability to shut down the reactor and maintain it in a safe shutdown condition.

b. A failure analysis is presented in Table 9.4-26.

c. However, the system incorporates features that assure its reliable operation over the full range of normal station operations. These features include the installation of redundant principal system components.

9.4.8.4 Testing and Inspection

All equipment was factory inspected and tested in accordance with the applicable equipment specifications and codes. System ductwork and erection of equipment was inspected during various construction stages. Construction tests were performed on all system components and the system is balanced for the design air and water flows and system operating pressures. Controls, interlocks, and safety devices on each system are cold checked, adjusted, and tested to ensure the proper sequence of operation. A final integrated preoperational test was conducted with all equipment and controls operational to verify the system performance. A heat balance is made on all cooling components to verify specified capacity.

Maintenance is performed on a scheduled basis based on manufacturer's recommendations, plant operating experience, and good engineering practice.

9.4.9 Machine Shop Area HVAC System

This system serves all areas of the machine shop, including the equipment decontamination room, cold tools room, personnel decontamination change facility, hot tools room, weld shop, change room, loading dock, truck aisle, and controlled material storage. This system operates during all normal station conditions.

9.4.9.1 Design Bases

9.4.9.1.1 Safety Design Bases

The machine shop HVAC system is not required to function in any but the normal station operating conditions and, therefore, has no safety bases.

9.4.9.1.2 Power Generation Design Bases

a. The machine shop HVAC system is designed to maintain a quality environment suitable for personnel health and safety in the machine shop. The machine shop HVAC system, in conjunction with the station heating and the plant chilled water systems, shall maintain inside temperatures within a range of 65°F to 85°F. The temperature in each area conforms to the equipment requirement in that area.

b The system provides a quantity of filtered outdoor air to purge the area of noxious odors, harmful fumes, and any possible contamination. Ventilation air is routed from accessible, clean areas to areas of potential contamination before exhausting to the common station HVAC vent.

c. The machine shop exhaust is designed to induce most of the ventilation air through the areas of noxious fumes, harmful odors, and possible contamination. This air is processed through dust collectors, prefilters, and HEPA filters (as required) before it is monitored for radioactivity and released to the atmosphere.

d. Both the supply air system and the exhaust air system operate manually and continuously. Isolation dampers at each supply fan, each exhaust fan, and each filter package close when the respective equipment is not operating. There is an additional isolation damper at the supply air inlet which closes when the supply air system is not operating. An automatic damper in the supply system ductwork regulates the flow of air to maintain the machine shop at negative 0.125 inches w.g. with respect to atmosphere.

e. In the event of a loss of offsite electric power, the machine shop ventilation system is shut down.

9.4.9.2 System Description

a. The schematic design of the machine shop ventilation system is shown on Drawing M05-1107. Vendor rated capacity and type of principal system components are listed in Table 9.4-27.

b. The machine shop ventilation system supplies filtered, heated or cooled air to the general areas through a central fan system consisting of an outside air intake,

filters, a heating coil, a cooling coil, two 50%-of-full-capacity supply air fans, and supply air ductwork.

c. The ventilation air is supplied to the accessible areas of the machine shop and induced to areas of greater contamination potential.

d. The potentially contaminated areas are maintained at a slightly lower pressure than the surrounding clean areas and, therefore, the air flows from the clean areas to these potentially contaminated cubicles before it is exhausted.

e. The two 50% capacity exhaust fans induce the ventilation air through the exhaust ducts from the potentially contaminated areas and discharge the air to the common station HVAC vent.

f. Air exhausted directly from the machinery may be routed through a dust collector, prefilters, and high-efficiency particulate filters (HEPA) before being routed to the exhaust fans.

g. Air exhausted directly from the equipment decontamination room, hot tools room, and the weld shop may be routed through prefilters and high efficiency particulate filters (HEPA) before being routed to the exhaust fans.

The Offsite Dose Calculation Manual (ODCM) requires these filters to be used only when the projected doses due to gaseous effluent releases to areas at and beyond the site boundary would exceed a specified limit.

h. Air exhausted from the machine shop general area, cold tools room, change room, and the toilets is routed directly to the exhaust fans.

i. A packaged plant chilled water air handling unit is provided for the controlled material storage, truck aisle, and loading dock areas.

j. Pressure control dampers are employed between clean and potentially contaminated areas and are of the backflow type and fail closed. This minimizes the backflow of contaminated air to clean areas when there is a loss of power and subsequent fan system shutdown.

k. Fan coil units are located in accessible and inaccessible areas to remove generated heat and to maintain temperatures within the required ranges. Chilled water is supplied to each fan-coil unit from the plant chilled water system described in Subsection 9.2.8.3.

l. Each fan-coil unit consists of a fan and a cooling coil enclosed in a sheet metal housing.

m. Chilled water is circulated through the central ventilation unit cooling coil to provide cooling for the supply air system.

n. Controls and instrumentation

1. Each fan and each exhaust filter package is controlled by handswitches located on local control panels. Pertinent system operating parameters are also indicated locally and on the local control panels. Trouble on local control panels is annunciated on the main control board.

2. Controls are pneumatic and electric.

3. Instrumentation is provided for monitoring system operating variables during normal station operating conditions. The loss of airflow; high and low system temperature; and high differential pressure across the supply air filter, dust collector and exhaust filter package filters are annunciated on the local control panel. Trouble on the local panel is annunciated on the main control board.

9.4.9.3 Safety Evaluation

a. The machine shop ventilation system is not safety-related and is not required to assure either the integrity of the reactor coolant pressure boundary or the capability to shut down the reactor and maintain it in a safe shutdown condition.

b. The ventilation air supplied in clean areas is induced through potentially contaminated areas by a mechanical exhaust system. Isolation dampers of the fail-closed type are provided in the airflow path to the potentially contaminated areas to preclude backflow of contaminated air into clean areas on loss of the ventilation system.

c. The system incorporates features to assure its reliable operation over the full range of normal station conditions.

d. A failure analysis is provided in Table 9.4-28.

9.4.9.4 Testing and Inspection

All equipment is factory inspected and tested in accordance with the applicable equipment specifications and codes. System ductwork and erection of equipment is inspected during various construction stages. Preoperational tests are performed on all mechanical components and the system is balanced for the design air and water flows and system operating pressures. Controls, interlocks, and safety devices on each system are checked, adjusted, and tested to ensure the proper sequence of operation. A final integrated preoperational test is conducted with all equipment and controls operational to verify the system performance.

Maintenance is performed on a scheduled basis based on manufacturer's recommendations, plant operating experience, and good engineering practice.

The system is in operation during normal plant operation. Operation of the standby equipment is rotated occasionally to provide on-line checking and testing of performance.

9.4.10 Circulating Water Screen House Ventilation System

This system serves all areas of the circulating water screen house. This system operates during all normal station operating conditions.

9.4.10.1 Design Bases

9.4.10.1.1 Safety Design Bases

The screen house ventilation system is not required to function in any but the normal station operating conditions and, therefore, has no safety bases.

9.4.10.1.2 Power Generation Design Bases

a. The screen house ventilation system is designed to limit the maximum temperature in the screen house to 122° F. The temperature maintained in this area conforms to the equipment ambient requirements.

b. Some ventilation air is routed from the screen house to the chlorinator room before being exhausted to the atmosphere.

c. The fire pump room exhaust fans are designed to limit the maximum temperature in the fire pump rooms to 122° F when the fire pump is activated. The temperature in this area conforms to the fire pump ambient requirement.

d. The system operates manually and continuously. Isolation dampers at each supply fan close when its respective fan is not running. An automatic damper in the supply system regulates the flow of outside air, based upon outsided ambient air temperature. Automatic dampers control the temperature of the air in winter by mixing return and outdoor air.

e. In the event of a loss of offsite electric power, the screen house ventilation system is shut down.

f. All of the air is either directly exhausted to the atmosphere, or returns unducted to the mixing plenum.

9.4.10.2 System Description

a. The schematic design of the circulating water screen house ventilation system is shown on Drawing M05-1106-3. Vendor ratings and type of principal system components are listed in Table 9.4-29.

b. The circulating water screen house ventilation system supplies air to the general areas through a central fan system in one of two modes. During periods with high outside air temperature, one or two exhaust fans operate. Each main intake louver is associated with an exhaust fan and thus opens when its exhaust fan starts. During periods with low outside air temperature, both supply fans operate, neither of the two exhaust fans operates and both of the main intake louvers are also closed. In this mode, the supply air temperature is regulated by mixing outdoor air with return air.

c. One of the main exhaust fan dampers will always be open when any supply fan is running, to keep the screen house pressure at approximately atmospheric.

d. The fire pump room louver and exhaust fan damper open when the temperature in the room reaches 90° F. The fan will start when the temperature reaches 115° F. The fan will stop when the temperature falls to 105° F, and the louver and exhaust fan damper will close when the temperature falls to 80° F.

e. The chlorinator room is maintained at a slightly lower pressure than the screen house and, therefore, the air flows from the screen house to the chlorinator room before it is exhausted. Both chlorinator room exhaust fans operate manually and continuously.

f. A pressure control damper is employed between the screen house and the chlorinator room and it is of the backflow type and fails closed. This minimizes the backflow of chlorine to the screen house when there is a loss of power and subsequent fan shutdown.

g. Controls and Instrumentation

1. Each fan is controlled by handswitches located on local control panels. Pertinent system flow rates and temperatures are also indicated on the local control panels. The main control board has no control interface with this system.

2. Controls are pneumatic and electric.

3. Instrumentation is provided for monitoring system operating variables during normal station operating conditions. Abnormal conditions are annunciated on the local control panel.

9.4.10.3 Safety Evaluation

a. The screen house ventilation system is not safety-related and is not required to assure either the integrity of the reactor coolant pressure boundary or the capability to shut down the reactor and maintain it in a safe shutdown condition.

b. The ventilation air supplied to the screen house is induced through the chlorinator room by a positive exhaust system. Isolation dampers of the fail-closed type are provided in the air flow path to the chlorinator room to preclude backflow of chlorine into the screen house on loss of the ventilation system.

c. A failure analysis is presented in Table 9.4-30.

9.4.10.4 Testing and Inspection

All equipment was factory inspected and tested in accordance with applicable equipment specifications and codes. System ductwork and erection of equipment was inspected during various construction stages. Preoperational tests were performed on all mechanical components and the system is balanced for the design air flows and system operating pressures. Controls, interlocks, and safety devices on each system are checked, adjusted, and tested to ensure the proper sequence of operation. A final integrated preoperational test was conducted with all equipment and controls operational to verify the system performance.

Maintenance is performed on a scheduled basis based on manufacturer's recommendations, plant operating experience, and good engineering practice.

9.4.11 Laboratory HVAC System

The laboratory HVAC system serves the laundry area, laboratory area, bioassay area (including storage rooms, laboratory, and office), and the counting room on elevation 737 feet 0 inch in the control building.

9.4.11.1 Design Bases

9.4.11.1.1 Safety Design Bases

a. The laboratory HVAC system is not required to function in any but normal plant operating conditions.

b. Safety related temperature detectors are located at El. 751'-0" above Laboratory humidification steam lines. These temperature detectors detect any increase in temperature due to failure of humidifier boiler steam lines. High temperature shuts off humidifier boiler and alarms.

9.4.11.1.2 Power Generation Design Bases

a. The laboratory HVAC system is designed to maintain an environment suitable for personnel comfort, health, and safety in the laboratories, laundry rooms, and offices.

b. The system maintains the laboratory area at approximately 75°F and 40% to 50% relative humidity. The system maintains the washer-dryer maintenance area to a maximum of 104° F. The system maintains the laundry area at 70°F to 80°F and 40% to 60% relative humidity.

c. The system induces air through fume hoods and the washer-dryer maintenance area. The air is then filtered for particulates prior to being released to the atmosphere via the common station HVAC vent.

d. The counting room has dedicated HVAC components which are designed to maintain an environment suitable for personnel comfort, health, and safety.

e. The system maintains the counting room at approximately 70° F and 43% to 47% relative humidity.

f. On loss of offsite power, the system is shut down.

g. Radiation monitors are provided in the exhaust air ductwork downstream of the union of the separate exhaust paths from the laundry area and laboratory fume hoods.

9.4.11.2 System Description

a. The schematic design of the laboratory HVAC system is shown in Drawing M05-1118. Vendor rating and type of principal system components are listed in Table 9.4-31.

b. The laboratory HVAC system is an outside air system with recirculation from clean areas and consists of the following equipment:

1. Laboratory supply train:

The supply train consists of an outside air intake, filters, electric preheating coil, two 50% capacity makeup air fans (centrifugal), a humidifier with a humidification steam boiler, two 50% capacity supply fans (centrifugal), and a dual-duct air-conditioning unit with an electric heating coil and a chilled water cooling coil. The dual-duct system distributes conditioned air through locally mounted mixing boxes. Some outside air passes through an electric heating coil and is supplied as auxiliary air to the laboratory fume hoods and washer-dryer maintenance area.

2. Laboratory exhaust train:

The exhaust train consists of a lint filter, two 50% filter packages consisting of a prefilter and HEPA filter, and two 50% capacity centrifugal fans.

c. The HVAC system for the counting room is a 100% outside air system and consists of the following equipment:

1. Counting room supply train:

The supply train consists of an outside air intake and two 100% capacity equipment trains. Each equipment train consists of a filter package containing a prefilter and HEPA filter, an electric heating coil, and a centrifugal fan. In addition, train A contains a chilled water coil train B contains a refrigerant coil, and both trains share a humidifier and an electric reheat coil.

2. Counting room exhaust train:

The exhaust train consists of two 100% capacity centrifugal fans.

d. The chilled water coils are served by the plant chilled water system described in Subsection 9.2.8.3.

e. The counting room, offices, and instrument storage rooms are kept at a slightly positive pressure, while the laundry rooms, high level laboratory, and radiation chemistry laboratory are kept at a slightly negative pressure with respect to the adjacent area. A pressure control damper is used to maintain the counting room positive pressure.

f. An electric preheating coil warms the supply air. A second electric heating coil further heats some of the supply air which is auxiliary air for the fume hoods and washer-dryer maintenance area. The majority of the supply air is heated to the final supply temperature by the electric heating coil in the dual duct system.

g. Control and instrumentation:

1. System handswitches and controls are provided locally, or on either of the two local control panels (LCP). Pertinent system operating parameters are indicated either locally or on these panels.

2. Failure of a function important to the system operation such as high differential pressures across filters, low differential pressure across the fan, and chilled water coil freeze conditions is annunciated on the LCP.

3. Two indicator lights are provided in the radiation chemistry office to indicate which LCP has an alarm condition.

4. Controls are pneumatic and electric.

9.4.11.3 Safety Evaluation

a. The operation of the laboratory HVAC system is not required to assure either of the following conditions:

1. the integrity of the reactor coolant pressure boundary, or

2. the capability to shut down the reactor and maintain it in a safe shutdown condition.

b. A failure analysis is not presented since the laboratory HVAC system is not safety-related.

9.4.11.4 Testing and Inspection

All equipment was factory inspected and tested in accordance with the applicable equipment specifications and codes. System ductwork and erection of equipment were inspected during various construction stages. Preoperational tests were performed on all system components and the system is balanced for the design air and water flows and system operating pressures. Controls, interlocks, and safety devices on each system are cold checked, adjusted, and tested to ensure the proper sequence of operation. A final integrated preoperational test was conducted with all equipment and controls operational to verify the system performance.

Maintenance is performed on a scheduled basis based on manufacturer's recommendations, plant operating experience, and good engineering practice.

9.4.12 Service Building HVAC System

The service building HVAC system serves the service building during normal plant operation conditions.

9.4.12.1 Design Bases

9.4.12.1.1 Safety Design Bases

The service building HVAC system is not required to function in any but normal plant operating conditions and, therefore, has no safety design bases. Backup cooling systems for security related areas in the Service Building are capable of operating during a loss of off-site power or when normal HVAC systems are undergoing maintenance.

9.4.12.1.2 Power Generation Design Bases

a. The service building HVAC system is designed to maintain a quality environment suitable for personnel comfort, health, and safety in the service building.

b. Records held in long-term vault storage by Records Management or in vendor provided archival storage are subject to the following:

- Temperature: 70°F maximum temperature for film, 40°F - 75°F for paper or radiographs

- Relative Humidity: 30-40% for film, 30-60% for paper or radiographs.

c. The areas served by this system are provided with a minimum quantity of outside air for odor dilution and to offset exhaust and exfiltration air flows.

9.4.12.2 System Description

a. The schematic design of the service building HVAC system is shown in Drawing M05-1112, Sheets 10 through 12. Vendor rating and type of principal system components are listed in Table 9.4-32.

b. The service building HVAC system is comprised of six independent subsystems which serve their respective areas as follows:

1. The service building exterior zone HVAC system serves exterior offices and classrooms on the first and second floors of the service building.

2. The service building interior Zone 1 HVAC system serves first floor interior spaces, and the conditioned basement areas.

3. The service building interior Zone 2 HVAC system serves second floor interior spaces.

4. The locker room HVAC system serves the first floor locker room.

5. The record storage facility has an independent HVAC system.

6. The backup security area cooling systems serve each Computer Equipment room in the basement, the Security Control room, Electrical Equipment room, and Battery room on the first floor.

c. The first three service building HVAC systems are comprised of an outside air louver, a mixing plenum, a supply air filter, a blow-through type of air handling unit, a hot air duct, a cold air duct, individual zone mixing boxes and return air fan. The air handling unit consists of a fan, a chilled water cooling coil, and an electric heating coil.

The locker room HVAC system is comprised of an outside air louver, a supply air filter, a draw-through type of air handling unit, and a shared exhaust air fan. The air handling unit consists of a fan, an electric heating coil, and a chilled water cooling coil.

The record storage facility HVAC system is comprised of a recirculation HVAC system with direct expansion cooling coil (with condensing unit on the roof) and electric reheat coils. The system receives a small amount of air from interior Zone 2 HVAC system to maintain the records storage facility at positive pressure with respect to surrounding areas.

The backup security area cooling system consists of four independent outdoor air cooled condensers and four indoor direct expansion fan coil units. The Security Control room and each Computer Equipment room have separate, independent cooling units. The Electrical Equipment room and Battery room are cooled by a single independent fan-coil unit. Two isolation dampers are provided in the normal HVAC supply ducts to the Security Control room, Battery room and Electrical Equipment room to prevent circulation of warm air to these areas during shutdown of the Service Building chilled water system.

d. The cooling coils for all systems except the record storage facility and the backup security area cooling system are served by chilled water from the service building chilled water system described in Subsection 9.2.8.4.

e. Exhaust fans for conference rooms, toilets, showers, supply fans, and locker rooms are provided as necessary.

f. The service building is maintained at a slightly positive pressure to preclude infiltration.

g. The minimum outside air quantity replaces all mechanical exhaust and exfiltration.

h. Controls and instrumentation - system handswitches and controls are provided locally or in a locally mounted control panel. Pertinent system operating parameters are monitored and displayed locally or on this panel.

Controls are pneumatic and electric.

9.4.12.3 Safety Evaluation

a. The operation of the service building HVAC system is not required to assure either of the following conditions:

1. the integrity of the reactor coolant pressure boundary, or

2. the capability to shut down the reactor and maintain it in a safe shutdown condition.

b. A failure analysis is not presented since the service building HVAC system is not safety-related.

9.4.12.4 Testing and Inspection

All equipment is factory inspected and tested in accordance with the applicable equipment specifications and codes. System ductwork and erection of equipment is inspected during various construction stages. Preoperational tests are performed on all mechanical components and the system is balanced for the design air and water flows and system operating pressures. Controls, interlocks, and safety devices on each system are cold checked, adjusted, and tested to ensure the proper sequence of operation. A final integrated preoperational test is conducted with all equipment and controls operational to verify the system performance.

Maintenance is performed on a scheduled basis based on manufacturer's recommendations, plant operating experience, and good engineering practice.

9.4.13 Radwaste Building Area Ventilation System

This system serves the radwaste building except for the machine shop during normal station operation conditions. This system operates during all normal station conditions.

9.4.13.1 Design Bases

9.4.13.1.1 Safety Design Bases

The radwaste building ventilation system is not required to function in any but the normal station operating conditions and, therefore, has no safety bases.

9.4.13.1.2 Power Generation Design Bases

a. The radwaste building ventilation system is designed to limit the maximum temperature in generally accessible areas to 104° F and potentially contaminated cubicles to 122° F. The temperature maintained in each area conforms to the equipment ambient requirement in that area.

b. The system provides a quantity of filtered outdoor air to purge the building of possible contamination. Ventilation air is routed from accessible clean areas to areas of potential contamination before exhausting to the common station HVAC vent stack.

c. The system is designed with sufficient redundancy to ensure the power generation objective.

d. The radwaste building exhaust system is designed to induce ventilation air through the potentially contaminated areas and process this air through prefilters and HEPA filters prior to being released to the atmosphere via the common station HVAC vent.

e. In the event of a loss of offsite electric power, the radwaste building ventilation system is shut down.

f. The radwaste building ventilation system is designed to maintain the temperature in the radwaste monitoring area at approximately 73° F.

g. A minimum quantity of outdoor air is continuously provided to maintain a positive pressure in the radwaste operations center with respect to the surrounding areas to preclude the infiltration of potentially contaminated air.

h. An automatic damper in the supply system duct work regulates the flow of air to maintain the Radwaste building at approximately 0.25 inch w.g., with the exception of the machine shop area which is maintained at 0.125 inch w.g., and the storeroom area which is maintained at 0.00 inch w.g., negative pressure with respect to atmospheric pressure.

9.4.13.2 System Description

a. The schematic design of the radwaste building ventilation system is shown on Drawing M05-1114. Vendor rating and type of principal system components are listed in Table 9.4-33.

b. The radwaste building ventilation system supplies filtered, heated, or cooled air to the general areas through a central fan system consisting of an outside air intake, filters, a heating coil, a cooling coil, two 100%-of-full-capacity supply air fans, and supply air ductwork.

c. The ventilation air is supplied to accessible areas in the mezzanine, grade, intermediate, and basement floors, and induced to areas of greater contamination potential.

d. The potentially contaminated cubicles are maintained at a slightly lower pressure than the surrounding accessible areas and, therefore the air flows from the accessible areas to these shielded cubicles before it is exhausted.

e. The radwaste building ventilation system functions to maintain the radwaste monitoring areas at a temperature of approximately 73° F through a central system consisting of a packaged water-cooled air-conditioning unit. A slight positive pressure in this area is maintained with respect to adjacent areas to preclude the infiltration of potentially contaminated air.

f. Air vented from contaminated tanks is ducted through a charcoal filter to the exhaust system where necessary.

g. One of the two 100% capacity exhaust fans provided induces the ventilation air through exhaust ducts from potentially contaminated areas. This air is then processed through prefilters and HEPA filters before being discharged to the common station HVAC vent.

h. By exhausting more air than is being supplied, a negative differential pressure with respect to outdoors of 0.25 inch w.g. is maintained in the Radwaste building

with the exception of the machine shop, which is maintained at negative 0.125 inch w.g. with respect to outdoors. The storeroom area is maintained at atmospheric pressure.

i. Pressure control dampers are employed between clean and potentially contaminated areas and are of the backflow type and fail closed. This minimizes the backflow of contaminated air to clean areas when there is a loss of power and subsequent fan system shutdown.

j. Fan coil units are located in appropriate areas to remove generated heat and to maintain temperatures within the required ranges. Chilled water is supplied to each fan-coil unit from the plant chilled water system described in Subsection 9.2.8.3.

k. Each fan-coil unit consists of a fan and a cooling coil enclosed in a sheet metal housing. Supply air ducts are provided for air distribution whenever required. Return air to the units is unducted.

l. Chilled water is circulated through the central ventilation unit cooling coil to provide cooling for the supply air system.

m. Controls and instrumentation:

1. Each exhaust filter package and the radwaste building and storeroom supply and exhaust fans are controlled by handswitches located on local control panels and in the radwaste operations center. Pertinent system flow rates and temperatures are indicated on the local control panels. Trouble on local panels is annunciated on the radwaste operation center board.

2. Standby fans are interlocked to start automatically on loss of the companion operating fan.

3. Controls are pneumatic and electric.

4. Instrumentation is provided for monitoring system operating variables during normal station operating conditions. The loss of air flow, high and low system temperature, high and low radwaste building differential pressure, and high differential pressure across the supply air and exhaust air filters are annunciated on the local control panel.

9.4.13.3 Safety Evaluation

a. The radwaste building ventilation system is not safety-related and is not required to assure either the integrity of the reactor coolant pressure boundary or the capability to shut down the reactor and maintain it in a safe shutdown condition.

b. A failure analysis is presented in Table 9.4-34.

c. The ventilation air supplied in accessible areas is induced through potentially contaminated cubicles by a positive exhaust system. Isolation dampers of the fail-

closed type are provided in the airflow path to the potentially contaminated areas to preclude backflow of contaminated air into clean areas on loss of the ventilation system.

d. The system incorporates features to assure its reliable operation over the full range of normal station conditions. These features include the installation of redundant principal system components.

9.4.13.4 Testing and Inspection

All equipment is factory inspected and tested in accordance with the applicable equipment specification and codes. System ductwork and erection of equipment is inspected during various construction stages. Preoperational tests are performed on all system components and the system is balanced for the design air and water flows and system operating pressures. Controls, interlocks, and safety devices on each system are checked, adjusted, and tested to ensure the proper sequence of operation. A final integrated preoperational test is conducted with all equipment and controls operational to verify the system performance.

Maintenance is performed on a scheduled basis based on manufacturer's recommendations, plant operating experience, and good engineering practice.

Provisions are made to allow changeout of exhaust filters when the system is in operation.

Provisions are made to allow periodic testing of HEPA filters including injection and sampling apparatus for dioctyl phthalate (DOP) testing.

The system is in operation during normal plant operation. Operation of the standby equipment is rotated occasionally to provide on-line checking and testing of performance.

9.4.13.5 Instrumentation Application

The radwaste building ventilation system instrumentation and controls are described in detail in Subsections 7.7.1.18 and 7.7.2.18.

Either of the two redundant supply fans or the two redundant exhaust fans can be manually started from either the radwaste monitoring area or from their respective local control panels. The isolation damper for each fan opens on fan start and closes on fan stop. After the fans are started, radwaste building supply air temperature and building air pressure are controlled automatically. In the event of failure of either a supply fan or exhaust fan, the respective standby fan starts automatically, unless the building air pressure requires either supply or exhaust fans to trip.

Air differential pressures at various locations within the radwaste building and storeroom are averaged and indicated in the radwaste monitoring area. The radwaste building average differential pressure is also indicated on the local control panels. Supply and exhaust air filters differential pressures and various air temperatures are indicated locally or on the local control panels. Loss of air flow, high and low air temperature, high filter differential pressures, and high and low building air pressures are alarmed on the local control panels. Any system malfunction which is alarmed locally actuates common radwaste building ventilation system trouble alarms in the radwaste operation center.

The controls and instrumentation are pneumatic or electric. The control dampers are pneumatically actuated. The electric power source is not safety-related; on loss of power, the radwaste building ventilation system will shut down.

TABLE 9.4-1
CONTROL ROOM HVAC SYSTEM

NAME OF EQUIPMENT	NUMBER, TYPE, QUANTITY AND VENDOR RATED CAPACITY
A. Air Handling Equipment Trains	
Type	Built-up
Quantity	2
Components of each air-handling equipment train	
1. Coil Cabinet	0VC10SA 0VC10SB
Type	Blow-through
Quantity	2
a. Cooling Coil	0VC06AA, 0VC06AB
Type	Chilled Water
Capacity (Btu/hr)	2,175,000
b. Heating Coil	0VC01AA, 0VC01AB
Type	Electric
Capacity (kW)	70
2. Supply Air Fans	0VC03CA 0VC03CB
Type	Vaneaxial
Quantity	2
Drive	Direct
Capacity (cfm @ .071 lbs/ft^3 density & blade setting of 25)	75,032
Total pressure (in. H_2O)	9.77
Motor (hp)	150
3. Supply Air Filter Packages	0VC07SA 0VC07SB
Type	Disposable cartridge
Quantity	1 filter bank per package
Media	Class fiber (waterproof, fire retardant)
Efficiency (% by NBS dust spot method)	85
Capacity (scfm)	71,000
Pressure drop (clean) (in. H_2O)	0.35
Pressure drop (dirty) (in. H_2O)	1.0

TABLE 9.4-1
CONTROL ROOM HVAC SYSTEM (Continued)

NAME OF EQUIPMENT	NUMBER, TYPE, QUANTITY AND VENDOR RATED CAPACITY
4. Recirculation Charcoal Filters	
Type	2-in.-thick vertical bed
Media	Impregnated charcoal
Quantity of Media (lb)	5325
Assigned iodine decontamination removal efficiency (%)	70
Capacity (scfm)	71,000
5. Return Air Fans	0VC04CA 0VC04CB
Type	Vaneaxial
Drive	Direct
Quantity	2
Capacity (cfm @ .071 lbs/ft^3 density & blade setting of 39)	75,032
Total pressure (in. H_2O)	6.87
Motor (hp)	125
6. Minimum Outside Air Intake dampers	0VC01YA, 0VC01YB, 0VC03YA, 0VC03YB, 0VC115YA, 0VC115YB
Type	Opposed Blade
Quantity	6
Capacity (scfm)	4000
Leakage at 10 inch w.g. ΔP (scfm)	Vendor Specification: 104 (for 0VC03YA/YB & 0VC115YA/YB)* 97 (for 0VC01YA/YB)*
Closure Time (seconds)	2
7. Makeup Air Filter Package Isolation Dampers	0VC02YA, 0VC02YB, 0VC06YA, 0VC06YB
Type	Opposed Blade
Quantity	4
Capacity (scfm)	4000

TABLE 9.4-1
CONTROL ROOM HVAC SYSTEM (Continued)

	NAME OF EQUIPMENT	NUMBER, TYPE, QUANTITY AND VENDOR RATED CAPACITY
	Leakage at 10 inch w.g. ΔP(cfm)	Vendor Specification: 104 (for 0VC06YA/YB)* 97 (FOR 0VC02YA/YB)*
	Closure Time (seconds)	2
B.	Refrigeration Units	
	See Table 9.2-19	
C.	Chilled Water Circulating Pumps	
	See Table 9.2-19	
D.	Makeup Air Filter Packages	0VC09SA 0VC09SB
	Type	Package
	Quantity	2
	Components of makeup air filter trains	
1.	Fans	0VC05CA 0VC05CB
	Type	Centrifugal
	Drive	Direct
	Quantity	2
	Capacity (scfm)	3000
	Static Pressure (in. H_2O)	11.3
	Motor (hp)	30
2.	Prefilters-Medium Filter	
	Type	Disposable cartridge
	Quantity	1 Bank
	Efficiency (% by NBS dust spot method)	85
	Media	Glass Fiber
	Pressure drop (clean) (in. H_2O)	0.2
	Pressure drop (dirty) (in. H_2O)	1.0
3.	Heating Coil	0VC02AA 0VC02AB
	Type	Electric
	Quantity	1
	Capacity (kW)	16

TABLE 9.4-1
CONTROL ROOM HVAC SYSTEM (Continued)

NAME OF EQUIPMENT	NUMBER, TYPE, QUANTITY AND VENDOR RATED CAPACITY
4. HEPA Filters	
Type	High Efficiency
Quantity	2 filter banks per train
Media	Glass Fiber, Waterproof, Fire Resistant
Efficiency (% by DOP test method)	99.97
Pressure drop (clean) (in. H_2O)	1.0
Pressure drop (dirty) (in. H_2O)	2.0
5. Charcoal Adsorber Bed	
Type	Gasketless
Quantity of Media (lb)	1260 per train
Media	Impregnated Charcoal
Efficiency (%)	99.8 elemental iodine 99 of methyl iodine
Capacity (scfm)	4000
Depth of Bed (in.)	4

* Post installation tests results indicated all leakage was below 95.

TABLE 9.4-2
CONTROL ROOM HEATING, VENTILATING, AND
AIR CONDITIONING SYSTEM FAILURE ANALYSIS

COMPONENT	MALFUNCTION	COMMENTS
Supply or return fans	Failure of fan	Motor auto-trip and low fan DP actuates alarms. The operator manually start the standby equipement train.
Chiller unit	Failure of chiller unit resulting in loss of cooling capacity	Following loss of chiller unit, air temperature on discharge of a-c unit fan increases and actuates high temperature alarm in control room. Defective unit would be manually shut down; standby air-handling and chiller unit, fans started.
	Failure of cooling water to chiller condenser resulting in loss of cooling capacity	Chiller automatically shuts down and actuates alarm in control room. Standby air-handling and chiller unit, fans are manually started.
Supply air filter unit	High pressure drop due to heavy particulate loading	Pressure differential switch trips causing visual and audible alarm in the main control room. Standby air handling units, fans and chillers manually started.
Standby make-up filter train	Failure resulting in high pressure differential across filter	High pressure differential across filter will actuate alarm in control room. Defective filter train would be manually isolated and standby train brought into service.
	Failure of fan	Motor auto-trip and low fan DP actuates alarms. The operator manually starts the standby equipment train.
Radiation monitor at outside air intake	Failure resulting in loss of radiation monitoring capability, low scale trip	Redundant radiation monitors are provided
HVAC equipment room cooler fan	Failure of fan resulting in loss of cooling capacity	Following loss of cooling fan, temperature in HVAC equipment room increases and actuates high temperature alarm, standby train is manually started
Both HVAC trains and associated chiller units	Station blackout event. Failure of all on site and off site power	Two 100% capacity gas operated fans are provided to exhaust air from MCR

TABLE 9.4-3
FUEL BUILDING HVAC SYSTEM

NAME OF EQUIPMENT	NUMBER, TYPE, QUANTITY AND NOMINAL CAPACITY (PER COMPONENT)
A. Fuel Building HVAC Supply	
1. Type	Built-up
2. Components	
a. Fans	1VF03CA and 1VF03CB
Type	Centrifugal
Quantity	2
Drive	Direct
Capacity (scfm)	22,000
Static pressure (in. H_2O)	5.4
Motor (hp)	30
b. Filter	1VF01F
Type	Disposable cartridge
Quantity	1 Bank
Efficiency (% by NBS dust spot method)	55
Media	Glass Fiber
Capacity (scfm)	22,000
c. Heating Coils	1VF02A
Type	Electric
Quantity	One 4-stage heater with a total of 13 coils
Capacity (kW)	480
d. Cooling Coil	1VF05A
Type	Chilled water
Quantity	Chilled water
Capacity (Btu/hr)	1,342,500
Chilled water (gpm)	191

TABLE 9.4-3
FUEL BUILDING HVAC SYSTEM (Continued)

NAME OF EQUIPMENT	NUMBER, TYPE, QUANTITY AND NOMINAL CAPACITY (PER COMPONENT)
B. Fuel Building HVAC Exhaust Exhaust Fans	1VF04CA/CB
Type	Centrifugal
Quantity	2
Drive	Direct
Capacity (scfm)	24,000
Static pressure (in. H_2O)	7.7
Motor (hp)	60

TABLE 9.4-4
FUEL BUILDING HEATING, VENTILATING, AND
AIR CONDITIONING SYSTEM
FAILURE ANALYSIS

COMPONENT	MALFUNCTION	COMMENTS
Supply or Exhaust Fan	Failure of a fan resulting in loss of air flow	Should an operating fan fail, an alarm is actuated on the local control panel and the main control board.
	Total loss of system air flow to power failure	Pressure control damper utilized between clean and potentially contaminated areas are of backflow type and fail closed. This minimizes the backflow of contaminated air to clean areas in case of a loss of a-c power and subsequent system fan shutdown.
Flow control damper on main supply	Fail closed	Building pressure is detected by a pressure differential transmitter that results in supply fan and subsequent exhaust fan shutdown.
	High building pressure	High fuel building pressure trips supply fan and subsequent exhaust fan shutdown.
Fuel building isolation dampers	Loss of power supply or air supply Fail closed	The closure of these dampers causes low flow which is alarmed on the local control panel. Supply and exhaust fans are shutdown.

TABLE 9.4-5
AUXILIARY BUILDING HVAC SYSTEM

NAME OF EQUIPMENT	NUMBER, TYPE, QUANTITY AND VENDOR RATED CAPACITY (PER COMPONENT)
A. Auxiliary Building HVAC Supply	
1. Type	Built-up
2. Components	
a. Fans	0VA04CA and 0VA04CB
Type	Vaneaxial
Quantity	2
Drive	Direct
Capacity (scfm) (for blade setting of 17)	34,600
Total pressure (in. H_2O)	6.0
Motor (hp)	50
b. Filter	0VA01F
Type	Disposable cartridge
Quantity	1 Bank
Efficiency (% by NBS dust spot method)	55
Capacity (scfm)	34,600
Media	Glass Fiber
c. Heating Coils	0VA02A
Type	Electric
Quantity	One heater bank
Capacity (kW)	740
d. Cooling Coil	0VA03A
Type	Chilled water
Quantity	1
Capacity (Btu/hr)	2,102,000
Chilled water (gpm)	267

TABLE 9.4-5
AUXILIARY BUILDING HVAC SYSTEM (Continued)

NAME OF EQUIPMENT	NUMBER, TYPE, QUANTITY AND VENDOR RATED CAPACITY (PER COMPONENT)
B. Auxiliary Building Ventilation Exhaust Fans	0VA05CA and 0VA05CB
Type	Vaneaxial
Quantity	2
Drive	Direct
Capacity (scfm) (for blade setting of 25)	22,200
Total pressure (in. H_2O)	6.5
Motor (hp)	50

TABLE 9.4-6
AUXILIARY BUILDING HEATING, VENTILATING, AND AIR CONDITIONING SYSTEM FAILURE ANALYSIS

COMPONENT	MALFUNCTION	COMMENTS
Supply or exhaust fans	Failure of a fan resulting in loss of air flow	Should an operating fan fail, an alarm is actuated on the local control panel. A redundant fan will be started automatically.
	Total loss of system air flow due to power failure	Pressure control dampers utilized between clean and potentially contaminated areas are of backflow type and fail closed. This minimizes the backflow of contaminated air to clean areas in case of a loss of a-c power and subsequent system fan shutdown.
Pressure control damper on main exhaust	Fail closed	High differential pressure, with respect to outside air, within the Control, Auxiliary, or Diesel Generator Buildings will trip the supply fan, resulting in a low building to outside air differential pressure, which will trip the main exhaust fans.

TABLE 9.4-7
TURBINE BUILDING VENTILATION SYSTEM

NAME OF EQUIPMENT	NUMBER, TYPE, QUANTITY AND VENDOR RATED CAPACITY (PER COMPONENT)
A. Turbine Building Ventilation Supply System	
1. Type	Built-up
2. Components	
a. Fans	1VT03CA 1VT03CB
Type	Vaneaxial
Quantity	2
Drive	Direct
Capacity (cfm @ .074 lbs/ft^3 & blade setting of 35)	44,443
Total pressure (in. H_2O)	7.75
Motor (hp)	75
b. Filter	1VT04F
Type	Disposable cartridge
Quantity	1 Bank
Efficiency (% by ASHRAE Test Standard 52-68)	45 to 55
Capacity (scfm)	43,550
Media	Glass fiber
c. Heating Coil	1VT01A
Type	Electric
Quantity	One heater bank
Capacity (kW)	930
Air quantity (scfm)	43,350
d. Cooling Coil	1VT02A
Type	Chilled water
Quantity	1 Bank
Capacity (Btu/hr)	2,584,000
Chilled water (gpm)	294

TABLE 9.4-7
TURBINE BUILDING VENTILATION SYSTEM (Continued)

	NAME OF EQUIPMENT	NUMBER, TYPE, QUANTITY AND VENDOR RATED CAPACITY (PER COMPONENT)
B.	Turbine Building Ventilation Exhaust	
1.	Type	Built-up
2.	Fans	1VT06CA 1VT06CB
	Type	Vaneaxial
	Quantity	2
	Drive	Direct
	Capacity (cfm @ .066 lbs/ft^3 & blade setting of 33)	59,205
	Total pressure (in. H_2O)	7.38
	Motor (hp)	100

TABLE 9.4-8
TURBINE BUILDING VENTILATION SYSTEM
FAILURE ANALYSIS

COMPONENT	MALFUNCTION	COMMENTS
Supply or exhaust fan	Failure of a fan resulting in loss of duct pressure	Should an operating fan fail, an alarm will be actuated on the local control panel. The alarm on the local control panel will also actuate an alarm in the main control room. A redundant fan will be started automatically.
	Total loss of system air flow due to power failure	Pressure control dampers employed between clean and potentially contaminated areas are of the backflow type and fail close. This minimizes the backflow of contaminated air to clean areas in the case of a loss of a-c power and subsequent fan system shutdown.
Flow control damper on main supply	Fail closed	Low flow is detected by a pressure switch through a duct mounted air flow element and alarmed on the local control panel. Supply fans will be manually shutdown and an exhaust fan kept operational to maintain building negative pressure.
	Fail open causing possible loss of building pressure control	Low turbine building pressure differential pressure switch causes alarm on the local control panel.

TABLE 9.4-9
DIESEL-GENERATOR FACILITIES
VENTILATION SYSTEM EQUIPMENT PARAMETERS

	NAME OF EQUIPMENT	NUMBER, TYPE, QUANTITY AND NOMINAL CAPACITY
A.	Diesel-Generator Room Supply Air Fans	1VD01CA 1VD01CB
	Type	Vaneaxial
	Quantity	2
	Drive	Direct
	Capacity (scfm)	80,020
	Total pressure (in. H_2O)	5.0
	Diesel-Generator Room Supply Air Fans	1VD01CC
	Type	Vaneaxial
	Quantity	1
	Drive	Direct
	Capacity (scfm)	48,520
	Total pressure (in. H_2O)	5.0
B.	Diesel Oil Room Exhaust Fans	1VD02CA 1VD02CB 1VD02CC
	Type	Centrifugal
	Quantity	3
	Drive	Direct
	Capacity (scfm)	3,020
	Static pressure (in. H_2O)	3.7
C.	Diesel-Generator Room Makeup Supply Air Fans	1VD03CA 1VD03CB
	Type	Centrifugal
	Quantity	2
	Drive	Direct
	Capacity (scfm)	4,530
	Static pressure (in. H_2O)	3.8

TABLE 9.4-9
DIESEL-GENERATOR FACILITIES
VENTILATION SYSTEM EQUIPMENT PARAMETERS (Continued)

	NAME OF EQUIPMENT	NUMBER, TYPE, QUANTITY AND NOMINAL CAPACITY
D.	Diesel-Generator Makeup Supply Air Filter	1VD26F
	Type	One filter bank, with 6 filter elements (3 wide by 2 high)
	Quantity	1
	Capacity (scfm)	9,060
	Efficiency (% based on ASHRAE Test Standard 52-68)	45 to 55
	Media	Glass fiber
E.	Diesel-Generator Makeup Supply Cooling Coils	1VD05A
	Type	Chilled Water
	Quantity	1
	Cooling capacity (Btu/hr)	550,000
	Water quantity (gpm)	70
F.	Diesel-Generator Makeup Supply Heating Coils	1VD04A
	Type	Electric
	Quantity	One 4-stage heater with a total of 7 coils
	Capacity (kW)	220
	Air quantity (cfm)	9,060

TABLE 9.4-10
DIESEL-GENERATOR FACILITIES VENTILATION SYSTEM
FAILURE ANALYSIS

COMPONENT	MALFUNCTION	COMMENTS
Diesel-Generator Room Ventilation	Loss of air flow or fan motor trip	An air flow switch sensing low differential pressure across the fan actuates an alarm on the main control room panel after a time delay of 30 seconds. A fan motor trip actuates an alarm on the main control room panel instantaneously.
Diesel Oil Room Exhaust Fans	Loss of air flow or fan motor trip	An air flow switch sensing low differential pressure across the fan actuates an alarm on the main control room panel (after a time delay of 30 seconds). A fan motor trip actuates an alarm on the main control room panel instantaneously.
Diesel-Generator Room Makeup Supply fans	Loss of air flow or fan motor trip	An air flow switch sensing low differential pressure across the fan actuates an alarm on the main control room panel after a time delay of 30 seconds. A fan motor trip actuates an alarm on the main control room panel instantaneously.

TABLE 9.4-11
SWITCHGEAR HEAT REMOVAL SYSTEM

NAME OF EQUIPMENT	NUMBER, TYPE, QUANTITY, AND VENDOR RATED CAPACITY (PER COMPONENT)		
A. Standby Switchgear Heat Removal Coil Cabinet/Condensing Unit	1VX02SA/1VX06CA 1VX02SB/1VX06CB 1VX02SC/1VX06CC		
1. Type	Split		
2. Quantity	3		
3. Components for each switchgear room			
a. Supply Air Fans	1VX03CA	1VX03CB	1VX03CC
Type	Centrifugal	Centrifugal	Centrifugal
Quantity	1	1	1
Drive	Direct	Direct	Direct
Capacity (Switchgear Division) (cfm @ .074 lbs/ft^3 density)	1-24,324	2-24,324	3-5,068
Static pressure (Switchgear Division) (in. H_2O)	1-5.32	2-5.32	3-3.29
Motor (Switchgear Division) (hp)	1-40	2-40	3-5
b. Filters	1VX09FA	1VX09FB	1VX09FC
Type	Medium efficiency	Medium efficiency	Medium efficiency
Quantity	1	1	1
Efficiency (% by NBS dust spot method)	60	60	60
Capacity (Switchgear Division) (cfm)	1-24000	2-24000	3-5000
Media	Glass fiber	Glass fiber	Glass fiber

TABLE 9.4-11
SWITCHGEAR HEAT REMOVAL SYSTEM (Continued)

NAME OF EQUIPMENT	NUMBER, TYPE, QUANTITY, AND VENDOR RATED CAPACITY (PER COMPONENT)		
c. Condensing Units	1VX06CA	1VX06CB	1VX06CC
Type	Water-cooled	Water cooled	Water-cooled
Quantity	1	1	1
Capacity (Switchgear Division) (tons)	1-50	2-50	3-12
Power (Switchgear Division) (kW) (Design Input Power/Total Maximum Power Input)	1-47.6/61.9	2-47.6/61.9	3-11.9/18.3
d. Cooling Coil	1VX08AA	1VX08AB	1VX08AC
Type	Direct expansion	Direct expansion	Direct expansion
Quantity	1	1	1
Capacity (Switchgear Division (tons)	1-54.5	2-54.5	3-11
B. Switchgear Heat Removal Coil Cabinet	1VX01SA	1VX01SB	1VX01SC
1. Type	Package	Package	Package
2. Quantity	1	1	1
3. Components of each unit			
a. Fans	1VX04CA	1VX04CB	1VX04CC
Type	Centrifugal	Centrifugal	Centrifugal
Quantity	1	1	1
Drive	Direct	Direct	Direct
Capacity (Switchgear Division) (cfm @ .074 lbs/ft^3 density)	1-24,324	2-24,324	3-5,068
Static pressure (Switchgear Division) (in. H_2O)	1-7.0	2-7.0	3-3.55
Motor (Switchgear Division) (hp)	1-40	2-40	3-5

TABLE 9.4-11
SWITCHGEAR HEAT REMOVAL SYSTEM (Continued)

NAME OF EQUIPMENT	NUMBER, TYPE, QUANTITY, AND VENDOR RATED CAPACITY (PER COMPONENT)		
b. Filters	1VX10FA	1VX10FB	1VX10FC
Type	Medium efficiency	Medium efficiency	Medium efficiency
Quantity	1	1	1
Efficiency (% by NBS dust spot method)	60	60	60
Capacity (Switchgear Division) (cfm)	1-24000	2-24000	3-5000
Media	Glass fiber	Glass fiber	Glass fiber
c. Cooling Coil	1VX07AA	1VX07AB	1VX07AC
Type	Chilled water	Chilled water	Chilled water
Quantity	1	1	1
Capacity (Switchgear Division (tons)	1-60	2-60	3-19.5
C. Battery Room Exhaust Fans	1VX05CA	1VX05CB	1VX05CC
Type	Centrifugal	Centrifugal	Centrifugal
Quantity	1	1	1
Drive	Direct	Direct	Direct
Capacity (cfm @ .071 lbs/ft^3 density)	634	634	634
Static pressure (in. H_2O)	1.48	1.48	1.48
Motor (hp)	0.5	0.5	0.5

TABLE 9.4-11
SWITCHGEAR HEAT REMOVAL SYSTEM (Continued)

	NAME OF EQUIPMENT	NUMBER, TYPE, QUANTITY, AND VENDOR RATED CAPACITY (PER COMPONENT)	
D.	Battery Room Exhaust Fans	1VX11CA	1VX11CB
	Type	Centrifugal	Centrifugal
	Quantity	2	2
	Drive	Direct	Direct
	Capacity (cfm @ .071 lbs/ft^3 density)	3,169	3,169
	Static pressure (in. H_2O)	2.39	2.39
	Motor (hp)	3.0	3.0
E.	Switchgear Heat Removal Return Fan	1VX12CA	1VX12CB
	Type	Centrifugal	Centrifugal
	Quantity	1	1
	Drive	Direct	Direct
	Capacity (cfm @ .070 lbs/ft^3 density)	5,500	5,500
	Static pressure (in. H_2O)	3.2	3.2
	Motor (hp)	5.0	5.0

TABLE 9.4-12
SWITCHGEAR HEAT REMOVAL SYSTEM
FAILURE ANALYSIS

COMPONENT	MALFUNCTION	RESULTS
Non-Safety-Related Switchgear Heat Removal Fan	Fan motor trip	A fan motor trip actuates an alarm on the main control board and the standby safety-related fan starts automatically, upon high temperature in the switchgear room.
Safety-Related Switchgear Heat Removal Fan	Fan motor trip	A fan motor trip actuates an alarm on the main control board.
Switchgear Room Area	High temperature in the switchgear room	High temperature is annunciated on the main control board and the safety-related fan starts automatically.
Safety and Non-Safety-Related Switchgear HeatRemoval Fans	Low pressure differential after fan start	Low pressure differential is annunciated either on the main control board (safety-related fans), or on a local panel which then annunciates trouble alarms on the main control board (non-safety-related fans).
Battery Rooms Exhaust Fans	No air flow	No flow, indicated by low fan pressure differential, is annunciated either directly on the main control board, or on local panels which then annunciate trouble alarms on the main control board.
Return Air Fans	No air flow	No flow, indicated by low fan pressure differential, is annunciated on local panels which then annunciate trouble alarms on the main control board.

TABLE 9.4-13
ECCS EQUIPMENT AREA COOLING SYSTEM

NAME OF EQUIPMENT	NUMBER, TYPE, QUANTITY AND NOMINAL CAPACITY		
A. LPCS Pump Room Cubicle			
1. Supply Fan	1VY01C		
Type	Vaneaxial		
Quantity	1		
Drive	Direct		
Capacity (scfm)	13,000		
Total pressure (in. H_2O)	1.6		
Motor (hp)	7.5		
2. Cooling Coil Cabinet	1VY01S		
Each cabinet shall consist of the following:			
Cooling coils	1VY01AA, 1VY01AB		
Type	Shutdown Service Water or Plant Service Water		
Quantity	2		
Cooling Capacity (Btu/hr) of coil cabinet	472,480		
Air quantity (scfm)	13,000		
Water quantity (gpm)	90		
B. RHR Pump Room Cubicles	A	B	C
1. Supply Fan	1VY02C	1VY06C	1VY07C
Type	Vaneaxial	Vaneaxial	Vaneaxial
Quantity	1	1	1
Drive	Direct	Direct	Direct
Capacity (scfm)	12,000	12,000	12,000
Total pressure (in. H_2O)	1.4	1.4	1.4
Motor (hp)	5	5	5

NOTE: The listed capacities are vendor specification values. Refer to the appropriate calculation for actual design requirements.

TABLE 9.4-13
ECCS EQUIPMENT AREA COOLING SYSTEM (Continued)

NAME OF EQUIPMENT	NUMBER, TYPE, QUANTITY AND NOMINAL CAPACITY		
2. Cooling Coil Cabinets	1VY02S	1VY06S	1VY07S
Each cabinet shall consist of the following:			
Cooling coils	1VY02AA 1VY02AB	1VY06AA 1VY06AB	1VY07AA 1VY07AB
Type	Shutdown Service Water or Plant Service Water	Shutdown Service Water or Plant Service Water	Shutdown Service Water or Plant Service Water
Quantity	2	2	2
Cooling capacity (Btu/hr)	375,000	375,000	375,000
Air quantity (scfm)	12,000	12,000	12,000
Water quantity (gpm)	60	60	60
C. RHR Heat Exchanger Rooms	A	B	
1. Supply Fan	1VY03C	1VY05C	
Type	Vaneaxial	Vaneaxial	
Quantity	1	1	
Drive	Direct	Direct	
Capacity (scfm)	12,000	12,000	
Total pressure (in. H_2O)	1.4	1.4	
Motor (hp)	5	5	
2. Cooling Coil Cabinets	1VY03S	1VY05S	
Each cabinet shall consist of the following:			
Cooling coils	1VY03AA 1VY03AB	1VY05AA 1VY05AB	
Type	Shutdown Service Water or Plant Service Water	Shutdown Service Water or Plant Service Water	
Quantity	2	2	
Cooling capacity (Btu/hr)	375,000	375,000	

NOTE: The listed capacities are vendor specification values. Refer to the appropriate calculation for actual design requirements.

TABLE 9.4-13
ECCS EQUIPMENT AREA COOLING SYSTEM (Continued)

NAME OF EQUIPMENT	NUMBER, TYPE, QUANTITY AND NOMINAL CAPACITY	
Air quantity (scfm)	12,000	12,000
Water quantity (gpm)	60	60
D. RCIC Pump Room Cubicle		
1. Supply Fan	1VY04C	
Type	Vaneaxial	
Quantity	1	
Drive	Direct	
Capacity (scfm)	3,000	
Total pressure (in. H_2O)	1.0	
Motor (hp)	2	
2. Cooling Coil Cabinet	1VY04S	
Each cabinet shall consist of the following:		
Cooling coil	1VY04A	
Type	Shutdown Service Water or Plant Service Water	
Quantity	1	
Cooling capacity (Btu/hr)	103,000	
Air quantity (scfm)	3,000	
Water quantity (gpm)	18	
E. HPCS Pump Room Cubicle		
1. Supply Fans	1VY08CA, 1VY08CB	
Type	Vaneaxial	
Quantity	2	
Drive	Direct	
Capacity (cfm)	12,000	
Total pressure (in. H_2O)	1.4	
Motor (hp)	5	

NOTE: The listed capacities are vendor specification values. Refer to the appropriate calculation for actual design requirements.

TABLE 9.4-13
ECCS EQUIPMENT AREA COOLING SYSTEM (Continued)

NAME OF EQUIPMENT	NUMBER, TYPE, QUANTITY AND NOMINAL CAPACITY
2. Cooling Coil Cabinets	1VY08SA, 1VY08SB
Each cabinet shall consist of the following:	
Cooling coils	1VY08AA 1VY08AC 1VY08AB 1VY08AD
Type	Shutdown Service Water or Plant Service Water
Quantity	2
Cooling capacity (Btu/hr)	375,000
Air quantity (scfm)	12,000
Water quantity (gpm)	60
F. MSIV Inboard Room	
1. Supply Fan	1VY09C
Type	Vaneaxial
Quantity	1
Drive	Direct
Capacity (scfm)	3,000
Total Pressure (in. H_2O)	.65
Motor (hp)	.75
2. Cooling Coil	1VY09S
Each cabinet shall consist of the following:	
Cooling Coils	1VY09A
Type	Shutdown Service Water or Plant Service Water
Quantity	1
Cooling Capacity (Btu/hr) of Coil Cabinet	110,000
Air Quantity (scfm)	3,000
Water Quantity (gpm)	60

NOTE: The listed capacities are vendor specification values. Refer to the appropriate calculation for actual design requirements.

TABLE 9.4-13
ECCS EQUIPMENT AREA COOLING SYSTEM (Continued)

NAME OF EQUIPMENT	NUMBER, TYPE, QUANTITY AND NOMINAL CAPACITY
G. MSIV Outboard Room	
1. Supply Fan	1VY10C
Type	Centrifugal
Quantity	1
Drive	Direct
Capacity (scfm)	810
Total Pressure (in. H_2O)	.80
Motor (hp)	.5
2. Cooling Coil Cabinet	1VY10S
Each cabinet shall consist of the following:	
Cooling Coils	1VY10A
Type	Shutdown Service Water or Plant Service Water
Quantity	1
Cooling Coil (Btu/hr) of Coil Cabinet	30,000
Air Quantity (cfm)	810
Water Quantity (gpm)	60

NOTE: The listed capacities are vendor specification values. Refer to the appropriate calculation for actual design requirements.

TABLE 9.4-14
ECCS EQUIPMENT AREA COOLING SYSTEM
FAILURE ANALYSIS

COMPONENTS	MALFUNCTION	RESULTS
ECCS Cubicle Cooling Fan	Fan motor trip	A fan motor trip actuates an alarm on the main control panel
	Fan failure	With the exception of the MSIV and HPCS cubicle fans, low fan differential pressure actuates an alarm on the main control panel.
ECCS Cubicle Cooling Coil	Cooling water valve does not open	A high temperature switch actuates an alarm on the main control panel

TABLE 9.4-15
SHUTDOWN SERVICE WATER PUMP ROOM
COOLING SYSTEM

NAME OF EQUIPMENT	NUMBER, TYPE, QUANTITY AND NOMINAL CAPACITY	
A. SSW Pump Rooms	A	B
1. Supply Fan	1VH01CA	1VH01CB
Type	Vaneaxial	Vaneaxial
Quantity	1	1
Drive	Direct	Direct
Capacity (scfm)	30,000	30,000
Total pressure (in. H_2O)	2.0	2.0
Motor (hp)	15	15
2. Cooling Coil Cabinet	1VH07SA	1VH07SB
Each cabinet shall consist of the following:		
Cooling coils	1VH01AA 1VH01AB	1VH02AA 1VH02AB
Type	Shutdown Service water	Shutdown Service water
Quantity	2 each	2 each
Cooling capacity (Btu/hr)	388,800	388,800
Air quantity (scfm)	30,000	30,000
Water quantity (gpm)	82	82
B. SSW Pump Room C		
Supply Fan	1VH01CC	
Type	Vaneaxial	
Quantity	1	
Drive	Direct	
Capacity (scfm)	6,000	
Total pressure (in. H_2O)	1.5	
Motor (hp)	3	

NOTE: The listed capacities are vendor specification values. Refer to the appropriate calculation for actual design requirements.

TABLE 9.4-15
SHUTDOWN SERVICE WATER PUMP ROOM
COOLING SYSTEM (Continued)

NAME OF EQUIPMENT	NUMBER, TYPE, QUANTITY AND NOMINAL CAPACITY
2. Cooling Coil Cabinet	1VH07SC
Each cabinet shall consist of the following:	
Cooling coil	1VH03A
Type	Shutdown Service water
Quantity	1
Cooling capacity (Btu/hr)	77,760
Air quantity (scfm)	6,000
Water quantity (gpm)	16

NOTE: The listed capacities are vendor specification values. Refer to the appropriate calculation for actual design requirements.

TABLE 9.4-16
SHUTDOWN SERVICE WATER PUMP ROOM
COOLING SYSTEM FAILURE ANALYSIS

COMPONENT	MALFUNCTION	RESULTS
SSW Cubicle Cooling Fan	Fan motor trip	A fan motor trip actuates an alarm on the main control panel.
SSW Cubicle Cooling Coil	Cooling water valve does not open	A high temperature switch actuates an alarm on the main control panel.

TABLE 9.4-17
CGCS EQUIPMENT CUBICLE COOLING SYSTEM

NAME OF EQUIPMENT	NUMBER, TYPE, QUANTITY AND VENDOR RATED CAPACITY
A. Supply Fans	1VR08C, 1VR11C
Type	Centrifugal
Quantity	2
Drive	Direct
Capacity (acfm)	2,000
Static Pressure (inches water)	5.2
Motor (hp)	3.0
B. Coil Cabinets	1VR09S, 1VR12S
1. Type	Built-up
2. Components (Cooling Coil)	1VR10A, 1VR13A
Type	Shutdown Service Water
Quantity	1
Cooling Capacity (Btu/hr)	100,000
Water Quantity (gpm)	36
Air Flow (scfm)	3,400

TABLE 9.4-18
CGCS EQUIPMENT CUBICLE COOLING SYSTEM
FAILURE ANALYSIS

COMPONENT	MALFUNCTION	RESULTS
CGCS Cubicle Fan	Fan motor trip	A fan motor trip actuates an alarm on the main control panel.

TABLE 9.4-19
CONTAINMENT BUILDING VENTILATION SYSTEM

NAME OF EQUIPMENT	NUMBER, TYPE, QUANTITY AND VENDOR RATED CAPACITY
A. Containment Building Ventilation Supply	
1. Type	Built-up
2. Components	
a. Fans	1VR03CA and 1VR03CB
Type	Vaneaxial
Quantity	2
Drive	Direct
Capacity (cfm @ 0.74 lb/ft^3 density, for blade setting of 15)	30,405
Total pressure (in. H_2O)	6.58
Motor (hp)	50
b. Cooling Coil	1VR02A
Type	Chilled water
Quantity	1
Cooling capacity (Btu/hr)	1,791,200
Air quantity (cfm)	30,000
Water Quantity (gpm)	275
c. Heating Coil	1VR01A
Type	Electric
Quantity	1 bank
Capacity (kW)	780
Air quantity (cfm)	30,000
d. Filter	1VR05F
Type	Disposable cartridge
Quantity	1 Bank
Media	Glass Fiber
Efficiency (% by ASHRAE Test Standard 52-68)	50
Capacity (cfm)	30,000

TABLE 9.4-19
CONTAINMENT BUILDING VENTILATION SYSTEM (Continued)

NAME OF EQUIPMENT	NUMBER, TYPE, QUANTITY AND VENDOR RATED CAPACITY
B. Containment Building Ventilation Exhaust Fans	1VR04CA, 1VR04CB
Type	Vaneaxial
Quantity	2
Drive	Direct
Capacity (cfm @ .066 lb/ft^3, for blade setting of 18)	34,090
Total pressure (inches water)	8.9
Motor (hp)	75

TABLE 9.4-19A
CONTINUOUS CONTAINMENT PURGE SYSTEM

NAME OF EQUIPMENT	NUMBER, TYPE, QUANTITY AND VENDOR RATED CAPACITY
A. Continuous Containment Purge Supply Train	
1. Type	Built-up
2. Components	
a. Blowers	1VR06CA, 1VR06CB
Type	High Pressure, Centrifugal
Quantity	2
Drive	Direct
Capacity (cfm @ .071lb/ft^3 density)	8,450
Static pressure (in. H_2O)	37
Motor (hp)	100
b. Cooling Coils	
Primary Cooling Coil	1VR06A
Type	Chilled water
Quantity	1
Cooling Capacity (Btu/hr)	571,140
Air quantity (scfm)	8,000
Water quantity (gpm)	80
Secondary cooling coil	1VR07A
Type	Chilled water
Quantity	1
Cooling capacity (Btu/hr)	359,000
Air quantity (scfm)	8,000
Water quantity (gpm)	44
c. Heating Coil	1VR05A
Type	Electric
Quantity	1 Bank
Capacity (kW)	133
Air quantity (scfm)	8,000

TABLE 9.4-19A
CONTINUOUS CONTAINMENT PURGE SYSTEM (Continued)

NAME OF EQUIPMENT	NUMBER, TYPE, QUANTITY AND VENDOR RATED CAPACITY
d. Filter	1VR06F
Type	Disposable cartridge
Quantity	1 Bank
Media	Glass Fiber
Efficiency (% by ASHRAE Test Standard 52-68)	50
Capacity (scfm)	8,000
B. Continuous Containment Purge Exhaust Blowers	1VR07CA, 1VR07CB
Type	High Pressure, Centrifugal
Quantity	2
Drive	Direct
Capacity (cfm @ .068 lb/ft^3 density)	8,860
Static pressure (in. H_2O)	44.5
Motor (hp)	125

TABLE 9.4-20
CONTAINMENT BUILDING VENTILATION SYSTEM
FAILURE ANALYSIS

COMPONENT	MALFUNCTION	COMMENTS
Supply or Exhaust	Failure of a fan resulting in low air flow	Should an operating fan fail, an alarm will be actuated in the main control room. A redundant fan will be started automatically.
	Total loss of system air flow due to power failure	Pressure control dampers employed between clean and potentially contaminated areas are of the backflow type which fail closed. This minimizes the backflow of contaminated air to clean areas in the case of loss of a-c power and subsequent fan system shutdown.
Flow Control Damper on Main Supply	Fail closed	Low supply air flow is detected by a pressure switch fed from a duct mounted air flow element. An alarm is received in the main control room. Supply fans trip on low air flow, and exhaust fans trip due to no running supply fan.
	Fail open causing possible loss of building pressure control	High or low containment building pressure causes an alarm in the main control room.
Containment Building Isolation Valve	Loss of power supply or air supply. Fail close	The closure of these dampers will cause low flow to be detected by a pressure switch fed from a duct mounted air flow element and alarmed in the main control room. Supply and exhaust fans will be shutdown.

TABLE 9.4-20A
CONTINUOUS CONTAINMENT PURGE SYSTEM
FAILURE ANALYSIS

COMPONENT	MALFUNCTION	COMMENTS
Supply or Exhaust Blower	Failure of blower resulting in loss of air flow	Should an operating blower fail, an alarm will be actuated in the main control room. A redundant blower will be started automatically.
	Total Loss of system air flow due to power failure	Pressure control dampers employed between clean and potentially contaminated areas are of the backflow type which fail closed. This minimizes the backflow of contaminated air to clean areas in the case of loss of a-c power and subsequent blower system shutdown.
Flow Control Damper on Main Supply	Fail closed	Low supply air flow, detected by a pressure switch fed from a pipe mounted air flow element, is alarmed in the main control room. The supply blowers trip on low flow, and the exhaust blowers trip due to no running supply blower.
	Fail open causing possible loss of building pressure control	High containment building pressure switch causes an alarm in the main control room.
Continuous Containment Purge System Containment Isolation Valve	Loss of power supply or air supply. Fail closed	The closure of an isolation valve will cause low flow to be detected by a pressure switch fed from a pipe mounted air flow element and alarmed in the main control room. Supply and exhaust fan will be shutdown.

TABLE 9.4-21
DRYWELL COOLING HVAC SYSTEM EQUIPMENT PARAMETERS

NAME OF EQUIPMENT	NUMBER, TYPE, QUANTITY, AND VENDOR RATED CAPACITY			
A. Drywell Cooling Supply Air Fans	1VP01CA	1VP01CB	1VP01CC	1VP01CD
Type	Vaneaxial	Vaneaxial	Vaneaxial	Vaneaxial
Drive	Direct	Direct	Direct	Direct
Capacity (cfm)	25,000	25,000	36,486	36,486
Total Pressure (in H_2O)	2.74	3.8	4.05	4.05
Air density for rated conditions (lb/ft^3)	.069	.069	.074	.074
Blade setting for rated condition	14	19	39	39
Fan motor (hp)	20	25	30	30
B. Drywell Cooling Coil Cabinets	1VP02SA 1VP02SB			
Type	Drywell chilled water			
Quantity	2			
Cooling capacity (Btu/hr)	993,600			
Air quantity (scfm)	23,000			
Chilled water flow (gpm)	200			
Drywell Cooling Coil Cabinets	1VP02SC 1VP02SD			
Type	Drywell chilled water			
Quantity	2			
Cooling capacity (Btu/hr)	4,300,000			
Air quantity (scfm)	36,000			
Chilled water flow (gpm)	830			
C. Refrigeration Units	1VP04CA 1VP04CB			
Type of unit	Water Chiller			
Quantity	2			
Type of compressor	Centrifugal hermetic			
Cooling capacity (Btu/hr)	6,000,000			

TABLE 9.4-21
DRYWELL COOLING HVAC SYSTEM EQUIPMENT PARAMETERS (Continued)

NAME OF EQUIPMENT	NUMBER, TYPE, QUANTITY, AND VENDOR RATED CAPACITY			
D. Supplemental Drywell Cooling Supply Air Fans	1VP01CE	1VP01CF	1VP01CG	1VP01CH
Type	Vaneaxial	Vaneaxial	Vaneaxial	Vaneaxial
Drive	Direct	Direct	Direct	Direct
Capacity (cfm)	6,918	6,918	10,236	10,236
Total Pressure (in H_2O)	2.33	2.33	2.79	2.79
Air density for rated conditions (lb/ft^3)	.074	.074	.074	.074
Blade setting for rated condition	27	27	50	50
Fan motor (hp)	7.5	7.5	7.5	7.5
E. Supplemental Drywell Cooling Coil Cabinets	1VP02SE 1VP02SF			
Type	Drywell chilled water			
Quantity	2			
Cooling capacity* (Btu/hr)	693,517			
Air quantity (acfm)	7,565			
Chilled water flow (gpm)	80			
Supplemental Drywell Cooling Coil Cabinets	1VP02SG 1VP02SH			
Type	Plant chilled water			
Quantity	2			
Cooling capacity* (Btu/hr)	876,200			
Air quantity (acfm)	11,480			
Chilled water flow (gpm)	85.7			

* Corresponding to entering air dry/wet bulb of 130°F/85°F.

TABLE 9.4-22
DRYWELL COOLING HVAC SYSTEM
FAILURE ANALYSIS

COMPONENT	MALFUNCTION	RESULTS
Supply Air Fans	Fan motor automatic trip	Fan motors automatic trips are alarmed on a main control room panel.
Refrigeration	Loss of refrigeration unit	Operator starts the standby refrigeration unit.

TABLE 9.4-23
DRYWELL PURGE SYSTEM

NAME OF EQUIPMENT	NUMBER, TYPE, QUANTITY AND VENDOR RATED CAPACITY
A. Drywell Purge Filter Trains	0VQ01SA[1], 0VQ01SB[1], 0VQ01SC
1. Prefilter	0VQ04FA[1], 0VQ04FB[1], 0VQ04FC
Type	Disposable cartridge units
Quantity	1 Bank per train
Capacity (scfm)	15,000[2]
Efficiency (% based on ASHRAE Test Standard 52-68)	85
Media	Glass fibers
2. Upstream HEPA Filters	0VQ06FA[1], 0VQ06FB[1], 0VQ06FC
Type	High efficiency
Quantity	1 Bank per train
Capacity (scfm)	15,000[2]
Media	Glass Fiber
Efficiency (% minimum 0.3 micron dioctyl phthalate smoke)	99.97
3. Heating Coil	0VQ05AA[1], 0VQ05AB[1], 0VQ05AC
Type	Electric
Quantity	1 Heater per train
Air quantity (scfm)	15,000[2]
Capacity (kW)	75
4. Moisture Separator	0VQ09SA[1], 0VQ09SB[1], 0VQ09SC
Type	Impingement
Quantity	1 Separator per train
Capacity (scfm)	15,000[2]
5. Charcoal Adsorber Bed	0VQ07FA[1], 0VQ07FB[1], 0VQ07FC
Type	Gasketless
Quantity	3 (1 per train)
Media	Impregnated charcoal
Depth of Bed (in)	4
Decontainmination efficiency (%)	90/70[3]
Capacity (scfm)	15,000[2]

TABLE 9.4-23
DRYWELL PURGE SYSTEM (Continued)

	NAME OF EQUIPMENT	NUMBER, TYPE, QUANTITY AND VENDOR RATED CAPACITY
6.	Preheating Coil	0VQ10AA[1], 0VQ10AB[1], 0VQ10AC
	Type	Electric
	Quantity	1 Heater per train
	Capacity (kW)	2
	Air Quantity (scfm)	300
7.	Downstream HEPA Filters	0VQ08FA, 0VQ08FB, 0VQ08FC
	Type	High Efficiency
	Quantity	1 Bank per train
	Capacity (scfm)	15 000[2]
	Media	Glass fiber
	Efficiency (% minimum 0.3 micron dioctyl phthalate smoke)	99.97
8.	Exhaust Fans	0VQ02CA[1], 0VQ02CB[1], 0VQ02CC
	Type	Centrifugal
	Quantity	1 Fan per train
	Drive	Direct
	Capacity (scfm)	15,000
	Static pressure (in. H_2O)	16.5
	Motor (hp)	100

TABLE 9.4-23
DRYWELL PURGE SYSTEM (Continued)

	NAME OF EQUIPMENT	NUMBER, TYPE, QUANTITY AND VENDOR RATED CAPACITY
9.	Low Flow Exhaust Fans	0VQ03CA, 0VQ03CB, 0VQ03CC
	Type	Centrifugal
	Quantity	1 Fan per train
	Drive	Direct
	Capacity (scfm)	300
	Static pressure (in. H_2O)	4.55
	Motor (hp)	1.5

NOTE

1. Drywell purge filter use during continuous containment purge. Only two filter packages, 0VQ01SA and B (one standby), are used for continuous containment purge. The flow rate during continuous containment puge is 8,000 scfm.

2. The filter train original design flowrate of 15,000 cfm has been raised to 16,270 cfm maximum (one filter train operating and two standby).

3. Efficiency of 90% assumed for flows below 15,333 cfm, and efficiency of 70% assumed for flows greater than 15,333 cfm, due to reduction of residence time within the charcoal beds.

TABLE 9.4-24
DRYWELL PURGE SYSTEM
FAILURE ANALYSIS

COMPONENT	MALFUNCTION	COMMENTS
Exhaust Fan	Automatic trip of fan motor, or failure of fan resulting in loss of flow	Should an operating fan fail, an alarm will be actuated on the main control panel. A redundant purge unit will be started.
	Total loss of main system air flow due to power failure	Even though the main system is lost, the system still has the capability to act as a backup to the redundant containment combustible gas control system since the low flow exhaust fans are connected to the diesel generators.
Package Filter Unit Isolation Dampers	Fail close	Low flow is detected by a flow switch on a duct mounted air flow element and alarmed in the main control room. A redundant purge unit will be started.
Containment Building Isolation valve	Loss of power supply or air supply. Fail close.	The closure of this valve will cause low flow to be detected by a flow switch on a duct mounted air flow element and alarmed on the main control panel. The exhaust fans will be shut down.

TABLE 9.4-25
OFF-GAS VAULT REFRIGERATION SYSTEM

NAME OF EQUIPMENT	NUMBER, TYPE, QUANTITY AND VENDOR RATED CAPACITY (PER COMPONENT)
A. Refrigeration Skids	1VO01SA, 1VO01SB
1. Type	Built-up
2. Quantity	2
3. Capacity (Btu/hr)	240,000 (each skid)
4. Components	
a. Compressors	1VO01CA, 1VO02CA, 1VO01CB, 1VO02CB
Type	Open reciprocating
Quantity	4
Power (hp)	60 (each compressor)
Drive	Direct
b. Compressor Oil Coolers	1V008AA, 1V009AA, 1V008AB, 1V009AB
Type	Water-cooled
Quantity	4
c. Condenser	1V002AA, 1V002AB
Type	Water-cooled
Quantity	2
B. Air Handling Unit Skids	1VO02SA, 1VO02SB
1. Type	Built-up
2. Quantity	2
3. Components	
a. Supply Air Fans	1VO05CA, 1VO05CB
Type	Centrifugal
Quantity	2
Air flow (scfm)	15,000
External static pressure (in. H_2O)	3.0
Drive	Belt
Motor (hp)	15
b. Cooling Coil	1VO06AA, 1VO12AA, 1VO06AB, 1VO12AB

TABLE 9.4-25
OFF-GAS VAULT REFRIGERATION SYSTEM (Continued)

NAME OF EQUIPMENT	NUMBER, TYPE, QUANTITY AND VENDOR RATED CAPACITY (PER COMPONENT)
Type	Direct Expansion
Quantity	4
Sensible heat capacity (Btu/hr)	102,000 (per coil)
Air Flow (cfm)	7,500 (per coil)
c. Electric Defrost Heater	1VO10AA, 1VO10AB
Type	Electric
Quantity	2
Capacity (kW)	45
d. Drain Pan Electric Heater	1VO11AA, 1VO1AB
Type	Electric
Quantity	2
Capacity (kW)	9
C. Heating Circulating Fan	1VO01C
Type	Centrifugal
Quantity	1
Air flow (cfm @ .061 .b/ft^3 density)	6,148
External static pressure (in. H_2O)	2.95
Drive	Direct
Motor (hp)	7.5
D. Electric Blast Coil	1VO03A
Type	Electric
Quantity	1 Heater
Capacity (kW)	100

TABLE 9.4-26
OFF-GAS VAULT REFRIGERATION SYSTEM
FAILURE ANALYSIS

COMPONENT	MALFUNCTION	RESULTS
Supply Air Fan	Fan motor trip	Fan motor auto trip is annunciated on the local control panel and gives a permissive signal to allow the standby fan to be manually started.
Charcoal Vault Temperature	High temperature	High charcoal vault temperature is annunciated on the main control board.
Charcoal Vault Temperature	Low temperature	Low charcoal vault temperature is annunciated on the main control board.
Refrigeration Compressor	Compressor motor trip	Compressor motor trip is annunciated on the local control panel.
Heating Circulating Fan	Fan motor trip	Fan motor auto trip is annunciated on the local control panel.
Drain Pan Electric Heater	Heater trip	Heater trip is annunciated on the local control panel.

TABLE 9.4-27
MACHINE SHOP AREA VENTILATION SYSTEM

NAME OF EQUIPMENT	NUMBER, TYPE, QUANTITY AND VENDOR RATED CAPACITY
A. Machine Shop Ventilation Supply	
1. Fans	0VJ01CA 0VJ01CB
Type	Vaneaxial
Quantity	2
Drive	Direct
Capacity (cfm at .074 lb/ft^3 density, blade setting of 31)	14,189
Total pressure (in. H_2O)	5.82
Motor (hp)	20
2. Cooling Coil	0VJ09A
Type	Chilled water
Quantity	1
Cooling capacity (Btu/hr)	1,673,700
Water quantity (gpm)	205
3. Heating Coil	0VJ08A
Type	Electric
Quantity	1 Heater
Capacity (kW)	608
Air quantity (scfm)	28,000
4. Filter	0VJ10F
Type	Medium efficiency
Quantity	1 Bank
Capacity (scfm)	28,000
Efficiency (% based on ASHRAE Test Standard 52-68)	55
Media	Glass fiber

TABLE 9.4-27
MACHINE SHOP AREA VENTILATION SYSTEM (Continued)

NAME OF EQUIPMENT	NUMBER, TYPE, QUANTITY AND VENDOR RATED CAPACITY
B. Machine Shop Ventilation Exhaust	
1. Fans	0VJ02CA 0VJ02CB
Quantity	2
Drive	Direct
Capacity (cfm at .070 lb/ft^3 density)	15,080
Static pressure (in. H_2O)	9.75
Motor (hp)	40

TABLE 9.4-27
MACHINE SHOP AREA VENTILATION SYSTEM (Continued)

NAME OF EQUIPMENT	NUMBER, TYPE, QUANTITY, AND VENDOR RATED CAPACITY		
2. Exhaust Filter Trains	0VJ03S	0VJ04S	0VJ06S
Type	Machine Shop Exhaust	Decon. Room Exhaust	Weld Shop Exhaust
Capacity (scfm)	5000	8000	7500
a. Dust Collector	Yes	N/A	N/A
b. Moisture Separator	N/A	Yes	N/A
c. Prefilter			
Quantity	1 Bank	1 Bank	1 Bank
Media	Glass Fiber	Glass Fiber	Glass Fiber
Efficiency (based on ASHRAE Test Standard 52-68)	85	85	85
d. HEPA Filter			
Quantity	1 Bank	1 Bank	1 Bank
Media	Glass Fiber	Glass Fiber	Glass Fiber
Efficiency (% minimum 0.3 micron dioctyl phthalate)	99.97	99.97	99.97

TABLE 9.4-28
MACHINE SHOP VENTILATION SYSTEM
FAILURE ANALYSIS

COMPONENT	MALFUNCTION	COMMENTS
Supply or exhaust fan	Failure of a fan resulting in loss of duct pressure	Should an operating fan fail, an alarm will be actuated on the local control panel. The alarm on the local control panel will also activate an alarm in the main control room.
	Total loss of system air flow due to power failure	Pressure control dampers employed between clean and potentially contaminated areas are of the backflow type and fail close. This minimizes the backflow of contaminated air to clean areas in the case of a loss of power and subsequent fan system shutdown.

TABLE 9.4-29
CIRCULATING WATER SCREEN HOUSE VENTILATION SYSTEM

	NAME OF EQUIPMENT	NUMBER, TYPE, QUANTITY AND VENDOR RATED CAPACITY
A.	Circulating Water Screen House Supply Fans	1VH02CA 1VH02CB
	Type	Vaneaxial
	Quantity	2
	Drive	Direct
	Capacity (cfm at .068 lb/ft^3 density, blade setting of 16)	17,647
	Total pressure (in. H_2O)	2.76
	Motor (hp)	15
B.	Circulating Water Screen House Chlorinator Room Exhaust Fans	0VH06CA 0VH06CB
	Type	Centrifugal
	Quantity	2
	Drive	Direct
	Capacity (scfm)	1,500
	Static pressure (in. H_2O)	0.5
	Motor (hp)	0.33
C.	Circulating Water Screen House Fire Pump Room Exhaust Fans	1VH03CA 1VH03CB
	Type	Centrifugal
	Quantity	2
	Drive	Belt
	Capacity (scfm)	6,000
	Static pressure (in. H_2O)	0.375
	Motor (hp)	0.75
D.	Circulating Water Screen House Exhaust Fans	1VH04CA 1VH04CB
	Type	Propeller
	Quantity	2
	Drive	Direct
	Capacity (scfm)	25,000
	Static pressure (in. H_2O)	0.375
	Motor (hp)	5.0

TABLE 9.4-29
CIRCULATING WATER SCREEN HOUSE VENTILATION SYSTEM (Continued)

	NAME OF EQUIPMENT	NUMBER, TYPE, QUANTITY AND VENDOR RATED CAPACITY
E.	Circulating Water Screen House Fire Pump Room Minimum Flow Exhaust Fan	1VH08C
	Type	Centrifugal
	Quantity	1
	Drive	Direct
	Capacity (scfm)	250
	Static pressure (in. H_2O)	0.375
	Motor (hp)	0.25

TABLE 9.4-30
CIRCULATING WATER SCREEN HOUSE VENTILATION SYSTEM
FAILURE ANALYSIS

COMPONENT	MALFUNCTION	COMMENTS
Supply fan	Failure of a fan resulting in loss of duct pressure	Should an operating fan fail, fan trip is alarmed on the local control panel.
Flow control damper on main supply	Fail closed	Failed closed damper causes a fan trip and is alarmed on the local control panel.

TABLE 9.4-31
LABORATORY HVAC SYSTEM

NAME OF EQUIPMENT	NUMBER, TYPE, QUANTITY AND VENDOR RATED CAPACITY
A. Laboratory Supply	0VL12S
1. Type	Dual duct
2. Components	
a. Heating Coil	0VL05A
Type	Electric
Quantity	1 Heater
Capacity (kW)	228
b. Cooling Coil	0VL04A
Type	Chilled water
Quantity	1
Cooling capacity (Btu/hr)	2,244,300
Air quantity (scfm)	28,750
B. Laboratory Supply Fans	0VL01CA 0VL01CB
Type	Centrifugal
Quantity	2
Drive	Direct
Capacity (cfm at .068 lb/ft^3 density)	15,855
Static pressure (in. H_2O)	7.51
C. Laboratory Supply Air Filter	0VL08F
Type	Medium efficiency
Quantity	1 Filter Bank
Capacity (scfm)	28,750
Efficiency (% by ASHRAE Test Standard 52-68)	55
Media	Glass fiber
D. Laboratory Makeup Air Fans	0VL02CA 0VL02CB
Type	Centrifugal
Quantity	2
Drive	Direct

TABLE 9.4-31
LABORATORY HVAC SYSTEM (Continued)

	NAME OF EQUIPMENT	NUMBER, TYPE, QUANTITY AND VENDOR RATED CAPACITY
	Capacity (cfm at .068 lb/ft^3 density)	18,005
	Static pressure (in. H_2O)	6.07
E.	Laboratory Preheat Coil	0VL07A
	Type	Electric
	Quantity	1 Heater
	Capacity (kW)	550
F.	Laboratory Exhaust Fans	0VL03CA 0VL03CB
	Type	Centrifugal
	Quantity	2
	Drive	Direct
	Capacity (cfm @ .069 lb/ft^3 density)	17,880
	Static pressure (in. H_2O)	11.01
G.	Laboratory Auxiliary Air Heating Coil	0VL06A
	Type	Electric
	Quantity	1 Heater
	Capacity (kW)	65
H.	Laboratory Makeup Air Filter	0VL09F
	Type	Medium efficiency
	Quantity	1 Filter Bank
	Capacity (scfm)	32,650
	Efficiency (% by ASHRAE Test Standard 52-68)	55
	Media	Glass fiber
I.	Laundry Exhaust Lint Filter	0VL10F
	Type	Low efficiency
	Quantity	1
	Capacity (scfm)	9,000
	Efficiency (% by ASHRAE Test Standard 52-68)	12
	Media	Glass fiber

TABLE 9.4-31
LABORATORY HVAC SYSTEM (Continued)

NAME OF EQUIPMENT	NUMBER, TYPE, QUANTITY AND VENDOR RATED CAPACITY
J. Laboratory Exhaust Air Filter Packages	0VL11SA 0VL11SB
1. Type	Builtup
2. Components	
a. Prefilter	
Type	Medium efficiency
Quantity	1 Bank, per filter package
Capacity (scfm)	16,450
Efficiency (% by ASHRAE Test Standard 52-68)	85
Media	Glass fiber
b. HEPA filter	
Type	High efficiency
Quantity	1 Bank, per filter package
Capacity (scfm)	16,450
Efficiency (% minimum 0.3 micron and larger)	99.97
Media	Glass fiber
K. Laboratory Humidification Steam Boiler	0VL13B
Type	Electric
Quantity	1
Capacity (lb/hr)	1867
Operating pressure (psig)	10
L. Laboratory Humidifier	0VL14M
Type	Steam
Quantity	1
Capacity (lb/hr)	850
Air Quantity (scfm)	28,750
Steam pressure (psig)	10

TABLE 9.4-31
LABORATORY HVAC SYSTEM (Continued)

NAME OF EQUIPMENT	NUMBER, TYPE, QUANTITY AND VENDOR RATED CAPACITY	
M. Counting Room Coil Cabinet	0VL13SA	0VL13SB
Type	Builtup	Builtup
2. Components		
a. Cooling Coil	0VL13AA	0VL13AB
Type	Chilled water	Direct expansion
Quantity	1	1
Cooling capacity (Btu/hr)	314,000	323,000
Air quantity (scfm)	3,100	3,100
b. Heating Coil	0VL15AA	0VL15AB
Type	Electric	Electric
Quantity	1 Heater	1 Heater
Capacity (kW)	65	65
N. Counting Room Reheat	0VL14A	
Type	Electric	
Quantity	1	
Capacity (kW)	15	
O. Counting Room Supply Air Filter	0VL16FA 0VL16FB	
1. Type	Built-up	
2. Components		
a. Prefilter	0VL23FA,B	
Type	Medium efficiency	
Quantity	2	
Capacity (scfm)	3,100	
Efficiency (% by ASHRAE Test Standard 52-68)	60-65	
Media	Glass fiber	
b. HEPA Filter	0VL24FA,B	
Type	High efficiency	
Quantity	2	
Capacity (scfm)	3,100	

TABLE 9.4-31
LABORATORY HVAC SYSTEM (Continued)

	NAME OF EQUIPMENT	NUMBER, TYPE, QUANTITY AND VENDOR RATED CAPACITY
	Efficiency (% minimum 0.3 micron and larger)	99.97
	Media	Glass fiber
P.	Counting Room Supply Fan	0VL17CA 0VL17CB
	Type	Centrifugal
	Quantity	2
	Drive	Direct
	Capacity (cfm at .071 lb/ft^3 density)	3,275
	Static pressure (in. H_2O)	6.1
Q.	Counting Room Humidifier	0VL19M
	Type	Steam
	Quantity	1
	Capacity (lb/hr)	115
	Air quantity (scfm)	3,100
	Steam pressure (psig)	10
R.	Counting Room Exhaust Fan	0VL18CA 0VL18CB
	Type	Centrifugal
	Quantity	2
	Drive	Direct
	Capacity (cfm at .069 lb/ft^3 density)	2,828
	Static pressure (in. H_2O)	5.9

TABLE 9.4-32
SERVICE BUILDING HVAC SYSTEM

NAME OF EQUIPMENT	NUMBER, TYPE, QUANTITY AND VENDOR RATED CAPACITY
A. Service Building Exterior Zone Air Handling Unit	0VS01S
1. Type	Built-up
2. Components	
a. Filter	0VS01F
Type	Medium Efficiency
Quantity	1 Bank
Media	Glass Fiber
Efficiency (% by ASHRAE 52-68 Test Std)	45-55
Capacity (cfm)	14,590
b. Cooling Coil	0VS05A
Type	Chilled water
Quantity	1
Cooling Capacity (Btu/hr)	570,300
Water Quantity (gpm)	140
Air Flow (scfm)	13,460
c. Heating Coil	0VS02A
Type	Electric
Quantity	1 Heater
Capacity (kW)	140
d. Supply Fan	0VS08C
Type	Centrifugal
Drive	Belt
Quantity	1
Capacity (scfm)	14,590
Static Pressure (inches water)	5.5
Motor (hp)	25
B. Service Building Exterior Zone Return Fan	0VS10C
Type	Vaneaxial
Drive	Direct
Quantity	1

TABLE 9.4-32
SERVICE BUILDING HVAC SYSTEM (Continued)

NAME OF EQUIPMENT	NUMBER, TYPE, QUANTITY AND VENDOR RATED CAPACITY
Capacity (cfm at .072 lb/ft^3 density, blade setting of 43)	15,198
Static Pressure (inches water)	3.01
Motor (hp)	15
C. Service Building Interior Zone 1 Air Handling Unit	0VS03S
1. Type	Built-up
2. Components	
a. Filter	0VS02F
Type	Medium Efficiency
Quantity	1 Bank
Media	Glass Fiber
Efficiency (% by ASHRAE 52-68 Test Std)	45-55
Capacity (cfm)	16,900
b. Cooling Coil	0VS06A
Type	Chilled Water
Quantity	1
Cooling Capacity (Btu/hr)	770,900
Water Quantity (gpm)	170
Air Flow (scfm)	15,600
c. Heating Coil	0VS03A
Type	Electric
Quantity	1 Heater
Capacity (kW)	130
d. Supply Fan	0VS09C
Type	Centrifugal
Drive	Belt
Quantity	1
Capacity (scfm)	16,900
Static Pressure (inches water)	5.5
Motor (hp)	30

TABLE 9.4-32
SERVICE BUILDING HVAC SYSTEM (Continued)

NAME OF EQUIPMENT	NUMBER, TYPE, QUANTITY AND VENDOR RATED CAPACITY
D. Service Building Interior Zone -1 Return Fan	0VS11C
Type	Vaneaxial
Drive	Direct
Quantity	1
Capacity (cfm at .072 lb/ft^3 density, blade setting of 50)	17,604
Static Pressure (inches water)	2.8
Motor (hp)	15
E. Service Building Interior Zone - 2 Air Handling Unit	0VS02S
1. Type	Built-up
2. Components	
a. Filter	0VS02F
Type	Medium Efficiency
Quantity	1 Bank
Media	Glass Fiber
Efficiency (% by ASHRAE 52-68 Test Std)	60
Capacity (cfm)	24,190
b. Cooling Coil	0VS07A
Type	Chilled Water
Quantity	1
Cooling Capacity (Btu/hr)	902,300
Water Quantity (gpm)	200
Air Flow (scfm)	22,640
c. Heating Coil	0VS04A
Type	Electric
Quantity	1 Heater
Capacity (kW)	190
d. Supply Fan	0VS06C
Type	Centrifugal
Drive	Belt
Quantity	1

TABLE 9.4-32
SERVICE BUILDING HVAC SYSTEM (Continued)

NAME OF EQUIPMENT	NUMBER, TYPE, QUANTITY AND VENDOR RATED CAPACITY
Capacity (scfm)	24,560
Static Pressure (inches water)	5.5
Motor (hp)	40
F. Service Building Interior Zone - 2 Return Fan	0VS12C
Type	Vaneaxial
Drive	Direct
Quantity	1
Capacity (cfm at .072 lb/ft^3 density, blade setting of 44)	25,198
Static Pressure (inches water)	2.61
Motor (hp)	20
G. Service Building Locker Room Air Handling Unit	0VS05S
1. Type	Built-up
2. Components	
a. Filter	0VS05F
Type	Medium Efficiency
Quantity	1
Media	Glass Fiber
Efficiency (% by ASHRAE 52-68 Test Std)	45-55
Capacity (cfm)	4,130
b. Cooling Coil	0VS08A
Type	Chilled Water
Quantity	1
Cooling Capacity (Btu/hr)	306,655
Water Quantity (gpm)	62
Air Flow (scfm)	4,130
c. Heating Coil	0VS14A
Type	Electric
Quantity	1 Heater
Capacity (kW)	100

TABLE 9.4-32
SERVICE BUILDING HVAC SYSTEM (Continued)

NAME OF EQUIPMENT	NUMBER, TYPE, QUANTITY AND VENDOR RATED CAPACITY
d. Supply Fan	0VS16C
Type	Centrifugal
Drive	Belt
Quantity	1
Capacity (scfm)	4,130
Static Pressure (inches water)	3.85
Motor (hp)	7.5
H. Service Building Locker Room Exhaust Fan	0VS13C
Type	Centrifugal
Drive	Belt
Quantity	1
Capacity (cfm)	8,680
Static Pressure (inches water)	1
Motor (hp)	3
I. Record Storage Facility HVAC System	0VS28S
1. Type	Draw Through
2. Components	
a. Filter	
Type	Med Efficiency
Quantity	1
Media	Glass Fiber
Efficiency	80%
b. Cooling Coil	
Type	Direct Expansion R-22
Quantity	1
Cooling Capacity	52,200 BTU/hr
c. Heating Coil	
Type	Electric
Quantity	1
Capacity	51,180 BTU/hr

TABLE 9.4-32
SERVICE BUILDING HVAC SYSTEM (Continued)

NAME OF EQUIPMENT	NUMBER, TYPE, QUANTITY AND VENDOR RATED CAPACITY
d. Fan	
Type	Centrifugal
Drive	Belt
Quantity	1
Capacity	1500 CFM
Static Pressure (inches water)	4.3
Motor HP	3
J. Deleted	
K. Deleted	
L. Service Building HP Counting Room Supply	
1. HEPA Filter	0VS06F
Type	High Efficiency
Quantity	1
Media	Glass Fiber
Efficiency (% minimum 0.3 micron and larger)	99.97
Capacity (cfm)	2,710
2. Fan	0VS21C
Type	Centrifugal
Drive	Direct
Quantity	1
Capacity (cfm)	3,200
Static Pressure (inches water)	1.5
Motor (hp)	1.5
M. Service Building West Conference Room Exhaust Fan	0VS22C
Type	Centrifugal
Drive	Direct
Quantity	1
Capacity (cfm)	670
Static Pressure (inches water)	0.25
Motor (hp)	1/20

TABLE 9.4-32
SERVICE BUILDING HVAC SYSTEM (Continued)

	NAME OF EQUIPMENT	NUMBER, TYPE, QUANTITY AND VENDOR RATED CAPACITY
N.	Service Building Kitchen Exhaust Fan	0VS24C
	Type	Centrifugal
	Drive	Direct
	Quantity	1
	Capacity (cfm)	350
	Static Pressure (inches water)	0.5
	Motor (hp)	1/22
P.	Service Building East Conference Room Exhaust Fan	0VS23C
	Type	Centrifugal
	Drive	Direct
	Quantity	1
	Capacity (cfm)	660
	Static Pressure (inches water)	0.5
	Motor (hp)	1/11
Q.	Service Building Halon Purge Fan	0VS25C
	Type	Centrifugal
	Drive	Direct
	Quantity	1
	Capacity (cfm)	1,540
	Static Pressure (inches water)	0.75
	Motor (hp)	1/3
R.	Service Building Security Area Battery Room Exhaust Fan	0VS26C
	Type	Centrifugal
	Drive	Direct
	Quantity	1
	Capacity (cfm)	270
	Static Pressure (inches water)	0.625
	Motor (hp)	1/4

TABLE 9.4-32
SERVICE BUILDING HVAC SYSTEM (Continued)

NAME OF EQUIPMENT	NUMBER, TYPE, QUANTITY AND VENDOR RATED CAPACITY
S. Service Building Exterior Zone Exhaust Fan	0VS27C
Type	Centrifugal
Drive	Direct
Quantity	1
Capacity (cfm)	1,540
Static Pressure (inches water)	0.75
Motor (hp)	1/3
T. Security Control Room Backup Air Handling Unit	0VS30S
1. Type	Packaged
2. Components	
a. Filter	
Type	Disposable
Efficiency	30% minimum
b. Cooling Coil	
Type	Direct Expansion
Quantity	1
Cooling Capacity (BTU/hr)	14,500
c. Supply Fan	
Type	Centrifugal
Drive	Direct
Quantity	1
Capacity (CFM)	950
External Static Pressure (in. w.g.)	.23
Motor (hp)	1/4
U. Computer Equipment Rooms Backup Air Handling Units	0VS31SA, 0VS31SB
1. Type	Packaged
2. Components	
a. Filter	
Type	Disposable
Efficiency	30% minimum

TABLE 9.4-32
SERVICE BUILDING HVAC SYSTEM (Continued)

NAME OF EQUIPMENT	NUMBER, TYPE, QUANTITY AND VENDOR RATED CAPACITY
b. Cooling Coil	
Type	Direct Expansion
Quantity	1
Cooling Capacity (BTU/hr)	37,700
c. Supply Fan	
Type	Centrifugal
Drive	Direct
Quantity	1
Capacity (CFM)	1500
External Static Pressure (in. w.g.)	.65
Motor (hp)	1/2
V. Electrical Equipment Room and Battery Room Backup Air Handling Unit	0VS32S
1. Type	Packaged
2. Components	
a. Filter	
Type	Disposable
Efficiency	30% minimum
b. Cooling Coil	
Type	Direct Expansion
Quantity	1
Cooling Capacity (BTU/hr)	36,700
c. Supply Fan	
Type	Centrifugal
Drive	Direct
Quantity	1
Capacity (CFM)	1500
External Static Pressure (in. w.g.)	.65
Motor (hp)	1/2

TABLE 9.4-33
RADWASTE BUILDING AREA VENTILATION SYSTEM

NAME OF EQUIPMENT	NUMBER, TYPE, QUANTITY AND VENDOR RATED CAPACITY (PER COMPONENT)
A. Radwaste Building Ventilation Supply	
1. Type	Built-up
2. Components	
a. Fans	0VW03CA, 0VW03CB
Type	Vaneaxial
Quantity	2
Drive	Direct
Capacity (cfm at .074 lb/ft^3 density, blade setting of 25)	42,466
Total pressure (in. H_2O)	6.08
Motor (hp)	60
b. Filter	0VW05F
Type	Medium efficiency
Quantity	1 Bank
Efficiency (% by NBS dust spot method)	55
Capacity (scfm)	41,900
Media	Glass fiber
c. Heating Coil	0VW01A
Type	Electric
Quantity	1 Heater
Capacity (kW)	876
d. Cooling Coil	0VW02A
Type	Chilled water
Quantity	1
Capacity (Btu/hr)	2,526,000
Chilled water (gpm)	351
Air Flow (scfm)	41,900

TABLE 9.4-33
RADWASTE BUILDING AREA VENTILATION SYSTEM (Continued)

NAME OF EQUIPMENT	NUMBER, TYPE, QUANTITY AND VENDOR RATED CAPACITY (PER COMPONENT)
B. Radwaste Building Ventilation Exhaust	
1. Type	Built-up
2. Components	
a. Fans	0VW04CA, 0VW04CB
Type	Centrifugal
Quantity	2
Drive	Direct
Capacity (cfm at .067 lb/ft^3 density)	50,989
Static pressure (in. H_2O)	11.5
Motor (hp)	150
b. Filter Package	0VW06SA, 0VW06SB
(1) Prefilter	0VW42FA, 0VW42FB
Type	Disposable cartridge
Quantity	1 Bank
Efficiency (% by NBS dust spot method)	85
Capacity (scfm)	21,400
Media	Glass fiber
(2) HEPA Filters	0VW41FA, 0VW41FB
Type	High efficiency
Quantity	1 Bank
Capacity (scfm)	21,400
Media	Glass fiber, water-proof fire resistant
Efficiency (% minimum 0.3 micron dioctyl phthalate smoke)	99.97

TABLE 9.4-34
RADWASTE BUILDING VENTILATION SYSTEM
FAILURE ANALYSIS

COMPONENT	MALFUNCTION	COMMENTS
Supply or Exhaust Fan	Failure of a fan resulting in loss of duct pressure	Failure of an operating fan will actuate an alarm on the supply or exhaust system local control panel (SSLCP or ESLCP). If fan is operated from remote radwaste operations center (ROC), the alternate fan will automatically start. If fan is operated from SSLCP or ESLCP, the alternate fan will be started manually.
	Total loss of system air flow due to power failure	Backdraft dampers are employed between clean and potentially contaminated areas. This minimizes the backflow of contaminated air to clean areas in the case of a loss of a-c power and subsequent fan system shutdown.
Exhaust Filter	High particulate loading resulting in reduced air capacity	Pressure differential switches measuring pressure drop across filters will cause local alarm indicating need for filter change long before filters are completely loaded.
	Filter Failure	Any particulate break-through in the exhaust filters, which could cause offsite dose problems, will be detected by the radiation monitors located in the common station HVAC vent stack.
Flow Control Damper on Main Supply	Fail closed	Low flow is detected by pressure switch on duct mounted air flow element and alarmed on the local control panel. Supply fan will trip and an exhaust fan allowed to operate to maintain building negative pressure.
	Fail open causing possible loss of building pressure control	Low radwaste building pressure differential pressure switch could alarm on the local control panel.

9.5 OTHER AUXILIARY SYSTEMS

9.5.1 Fire Protection System

The following documents, in addition to USAR Subsection 9.5.1, discuss the Fire Hazards and Major Fire Protection Program commitments and as such, constitute the bases for the Fire Protection Program at Clinton Power Station:

a. Clinton Power Station Unit 1 Fire Protection Evaluation Report (FPER).

b. Clinton Power Station Unit 1 Safe Shutdown Analysis (SSA).

The aforementioned documents are incorporated into the CPS USAR as Appendix E and F, respectively.

The CPS position regarding compliance to Appendix R of 10 CFR Part 50 is specified as follows:

Appendix R Section	CPS Position
II.A	Comply; see Clinton Power Station Fire Protection Evaluation Report (CPS-FPER) Pages E4.1-1 and E4.1-2.
II.B	Comply; see CPS-FPER Section 3.0 and the Clinton Safe Shutdown Analysis (CPS-SSA) Section 3.0.
II.C	Comply where applicable; fire prevention features are provided based on the results of the fire hazards analysis as provided in the CPS-FPER. Deviations for not providing required fire prevention features in areas that contain or present a fire hazard to structures, systems, or components are provided in the CPS-SSA; see CPS-FPER Sections 1.0, 3.0 and 4.0, CPS-SSA Section 4.2, and this Section.
II.D	Compliance with these requirements is discussed in the Clinton Safe Shutdown Analysis (CPS-SSA) Section 3.0.
III.A	Comply where applicable; see CPS-FPER Subsections 3.1.2.6 and 4.0.E.2.f.
III.B	Comply; sectional valves with post indicators allow the isolation of any one section without affecting the balance of the system. See CPS-FPER Subsections 3.1.2.6 and 4.0.E.2.a and b.

III.C	Comply; see CPS-FPER Subsection 3.1.2.6.
III.D	Comply; With the exception of one hose station located in the drywell. Isolation valves are provided on both sides of the drywell penetration. See CPS-FPER Subsections 3.1.2.7, 3.3, and 4.0.E.3.d.
III.E	Comply.
III.F	Comply where applicable; automatic fire detection is provided based on the results of the fire hazards analysis as provided in the CPS-FPER. Detection systems are capable of operating with or without offsite power. Deviations for not providing detection in areas that contain safety-related systems or components are provided in the Clinton Safe Shutdown Analysis, Section 4.2.
III.G	Comply with exceptions; the Clinton Safe Shutdown Analysis provides deviations to this requirement in Section 4.2.
III.H	Comply. See CPS-FPER Section 4.0.B.4.
III.I	Comply. See CPS-FPER Section 4.0.B.5.
III.J	Comply. See CPS-FPER Section 4.0.D.5 and USAR Section 9.5.3.

NOTE

Emergency lighting for remote shutdown has been provided which meets the requirements of section III J of 10CFR50 Appendix R, and NRC Branch Technical Position APCSB 9.5-1 Sections 5a and 5b.

Appendix R Section	CPS Position
	Should the main control room become inaccessible/uninhabitable (see 7.4.1.4.1.2) and remote shutdown is required, Division I equipment is the primary backup for achieving safe shutdown. Fixed emergency lighting with 8-hour minimum battery supplies is provided for manned workstations and remote manual action locations required to achieve safe shutdown utilizing Division I equipment, and the credited access and egress paths. Portable 8-hour battery powered emergency lights are provided for the one-time local manual actions to preclude the effects of multiple spurious operations. Should Division I become unavailable, provisions have been made to restore the Division I to achieve remote shutdown should the main control room become uninhabitable. Although Division II is not credited as a backup for Safe Shutdown, if Division II power is available, the Division II Standby Lighting Cabinets (SLCs) (AC powered) will be powered and the Division II manned workstations or remote manual action locations will be illuminated. If Division II power is not available, it will not be necessary for the operators to go to the Division II manned workstations or remote manual action locations; therefore, fixed Appendix R battery-pack emergency lighting has not been provided in Division II remote shutdown manned workstations or remote manual action locations. However, the path to the Division II diesel-generator room does have fixed emergency lighting units installed in accordance with Appendix R Section III. There is also fixed battery-powered lighting in the Division II Diesel-Generator room.
III.K	Comply. See CPS-FPER Section 4.0.B.
III.L	Compliance with these requirements is discussed in the CPS-SSA.
III.M	Comply. See CPS-FPER Sections 4.0.D.1 and 4.0.D.3.
III.N	Partially comply. All fire doors, with the exception of watertight, security airlock, rolling steel, and containment airlock doors are self-closing.

Appendix R Section	CPS Position
	Fire door inspection procedures are in compliance with Appendix R requirements. Deviations for the watertight, security airlock, and containment airlock doors are contained in the Clinton Safe Shutdown Analysis, Subsections 4.2.2.4, 4.2.2.5, and 4.2.2.14, respectively. There are two types of fire doors in the diesel generator areas, which are protected by total flooding carbon dioxide systems: swing type and rolling steel type fire doors. The swing type doors are self-closing but not electrically supervised. The rolling steel doors are not self-closing and are not electrically supervised. All doors are either locked and inspected weekly, or closed and inspected daily.
III.0	Comply with intent. Each reactor recirculation pump is lubricated by a non-pressurized lube oil system which is self-contained within the metal motor housing except for the minor amount lube oil in the 1 gallon automatic oiler and its piping connections off the lower bearing reservoir. All parts of the lubricating oil reservoir have been qualified to withstand a safe shutdown earthquake and remain structurally intact. The pumps are water-cooled. See CPS-SSA, Section 4.2.5 for deviation from this requirement. (Q&R 410.7)

Safe shutdown was addressed in the CPS Unit 1 Safe Shutdown Analysis for Fire Protection, submitted to the NRC by IPC letter U-0586 dated December 16, 1982 and amended by IPC letter U-0630 dated April 5, 1983. (Q&R 430.01)

9.5.1.1 Design Bases

The design of the Clinton Power Station fire protection systems is based on the evaluation of potential fire hazards throughout the plant and the effects of postulated fires on the ability to achieve and maintain a safe shutdown condition, and the ability to minimize and control the release of radioactivity to the environment.

The design bases are intended to provide defense-in-depth by:

a. Preventing a fire from starting.

b. Rapidly detecting and extinguishing fires that occur to limit fire damage.

c. Designing of safety-related systems such that if a fire occurs and burns for a considerable period of time, safe shutdown can be achieved and maintained.

d. Designing fire protection systems such that normal or inadvertent operation will not impair safe shutdown systems.

Significant combustibles and compressed gases located within Clinton Power Station are listed in Section 3.0 of the CPS FPER. Noncombustible or fire-resistant materials are used wherever practicable. Administrative procedures cover storage of high pressure gas and other hazardous materials. Fire loading and postulated fires that could affect nuclear safety-related systems and components are also discussed in detail in this section of the CPS FPER Section 3.0. A comparison of the Clinton Power Station fire protection program with NRC BTP APCSB 9.5-1 Appendix A is presented in Section 4.0 of the CPS FPER.

The CPS document "NFPA Code Conformance Evaluation With Completed Checklists", prepared prior to CPS entering into commercial operation, identifies the level of compliance of the CPS fire protection program with NFPA codes and, where appropriate, provides technical justification for deviations based on the fire protection equipment and procedures which existed at that time. It is updated when it is necessary to clarify code deviations.

The following documents, codes standards, and guidelines are utilized in the fire protection system designs as applicable:

a. American Nuclear Insurers' Basic Fire Protection for Nuclear Power Plant Engineering Guidelines.

b. National Fire Protection Association (NFPA) Codes:

10 Portable Fire Extinguishers,

12 Carbon Dioxide Extinguishing Systems,

12A Halon 1301 Systems,

13 Sprinkler Systems, Installation,

14 Standpipe & Hose Systems,

15 Water Spray Fixed Systems,

20 Centrifugal Fire Pumps,

24 Outside Protection,

27 Private Fire Brigades,

30 Flammable and Combustible Liquids Code,

50A Gaseous Hydrogen Systems at Consumer Site,

70 National Electrical Code,

72 National Fire Alarm Code,

72A Local Protective Signaling Systems,

72D Proprietary Protective Signaling Systems,

72E Automatic Fire Detection,

75 Electronic Computer/Data Processing Equipment,

80 Fire Doors and Windows,

101 Code for Safety to Life from Fire in Buildings and Structures,

232 Protection of Records,

750 Water Mist Fire Protection Systems,

803 Nuclear Power Plants, and 1961 Standard for Fire Hose,

2001 Clean Agent Fire Extinguishing Systems.

c. Uniform Building Code.

d. "Conduit Fire Protection Research Program", final report dated June 1, 1987 conducted by Wisconsin Electric Power and Professional Loss Control Inc.

e. NQA-1 (1994): The CPS Records Storage Facilities comply with NFPA 232 as applied to 2-hour rated fire resistant file rooms and with exceptions as noted in the Fire Protection NFPA Code Conformance Report. Cabinets with a one hour minimum fire rating are used for temporary storage of records. Early warning ionization smoke detection, and a Halon 1301 fire suppression system are provided. The detection/suppression system has electronic supervision and alarms at the main control room fire protection panel. The door to the records storage facility is a 4-hour rated vault-type door which is not self-closing or electronically supervised.

The Quality Assurance program described in Chapter 17 to meet 10 CFR 50 Appendix B satisfies the minimum requirements for fire protection systems as delineated in Regulatory Guide 1.120 and is applied as appropriate.

9.5.1.1.1 Design Bases, Control Room

The control room fire protection system is designed to detect a fire, alert control room personnel, and suppress the fire. This is accomplished through the use of thermal detectors, ionization detectors and Halon 1301.

Safety-related systems are designed so that if a fire occurs in the control room, safe shutdown can be accomplished. When necessary, control can be transferred to the remote shutdown panel.

Normally, the PGCC Halon system will automatically initiate when it receives an alarm signal associated with a thermal detector. Audible and/or visual alarms are provided to alert control room personnel so they can manually initiate the fire protection system if necessary.

Detection and suppression is provided for the floor sections within the control room and detection is provided for the panels and termination cabinets. Additionally, the PGCC modules have quickly removable floor plates, lateral duct covers and fire stops.

The design of the Halon fire suppression system in the control room complies with NEDO 10466-A, NEDO 10466-A Addendum 1, and NFPA 12A-1973.

9.5.1.2 System Description

9.5.1.2.1 General Description

The description of the fire protection system is presented in the following sections of the CPS FPER:

a. Section 3.0 - Fire Hazards Analysis, and

b. Section 4.0 - Compliance with BTP APCSB 9.5-1 Appendix A, Plants Under Construction and Operating Plants.

The fire protection system consists of an inventory of 900,000 gallons of water in the ultimate heat sink allocated solely for fire protection system usage, two 100% capacity diesel-driven fire pumps (primary fire protection system water supply), one connection to the plant service water system, a dedicated pressure maintenance jockey pump,underground yard water mains, hydrants, standpipes, hose stations, sprinklers, deluge spray systems, automatic Halon 1301 systems, automatic carbon dioxide systems, automatic water mist systems, automatic FM-200 Clean Agent systems, thermal detectors, flame detectors, ionization detectors, photoelectric smoke detectors, incipient fire detectors, alarms, fire barriers, fire-stops, portable fire extinguishers, portable breathing apparatus, ventilation systems, and associated controls and appurtenances.

The fire protection system is designed such that normal or inadvertent system operation will not induce failure of safe shutdown systems.

The safe shutdown capability of the plant under a postulated fire is demonstrated in the CPS Safe Shutdown Analysis (SSA). Electrical safety-related divisions and electrical cable protection are addressed in Section 3.0 of the CPS FPER.

Ventilation systems, including smoke and heat removal systems, are discussed in further detail in Subsection 3.1.2 of the CPS FPER and the individual fire zone descriptions are given in Sections 3.2 through 3.9.

9.5.1.2.1.1 Control Room General Description

The control room fire protection system provides protection for each PGCC panel module and includes ionization detectors, thermal detectors, Halon storage containers, manual pull stations, initiators, alarm bell, and piping distribution system and nozzles. The main source of power is

the station Class IE 120-Vac system. A 24-Vdc 6 amp-hour backup battery is provided for each controller. The control room fire protection system is a Class A system (per NFPA 72D-1975).

9.5.1.2.2 System Operation

9.5.1.2.2.1 Fire Protection System Central Control Station

Fire Protection Panel 1H13-P840, Fire Protection Alarm Panel 1H13-P841, and Fire Protection Printer Terminals 1H13-P842 and 1H13-P843, all located in the main control room, together serve as the fire protection system central control station for the sprinkler system, CO_2, Halon, fire detection, standpipe water flow, diesel fire pump, and smoke vent portions of the Clinton Power Station.

Local control panel 1FP43J, located in the auxiliary electrical equipment room, collects some local fire protection signals and annunciates trouble or alarm at 1H13-P841 with printout of precise data on the printer terminal.

Devices located at the fire protection system central control station are as follows:

a. fire protection annunciator displays

b. supplementary initiation pushbuttons for preaction, deluge, CO_2, Halon, water mist, and FM-200 clean agent fire suppression systems

c. control switches and indicating lights for turbine building smoke vents and doors

d. remote start pushbuttons for diesel fire pumps

e. fire and trouble alarm printer.

The power source for the fire protection alarm panel and printer terminals is the station Class 1E 120-Vac system. The alarm panel is equipped with a minimum 24-hour battery backup as its secondary power source. Alarm panel 1H13-P841 monitors the integrity of the following circuits (Class A per NFPA 72D-1975):

a. all incoming suppression system fire alarm and supervisory circuits

b. all diesel fire pump alarm and supervisory circuits

c. all service water to fire protection system water flow alarm and supervisory circuits

d. all fire detection circuits (either directly or through the 1FP43J panel)

The fire protection panel (1H13-P840) is not UL-listed. It was designed, supplied, and qualified by General Electric as part of the power generation control complex (PGCC).

The purpose of the fire protection system central control station is to indicate to the operator any abnormal fire protection system variables by use of distinct audible, visual and printed alarms. Operation of any audible alarm on the fire protection system central control station also alarms a common annunciator point on the balance of plant annunciator panel 1H13-P800, located in the main control room.

9.5.1.2.2.2 Fire Protection Water Supply System

The fire protection water supply consists of pumps, underground yard water mains, building internal water mains, and isolation valves as shown on Drawing M05-1039, sheets 1 through 10.

The capacity of the fire protection water supply system is based on the maximum fixed water sprinkler system demand serving a safety-related area with the simultaneous demand of 500 gpm for firehose streams. Two 100% capacity diesel-driven fire pumps are provided as the primary fire protection system water supply. The fire pumps are the vertical wet pit type with a diesel engine drive. The fire protection water system is crossconnected to the plant service water system through a separate connection. The connection has a normally locked shut gate valve, and a check valve to prevent fire water flow into the plant service water system. The plant service water system employs two normally operating and one standby motor-driven pumps. Fire protection system water pressure is maintained by a dedicated pressure maintenance jockey pump. On low fire protection water pressure, the diesel-driven fire pumps are automatically started.

The diesel-driven fire pumps are UL approved and rated at 2500 gpm at 350 ft total developed head. Each of the diesel-driven fire pump units includes an individual pump, diesel drive, control panel, diesel fuel system, and exhaust system. Each pump is automatically started by low pressure sensed in the pump discharge header or can be manually started by operator action in the main control room. The diesel-driven fire pump units are separated such that a fire cannot disable both pumps.

Each diesel fire pump is provided with a local control panel. A remote start pushbutton is provided for each diesel fire pump at the fire protection system central control station. The following alarms appear on the local control panels and the fire protection system central control station:

a. failure to start

b. low fuel level

c. engine running

d. control switch not in AUTO position

e. pump room low temperature (Pump B only).

The following alarms appear individually at each of the local control panels and are combined into a common "Trouble" alarm for each diesel fire pump at the fire protection system central control station:

a. engine overspeed

b. low oil pressure

c. high water temperature

d. AC failure

e. battery 1 failure

f. battery 2 failure.

The diesel fire pumps are installed in accordance with NFPA 20-1976. The power supply to the controller is from the station non-Class 1E 120-Vac power system.

The water for the fire protection system is pumped from the ultimate heat sink of Lake Clinton. A water inventory of 900,000 gallons in the ultimate heat sink has been allocated solely for fire protection system usage.

An underground fire protection water main loop is installed around the Clinton Power Station. The underground loop is constructed of 12- and 14-inch diameter, welded carbon steel pipe and 12-inch UL listed flanged cast iron valves. All 14" non-UL/FM approved valves in the underground loop are flanged cast iron and accepted by American Nuclear Insurers. The valves are installed with post-indicators and are used for sectional isolation of the loop. The underground loop is connected to each diesel-driven fire pump in the circulating water screen house by a 14-inch diameter pipe line.

Two-way hydrants controlled by individual curb box valves are installed along the main loop at intervals of approximately 325 feet and in no case over 400 feet. A standard hose house is provided at each hydrant in accordance with NFPA codes. Each hose house is equipped with sufficient hose lengths. Hose houses are equipped using NFPA 24-1973 as a guideline.

Headers are located in buildings to supply multiple sprinkler systems and fire hose standpipes. Headers are supplied by redundant connections to the underground main loop. The headers are 12- and 10-inch diameter, welded, carbon steel pipe and valves. The fire protection water sprinkler system and firehose standpipes have branched connections from the main loop. Valves are provided in the headers for section isolation without adversely affecting the fire protection system capabilities.

9.5.1.2.2.3 Water Sprinkler and Hose Standpipe Systems

The fire protection spray systems and hose standpipes have branch connections from the main loop. Firehose standpipes are wet standpipe systems of a minimum 4-inch diameter for miltiple-hose connections and a minimum of 2.5 inches in diameter for a single-hose connection, with supply isolation valves. Water pressure is normally maintained at all times, except for those containment and drywell hose standpipe systems which are located downstream of closed valves 1FP051 and 1FP054. Pressure gauges are provided at the top of each standpipe in accordance with NFPA 14-1976.

Flow switches are provided in each of the standpipes as well as in the piping connection between the plant service water system and the fire protection system. An alarm for each of these switches in the power block is provided at the fire protection system central control station.

Firehose stations are located in the plant buildings at approximately 100-foot intervals. The firehose stations are wall cabinet units or hose rack unit types. Each hose station is equipped with a maximum of 100 feet of 1 1/2-inch lined firehose and an adjustable spray nozzle, except that two hose stations, located in the main steam tunnel and outside the control room, have an

additional 50 feet of hose stored nearby to provide adequate coverage. Straight stream nozzles are provided for selected hose stations in the fuel building.

A single break in the fire protection water supply piping will not eliminate both the primary and secondary water suppression systems in any fire zone. The Clinton Power Station utilizes five types of water suppression systems as follows:

a. automatic wet pipe,

b. automatic preaction,

c. manual preaction,

d. automatic deluge, and

e. manual deluge

Each water suppression fire protection system (deluge, preaction, or wet pipe), with the exception of deluge systems for charcoal filters for the VC, VQ and VG systems (which are in compliance with Regulatory Guide 1.52, and are not required to conform to NFPA Codes), has a local control panel. Thermal detectors, water flow switches, manual pull stations, sprinkler piping, air pressure switches, and shutoff valve tamper switches (as applicable to each type of system) are connected to the local control panels. A local fire alarm bell is provided for each panel. Circuits for detectors, manual pull stations, and flow switches connected to the local panels are monitored for integrity.

Alarms for each local control panel are provided at the fire protection system central control station via a Class A multiplexing loop per NFPA 72D-1975. Alarms for deluge systems for the VC and VG systems charcoal filters are provided at 1H13-P801.

The power source for the local control panels located in buildings that do not contain safety-related equipment is the station nonClass 1E 125 Vdc system. The power source for the local control panels in buildings that contain safety-related equipment is the station Class 1E 125-Vdc system.

Automatic Wet Pipe Svstems

These systems employ automatic sprinklers attached to a piping system containing water under pressure at all times. When a fire occurs, individual sprinklers are actuated by the heat, and water flows through the sprinklers immediately. A flow alarm for each system is provided at the fire protection system central control station.

Preaction Systems

Preaction systems are dry pipe systems. For systems with greater than 20 sprinklers, the air in the piping is pressurized. When a fire occurs, a fire detector in the protected area is actuated. For the automatic systems, this opens a valve which permits water to flow into the piping system and be discharged through automatic sprinklers that have been opened by the heat of the fire. For manual systems this initiates an alarm which requires a station operator response to open the valve which permits water to flow into the piping system.

Deluge Systems

These systems are similar to preaction systems, except that all sprinklers are open at all times. For automatic operation, heat from a fire actuates the fire detecting device and opens the supply valve. Water flows to and is discharged from all sprinklers on the piping system thus "deluging" the protected equipment.

For manual operation, heat from a fire actuates the fire detector and initiates an alarm which requires a station operator to open the supply valve.

Each sprinkler system, with the exception of deluge systems for VC, and VG system charcoal filters, is provided with a system isolation or shutoff valve and a flow alarm indicator device. Deluge systems for the RA, VC, and VG systems have isolation valves.

The types of sprinkler systems employed in fire hazard areas are identified in Section 3.0 of the CPS FPER, on the fire hazards zone drawings, and on the fire protection system piping and instrumentation diagram (P&ID) drawings.

The sprinkler systems of the Clinton Power Station are designed, fabricated, and installed in accordance with applicable NFPA Codes and Standards. The sprinkler system valves, controls, and components are UL listed or FM approved where required.

9.5.1.2.2.4 Halon Suppression Systems

Halon suppression systems are installed in the QA Records file room, the telephone equipment room within the service building, the plant security computer room, the auxiliary electric equipment room computer area, and the control room power generation control complex (PGCC) floor sections. Fire protection for PGCC is described in Subsection 9.5.1.2.2.9.

The Halon suppression systems are total flooding systems. A sufficient quantity of extinguishing agent can be automatically discharged into the enclosure to provide adequate fire suppression capability. The fire extinguishing agent is stored outside the protected enclosures.

Local panels provide local control and monitoring of detectors, pull stations, and release solenoid circuits. Detector and pull station circuitry is Class A for the auxiliary electrical equipment room computer area and the plant security computer room Halon systems. The remaining circuitry for these rooms and the circuitry for the QA records file room and telephone equipment room is Class B. Alarms are provided in the fire protection system central control stations for fire and trouble for these systems. The power supply for these systems is the station Non-Class 1E 120-Vac system, except for the auxiliary electrical equipment room which has a power source from the station Class 1E 240-Vac system. Local panels for all systems contain internal battery backup per NFPA codes and standards.

The Halon fire suppression systems are designed, fabricated, and installed in accordance with NFPA 12A-1973 standards.

9.5.1.2.2.5 Carbon Dioxide Fire Suppression System

Carbon dioxide fire suppression systems are provided for the Division 1, 2 and 3 diesel-generator rooms, and the main turbine generator exciter enclosure. These systems are automatically initiated, low-pressure type systems.

The diesel-generator carbon dioxide fire suppression system employs two 6-ton capacity storage tanks connected to individual piping and controls in each of the three diesel-generator rooms via a main supply pipe header. The system can provide two fire extinguishing flooding applications to any one of the diesel-generator rooms. The CO_2 storage tanks are located outdoors along the north wall of the radwaste building.

The carbon dioxide fire suppression system provided for the turbine generator exciter enclosure is an automatic, low-pressure local application type system. The system utilizes a 5-ton capacity storage tank outdoors along the north wall of the radwaste building. The system can provide two fire extinguishing applications to the generator exciter enclosure plus extra capacity for purging hydrogen from the main generator.

A local control panel is provided for the turbine generator exciter CO_2 system. Three single zone local control panels are provided for the three diesel generator room systems.

Alarms, as well as pushbuttons for remote initiation, for each of these systems are provided at the fire protection system central control station.

The following trouble alarms at the local control panels are combined into a common "Trouble" alarm at the fire protection central control station:

a. detection circuit trouble

b. manual release circuit trouble

c. valve circuit trouble

d. alarm circuit trouble

e. CO_2 discharge disabled

Local detection circuits are monitored for integrity. The power source for the three panels is the station Class 1E 120-Vac system. These panels have 24-hour battery backups, following a loss of offsite power.

The primary power source for the generator exciter enclosure control panel is the station non-Class 1E 120 Vac system. This panel has an internal battery backup per the NFPA Codes and Standards.

The carbon dioxide fire suppression systems are designed, fabricated, and installed in accordance with NFPA 12-1973 standards.

9.5.1.2.2.6 Water Mist Suppression System

Water mist suppression systems are installed in the Static Var Compensator (SVC) buildings for the Reserve Auxiliary Transformer (RAT) and Emergency Reserve auxiliary Transformer (ERAT). These systems are designed, installed, and tested in accordance with the requirements of NFPA 750-1996, to suppress a fire that may occur in the SVC enclosure. The water mist system water supply shall be provided from primary and reserve storage systems. Each storage system shall consist of three (3) 50-liter water cylinders, and one (1) nitrogen

cylinder. The primary and reserve storage systems are connected via a common manifold which in turn is connected to the associated buildings discharge piping and nozzle network.

The actuation of the water mist suppression system is automatic. Rate compensation heat detectors and the incipient fire detection system, is automatic. Rate compensation heat detectors and the incipient fire detection system, installed throughout the room, work together to detect fires in the protected area. Additionally these systems can be activated manually by the pull stations located at each exit, or by the manual release switch located at the storage room.

A local alarm panel is provided for local control and monitoring of detectors, pull stations and release solenoid circuits in each building. A detailed description of the alarm system has been provided in Section 9.5.1.2.2.10.2.

9.5.1.2.2.7 FM-200 Clean Agent Suppression System

The FM-200 suppression systems are installed in the Static Var Compensator (SVC) buildings for the Reserve Auxiliary Transformer (RAT) and the Emergency Reserve Auxiliary Transformer (ERAT). These systems are designed, installed, and tested in accordance with the requirements of NFPA 2001-1996, to protect the SVC control cabinets, which are located within the SVC enclosures.

FM-200 is an environmentally acceptable replacement for Halon 1301. It has zero ozone depleting potential, low global warming potential and a short atmospheric lifetime. FM-200 is a colorless, liquefied gas, that is stored as a liquid, and released as a vapor. The design concentration has been designed to meet a minimum concentration of 7.0% throughout the control cabinet. One nozzle has been located within the control cabinet for directing the FM-200 agent throughout the cabinet.

The actuation of the FM-200 Clean Agent system is automatic. Photoelectric smoke detectors and the IFD system, installed throughout, work together to detect fires in the SVC control cabinets. Additionally, these systems can be activated manually by the manual release switch located at the storage container.

A local alarm panel is provided for local control and monitoring of detectors, pull stations, and release solenoid circuits in each building. A detailed description of the alarm system has been provided in Section 9.5.1.2.2.10.2.

9.5.1.2.2.8 Portable Extinguishers

UL listed or FM approved portable extinguishers of appropriate classification are utilized in the Clinton Power Station. General placement of the fire extinguishers is indicated on the fire protection features drawings included in the FPER and reflects the requirements of NFPA 10-1975. The extinguishers are located based on the fire hazards in the area; the intensity of radiation in the area; to provide easy accessibility; near paths of travel, entrances, and exits; and, to be readily visible. The Clinton Power Station fire protection program includes periodic inspection and testing of the portable extinguishers to ensure their readiness per NFPA 10.

9.5.1.2.2.9 Fire Detection System

The fire detection system for the station consists of a low-voltage, microprocessor-based Pyrotronics XL-3 panel (1H13-P841) and printer terminal (1H13-P842 and 1H13-P843), located

in the main control room, which is connected to automatic fire detectors, local panels, and fire protection system flow switches throughout the station. A local control XL-3 panel, 1FP43J, collects some fire protection and detection signals and annunciates trouble or alarm at 1H13-P841 with printout of precise data on the printer terminal. All standpipe flow switches alarm in the main control room on panel 1H13-P840.

Fire detection for those areas that do not have fire suppression consists of automatic fire detectors located as described in the section titled "Fire Detection and Protection" of each fire zone included in the CPS FPER. The automatic fire detectors used include programmable and nonprogrammable ionization, thermal, and flame detector types.

Local wet pipe systems are equipped with water flow signaling attachments that are Class B wired to the local panels for the systems. The preaction systems are equipped with thermal type fire detectors and water flow signaling attachments that are Class B wired to the lock panels for the system. The automatic deluge systems are equipped with thermal types fire detectors and water flow signaling attachments that are Class B wired to the local panels. The addressable interface modules for each local water suppression system are, in turn, Class A wired to the XL-3 panel in the main control room.

The Halon fire suppression systems for the QA records file room and telephone equipment room are equipped with ionization type fire detectors that are Class B wired to the local panels for the system. The Halon fire suppression system for the security computer rooms is equipped with ionization type fire detectors that are Class A wired to the local control panel for the system. The Halon suppression system for the computer cabinets in the auxiliary electrical equipment room is equipped with a heat sensing type cable that is Class A wired to the local control panel for the system. These Halon panels report to the XL-3 panel in the control room via addressable interface modules using Class A circuits. A Halon fire suppression system is also provided as part of the power generation control complex (PGCC) designed by General Electric Company. The system provides ionization fire detection for panels and termination cabinets that are part of the PGCC and ionization and thermal fire detection for the PGCC floor sections. The design of the PGCC, including the Halon fire suppression system, is addressed in General Electric Company Licensing Topical Report NED0-10466-A

The carbon dioxide fire suppression systems are equipped with thermal type fire detectors that are Class B wired to the local panels for the systems. The CO_2 local panels report to the XL-3 panel in the control room via addressable interface modules using Class A circuits.

Fire and trouble alarms and signals from flow switches from individual suppression systems located throughout the station are transmitted to the XL-3 panel via addressable interface modules located within the local panels. The local panels for the fire suppression systems and the diesel fire pumps alarm on the XL-3 panel. The only flow switch that alarms directly on the XL-3 control panel indicates "service water to fire protection system" flow. The addressable interface modules are Class A wired to the XL-3 control panel and Class B wired to the local panel.

The XL-3 panel 1FP43J is UL-listed and XL-3 panel 1H13-P841 meets the intent of being UL-listed by being located in the Control Room with restricted access. Both panels are for use as a fire protective signaling system and are equipped with 24-hour minimum battery backups. The XL-3 panels display and annunciate fire alarms, trouble alarms, and other XL-3 system activities. In addition, the printer terminals in the main control room provide a hard copy written record of the fire alarms, trouble alarms, and other system activities.

9.5.1.2.2.10 Incipient Fire Detection and Fike Alarm Panels

9.5.1.2.2.10.1 Incipient Fire Detection (IFD) System

The Cirrus-Protec IFD system uses an air pump to draw air samples from the protected area, through a system of hydraulically calculated sample heads and plastic piping, into a high humidity cloud chamber. If smoke particles are present, in the air samples, the moisture in the chamber condenses around the particles, forming a cloud around the smoke. These air samples are analyzed within a detection chamber and outputs are provided, usually in the form of LED bargraphs and 4-20mA and 0-10VDC output signals. The detection system has the ability for three stages of alarm, which are adjusted for the conditions in the protected area.

The water mist suppression system, for the SVC building, is automatically activated when the local control panel receives signals from both the rate compensating heat detectors and the Incipient Fire Detection (IFD) system. The FM-200 suppression system, for the SVC control cabinets, is automatically activated when the local control panel receives signals from both the photoelectric smoke detectors and the IFD system.

9.5.1.2.2.10.2 Fike Local Alarm Control Panel

The Fike local control panel, receives input signals from the detection system present in the protected areas. The local alarm panel, for the SVC building, receives signals from the rate compensation heat detectors, photoelectric smoke detectors, manual pull stations, system pressure switches, and the IFD system panel. The alarm panel also controls the releasing devices for the water mist and the FM-200 systems. Upon receiving a cross-zoned detection signal (heat detectors and IFD for the water mist system, smoke detectors and IFD for the FM-200 system), the panel will initiate a release signal for the appropriate protection system.

In addition to receiving signals to release the protection systems, the local alarm panel also receives trouble signals from the system devices and field wiring. When these signals are received a panel buzzer will be sounded to indicate system trouble condition in the protected area. An alarm bell will be activated for any fire alarm signal received. Pre-discharge horn/strobes will be activated upon the receipt of cross-zoned condition for the associated area. The local alarm panel will also send signals to the Main Fire Control Panel, 1H13-P841, located in the control room.

The signaling line circuits which monitor the smoke detector, addressable input modules and the supervized releasing modules are designed to meet Style 3 (Class B) wiring methods as defined by NFPA 72, Table 3-6.1. The alarm initiating circuit wiring between the addressable input and the alarm devices installed throughout the building (i.e., pull stations, pressure switches, etc.), utilize Style B (Class B) circuit wiring methods as defined by NFPA 72, Table 3-5.1. The circuit wiring between the notification devices (bells and horns) and the alarm panel; and between the supervised releasing modules and the release devices (solenoids or squibbs) utilize Style Y (Class B) circuit wiring methods as defined by NFPA 72, Table 3-7.1. Alarm and trouble conditions are transmitted to the plant proprietary alarm signaling system, 1H13-P841, located in the control room to alert operators of abnormal conditions. The power supply for these systems is the Station Non-Class 1E 120 VAC system. Local panels for all systems contain internal battery backup per NFPA standards.

9.5.1.2.2.11 Turbine Building Smoke Vents

Thirty-four smoke vents are provided in the roof of the turbine building. Each vent has a fusible link trip as well as a solenoid release for manual opening. An alarm is provided at 1H13-P840 that indicates that one or more of the smoke vents is open. A supplementary indicating light is provided for each of six groups of smoke vents that indicates that one or more of the smoke vents in that group is open. A control switch is also provided on 1H13-P840 to open each group of smoke vents. The power supply is from the station non-Class 1E 120-Vac power system.

9.5.1.2.2.12 Control Room Fire Protection System Operation

9.5.1.2.2.12.1 Gaseous Extinguishing Systems

The main control room Halon fire suppression system is designed to detect a fire in the PGCC floor sections using ionization and thermal detectors. Upon receipt of the fire signal associated with the thermal detectors, the Halon system is automatically initiated. The operator may manually initiate the Halon system if necessary. The floor sections are not accessible for occupation and any Halon leaking out is dissipated by the control room ventilation system.

The suppression system is designed to produce a 6% Halon concentration within 10 seconds of initiation and maintain a 6% concentration of Halon for 10 minutes.

9.5.1.2.2.12.2 Fire Protection Zones

The control room protection system is divided into zones for the purposes of detection, alarms and suppression within the control room. Included in each zone is a fire control cabinet, controller, manual pull station, alarms, detectors, detector cabling, suppression system, piping distribution, nozzles and fire stops. The detection circuits are Class A per NFPA 72D-1975. Each fire protection zone is independent and provides fire detection, alarm and suppression for one PGCC panel module.

9.5.1.2.2.12.3 Fire Control Cabinet

A fire control cabinet, housing the Halon containers, valve actuating components, an alarm and a controller, is utilized in each zone. Each cabinet contains a battery which provides four hours of backup power after loss of AC power.

9.5.1.2.2.12.4 Halon Storage Container

Two Halon storage containers are used to meet the concentration requirements of Subsection 9.5.1.2.2.9.1. The containers are designed to hold Halon 1301 in liquified form at ambient temperatures and are charged to a maximum density of 70 pounds per cubic foot. They are super pressurized with dry nitrogen to 360 psig $\pm$ 5% at 70° F. The containers are designed to meet the total pressure of Halon 1301 and nitrogen partial pressure at the maximum anticipated temperature. Each container has an integral lifting ring, pressure gauge, separate filling valve and loss of agent sensing switch. The pressure in the container is automatically relieved on an overpressure of 850 to 1000 psi.

9.5.1.2.2.12.5 Detectors

Two types of detectors are utilized: products-of-combustion and thermal. The products-of-combustion detector is a dual chamber ionization type that operates on visible smoke and invisible products of combustion with a 360° smoke entry. It has an alarm response time of approximately 5 seconds and a built-in light to indicate normal or alarm condition.

The thermal detector senses the surrounding air temperature and is wired to the controller so that when the ambient air temperature reaches 140° F or the rate of rise equals 15° F/min. the alarm circuits are activated and Halon discharge is automatically initiated.

9.5.1.3 Safety Evaluation (Fire Hazards Analysis)

A detailed fire hazards analysis on a zone by zone basis is delineated in Section 3.0 of the CPS FPER. The Safe Shutdown Analysis (SSA) documents the consequences of a postulated fire and demonstrates the ability to achieve and maintain a safe shutdown of the reactor for a single fire anywhere in the plant with the loss of offsite power, except for areas where both of the following have been demonstrated:

(1) Analysis has shown that the fire will not cause a loss of offsite power, and

(2) Dedicated or alternate shutdown capability (per 10CFR50 Appendix R, section III.G.3 and III.L) is not required for safe shutdown.

A detailed fire hazards analysis for PGCC can be found in Appendix C of NED0-10466-1 and its Addendum 1. A detailed report of the floor section fire barrier test is in Appendix F of NED0-10466-A.

9.5.1.4 Inspection and Testing Requirements

Initial construction and preoperational testing of the fire protection system was conducted in accordance with the preoperational test program defined in Chapter 14.

Fire protection surveillance and operability sections of the CPS Technical Specifications have been deleted and an equivalent level of limiting conditions and actions have been incorporated into plant administrative procedures.

Administrative controls are provided through existing plant procedures and the Operational Quality Assurance Program to ensure that the Fire Protection Program and equipment are properly maintained. This includes control of combustibles, control of ignition sources, conduct of periodic tests and inspections, and remedial actions for systems/components out of service. This program emphasizes those elements of fire protection that are associated with safe shutdown as described in the CPS Safe Shutdown Analysis (SSA).

The Manager of Clinton Power Station is responsible for ensuring the fire protection and detection systems are inspected in accordance with plant procedures and ensuring assignment responsibility for those tests and inspections. Personnel responsible for maintenance and testing of fire protection systems and equipment shall receive training for, or be experienced in, such work.

The following fire protection features will be subjected to periodic tests and/or inspections, as specified in plant administrative procedures.

a. Fire Alarm and Detection Systems,

b. Automatic Wet Pipe Sprinkler Systems,

c. Automatic Preaction Sprinkler Systems,

d. Manual Preaction Sprinkler Systems,

e. Automatic Deluge Systems,

f. Manual Deluge Systems,

g. Carbon Dioxide Total Flooding Systems,

h. Halon Flooding Systems,

i. Water Mist Systems,

j. FM-200 Clean Agent Systems

k. Fire Pumps,

l. Fire Barriers (walls, fire doors, penetration seals, fire dampers) and,

m. Manual Suppression (fire hoses, hydrants, extinguishers).

Equipment/components (as listed above) out of service will be controlled through administrative procedures and appropriate remedial actions taken. The program requires all impairments of the fire protection system to be identified and appropriate notification made. As conditions/impairments warrant, remedial actions would include compensating measures in addition to timely efforts to effect repairs and restore equipment to service.

All fire protection seals for all mechanical and electrical penetration configurations are tested to ASTM E-119 or IEEE-634 requirements, whichever standard has the most stringent requirements for the particular application.

9.5.1.4.1 Control Room Fire Protection Inspection and Testing Requirements

The control room fire protection system is inspected and tested in accordance with NFPA requirements.

During the construction phase of the plant, a complete inspection was made of all component locations, wire insulation and crimps, in accordance with site Quality Control procedures and practices.

A point-to-point wire check, high potential dielectric test and performance test are performed and documented to site Quality Control procedures.

The piping system is tested to ensure the integrity of the piping. Alarm systems are functionally tested to verify proper operation.

Periodic testing is performed in accordance with the applicable surveillance procedure.

9.5.1.5 Personnel Qualification and Training

National Fire Protection Association (NFPA) Standards are utilized for guidance on fire brigade personnel requirements.

9.5.1.5.1 Fire Protection Engineer

Within CPS, or as a consultant, there exists a fire protection engineer who is a graduate of an engineering curriculum of accepted standing and who shall have completed not less than 6 years of engineering attainment indicative of growth in engineering competency and achievement, 3 years of which have been in responsible charge of fire protection work. His membership in the Society of Fire Protection Engineers satisfies the above requirements.

9.5.1.5.2 Training Requirements

Training is discussed in Subsection 13.2.1.1.1.

9.5.1.5.3 Administrative Controls

Administrative controls are established in the following areas to maintain the performance of the fire protection systems and personnel:

a. control of combustibles,

b. control of ignition sources,

c. bulk storage of flammable or combustible materials,

d. housekeeping practices,

e. fire fighting procedures,

f. training procedures,

g. quality assurance as it applies to fire protection, and

h. surveillance procedures.

The Fire Protection Program Plan for Clinton Power Station describes the overall fire protection program. It was written in accordance with applicable NFPA codes, Regulatory Guides, and NRC requirements. It provides a description of fire protection functional responsibilities, administrative controls, fire brigade training, controls over combustible and ignition sources, methods for assuring the availability of fire protection systems and equipment, procedures for fighting fires, fire watches, and quality assurance provisions.

In addition, CPS complies with Appendix A, Criteria I, Subcriteria 3, and Section III H, I, and K of Appendix R to 10CFR50 and has implemented the fire protection program delineated in the

NRC supplemental guidance document "Nuclear Plant Fire Protection Functional Responsibilities, Administrative Controls and Quality Assurance" transmitted to Illinois Power on August 29, 1977.

The administrative controls for non-electrically supervised valves controlling water supply to sprinkler systems and hose stations for areas where equipment important to safety is located are as follows: breakaway locks and a periodic surveillance of valves.

9.5.1.5.4 Quality Assurance Requirements

The fire protection pumps, piping, valves, and other equipment meet or exceed NFPA code requirements. The CPS quality assurance program is applied to design control as necessary to meet specification requirements. The quality assurance program of CPS is applied to procurement, installation, testing, and administrative controls as appropriate. Quality assurance requirements for fire protection systems are applicable to those fire detection, suppression, and extinguishing systems, and components serving the following safety-related structures or buildings including connecting piping, wiring, or equipment that may be routed through or located within other areas, but which serve these areas:

a. containment building,

b. control building,

c. diesel-generator building,

d. fuel building,

e. auxiliary building, and

f. screen house.

Additionally, quality assurance requirements for fire protection systems are applicable to the underground water main loop, including any branch connections, up to and including the first isolation valve outside of non-safety related buildings or structures.

9.5.2 Communication Systems

9.5.2.1 Design Bases

The station communication systems are designed to provide reliable intrastation and station to offsite communications.

The communication system consists of:

a. a public address system,

b. a dial telephone system,

c. a sound power telephone system,

d. an intraplant radio system,

e. fiber optic communication system,

f. an CPS emergency radio system,

g. 900MHz personal communication service system

9.5.2.2 System Description

A dial telephone and a public address handset to permit merging for "all call operation" are located adjacent to the remote shutdown panel located in the Division 1 switchgear room. In addition, a sound power jack is located on the back of the panel.

Located within the central area of the main control room, are a dial telephone, four (4) public address handsets, four (4) public address maintenance jacks, one (1) remote control console (to control the operations and maintenance radio base stations), and ten (10) sound power jacks.

Communications to the control room or remote shutdown panel may be accomplished from any one of the PA handset stations, or telephone stations located throughout the plant. Also, many portable "handie talkie" radios may be carried by key plant personnel who will be able to communicate with the control room or remote shutdown panel from any location within the plant. In addition, sound power jacks are located at control and instrumentation panels throughout the plant.

Communications in high noise areas are enhanced as required by using 900 MHz personal communication service (PCS) system portable radios with noise canceling headsets, sound powered noise attenuating headsets with amplifiers, “Handie Talkies” with adjustable volume controls, PA system hand sets with noise canceling microphones, and PA hand sets and telephones in or near noise attenuating booths.

The large diversification of communications at the control room, remote shutdown panel, and working stations (spread throughout the plant) assure reliable communications between these locations under all operating conditions.

The communications system wiring conforms with the National Electric Code Article 800. The communication system radio transmitters comply with applicable regulations. These systems have a history of successful operation at existing plants and are in use daily which assures their availability. In addition, sound power, public address, and radio/telephone are in separate raceways which assure their independence. Radio, 900MHz personal communication service system and telephone do share raceways and cables in some areas of the plant.

a.) A fire within Clinton Power Station could occur anywhere; therefore, to identify all working stations on the plant site where it may be necessary for plant personnel to communicate with the control room or the emergency shutdown panel during and/or following a fire is impractical. However, due to the public address handset stations, telephone stations, and sound power jacks spread throughout the plant and due to the many portable "handie talkie" radios which will be carried by key plant personnel, we believe our design is so diversified that the necessity for plant personnel to communicate with the control room or emergency shutdown panel due to a fire anywhere within the station is met.

Working stations on the plant site have been identified where it may be necessary for plant personnel to communicate with the control room or the emergency shutdown panel during a fire in order to mitigate the consequences of the event and to attain a safe cold plant shutdown. These locations are identified in appropriate plant procedures.

b.) Due to the large number of noise sources located within the station and because most, if not all, surfaces are reflective, it is difficult at best to ascertain the maximum sound levels that could exist at each of the above identified working stations. However, for comparison, the following reasonable assumptions are made:

1) For the auxiliary and control building, elevation 781 feet, working stations, the maximum employee noise exposure dose was expected to be less than 90 dBA for eight hours or less.

2) For the diesel generator bays, the maximum sound level was expected to be less than 115 dBA.

3&4) For the auxiliary and fuel building pump rooms, the maximum employee noise exposure dose was expected to be less than 90 dBA for eight hours or less.

c) The types of communication systems available at each of the above working stations is as follows:

1) Division 1, 2, 3 and 4 battery - portable radio, 900MHz cellular phones, and sound power (PA and telephone nearby).

2) Division 1, 2, 3, and 4 inverter - portable radio, 900MHz cellular phones, and sound power (PA and telephone nearby).

3) Division 1, 2, and 3 1E 4.16-kV switchgear - PA, telephone, portable radio and 900MHz cellular phones (sound power nearby).

4) Turbine EHC cabinet - portable radio, PA, telephone, and 900MHz cellular phones (sound power nearby).

5) Division 1, 2, and 3 diesel generator bays portable radio, PA, sound power, telephone and 900MHz cellular phones.

6) RHR, RCIC, LPCS, HPCS pump rooms - sound power, PA, portable radio, and 900MHz cellular phones.

d) As indicated in part b, the expected maximum background noise levels for all working stations was 90 dBA except for the diesel generator bays, which was expected to be less than 115 dBA.

The sound power headsets are normally usable in an environment of 110 dBC. However, special headsets are available for high noise areas capable of effective communications up to 125 dBC. Therefore, no difficulty is encountered at any working station utilizing sound power to communicate with the control room.

Public address handsets are usable in an environment of 115 dBA or less. However, PA handsets in high noise areas are placed in Burgess Day acoustic booths which provide approximately 16-db sound rejection at 1000 Hz. Also, it was planned to use "double headset assemblies" on maintenance channels in high-noise areas (where required) which provide and additional sound rejection of 30 dB at 1000 Hz.

Therefore, no difficulty is encountered at any working station utilizing PA to effectively communicate with the control room.

Headsets are used with portable radios in high-noise levels which permit effective communication up to 115 dB. Should the need arise, a special headset will be used which has double ear phones and a mouth cup. This headset allows effective communication up to 135 dB.

To permit effective communications utilizing telephone in high-noise levels, transmit confidencers, receiver amplifier, push-to-talk headsets (which silences the talk channel until needed, or Burgess Day acoustic booths are added as required.

e) The communication systems at the working stations was tested during pre-ops to assure adequate communications. Thereafter, these systems are used frequently and any difficulty discovered due to background noise levels is corrected by special sound attenuation equipment.

f) The power sources to the various communications systems are ultimately supplied from the divisional diesel generators and not shed during LOCA. They are separately fed as follows:

Sound Power System	(Voice Operated)
Public Address System	Mixture of Division 1 & 2 Standby Lighting Cabinets
Operations Radio System	Division 1 Motor Control Center
Maintenance Radio System	Division 2 Motor Control Center
Telephone System	Normal supply is from a 12KV loop; automatic switch to 12 hour backup battery.
900MHz PCS Cellular System	Normal supply is from non-Class 1E power source; automatic switch to 2 hour backup battery.

g) Protective measures were incorporated into the design of the communication systems to assure a functionally operable onsite communication system. Sound power, public address and radio/telephone are in separate raceways. Sound power, radio, telephone and PA are all independent from each other, and so designed that component failure or the severing of a communication line will only disable a small portion of that particular communication system. (Q&R 040.23)

The personal communications service system (PCS) shares trays and cables with the telephone system and conduits with the telephone, PA, and sound power systems. A PCS cable has the potential of partially disabling another communication system.

9.5.2.2.1 Public Address System

The public address (PA) system consists of one system with interconnections to perform functions described herein. The PA system is made up of five maintenance party lines with one maintenance paging channel, and four plant party lines with two plant party paging channels, and consists of an integrated system of speakers and handset paging units located in designated plant areas.

The PA system includes handset stations, speakers, jack stations for access to maintenance party lines, a multitone signal generator, and merge-isolator assembly for manually merging the maintenance and plant party lines.

During normal operation of the PA system, the five maintenance channels and one maintenance paging channel are independent from the four plant party channels and the two plant party paging channels.

Pages initiated on the maintenance paging channel will only be heard by other maintenance stations with plug-in jacks connected.

Pages initiated from a plant handset station can be heard throughout CPS or just at selected PA stations. Where the page can be heard depends on which page channel the handset can receive.

Plant PA handset stations have access to either a page 1 channel or a page 2 channel. Pages initiated from a plant PA handset which has access to the page 1 channel will only be heard at plant PA stations which have access to the page 2 channel. Pages initiated from a plant PA handset which has access to the page 2 channel will be heard at all normal plant PA stations at CPS. Speakers adjacent to handsets are muted during operation of the handsets to facilitate voice communication. Each individual speaker (except for ceiling mounted speakers) is provided with an amplifier.

Plant PA stations located in the main control room, remote shutdown area, and security stations have access to the page 2 channel.

Also, some of the selected handsets are provided with controls to be used for the "all call" mode or for the multitone signal generator for general plant alarms. The tone generator activates normally silent speakers in the Service Building and Laboratory areas for the general plant alarms. "All call" will also activate messages to such areas. The sound level produced by the tone generator is approximately 10 decibels above the ambient noise level and is between 75 and 130 decibels at locations where personnel are normally assigned work tasks over a period of time exceeding a week. For the remainder of the plant, alarms/ emergency messages will be provided by a combination of the existing PA, alternate communications devices (two-way radios, telephones, etc.), site procedures (Emergency Planning and Security), and general training practices.

9.5.2.2.2 Dial Telephone System

The dial telephone system consists of company owned PBX equipment and telephone stations located throughout the plant and the main control room. The power supply to the telephone PBX equipment is a normal 52 VDC supply. The backup is an automatic switchover to a 52 VDC 12 hour battery. 8 lines are operational if total power via normal and backup is lost.

9.5.2.2.3 Sound Powered Telephone System

Sound powered telephones are used in areas where instrumentation racks and controls are installed. This system is designed as an aid to testing and calibrating instrumentation and controls. The sound powered telephone system includes one jack at or near: every local control panel, each instrument rack having annunciator or analog instrumentation, the transducers and sensors power supply cabinet, the miscellaneous auto controls cabinet, the EHC cabinet, each auxiliary relay rack, and other areas within the plant which may require continuous communications for long periods of time. In the main control room, multiple jacks are installed on columns in the area of the back row panels with the main patch panel located on a wall in that area. Multiple jacks are also provided on control boards in the operator's console area. Jacks in the radwaste area are connected to a separate patch panel with connections to the main patch panel.

9.5.2.2.4 Intraplant Radio System

The intraplant radio system is designed to provide radio communications throughout the plant from remote control consoles in the MCR to various "handie talkie" units, and to provide direct radio communications from "handie talkie" to "handie talkie." It is an independent subsystem of the plant communications system.

There are three separate intraplant radio systems each with its own frequency base station and "handie talkie" units. One system is used for security, one for plant maintenance, and one for operations.

9.5.2.2.5 Fiber Optic Communication

The fiber optic communication for Clinton Power Station is carried on fiber contained in Optical Ground Wire and direct-buried fiber cable. This system provides protective relaying between Clinton Power Station and IP's Brokaw substation. The system consists of a digital T1 multiplexor, an optics pack operating at the 1550nm (nm=10^{-9}m) window, and a variety of I/O capabilities which include voice, low-speed data circuits, and four-wire circuits. The system is specifically design for very low signal latency and has been hardened specifically for use in electric switchyards or substations.

9.5.2.2.6 CPS Emergency Field Team Radio System

This radio system is used primarily to communicate with roving emergency teams exterior to the power plant buildings and also provides a paging capability. The base station for the emergency radio system is in the microwave hut. Control points are in the Technical Support Center and Emergency Operations Facility. For descriptions of other emergency use radio systems, refer to the Emergency Plan Implementing Procedures.

9.5.2.2.7 Personal Communication System

The 900MHz personal communication service system is a cellular phone system using low power base station antennas throughout the Clinton Nuclear Power Station. The main process computer, master control unit and dedicated PBX system are all located in the Service Building LAN room. The low power base stations allow the use of the systems cellular phones in radio exclusion areas. The systems main function is to provide coummunications to operations and maintenance to perform routine activities. The system can be used as a supplemental system to the other communication systems during an emergency event. However, no credit is taken for the availability of this system in an emergency event.

9.5.2.3 Inspection and Testing

The communication systems are in frequent use and are tested, and repaired as needed.

9.5.3 Lighting System

9.5.3.1 General Design

The location and use of plant lighting is listed in Table 9.5-12 attached and is also discussed below:

NORMAL OPERATION

Normally, approximately 92.5% of the plant lighting is provided from regular lighting panels.

Approximately 7.5% of the plant lighting is provided from standby lighting panels.

SAFE SHUTDOWN

In accordance with Appendix R, permanent battery packs are provided for manned workstations and remote manual action locations needed for safe shutdown and the credited access and egress paths thereto due to a fire and/or loss of off-site power. Portable 8-hour battery packs are provided for some one-time remote manual actions and portions of the credited access and egress paths thereto.

EGRESS

Additional lighting is provided from emergency d-c lighting panels. These lights come on only during a failure of regular plant lighting. The standby lighting also remains on during a failure of the regular lighting system. Battery packs are located throughout the plant to provide up to 1.5 hours of lighting for evacuation of personnel on loss of standby lighting power or loss of regular lighting power where no standby lighting is provided.

As indicated in section 9.5.2.2, work stations have been identified at which it may be necessary for plant personnel to communicate with the control room or the emergency shutdown panel during and/or following transients and/or accidents in order to mitigate the consequences of the event and to attain a safe cold plant shutdown.

These workstations are indicated below along with the type of lighting available at each.

Note: a) Standby lighting cabinets (SLC) are fed from 1E MCC's not shed during LOCA except for the Standby Lighting Cabinet #157 feeding the turbine building.

b) Emergency lighting cabinets (ELC) are fed from 1E DC MCCs not shed during LOCA, except for Emergency Lighting Cabinet #162 which is fed from a non-IE DC MCC not tripped during a LOCA. ELC #162 feeds the turbine building area.

c) Regular lighting cabinets (RLC) are fed from non-1E sources and may not be available during a transient or accident.

d) Fixed battery packs are normally two emergency light heads mounted on a 6-V nickel cadmium/lead acid battery with an 8-hour rating. In certain cases, the fixed 6-V nickel cadmium/lead acid battery packs with 8-hour rating are furnished with 1, 2 or 3 remotely mounted emergency lighting heads. These are fed from standby lighting cabinets.

1) Division 1, 2, 3, and 4 battery room
Fluorescent lighting fed from SLC. Fixed battery pack fed from SLC.

2) Division 1, 2, and 4 inverters
Fluorescent lighting fed from RLC.
Division 3 inverter
Fluorescent lighting fed from SLC.

3) Division 1, 2, and 3 1E 4.16-kV switchgear
Fluorescent lighting fed from SLC and RLC. Fixed battery pack fed from SLC.

4) Turbine EHC control cabinet
Fluorescent lighting fed from SLC and RLC.

5) Division 1, 2, and 3 diesel generator bays
Fluorescent lighting fed from SLC. Fixed battery pack fed from SLC

6) RHR and RCIC pump rooms
Mercury vapor lighting fed from SLC and RLC

7) LPCS pump room
Mercury vapor lighting fed from SLC and RLC.

8) HPCS pump room
Mercury vapor lighting fed from SLC and RLC. Fluorescent lighting fed from SLC and RLC.

9) Remote shut down panel
Fluorescent lighting fed from SLC and RLC. Fixed battery pack fed from SLC.

10) Division I and Division II MCR Chiller pathway and equipment lighting.
Fixed 8 hour battery pack lighting fed from LRC.

In addition, suitable sealed-beam battery-powered portable hand lights will be provided for emergency use by the fire brigade and other operations personnel. Eight-hour sealed beam battery powered portable hand lights are provided for one-time remote manual actions and access and egress paths. (Q&R 040.24)

The station lighting system is subdivided into four subsystems according to the power source utilized.

9.5.3.1.1 A-C Normal Station Lighting

This lighting system generally consists of 277-Vac mercury vapor, high pressure sodium vapor (HPS) and fluorescent lighting fixtures. Incandescent fixtures are used over the drywell, fuel pools (except for HPS fixtures on the polar crane) and suppression pools. All normal station lighting fixtures are fed from 480/277 volt regular lighting cabinets. Regular lighting cabinets are supplied a-c power from the plant normal power distribution system.

9.5.3.1.2 A-C Standby Lighting System

The standby lighting system generally consists of 277-volt fixtures, similar to the normal lighting fixtures. The sources of a-c power are the Class 1E power system buses. These lights will provide partial lighting during loss of all offsite power. Standby lighting located in Seismic Category I structures will normally provide partial lighting at all times (including a LOCA condition). Some lighting may be affected by specific events (i.e. fires in certain fire zones). In these events a combination of fixed and/or portable battery pack emergency lights will provide required lighting. See Section 9.5.3.1.4 below.

9.5.3.1.3 Emergency Lighting System

This system consists of incandescent lighting fixtures fed from a 125-Vdc station battery. The system is normally deenergized, except for exit signs, and is automatically energized upon loss of a-c power to the normal system. A test switch is provided on each emergency lighting panel for manual initiation to check auto relays during maintenance.

9.5.3.1.4 Battery Pack Emergency Lighting System

This system consists of fixed self-contained, battery-operated lighting units to provide additional backup lighting to the Emergency Lighting System. The units are normally deenergized and operate automatically upon loss of the normal and/or standby lighting system in the immediate area. The units are painted with high-gloss, brown paint for rapid identification. They are provided with a test switch and status indicating lights. The fixed battery pack emergency lighting system is provided for manual workstations and remote manual action locations needed for safe shutdown and the credited access and egress paths thereto.

Eight-hour sealed beam battery powered portable hand lights are provided for one-time remote manual actions and access and egress paths thereto.

9.5.3.2 Safety Evaluation

A failure analysis has not been provided for the lighting system since this is not a nuclear safety-related system.

9.5.4 Diesel-Generator Fuel Oil Storage and Transfer System

9.5.4.1 Design Bases

Compliance with Regulatory Guide 1.137 is required for those applicants for a Construction Permit docketed after September 15, 1978. The diesel generator fuel oil storage and supply system for the Clinton Power Station was designed using acceptable industry standards and conservative design. The design of the diesel fuel oil system complies with ANSI N195-1976 with the following exceptions and clarifications:

1. ANSI N195-1976 Section 6.3 and Appendix A.

   A duplex strainer is not provided in the transfer pump suction line, but a Y type strainer is provided in the recirculation line. The tank outlet nozzle is 6 inches above the bottom of the tank to prevent sludge from entering the line.

2. ANSI N195-1976 Section 7.5, Paragraph 1.

   A nonsafety-related conical strainer is provided in each fill line. There is a locked closed valve between the strainer and the storage tank to preclude entry of deleterious matter.

3. ANSI N195-1976 Section 8, Paragraph 1d.

   A high level alarm is not provided for the storage tanks. A high level alarm for the storage tank could only be useful when filling the tank. Since there are level indicators which will be monitored during the filling, a high level alarm would not enhance the safety of the system. (Q&R 040.33)

Standards for the diesel fuel oil will be in accordance with ASTM D975 and the CPS Technical Specifications. Impurity and quality limitations are provided in ASTM Standard D975. (Q&R 040.34)

The Diesel Fuel Oil fill lines have a protective coating and an impressed type cathodic protection system, although the cathodic protection system may not meet the requirements of NACE Standard RP-01-69. This is adequate because the fill lines are not required for proper operation of the diesel generator units during post-LOCA maximum load demands. All other equipment in the Diesel Generator Fuel-Oil Storage and Transfer System do meet NACE Standard RP-01-69 requirements.

9.5.4.1.1 Safety Design Bases

a. The minimum onsite storage capacity of the system is sufficient for operating each diesel-generator for 7 days while supplying post-LOCA maximum load demands. This time period is sufficient to put the plant in a safe condition.

b. The system is designed to meet its operational requirements during emergency conditions despite any single active or passive failure of one of its components.

c. Electrical component Designs conform to the IEEE Standards 323 and 344 for Class 1E Electrical Systems. The miscellaneous equipment conforms to the codes and standards given in Table 3.2-1.

d. Systems components are protected against corrosion.

e. The system is of Seismic Category 1 design.

f. The system is protected from damage by tornado or turbine missiles and from flooding due to a pipe break.

g. Additional oil may be obtained from a local distributor before depletion of the 7-day supply.

9.5.4.2 System Description

The diesel-generator fuel oil system, shown in Drawing M05-1036, is divided into three divisions. Each division is independent from the other divisions. Each Division I and II Diesel Generator set has a fuel oil storage tank, a day tank, a transfer pump, two diesel engines, one electric generator, and necessary piping, valves, and instrumentation. The Division III (HPCS) diesel generator set has a fuel oil storage tank, a transfer pump, one diesel engine, one electric generator, and necessary piping, valves, and instrumentation. System component performance data are given in Table 9.5-1.

Storage tanks are of the horizontal type and are located in separate rooms in the basement of the diesel-generator building. Each has a storage capacity sufficient to operate its corresponding diesel-generator set for 7 days while supplying post-LOCA maximum electrical load demands. Each is provided with a flame arrester which prevents the ignition of flammable vapors on one side of the arrester when the other side is exposed to an ignition source. The tanks are internally coated with a corrosion inhibiter. The outside of each tank is covered with prime and finish coats of paint.

The tanks and much of the associated piping in the fuel oil storage and transfer system are not buried, therefore cathodic protection is not required for these items. A small portion of the diesel fuel oil tank filler line is buried outside the diesel generator building. This section of the line is coated and wrapped in accordance with AWWA Standard Specification, C203. The prevailing soil conditions at the site have established the need for cathodic protection, therefore, an impressed-current type cathodic protection system consisting of a d-c power supply, control cabinet, and a number of distributed anode beds is used. The cathodic protection system does not need to meet the NACE Standard RP-01-69 criteria for the Diesel Fuel Oil filler line.

Underground metallic structures are connected together through the station grounding system to preclude interference corrosion and for safety requirements. The diesel oil storage tanks and day tanks are coated on the inside to minimize corrosion. All interior surfaces are coated with a 4.0 mils thick prime coat of Exxon Chemicals Rust-Ban Ex5704 or equivalent coating system and a 4.0 mils thick finish coat of Exxon Chemicals Rust-Ban Ex5705 or equivalent coating system. The following industry standards were used in the application of the coating:

A. SSPC Paint Application Specification No. 1 "Shop, Field and Maintenance Painting" and

B. SSPC Surface Preparation Specification No. 5 "Blast Cleaning to 'White' Metal". (Q&R 040.29)

The day tanks are of the horizontal type and are located in separate rooms in the diesel-generator building. Each day tank is provided with a flame arrester.

The diesel oil day tanks are located on the same elevation as the diesel generator, per the advice of the diesel generator manufacturer. Locating the diesel oil day tanks at an elevation above the diesel engine fuel injectors imposes a continuous positive pressure head on the injectors. In case of a fuel system leak (isolation valves, injectors, etc.), fuel oil could accumulate in a cylinder and possibly damage the diesel engine on a start attempt. The diesel generator manufacturer provided suitable fuel oil pumps, gear driven from the diesel engine, for pumping fuel from the day tank to the engine based on the location of the day tank. (Q&R 040.35)

Transfer pumps deliver fuel to the day tanks from the storage tanks. They are located in the basement of the diesel-generator building near their storage tanks. Each pump motor is 1.0 horsepower, and is fed from its associated Class 1E motor control center. Each pump has a minimum capacity of 13 gpm. The diesel fuel oil day tanks are maintained filled at all times. To maintain its tank filled each transfer pump is controlled automatically by level controls mounted in the day tank. The fuel transfer pump starts automatically when its diesel-generator is started. An overflow line is provided from the day tank back to the storage tank to provide a closed recirculation loop. A recirculation line containing a Y-type strainer is provided from the discharge of the transfer pump back to its associated storage tank. The strainer is provided to clean up the fuel oil if necessary. A sample tap on the storage tank recirculation line is provided to draw fuel oil from the storage tank for testing. Because the day tanks are always filled, corrosion of these tanks is minimized.

All tanks are located in the diesel-generator building, a seismic Category I structure. The fuel oil storage tanks are surrounded on three sides by 3-hour fire walls. Each tank is provided with an automatic wet pipe fire suppression system. The connecting diesel oil piping is physically separated from all hot surfaces or other potential ignition sources within the diesel-generator. The day tanks are located within 1.9-hour fire barriers, which are in turn enclosed by 3-hour rated walls of the diesel-generator rooms.

One fuel oil pump is supplied with and located on each diesel engine. These pumps are driven by the diesel engines. They are used to supply fuel from the day tanks to the diesel engine fuel injectors. During startup of the diesel-generators, the motor driven fuel oil injector pumps, which are in parallel with the DC fuel oil pumps, transfer fuel from the day tanks to the fuel injectors. During startup of the diesel-generators, the DC motor-driven fuel oil injector pumps, which are in parallel with the diesel engine-driven fuel oil injector pumps, transfer fuel from the day tanks to the fuel injectors. Each fuel oil injector pump motor is 3/4 horsepower 125 Vdc and is fed from its respective Class 1E d-c power source. The fuel pumps draw more fuel oil from the day tank than is consumed by the engine. The excess fuel is returned to the day tank by a separate return line. The transfer pump transfers more fuel oil to the day tank than the fuel pump draws out. The excess fuel is returned to the storage tank through a separate overflow line. The day tank is located above the suction elevation of the fuel oil injector pumps to assure a slight positive suction head.

The diesel fuel oil is grade No. 2 per ASTM - D975.

The diesel fuel oil storage and transfer system conforms to Regulatory Guide 1.137 and ANSI N195 with exceptions as discussed in Section 1.8.

9.5.4.3 Safety Evaluation

The diesel-generator fuel oil system is designed such that a failure of any one component is no worse than the loss of fuel supply to only one diesel-generator. The loss of one diesel generator and its associated load group will not prevent safe shutdown of the unit (see Subsection 8.3.1.2.1). Therefore, the failure of any one component of the diesel-generator fuel oil system does not preclude the safe shutdown of the plant following a loss-of-coolant accident and loss of offsite power. A component failure analysis of the diesel-generator fuel oil system is given in Table 9.5-2.

Each fuel oil division is completely independent. There are no common components or cross connections between the divisions or units. Therefore, a failure in one division will not propagate to the other divisions.

Each diesel-generator set has a storage tank with a minimum of 7 days capacity. The onsite fuel capacity lasts longer than the time it takes to obtain additional fuel by truck delivery from fuel suppliers.

To maintain a seven day storage capacity, the storage tank level will be kept above the "seven day capability" required level and will be kept as near the top as practical. When replenishing the tank, diesel oil enters through a perforated standpipe which is closed at the bottom. This will ensure the diesel fuel oil enters at low velocities and at directions which will not cause any sediment at the bottom of the tank to be disturbed.

Each storage tank has a drain at the bottom to remove water. Biocides are added to the stored fuel oil as required. The biocides and periodic water drainage will prevent the growth of algae and fungi and accumulation of sludge in the storage tanks.

The storage tank outlet extends 6 inches into the tank from the bottom to prevent sediment transfer to the day tank.

Each fuel storage tank is provided with a fill line and vent line. The fill line enters the top of the storage tank and is routed to the outside of the diesel-generator building. The outside portion of the fill line is protected from missiles. Due to its elevation above the storage tank, damage to the fill line will not cause drainage of the storage tank. The fill line is sealed with a blind flange to prevent the entry of moisture or other foreign matter.

The fuel oil storage fill stations are located in a pit beneath finish grade elevation, as a measure of protection from tornado missiles, and 2 feet outside the external wall of the diesel generator building. A drain is provided in the pit to prevent the accumulation of water. The fill lines run below grade from the fill stations to their respective diesel-generator building wall penetration. The diesel fuel oil fill lines are sealed by a blind flange between refilling of the diesel fuel oil storage tanks. This feature will preclude water from entering during adverse environmental conditions. The fill and vent lines at elevation 736 feet are well above the 100-year flood level of 697 feet.

Vent lines extend from the top of the storage and day tanks to the outside of the diesel-generator building. Complete plugging or crimping of a vent line is not considered a credible event. However, if a vent line was plugged, the result would be no worse than the loss of one diesel-generator set. The loss of one diesel-generator set will not prevent the safe shutdown of the unit. The vent lines are separated such that no single accident could possibly completely plug more than one storage tank vent line.

Each vent line is designed to seismic Category 1, Class C requirements. The storage tank vents are well separated (14 feet minimum between vents). The separation between storage tanks and the day tank vents within the same division have a minimum 2 foot separation. The design of the diesel fuel oil system is such that the fuel oil supply to a given diesel generator will not be adversely affected by the plugging of the associated day tank vent. The day tank and storage tank vents protrude approximately one (1) foot outside the diesel-generator building wall penetrations at a height of at least 8 feet above grade. The vents are protected on one side by the Unit 1 fuel building projection, preventing missile approach from the west. In the unlikely event that tornado missiles damage these lines, alternate means are available to vent the diesel oil storage tanks through the use of existing blind flanged tank nozzles.

A strainer in each inlet line to the diesel-generator skid and a duplex filter between the fuel pumps and the engine are provided to remove particulates which could hamper engine operation. To further purify the fuel oil, each injector assembly contains two strainers, one in the inlet and one in the return line to the day tank. Maintaining the day tank filled at all times will also minimize the accumulation of any appreciable amount of water.

In the event of a failure in one of the supply trains, the associated day tank low level alarm annunciates in the control room. The remaining fuel oil in the tank will provide approximately 60 minutes of full load operation. A break in the fuel oil transfer line, from the transfer pump to the day tank, is also detected by a low level in the day tank.

The fuel oil system is designed to withstand adverse environmental conditions such as earthquakes, tornadoes, and floods. Protection against earthquake damage is assured by the Seismic Category I design of the system. Protection from tornadoes is provided by locating system components within the Seismic Category I diesel-generator building. Protection against flooding is discussed in Section 3.4 and Attachment D3.6. The fuel oil storage tanks are surrounded on three sides by 3-hour fire walls. The south wall is not fire rated. Refer to Appendix E, Section 3.5, for details. The day tanks are located within 1.9-hour fire barriers, which are in turn enclosed by 3-hour rated walls of the diesel generator room. Additionally, both the storage tank and day tank are protected by automatic wet pipe sprinkler systems. The system has been evaluated for consequences of moderate energy line breaks in accordance with the guidelines as given in Section 3.6.

The moderate energy lines located within the diesel generator rooms are given in Table 9.5-9. There are no high energy lines present in the diesel generator rooms.

Electrical equipment and instrumentation are designed to remain functional when exposed to water spray associated with a moderate energy break. Protection from flooding is described in Section 3.6.

Each diesel generator set is housed in a separate room and no single high or moderate line passes through more than a single room. (Q&R 040.32)

All storage and day tanks are located at a sufficient distance from the plant control room to preclude any danger to control room personnel or equipment resulting from an oil tank explosion and/or fire.

9.5.4.4 Tests and Inspections

The fuel oil system is designed to permit periodic testing and inspection of all components.

The system operability is demonstrated during the regularly scheduled tests of the diesel-generators. The frequency of these tests is given in the Technical Specifications. The system was hydrostatically tested prior to initial startup. At least once every 10 years a pressure test of those portions of the diesel fuel oil system designed to Section III, Subsection ND of the ASME Code in accordance with ASME Code Section II, Article IWD-5000 is performed. The fuel oil is sampled and analyzed periodically to verify that its quality meets the diesel manufacturer's recommendations, the requirements of ASTM-D975 and the CPS Technical Specifications.

The methods and tests specified in ASTM-D975 will be followed when there are differences between ASTM-D975 and the diesel manufacturer's recommendations. However, all the diesel manufacturer's recommended limits will be met when they are relevant to the test methods specified in ASTM-D975.

Monitoring of the fuel oil system for each diesel engine is accomplished by a pressure gauge mounted in the engine gauge panel that measures inlet fuel pressure, and a differential pressure switch used to initiate a local alarm and as an input to the common trouble alarm in the Main Control Room. Each alarm will have a unique alarm response procedure and the procedures were available for NRC review prior to fuel load.

The capacity of the day tanks is at least 693 gallons each. The useable capacities of the fuel oil storage tanks are at least 53,680 gallons each for the Division I and II diesel-generator sets and at least 35,785 gallons for the Division III diesel-generator.

9.5.4.5 Instrumentation Application

Each diesel-generator fuel oil system is equipped with adequate instrumentation and controls to provide automatic supply of fuel oil to the diesel engines and to verify system performance. A detailed description of the instrumentation for the system is discussed in Section 7.3.

9.5.5 Diesel-Generator Cooling Water System

9.5.5.1 Safety Design Bases

a. The diesel-generator cooling water system (DGWS) is capable of removing sufficient heat to allow continuous operation of the diesel engine at maximum load. Heat removed by the DGWS is transferred to the shutdown service water system (see Subsection 9.2.1).

b. The system has the capability of providing heat to the engine to maintain it in a keep-warm standby condition.

c. The cooling water system for each diesel-generator is of Seismic Category I design and is housed in a separate tornado-missile-proof, flood protected, Seismic Category I structure.

d. The system is designed to prevent corrosion that may degrade its performance.

e. The system is designed so that a single-failure of any active or passive component, assuming a loss of offsite power, cannot result in the loss of more than one diesel-generator train.

f. The system has sufficient separation from the other divisions to protect it from internally generated missiles and from pipe whip and jet impingement caused by cracks or breaks in high-and moderate-energy piping.

9.5.5.2 System Description

The diesel-generator cooling water system shown in Drawing M05-1035, Sheets 4 through 8 consists of the following components and the associated piping, valves, and controls:

a. cooling water pumps;

b. cooling water expansion tank;

c. cooling water heat exchanger;

d. cooling water immersion heater;

e. aspirators, and

f. lube oil cooler.

Independent DGWS's are provided for Division I, II, and III diesel-generators. Table 9.5-3 gives the applicable data for the above components. The codes and standards applicable to these components are given in Table 3.2-1.

The Division I, II and III cooling system is a closed system with an expansion tank. Makeup to the tank is manually initiated and is supplied from the demineralized water system. Each diesel engine closed cooling water system (DGWS) contains an immersion heater, expansion tank, temperature regulating valve, and lube oil cooler. The immersion heater is thermostatically controlled and, in conjunction with the temperature regulating valve, will maintain the jacket water at a steady temperature. Each immersion heater is 15 kW, 460 Vac, 3 phase, 60 hertz and is fed from its associated Class 1E motor control center. During the engine shutdown condition, jacket water heated by the immersion heater will circulate through the lube oil cooler by thermosyphon action (natural circulation) to warm the lubricating oil which is circulated by an a-c motor-driven pump. This "keep warm" feature will allow the engine the capability of a quick start and reliable load acceptance. The engine low-temperature alarm, which would indicate low lube oil temperature, is annunciated in the main control room via the respective DG Trouble alarm.

Detailed information on integral parts of the diesel generator cooling water system has been supplied by the diesel engine manufacturer. The engine manufacturer has designed the total

cooling system, including these components, for adequate cooling under all conditions of operation, including overload. Table 9.5-3 provides diesel generator cooling water system component data.

The heat exchanger on the diesel generator skid is designed to maintain an engine cooling water temperature of 190°F at full load at any ambient environment temperature. At design flow conditions, ten percent of the tubes on Division I and II and nine percent of the tubes on Division III could be plugged without adversely affecting the cooling capability of the cooling water heat exchanger. With flows above design flow additional tube plugging is possible. The heat exchanger is sized, when clean, to provide more than twice the required heat transfer rate to keep the engine cooled.

The turbocharger aftercoolers are water-to-air heat exchangers. Their purpose is to increase the combustion air density and improve fuel economy. In the event of tube failure, it is anticipated that the tube would be repaired, rather than plugged, or a substitute core be installed.

The lube oil cooler is of the fin-tube type construction, with the cooling water inside the tubes and the oil flowing over the tubes and fins. Two percent of the tubes could be plugged, with no more than four adjacent tubes plugged, without adversely affecting heat exchanger efficiency. (Q&R 040.40)

The DGWS provides cooling water to the diesel engine, lube oil heat exchanger, and turbocharger aftercoolers. It rejects accumulated heat to the shutdown service water system. Each Division I, II and III diesel engine is provided with two gear driven cooling water pumps.

The Division I, II and III DGWS's provide a sufficient heat sink to permit the diesel engines to start and operate for 30 seconds without shutdown service water (SSW) flow through the diesel generator heat exchangers. SSW flow through the Division I and II DGWS heat exchangers begins approximately 10 seconds after the generator supplies power to the bus. There is no delay timer for the Division III SSW pump breaker. Power is supplied to the bus 12 seconds after the standby diesel-generator start signal. The DGWS is vented to ensure that the entire system is filled with water.

The Diesel Generator Cooling Water system has a built in provision to assure all components and piping are completely filled with water by having two system high point vents, one coming off the manifold, and the other coming off the water side of the lube oil cooler. These high point vents are attached directly to the cooling water expansion tank to maintain the closed system. In addition there is a low positive pressure in the system from the engine driven water circulating pump, which helps drive out any entrapped air in the system. The manufacturer has demonstrated through long and extensive use of these engines, in both stationary power plants, and in locomotives, the success of this type of system.

The high-point vents are of adequate size upon startup to remove air in the crossover manifold, above the expansion tank, to prevent the air from reaching the circulating pumps and causing binding.

Upon a cold start, if any air is pushed out of the manifold, before it can be vented to the expansion tank, it will travel to the top of the lube oil cooler where a second vent line will vent to the expansion tank. The design of the cooler and its mounting configuration results in the air

bubble being unable to travel to the discharge of the cooler and ultimately to the cooling water pumps.

In the unlikely event that the crossover manifold develops an air pocket prior to a hot restart, and the water thermostat is now open, any air not vented from the manifold will travel through the cooling water heat exchanger, before entering the lube oil heat exchanger. Air entrapment in the cooling water heat exchanger is not possible due to its design and mounting configuration. Baffles, which support the tubes, are not attached to the shell side of the exchanger, but are part of the tube bundle. The exchanger is laid horizontally, with the water intake and discharge on opposite ends. Once the bubble clears the exchanger it would travel directly to the lube oil heat exchanger, whose venting is described above.

Total water thermostat failure upon startup would require nine individual thermostat element failures of the 16-cylinder and four on the 12-cylinder engines. Failure of one or more elements would cause the engine to exhibit higher water temperatures than normal. Monthly engine testing allows the determination of possible thermostat failure. Maintenance of the thermostat will be done in accordance with GM-EMD recommendations. (Q&R 040.44)

The DGWS is treated, as appropriate, to preclude long term corrosion and organic fouling. Because of the potential environmental consequences involved with chromates, a nitrite type inhibitor is used in all DGWS. Demineralized water is used for makeup to the cooling water system. The nitrite additives are compatible with the carbon steel material construction of the cooling water system for the diesels. The water chemistry complies with generally accepted water quality standards of the industry. (Q&R 040.42)

There is no coolant loss under normal conditions. Should a minor leak occur, make-up water can be added, if the level in the expansion tank sight glass indicates the necessity, while the system is in operation. The expansion tank cap is vented and can be removed during operation of the diesel generator. Although the cooling water system is normally pressurized during operation, the level in the expansion tank will not change when the cap is removed and the coolant will continue to circulate through the system components. This condition has been verified by test during operation of the diesel generators. The vent lines from the crossover manifold and the lube oil heat exchanger to the expansion tank are orificed to prevent excessive amounts of pressurized water from entering the tank while the cap is off and will therefore allow adequate refilling time.

Additionally, a low expansion tank level alarm is provided locally on the diesel generator control panel. Detection of system leakage is accomplished by increased frequency of low expansion tank level annunciations. A diesel generator room common trouble alarm annunciates in the control room in the event of a system malfunction. During emergency and standby operation of the diesel generators, operations personnel will be stationed in the diesel generator building to monitor and service the diesel generators. (Q&R 040.46)

During periods of local DG operation, operations personnel are stationed in the DG room. During non-emergency operation of the diesel generators, operations personnel are stationed in the DG room until diesel temperatures have stabilized, after which a tour of the room is made at least once per hour while the diesel is running. During emergency operation of the diesel generators, if conditions permit, operations personnel are stationed in the DG room until diesel temperatures have stabilized, after which a tour of the room is made at least once per hour while the diesel is running.

HVAC system availability eliminates the need to use ethylene glycol in the cooling water system. Failure of the HVAC system to maintain a minimum room air temperature of approximately 65°F is alarmed in the main control room.

9.5.5.3 Safety Evaluation

Each diesel-generator cooling water system (DGWS) is designed to meet Seismic Category I requirements and is housed in a Seismic Category I structure. The system is designed so that failure of any component will result in the loss of cooling water supply to only one diesel-generator. There are no interconnections between the diesel-generators. The loss of one diesel-generator and its associated load group will not prevent safe shutdown of the reactor (see Subsection 8.3.1). Therefore, failure of any one component of the cooling water system will not preclude safe shutdown of the plant following a loss-of-coolant accident and loss-of-offsite power.

A failure analysis of the Division I and II DGWS is given in Table 9.5-8.

9.5.5.4 Tests and Inspections

The DGWS is designed to permit periodic testing and inspection of all components.

System operability is demonstrated during the regularly scheduled tests of the diesel-generators. The frequency of these tests is given in the Technical Specifications. The system was hydrostatically tested prior to initial engine operation. The cooling water will be sampled and analyzed monthly to verify that its quality meets the diesel manufacturer's recommendations. (Q&R 040.41)

9.5.5.5 Instrumentation Application

Instrumentation for each diesel-generator cooling water system consists of two locally mounted temperature switches in the engine outlet line and for Divisions 1 and 2, one pressure switch in the discharge line of the Jacket Water pumps. The first temperature switch is used to alarm on the local control panel in the event of high coolant temperature. The second switch is used to automatically shutdown the engine in the event of high-high coolant temperature. This trip is bypassed on a LOCA start signal. The pressure switch is used as a cranking lockout switch to prevent engine starter motors from engaging while the engine is rotating. An alarm indicating a diesel-generator problem actuates in the main control room if any of the alarms on the local panel annunciate.

Additional information in regard to the Division 3 diesel engine cooling water system is provided in GE Report NEDO-10905. Drawing M05-1035, Sheets 4 through 8 show the DG cooling system. Table 9.5-13 provides a listing of diesel engine instrumentation, including diesel engine cooling water. (Q&R 040.43)

9.5.6 Diesel-Generator Starting Systems

9.5.6.1 Design Bases

9.5.6.1.1 Safety Design Bases

a. The diesel-generator starting systems for the Divisions I, II, and III diesel engines are independent and redundant for each division. Each diesel generator starting system consists of two full capacity air starting subsystems. Each subsystem has a rated capacity capable of starting its respective engine set five times without recharging the associated air receiver. The rated air capacity of each subsystem is 93 $ft.^3$ at 250 psig for the Division I and II DGs and 64 $ft.^3$ at 240 psig for the Division III DG. All three DGs are capable of multiple successive starts without recharging the air receiver tank when the air receiver pressure is below the rated air pressure but above 200 psig.

b. The starting system initiates an engine start so that within 12 seconds after receipt of the start signal the diesel-generator is operating at rated speed, voltage, and frequency.

c. A failure of a single active or passive component for one division will not prevent another division from performing its intended function.

d. The portions of the starting system essential to the starting of a diesel engine are of Seismic Category I design. The entire diesel-generator starting system is housed in a Seismic Category I structure capable of protecting it from extreme natural phenomena, missiles, and the effects of pipe whip, jet impingement and water spray from high- and moderate-energy pipe breaks (Sections 3.5 and 3.6).

9.5.6.2 System Description

The starting system for the diesel-generators is shown in Drawing M05-1035, Sheets 1 through 3 and consists of the following components and associated piping, valves, and controls:

a. air compressors,

b. air dryers,

c. air receivers, and

d. air motors

Table 9.5-4 contains the applicable data for these components. A starting system consisting of two full capacity subsystems is provided for each of the Division I and II diesels. For the Division III diesel, two air supply subsystems are provided for the single diesel engine. Each subsystem contains one air receiver connected to one starting air motor train. The two air receivers for each unit are charged by an individual compressor associated with that particular air receiver. The compressors for Division 1 & 2 diesel-generators have 20 horsepower electric motor drives. Both Division 3 compressors have 10 horsepower electric motor drives. The motor drive for compressor 1DG03CB is fed from its associated class 1E motor control center. 1DG03CA is fed from a non-safety motor control center. Both compressors on the Division 3 air

start skid operate in response to system pressure switches and start automatically when the system pressure drops to 225 psig, and shut off when the air pressure reaches 240 psig. The four Divisions I and II compressors start automatically when their system pressure drops to 215 psig, and shut off when the air pressure reaches 250 psig. The compressors are connected to a common air dryer, and the air receivers can be charged by either or both compressors. Also the equalization valve may be used to manually equalize the pressure in the air receivers.

Diesel starting air is delivered to the air receiver by the air compressors through desiccant air dryers. Starting air will be dried to a dewpoint of 20°F at the pressure of 250 psig. The performance of the air dryers will be verified periodically. To eliminate the problems of particle carryover, the dryer is equipped with an after filter to trap desiccant carryover and an automatic drain to remove oil and water captured by a coalescing cartridge.

Only two of the four air start motors need to be engaged to the flywheel ring gear of the HPCS diesel engine to start the engine. Only three of the six Division 1 & 2 air start motors need to be engaged to start both engines on a skid. However, all of the air motors are utilized simultaneously to improve starting reliability.

The high-pressure starting air supply is cut off when the engine speed reaches approximately 125 RPM for the Division I and II Diesel Generators, and approximately 150 RPM for the Division III Diesel Generator. The control system will prevent a reengagement of the start motors when the diesel is operating.

The following measures have been taken in the design of the diesel-generator starting systems to preclude the fouling of the air start valve or filter with moisture and contaminants such as oil carryover and rust:

(1) Diesel starting air delivered to the receiver(s) by the air compressors through dessicant air dryers. This precludes moisture from entering the diesel air system.

(2) The three air start systems are completely redundant. Failure of one system will not prevent the other two systems from starting their respective diesel-generators.

(3) Afterfilters are provided in the air dryer system to filter any particulate carryover.

(4) An automatic drain is used in the air dryer system to remove water and compressor oil carryover captured by a coalescing cartridge.

(5) Fouling of the air start valve by oil carryover is precluded by the air lubricator being located downstream of the air start valve.

9.5.6.3 Safety Evaluation

The essential portions of the air starting system are designed to Seismic Category I requirements and the entire starting system is housed inside a Seismic Category I structure. There are no cross connections between the starting air systems of the three diesel-generator units, the loss of one diesel-generator and its associated load group will not prevent safe shutdown of the reactor. A failure modes and effects analysis of the Division I and Division II diesel-generator starting air system is given in Table 9.5-10.

Compressed air for each diesel air-motor subsystem is stored in an individual starting air receiver system. The starting system for each diesel-generator system is comprised of two starting air subsystems. The systems for the Division 1, Division II and HPCS diesel-generators have an air storage capacity when fully charged (i.e., 250 psig for Division 1 and II DG and 240 psig for Division III DG capable of starting the diesel-generator system five times without recharging of the receivers.

The air receivers have drains which may be opened periodically to remove moisture or oil carryover which may have accumulated from the starting air compressors. This minimizes formation of rust within the system. In addition, the system piping for the standby diesel generator is provided with a drip leg to provide for removal of any water which may have accumulated in the lines. The diesel-generator starting air piping system is provided with a strainer before the starting air solenoid valve which removes particulates.

9.5.6.4 Tests and Inspections

The starting system is designed to permit periodic testing and inspection of all components.

The system operability will be demonstrated during the regularly scheduled tests of the diesel-generators. The frequency of these tests is given in the Technical Specifications. The system was hydrostatically tested prior to initial startup.

9.5.6.5 Instrumentation Application

Instrumentation for each diesel-generator starting system consists of two locally mounted pressure switches which monitor the air pressure in the air receivers. One air pressure switch automatically starts the a-c power air compressor when pressure drops to 225 psig for Division III and 215 for Divisions I and II, and stops the compressor when pressure rises to 240 psig for Division III and 250 psig for Divisions I and II. The other pressure switch is used to give a low pressure alarm on the local control panel, and inputs to annunciators in the main control room. If this alarm annunciates and the compressors have not automatically started at the required pressure, they will be manually started from the local control panel.

Additional information in regard-to the Division 3 diesel engine air starting system is provided in NEDO 10905. Drawing M05-1035, Sheets 1 through 3 give the signal flow and list the instruments, sensors, and alarms used in the system. There are no interlocks associated with the diesel engine air start system. Table 9.5-13 provides a listing of diesel engine instrumentation, including the diesel engine air starting system. (Q&R 040.50)

9.5.7 Diesel Engine Lubrication System

9.5.7.1 Safety Design Bases

a. The diesel engines lubrication system provides lubricating oil to all moving parts of the diesel engine during diesel-generator operation.

b. Each lubrication system is of Seismic Category I design and is housed within a separate Seismic Category I structure capable of protecting the system from extreme natural phenomena, missiles, and the effects of pipe whip or jet impingement from high and moderate-energy pipe breaks.

c. The lubrication system is designed such that the failure of a single active or passive component cannot result in the loss of function of more than one diesel-generator.

9.5.7.2 System Description

The diesel engine lube oil cooling system is part of the engine designed by the engine manufacturer. The lube oil is cooled by engine cooling water system which is also a part of the engine designed by the manufacturer. No external cooling is needed for the lube oil system. (Q&R 040.54)

The lubrication system shown in Drawing M05-9035 consists of the following components and the associated piping, valves, filters, strainers, and controls:

a. lube oil pumps;

b. lube oil sump pan; and

c. lube oil heat exchanger.

The lube oil sump for all the diesels is integral with the engine. The lube oil is warmed through the use of the main lube oil heat exchanger and water immersion heater system while in standby.

An independent lubrication system is provided for each diesel engine. The codes and standards applicable to the diesel engine lubrication system are listed in Table 3.2-1.

In addition to providing lubrication, the system rejects the heat to the diesel cooling water system via the lube oil heat exchanger.

The diesel engines are each provided with a main lube oil pump, a lube oil piston cooling pump, a scavenging pump, two turbocharger soak back pumps and two circulation pumps. The main lube oil pump provides oil to the engine bearings, gears and turbocharger, and is in a common casing with the piston cooling pump. All of the pumps, with the exception of the soak back pump and the circulation pump are driven by the diesel engines. The lube oil circulating system utilizes two pumps which operate continuously. The first pump, which is called the turbo soakback oil pump, circulates oil from the engine sump to the auxiliary turbocharger filter and the turbocharger to provide lubrication to the turbocharger bearings, for fast starts, and to remove heat from the bearings after the engine is shut down. There is one such pump on each diesel engine and it is driven by an AC motor fed from its associated class 1E motor control center.

The second pump, which is called the circulating oil pump, circulates oil from the engine sump, through an in-line strainer and a relief check valve, through the full flow oil filter and the oil cooler (where the oil picks up heat from the preheated water, refer to subsection 9.5.5), and then into the engine oil gallery where it flows through the crankshaft bearings. Vent and siphon

break lines are provided at the high points of the system to ensure the system remains full of oil. There is one such pump on each diesel engine and it is driven by an AC motor fed from the same source as its associated turbo soakback AC motor.

Each circulating and turbo soakback oil pump has a DC motor driven pump as a backup. Should the AC motor driven pump fail on loss of AC, the DC motor driven pump automatically energizes utilizing the same flow path as its associated system and will provide the same prelube.

This dual pump system ensures the engine is lubricated and prepared for fast starts under any situation.

The lubrication system is provided with filters and strainers to maintain the required quality of the lube oil during engine operation. The filters are changed and the strainers are cleaned periodically to assure an adequate supply of clean oil to the engine. Crankcase pressure relief devices are provided for venting each diesel engine and to prevent overpressurization of the crankcase resulting in a possible explosion.

9.5.7.3 Safety Evaluation

Each lubrication system is designed to Seismic Category I requirements and is housed inside a Seismic Category I structure. The diesel engine lubrication system is designed such that failure of any one component will not result in the loss of lubricating oil supply to more than one diesel engine. There are no cross connections or common lines between the diesel lubricating systems. The loss of one diesel engine and therefore one D/G system and its associated load group-will not prevent safe shutdown of the unit (see Subsection 8.3.1). Therefore, failure of any one component of the lubrication system will not preclude safe shutdown of the plant following a loss-of-coolant accident and loss-of-offsite power. A failure modes and affects analysis of Division I and Division II diesel-generator lubrication system is given in Table 9.5-11.

The diesel generators include a continuous, recirculating turbocharger lubrication system that operates whenever the diesel is in standby (automatic mode), and will also be in operation during a manual start. There is no need for a separate manual prelube of the turbocharger nor is one provided. Therefore, there is no prelube time interval associated with the turbocharger. There has been no history of oil leakage on the exhaust manifold, or turbocharger housing, from operation of this turbocharger prelube system. The diesels use continuous prelube to ensure that the turbocharger bearings receive adequate lubrication during startup. No procedure direction is necessary for manual operation nor is there any need for establishment of a prelube time frame. (Q&R 040.59)

The entry of foreign matter in to the lubrication system is prevented by providing administratively controlled access into the diesel-generator building. Care will be taken by the operators when performing maintenance or recharging of the lubrication system to prevent entry of deleterious material into the system. (Q&R 040.55)

Each diesel generator is equipped with crankcase overpressurization indication in the form of "crankcase pressure high" alarms, and at least two springloaded explosion relief covers in the engine frame to contain the effects of crank case explosion. In the unlikely event that internal missiles are generated, they would be contained entirely within the engine generator or compressor housing, because the equipment housings are contstructed of heavy steel plates to absorb the impact of any postulated internally generated missiles. Furthermore, in the unlikely event that an internal missile is generated from a diesel generator unit, it would only inflict damage to itself within its own enclosure. Divisional wall doorways are located on opposite ends of consecutive walls. Vessel ruptures would not generate missiles of sufficient energy to allow passage into the adjoining room. There are no other openings in the walls, other than the doorways. The redundant unit which is isolated, would be available, so that the loss of one unit would not render the emergency system inoperable. (Q&R 040.26)

9.5.7.4 Tests and Inspections

The lubrication system is designed to permit testing and inspection of all components. The system operability will be demonstrated during the regularly scheduled tests of the diesel generators. The frequency of these tests is given in the Technical Specifications. The lube oil will be sampled and analyzed once every 3 months to verify that it can still adequately perform its function.

If the oil does not meet manufacturer's recommendations, the oil will be either purified or replaced.

A crankcase pressure detector is provided to detect an overpressure condition in the crankcase. If the crankcase pressure should increase to the alarm setpoint, the high crankcase pressure alarm annunciates. The operator takes the appropriate action to rectify this condition. Engine blow-out panels are also provided.

During the initial startup and periodic testing, the lube oil system was visually checked for leaks. High lube oil temperature, low lube oil level or low lube oil pressure could be partly attributed to lube oil leakage. Excessive oil use may be partly due to oil leakage. This is checked during routine inspection. (Q&R 040.54)

A low point drain on the engine sump will be periodically opened to drain condensation and monitor for excess water contamination during diesel standby periods (Q&R 040.41)

9.5.7.5 Instrumentation Application

The following instrumentation is provided to monitor the lubrication system for each diesel engine. The engine oil pressure is monitored by two pressure switches per engine. The first pressure switch is used to annunciate upon low oil pressure. The second pressure switch is used to trip the engine upon low oil pressure.

The engine sump is monitored by a level switch and a pressure switch. The level switch is used for low oil level alarm. The pressure switch is used for high crankcase pressure alarm. Both alarms are on the local control panel and the common trouble alarm in the main control room.

The Division I and II turbochargers are monitored by a pressure switch which alarms on low oil pressure. This alarm is on the local control panel and the common trouble alarm in the main

control room. The Division III diesel generator is not equipped with a soakback oil pressure alarm switch.

The Division III circulating lube oil system is monitored by a pressure switch which alarms on low oil pressure. This alarm is on the local control panel and the common trouble alarm in the main control room. The Division I and II diesel generators are not equipped with circulating oil pressure alarm switches.

The lube oil filter is equipped with a differential pressure switch. This switch is used for alarm or a clogged oil filter. This alarm is on the local control panel and also has input to the common trouble alarm in the main control room.

Oil is monitored by two temperature switches. One switch is used for low lube oil temperature and the other is used for high lube oil temperature. Both switches alarm on the local control panel and provide input to the common trouble alarm in the main control room.

9.5.8 Diesel-Generator Combustion Air Intake and Exhaust System

9.5.8.1 Design Bases

9.5.8.1.1 Safety Design Bases

a. The diesel-generator combustion air intake and exhaust system is capable of supplying reliable quality air to the diesel engine and exhausting the products of combustion to the atmosphere.

b. With the exception of the exhaust silencers and the exhaust screens, the combustion air intake and exhaust system is of Seismic Category I design. Except for the exhaust silencers and associated piping, the combustion air intake and exhaust system is housed in a separate Seismic Category I structure capable of protecting it from extreme natural phenomena, missiles, and the effects of pipe whip or jet impingement from high-and moderate-energy pipe breaks.

c. The combustion air intake and exhaust system is designed so that the failure of any component will not result in the loss of function of more than one diesel-generator set.

9.5.8.2 System Description

The diesel-generator combustion air intake and exhaust system, shown in Drawing M05-1035, Sheets 1 through 3, consists of the following components and the associated piping and expansion joints:

a. air filter;

b. air silencer; and

c. exhaust silencer.

An independent combustion air intake and exhaust system is provided for each diesel-generator set. The system components are sized and physically arranged such that no degradation of the operation of the engine will occur when the diesel is required to operate continuously at rated output. Table 9.5-6 contains the applicable data for the above components.

The combustion air intake and exhaust system provides filtered ambient air to the diesel engines for combustion and exhausts the products of combustion to the atmosphere. Air for combustion is taken from a missile protected air intake cubicle separate from the diesel-generator room. All air intake and exhaust components, except the exhaust/silencer, are located inside the diesel-generator building for protection from extreme environmental phenomena. The exhaust silencer is not required for diesel operation and is therefore located on the roof of the diesel-generator building. Figure 1.2-3 shows the location of the diesel-generator building with respect to other site components. The locations of missile protection barriers are shown in Figure 3.5-3.

9.5.8.3 Safety Evaluation

Except as noted in Subsection 9.5.8.1.1, item b, each combustion air intake and exhaust system is designed to Seismic Category I requirements and is housed inside a Seismic Category I structure. The system is designed such that failure of any component will result in the loss of function of only one diesel-generator set. The loss of one diesel-generator set and its associated load group will not prevent safe shutdown of the unit (see Subsection 8.3.1). Thus, failure of any one component of the system will not preclude safe shutdown of the plant following a loss-of-coolant accident and loss-of-offsite power.

The air intake is located so that only negligible contamination of the intake air by the exhaust products, other gases including carbon dioxide released from the carbon dioxide fire protection located in the room or dust that may be intentionally or accidentally released on site can occur. Such contamination will not preclude diesel-generator operation at rated output. There is nothing in the vicinity of the air intake which could act as a potential restriction to the inlet air flow.

The diesel-generator air intake and piping is located within the diesel-generator building which affords protection from clogging due to rain, snow, sleet and ice. The air intake disposable fiberglass cell type filters remove airborne dust or other particles and prevent clogging of the air intake line. Additionally, the air intake is provided with "filter clogged" mechanical restriction indicator.

Information concerning the operability of the diesel engine air intake and exhaust systems for Q&R 040.62 follows.

The accidental releases of carbon dioxide from the 5-ton and 6-ton storage tanks located at the Clinton Power Station along the north exterior wall of the radwaste building were evaluated using the instantaneous puff release model given in Regulatory Guide 1.78. The analysis was based on a Pasquill F Stability Class. The effect of the building wake on the plume was considered per Regulatory Guides 1.24 and 1.78. The results indicate that the oxygen (0_2) concentration at the diesel combustion air intake is greater than 18% 0_2 by volume; therefore, the diesel generator will not be "snuffed" in the event of an onsite release of CO_2.

Icing and snow clogging of the diesel generator air intake louvers is not credible due to the 5-3/4 inch spacing between the individual louvers. Recirculation of the diesel generator exhaust

gases during an atmosphere temperature inversion is not credible since the gas high temperature would cause rapid dispersion of the exhaust. Ice and snow clogging of the exhaust silencers is not credible since an open drain is provided to remove moisture from the muffler discharge line. (Q&R 040.62)

The diesel engine exhaust system is located within the diesel generator building, with the exception of the exhaust silencer which is located on the building roof as shown on Drawing M01-1110-1. The exhaust piping downstream of the exhaust silencer is provided with an open drain to relieve condensate which may collect due to rain or melting snow and ice.

The portions of the diesel-generators exhaust pipes located exterior to the missile wall would be exposed to tornado missiles and are not designed to withstand missiles. The spacing of the exhaust lines is greater than the longest credible tornado missile. A tornado missile approaching from the south could only damage a single exhaust line. A tornado missile approaching from the east would strike the first exhaust line and would lose energy or be deflected so that damage to the remaining lines would not be expected. The Control Building and the Containment Building protect the exhaust lines from missiles approaching from the north and west. Damage from a missile could result in deformation or severing of the pipe. Severe deformation of the exhaust pipe could result in a decrease in the operational performance of the corresponding diesel-generator. In case of severe damage, bypass flow paths are provided just outside the missile wall to prevent excessive back pressure which could degrade diesel engine performance.

As described in the Safe Shutdown Analysis, for a fire in any area of the diesel building either the Division 1 diesel generator or the Division 2 diesel generator is required for safe shutdown.

A conservative analysis was performed to show that the products of combustion from a fire in the air intake to a diesel generator would not be drawn into the air intake of the other diesel generator in sufficient quantities to cause snuffing. The results of the analysis, as shown below, indicate that sufficient oxygen (18%) is present in the combustion air to prevent "snuffing" of the diesel generators:

Air Intake with Assumed Fire (Zone)	Oxygen Concentration in Air to Adjacent Diesel (%0_2 by Volume)
D-8	18.0
D-9	19.0

There are no deleterious effects from the initiation of the carbon dioxide fire suppression system in one diesel generator bay upon the adjacent bays or adjacent air intake cubicles. Each diesel generator bay is enclosed within a 3-hour fire rated enclosure. Penetrations are sealed to obtain a 3-hour fire rating. All HVAC duct penetrations have 3 hour fire-rated dampers. (Q&R 040.64)

Each Unit 1 diesel generator is in its own room and is therefore isolated from other diesel generators. During normal plant operation, the diesel generator make-up ventilation system provides filtered air to each diesel generator room. Makeup air is filtered from 45% to 55% based on ASHRAE Standard 52-68.

The Unit 1 diesel generator control panels are also dust-tight and water-resistant in accordance with NEMA 4. (Q&R 040.65)

Refer also to Subsection 3.11.4, item j.

9.5.8.4 Tests and Inspections

The combustion air intake and exhaust system is designed to permit periodic testing and inspection of all components. The system operability will be demonstrated during the regularly scheduled test of the diesel-generator. The frequency of these tests is given in the Technical Specifications.

9.5.8.5 Instrumentation Application

Cylinder exhaust temperatures are monitored by thermocouples located in the exhaust manifold. These thermocouples are read out on a pyrometer mounted on the engine gauge panel which has a selector switch to select individual cylinders for temperature monitoring.

Subsection 9.5.8 describes the functions of the instrumentation and sensors provided for monitoring of the diesel engine combustion air intake and exhaust system. Additional information in regard to the Division 3 diesel engine combustion air intake and exhaust system is provided in NEDO 10905. There are no interlocks associated with the combustion air intake and exhaust system. Drawing M05-1035, Sheets 1 through 3, is the P&ID for the diesel generator starting air, intake, and exhaust subsystems.

The testing necessary to maintain ands assure the proper operation of diesel generator air intake and exhaust is referenced in Subsection 9.5.8.4. Table 9.5-13 provides a listing of diesel engine instrumentation, including the diesel engine combustion air intake and exhaust system. (Q&R 040.61)

9.5.9 Auxiliary Steam System

The auxiliary steam (AS) system is not required to ensure the safe shutdown of the plant. No portion of the system is considered nuclear safety-related. Table 3.6-2 demonstrates that the failure of AS piping will not affect nuclear safety-related piping.

9.5.9.1 Power Generation Design Bases

a. During normal station operation the Auxiliary Steam System operates only to provide steam to the radwaste evaporators. This steam is supplied from main steam, cross around piping extraction steam, or from two auxiliary steam reboilers which receive driving steam from the auxiliary steam electrode boilers.

b. When main steam or extraction steam is not available, such as when the unit is shutdown or the unit is starting up, steam is supplied from two auxiliary steam reboilers.

c. The Auxiliary Steam System is provided with adequate controls and instrumentation to provide operational flexibility because of the large variations in steam demand during the various modes of station operation.

9.5.9.2 System Description

The Auxiliary Steam (AS) System as shown in Drawing M05-1031 consists of two electrode boilers, two reboilers, a deaerator, three boiler feedwater pumps, three radwaste evaporator condensate drain tank pumps, three radwaste evaporator condensate drain tanks, a boiler blowdown tank, a boiler chemical feed system, and the associated piping, valves, controls, and instrumentation. The equipment is located in the Radwaste Building with portions of the piping, valves, and instrumentation located in the Turbine Building. Table 9.5-7 describes the major components of the Auxiliary Steam System.

During normal operation the Auxiliary Steam System supplies steam to any or all of the radwaste evaporators from the auxiliary steam reboilers. This steam is condensed in the evaporator heaters and drained to the radwaste evaporator condensate drain tanks. The condensate is then pumped back to the reboilers, as feedwater, by radwaste evaporator condensate drain tank pumps or the condensate may be returned to the condenser. Make-up feedwater for the reboilers is provided from the Cycled Condensate System described in Subsection 9.2.6.

Driving steam for the reboilers is provided by the electrode boilers. The electrode boiler condensate is drained from the reboilers and passes to the auxiliary steam deaerator where noncondensable gases are removed by continuous venting to the atmospheric vent line of the auxiliary steam blowdown tank.

The feedwater for the electrode boilers is provided from the deaerator with makeup being supplied at the deaerator from the makeup condensate system described in Subsection 9.2.6.

Electrode boiler water quality is maintained by blowdown based on a high conductivity level in the boiler water. Blowdown is sent to the auxiliary steam blowdown tank, which is vented to the atmosphere and drains to either the offgas building floor drain sump or the make-up demineralizer floor drain sump. Trisodium phosphate is used as electrolyte and can be automatically added to boiler water on a signal of low conductivity.

During unit startup or shutdown, auxiliary steam is supplied from the auxiliary steam reboilers. Auxiliary steam may be used during unit startup for condenser deaeration and heating, providing turbine shaft seal steam, and warming for the moisture separator/reheaters and operating radwaste evaporators. During unit shutdown, auxiliary steam may be used for testing the reactor feed pumps, blanketing moisture separator/reheaters and operating radwaste evaporators. Steam blanketing system will only be used as allowed by station procedures. There is no impact on nuclear safety from the use or non-use of the steam blanketing system.

If the unit is operating, main steam or extraction steam may be used to operate the radwaste evaporators. In this mode of operation, the condensed steam is returned to the main condenser.

The radwaste evaporator condensate drain tanks are continuously monitored for high conductivity to detect leakage of radioactive materials into the auxiliary steam system. The drain tanks isolate automatically on high conductivity signals indicating possible leakage of evaporator bottoms into the auxiliary steam system. The operator may then divert the condensate to the floor drain surge tanks for processing by the radwaste system if this action is required.

9.5.9.3 Safety Evaluation

The auxiliary steam system has no nuclear safety-related function as defined in Section 3.2. Failure of this system will not compromise any safety-related system or component and will not prevent safe reactor shutdown.

Overpressure protection is provided for the electrode boilers and the reboilers in accordance with the requirements of ASME Section I and Section VIII. The relief valves on these pieces of equipment discharge to the atmosphere on the roof of the radwaste building.

Overpressure protection by use of relief valves is also supplied for the radwaste evaporators in accordance with ASME Section VIII requirements. These relief valves are provided with discharge arrangements to atmosphere during operation when the main condenser is not available. When nuclear steam is used, the relief valves discharge to the condenser. Interlocks are provided to assure that the relief valves will not discharge to the atmosphere when using main or extraction steam in the radwaste evaporators. The valve arrangement is such that a discharge path is always available for the relief valves.

The system is designed for unattended operation following startup of the electrode boilers.

The auxiliary steam system does not affect safety-related equipment as shown in Table 3.6-2. Failure of the system will not compromise any safety-related systems or prevent safe shutdown of either unit.

9.5.9.4 Test and Inspections

The auxiliary steam system is proved operable by system use during normal plant operation and shutdown.

9.5.9.5 Instrumentation Applications

Electrode boiler operation is controlled by simultaneously controlling boiler water level, outlet steam pressure and electric current to the boiler. Each boiler is in a closed loop with a reboiler, therefore steam demand will vary with demand for outlet steam from the reboiler.

Reboiler steam generation is controlled indirectly by controlling the level of water in the reboiler with a feedwater control valve. Both reboilers contribute to total steam demand. All controls for the system are mounted on a remote panel located in the radwaste building. The system is designed for unattended operation following startup.

TABLE 9.5-1
DIESEL-GENERATOR FUEL OIL SYSTEM COMPONENT DATA

DIESEL-GENERATOR FUEL OIL STORAGE TANKS (DIVISION I AND II)	
Type	Horizontal
Quantity	1 per diesel-generator
Capacity (gal)	54,300
Design pressure	Atmospheric
DIESEL-GENERATOR FUEL OIL STORAGE TANK (DIVISION III)	
Type	Horizontal
Quantity	1
Capacity (gal)	36,300
Design pressure	Atmospheric
DIESEL-GENERATOR FUEL OIL TRANSFER PUMPS	
Type	Rotary screw
Quantity	1 per diesel-generator
Rating (gpm)	13 (minimum)
Pressure (psig)	25
Driver (hp)	1.0
DIESEL-GENERATOR FUEL OIL DAY TANK	
Type	Horizontal
Quantity	1 per diesel-generator
Capacity (gal)	731
Design pressure	Atmospheric

TABLE 9.5-2
FAILURE ANALYSIS OF DIESEL-GENERATOR FUEL OIL SYSTEM

	COMPONENT	MALFUNCTION	COMMENTS AND CONSEQUENCES
1.	Storage Tank	Loss of one tank	There is sufficient capacity in the other two tanks to run the two associated diesel-generator sets for 7 days at maximum demand load. Only two diesel-generator sets are required for a safe shutdown following a loss-of-coolant accident and loss-of-offsite power.
2.	Day Tanks	Loss of one tank	The fuel supply to one diesel-generator set would be lost. However, only two sets are required for a safe shutdown following a loss-of-coolant accident and loss-of-offsite power.
3.	Transfer	Loss of one pump	Same as item 2.
4.	Line between storage tank and day tank	Line fails (rupture of pipe or component)	Same as item 2.
5.	Fill Line	Pipe rupture	Fill lines are located above the storage tanks and enter at the top; therefore, no fuel will be lost. During prolonged operation, refilling of the tanks will be accomplished through a spare nozzle on the storage tank.

TABLE 9.5-3
DIESEL-GENERATOR COOLING WATER SYSTEM COMPONENT DATA

DIVISION I AND II DIESEL-GENERATOR COOLING WATER SYSTEM

a. Jacket Water Pumps

Type	Centrifugal
Quantity	2 per diesel engine (gear-driven)
Engine Coolant Capacity (gal)	12 cyl. 230/16 cyl. 285
Rating (gpm/psig)	12 cyl. 660/50 16 cyl. 850/60

b. Jacket Water Heat Exchanger

Quantity	1 per diesel engine
Type	TEMA AEW

c. Jacket Water Expansion Tank

Quantity	1 per diesel engine
Type	Horizontal
Capacity (gal)	83

d. Jacket Water Immersion Heater

Type	Immersion
Quantity	1 per diesel engine
Output (kw)	15

HPCS DIESEL-GENERATOR COOLING WATER SYSTEM

a. Jacket Water Pumps

Quantity	2 engine driven
Engine Coolant Capacity (gal)	285
Rating (gpm/psig)	850/60

b. Jacket Water Heat Exchanger (Jacket Water Cooler)

Quantity	1
Type	TEMA AEW

TABLE 9.5-3
DIESEL-GENERATOR COOLING WATER SYSTEM COMPONENT DATA (Continued)

c. Jacket Water Expansion Tank

Quantity	1
Type	Horizontal
Capacity (gal)	83

d. Jacket Water Immersion Heater

Quantity	1
Output (kw)	15

TABLE 9.5-4
DIESEL-GENERATORS STARTING AIR SYSTEMS COMPONENTS

STANDBY DIESEL-GENERATOR STARTING SYSTEM (DIVISION I AND II)

a. Air Receivers

Quantity	2 per diesel generator set
Type	Vertical
Capacity (ft^3)	93 each

b. Air Compressors

Quantity	2 per diesel generator (both are motor-driven)
Rating (scfm)	51
Discharge pressure (psi)	250

c. Air Motors

Quantity	3 per engine
Type	Rotary multivane Powr-Quik

HPCS DIESEL-GENERATOR STARTING SYSTEM

a. Air Receivers

Quantity	2
Type	Vertical
Capacity (ft^3)	64 Each

b. Air compressors

Quantity	2 (both are motor-driven)
Capacity (scfm)	22.5
Discharge pressure (psi)	240

c. Air Motors

Quantity	4
Type	Rotary multivane Ingersol Rand

TABLE 9.5-5
Deleted

TABLE 9.5-6
DIESEL-GENERATORS COMBUSTION AIR INTAKE AND EXHAUST SYSTEM COMPONENTS

STANDBY DIESEL-GENERATOR COMBUSTION AIR INTAKE AND EXHAUST SYSTEM (DIVISION I AND II)

a. Intake Air Filter/Silencer

Quantity	1 per diesel engine
Type	Dry type (glass fiber)
Capacity (scfm)	7100 12 cylinder 9040 16 cylinder @ 90° F

b. Exhaust Silencer

Quantity	1 per diesel generator set
Type	Residential
Capacity (scfm)	35,450 @ 790°F

HPCS DIESEL-GENERATOR COMBUSTION AIR INTAKE AND EXHAUST SYSTEM

a. Intake Air Filter/Silencer

Quantity	Multiple
Type	Dry
Capacity (cfm)	9,040 @ 90° F

b. Exhaust Silencer

Quantity	1
Type	Residential
Capacity (cfm)	19,650 @ 745° F

TABLE 9.5-7
AUXILIARY STEAM SYSTEM EQUIPMENT

1. Electrode Boilers (2)

Capacity, lb/hr	48,000 each
Discharge steam pressure, psig	110
Design pressure, psig	150
Power required, kW	13,200

2. Reboilers (2)

Steam output, lb/hr	35,844
Driving steam required, lb/hr	48,000
Steam discharge pressure, psig	80
Design pressure, psig	150

3. Deaerator (1)

Capacity, lb/hr	105,000
Storage tank volume, gal	2,000 at 45 inches
Operating pressure, psig	60
Design pressure, psig	80

4. Electrode Boiler Feedwater Pumps (3)

Capacity, gpm	120
Design Net Developed Head, ft.	283
NPSH required, ft	9.0

5. Radwaste Evaporator Condensate Drain Tank Pumps (3)

Capacity, gpm	77.0
Design Net Developed Heat, ft.	228
NPSH required, ft	4.0

6. Radwaste Evaporator Condensate Drain Tanks (3)

Capacity, gal	500
Normal operating pressure, psig	50
Design pressure, psig	100

7. Blowdown Tank (1)

Capacity, gal	160
Normal operating pressure	Atmospheric
Design pressure, psig	50

TABLE 9.5-8
FAILURE ANALYSIS OF DIESEL GENERATOR
COOLING WATER SYSTEM

COMPONENT	MALFUNCTION	COMMENTS AND CONSEQUENCES
Jacket Water Pump (engine driven)	Loss of pump	Loss of diesel generator. Use redundant diesel generator.
Jacket Water Piping	Rupture of pipe	Loss of diesel generator. Use redundant diesel generator.
Jacket Water Cooler	Loss of cooler	Loss of diesel generator. Use redundant diesel generator.
Jacket Water Heater	Loss of heater	Nonessential component.
Jacket Water Expansion Tank	Loss of tank	Nonessential component.

TABLE 9.5-9
MODERATE ENERGY LINES LOCATED IN THE DIESEL GENERATOR ROOMS

		OPERATING TEMPERATURE (°F)	OPERATING PRESSURE (psig)
A.	Diesel Generator Combustion Air	120	0.2
B.	Diesel Generator Starting Air		
	(1) Divisions I and II	120	250
	(2) Division III	120	250
C.	Diesel Fuel Oil	80	16
D.	Shutdown Service Water	110	120
E.	Carbon Dioxide Fire Protection	104	0
F.	Fire Protection Water	95	130
G.	Diesel Generator Exhaust		
	(1) Divisions I and II	823	5
	(2) Division III	745	5

TABLE 9.5-10
FAILURE ANALYSIS FOR DIVISIONS 1 AND 2
DIESEL GENERATOR STARTING AIR SYSTEM

Component (Each Division)	Malfunction	Comments and Consequences
Starting Air Compressor (2)	Loss of One Compressor	Nonessential component. Use redundant compressor.
Starting Air Receiver (2)	Rupture; Loss of One Tank	Use separate subsystem.
Starting Air Piping (2 subsystems)	Rupture; Loss of One Subsystem	Use separate subsystem.
Starting Air Solenoid Valves (2 subsystems)	One Subsystem Fails to Open	Use separate subsystem.
Starting Air System (1 each Division)	Loss of Entire Starting Air System	Use independent and redundant diesel and its associated Starting Air System.

TABLE 9.5-11
FAILURE ANALYSIS FOR DIVISIONS 1 AND 2
DIESEL GENERATOR LUBRICATION SYSTEM

Component (Each Division)	Malfunction	Comments and Consequences
Circulating Lube Oil Pump	Loss of Pump	Use redundant dc pump
Lube Oil Cooler	Loss of Cooler	Loss of diesel generator. Use redundant diesel generator.
Lube Oil Filter	Filter Clogged	Automatically bypasses Filter-Unit will function.
Lube Oil Piping	Rupture	Loss of diesel generator. Use redundant diesel generator.
Lube Oil Stainer	Strainer Clogged	Loss of diesel generator. Use redundant diesel generator.
Lube Oil Sump Tank	Loss of Tank	Loss of diesel generator. Use redundant diesel generator.
Lube Oil Strainer Sump Tank	Loss of Tank	Loss of diesel generator Use redundant diesel generator.
Scavenging Lube Oil Pump	Loss of Pump	Loss of diesel generator Use redundant diesel generator.
Main and Piston Cooling Lube Oil Pump	Loss of Pump	Loss of diesel generator Use redundant diesel generator.
Turbocharger Lube Oil Filter	Loss of Filter	Loss of diesel generator. Use redundant diesel generator.
Scavenging Oil Pump Strainer	Strainer Clogged	Loss of diesel generator. Use redundant diesel generator.
Turbo-Soak-Back Pump	Loss of Pump	Use redundant dc pump.

TABLE 9.5-12
LIGHTING SYSTEM TABULATION

	NORMAL	STANDBY	EMERGENCY	EMERGENCY BATTERY PACKS
Plant Lighting	Yes	Yes	Yes	Yes
Site Lighting	Yes	No*	No	No
Special Areas:				
Aux. Bldg. - Elect. Swgr.) Rms. El. 781/-0")	Yes	Yes	No	No
Control Bldg.				
Elect. Swgr. Rms.	Yes	Yes	No	No
Main Control Rm.	Yes	Yes	Yes	Yes
Stairs Adjacent to Elevators	Yes	No	Yes	No
Screen House				
SSW Pump Room	Yes	Yes	No	Yes
Fire Pump Room	Yes	No	No	Yes

(Q&R 040.24)

* Security lighting is fed from onsite power.

TABLE 9.5-13
DIESEL ENGINE INSTRUMENTATION
(Q&R 040.43)

Division 1 and 2

Instrument Number	Function	MCR Indication
1PS-DG003A	Air Receiver 1DG04TB Cmpsr Cntl DG 1A Eng A&B	
1PS-DG003B	Air Receiver 1DG04TB Press Lo DG 1A Eng A&B	1H13-P877 via 1PL12JA
1PS-DG004A	Air Receiver 1DG05TA Cmpsr Cntl DG 1B Eng C&D	
1PS-DG004B	Air Receiver 1DG05TA Press Lo DG 1B Eng C&D	1H13-P877 via 1PL12JB
1PS-DG005A	Air Receiver 1DG04TA Cmpsr Cntl DG 1A Eng A&B	
1PS-DG005B	Air Receiver 1DG04TA Press Lo DG 1A Eng A&B	1H13-P877 via 1PL12JA
1PS-DG006A	Air Receiver 1DG05TB Cmpsr Cntl DG 1B Eng C&D	
1PS-DG006B	Air Receiver 1DG05TB Press Lo DG 1B Eng C&D	1H13-P877 via 1PL12JB
1PI-DG034	Starting Air Press DG 1A Eng A	
1PI-DG035	Starting Air Press DG 1A Eng B	
1PI-DG036	Starting Air Press DG 1B Eng C	
1PI-DG037	Starting Air Press DG 1B Eng D	

TABLE 9.5-13
DIESEL ENGINE INSTRUMENTATION (Continued)

Instrument Number	Function	MCR Indication
1PI-DG038	Air Receiver 1DG04TA Press DG 1A Eng A&B	
1PI-DG039	Air Receiver 1DG04TB Press DG 1A Eng A&B	
1PI-DG040	Air Receiver 1DG05TA Press DG 1B Eng C&D	
1PI-DG041	Air Receiver 1DG05TB Press DG 1B Eng C&D	
1PI-DG160	Starting Air Press DG 1A Eng A	
1PI-DG161	Starting Air Press DG 1A Eng B	
1PI-DG162	Starting Air Press DG 1B Eng C	
1PI-DG163	Starting Air Press DG 1B Eng D	
1TS-DG011A	Clg Temp Hi DG 1A Eng B Shutdwn	
1TS-DG011B	Clg Temp Hi DG 1A Eng B	1H13-P877 via 1PL12JA
1TS-DG012A	Clg Temp Hi DG 1A Eng A Shutdwn	
1TS-DG012B	Clg Temp Hi DG 1A Eng A	1H13-P877 via 1PL12JA
1TS-DG013A	Clg Temp Hi DG 1B Eng D Shutdwn	

TABLE 9.5-13
DIESEL ENGINE INSTRUMENTATION (Continued)

Instrument Number	Function	MCR Indication
1TS-DG013B	Clg Temp Hi DG 1B Eng D	1H13-P877 via 1PL12JB
1TS-DG014A	Clg Temp Hi DG 1B Eng C Shutdwn	
1TS-DG014B	Clg Temp Hi DG 1B Eng C	1H13-P877 via 1PL12JB
1TI-DG079	Oil Cooler Sply Temp DG 1A Eng B	
1TI-DG078	Oil Cooler Sply Temp DG 1A Eng A	
1TI-DG081	Oil Cooler Sply Temp DG 1B Eng D	
1TI-DG080	Oil Cooler Sply Temp DG 1B Eng C	
1TI-DG083A	Clg Temp DG 1A Eng B	
1TI-DG083B	Clg Temp DG 1A Eng B	
1TI-DG082A	Clg Temp DG 1A Eng A	
1TI-DG082B	Clg Temp DG 1A Eng A	
1TI-DG085A	Clg Temp Dg 1B Eng D	
1TI-DG085B	Clg Temp DG 1B Eng D	

TABLE 9.5-13
DIESEL ENGINE INSTRUMENTATION (Continued)

Instrument Number	Function	MCR Indication
1TI-DG084A	Clg Temp DG 1B Eng C	
1TI-DG084B	Clg Temp DG 1B Eng C	
1TS-DG087	Immersion Htr DG 1A Eng B	
1TS-DG086	Immersion Htr DG 1A Eng A	
1TS-DG089	Immersion Htr DG 1B Eng D	
1TS-DG088	Immersion Htr DG 1B Eng C	
1PI-DG042	Fuel Sply DG 1A	
1PI-DG043	Fuel Sply DG 1A	
1PI-DG044	Fuel Sply DG 1B	
1PI-DG045	Fuel Sply DG 1B	
1PDS-DG047	Fuel Filter Restricted DG 1A	1H13-P877 via 1PL12JA
1PDS-DG046	Fuel Filter Restricted DG 1A	1H13-P877 via 1PL12JA
1PDS-DG049	Fuel Filter Restricted DG 1B	1H13-P877 via 1PL12JB
1PDS-DG048	Fuel Filter Restricted DG 1B	1H13-P877 via 1PL12JB
1PDS-DG050	Lube Oil Filter Restricted DG 1A	1H13-P877 via 1PL12JA
1PDS-DG051	Lube Oil Filter Restricted DG 1A	1H13-P877 via 1PL12JA

TABLE 9.5-13
DIESEL ENGINE INSTRUMENTATION (Continued)

Instrument Number	Function	MCR Indication
1PDS-DG052	Lube Oil Filter Restricted DG 1B	1H13-P877 via 1PL12JB
1PDS-DG053	Lube Oil Filter Restricted DG 1B	1H13-P877 via 1PL12JB
1LS-DG054	Lo Oil Lvl DG 1A	1H13-P877 via 1PL12JA
1LS-DG055	Lo Oil Lvl DG 1A	1H13-P877 via 1PL12JA
1LS-DG056	Lo Oil Lvl DG 1B	1H13-P877 via 1PL12JB
1LS-DG057	Lo Oil Lvl DG 1B	1H13-P877 via 1PL12JB
1PI-DG058	Oil Press DG 1A	
1PI-DG059	Oil Press DG 1A	
1PI-DG060	Oil Press DG 1B	
1PI-DG061	Oil Press DG 1B	
1PS-DG062A	Lo Oil Press DG 1A	1H13-P877 via 1PL12JA
1PS-DG062B	Lo Oil Press DG 1A	
1PS-DG062C	Cooling Water Pressure Lkout DG 1A	
1PS-DG063A	Hi Oil Press DG 1A	1H13-P877 via 1PL12JA
1PS-DG063B	Hi Oil Press DG 1A	
1PS-DG063C	Cooling Water Pressure Lkout DG 1A	

TABLE 9.5-13
DIESEL ENGINE INSTRUMENTATION (Continued)

Instrument Number	Function	MCR Indication
1PS-DG064A	Lo Oil Press DG 1B	1H13-P877 via 1PL12JB
1PS-DG064B	Lo Oil Press DG 1B	
1PS-DG064C	Cooling Water Pressure Lkout DG 1B	
1PS-DG065A	Hi Oil Press DG 1B	1H13-P877 via 1PL12JB
1PS-DG065B	Hi Oil Press DG 1B	
1PS-DG065C	Cooling Water Pressure Lkout DG 1B	
1TI-DG066	Oil Clr Sply DG 1A	
1TI-DG067	Oil Clr Sply DG 1A	
1TI-DG068	Oil Clr Sply DG 1B	
1TI-DG069	Oil Clr Sply DG 1B	
1TS-DG074A	Oil Temp Lo DG 1A	1H13-P877 via 1PL12JA
1TS-DG074B	Oil Temp Hi DG 1A	1H13-P877 via 1PL12JA
1TS-DG075A	Oil Temp Lo DG 1A	1H13-P877 via 1PL12JA
1TS-DG075B	Oil Temp Hi DG 1A	1H13-P877 via 1PL12JA

TABLE 9.5-13
DIESEL ENGIN INSTRUMENTATION (Continued)

Instrument Number	Function	MCR Indication
1TS-DG076A	Oil Temp Lo DG 1A	1H13-P877 via 1PL12JB
1TS-DG076B	Oil Temp Hi DG 1A	1H13-P877 via 1PL12JB
1TS-DG077A	Oil Temp Lo DG 1B	1H13-P877 via 1PL12JB
1TS-DG077B	Oil Temp Hi DG 1B	1H13-P877 via 1PL12JB
1PS-DG122	Crankcase Press DG 1A	1H13-P877 via 1PL12JA
1PS-DG123	Crankcase Press DG 1A	1H13-P877 via 1PL12JA
1PS-DG124	Crankcase Press DG 1B	1H13-P877 via 1PL12JB
1PS-DG125	Crankcase Press DG 1B	1H13-P877 via 1PL12JB
1PI-DG152	Oil to Filter DG 1A	
1PI-DG153	Oil to Filter DG 1A	
1PI-DG154	Oil to Filter DG 1B	
1PI-DG155	Oil to Filter DG 1B	
1TI-DG156	Oil Clr Dsch DG 1A	
1TI-DG157	Oil Clr Dsch DG 1A	
1TI-DG158	Oil Clr Dsch DG 1B	
1TI-DG159	Oil Clr Dsch DG 1B	
1PS-DG164	Turbo Oil Pmp Press DG 1A	1H13-P877 via 1PL12JA
1PS-DG165	Turbo Oil Pmp Press DG 1A	1H13-P877 via 1PL12JA

TABLE 9.5-13
DIESEL ENGINE INSTRUMENTATION (Continued)

Instrument Number	Function	MCR Indication
1PS-DG166	Turbo Oil Pmp Press DG 1B	1H13-P877 via 1PL12JB
1PS-DG167	Turbo Oil Pmp Press DG 1B	1H13-P877 via 1PL12JB
1SI-DG146	TACH DG 1A	
1SI-DG147	TACH DG 1B	
1TI-DG148	Xhst Temp DG 1A	
1TI-DG149	Xhst Temp DG 1A	
1TI-DG150	Xhst Temp DG 1B	
1TI-DG151	Xhst Temp DG 1B	
1LS-DG285	Lo Water Level DG 1A	
1LS-DG286	Lo Water Level DG 1B	
1LS-DG287	Lo Water Level DG 2A	
1LS-DG288	Lo Water Level DG 2B	
Division 3		
1SS-DG254 (S8)	Overspeed	1E22-S001 & 1H13-P877
1PS-DG192 (S9)	Lo Oil Press	
1PS-DG194 (S10)	Lo Oil Press	1E22-S001 & 1H13-P877
1TS-DG255 (S11)	Hi Water Temp	
1TS-DG256 (S12)	Hi Water Temp	1E22-S001 & 1H13-P877
1PS-DG173 (S13)	Lo Air Press	1E22-S001 & 1H13-P877
1PS-DG179 (S13A)	Lo Air Press	1E22-S001 & 1H13-P877
1TS-DG195 (S14)	Lo Oil Temp	1E22-S001 & 1H13-P877

TABLE 9.5-13
DIESEL ENGINE INSTRUMENTATION (Continued)

Instrument Number	Function	MCR Indication
1LS-DG257 (S16)	Lo Water Level	1E22-S001 & 1H13-P877
1PS-DG193 (S20)	Hi Crankcase Press	1E22-S001 & 1H13-P877
1TS-DG196 (S21)	Hi Oil Temp	1E22-S001 & 1H13-P877
1PS-DG259 (S23A)	Lo Cool Water Press	1E22-S001 & 1H13-P877
1TS-DG260 (S35)	Immersion Heater Cntl	
1PS-DG178 (S38)	Air Cmpsr Cntl	
1PDS-DG185 (S41)	Restricted Fuel Filter	1E22-S001 & 1H13-P877
1PDS-DG200 (S42)	Restricted Lube Oil Filter	1E22-S001 & 1H13-P877
1PS-DG184 (S43)	Fuel Press - Main	1E22-S001 & 1H13-P877
1PS-DG188 (S44)	Fuel Press - Reserve	1E22-S001 & 1H13-P877
1PS-DG172 (S49)	Air Cmpsr Cntl	
1HS-DG293 (S50)	Air Cmpsr Cntl Handswitch	
S52	Engine Heater Cntl Hand-switch	
S53	Air Cmpsr Cntl Handswitch	
1PS-DG199 (S55)	Lo Circ Oil Pump Press	1E22-S001 & 1H13-P877
1SI-DG252 (M15)	Tachometer	
M16	Pyrometer	
1PI-DG302A	1DG01KA 16 Cyl Crankcase Pressure Indicator	
1PI-DG302B	1DG01KB 16 Cyl. Crankcase Pressure Indicator	
1PI-DG302C	1DG01KC 16 Cyl. Crankcase Pressure Indicator	

TABLE 9.5-13
DIESEL ENGINE INSTRUMENTATION (Continued)

Instrument Number	Function	MCR Indication
1PI-DG303A	1DG01KA 12 Cyl. Crankcase Pressure Indicator	
1PI-DG303B	1DG01KB 12 Cyl. Crankcase Pressure Indicator	
1PI-DG304A	1DG01KA 16 Cyl. Water Jacket Pressure Indicator	
1PI-DG304B	1DG01KB 16 Cyl. Water Jacket Pressure Indicator	
1PI-DG304C	1DG01KC 16 Cyl. Water Jacket Pressure Indicator	
1PI-DG305A	1DG01KA 12 Cyl. Water Jacket Pressure Indicator	
1PI-DG305B	1DG01KB 12 Cyl. Water Jacket Pressure Indicator	
1PI-DG306A	1DG01KA 16 Cyl. Airbox Pressure Indicator	
1PI-DG306B	1DG01KB 16 Cyl. Airbox Pressure Indicator	
1PI-DG306C	1DG01KC 16 Cyl. Airbox Pressure Indicator	
1PI-DG307A	1DG01KA 12 Cyl. Airbox Pressure Indicator	
1PI-DG307B	1DG01KB 12 Cyl. Airbox Pressure Indicator	

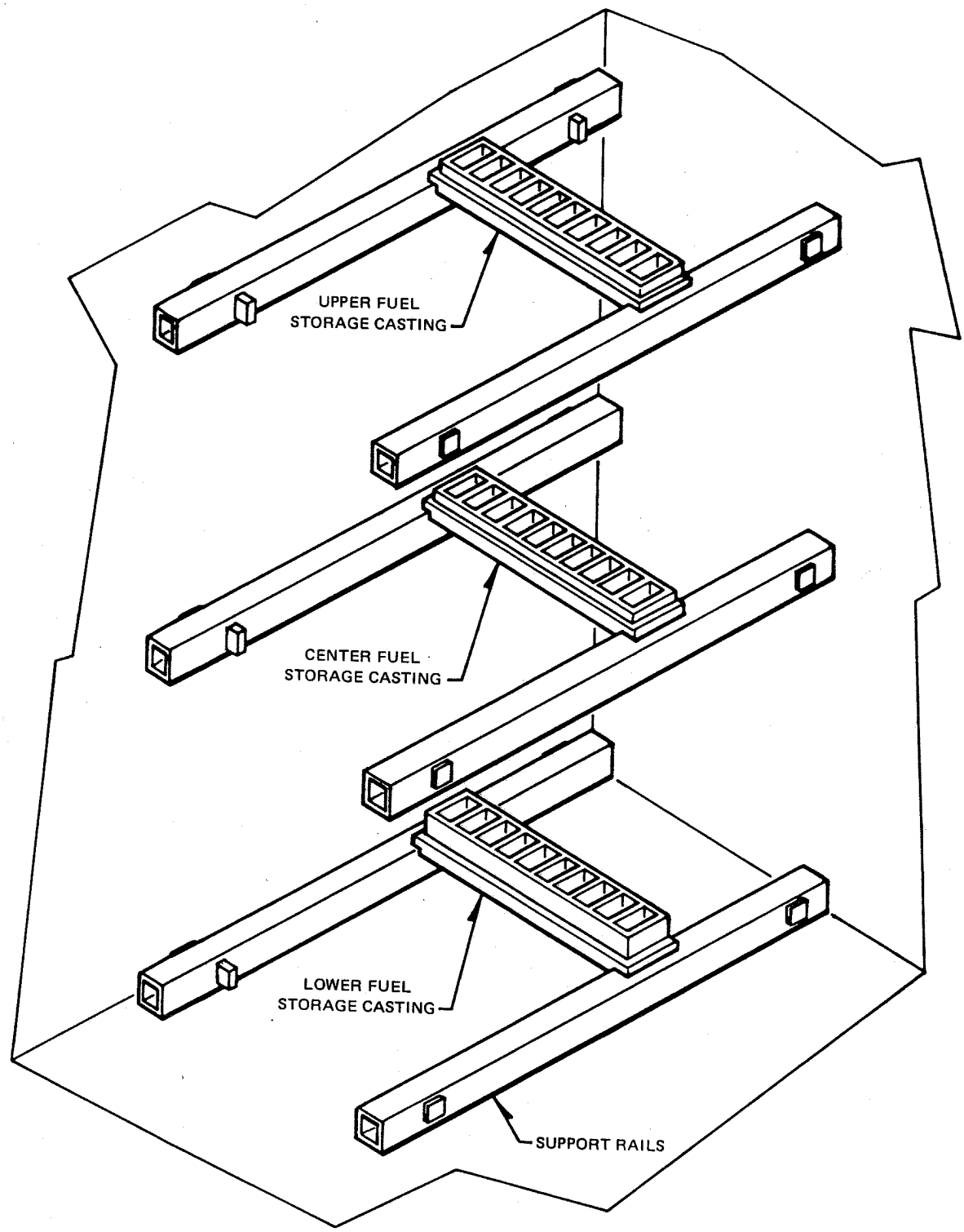

Figure 9.1-1. New Fuel Storage Vault

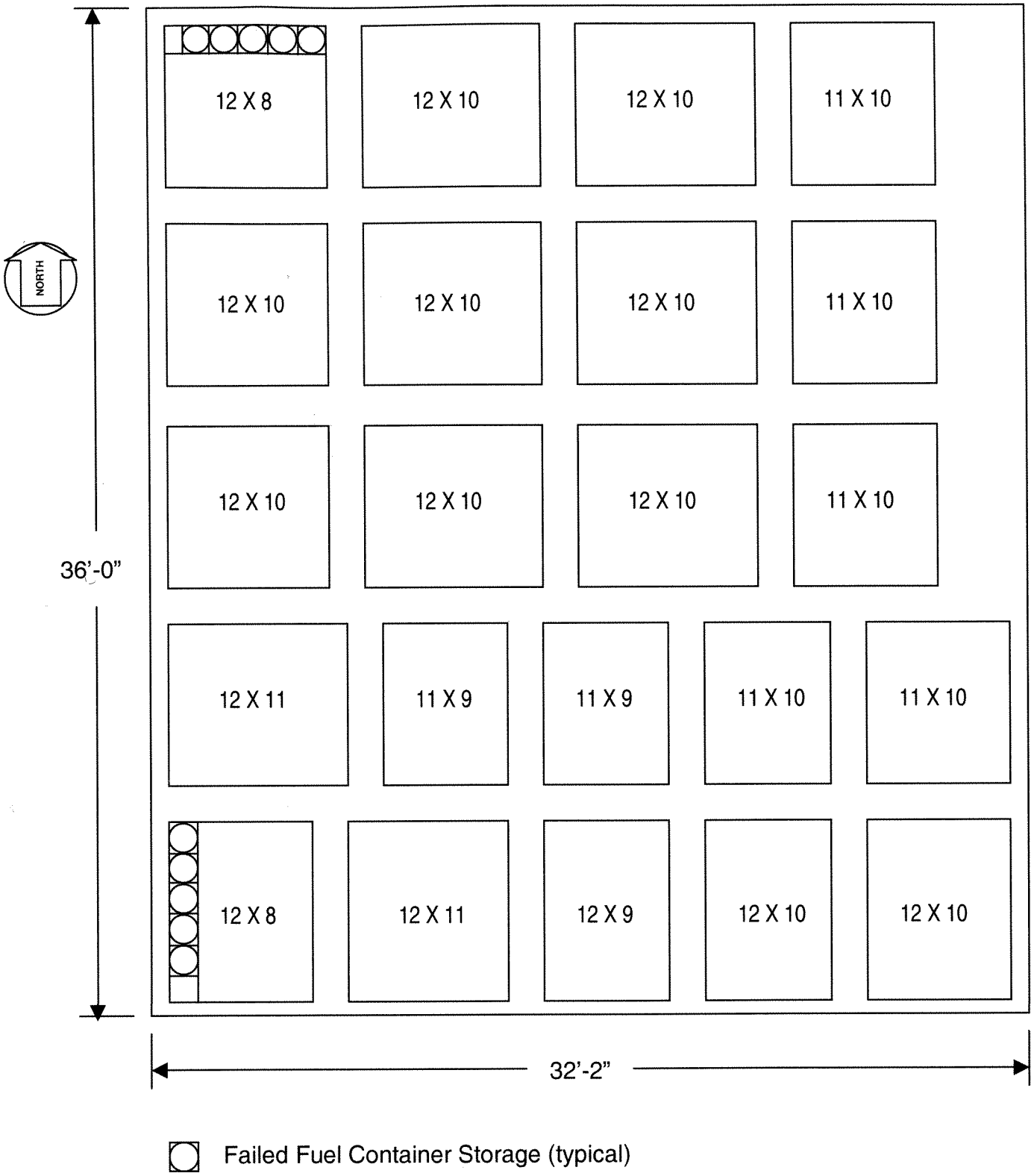

FIGURE 9.1-2a
FUEL STORAGE RACK ARRANGEMENT
FOR THE SPENT FUEL POOL

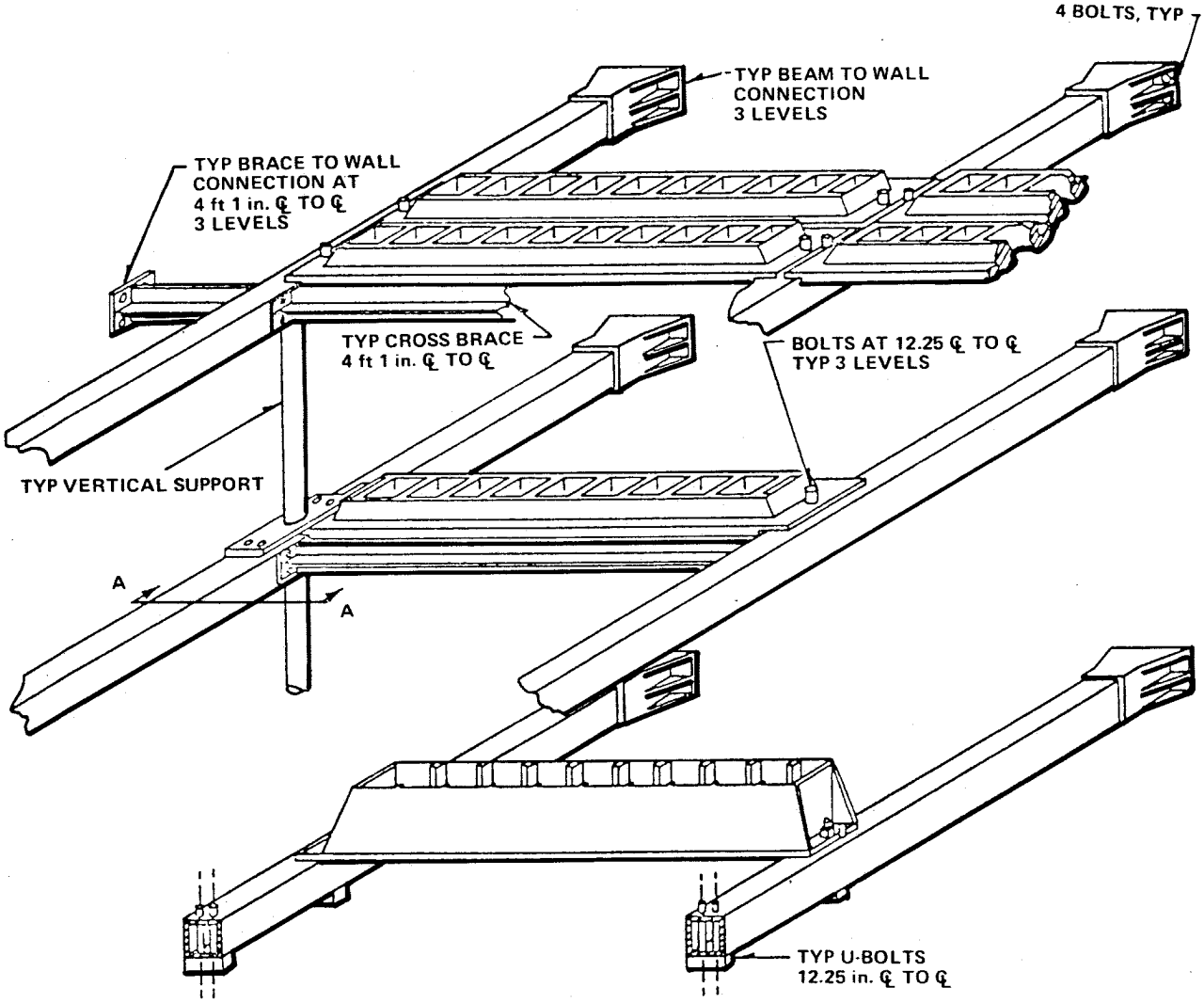

Figure 9.1-2b. Upper Containment Fuel Storage Rack

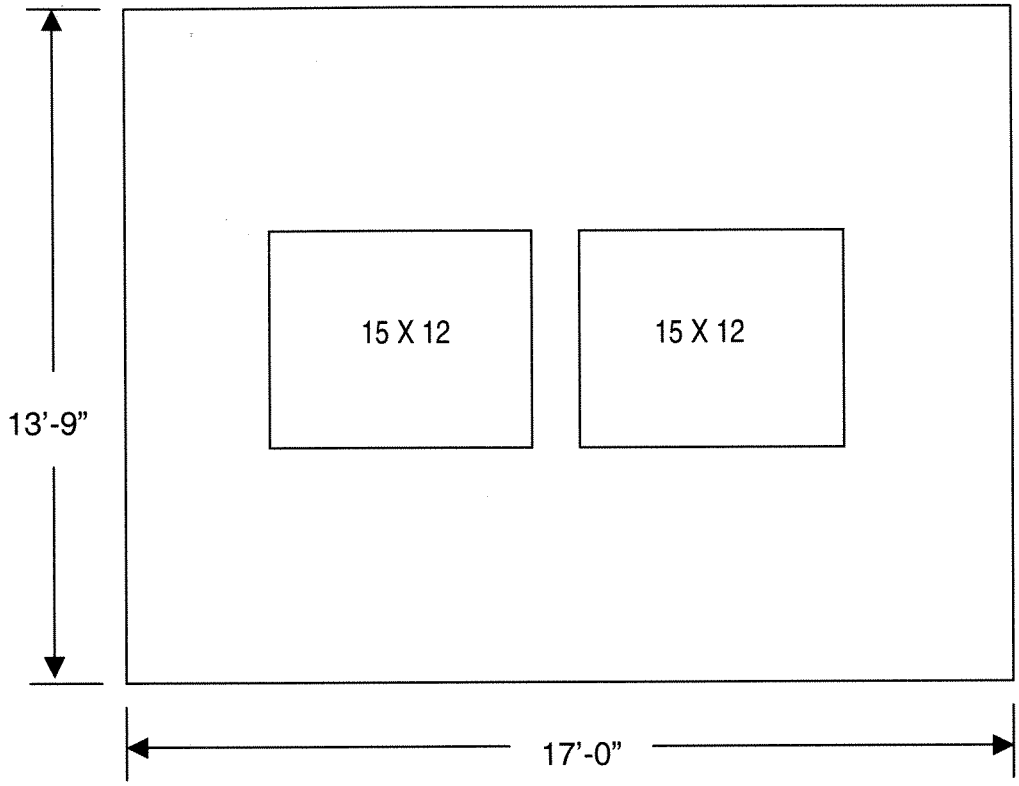

FIGURE 9.1-2c
FUEL STORAGE RACK ARRANGEMENT
FOR THE CASK STORAGE POOL

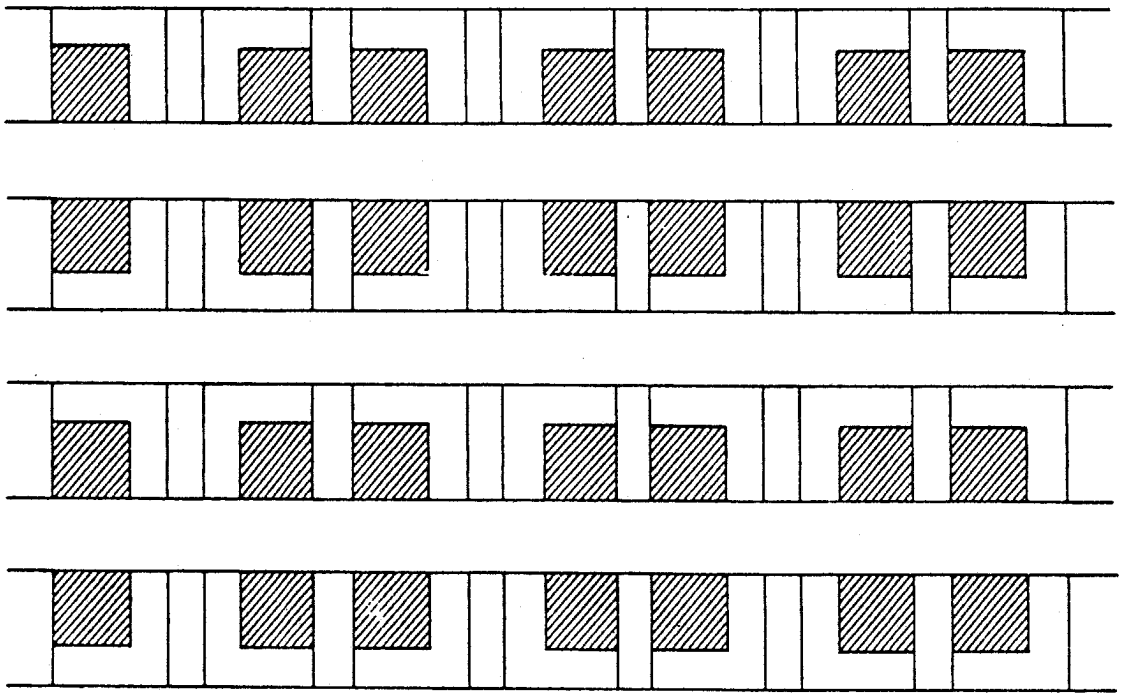

Figure 9.1-3a. Eccentric Fuel Positioning

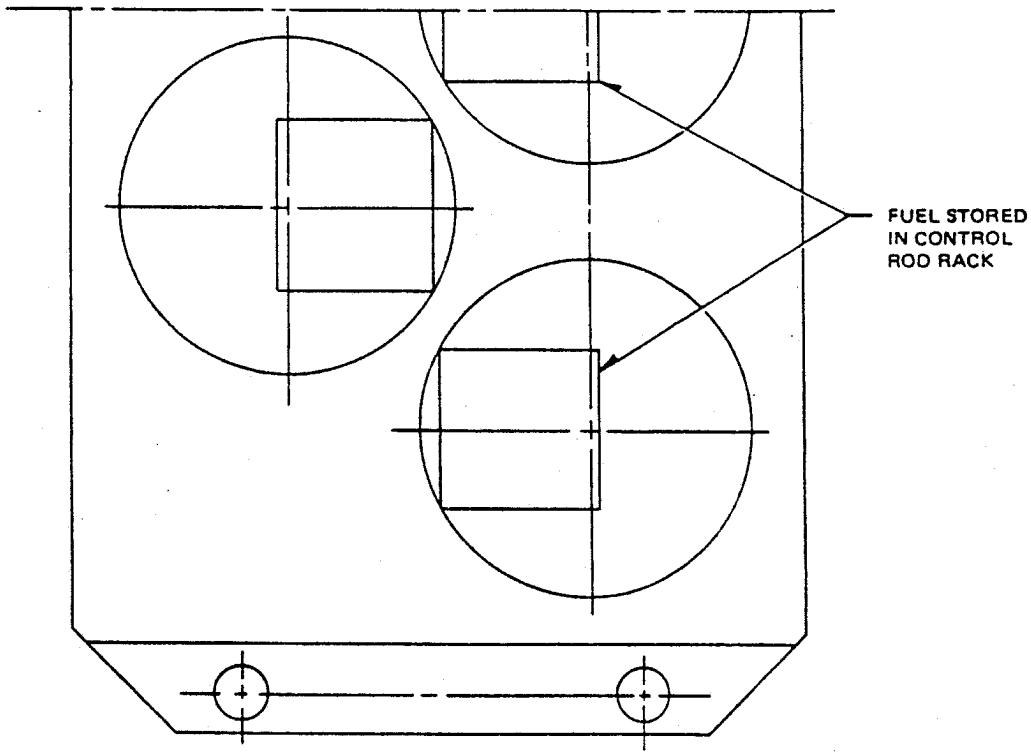

Figure 9.1-3b. Fuel Stored in Control Rod Racks

TWO BUNDLE SIDE-BY-SIDE ARRAY

THREE BUNDLE LINEAR ARRAY

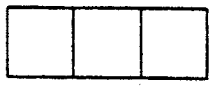

THREE BUNDLE TEE ARRAY

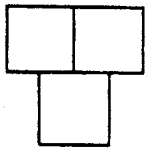

GRAPPLE DROP RESULTING IN
TWO DISPLACED FUEL BUNDLES

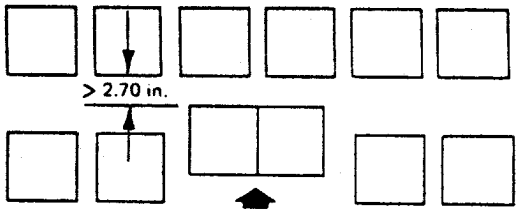

FOUR BUNDLE SQUARE ARRAY

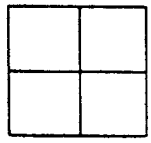

Figure 9.1-3c. Abnormal Fuel Storage Conditions

Figure 9.1-4
Deleted

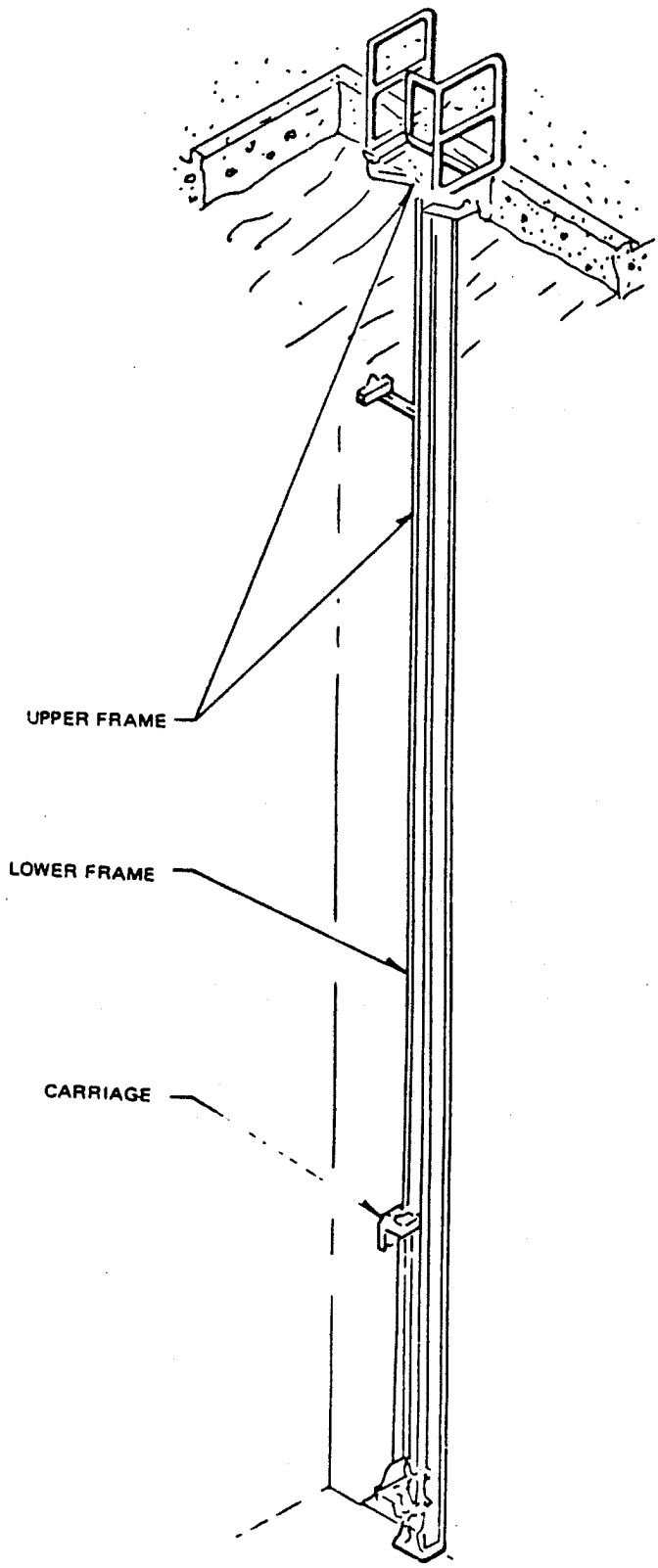

Figure 9.1-5. Fuel Preparation Machine Shown Installed in Fuel Pool

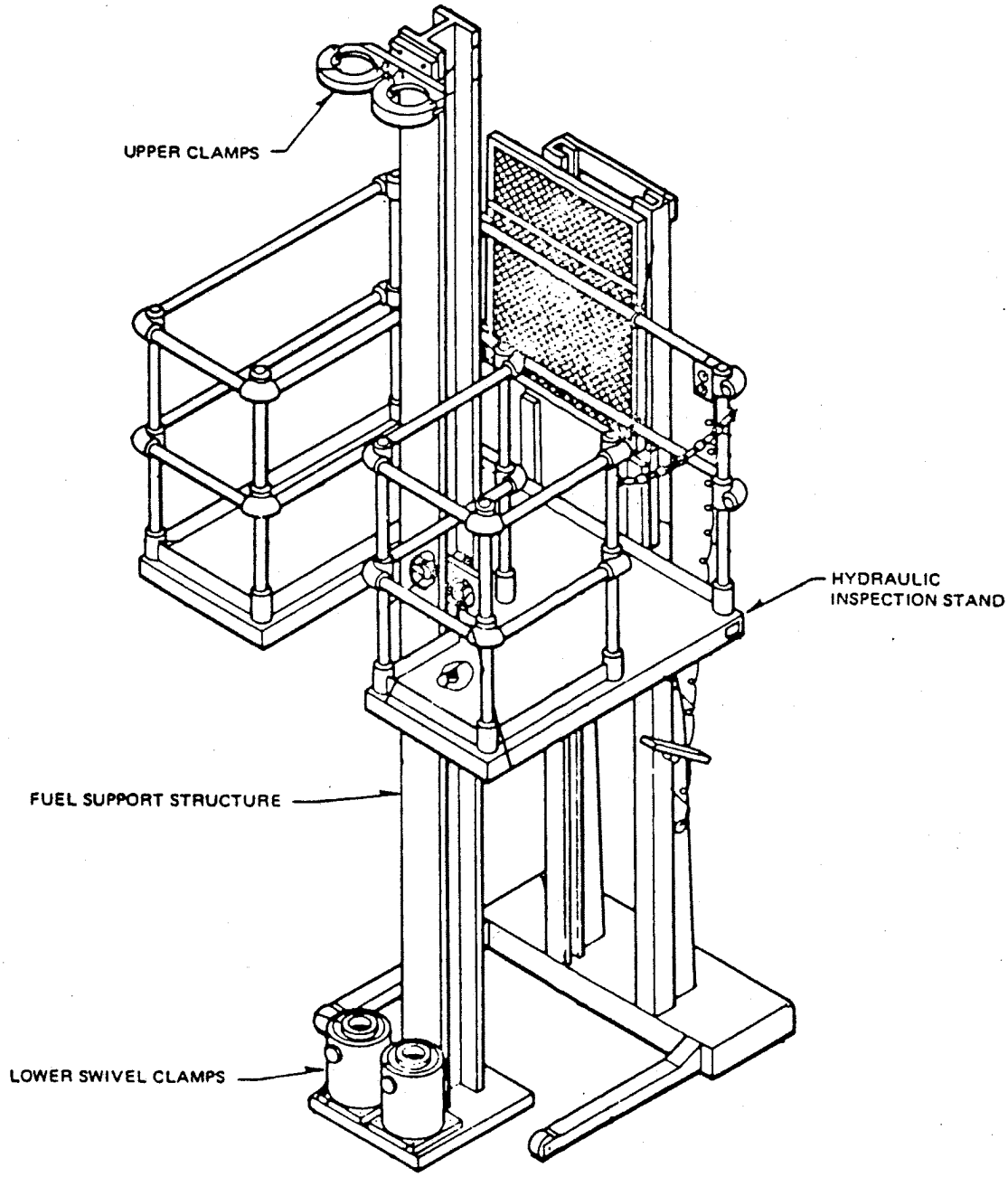

Figure 9.1-6. New Fuel Inspection Stand

REV. C

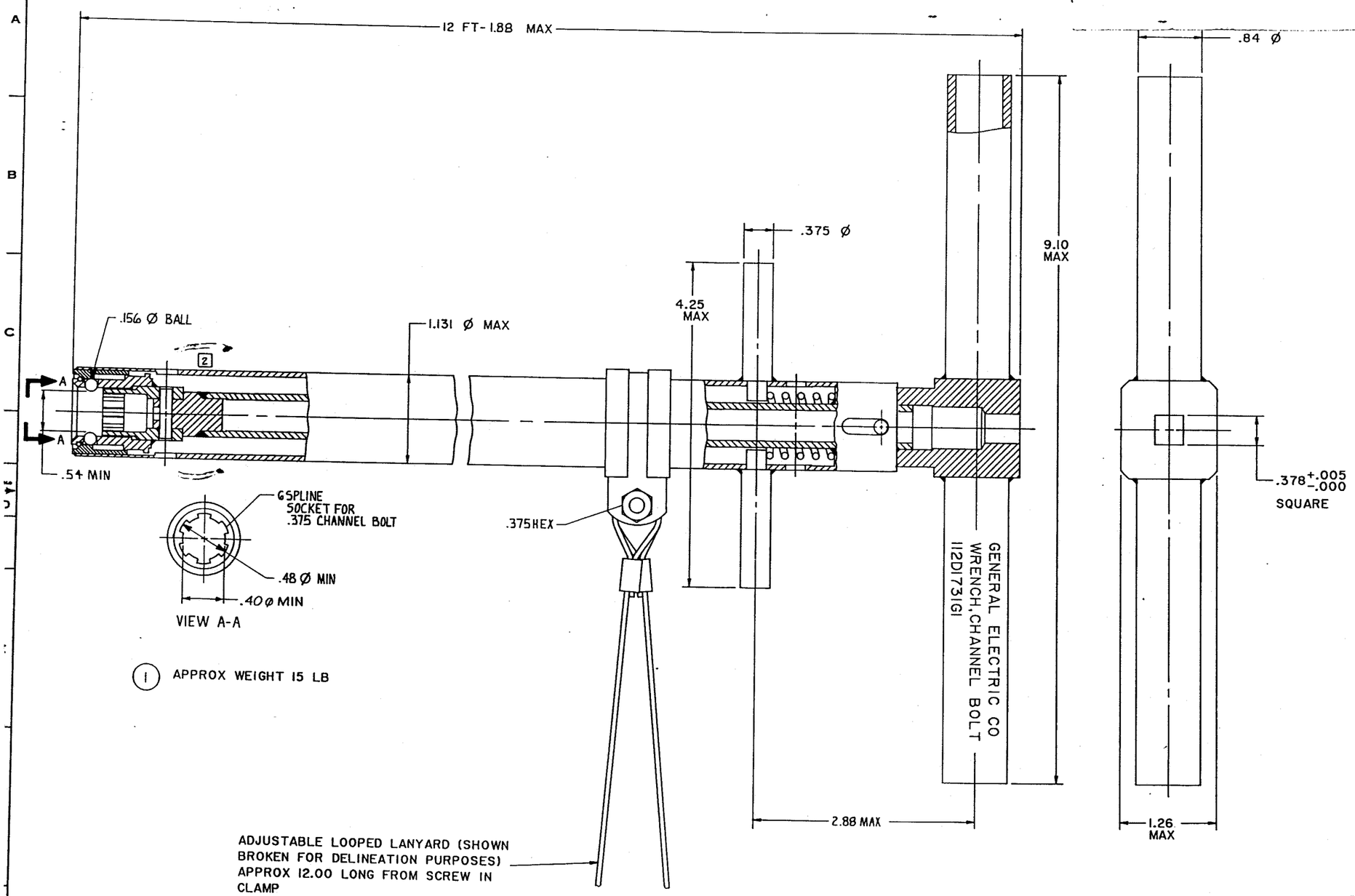

(1) APPROX WEIGHT 15 LB

CLINTON POWER STATION
UPDATED SAFETY ANALYSIS REPORT

FIGURE 9.1-7

CHANNEL BOLT WRENCH

PDS-1146 R. Womack CHKD BY: R WOMACK NOV 10, 1977 R

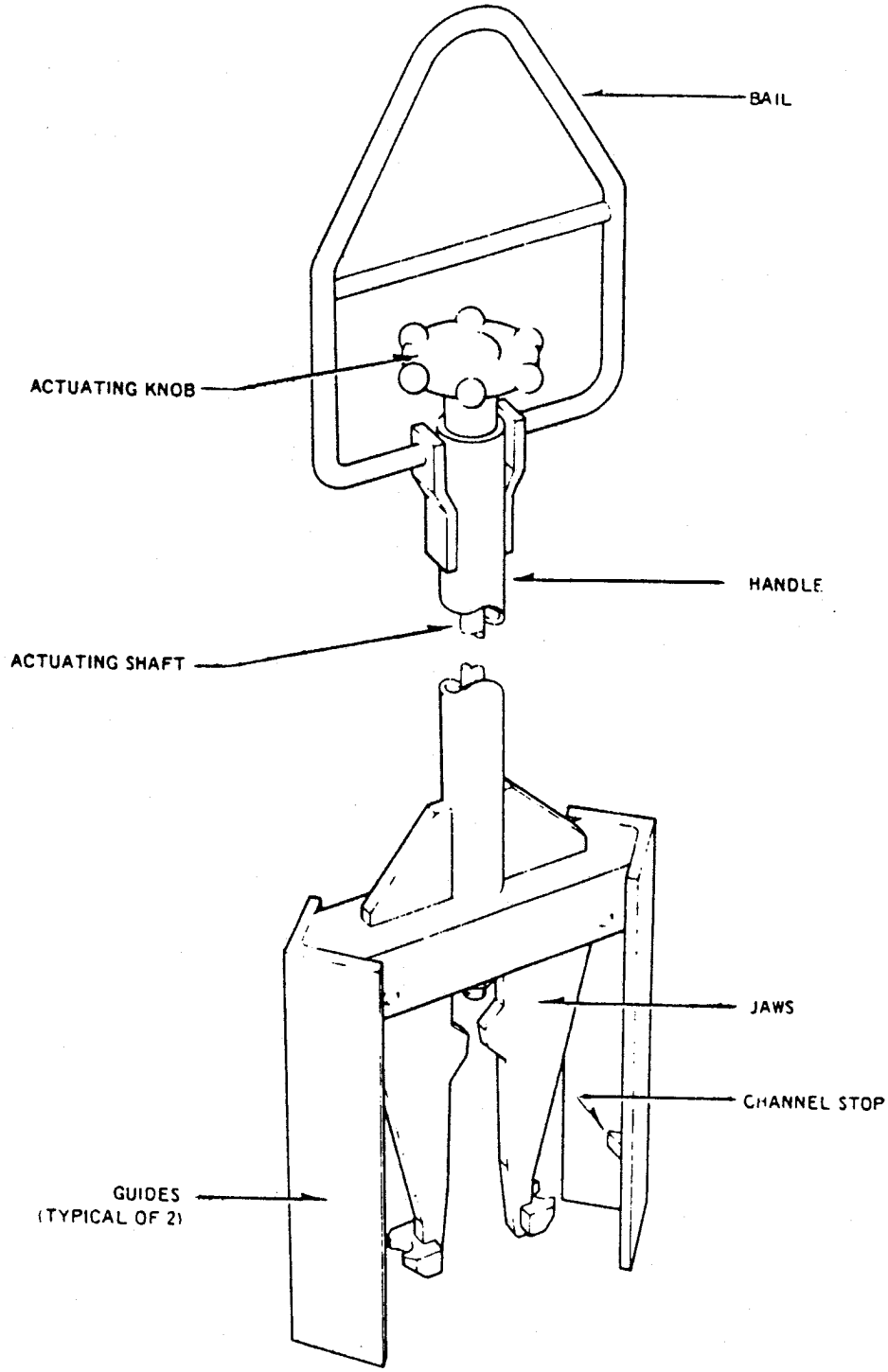

Figure 9.1-8. Channel Handling Tool

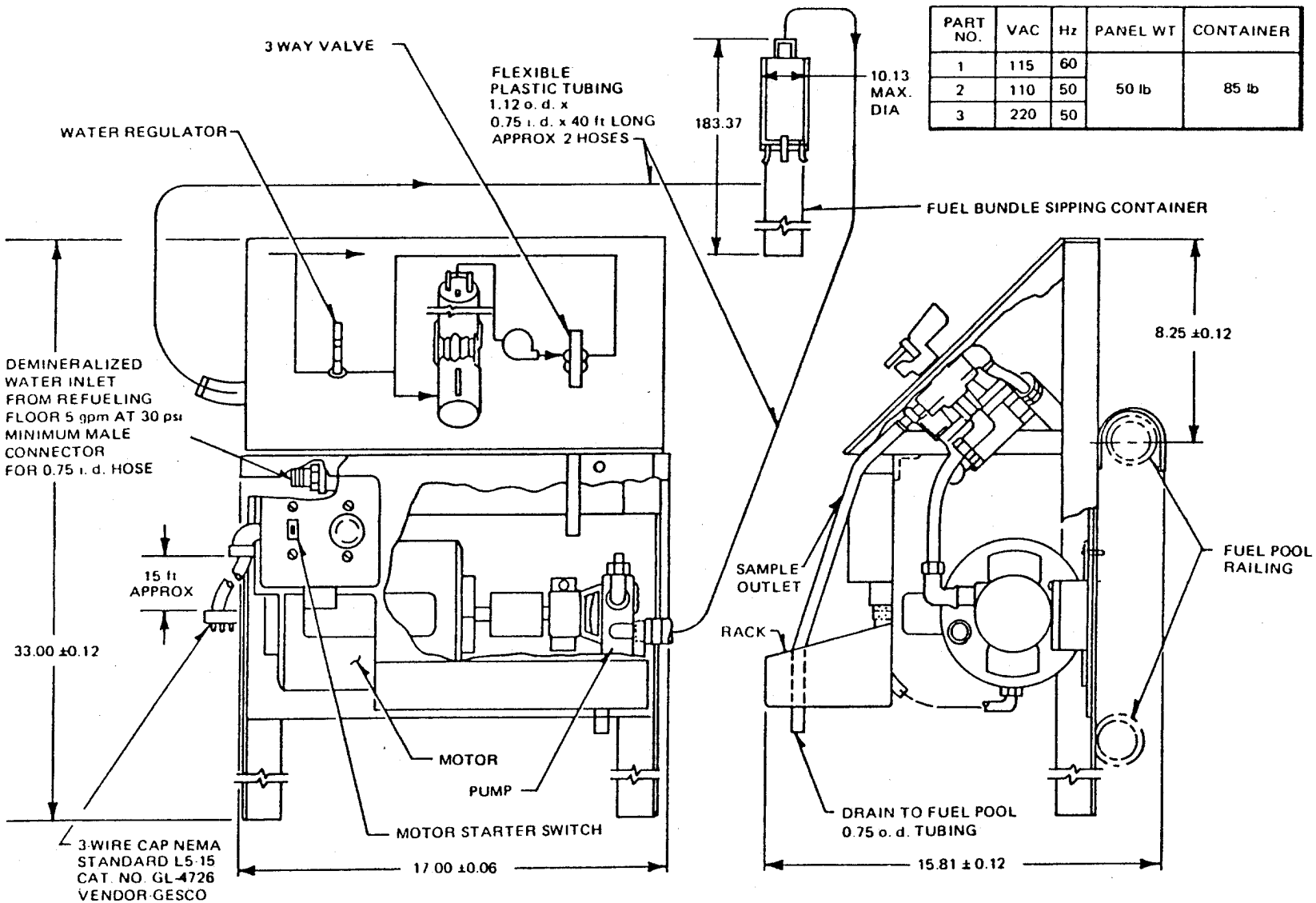

PART NO.	VAC	Hz	PANEL WT	CONTAINER
1	115	60	50 lb	85 lb
2	110	50		
3	220	50		

Figure 9.1-9. Fuel Pool Sipper

Figure 9.1-10
Deleted

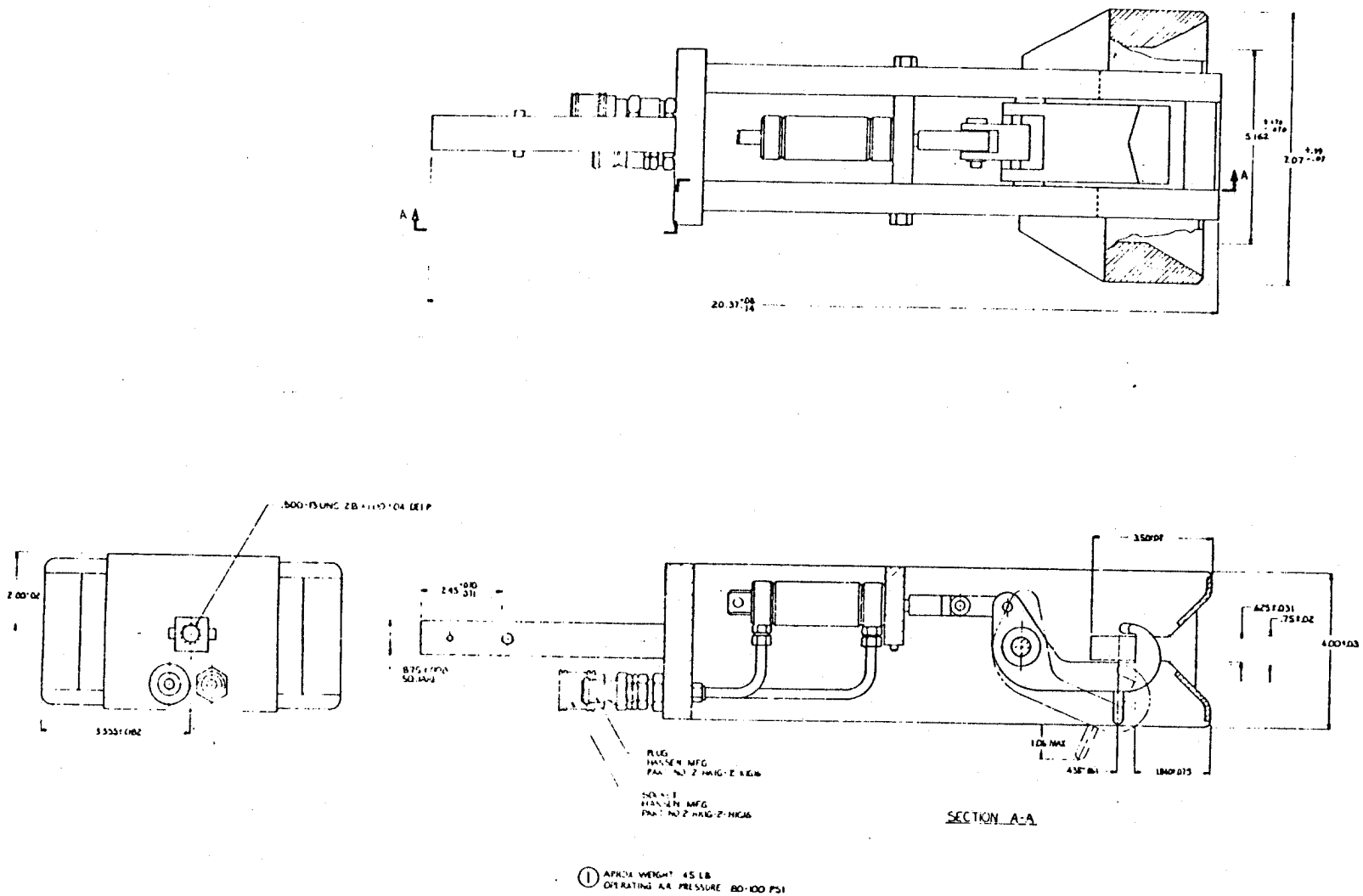

Figure 9.1-11. General-Purpose Grapple

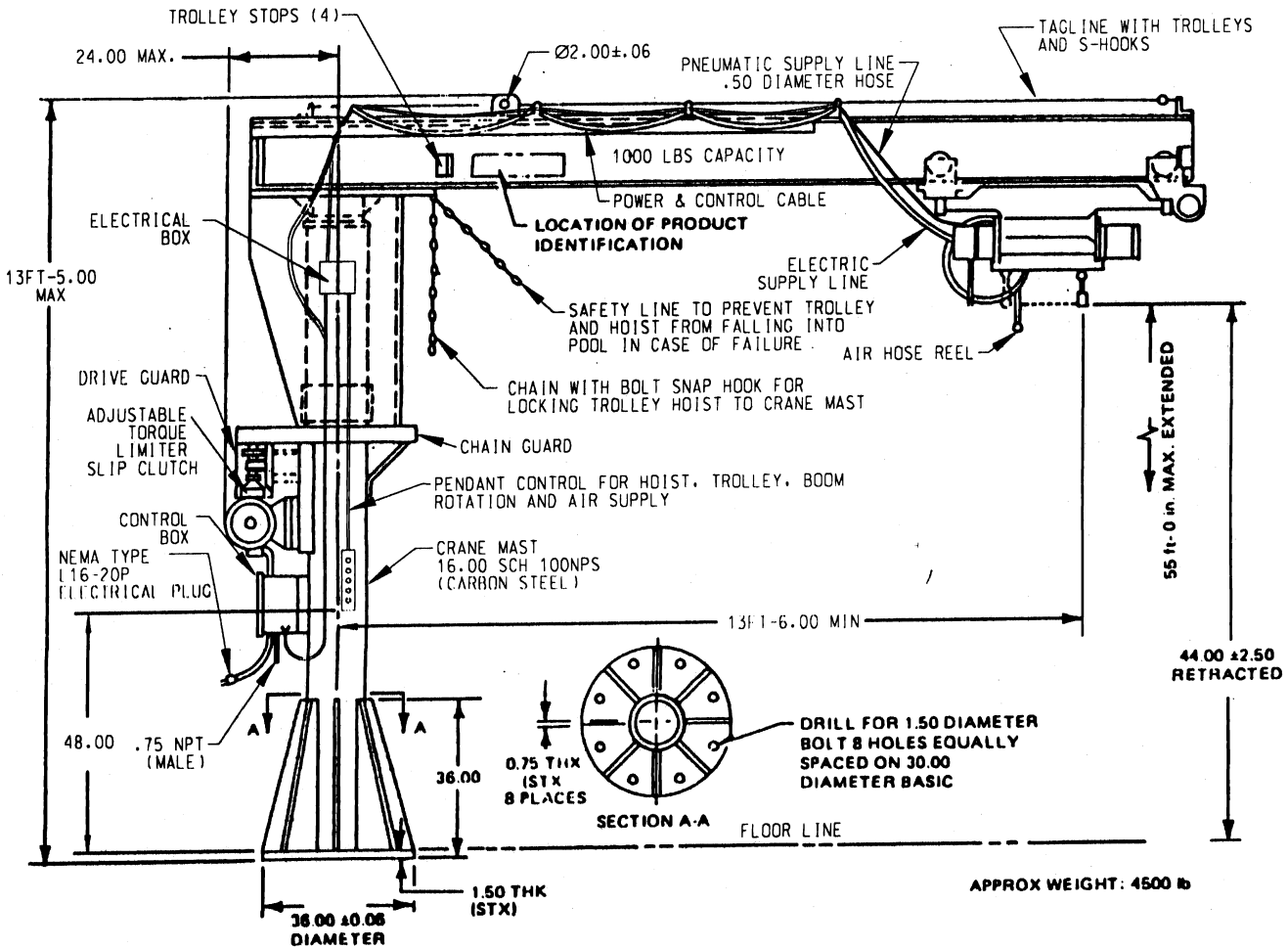

CLINTON POWER STATION
UPDATED SAFETY ANALYSIS REPORT

FIGURE 9.1-12

JIB CRANE

FIGURE 9.1-13

HAS BEEN DELETED

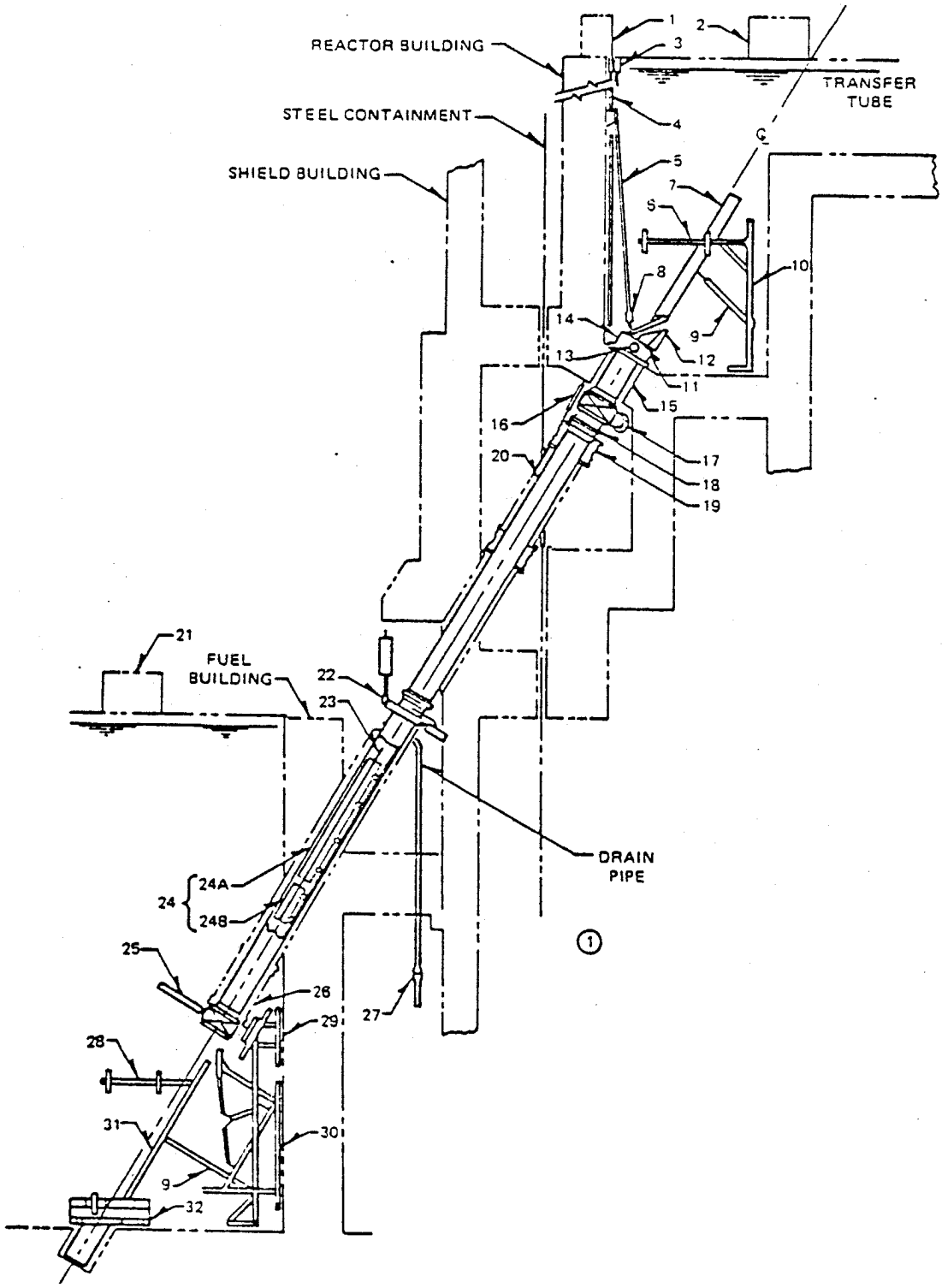

Figure 9.1-14. Transfer Tube

REVISION 10
OCTOBER 2001

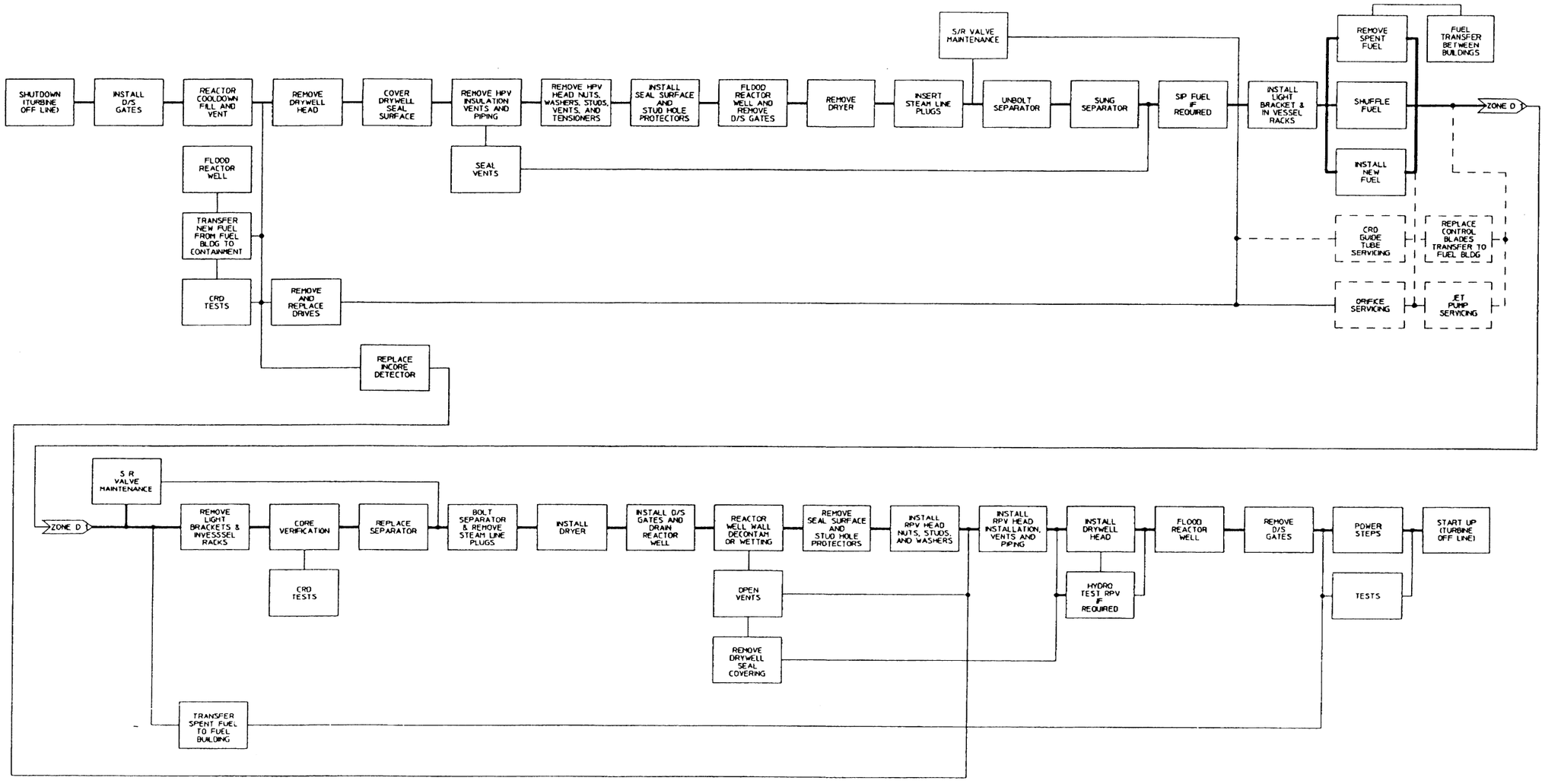

NOTES:

1. CONTAINMENT BUILDING CRANE REQUIRED DURING OPERATION.
2. ADDITIONAL NONROUTINE OPERATION TO BE PERFORMED AS REQUIRED.
3. HEAVY LINE BETWEEN OPERATIONS INDICATES ANTICIPATED CRITICAL PATH DURING NORMAL OUTAGE.
4. FOR LARGER PLANTS WHERE CONTAINMENT STORAGE IS NOT ADEQUATE, SOME ADDITIONAL TRANSFER OF NEW AND SPENT FUEL BETWEEN BUILDINGS WILL BE NECESSARY HERE.
5. THESE ACTIONS ARE NOT NECESSARILY REQUIRED TO BE PERFORMED IN THE SPECIFIC ORDER SHOWN.

CLINTON POWER STATION
UPDATED SAFETY ANALYSIS REPORT

FIGURE 9.1-15
PLANT REFUELING AND SERVICING SEQUENCE
SHEET 1

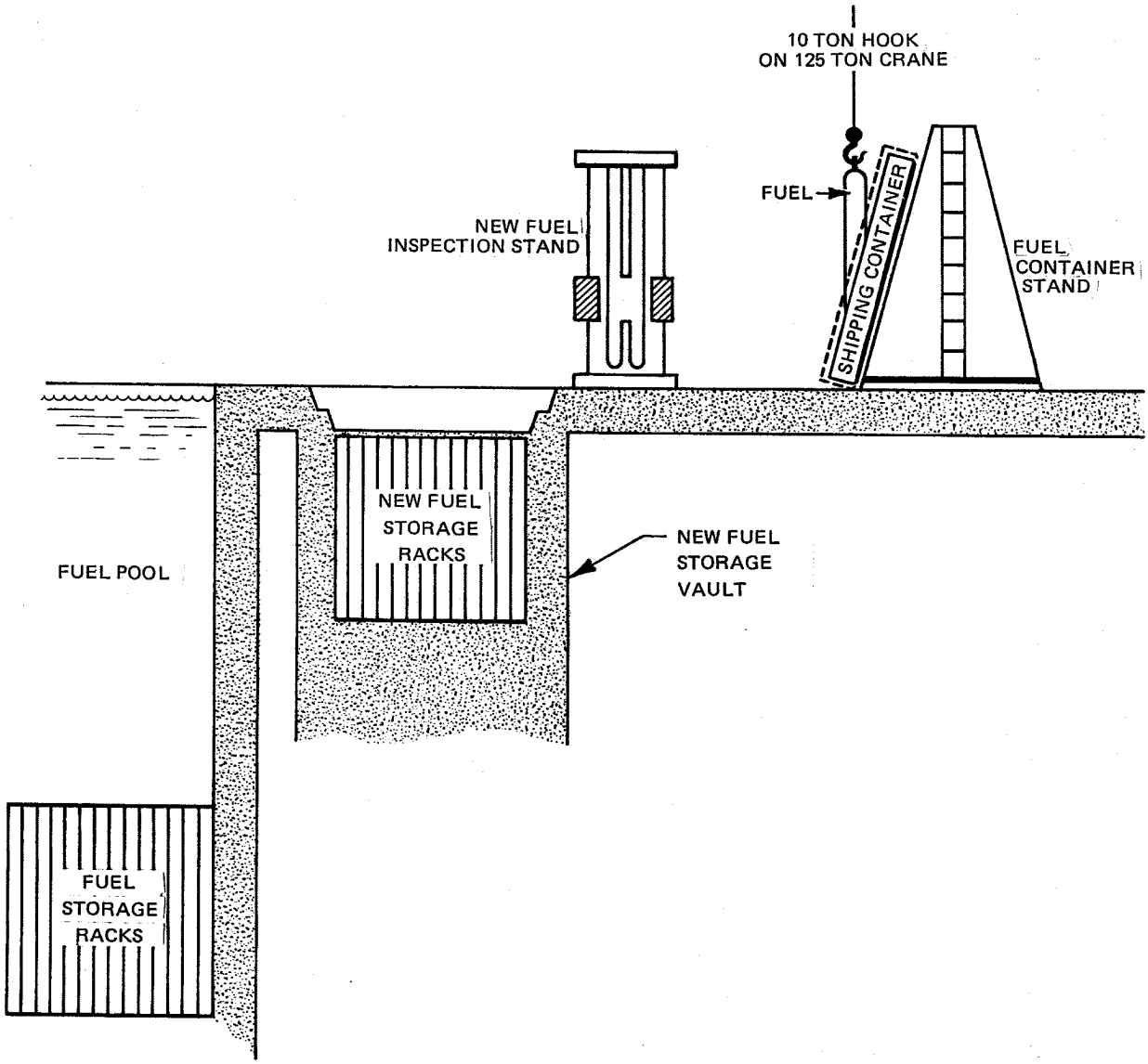

Figure 9.1–17 SIMPLIFIED SECTION OF NEW FUEL HANDLING FACILITIES (Fuel Building)

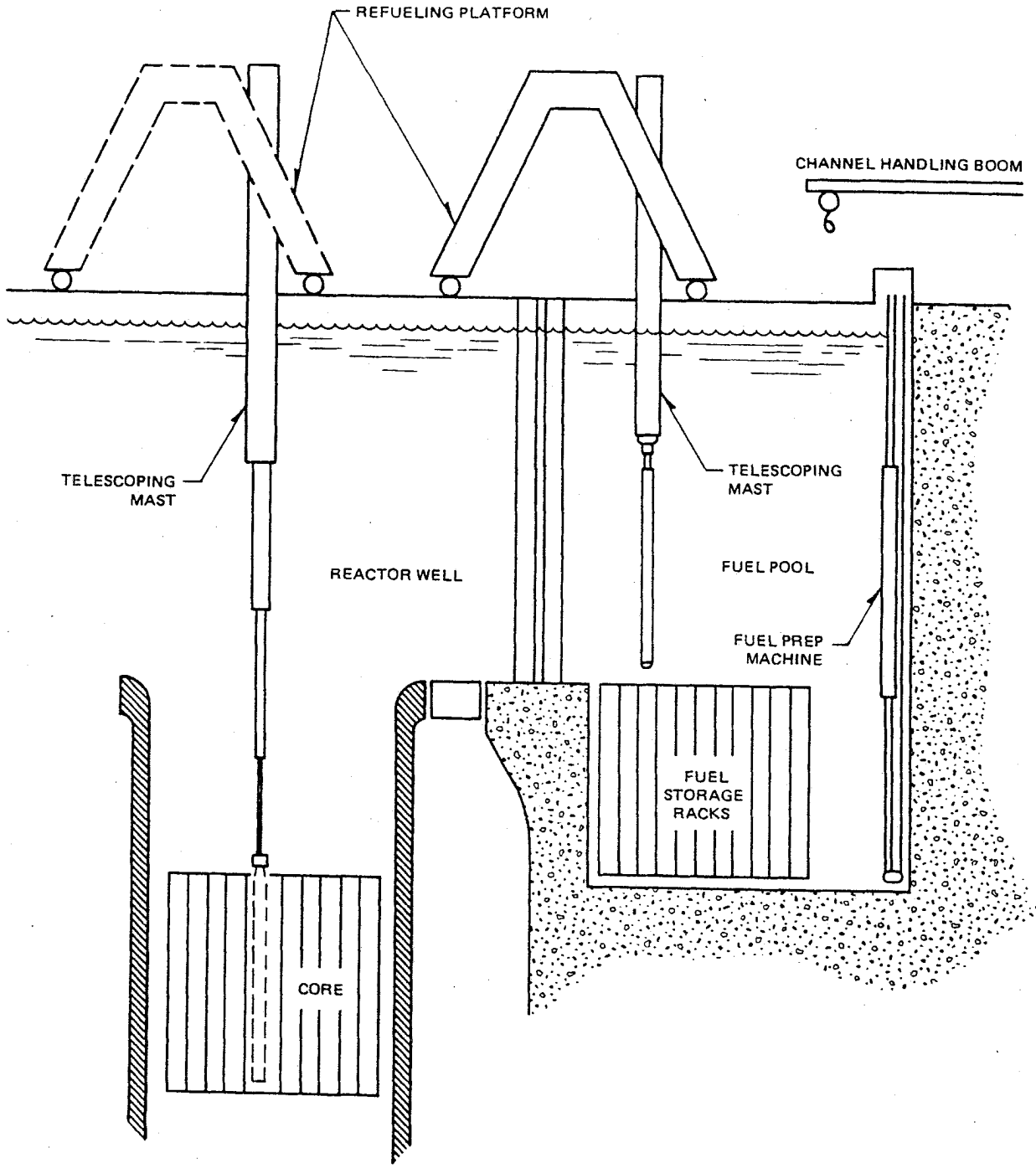

Figure 9.1-18. Simplified Section of Refueling Facilities (Reactor Building)

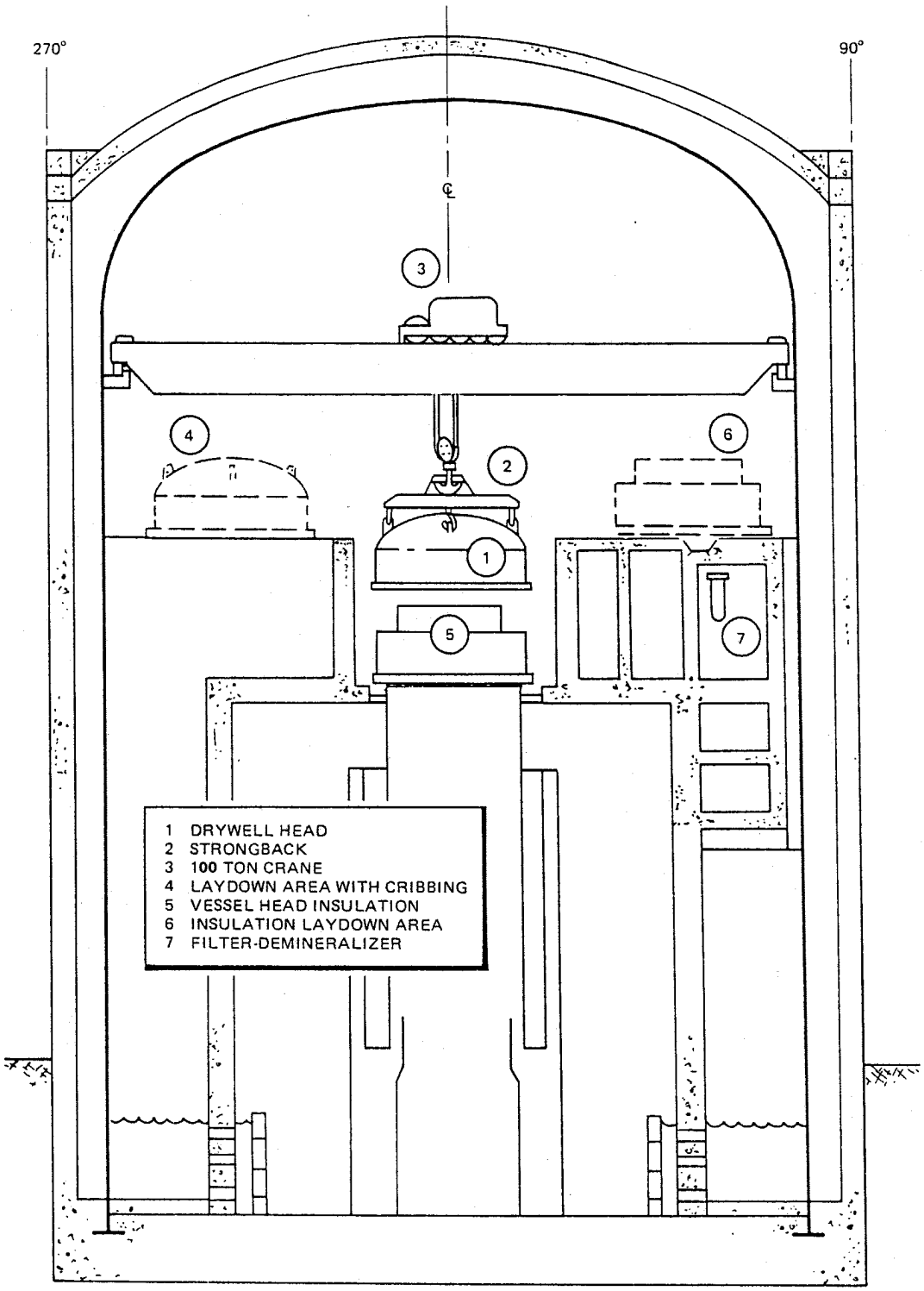

Figure 9.1-18a. Drywell Head Removal Sequence

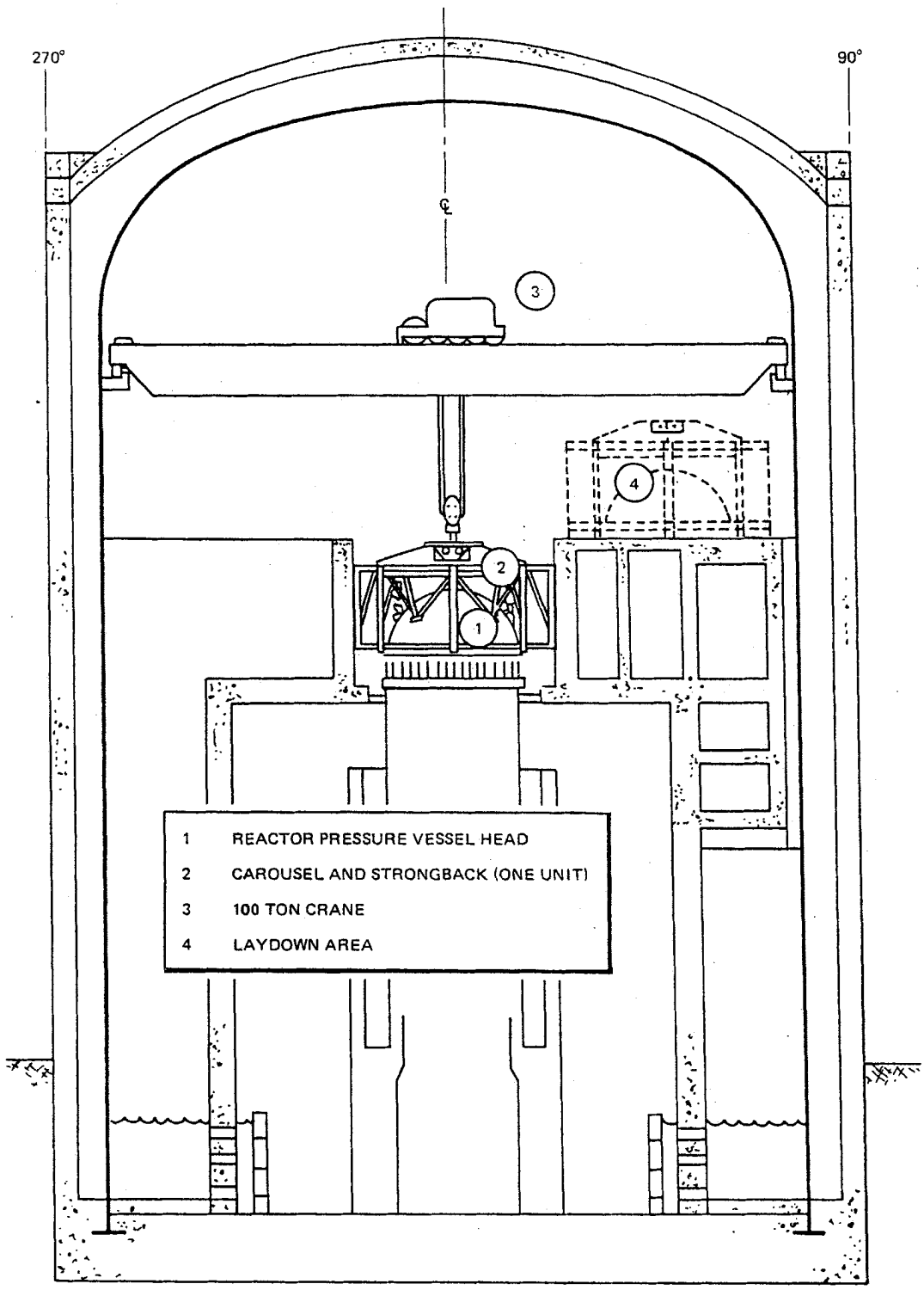

Figure 9.1-18b. Reactor Vessel Head Removal Sequence

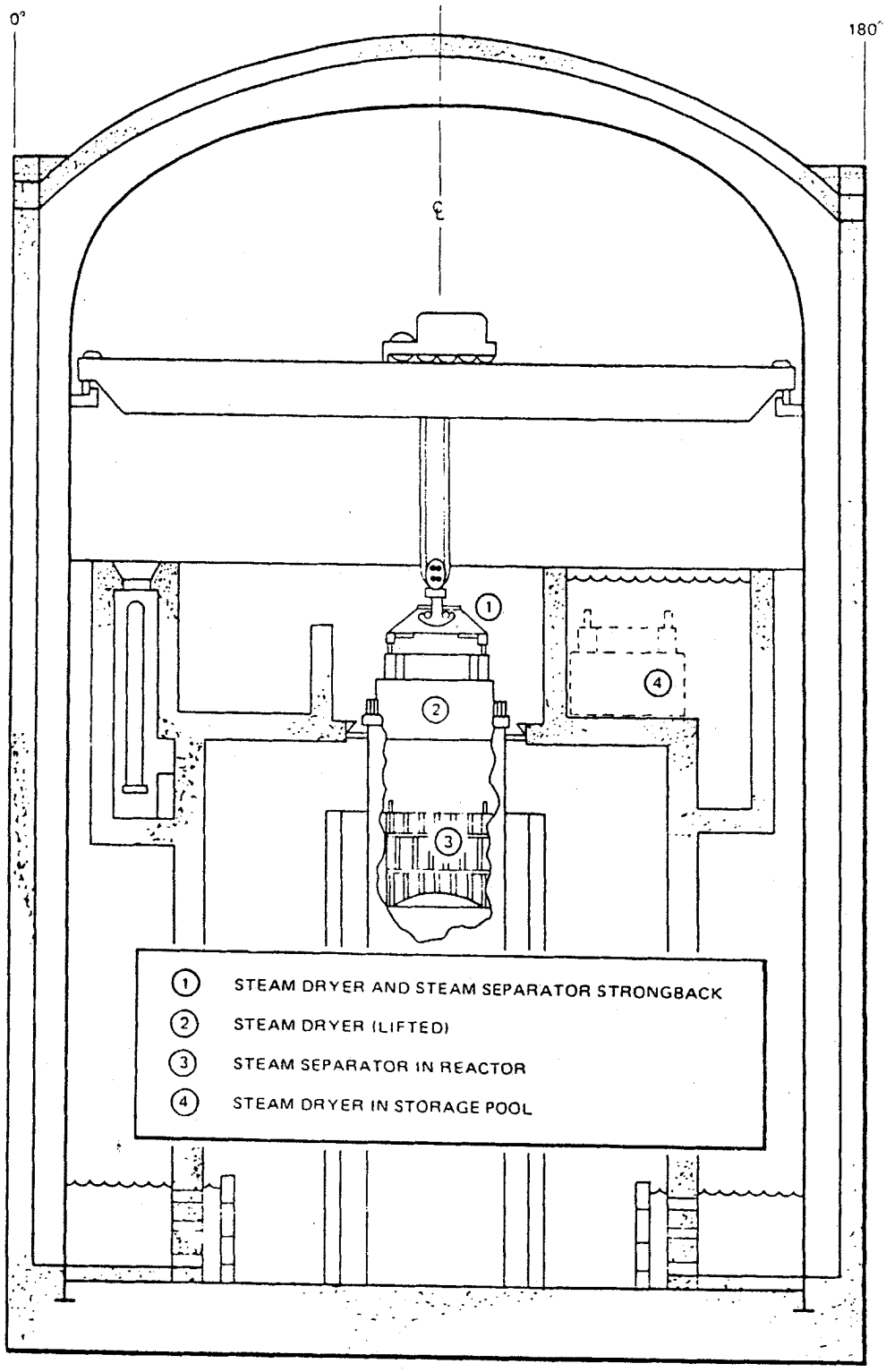

Figure 9.1-19. Steam Dryer Removal Sequence

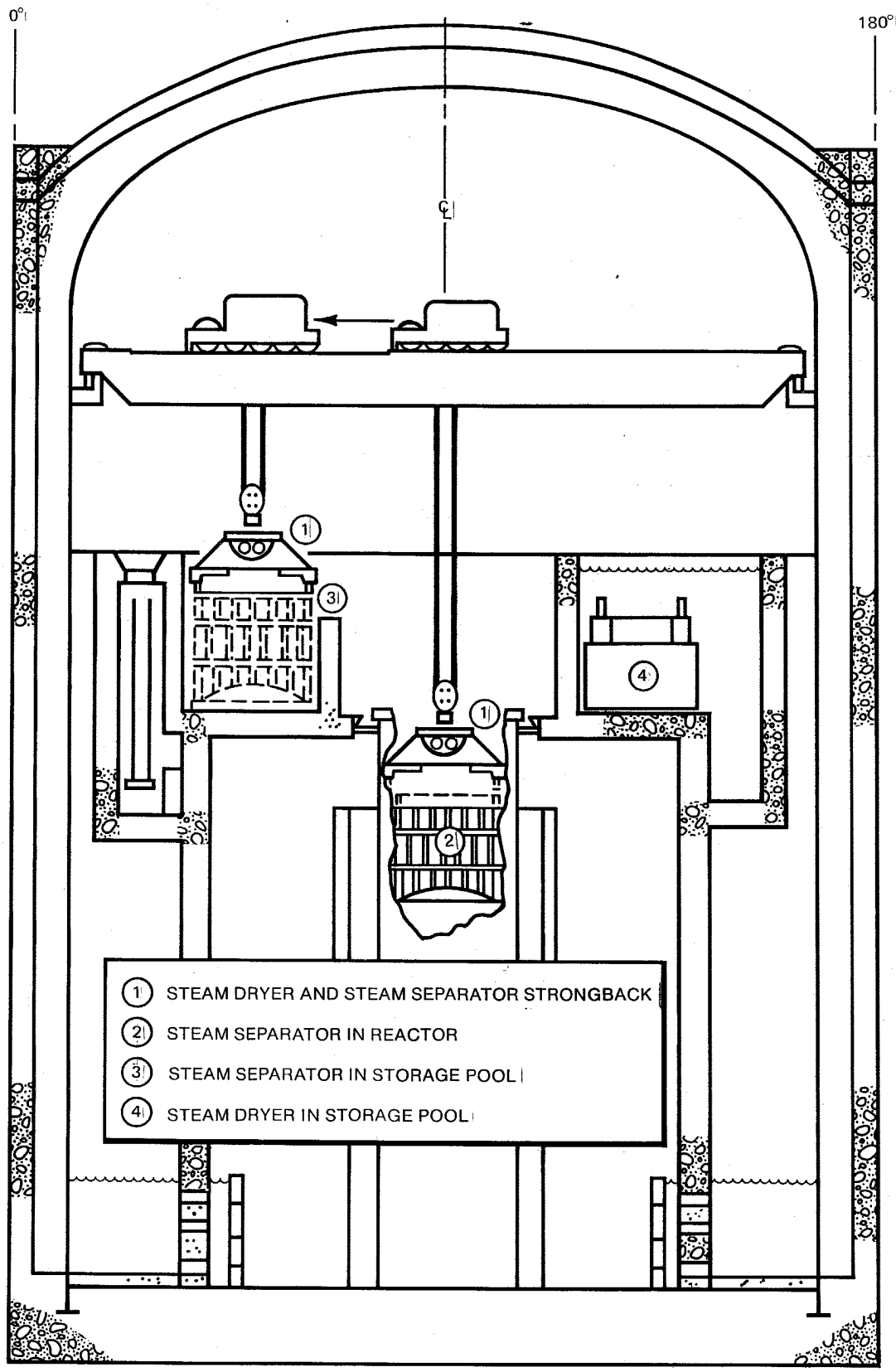

Figure 9.1-20. SEPARATOR REMOVAL SEQUENCE

Figure 9.1-16
Deleted

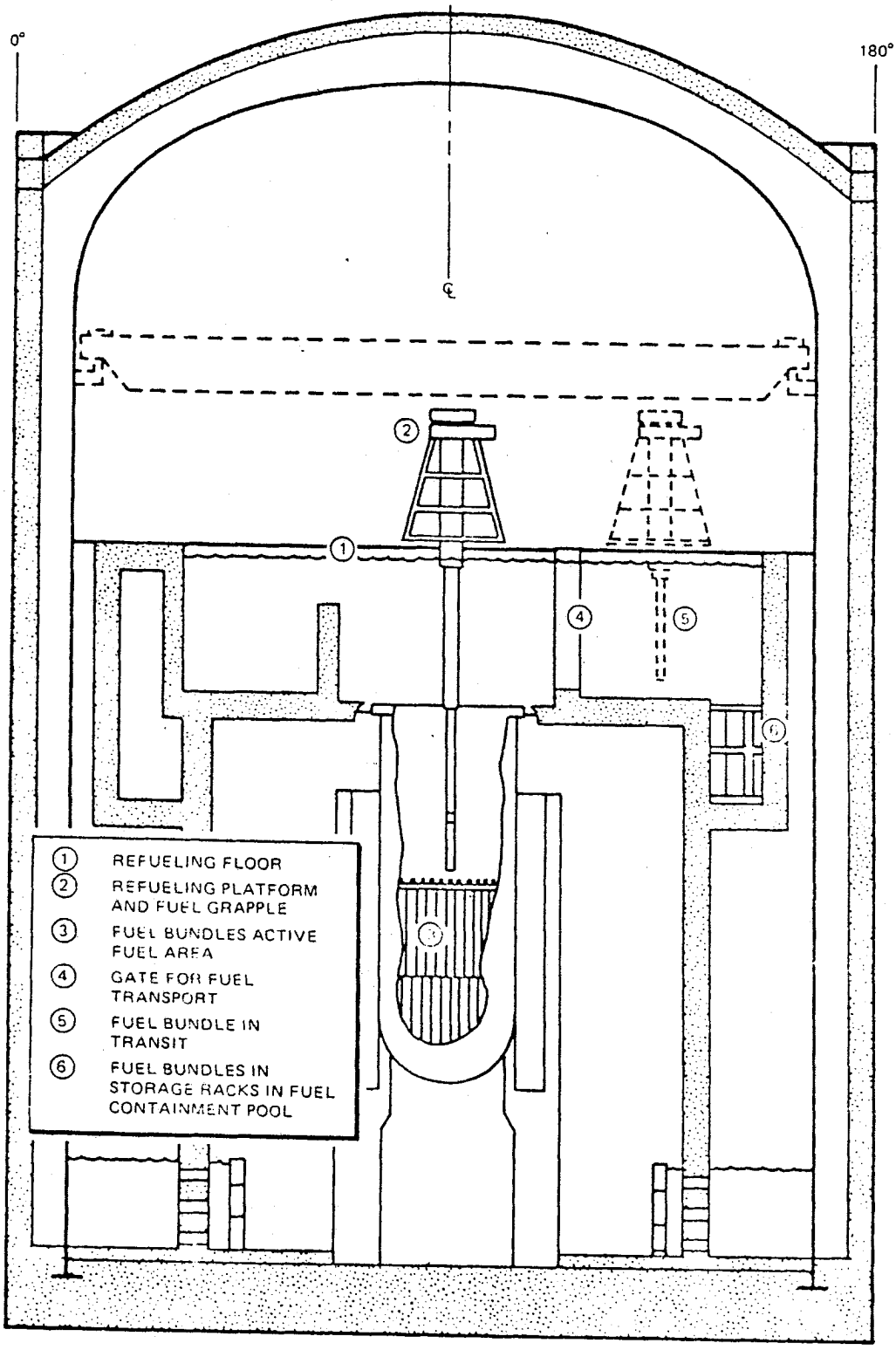

Figure 9.1-21. Fuel Bundle Transfer Sequence

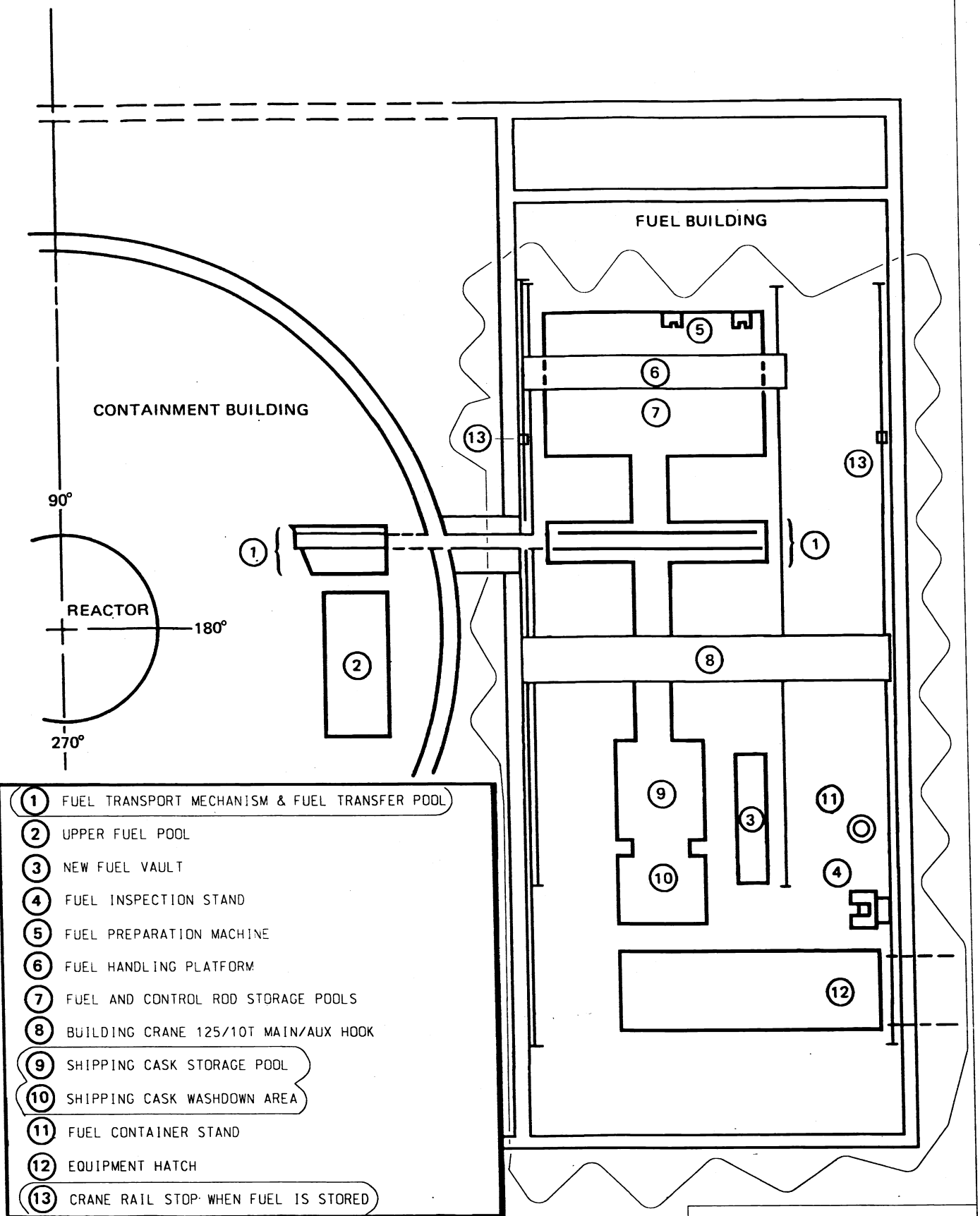

CLINTON POWER STATION
UPDATED SAFETY ANALYSIS REPORT

FIGURE 9.1-22
FUEL BUNDLE LAYDOWN AREAS

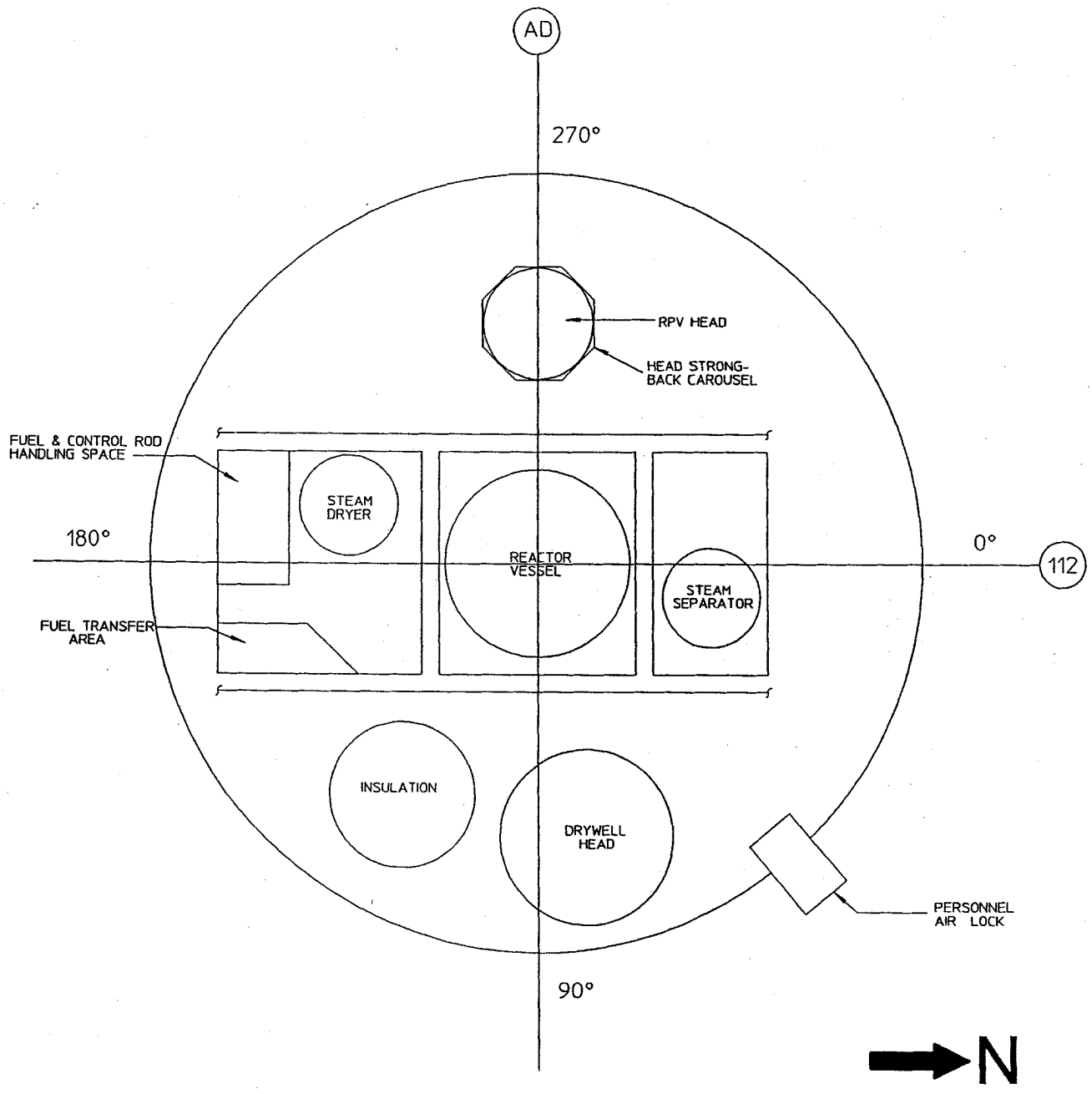

FIGURE 9.1-23 CONTAINMENT BUILDING LAYDOWN AREAS

Figure 9.1-24
Deleted

FIGURES 9.2-1 THROUGH 9.2-3

HAVE BEEN DELETED

REVISION 10
OCTOBER 2001

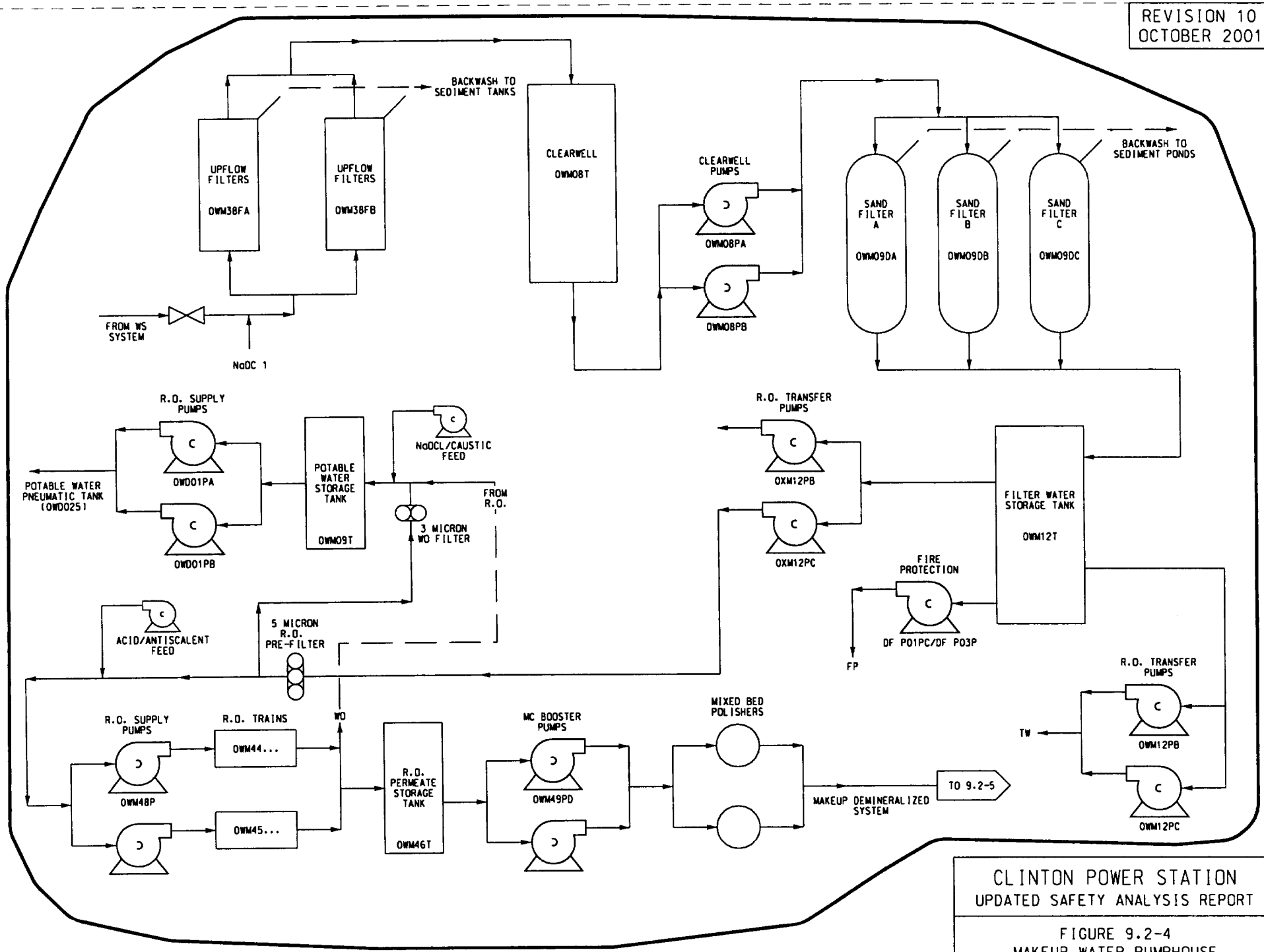

CLINTON POWER STATION
UPDATED SAFETY ANALYSIS REPORT

FIGURE 9.2-4
MAKEUP WATER PUMPHOUSE
FLOWPATH (SIMPLIFIED)

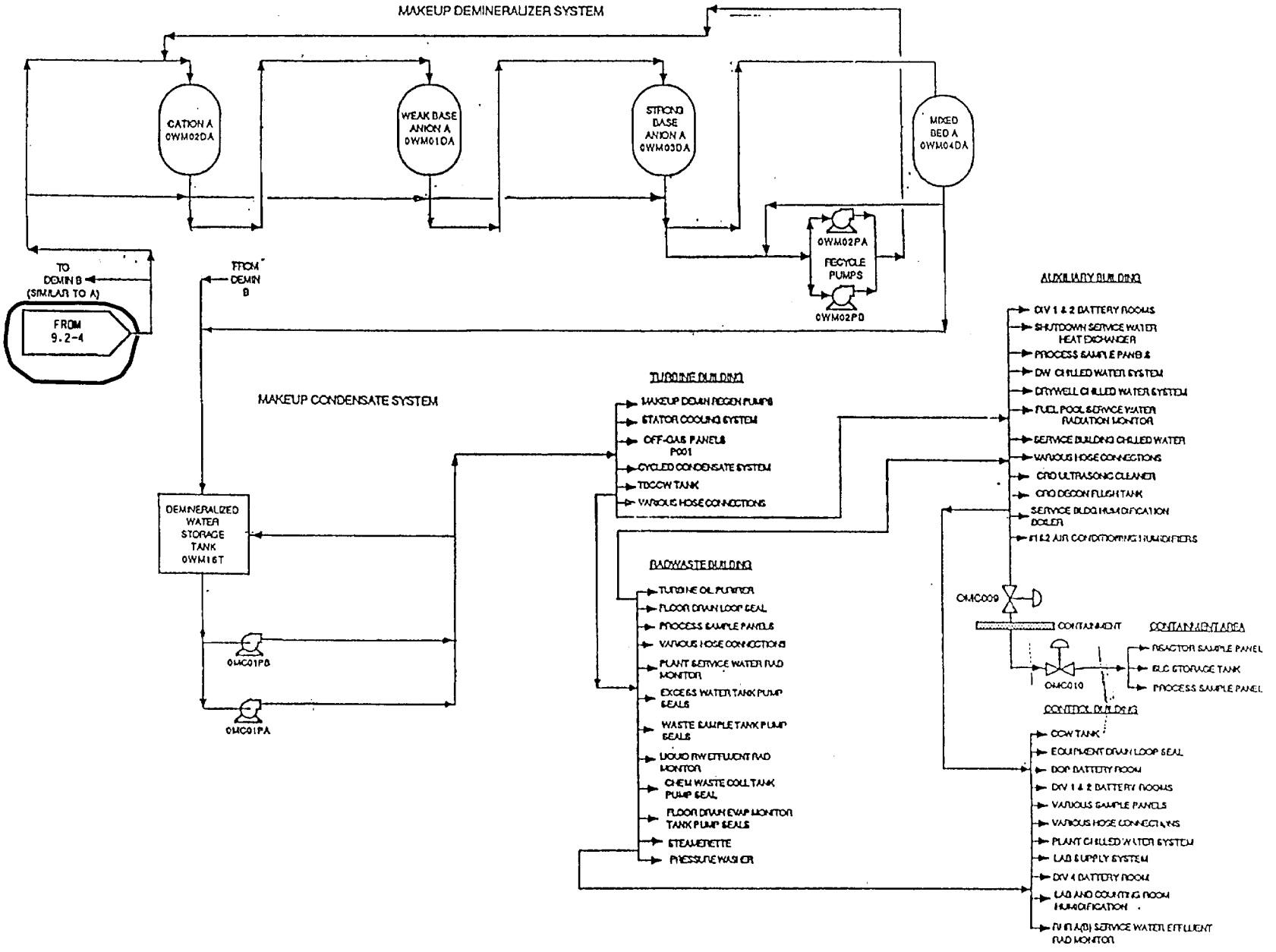

CLINTON POWER STATION
UPDATED SAFETY ANALYSIS REPORT

FIGURE 9.2-5
MAKEUP CONDENSATE STORAGE

FIGURE 9.2-6
HEAT REJECTED TO ULTIMATE HEAT SINK
UNITS BROUGHT TO COLD SHUTDOWN

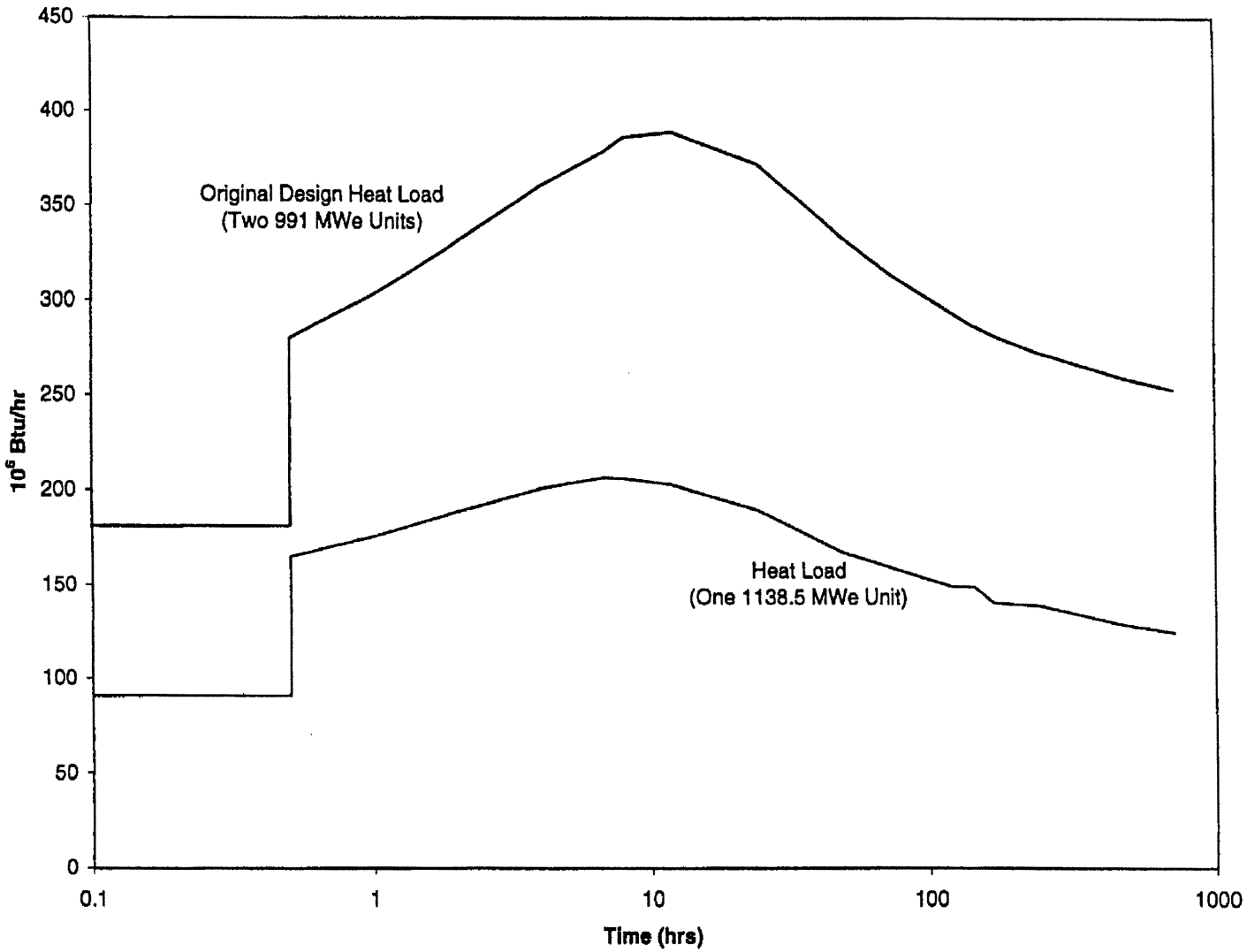

CLINTON POWER STATION
UPDATED SAFETY ANALYSIS REPORT
FIGURE 9.2-6
HEAT REJECTED TO ULTIMATE HEAT SINK FOR UNITS BROUGHT TO COLD SHUTDOWN

REVISION 10
OCTOBER 2002

Figure 9.2-7
Heat Rejection Rates for Unit 1 Under LOCA or LOOP

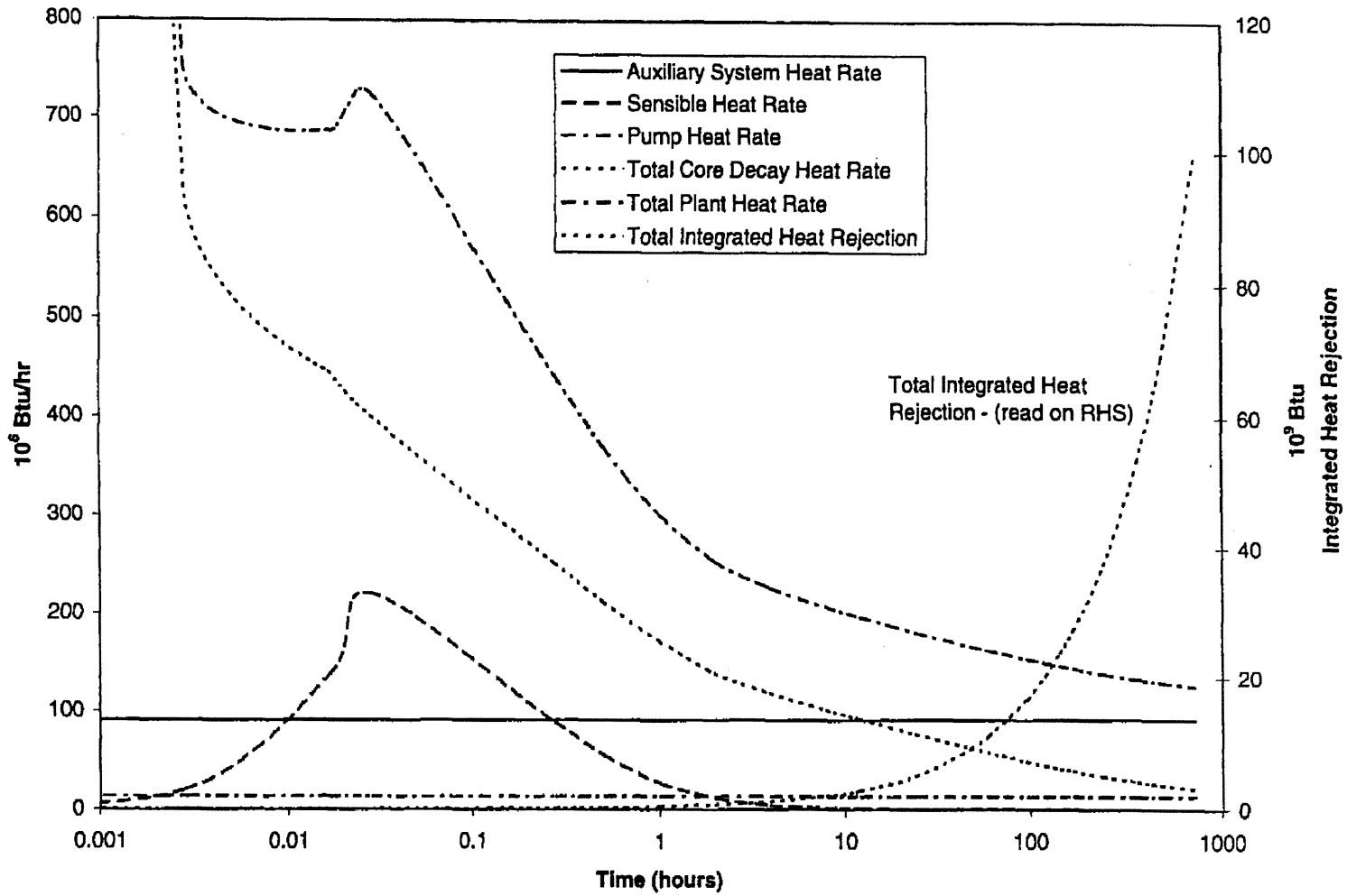

CLINTON POWER STATION
UPDATED SAFETY ANALYSIS REPORT

FIGURE 9.2-7
HEAT REJECTION RATES FOR UNIT 1
UNDER LOCA OR LOOP

FIGURES 9.2-8 AND 9.2-9

HAVE BEEN DELETED

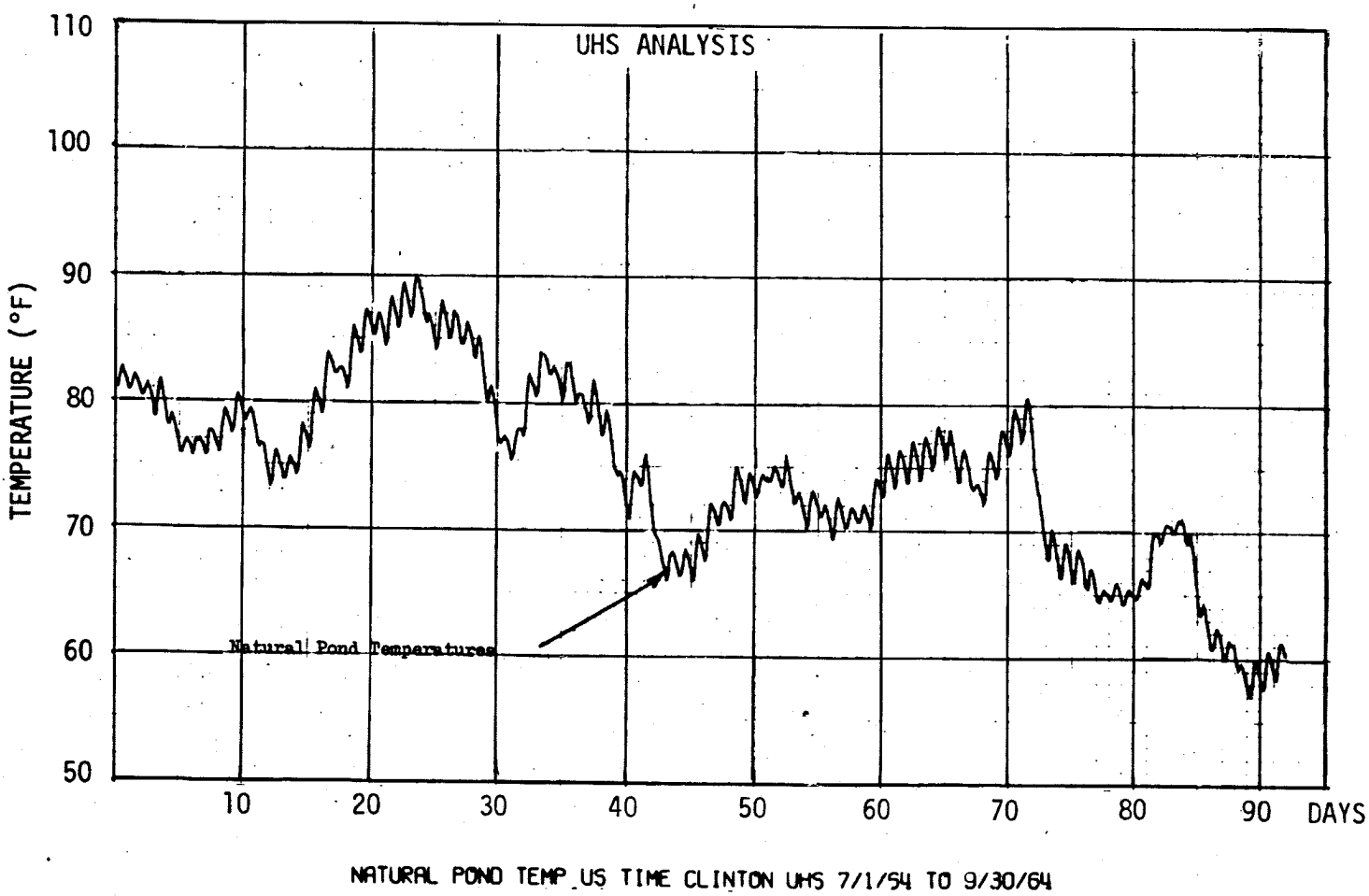

CLINTON POWER STATION
UPDATED SAFETY ANALYSIS REPORT

FIGURE 9.2-10

NATURAL POND TEMPERATURES

Figures 9.2-11 through 9.2-16
Deleted

Figures 9.3-1 through 9.3-6
Deleted

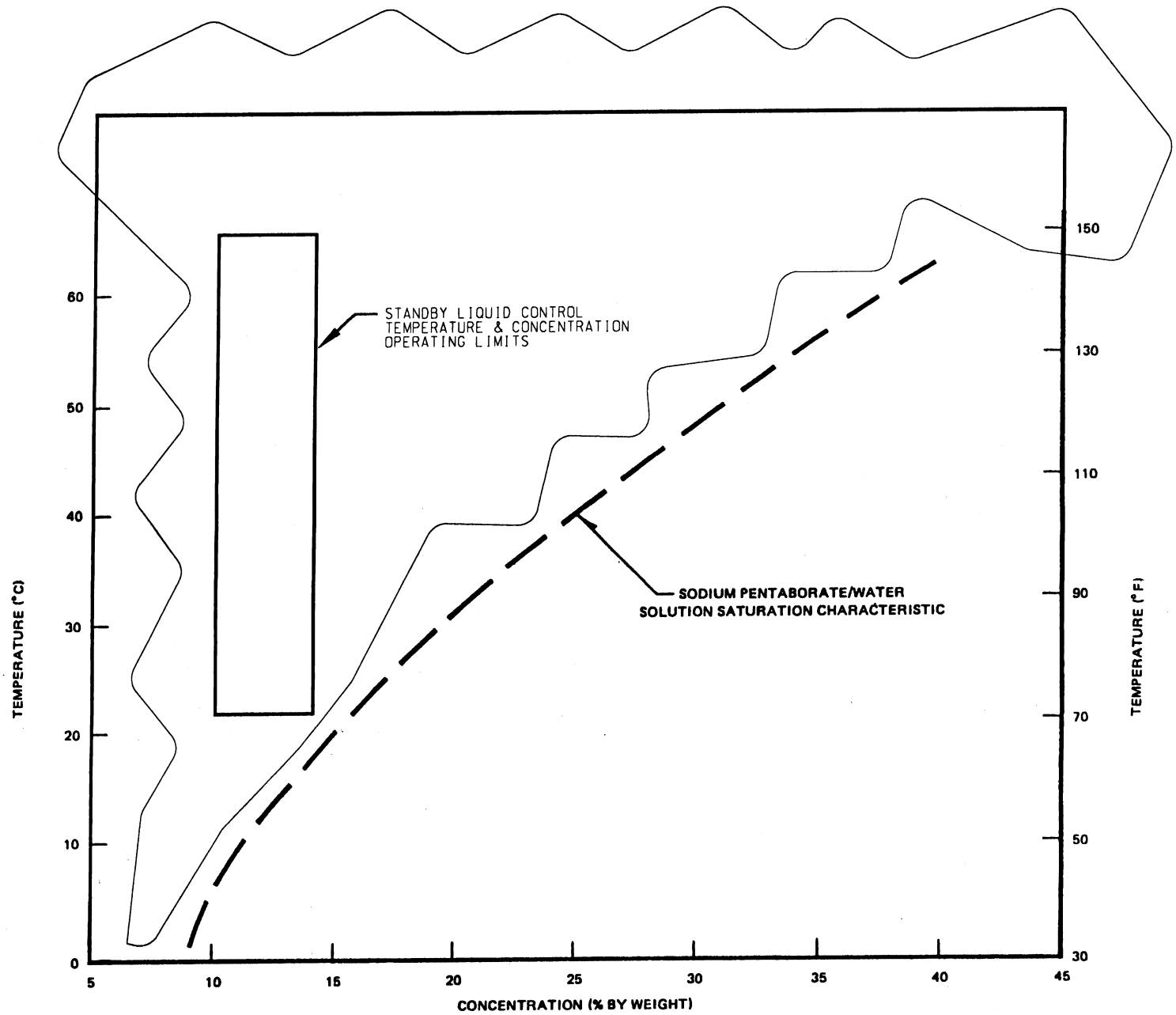

CLINTON POWER STATION
UPDATED SAFETY ANALYSIS REPORT

FIGURE 9.3-7

SATURATION TEMPERATURE OF
SODIUM PENTABORATE SOLUTION

Figures 9.3-8 and 9.3-9
Deleted

Figures 9.4-1 through 9.4-21
Delete

Figures 9.5-1 through 9.5-6
Deleted

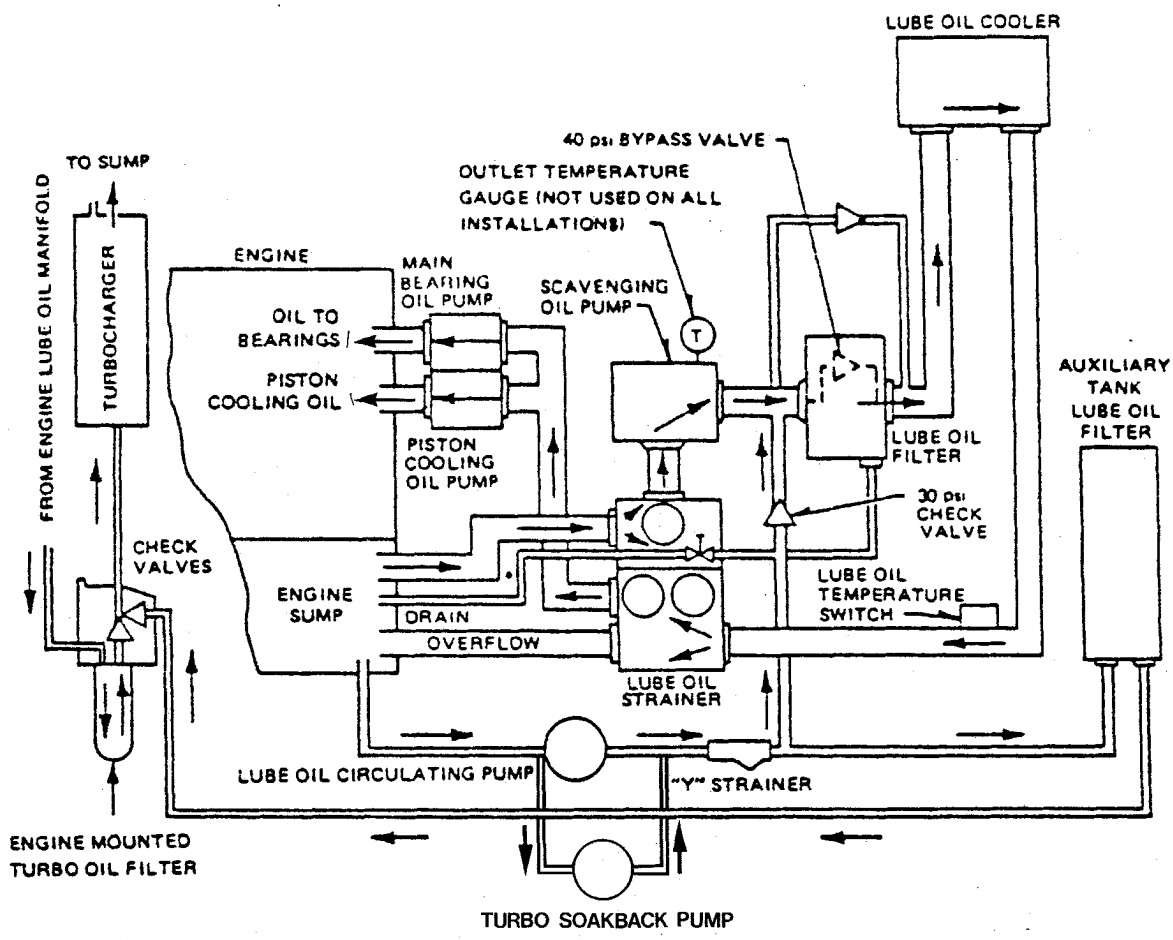

Figure 9.5-7. Typical Diesel Generator Lube Oil System Schematic Diagram

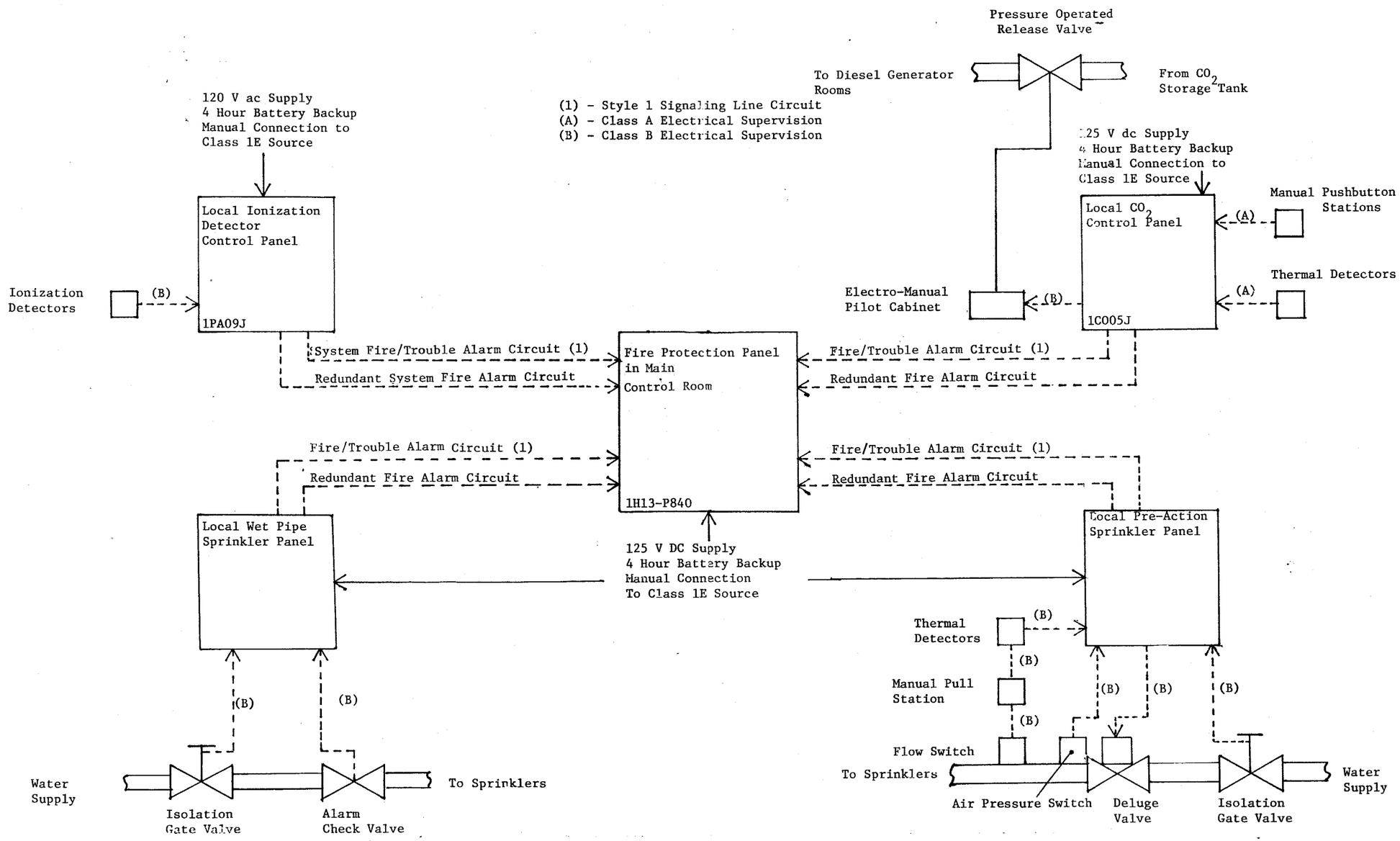

CLINTON POWER STATION
UPDATED SAFETY ANALYSIS REPORT

FIGURE 9.5-8

CIRCUIT ARRANGEMENT FOR DETECTION AND SUPPRESSION SYSTEMS LOCATED IN BUILDINGS CONTAINING SAFETY-RELATED EQUIPMENT

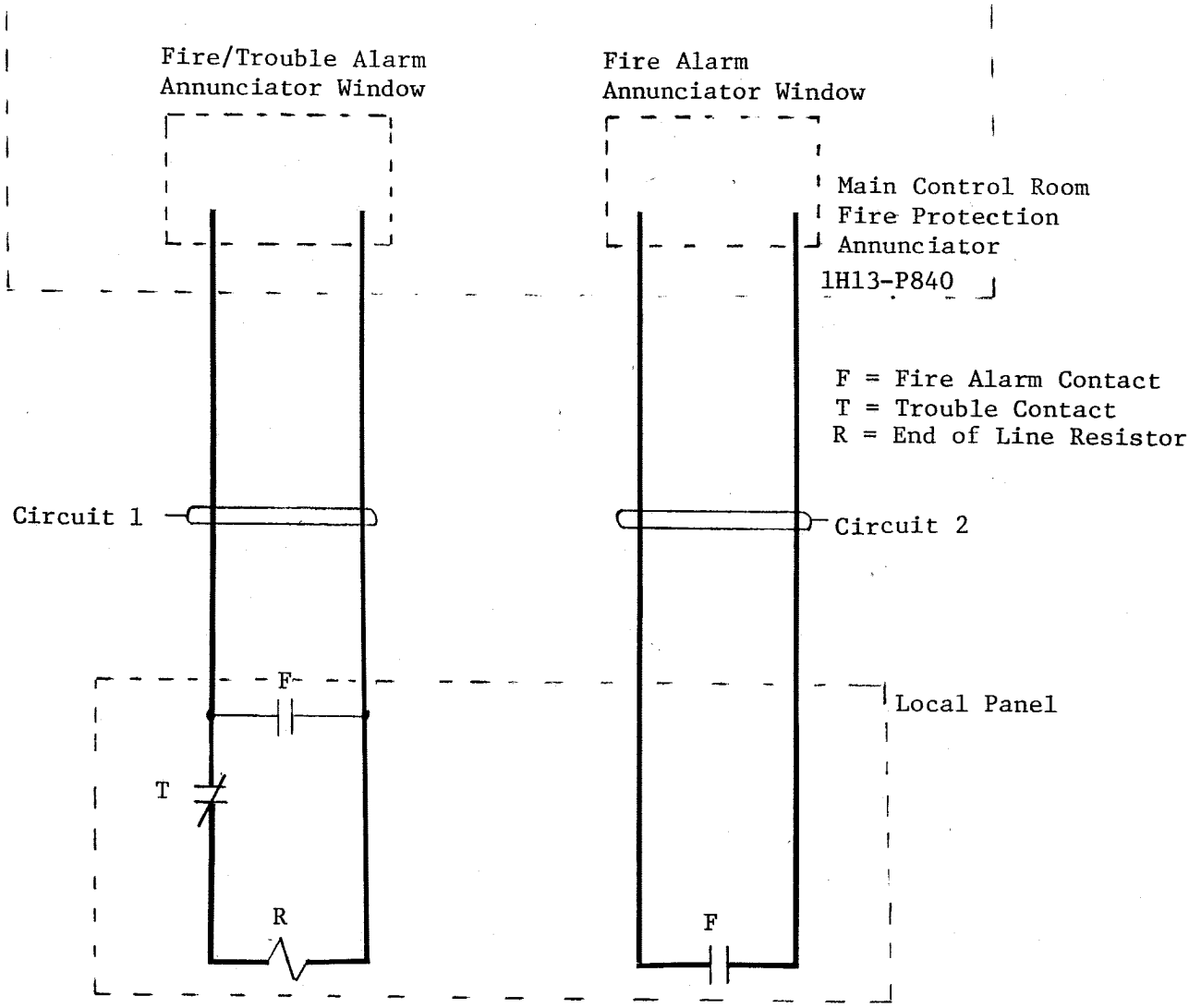

Circuit 1 operation provides separate visual indication of fire or trouble. Circuit 2 provides redundant fire alarm receipt capability.

CLINTON POWER STATION
UPDATED SAFETY ANALYSIS REPORT

FIGURE 9.5-9

TYPICAL FIRE AND TROUBLE ALARM INDICATION FOR DETECTION AND SUPPRESSION SYSTEMS LOCATED IN BUILDINGS CONTAINING SAFETY-RELATED EQUIPMENT