CHAPTER 7 INSTRUMENTATION AND CONTROL SYSTEMS

TABLE OF CONTENTS

		PAGE
7.1	INTRODUCTION	7.1-1
7.1.1	Identification of Safety-Related Systems	7.1-1
7.1.1.1	General	7.1-1
7.1.1.2	Identification of Individual Systems	7.1-1
7.1.1.3	Classification	7.1-7
7.1.1.3.1	Safety-Related Systems	7.1-7
7.1.1.3.2	Power Generation Systems	7.1-7
7.1.1.3.3	General Functional Requirements of Design Bases	7.1-7
7.1.1.3.4	Specific Regulatory Requirements	7.1-7
7.1.2	Identification of Safety and Power Generation Criteria	7.1-8
7.1.2.1	General	7.1-8
7.1.2.1.1	Reactor Protection (Trip) System (RPS) – Instrumentation and Control	7.1-8
7.1.2.1.1.1	Safety Design Bases	7.1-8
7.1.2.1.1.1.1	General Functional Requirements	7.1-8
7.1.2.1.1.1.2	Specific Regulatory Requirements	7.1-9
7.1.2.1.1.2	Power Generation Design Bases	7.1-10
7.1.2.1.2	Containment and Reactor Vessel Isolation Control System (CRVICS) - Instrumentation and Controls	7.1-10
7.1.2.1.2.1	Safety Design Bases	7.1-10
7.1.2.1.2.1.1	General Functional Requirements	7.1-10
7.1.2.1.2.2	Specific Regulatory Requirements	7.1-12
7.1.2.1.3	Emergency Core Cooling Systems (ECCS) – Instrumentation and Controls	7.1-12
7.1.2.1.3.1	Safety Design Bases	7.1-12
7.1.2.1.3.1.1	General Functional Requirements	7.1-12
7.1.2.1.3.1.2	Specific Regulatory Requirements	7.1-12
7.1.2.1.4	Neutron Monitoring System (NMS) - Instrumentation and Controls	7.1-13
7.1.2.1.4.1	Source Range Monitor (SRM) Subsystem	7.1-13
7.1.2.1.4.1.1	Power Generation Design Basis	7.1-13
7.1.2.1.4.1.2	Specific Regulatory Requirements	7.1-13
7.1.2.1.4.2	Intermediate Range Monitor (IRM) Subsystem	7.1-13
7.1.2.1.4.2.1	Safety Design Basis	7.1-13
7.1.2.1.4.2.2	Specific Regulatory Requirements	7.1-14
7.1.2.1.4.2.3	Power Generation Design Bases	7.1-14
7.1.2.1.4.3	Local Power Range Monitor (LPRM) Subsystem	7.1-14
7.1.2.1.4.3.1	Specific Regulatory Requirements	7.1-14
7.1.2.1.4.3.2	Power Generation Design Bases	7.1-14
7.1.2.1.4.4	Average Power Range Monitor (APRM) Subsystem	7.1-14
7.1.2.1.4.4.1	Safety Design Basis	7.1-14
7.1.2.1.4.4.2	Specific Regulatory Requirements	7.1-14

TABLE OF CONTENTS (Cont'd)

		PAGE
7.1.2.1.4.4.3	Power Generation Design Bases	7.1-14
7.1.2.1.4.5	Traversing Incore Probe (TIP) Subsystem	7.1-15
7.1.2.1.4.5.1	Power Generation Design Bases	7.1-15
7.1.2.1.4.5.2	Specific Regulatory Requirements	7.1-15
7.1.2.1.4.6	Oscillation Power Range Monitor (OPRM) Subsystem	7.1-15
7.1.2.1.4.6.1	Safety Design Basis	7.1-15
7.1.2.1.4.6.2	Specific Regulatory Reguirements	7.1-15
7.1.2.1.4.6.3	Power Generation Design Bases	7.1-15
7.1.2.1.5	Refueling Interlocks - Instrumentation and Controls	7.1-16
7.1.2.1.5.1	Power Generation Design Bases	7.1-16
7.1.2.1.5.2	Specific Regulatory Requirements	7.1-16
7.1.2.1.6	Rod Control and Information System (RCIS) – Instrumentation and Controls	7.1-16
7.1.2.1.6.1	Safety Design Bases	7.1-16
7.1.2.1.6.2	Specific Regulatory Requirements	7.1-16
7.1.2.1.6.3	Power Generation Design Bases	7.1-16
7.1.2.1.7	Reactor Vessel - Instrumentation	7.1-17
7.1.2.1.7.1	Power Generation Design Basis	7.1-17
7.1.2.1.7.2	Specific Regulatory Requirements	7.1-17
7.1.2.1.8	Recirculation Flow Control System - Instrumentation and Controls	7.1-17
7.1.2.1.8.1	Power Generation Design Bases	7.1-17
7.1.2.1.8.2	Specific Regulatory Requirements	7.1-17
7.1.2.1.9	Feedwater Control System - Instrumentation and Controls	7.1-17
7.1.2.1.10	Pressure Regulator and Turbine-Generator System - Instrumentation and Controls	7.1-18
7.1.2.1.10.1	Power Generation Design Bases	7.1-18
7.1.2.1.10.2	Specific Regulatory Requirements	7.1-18
7.1.2.1.11	Process Radiation Monitoring System – Instrumentation and Controls	7.1-18
7.1.2.1.11.1	Deleted	7.1-18
7.1.2.1.11.1.1	Deleted	
7.1.2.1.11.1.2	Deleted	
7.1.2.1.11.1.3	Deleted	
7.1.2.1.11.2	Containment Building Fuel Transfer Ventilation Plenum Radiation Monitoring Subsystem	7.1-18
7.1.2.1.11.2.1	Safety Design Basis	7.1-18
7.1.2.1.11.2.2	Specific Regulatory Requirements	7.1-19
7.1.2.1.11.2.3	Power Generation Design Basis	7.1-19
7.1.2.1.11.3	Containment Building Exhaust Duct Radiation Monitoring Subsystem	7.1-19
7.1.2.1.11.3.1	Safety Design Basis	7.1-19
7.1.2.1.11.3.2	Specific Regulatory Requirements	7.1-19
7.1.2.1.11.3.3	Power Generation Design Basis	7.1-19
7.1.2.1.11.4	Fuel Building Ventilation Exhaust Duct Radiation Monitoring Subsystem	7.1-19
7.1.2.1.11.4.1	Safety Design Bases	7.1-19

TABLE OF CONTENTS (Cont'd)

		PAGE
7.1.2.1.11.4.2	Specific Regulatory Requirements	7.1-20
7.1.2.1.11.4.3	Power Generation Design Basis	7.1-20
7.1.2.1.11.5	Control Room Air Intake Radiation Monitoring Subsystem	7.1-20
7.1.2.1.11.5.1	Safety Design Basis	7.1-20
7.1.2.1.11.5.2	Specific Regulatory Requirements	7.1-20
7.1.2.1.11.5.3	Power Generation Design Basis	7.1-20
7.1.2.1.12	Area Radiation Monitoring Systems (ARMS) – Instrumentation and Controls	7.1-20
7.1.2.1.12.1	Power Generation Design Basis	7.1-20
7.1.2.1.12.2	Specific Regulatory Requirements	7.1-20
7.1.2.1.13	Performance Monitoring System (PMS) - Instrumentation	7.1-21
7.1.2.1.13.1	Power Generation Design Bases	7.1-21
7.1.2.1.14	Standby Gas Treatment System (SGTS) – Instrumentation and Controls	7.1-21
7.1.2.1.14.1	Safety Design Bases	7.1-21
7.1.2.1.14.2	Specific Regulatory Requirements	7.1-22
7.1.2.1.15	Main Control Room HVAC System – Instrumentation and Controls	7.1-22
7.1.2.1.15.1	Safety Design Basis	7.1-22
7.1.2.1.15.2	Specific Regulatory Requirements	7.1-22
7.1.2.1.15.3	Power-Generation Design Bases	7.1-23
7.1.2.1.16	Shutdown Service Water Systems – Instrumentation and Controls	7.1-23
7.1.2.1.16.1	Safety Design Basis	7.1-23
7.1.2.1.16.2	Specific Regulatory Requirements	7.1-23
7.1.2.1.16.3	Power Generation Design Basis	7.1-23
7.1.2.1.17	Containment Combustible Gas Control System – Instrumentation and Controls	7.1-23
7.1.2.1.17.1	Safety Design Basis	7.1-23
7.1.2.1.17.2	Specific Regulatory Requirements	7.1-23
7.1.2.1.18	Reactor Core Isolation Cooling (RCIC) System – Instrumentation and Controls	7.1-23
7.1.2.1.18.1	Safety Design Bases	7.1-23
7.1.2.1.18.2	Specific Regulatory Requirements	7.1-24
7.1.2.1.19	Standby Liquid Control System (SLCS) – Instrumentation and Controls	7.1-24
7.1.2.1.19.1	Safety Design Basis	7.1-24
7.1.2.1.19.2	Specific Regulatory Requirements	7.1-24
7.1.2.1.19.3	Power Generation Design Basis	7.1-24
7.1.2.1.20	Containment Atmosphere Monitoring System (CAM) - Instrumentation and Controls	7.1-24
7.1.2.1.20.1	Safety Design Basis	7.1-24
7.1.2.1.20.2	Specific Regulatory Requirements	7.1-25
7.1.2.1.20.3	Power Generation Design Basis	7.1-25
7.1.2.1.21	Radwaste System - Instrumentation and Controls	7.1-25
7.1.2.1.21.1	Liquid Radwaste System	7.1-25
7.1.2.1.21.1.1	Specific Regulatory Requirements	7.1-25

TABLE OF CONTENTS (Cont'd)

		PAGE
7.1.2.1.21.1.2	Power Generation Design Basis	7.1-25
7.1.2.1.21.2	Gaseous Radwaste System	7.1-25
7.1.2.1.21.2.1	Specific Regulatory Requirements	7.1-25
7.1.2.1.21.2.2	Power Generation Design Bases	7.1-25
7.1.2.1.21.3	Solid Radwaste System	7.1-25
7.1.2.1.21.3.1	Specific Regulatory Requirements	7.1-25
7.1.2.1.21.3.2	Power Generation Design Basis	7.1-26
7.1.2.1.22	Reactor Water Cleanup (RWCU) System – Instrumentation and Controls	7.1-26
7.1.2.1.22.1	Power Generation Design Basis	7.1-26
7.1.2.1.22.2	Specific Regulatory Requirements	7.1-26
7.1.2.1.23	Standby Power Systems - Instrumentation and Controls	7.1-26
7.1.2.1.24	Leak Detection Systems - Instrumentation and Controls	7.1-26
7.1.2.1.24.1	Reactor Coolant Pressure Boundary Leakage Detection	7.1-26
7.1.2.1.24.1.1	Safety Design Bases	7.1-26
7.1.2.1.24.1.2	Specific Regulatory Requirements	7.1-27
7.1.2.1.24.1.3	Power Generation Design Basis	7.1-27
7.1.2.1.25	Reactor Shutdown Cooling Subsystem Mode - Instrumentation and Controls	7.1-27
7.1.2.1.25.1	Safety Design Bases	7.1-27
7.1.2.1.25.2	Specific Regulatory Requirements	7.1-27
7.1.2.1.25.3	Power Generation Design Bases	7.1-27
7.1.2.1.26	Fuel Pool Cooling Systems - Instrumentation and Controls	7.1-28
7.1.2.1.26.1	Safety Design Basis	7.1-28
7.1.2.1.26.2	Specific Regulatory Requirements	7.1-28
7.1.2.1.26.3	Power Generation Design Basis	7.1-28
7.1.2.1.27	Containment Building HVAC Instrumentation and Controls	7.1-28
7.1.2.1.27.1	Safety Design Basis	7.1-28
7.1.2.1.27.2	Specific Regulatory Requirements	7.1-28
7.1.2.1.27.3	Power Generation Design Basis	7.1-28
7.1.2.1.28	Drywell Purge System - Instrumentation and Controls	7.1-29
7.1.2.1.28.1	Safety Design Basis	7.1-29
7.1.2.1.28.2	Specific Regulatory Requirements	7.1-29
7.1.2.1.28.3	Power Generation Design Basis	7.1-30
7.1.2.1.29	Main Steam Line Isolation Control Valve-Leakage Control System (MSLIV-LCS) - Instrumentation and Controls	7.1-30
7.1.2.1.29.1	Safety Design Basis	7.1-30
7.1.2.1.29.2	Specific Regulatory Requirements	7.1-30
7.1.2.1.30	Not Used	7.1-31
7.1.2.1.31	Safety-Related Display - Instrumentation	7.1-31
7.1.2.1.31.1	Safety Design Basis	7.1-31
7.1.2.1.31.2	Specific Regulatory Requirements	7.1-31
7.1.2.1.31.3	Power Generation Design Basis	7.1-31
7.1.2.1.32	Diesel Fuel Oil-Instrumentation and Controls	7.1-31
7.1.2.1.32.1	Safety Design Basis	7.1-31
7.1.2.1.32.2	Specific Regulatory Requirements	7.1-31
7.1.2.1.33	Drywell Cooling System Instrumentation and Controls	7.1-31

TABLE OF CONTENTS (Cont'd)

		PAGE
7.1.2.1.33.1	Safety Design Basis	7.1-31
7.1.2.1.33.2	Specific Regulatory Requirements	7.1-32
7.1.2.1.33.3	Power Generation Design Basis	7.1-32
7.1.2.1.34	Radwaste Building HVAC - Instrumentation and Controls	7.1-32
7.1.2.1.34.1	Safety Design Basis	7.1-32
7.1.2.1.34.2	Specific Regulatory Requirements	7.1-32
7.1.2.1.34.3	Power Generation Design Basis	7.1-32
7.1.2.1.35	Containment Spray Cooling Mode (RHRS) – Instrumentation and Controls	7.1-33
7.1.2.1.35.1	Safety Design Basis	7.1-33
7.1.2.1.35.2	Specific Regulatory Requirements	7.1-33
7.1.2.1.35.3	Power Generation Design Basis	7.1-33
7.1.2.1.36	Remote Shutdown Instrumentation and Controls	7.1-33
7.1.2.1.36.1	Safety Design Bases	7.1-33
7.1.2.1.36.2	Specific Regulatory Requirements	7.1-33
7.1.2.1.37	Recirculation Pump Trip (RPT) Subsystem - Instrumentation and Controls	7.1-34
7.1.2.1.37.1	Safety Design	7.1-34
7.1.2.1.37.2	Specific Regulatory Requirements	7.1-34
7.1.2.1.38	Suppression Pool Cooling Mode – Instrumentation and Controls	7.1-34
7.1.2.1.38.1	Specific Regulatory Requirements	7.1-34
7.1.2.1.38.2	Safety Design Basis	7.1-34
7.1.2.1.38.3	Power Generation Design Basis	7.1-34
7.1.2.1.39	Suppression Pool Makeup System – Instrumentation and Controls	7.1-34
7.1.2.1.39.1	Safety Design Basis	7.1-34
7.1.2.1.39.2	Specific Regulatory Requirements	7.1-34
7.1.2.1.40	Diesel Generator Room Ventilation System Instrumentation and Controls	7.1-34
7.1.2.1.40.1	Safety Design Basis	7.1-35
7.1.2.1.40.2	Specific Regulatory Requirements	7.1-35
7.1.2.1.40.3	Power Generation Bases	7.1-35
7.1.2.1.41	Shutdown Service Water Pump Room Cooling System Instrumentation	7.1-35
7.1.2.1.41.1	Safety Design Bases	7.1-35
7.1.2.1.41.2	Specific Regulatory Requirements	7.1-36
7.1.2.1.41.3	Power Generation Design Bases	7.1-36
7.1.2.1.42	Essential Switchgear Heat Removal HVAC System Instrumentation and Controls	7.1-36
7.1.2.1.42.1	Safety Design Bases	7.1-36
7.1.2.1.42.2	Specific Regulatory Requirements	7.1-36
7.1.2.1.42.3	Power Generation Design Bases	7.1-37
7.1.2.1.43	ECCS Equipment Room HVAC System – Instrumentation and Controls	7.1-37
7.1.2.1.43.1	Safety Design Bases	7.1-37
7.1.2.1.43.2	Specific Regulatory Requirements	7.1-37

TABLE OF CONTENTS (Cont'd)

		PAGE
7.1.2.1.43.3	Power Generation Design Bases	7.1-37
7.1.2.1.44	Auxiliary Building HVAC System Instrumentation and Controls	7.1-37
7.1.2.1.44.1	Safety Design Bases	7.1-38
7.1.2.1.44.2	Specific Regulatory Requirements	7.1-38
7.1.2.1.44.3	Power Generation Design Bases	7.1-38
7.1.2.1.45	Fuel Building HVAC System Instrumentation and Controls	7.1-38
7.1.2.1.45.1	Safety Design Bases	7.1-38
7.1.2.1.45.2	Specific Regulatory Requirements	7.1-38
7.1.2.1.45.3	Power Generation Design Basis	7.1-38
7.1.2.1.46	Feedwater Leakage Control Mode (FWLC) Instrumentation and Controls	7.1-39
7.1.2.1.46.1	Safety Design Bases	7.1-39
7.1.2.1.46.2	Specific Regulatory Requirements	7.1-39
7.1.2.1.46.3	Power Generation Design Basis	7.1-39
7.1.2.2	Independence of Redundant Safety-Related Systems	7.1-39
7.1.2.2.1	Introduction	7.1-39
7.1.2.2.2	Mechanical Systems and Equipment	7.1-39
7.1.2.2.2.1	Emergency Core Cooling System (ECCS)	7.1-39
7.1.2.2.2.2	Other Cooling Systems	7.1-40
7.1.2.2.2.3	Containment System	7.1-40
7.1.2.2.2.4	Engineered Safety Feature Systems	7.1-40
7.1.2.2.3	Electrical Systems and Equipment	7.1-40
7.1.2.2.3.1	Reactor Protection (Trip) System (RPS)	7.1-40
7.1.2.2.3.2	Containment and Reactor Vessel Isolation Control System CRVICS)	7.1-40
7.1.2.2.3.3	Emergency Core Cooling System (ECCS)	7.1-41
7.1.2.2.3.4	Other Cooling Water Systems	7.1-41
7.1.2.2.3.5	Containment System	7.1-41
7.1.2.2.3.6	Emergency Power System	7.1-41
7.1.2.2.3.7	Engineered Safety Feature - Auxiliary Systems	7.1-42
7.1.2.2.4	Mechanical Systems Separation Criteria	7.1-42
7.1.2.2.4.1	General	7.1-42
7.1.2.2.4.1.1	Separation Techniques	7.1-43
7.1.2.2.4.2	System Separation	7.1-44
7.1.2.2.4.3	Physical Separation	7.1-44
7.1.2.2.5	Electrical Systems Separation Criteria	7.1-45
7.1.2.2.5.1	General	7.1-45
7.1.2.2.5.2	System Separation Requirements	7.1-45
7.1.2.2.5.2.1	Reactor Protection System (RPS)	7.1-45
7.1.2.2.5.2.2	Containment and Reactor Vessel Isolation Control System CRVICS)	7.1-46
7.1.2.2.5.2.3	Emergency Core Cooling System (ECCS)	7.1-47
7.1.2.2.5.2.4	Other Separation Considerations	7.1-47
7.1.2.3	Physical Identification of Safety-Related Equipment	7.1-48
7.1.2.4	Instrument Errors	7.1-48
7.1.2.5	Conformance to Industry Standards	7.1-49

TABLE OF CONTENTS (Cont'd)

		PAGE
7.1.2.5.1	Conformance to IEEE 279	7.1-49
7.1.2.5.2	Conformance to IEEE 308	7.1-49
7.1.2.5.3	Conformance to IEEE 317	7.1-49
7.1.2.5.4	Conformance to IEEE 323	7.1-49
7.1.2.5.5	Conformance to IEEE 336	7.1-49
7.1.2.5.6	Conformance to IEEE 338	7.1-49
7.1.2.5.7	Conformance to IEEE 344	7.1-49
7.1.2.5.8	Conformance to IEEE 379	7.1-50
7.1.2.5.9	Conformance to IEEE 384	7.1-50
7.1.2.5.10	Conformance to IEEE 387	7.1-50
7.1.2.6	Conformance to Regulatory Guides	7.1-50
7.1.2.6.1	Conformance to Regulatory Guide 1.6	7.1-50
7.1.2.6.2	Conformance to Regulatory Guide 1.9	7.1-50
7.1.2.6.3	Conformance to Regulatory Guide 1.11	7.1-50
7.1.2.6.4	Conformance to Regulatory Guide 1.21	7.1-51
7.1.2.6.5	Conformance to Regulatory Guide 1.22	7.1-51
7.1.2.6.6	Conformance to Regulatory Guide 1.29	7.1-51
7.1.2.6.7	Conformance to Regulatory Guide 1.30	7.1-51
7.1.2.6.8	Conformance to Regulatory Guide 1.32	7.1-51
7.1.2.6.9	Conformance to Regulatory Guide 1.40	7.1-51
7.1.2.6.10	Not Used	7.1-51
7.1.2.6.11	Conformance to Regulatory Guide 1.47	7.1-51
7.1.2.6.12	Conformance to Regulatory Guide 1.53	7.1-52
7.1.2.6.13	Conformance to Regulatory Guide 1.56	7.1-52
7.1.2.6.14	Conformance to Regulatory Guide 1.62	7.1-53
7.1.2.6.15	Conformance to Regulatory Guide 1.63	7.1-53
7.1.2.6.16	Conformance to Regulatory Guide 1.68	7.1-53
7.1.2.6.17	Conformance to Regulatory Guide 1.70	7.1-53
7.1.2.6.18	Conformance to Regulatory Guide 1.73	7.1-53
7.1.2.6.19	Conformance to Regulatory Guide 1.75	7.1-53
7.1.2.6.20	Conformance to Regulatory Guide 1.80	7.1-53
7.1.2.6.21	Conformance to Regulatory Guide 1.89	7.1-54
7.1.2.6.22	Conformance to Regulatory Guide 1.96	7.1-54
7.1.2.6.23	Conformance to Regulatory Guide 1.97	7.1-54
7.1.2.6.24	Conformance to Regulatory Guide 1.100	7.1-54
7.1.2.6.25	Regulatory Guide 1.105	7.1-54
7.1.2.6.26	Conformance to Regulatory Guide 1.118	7.1-54
7.1.2.7	Regulation Conformance - 10 CFR 50 Appendix A	7.1-56
7.1.2.7.1	GDC-1	7.1-56
7.1.2.7.2	GDC-2	7.1-56
7.1.2.7.3	GDC-3	7.1-56
7.1.2.7.4	GDC-4	7.1-56
7.1.2.7.5	GDC-5	7.1-56
7.1.2.7.6	GDC-19	7.1-56
7.1.2.7.7	GDC-29	7.1-56
7.1.2.7.8	GDC-30	7.1-56
7.1.2.7.9	GDC-33	7.1-57

TABLE OF CONTENTS (Cont'd)

		PAGE
7.1.2.8	Technical Design Bases	7.1-57
7.1.2.9	Safety System Setpoints	7.1-57
7.1.2.10	Analog Trip System	7.1-57
7.1.2.10.1	General Description	7.1-57
7.1.2.10.2	Evaluation	7.1-59
7.1.2.11	Non NSPS Trip Unit/Calibration System	7.1-59
7.1.2.11.1	General Description	7.1-59
7.1.2.11.2	Evaluation	7.1-60
7.1.2.11.3	Surveillance and Testing	7.1-60
7.2	REACTOR PROTECTION (TRIP) SYSTEM - INSTRUMENTATION AND CONTROLS	7.2-1
7.2.1	Description	7.2-1
7.2.1.1	System Description	7.2-1
7.2.1.1.1	Identification	7.2-1
7.2.1.1.2	Classification	7.2-1
7.2.1.1.3	Power Sources	7.2-1
7.2.1.1.3.1	120 Vac	7.2-1
7.2.1.1.3.2	125 Vdc	7.2-2
7.2.1.1.3.3	DC Logic Power	7.2-2
7.2.1.1.4	Equipment Design	7.2-2
7.2.1.1.4.1	General	7.2-2
7.2.1.1.4.2	Initiating Circuits	7.2-3
7.2.1.1.4.3	Logic	7.2-9
7.2.1.1.4.4	Scram Operating Process	7.2-9
7.2.1.1.4.4.1	Neutron Monitoring System	7.2-10
7.2.1.1.4.4.2	Turbine Stop Valve and Turbine Control Valve Test/Fast Closure	7.2-10
7.2.1.1.4.4.3	Main Steam Line Isolation Valves	7.2-10
7.2.1.1.4.4.4	Scram Discharge Volume Level	7.2-11
7.2.1.1.4.4.5	Mode Switch in Shutdown	7.2-11
7.2.1.1.4.4.6	Maintenance, Calibration or Test Bypasses	7.2-11
7.2.1.1.4.4.7	Interlocks	7.2-12
7.2.1.1.4.5	Redundancy and Diversity	7.2-12
7.2.1.1.4.6	Actuated Devices	7.2-13
7.2.1.1.4.7	Separation	7.2-14
7.2.1.1.4.8	Testability	7.2-14
7.2.1.1.4.9	Noise and Interference	7.2-18
7.2.1.1.5	Environmental Considerations	7.2-19
7.2.1.1.6	Operational Considerations	7.2-19
7.2.1.1.6.1	Reactor Operator Information	7.2-19
7.2.1.1.6.1.1	Indicators	7.2-19
7.2.1.1.6.1.2	Annunciators	7.2-20
7.2.1.1.6.1.3	Computer Alarms	7.2-20
7.2.1.1.6.2	Reactor Operator Controls	7.2-20
7.2.1.1.6.2.1	Mode Switch	7.2-20

TABLE OF CONTENTS (Cont'd)

		PAGE
7.2.1.1.6.3	Set Points	7.2-21
7.2.1.1.7	Containment Electrical Penetration Assignment	7.2-24
7.2.1.1.8	Cable Spreading Room Description	7.2-24
7.2.1.1.9	Main Control Room Area	7.2-24
7.2.1.1.10	Main Control Room Cabinets and Their Contents	7.2-24
7.2.1.1.11	Test Methods that Ensure RPS Reliability	7.2-24
7.2.1.1.12	Interlock Circuits to Inhibit Rod Motion as well as Vary the Protective Function	7.2-24
7.2.1.1.13	Support Cooling Systems, HVAC Systems Descriptions	7.2-24
7.2.1.2	Design Bases	7.2-25
7.2.1.2.1	Conditions	7.2-25
7.2.1.2.2	Variables	7.2-25
7.2.1.2.3	Sensors	7.2-25
7.2.1.2.4	Operational Limits	7.2-25
7.2.1.2.5	Margin Between Operational Limits	7.2-25
7.2.1.2.6	Levels Requiring Protective Action	7.2-25
7.2.1.2.7	Ranges of Energy Supply and Environmental Conditions	7.2-25
7.2.1.2.8	Unusual Events	7.2-26
7.2.1.2.9	Performance Requirements	7.2-27
7.2.1.3	Final System Drawings	7.2-27
7.2.2	Analysis	7.2-28
7.2.2.1	Reactor Protection (Trip) System Instrumentation and Controls	7.2-28
7.2.2.1.1	General Functional Requirements Conformance	7.2-28
7.2.2.1.1.1	Conformance to Design Basis Requirements	7.2-28
7.2.2.1.1.1.1	Design Bases 7.1.2.1.1.1.1(1)	7.2-28
7.2.2.1.1.1.2	Design Basis 7.1.2.1.1.1.1(2)	7.2-28
7.2.2.1.1.1.3	Design Basis 7.1.2.1.1.1.1(3)	7.2-29
7.2.2.1.1.1.4	Design Basis 7.1.2.1.1.1.1(4)	7.2-29
7.2.2.1.1.1.5	Design Basis 7.1.2.1.1.1.1(5)	7.2-29
7.2.2.1.1.1.6	Design Basis 7.1.2.1.1.1.1(6)	7.2-30
7.2.2.1.1.1.7	Design Basis 7.1.2.1.1.1.1(7a through 7h)	7.2-30
7.2.2.1.1.1.8	Design Basis 7.1.2.1.1.1.1(8)	7.2-31
7.2.2.1.1.1.9	Other Design Basis Requirements	7.2-31
7.2.2.1.1.1.9.1	Other Considerations	7.2-32
7.2.2.1.2	Conformance to Specific Regulatory Requirements	7.2-33
7.2.2.1.2.1	Conformance to NRC Regulatory Guides	7.2-33
7.2.2.1.2.1.1	Regulatory Guide 1.11	7.2-33
7.2.2.1.2.1.2	Regulatory Guide 1.22	7.2-33
7.2.2.1.2.1.3	Regulatory Guide 1.29	7.2-33
7.2.2.1.2.1.4	Regulatory Guide 1.30	7.2-33
7.2.2.1.2.1.5	Regulatory Guide 1.47	7.2-33
7.2.2.1.2.1.6	Regulatory Guide 1.53	7.2-34
7.2.2.1.2.1.7	Regulatory Guide 1.62	7.2-34
7.2.2.1.2.1.8	Regulatory Guide 1.63	7.2-34
7.2.2.1.2.1.9	Regulatory Guide 1.68	7.2-34
7.2.2.1.2.1.10	Regulatory Guide 1.75	7.2-34

TABLE OF CONTENTS (Cont'd)

		PAGE
7.2.2.1.2.1.11	Regulatory Guide 1.89	7.2-35
7.2.2.1.2.1.12	Regulatory Guide 1.97	7.2-35
7.2.2.1.2.1.13	Regulatory Guide 1.100	7.2-35
7.2.2.1.2.1.14	Regulatory Guide 1.105	7.2-35
7.2.2.1.2.1.15	Regulatory Guide 1.118	7.2-35
7.2.2.1.2.2	Conformance to 10 CFR 50, Appendix A – General Design Criteria	7.2-35
7.2.2.1.2.2.1	General Design Criterion 1	7.2-35
7.2.2.1.2.2.2	General Design Criterion 2	7.2-36
7.2.2.1.2.2.3	General Design Criterion 3	7.2-36
7.2.2.1.2.2.4	General Design Criterion 10	7.2-36
7.2.2.1.2.2.5	General Design Criterion 13	7.2-36
7.2.2.1.2.2.6	General Design Criterion 15	7.2-36
7.2.2.1.2.2.7	General Design Criterion 19	7.2-36
7.2.2.1.2.2.8	General Design Criterion 20	7.2-36
7.2.2.1.2.2.9	General Design Criterion 21	7.2-37
7.2.2.1.2.2.10	General Design Criterion 22	7.2-37
7.2.2.1.2.2.11	General Design Criterion 23	7.2-37
7.2.2.1.2.2.12	General Design Criterion 24	7.2-37
7.2.2.1.2.2.13	General Design Criterion 25	7.2-37
7.2.2.1.2.2.14	General Design Criterion 29	7.2-37
7.2.2.1.2.3	Conformance with Industry Codes and Standards	7.2-37
7.2.2.1.2.3.1	IEEE 279	7.2-37
7.2.2.1.2.3.1.1	General Functional Requirement (IEEE 279, Paragraph 4.1)	7.2-38
7.2.2.1.2.3.1.2	Single Failure Criterion (IEEE 279, Paragraph 4.2)	7.2-39
7.2.2.1.2.3.1.3	Quality of Components and Modules (IEEE 279,Paragraph 4.3)	7.2-40
7.2.2.1.2.3.1.4	Equipment Qualification (IEEE 279, Paragraph 4.4)	7.2-41
7.2.2.1.2.3.1.5	Channel Integrity (IEEE 279, Paragraph 4.5)	7.2-41
7.2.2.1.2.3.1.6	Channel Independence (IEEE 279, Paragraph 4.6)	7.2-41
7.2.2.1.2.3.1.7	Control and Protection System Interaction (IEEE 279, Paragraph 4.7)	7.2-42
7.2.2.1.2.3.1.8	Derivation of System Inputs (IEEE 279, Paragraph 4.8)	7.2-44
7.2.2.1.2.3.1.9	Capability for Sensor Checks (IEEE 279, Paragraph 4.9)	7.2-45
7.2.2.1.2.3.1.10	Capability for Test and Calibration (IEEE 279, Paragraph 4.10)	7.2-46
7.2.2.1.2.3.1.11	Channel Bypass or Removal from Operation (IEEE 279, Paragraph 4.11)	7.2-48
7.2.2.1.2.3.1.12	Operating Bypasses (IEEE 279, Paragraph 4.12)	7.2-48
7.2.2.1.2.3.1.13	Indication of Bypasses (IEEE 279, Paragraph 4.13)	7.2-49
7.2.2.1.2.3.1.14	Access to Means for Bypassing (IEEE 279, Paragraph 4.14)	7.2-50
7.2.2.1.2.3.1.15	Multiple Set Points (IEEE 279, Paragraph 4.15)	7.2-50
7.2.2.1.2.3.1.16	Completion of Protective Action Once it is Initiated (IEEE 279, Paragraph 4.16)	7.2-51
7.2.2.1.2.3.1.17	Manual Actuation (IEEE 279, Paragraph 4.17)	7.2-52
7.2.2.1.2.3.1.18	Access to Set Point Adjustments, Calibration and Test Points (IEEE 279, Paragraph 4.18)	7.2-52
7.2.2.1.2.3.1.19	Identification of Protective Actions (IEEE 279, Paragraph 4.19)	7.2-53
7.2.2.1.2.3.1.20	Information Readout (IEEE 279, Paragraph 4.20)	7.2-53

TABLE OF CONTENTS (Cont'd)

		PAGE
7.2.2.1.2.3.1.21	System Repair (IEEE 279, Paragraph 4.21)	7.2-54
7.2.2.1.2.3.1.22	Identification of Protection Systems (IEEE 279, Paragraph 4.22)	7.2-55
7.2.2.1.2.3.2	IEEE 308, Standard Criteria for Class 1E Power Systems for Nuclear Power Generating Stations	7.2-55
7.2.2.1.2.3.3	IEEE 317, Electric Penetration Assemblies in Containment Structures for Nuclear Power Generating Stations	7.2-55
7.2.2.1.2.3.4	IEEE 323, Standard for Qualifying Class 1E Equipment for Nuclear Power Generating Stations	7.2-55
7.2.2.1.2.3.5	IEEE 336, Installation, Inspection, and Testing Requirements for Instrumentation and Electrical Equipment During the Construction of Nuclear Power Generating Stations	7.2-55
7.2.2.1.2.3.6	IEEE 338, Standard Criteria for Periodic Testing of Nuclear Power Generating Station Safety Systems	7.2-55
7.2.2.1.2.3.7	IEEE 344, Recommended Practices for Seismic Qualification of Class 1E Equipment for Nuclear Power Generating Stations	7.2-56
7.2.2.1.2.3.8	IEEE 379, Standard Application of the Single-Failure Criterion to Nuclear Power Generating Station Class 1E System	7.2-56
7.2.2.1.2.3.9	IEEE 384, Standard Criteria for Independence of Class 1E Equipment and Circuits	7.2-56
7.2.2.1.3	Additional Design Considerations Analyses	7.2-56
7.2.2.1.3.1	Spurious Rod Withdrawals	7.2-56
7.2.2.1.3.2	Loss of Plant Instrument Air System	7.2-57
7.2.2.1.3.3	Loss of Cooling Water to Vital Equipment	7.2-57
7.2.2.1.3.4	Plant Load Rejection	7.2-57
7.2.2.1.3.5	Turbine Trip	7.2-57
7.2.3	References	7.2-57
7.3	ENGINEERED SAFETY FEATURE SYSTEMS	7.3-1
7.3.1	Description	7.3-1
7.3.1.1	System Description	7.3-1
7.3.1.1.1	Emergency Core Cooling System (ECCS) – Instrumentation and Controls	7.3-1
7.3.1.1.1.1	System Identification	7.3-1
7.3.1.1.1.2	Network Power Sources	7.3-2
7.3.1.1.1.3	High Pressure Core Spray (HPCS) System – Instrumentation and Controls	7.3-2
7.3.1.1.1.3.1	System Identification	7.3-2
7.3.1.1.1.3.2	Power Sources	7.3-2
7.3.1.1.1.3.3	Equipment Design	7.3-2
7.3.1.1.1.3.4	Initiating Circuits	7.3-3
7.3.1.1.1.3.5	Logic and Sequencing	7.3-3
7.3.1.1.1.3.6	Bypasses and Interlocks	7.3-4
7.3.1.1.1.3.7	Redundancy and Diversity	7.3-4
7.3.1.1.1.3.8	Actuated Devices	7.3-4
7.3.1.1.1.3.9	Separation	7.3-5
7.3.1.1.1.3.9.1	General	7.3-5

TABLE OF CONTENTS (Cont'd)

		PAGE
7.3.1.1.1.3.9.2	Separation	7.3-5
7.3.1.1.1.3.10	Testability	7.3-5
7.3.1.1.1.3.11	Environmental Considerations	7.3-6
7.3.1.1.1.3.12	Operational Considerations	7.3-6
7.3.1.1.1.3.12.1	General Information	7.3-6
7.3.1.1.1.3.12.2	Reactor Operator Information	7.3-6
7.3.1.1.1.3.12.3	Set Points	7.3-6
7.3.1.1.1.4	Automatic Depressurization System (ADS) – Instrumentation and Controls	7.3-6
7.3.1.1.1.4.1	System Identification	7.3-6
7.3.1.1.1.4.1.1	Equipment Design	7.3-6
7.3.1.1.1.4.1.2	Initiating Circuits	7.3-7
7.3.1.1.1.4.1.3	Logic and Sequencing	7.3-8
7.3.1.1.1.4.1.4	Bypasses and Interlocks	7.3-9
7.3.1.1.1.4.1.5	Redundancy and Diversity	7.3-9
7.3.1.1.1.4.1.6	Actuated Devices	7.3-9
7.3.1.1.1.4.1.7	Separation	7.3-10
7.3.1.1.1.4.1.8	Testability	7.3-10
7.3.1.1.1.4.1.9	Environmental Considerations	7.3-10
7.3.1.1.1.4.1.10	Operational Considerations	7.3-11
7.3.1.1.1.4.1.10.1	General Information	7.3-11
7.3.1.1.1.4.1.10.2	Reactor Operator Information	7.3-11
7.3.1.1.1.4.1.10.3	Set Points	7.3-11
7.3.1.1.1.4.2	Safety-Relief Valve Subsystem	7.3-11
7.3.1.1.1.4.2.1	Equipment Design	7.3-11
7.3.1.1.1.4.2.2	Initiating Circuits	7.3-12
7.3.1.1.1.4.2.3	Logic and Sequencing	7.3-12
7.3.1.1.1.4.2.4	Redundancy and Diversity	7.3-12
7.3.1.1.1.4.2.5	Actuated Devices	7.3-12
7.3.1.1.1.4.2.6	Bypasses and Interlocks	7.3-13
7.3.1.1.1.4.2.7	Testability	7.3-14
7.3.1.1.1.4.2.8	Environmental Considerations	7.3-14
7.3.1.1.1.5	Low Pressure Core Spray (LPCS) – Instrumentation and Controls	7.3-14
7.3.1.1.1.5.1	System Identification	7.3-14
7.3.1.1.1.5.2	Equipment Design	7.3-14
7.3.1.1.1.5.3	Power Sources	7.3-14
7.3.1.1.1.5.4	Initiating Circuits	7.3-14
7.3.1.1.1.5.5	Logic and Sequencing	7.3-15
7.3.1.1.1.5.6	Bypasses and Interlocks	7.3-15
7.3.1.1.1.5.7	Redundancy and Diversity	7.3-15
7.3.1.1.1.5.8	Actuated Devices	7.3-16
7.3.1.1.1.5.9	Separation	7.3-16
7.3.1.1.1.5.10	Testability	7.3-16
7.3.1.1.1.5.11	Environmental Considerations	7.3-17
7.3.1.1.1.5.12	Operational Considerations	7.3-17
7.3.1.1.1.5.12.1	General Information	7.3-17

TABLE OF CONTENTS (Cont'd)

		PAGE
7.3.1.1.1.5.12.2	Reactor Operator Information	7.3-17
7.3.1.1.1.5.12.3	Set Points	7.3-17
7.3.1.1.1.6	Low Pressure Coolant Injection (LPCI) – Instrumentation and Controls	7.3-17
7.3.1.1.1.6.1	System Identification	7.3-17
7.3.1.1.1.6.2	Equipment Design	7.3-17
7.3.1.1.1.6.3	Initiating Circuits	7.3-18
7.3.1.1.1.6.4	Logic and Sequencing	7.3-19
7.3.1.1.1.6.5	Bypasses and Interlocks	7.3-19
7.3.1.1.1.6.6	Redundancy and Diversity	7.3-19
7.3.1.1.1.6.7	Actuated Device	7.3-19
7.3.1.1.1.6.8	Separation	7.3-20
7.3.1.1.1.6.9	Testability	7.3-20
7.3.1.1.1.6.10	Environmental Considerations	7.3-21
7.3.1.1.1.6.11	Operational Considerations	7.3-21
7.3.1.1.1.6.11.1	General Information	7.3-21
7.3.1.1.1.6.11.2	Reactor Operator Information	7.3-21
7.3.1.1.1.6.11.3	Set Points	7.3-21
7.3.1.1.2	Containment and Reactor Vessel Isolation Control System (CRVICS) - Instrumentation and Controls	7.3-21
7.3.1.1.2.1	System Identification	7.3-21
7.3.1.1.2.2	System Power Sources	7.3-22
7.3.1.1.2.3	System Equipment Design	7.3-22
7.3.1.1.2.4	System Initiating Circuits	7.3-22
7.3.1.1.2.4.1	Isolation Functions and Settings	7.3-23
7.3.1.1.2.4.1.1	Reactor Vessel Low Water Level	7.3-23
7.3.1.1.2.4.1.1.1	Identification	7.3-23
7.3.1.1.2.4.1.1.2	Power Supplies	7.3-24
7.3.1.1.2.4.1.1.3	Initiating Circuits	7.3-25
7.3.1.1.2.4.1.1.4	Logic and Sequencing	7.3-25
7.3.1.1.2.4.1.1.5	Redundancy and Diversity	7.3-25
7.3.1.1.2.4.1.1.6	Bypasses and Interlocks	7.3-25
7.3.1.1.2.4.1.1.7	Testability	7.3-25
7.3.1.1.2.4.1.2	Deleted	7.3-26
7.3.1.1.2.4.1.3	Main Steam Line-Area High Ambient Temperature	7.3-26
7.3.1.1.2.4.1.3.1	Identification	7.3-26
7.3.1.1.2.4.1.3.2	Power Supplies	7.3-26
7.3.1.1.2.4.1.3.3	Initiating Circuits	7.3-26
7.3.1.1.2.4.1.3.4	Logic and Sequencing	7.3-27
7.3.1.1.2.4.1.3.5	Redundancy and Diversity	7.3-27
7.3.1.1.2.4.1.3.6	Subsystem Bypasses and Interlocks	7.3-27
7.3.1.1.2.4.1.3.7	Testability	7.3-27
7.3.1.1.2.4.1.4	Main Steam Line-High Flow	7.3-27
7.3.1.1.2.4.1.4.1	Identification	7.3-27
7.3.1.1.2.4.1.4.2	Power Supplies	7.3-28
7.3.1.1.2.4.1.4.3	Subsystem Initiating Circuits	7.3-28
7.3.1.1.2.4.1.4.4	Logic and Sequencing	7.3-28

TABLE OF CONTENTS (Cont'd)

		PAGE
7.3.1.1.2.4.1.4.5	Redundancy and Diversity	7.3-28
7.3.1.1.2.4.1.4.6	Subsystem Bypasses and Interlocks	7.3-28
7.3.1.1.2.4.1.4.7	Subsystem Testability	7.3-29
7.3.1.1.2.4.1.5	Main Turbine Inlet - Low Steam Pressure	7.3-29
7.3.1.1.2.4.1.5.1	Identification	7.3-29
7.3.1.1.2.4.1.5.2	Power Supplies	7.3-29
7.3.1.1.2.4.1.5.3	Initiating Circuits	7.3-29
7.3.1.1.2.4.1.5.4	Logic and Sequencing	7.3-29
7.3.1.1.2.4.1.5.5	Redundancy and Diversity	7.3-30
7.3.1.1.2.4.1.5.6	Bypasses and Interlocks	7.3-30
7.3.1.1.2.4.1.5.7	Testability	7.3-30
7.3.1.1.2.4.1.6	Drywell High Pressure	7.3-30
7.3.1.1.2.4.1.6.1	Identification	7.3-30
7.3.1.1.2.4.1.6.2	Subsystem Power Supplies	7.3-30
7.3.1.1.2.4.1.6.3	Initiating Circuits	7.3-30
7.3.1.1.2.4.1.6.4	Logic and Sequencing	7.3-31
7.3.1.1.2.4.1.6.5	Redundancy and Diversity	7.3-31
7.3.1.1.2.4.1.6.6	Bypasses and Interlocks	7.3-31
7.3.1.1.2.4.1.6.7	Testability	7.3-31
7.3.1.1.2.4.1.7	Not Used	7.3-31
7.3.1.1.2.4.1.8	Not Used	7.3-31
7.3.1.1.2.4.1.9	Reactor Water Cleanup (RWCU) System-High Differential Flow	7.3-31
7.3.1.1.2.4.1.9.1	Identification	7.3-31
7.3.1.1.2.4.1.9.2	Power Supplies	7.3-31
7.3.1.1.2.4.1.9.3	Initiating Circuits	7.3-32
7.3.1.1.2.4.1.9.4	Logic and Sequencing	7.3-32
7.3.1.1.2.4.1.9.5	Redundancy and Diversity	7.3-32
7.3.1.1.2.4.1.9.6	Bypasses and Interlocks	7.3-32
7.3.1.1.2.4.1.9.7	Testability	7.3-33
7.3.1.1.2.4.1.10	Reactor Water Cleanup (RWCU) System-Area High Temperature	7.3-33
7.3.1.1.2.4.1.10.1	Identification	7.3-33
7.3.1.1.2.4.1.10.2	Subsystem Power Supplies	7.3-33
7.3.1.1.2.4.1.10.3	Subsystem Initiating Circuits	7.3-33
7.3.1.1.2.4.1.10.4	Logic and Sequencing	7.3-33
7.3.1.1.2.4.1.10.5	Redundancy and Diversity	7.3-34
7.3.1.1.2.4.1.10.6	Bypasses and Interlocks	7.3-34
7.3.1.1.2.4.1.10.7	Testability	7.3-34
7.3.1.1.2.4.1.11	RHR System-Area High Temperature	7.3-34
7.3.1.1.2.4.1.11.1	Identification	7.3-34
7.3.1.1.2.4.1.11.2	Power Supplies	7.3-34
7.3.1.1.2.4.1.11.3	Initiating Circuits	7.3-34
7.3.1.1.2.4.1.11.4	Subsystem Logic and Sequencing	7.3-35
7.3.1.1.2.4.1.11.5	Subsystem Redundancy and Diversity	7.3-35
7.3.1.1.2.4.1.11.6	Subsystem Bypasses and Interlocks	7.3-35
7.3.1.1.2.4.1.11.7	Testability	7.3-35
7.3.1.1.2.4.1.12	Not Used	7.3-35

TABLE OF CONTENTS (Cont'd)

		PAGE
7.3.1.1.2.4.1.13	Not Used	7.3-35
7.3.1.1.2.4.1.14	Main Condenser Vacuum Trip	7.3-35
7.3.1.1.2.4.1.14.1	Identification	7.3-35
7.3.1.1.2.4.1.14.2	Power Supplies	7.3-36
7.3.1.1.2.4.1.14.3	Initiating Circuits	7.3-36
7.3.1.1.2.4.1.14.4	Logic and Sequencing	7.3-36
7.3.1.1.2.4.1.14.5	Redundancy and Diversity	7.3-36
7.3.1.1.2.4.1.14.6	Bypasses and Interlocks	7.3-36
7.3.1.1.2.4.1.14.7	Testability	7.3-36
7.3.1.1.2.4.1.15	Manual Isolation (System Level)	7.3-37
7.3.1.1.2.4.1.15.1	Identification	7.3-37
7.3.1.1.2.4.1.15.2	Power Sources	7.3-37
7.3.1.1.2.4.1.15.3	Initiating Circuits	7.3-37
7.3.1.1.2.4.1.15.4	Logic and Sequencing	7.3-37
7.3.1.1.2.4.1.15.5	Bypasses and Interlocks	7.3-37
7.3.1.1.2.4.1.15.6	Redundancy and Diversity	7.3-37
7.3.1.1.2.4.1.15.7	Testability	7.3-37
7.3.1.1.2.4.1.15.8	Environmental Considerations	7.3-37
7.3.1.1.2.4.1.15.9	Operational Considerations	7.3-37
7.3.1.1.2.4.2	System Instrumentation	7.3-38
7.3.1.1.2.5	System Logic	7.3-38
7.3.1.1.2.6	System Sequencing	7.3-39
7.3.1.1.2.7	System Bypasses and Interlocks	7.3-39
7.3.1.1.2.8	System Redundancy and Diversity	7.3-39
7.3.1.1.2.9	System Actuated Devices	7.3-39
7.3.1.1.2.10	System Separation	7.3-40
7.3.1.1.2.11	System Testability	7.3-40
7.3.1.1.2.12	System Environmental Considerations	7.3-41
7.3.1.1.2.13	System Operational Considerations	7.3-41
7.3.1.1.2.13.1	General Information	7.3-42
7.3.1.1.2.13.2	Reactor Operator Information	7.3-42
7.3.1.1.2.13.3	Set Points	7.3-42
7.3.1.1.3	MSIV-LCS - Instrumentation and Controls	7.3-42
7.3.1.1.3.1	System Identification	7.3-42
7.3.1.1.3.2	Power Sources	7.3-43
7.3.1.1.3.3	Equipment Design	7.3-43
7.3.1.1.3.4	Initiating Circuits	7.3-43
7.3.1.1.3.5	Logic and Sequencing	7.3-43
7.3.1.1.3.6	Bypasses and Interlocks	7.3-44
7.3.1.1.3.7	Redundancy and Diversity	7.3-44
7.3.1.1.3.8	Actuated Devices	7.3-44
7.3.1.1.3.9	Separation	7.3-44
7.3.1.1.3.10	Testability	7.3-44
7.3.1.1.3.11	Environmental Conditions	7.3-44
7.3.1.1.3.12	Operational Considerations	7.3-44
7.3.1.1.3.12.1	General Information	7.3-44
7.3.1.1.3.12.2	Operator Information	7.3-45

TABLE OF CONTENTS (Cont'd)

		PAGE
7.3.1.1.3.12.3	Set Points	7.3-45
7.3.1.1.4	RHR/Containment Spray Cooling Mode – Instrumentation and Controls	7.3-45
7.3.1.1.4.1	System Identification	7.3-45
7.3.1.1.4.2	Power Sources	7.3-45
7.3.1.1.4.3	Equipment Design	7.3-45
7.3.1.1.4.4	Initiating Circuits	7.3-46
7.3.1.1.4.4.1	Containment Spray A	7.3-46
7.3.1.1.4.4.2	Containment Spray B	7.3-46
7.3.1.1.4.5	Logic and Sequencing	7.3-46
7.3.1.1.4.6	Bypasses and Interlocks	7.3-47
7.3.1.1.4.7	Redundancy and Diversity	7.3-47
7.3.1.1.4.8	Actuated Devices	7.3-47
7.3.1.1.4.9	Separation	7.3-47
7.3.1.1.4.10	Testability	7.3-47
7.3.1.1.4.11	Environmental Considerations	7.3-48
7.3.1.1.4.12	Operational Considerations	7.3-48
7.3.1.1.4.12.1	General Information	7.3-48
7.3.1.1.4.12.2	Reactor Operator Information	7.3-48
7.3.1.1.4.12.3	Set Points	7.3-48
7.3.1.1.5	Shutdown Service Water System Instrumentation and Controls	7.3-48
7.3.1.1.5.1	System Identification	7.3-48
7.3.1.1.5.2	Power Sources	7.3-48
7.3.1.1.5.3	Equipment Design	7.3-48
7.3.1.1.5.4	Initiating Circuits	7.3-49
7.3.1.1.5.5	Logic and Sequencing	7.3-49
7.3.1.1.5.6	Bypasses and Interlocks	7.3-49
7.3.1.1.5.7	Redundancy and Diversity	7.3-50
7.3.1.1.5.8	Actuated Devices	7.3-50
7.3.1.1.5.9	Separation	7.3-50
7.3.1.1.5.10	Testability	7.3-51
7.3.1.1.5.11	Environmental Considerations	7.3-51
7.3.1.1.5.12	Operational Considerations	7.3-51
7.3.1.1.6	Main Control Room HVAC Control System – Instrumentation and Controls	7.3-51
7.3.1.1.6.1	Power Supply	7.3-51
7.3.1.1.6.2	Initiating Circuits, Logic, and Sequencing	7.3-51
7.3.1.1.6.3	Bypass and Interlocks	7.3-53
7.3.1.1.6.4	Redundancy/Diversity	7.3-54
7.3.1.1.6.5	Actuated Devices	7.3-54
7.3.1.1.6.6	Separation	7.3-54
7.3.1.1.6.7	Testability	7.3-54
7.3.1.1.6.7.1	Sensor Checks	7.3-55
7.3.1.1.6.7.2	Module Checks	7.3-55
7.3.1.1.6.7.3	Channel Checks	7.3-55
7.3.1.1.6.7.4	System Checks	7.3-55

TABLE OF CONTENTS (Cont'd)

		PAGE
7.3.1.1.6.8	Environmental Considerations	7.3-55
7.3.1.1.6.9	Operational Considerations	7.3-55
7.3.1.1.6.10	Supporting Systems	7.3-56
7.3.1.1.7	Combustible Gas Control System (CGCS)	7.3-56
7.3.1.1.7.1	System Identification	7.3-56
7.3.1.1.7.2	Initiating Circuits	7.3-57
7.3.1.1.7.3	Logic and Sequencing	7.3-57
7.3.1.1.7.4	Bypasses and Interlocks	7.3-57
7.3.1.1.7.5	Redundancy and Diversity	7.3-57
7.3.1.1.7.6	Actuated Devices	7.3-58
7.3.1.1.7.7	Separation	7.3-58
7.3.1.1.7.8	Testability	7.3-58
7.3.1.1.7.9	Environmental Conditions	7.3-58
7.3.1.1.7.10	Operational Considerations	7.3-58
7.3.1.1.8	Standby Power Systems Instrumentation and Controls	7.3-58
7.3.1.1.9	Standby Gas Treatment System – Instrumentation and Controls	7.3-58
7.3.1.1.9.1	Power Supply	7.3-58
7.3.1.1.9.2	Initiating Circuits, Logic, and Sequencing	7.3-59
7.3.1.1.9.3	Bypasses and Interlocks	7.3-59
7.3.1.1.9.4	Redundancy/Diversity	7.3-60
7.3.1.1.9.5	Actuated Devices	7.3-60
7.3.1.1.9.6	Separation	7.3-60
7.3.1.1.9.7	Testability	7.3-60
7.3.1.1.9.7.1	Sensor Checks	7.3-60
7.3.1.1.9.7.2	Module Checks	7.3-61
7.3.1.1.9.7.3	Channel Checks	7.3-61
7.3.1.1.9.7.4	System Checks	7.3-61
7.3.1.1.9.8	Environmental Considerations	7.3-61
7.3.1.1.9.9	Operational Considerations	7.3-61
7.3.1.1.9.10	Supporting Systems	7.3-61
7.3.1.1.10	Suppression Pool Makeup System	7.3-62
7.3.1.1.10.1	System Identification	7.3-62
7.3.1.1.10.2	Equipment Design	7.3-62
7.3.1.1.10.3	Power Sources	7.3-62
7.3.1.1.10.4	Initiating Circuits	7.3-62
7.3.1.1.10.5	Logic and Sequencing	7.3-63
7.3.1.1.10.6	Bypasses and Interlocks	7.3-63
7.3.1.1.10.7	Redundancy and Diversity	7.3-63
7.3.1.1.10.8	Actuated Devices	7.3-63
7.3.1.1.10.9	Separation	7.3-63
7.3.1.1.10.10	Testability	7.3-63
7.3.1.1.10.11	Environmental Conditions	7.3-63
7.3.1.1.10.12	Operational Considerations	7.3-64
7.3.1.1.11	Diesel Fuel Oil - Instrumentation and Controls	7.3-64
7.3.1.1.11.1	System Identification	7.3-64
7.3.1.1.11.2	Power Sources	7.3-64

TABLE OF CONTENTS (Cont'd)

		PAGE
7.3.1.1.11.3	Equipment Design	7.3-64
7.3.1.1.11.4	Initiating Circuits	7.3-64
7.3.1.1.11.5	Logic and Sequencing	7.3-64
7.3.1.1.11.6	Bypasses and Interlocks	7.3-65
7.3.1.1.11.7	Redundancy and Diversity	7.3-65
7.3.1.1.11.8	Actuated Devices	7.3-65
7.3.1.1.11.9	Separation	7.3-65
7.3.1.1.11.10	Testability	7.3-65
7.3.1.1.11.11	Environmental Considerations	7.3-65
7.3.1.1.11.12	Operational Considerations	7.3-65
7.3.1.1.11.12.1	General Information	7.3-65
7.3.1.1.11.12.2	Reactor Operator Information	7.3-66
7.3.1.1.11.12.3	Set Points	7.3-66
7.3.1.1.12	Diesel Generator Room HVAC System – Instrumentation and Controls	7.3-66
7.3.1.1.12.1	Power Supply	7.3-66
7.3.1.1.12.2	Initiating Circuits, Logic and Sequencing	7.3-66
7.3.1.1.12.3	Bypasses and Interlocks	7.3-67
7.3.1.1.12.4	Redundancy/Diversity	7.3-67
7.3.1.1.12.5	Actuated Devices	7.3-67
7.3.1.1.12.6	Separation	7.3-67
7.3.1.1.12.7	Testability	7.3-67
7.3.1.1.12.7.1	Sensor Checks	7.3-67
7.3.1.1.12.7.2	Module Checks	7.3-68
7.3.1.1.12.7.3	Channel Checks	7.3-68
7.3.1.1.12.7.4	System Checks	7.3-68
7.3.1.1.12.8	Environmental Considerations	7.3-68
7.3.1.1.12.9	Operational Considerations	7.3-68
7.3.1.1.12.10	Supporting Systems	7.3-69
7.3.1.1.13	Shutdown Service Water Pump Room Ventilation System - Instrumentation and Controls	7.3-69
7.3.1.1.13.1	Power Supply	7.3-69
7.3.1.1.13.2	Initiating Circuits, Logic, and Sequencing	7.3-69
7.3.1.1.13.3	Bypasses and Interlocks	7.3-69
7.3.1.1.13.4	Redundancy/Diversity	7.3-69
7.3.1.1.13.5	Actuated Devices	7.3-70
7.3.1.1.13.6	Separation	7.3-70
7.3.1.1.13.7	Testability	7.3-70
7.3.1.1.13.7.1	Sensor Checks	7.3-70
7.3.1.1.13.7.2	Module Checks	7.3-70
7.3.1.1.13.7.3	Channel Checks	7.3-70
7.3.1.1.13.7.4	System Checks	7.3-71
7.3.1.1.13.8	Environmental Considerations	7.3-71
7.3.1.1.13.9	Operational Considerations	7.3-71
7.3.1.1.13.10	Supporting Systems	7.3-71
7.3.1.1.14	Essential Switchgear Heat Removal HVAC System - Instrumentation and Controls	7.3-71

TABLE OF CONTENTS (Cont'd)

		PAGE
7.3.1.1.14.1	Power Supply	7.3-71
7.3.1.1.14.2	Initiating Circuits, Logic, and Sequencing	7.3-71
7.3.1.1.14.3	Bypasses and Interlocks	7.3-72
7.3.1.1.14.4	Redundancy/Diversity	7.3-73
7.3.1.1.14.5	Actuated Devices	7.3-73
7.3.1.1.14.6	Separation	7.3-73
7.3.1.1.14.7	Testability	7.3-73
7.3.1.1.14.7.1	Sensor Checks	7.3-73
7.3.1.1.14.7.2	Module Checks	7.3-74
7.3.1.1.14.7.3	Channel Checks	7.3-74
7.3.1.1.14.7.4	System Checks	7.3-74
7.3.1.1.14.8	Environmental Considerations	7.3-74
7.3.1.1.14.9	Operational Considerations	7.3-74
7.3.1.1.15	ECCS Equipment Room HVAC System – Instrumentation and Controls	7.3-74
7.3.1.1.15.1	Power Supply	7.3-74
7.3.1.1.15.2	Initiating Circuits, Logic, and Sequencing	7.3-74
7.3.1.1.15.3	Bypasses and Interlocks	7.3-75
7.3.1.1.15.4	Redundancy/Diversity	7.3-75
7.3.1.1.15.5	Actuated Devices	7.3-75
7.3.1.1.15.6	Separation	7.3-75
7.3.1.1.15.7	Testability	7.3-75
7.3.1.1.15.7.1	Sensor Checks	7.3-75
7.3.1.1.15.7.2	Module Checks	7.3-76
7.3.1.1.15.7.3	Channel Checks	7.3-76
7.3.1.1.15.7.4	System Checks	7.3-76
7.3.1.1.15.8	Environment Considerations	7.3-76
7.3.1.1.15.9	Operational Considerations	7.3-76
7.3.1.1.16	Suppression Pool Cooling Mode (RHR) – Instrumentation and Controls	7.3-76
7.3.1.1.16.1	System Identification	7.3-76
7.3.1.1.16.2	Power Sources	7.3-77
7.3.1.1.16.3	Equipment Design	7.3-77
7.3.1.1.16.4	Initiating Circuits	7.3-77
7.3.1.1.16.5	Logic and Sequencing	7.3-77
7.3.1.1.16.6	Bypasses and Interlocks	7.3-77
7.3.1.1.16.7	Redundancy and Diversity	7.3-78
7.3.1.1.16.8	Actuated Devices	7.3-78
7.3.1.1.16.9	Separation	7.3-78
7.3.1.1.16.10	Testability	7.3-78
7.3.1.1.16.11	Environmental Considerations	7.3-78
7.3.1.1.16.12	Operational Considerations	7.3-78
7.3.1.1.16.12.1	General Information	7.3-78
7.3.1.1.16.12.2	Reactor Operator Information	7.3-78
7.3.1.1.16.12.3	Set Points	7.3-78
7.3.1.1.17	CGCS Equipment Cubicle Cooling System	7.3-79
7.3.1.1.17.1	System Identification	7.3-79

TABLE OF CONTENTS (Cont'd)

		PAGE
7.3.1.1.17.2	Power Supply	7.3-79
7.3.1.1.17.3	Equipment Design	7.3-79
7.3.1.1.17.4	Initiating Circuits and Logic	7.3-79
7.3.1.1.17.4.1	Indication and Annunciation	7.3-79
7.3.1.1.17.5	Bypass and Interlocks	7.3-79
7.3.1.1.17.6	Redundancy and Diversity	7.3-80
7.3.1.1.17.7	Activated Devices	7.3-80
7.3.1.1.17.8	Testability	7.3-80
7.3.1.1.17.8.1	Sensor Checks	7.3-80
7.3.1.1.17.8.2	Module Checks	7.3-80
7.3.1.1.17.8.3	Channel Checks	7.3-80
7.3.1.1.17.8.4	System Checks	7.3-80
7.3.1.1.17.9	Environmental Conditions	7.3-81
7.3.1.1.17.10	Operational Considerations	7.3-81
7.3.1.1.18	Reactor Core Isolation Cooling	7.3-81
7.3.1.1.19	Feedwater Leakage Control Mode (FWLC) –Instrumentation and Controls	7.3-81
7.3.1.1.19.1	System Identification	7.3-81
7.3.1.1.19.2	Power Sources	7.3-81
7.3.1.1.19.3	Equipment Design	7.3-81
7.3.1.1.19.4	Initiating Circuits	7.3-81
7.3.1.1.19.5	Logic and Sequencing	7.3-81
7.3.1.1.19.6	Bypasses and Interlocks	7.3-82
7.3.1.1.19.7	Redundancy and Diversity	7.3-82
7.3.1.1.19.8	Actuated Devices	7.3-82
7.3.1.1.19.9	Separation	7.3-82
7.3.1.1.19.10	Testability	7.3-82
7.3.1.1.19.11	Environmental Considerations	7.3-82
7.3.1.1.19.12	Operational Considerations	7.3-82
7.3.1.1.19.12.1	General Information	7.3-82
7.3.1.1.19.12.2	Reactor Operator Information	7.3-82
7.3.1.1.19.12.3	Set Points	7.3-82
7.3.1.2	Design Basis Information	7.3-83
7.3.1.2.1	Conditions	7.3-83
7.3.1.2.2	Variables	7.3-83
7.3.1.2.3	Numbers of Sensors and Location	7.3-83
7.3.1.2.4	Operational Limits	7.3-83
7.3.1.2.5	Margin Between Operational Limits	7.3-83
7.3.1.2.6	Levels Requiring Protective Action	7.3-83
7.3.1.2.7	Range of Energy Supply and Environmental Conditions of Safety Systems	7.3-83
7.3.1.2.8	Malfunctions, Accidents, and Other Unusual Events Which Could Cause Damage to Safety System	7.3-84
7.3.1.2.9	Minimum Performance Requirements	7.3-85
7.3.1.3	Final System Drawings	7.3-85
7.3.2	Analysis	7.3-85

TABLE OF CONTENTS (Cont'd)

		PAGE
7.3.2.1	Emergency Core Cooling Systems (ECCS) – Instrumentation and Controls	7.3-85
7.3.2.1.1	General Functional Requirement Conformance	7.3-85
7.3.2.1.2	Specific Regulatory Requirements Conformance	7.3-87
7.3.2.1.2.1	Regulatory Guides	7.3-87
7.3.2.1.2.1.1	Regulatory Guide 1.6	7.3-87
7.3.2.1.2.1.2	Regulatory Guide 1.11	7.3-87
7.3.2.1.2.1.3	Regulatory Guide 1.22	7.3-87
7.3.2.1.2.1.4	Regulatory Guide 1.29	7.3-87
7.3.2.1.2.1.5	Regulatory Guide 1.30	7.3-88
7.3.2.1.2.1.6	Regulatory Guide 1.32	7.3-88
7.3.2.1.2.1.7	Regulatory Guide 1.47	7.3-88
7.3.2.1.2.1.8	Regulatory Guide 1.53	7.3-88
7.3.2.1.2.1.9	Regulatory Guide 1.62	7.3-89
7.3.2.1.2.1.10	Regulatory Guide 1.63	7.3-89
7.3.2.1.2.1.11	Regulatory Guide 1.75	7.3-89
7.3.2.1.2.1.12	Regulatory Guide 1.89	7.3-90
7.3.2.1.2.1.13	Regulatory Guide 1.97	7.3-90
7.3.2.1.2.1.14	Regulatory Guide 1.100	7.3-90
7.3.2.1.2.1.15	Regulatory Guide 1.105	7.3-90
7.3.2.1.2.1.16	Regulatory Guide 1.118	7.3-90
7.3.2.1.2.2	10CFR 50 Appendix A	7.3-91
7.3.2.1.2.3	Industry Standards	7.3-91
7.3.2.1.2.3.1	IEEE 279 Criteria for Protection Systems for Nuclear Power Generating Stations	7.3-91
7.3.2.1.2.3.1.1	General Functional Requirement (IEEE 279, Paragraph 4.1)	7.3-91
7.3.2.1.2.3.1.2	Single Failure Criterion (IEEE 279, Paragraph 4.2)	7.3-94
7.3.2.1.2.3.1.3	Quality of Components (IEEE 279, Paragraph 4.3)	7.3-95
7.3.2.1.2.3.1.4	Equipment Qualification (IEEE 279, Paragraph 4.4)	7.3-96
7.3.2.1.2.3.1.5	Channel Integrity (IEEE 279, Paragraph 4.5)	7.3-98
7.3.2.1.2.3.1.6	Channel Independence (IEEE 279, Paragraph 4.6)	7.3-98
7.3.2.1.2.3.1.7	Control and Protection Interaction (IEEE 279, Paragraph 4.7)	7.3-99
7.3.2.1.2.3.1.8	Derivation of System Inputs (IEEE 279, Paragraph 4.8)	7.3-99
7.3.2.1.2.3.1.9	Capability of Sensor Checks (IEEE 279, Paragraph 4.9)	7.3-100
7.3.2.1.2.3.1.10	Capability for Test and Calibration (IEEE 279, Paragraph 4.10)	7.3-100
7.3.2.1.2.3.1.11	Channel Bypass or Removal from Operation (IEEE 279, Paragraph 4.11)	7.3-101
7.3.2.1.2.3.1.12	Operating Bypasses (IEEE 279, Paragraph 4.12)	7.3-101
7.3.2.1.2.3.1.13	Indication of Bypasses (IEEE 279, Paragraph 4.13)	7.3-101
7.3.2.1.2.3.1.14	Access to Means for Bypassing (IEEE 279, Paragraph 4.14)	7.3-102
7.3.2.1.2.3.1.15	Multiple Trip Settings (IEEE 279, Paragraph 4.15)	7.3-102
7.3.2.1.2.3.1.16	Completion of Protective Action Once Initiated (IEEE 279, Paragraph 4.16)	7.3-102
7.3.2.1.2.3.1.17	Manual Initiation (IEEE 279, Paragraph 4.17)	7.3-103
7.3.2.1.2.3.1.18	Access to Set Point Adjustments (IEEE 279, Paragraph 4.18)	7.3-104
7.3.2.1.2.3.1.19	Identifiction of Protective Actions (IEEE 279, Paragraph 4.19)	7.3-104
7.3.2.1.2.3.1.20	Information Readout (IEEE 279, Paragraph 4.20)	7.3-104

TABLE OF CONTENTS (Cont'd)

		PAGE
7.3.2.1.2.3.1.21	System Repair (IEEE 279, Paragraph 4.21)	7.3-105
7.3.2.1.2.3.1.22	Identification (IEEE 279, Paragraph 4.22)	7.3-106
7.3.2.1.2.3.2	IEEE 308	7.3-106
7.3.2.1.2.3.3	IEEE 323	7.3-106
7.3.2.1.2.3.4	IEEE 336	7.3-106
7.3.2.1.2.3.5	IEEE 338	7.3-106
7.3.2.1.2.3.6	IEEE 344	7.3-106
7.3.2.1.2.3.7	IEEE 379	7.6-106
7.3.2.1.2.3.8	IEEE 384	7.6-106
7.3.2.2	Containment and Reactor Vessel Isolation Control System (CRVICS) - Instrumentation and Controls	7.3-107
7.3.2.2.1	General Functional Requirements Conformance	7.3-107
7.3.2.2.2	Specific Regulatory Requirements Conformance	7.3-107
7.3.2.2.2.1	NRC Regulatory Guides	7.3-107
7.3.2.2.2.1.1	Regulatory Guide 1.11	7.3-107
7.3.2.2.2.1.2	Regulatory Guide 1.22	7.3-107
7.3.2.2.2.1.3	Regulatory Guide 1.29	7.3-107
7.3.2.2.2.1.4	Regulatory Guide 1.30	7.3-107
7.3.2.2.2.1.5	Regulatory Guide 1.47	7.3-108
7.3.2.2.2.1.6	Regulatory Guide 1.53	7.3-108
7.3.2.2.2.1.7	Regulatory Guide 1.62	7.3-109
7.3.2.2.2.1.8	Regulatory Guide 1.63	7.3-109
7.3.2.2.2.1.9	Regulatory Guide 1.73	7.3-109
7.3.2.2.2.1.10	Regulatory Guide 1.75	7.3-109
7.3.2.2.2.1.11	Regulatory Guide 1.89	7.3-109
7.3.2.2.2.1.12	Regulatory Guide 1.97	7.3-109
7.3.2.2.2.1.13	Regulatory Guide 1.100	7.3-109
7.3.2.2.2.1.14	Regulatory Guide 1.105	7.3-110
7.3.2.2.2.1.15	Regulatory Guide 1.118	7.3-110
7.3.2.2.2.2	Conformance to 10 CFR 50 Appendix A	7.3-110
7.3.2.2.2.3	Industry Codes and Standards	7.3-112
7.3.2.2.2.3.1	IEEE 279	7.3-112
7.3.2.2.2.3.1.1	General Functional Requirement (IEEE 279, Paragraph 4.1)	7.3-112
7.3.2.2.2.3.1.2	Single Failure Criterion (IEEE 279, Paragraph 4.2)	7.3-114
7.3.2.2.2.3.1.3	Quality of Components and Modules (IEEE 279, Paragraph 4.3)	7.3-115
7.3.2.2.2.3.1.4	Equipment Qualification (IEEE 279, Paragraph 4.4)	7.3-115
7.3.2.2.2.3.1.5	Channel Integrity (IEEE 279, Paragraph 4.5)	7.3-115
7.3.2.2.2.3.1.6	Channel Independence (IEEE 279, Paragraph 4.6)	7.3-115
7.3.2.2.2.3.1.7	Control and Protection Interaction (IEEE 279, Paragraph 4.7)	7.3-116
7.3.2.2.2.3.1.8	Derivation of System Inputs (IEEE 279, Paragraph 4.8)	7.3-116
7.3.2.2.2.3.1.9	Capability for Sensor Checks (IEEE 279, Paragraph 4.9)	7.3-116
7.3.2.2.2.3.1.10	Capability for Test and Calibration (IEEE 279, Paragraph 4.10)	7.3-116
7.3.2.2.2.3.1.11	Channel Bypass or Removal from Operation (IEEE 279, Paragraph 4.11)	7.3-117
7.3.2.2.2.3.1.12	Operating Bypasses (IEEE 279, Paragraph 4.12)	7.3-117
7.3.2.2.2.3.1.13	Indication of Bypasses (IEEE 279, Paragraph 4.13)	7.3-117

TABLE OF CONTENTS (Cont'd)

		PAGE
7.3.2.2.2.3.1.14	Access to Means for Bypassing (IEEE 279, Paragraph 4.14)	7.3-117
7.3.2.2.2.3.1.15	Multiple Setpoints (IEEE 279, Paragraph 4.15)	7.3-117
7.3.2.2.2.3.1.16	Completion of Protection Action Once Initiated (IEEE 279, Paragraph 4.16)	7.3-118
7.3.2.2.2.3.1.17	Manual Action (IEEE 279, Paragraph 4.17)	7.3-118
7.3.2.2.2.3.1.18	Access to Setpoint Adjustments (IEEE 279, Paragraph 4.18)	7.3-118
7.3.2.2.2.3.1.19	Identification of Protective Actions (IEEE 279, Paragraph 4.19)	7.3-118
7.3.2.2.2.3.1.20	Information Readout (IEEE 279, Paragraph 4.20)	7.3-118
7.3.2.2.2.3.1.21	System Repair (IEEE 279, Paragraph 4.21)	7.3-119
7.3.2.2.2.3.1.22	Identification of Protection Systems (IEEE 279, Paragraph 4.22)	7.3-119
7.3.2.2.2.3.2	Conformance to IEEE 308	7.3-119
7.3.2.2.2.3.3	Conformance to IEEE 317	7.3-119
7.3.2.2.2.3.4	Conformance to IEEE 323	7.3-120
7.3.2.2.2.3.5	Conformance to IEEE 336	7.3-120
7.3.2.2.2.3.6	Conformance to IEEE 338	7.3-120
7.3.2.2.2.3.7	Conformance to IEEE 344	7.3-120
7.3.2.2.2.3.8	Conformance to IEEE 379	7.3-120
7.3.2.2.2.3.9	Conformance to IEEE 384	7.3-120
7.3.2.3	Main Steam Line Isolation Valve-Leakage Control System-(MSIV-LCS) - Instrumentation and Controls	7.3-120

TABLE OF CONTENTS (Cont'd)

		PAGE
7.3.2.4	Containment Spray Cooling Mode (RHR) Instrumentation and Controls	7.3-126
7.3.2.4.1	General Functional Requirement Conformance	7.3-126
7.3.2.4.2	Specific Regulatory Requirements Conformance	7.3-126
7.3.2.4.2.1	Regulatory Guides Conformance	7.3-126
7.3.2.4.2.1.1	Regulatory Guide 1.6	7.3-126
7.3.2.4.2.1.2	Regulatory Guide 1.11	7.3-126
7.3.2.4.2.1.3	Regulatory Guide 1.22	7.3-126
7.3.2.4.2.1.4	Regulatory Guide 1.29	7.3-126
7.3.2.4.2.1.5	Regulatory Guide 1.30	7.3-126
7.3.2.4.2.1.6	Regulatory Guide 1.32	7.3-127
7.3.2.4.2.1.7	Regulatory Guide 1.47	7.3-127
7.3.2.4.2.1.8	Regulatory Guide 1.53	7.3-127
7.3.2.4.2.1.9	Regulatory Guide 1.62	7.3-127
7.3.2.4.2.1.10	Regulatory Guide 1.63	7.3-127
7.3.2.4.2.1.11	Regulatory Guide 1.73	7.3-127
7.3.2.4.2.1.12	Regulatory Guide 1.75	7.3-127
7.3.2.4.2.1.13	Regulatory Guide 1.89	7.3-127
7.3.2.4.2.2	Conformance to 10 CFR 50, Appendix A General Design Criteria	7.3-128
7.3.2.4.3	Conformance to Industry Codes and Standards	7.3-129

TABLE OF CONTENTS (Cont'd)

		PAGE
7.3.2.4.3.1	IEEE 279	7.3-129
7.3.2.4.3.1.1	General Functional Requirement (IEEE 279, Paragraph 4.1)	7.3-129
7.3.2.4.3.1.2	Single-Failure Criterion (IEEE 279, Paragraph 4.2)	7.3-131
7.3.2.4.3.1.3	Quality Components (IEEE 279, Paragraph 4.3)	7.3-131
7.3.2.4.3.1.4	Equipment Qualification (IEEE 279, Paragraph 4.4)	7.3-132
7.3.2.4.3.1.5	Channel Integrity (IEEE 279, Paragraph 4.5)	7.3-132
7.3.2.4.3.1.6	Channel Independence (IEEE 279, Paragraph 4.6)	7.3-132
7.3.2.4.3.1.7	Control and Protection Interaction (IEEE 279, Paragraph 4.7)	7.3-132
7.3.2.4.3.1.8	Derivation of System Inputs (IEEE 279, Paragraph 4.8)	7.3-132
7.3.2.4.3.1.9	Capability for Sensor Checks (IEEE 279, Paragraph 4.9)	7.3-132
7.3.2.4.3.1.10	Capability for Test and Calibration (IEEE 279, Paragraph 4.10)	7.3-133
7.3.2.4.3.1.11	Channel Bypass or Removal from Operation (IEEE 279, Paragraph 4.11)	7.3-133
7.3.2.4.3.1.12	Operating Bypasses (IEEE 279, Paragraph 4.12)	7.3-133
7.3.2.4.3.1.13	Indication of Bypasses (IEEE 279, Paragraph 4.13)	7.3-133
7.3.2.4.3.1.14	Access to Means for Bypassing (IEEE 279, Paragraph 4.14)	7.3-133
7.3.2.4.3.1.15	Multiple Trip Settings (IEEE 279, Paragraph 4.15)	7.3-133
7.3.2.4.3.1.16	Completion of Protection Action Once it is Initiated (IEEE 279, Paragraph 4.16)	7.3-133
7.3.2.4.3.1.17	Manual Actuation (IEEE 279, Paragraph 4.17)	7.3-134
7.3.2.4.3.1.18	Access to Set Point Adjustment (IEEE 279, Paragraph 4.18)	7.3-134
7.3.2.4.3.1.19	Identification of Protective Actions (IEEE 279, Paragraph 4.19)	7.3-134
7.3.2.4.3.1.20	Information Readout (IEEE 279, Paragraph 4.20)	7.3-134
7.3.2.4.3.1.21	System Repair (IEEE 279, Paragraph 4.21)	7.3-134
7.3.2.4.3.1.22	Identification (IEEE 279, Paragraph 4.22)	7.3-135
7.3.2.4.3.2	IEEE 308	7.3-135
7.3.2.4.3.3	IEEE 317	7.3-135
7.3.2.4.3.4	IEEE 323	7.3-135
7.3.2.4.3.5	IEEE 336	7.3-135
7.3.2.4.3.6	IEEE 338	7.3-135
7.3.2.4.3.7	IEEE 344	7.3-135
7.3.2.4.3.8	IEEE 379	7.3-135
7.3.2.4.3.9	IEEE 384	7.3-136
7.3.2.4.3.10	IEEE 387	7.3-136
7.3.2.5	Shutdown Service Water System Instrumentation and Controls	7.3-136
7.3.2.5.1	Conformation to General Functional Requirements	7.3-136
7.3.2.5.2	Conformance to Specific Regulatory Requirements	7.3-136
7.3.2.5.2.1	Conformance to 10 CFR 50, Appendix A	7.3-136
7.3.2.5.2.2	Conformance to Industry Standards	7.3-136
7.3.2.5.2.2.1	IEEE 279, Criteria for Protection Systems for Nuclear Power Generating Stations	7.3-136
7.3.2.5.2.2.1.1	General Functional Requirement (IEEE 279, Paragraph 4.1)	7.3-136
7.3.2.5.2.2.1.2	Single-Failure Criterion (IEEE 279, Paragraph 4.2)	7.3-136
7.3.2.5.2.2.1.3	Quality of Components and Modules (IEEE 279, Paragraph 4.3)	7.3-137
7.3.2.5.2.2.1.4	Equipment Qualification (IEEE 279, Paragraph 4.4)	7.3-137
7.3.2.5.2.2.1.5	Channel Integrity (IEEE 279, Paragraph 4.5)	7.3-137
7.3.2.5.2.2.1.6	Channel Independence (IEEE 279, Paragraph 4.6)	7.3-137

TABLE OF CONTENTS (Cont'd)

		PAGE
7.3.2.5.2.2.1.7	Control and Protection Systems Interaction (IEEE 279, Paragraph 4.7)	7.3-137
7.3.2.5.2.2.1.8	Derivation of System Inputs (IEEE 279, Paragraph 4.8)	7.3-137
7.3.2.5.2.2.1.9	Capability for Sensor Checks (IEEE 279, Paragraph 4.9)	7.3-137
7.3.2.5.2.2.1.10	Capability for Test and Calibration (IEEE 279, Paragraph 4.10)	7.3-137
7.3.2.5.2.2.1.11	Channel Bypass or Removal from Operation (IEEE 279, Paragraph 4.11)	7.3-137
7.3.2.5.2.2.1.12	Operating Bypasses (IEEE 279, Paragraph 4.12)	7.3-138
7.3.2.5.2.2.1.13	Indication of Bypasses (IEEE 279, Paragraph 4.13)	7.3-138
7.3.2.5.2.2.1.14	Access to Means for Bypassing (IEEE 279, Paragraph 4.14)	7.3-138
7.3.2.5.2.2.1.15	Multiple Set Points (IEEE 279, Paragraph 4.15)	7.3-138
7.3.2.5.2.2.1.16	Completion of Protection Action Once Initiated (IEEE 279, Paragraph 4.16)	7.3-138
7.3.2.5.2.2.1.17	Manual Actuation (IEEE 279, Paragraph 4.17)	7.3-138
7.3.2.5.2.2.1.18	Access to Set Point Adjustments, Calibration, and Test Points (IEEE 279, Paragraph 4.18)	7.3-138
7.3.2.5.2.2.1.19	Identification of Protective Actions (IEEE 279, Paragraph 4.19)	7.3-138
7.3.2.5.2.2.1.20	Information Readout (IEEE 279, Paragraph 4.20)	7.3-138
7.3.2.5.2.2.1.21	System Repair (IEEE 279, Paragraph 4.21)	7.3-138
7.3.2.5.2.2.1.22	Identification of Protection Systems (IEEE 279, Paragraph 4.22)	7.3-139
7.3.2.5.2.2.2	Compliance to IEEE 323	7.3-139
7.3.2.5.2.2.3	Compliance to IEEE 338	7.3-139
7.3.2.5.2.2.4	Compliance to IEEE 344	7.3-139
7.3.2.5.2.2.5	Compliance to IEEE 379	7.3-139
7.3.2.6	Main Control Room HVAC System – Instrumentation and Controls	7.3-139
7.3.2.6.1	Specific Conformance of the Instrumentation and Control to IEEE 279	7.3-139
7.3.2.6.1.1	General Functional Requirements (IEEE 279, Paragraph 4.1)	7.3-139
7.3.2.6.1.2	Single Failure Criterion (IEEE 279, Paragraph 4.2)	7.3-139
7.3.2.6.1.3	Quality of Components and Modules (IEEE 279, Paragraph 4.3)	7.3-139
7.3.2.6.1.4	Equipment Qualification (IEEE 279, Paragraph 4.4)	7.3-140
7.3.2.6.1.5	Channel Integrity (IEEE 279, Paragraph 4.5)	7.3-140
7.3.2.6.1.6	Channel Independence (IEEE 279, Paragraph 4.6)	7.3-140
7.3.2.6.1.7	Control and Protection System Interaction (IEEE 279, Paragraph 4.7)	7.3-140
7.3.2.6.1.7.1	Classification of Equipment (IEEE 279, Paragraph 4.7.1)	7.3-140
7.3.2.6.1.7.2	Isolation Devices, Single Random Failure and Multiple Failures Resulting from a Credible Single Event (Paragraphs 4.7.2, 4.7.3, 4.7.4 of IEEE 279)	7.3-140
7.3.2.6.1.8	Derivation of System Input (IEEE 279, Paragraph 4.8)	7.3-140
7.3.2.6.1.9	Capability for Sensor Checks (IEEE 279, Paragraph 4.9)	7.3-140
7.3.2.6.1.10	Capability for Test and Calibration (IEEE 279, Paragraph 4.10)	7.3-140
7.3.2.6.1.11	Channel Bypass or Removal from Operation (IEEE 279, Paragraph 4.11)	7.3-141
7.3.2.6.1.12	Operating Bypass (IEEE 279, Paragraph 4.12)	7.3-141
7.3.2.6.1.13	Indication of Bypasses (IEEE 279, Paragraph 4.13)	7.3-141

TABLE OF CONTENTS (Cont'd)

		PAGE
7.3.2.6.1.14	Access to Means for Bypassing (IEEE 279, Paragraph 4.14)	7.3-141
7.3.2.6.1.15	Multiple Set Points (IEEE 279, Paragraph 4.15)	7.3-141
7.3.2.6.1.16	Completion of Protective Action Once It Is Initiated (IEEE 279, Paragraph 4.16)	7.3-141
7.3.2.6.1.17	Manual Initiation (IEEE 279, Paragraph 4.17)	7.3-141
7.3.2.6.1.18	Access to Set Point Adjustments, Calibrations, and Test Points (IEEE 279, Paragraph 4.18)	7.3-141
7.3.2.6.1.19	Identification of Protective Actions (IEEE 279, Paragraph 4.19)	7.3-141
7.3.2.6.1.20	Information Read Out (IEEE 279, Paragraph 4.20)	7.3-141
7.3.2.6.1.21	System Repair (IEEE 279, Paragraph 4.21)	7.3-142
7.3.2.6.1.22	Identification (IEEE 279, Paragraph 4.22)	7.3-142
7.3.2.6.2	Specific Conformance of the Instrumentation and Controls to General Design Criteria, 10 CFR 50 Appendix A	7.3-142
7.3.2.6.2.1	Criterion 13 - Instrumentation and Controls	7.3-142
7.3.2.6.2.2	Criterion 19 - Control Room	7.3-142
7.3.2.6.3	Conformance to Regulatory Guide 1.47	7.3-142
7.3.2.7	Combustible Gas Control System	7.3-142
7.3.2.7.1	Conformance to General Functional Requirements	7.3-142
7.3.2.7.2	Conformance with Specific Regulatory Requirements	7.3-142
7.3.2.7.2.1	Conformance with 10 CFR 50 General Design Criteria	7.3-142
7.3.2.7.2.2	Conformance to IEEE Standard 279	7.3-143
7.3.2.7.2.2.1	General Functional Requirements (IEEE 279, Paragraph 4.1)	7.3-143
7.3.2.7.2.2.2	Single Failure Criterion (IEEE 279, Paragraph 4.2)	7.3-143
7.3.2.7.2.2.3	Quality of Components and Modules (IEEE 279, Paragraph 4.3)	7.3-144
7.3.2.7.2.2.4	Equipment Qualification (IEEE 279, Paragraph 4.4)	7.3-144
7.3.2.7.2.2.5	Channel Integrity (IEEE 279, Paragraph 4.5)	7.3-144
7.3.2.7.2.2.6	Channel Independence (IEEE 279, Paragraph 4.6)	7.3-144
7.3.2.7.2.2.7	Control and Protection System Interaction (IEEE 279, Paragraph 4.7)	7.3-144
7.3.2.7.2.2.8	Derivation of System Inputs (IEEE 279, Paragraph 4.8)	7.3-144
7.3.2.7.2.2.9	Capability for Sensor Checks (IEEE 279, Paragraph 4.9)	7.3-144
7.3.2.7.2.2.10	Capability for Test and Calibration (IEEE 279, Paragraph 4.10)	7.3-144
7.3.2.7.2.2.11	Channel Bypass or Removal from Operation (IEEE 279, Paragraph 4.11)	7.3-145
7.3.2.7.2.2.12	Operating Bypasses (IEEE 279, Paragraph 4.12)	7.3-145
7.3.2.7.2.2.13	Indication of Bypasses (IEEE 279, Paragraph 4.13)	7.3-145
7.3.2.7.2.2.14	Access to Means for Bypassing (IEEE 279, Paragraph 4.14)	7.3-145
7.3.2.7.2.2.15	Multiple Set Points (IEEE 279, Paragraph 4.15)	7.3-145
7.3.2.7.2.2.16	Completion of Protective Action Once It Is Initiated (IEEE 279, Paragraph 4.16)	7.3-145
7.3.2.7.2.2.17	Manual Initiation (IEEE 279, Paragraph 4.17)	7.3-145
7.3.2.7.2.2.18	Access to Set Point Adjustments (IEEE 279, Paragraph 4.18)	7.3-145
7.3.2.7.2.2.19	Identification of Protective Actions (IEEE 279, Paragraph 4.19)	7.3-145
7.3.2.7.2.2.20	Information Readout (IEEE 279, Paragraph 4.20)	7.3-145
7.3.2.7.2.2.21	System Repair (IEEE 279, Paragraph 4.21)	7.3-146
7.3.2.7.2.2.22	Indentification (IEEE 279, Paragraph 4.22)	7.3-146
7.3.2.7.2.3	Conformance to IEEE Standard 338	7.3-146

TABLE OF CONTENTS (Cont'd)

		PAGE
7.3.2.7.2.4	Branch Technical Position EICSB 19	7.3-146
7.3.2.8	Standby Power System - Instrumentation and Controls	7.3-146
7.3.2.8.1	HPCI Instrumentation and Controls	7.3-146
7.3.2.8.2	Emergency Diesel-Generator System	7.3-146
7.3.2.9	Standby Gas Treatment System Instrumentation and Controls	7.3-146
7.3.2.9.1	Specific Conformance of the Instrumentation and Control of IEEE 279	7.3-146
7.3.2.9.1.1	General Functional Requirements (IEEE 279, Paragraph 4.1)	7.3-146
7.3.2.9.1.2	Single Failure Criterion (IEEE 279, Paragraph 4.2)	7.3-146
7.3.2.9.1.3	Quality of Components and Modules (IEEE 279, Paragraph 4.3)	7.3-147
7.3.2.9.1.4	Equipment Qualification (IEEE 279, Paragraph 4.4)	7.3-147
7.3.2.9.1.5	Channel Integrity (IEEE 279, Paragraph 4.5)	7.3-147
7.3.2.9.1.6	Channel Independence (IEEE 279, Paragraph 4.6)	7.3-147
7.3.2.9.1.7	Control and Protection System Interaction (IEEE 279, Paragraph 4.7)	7.3-147
7.3.2.9.1.7.1	Classification of Equipment (IEEE 279, Paragraph 4.7.1)	7.3-147
7.3.2.9.1.7.2	Isolation Devices (IEEE 279, Paragraph 4.7.2)	7.3-147
7.3.2.9.1.7.3	Single Random Failure (IEEE 279, Paragraph 4.7.3)	7.3-147
7.3.2.9.1.7.4	Multiple Failures Resulting From a Credible Single Event (IEEE 279, Paragraph 4.7.4)	7.3-147
7.3.2.9.1.8	Derivation of System Inputs (IEEE 279, Paragraph 4.8)	7.3-148
7.3.2.9.1.9	Capability for Sensor Checks (IEEE 279, Paragraph 4.9)	7.3-148
7.3.2.9.1.10	Capability for Test and Calibration (IEEE 279, Paragraph 4.10)	7.3-148
7.3.2.9.1.11	Channel Bypass or Removal from Operation (IEEE 279, Paragraph 4.11)	7.3-148
7.3.2.9.1.12	Operating Bypasses (IEEE 279, Paragraph 4.12)	7.3-148
7.3.2.9.1.13	Indication of Bypasses (IEEE 279, Paragraph 4.13)	7.3-148
7.3.2.9.1.14	Access to Means for Bypassing (IEEE 279, Paragraph 4.14)	7.3-148
7.3.2.9.1.15	Multiple Setpoints (IEEE 279, Paragraph 4.15)	7.3-148
7.3.2.9.1.16	Completion of Protective Action Once It Is Initiated (IEEE 279, Paragraph 4.16)	7.3-148
7.3.2.9.1.17	Manual Initiation (IEEE 279, Paragraph 4.17)	7.3-148
7.3.2.9.1.18	Access to Setpoint Adjustments, Calibration, and Test Points (IEEE 279, Paragraph 4.18)	7.3-149
7.3.2.9.1.19	Identification of Protective Actions (IEEE 279, Paragraph 4.19)	7.3-149
7.3.2.9.1.20	Information Readout (IEEE 279, Paragraph 4.20)	7.3-149
7.3.2.9.1.21	System Repair (IEEE 279, Paragraph 4.21)	7.3-149
7.3.2.9.1.22	Identification (IEEE 279, Paragraph 4.22)	7.3-149
7.3.2.9.2	Specific Conformance of Instruments and Controls to General Design Criteria 10 CFR 50, Appendix A	7.3-149
7.3.2.10	Suppression Pool Makeup System	7.3-149
7.3.2.10.1	Conformance to General Functional Requirements	7.3-149
7.3.2.10.2	Conformance with Specific Regulatory Requirements	7.3-149
7.3.2.10.2.1	Conformance with 10 CFR 50 General Design Criteria	7.3-149
7.3.2.10.2.2	Conformance to IEEE Standard 279	7.3-150
7.3.2.10.2.3	Conformance to IEEE Standard 338	7.3-153
7.3.2.11	Diesel Oil-Instrumentation and Controls	7.3-153

TABLE OF CONTENTS (Cont'd)

		PAGE
7.3.2.11.1	Conformance to General Functional Requirements	7.3-153
7.3.2.11.2	Conformance to Specific Regulatory Requirements	7.3-153
7.3.2.11.2.1	Conformance to 10 CFR 50 Appendix A	7.3-153
7.3.2.11.2.2	Conformance to Industry Standards	7.3-154
7.3.2.11.2.2.1	IEEE 279, Criteria for Protection Systems for Nuclear Power Generating Stations	7.3-154
7.3.2.11.2.2.1.1	General Functional Requirements (IEEE 279, Paragraph 4.1)	7.3-154
7.3.2.11.2.2.1.2	Single-Failure Criterion (IEEE 279, Paragraph 4.2)	7.3-154
7.3.2.11.2.2.1.3	Quality of Components and Modules (IEEE 279, Paragraph 4.3)	7.3-154
7.3.2.11.2.2.1.4	Equipment Qualification (IEEE 279, Paragraph 4.4)	7.3-154
7.3.2.11.2.2.1.5	Channel Integrity (IEEE 279, Paragraph 4.5)	7.3-154
7.3.2.11.2.2.1.6	Channel Independence (IEEE 279, Paragraph 4.6)	7.3-154
7.3.2.11.2.2.1.7	Control and Protection System Interaction (IEEE 279, Paragraph 4.7)	7.3-155
7.3.2.11.2.2.1.8	Derivation of System Inputs (IEEE 279, Paragraph 4.8)	7.3-155
7.3.2.11.2.2.1.9	Capability of Sensor Checks (IEEE 279, Paragraph 4.9)	7.3-155
7.3.2.11.2.2.1.10	Capability for Test and Calibration (IEEE 279, Paragraph 4.10)	7.3-155
7.3.2.11.2.2.1.11	Channel Bypass. or Removal from Operation (IEEE 279, Paragraph 4.11)	7.3-155
7.3.2.11.2.2.1.12	Operating Bypasses (IEEE 279, Paragraph 4.12)	7.3-155
7.3.2.11.2.2.1.13	Indication of Bypasses (IEEE 279, Paragraph 4.13)	7.3-155
7.3.2.11.2.2.1.14	Access to Means for Bypassing (IEEE 279, Paragraph 4.14)	7.3-155
7.3.2.11.2.2.1.15	Multiple Set Points (IEEE 279, Paragraph 4.15)	7.3-155
7.3.2.11.2.2.1.16	Completion of Protection Action Once Initiated (IEEE 279, Paragraph 4.16)	7.3-155
7.3.2.11.2.2.1.17	Manual Actuation (IEEE 279, Paragraph 4.17)	7.3-156
7.3.2.11.2.2.1.18	Access to Set Point Adjustments, Calibration and Test Point (IEEE 279, Paragraph 4.18)	7.3-156
7.3.2.11.2.2.1.19	Identification of Protective Actions (IEEE 279, Paragraph 4.19)	7.3-156
7.3.2.11.2.2.1.20	Information Read-Out (IEEE 279, Paragraph 4.20)	7.3-156
7.3.2.11.2.2.1.21	System Repair (IEEE 279, Paragraph 4.21)	7.3-156
7.3.2.11.2.2.1.22	Identification of Protection System (IEEE 279, Paragraph 4.22)	7.3-156
7.3.2.11.2.2.2	Compliance to IEEE 338	7.3-156
7.3.2.11.2.2.3	Compliance to IEEE 379	7.3-156
7.3.2.12	Diesel-Generator Room HVAC System – Instrumentation and Controls	7.3-156
7.3.2.12.1	Specific Conformance of the Instrumentation and Controls to IEEE 279	7.3-156
7.3.2.12.1.1	General Functional Requirements (IEEE 279, Paragraph 4.1)	7.3-156
7.3.2.12.1.2	Single Failure Criterion (IEEE 279, Paragraph 4.2)	7.3-157
7.3.2.12.1.3	Quality of Components and Modules (IEEE 279, Paragraph 4.3)	7.3-157
7.3.2.12.1.4	Equipment Qualification (IEEE 279, Paragraph 4.4)	7.3-157
7.3.2.12.1.5	Channel Integrity (IEEE 279, Paragraph 4.5)	7.3-157
7.3.2.12.1.6	Channel Independence (IEEE 279, Paragraph 4.6)	7.3-157
7.3.2.12.1.7	Control and Protection System Interaction (IEEE 279, Paragraph 4.7)	7.3-157

TABLE OF CONTENTS (Cont'd)

		PAGE
7.3.2.12.1.7.1	Classification of Equipment (IEEE 279, Paragraph 4.7.1)	7.3-157
7.3.2.12.1.7.2	Isolation Devices, Single Random Failure and Multiple Failures Resulting from a Credible Single Event (Paragraphs 4.7.2, 4.7.3, 4.7.4)	7.3-157
7.3.2.12.1.8	Derivation of System Input (IEEE 279, Paragraph 4.8)	7.3-158
7.3.2.12.1.9	Capability for Sensor Checks (IEEE 279, Paragraph 4.9)	7.3-158
7.3.2.12.1.10	Capability for Test and Calibration (IEEE 279, Paragraph 4.10)	7.3-158
7.3.2.12.1.11	Channel Bypass or Removal from Operation (IEEE 279, Paragraph 4.11)	7.3-158
7.3.2.12.1.12	Operating Bypass (IEEE 279, Paragraph 4.12)	7.3-158
7.3.2.12.1.13	Indication of Bypasses (IEEE 279, Paragraph 4.13)	7.3-158
7.3.2.12.1.14	Access to Means for Bypassing (IEEE 279, Paragraph 4.14)	7.3-158
7.3.2.12.1.15	Multiple Set Points (IEEE 279, Paragraph 4.15)	7.3-158
7.3.2.12.1.16	Completion of Protective Action Once It Is Initiated (IEEE 279, Paragraph 4.16)	7.3-158
7.3.2.12.1.17	Manual Initiation (IEEE 279, Paragraph 4.17)	7.3-158
7.3.2.12.1.18	Access to Set Point Adjustments,Calibrations and Test Points (IEEE 279, Paragraph 4.18)	7.3-159
7.3.2.12.1.19	Identification of Protective Action (IEEE 279, Paragraph 4.19)	7.3-159
7.3.2.12.1.20	Information Read Out (IEEE 279, (Paragraph 4.20)	7.3-159
7.3.2.12.1.21	System Repair (IEEE 279, Paragraph 4.21)	7.3-159
7.3.2.12.1.22	Identification (IEEE 279, Paragraph 4.22)	7.3-159
7.3.2.12.2	Specific Conformation of the Instrumentation and Controls to General Design Criteria, 10 CFR 50 Appendix A	7.3-159
7.3.2.12.2.1	Criterion 13 - Instrumentation and Controls	7.3-159
7.3.2.13	Shutdown Service Water Pump Room Ventilation System Instrumentation and Controls	7.3-159
7.3.2.13.1	Specific Conformance of the Instrumentation and Controls to IEEE 279	7.3-159
7.3.2.13.1.1	General Functional Requirements (IEEE 279, Paragraph 4.1)	7.3-159
7.3.2.13.1.2	Single Failure Criterion (IEEE 279, Paragraph 4.2)	7.3-159
7.3.2.13.1.3	Quality of Components and Modules (IEEE 279, Paragraph 4.3)	7.3-160
7.3.2.13.1.4	Equipment Qualification (IEEE 279, Paragraph 4.4)	7.3-160
7.3.2.13.1.5	Channel Integrity (IEEE 279, Paragraph 4.5)	7.3-160
7.3.2.13.1.6	Channel Independence (IEEE 279, Paragraph 4.6)	7.3-160
7.3.2.13.1.7	Control and Protection System Interaction (IEEE 279, Paragraph 4.7)	7.3-160
7.3.2.13.1.7.1	Classification of Equipment (IEEE 279, Paragraph 4.7.1)	7.3-160
7.3.2.13.1.7.2	Isolation Devices, Single Random Failure and Multiple Failures Resulting from a Credible Single Event (Paragraphs 4.7.2, 4.7.3, 4.7.4 of IEEE 279)	7.3-160
7.3.2.13.1.8	Derivation of System Input (IEEE 279, Paragraph 4.8)	7.3-160
7.3.2.13.1.9	Capability for Sensor Checks (IEEE 279, Paragraph 4.9)	7.3-160
7.3.2.13.1.10	Capability for Test and Calibration (IEEE 279, Paragraph 4.10)	7.3-161
7.3.2.13.1.11	Channel Bypass or Removal from Operation (IEEE 279, Paragraph 4.11)	7.3-161
7.3.2.13.1.12	Operating Bypass (IEEE 279, Paragraph 4.12)	7.3-161

TABLE OF CONTENTS (Cont'd)

		PAGE
7.3.2.13.1.13	Indication of Bypasses (IEEE 279, Paragraph 4.13)	7.3-161
7.3.2.13.1.14	Access to Means for Bypassing (IEEE 279, Paragraph 4.14)	7.3-161
7.3.2.13.1.15	Multiple Set Points (IEEE 279, Paragraph 4.15)	7.3-161
7.3.2.13.1.16	Completion of Protective Action Once It Is Initiated (IEEE 279, Paragraph 4.16)	7.3-161
7.3.2.13.1.17	Manual Initiation (IEEE 279, Paragraph 4.17)	7.3-161
7.3.2.13.1.18	Access to Set Point Adjustments, Calibrations and Test Points (IEEE 279, Paragraph 4.18)	7.3-161
7.3.2.13.1.19	Identification of Protective Action (IEEE 279, Paragraph 4.19)	7.3-161
7.3.2.13.1.20	Information Readout (IEEE 279, Paragraph 4.20)	7.3-162
7.3.2.13.1.21	System Repair (IEEE 279, Paragraph 4.21)	7.3-162
7.3.2.13.1.22	Indentification (IEEE 279, Paragraph 4.22)	7.3-162
7.3.2.13.2	Specific Conformance of the Instrumentation and Controls to General Design Criteria, 10 CFR 50 Appendix A	7.3-162
7.3.2.13.2.1	Criterion 13 - Instrumentation and Controls	7.3-162
7.3.2.14	Essential Switchgear Heat Removal HVAC System - Instrumentation and Controls	7.3-162
7.3.2.14.1	Specific Conformance of the Instrumentation and Controls to IEEE 279	7.3-162
7.3.2.14.1.1	General Functional Requirements (IEEE 279, Paragraph 4.1)	7.3-162
7.3.2.14.1.2	Single Failure Criterion (IEEE 279, Paragraph 4.2)	7.3-162
7.3.2.14.1.3	Quality of Components and Modules (IEEE 279, Paragraph 4.3)	7.3-163
7.3.2.14.1.4	Equipment Qualification (IEEE 279, Paragraph 4.4)	7.3-163
7.3.2.14.1.5	Channel Integrity (IEEE 279, Paragraph 4.5)	7.3-163
7.3.2.14.1.6	Channel Independence (IEEE 279, Paragraph 4.6)	7.3-163
7.3.2.14.1.7	Control and Protection System Interaction (IEEE 279, Paragraph 4.7)	7.3-163
7.3.2.14.1.7.1	Classification of Equipment (IEEE 279, Paragraph 4.7.1)	7.3-163
7.3.2.14.1.7.2	Isolation Devices, Single Random Failure and Multiple Failures Resulting from a Credible Single Event (Paragraphs 4.7.2, 4.7.3, 4.7.4 of IEEE 279)	7.3-163
7.3.2.14.1.8	Derivation of System Inputs (IEEE 279, Paragraph 4.8)	7.3-163
7.3.2.14.1.9	Capability for Sensor Checks (IEEE 279, Paragraph 4.9)	7.3-163
7.3.2.14.1.10	Capability for Test and Calibration (IEEE 279, Paragraph 4.10)	7.3-164
7.3.2.14.1.11	Channel Bypass or Removal from Operation (IEEE 279, Paragraph 4.11)	7.3-164
7.3.2.14.1.12	Operating Bypass (IEEE 279, Paragraph 4.12)	7.3-164
7.3.2.14.1.13	Indication of Bypasses (IEEE 279, Paragraph 4.13)	7.3-164
7.3.2.14.1.14	Access to Means for Bypassing (IEEE 279, Paragraph 4.14)	7.3-164
7.3.2.14.1.15	Multiple Set Points (IEEE 279, Paragraph 4.15)	7.3-164
7.3.2.14.1.16	Completion of Protective Action Once It Is Initiated (IEEE 279, Paragraph 4.16)	7.3-164
7.3.2.14.1.17	Manual Initiation (IEEE 279, Paragraph 4.17)	7.3-164
7.3.2.14.1.18	Access to Set Point Adjustments, Calibrations, and Test Points (IEEE 279, Paragraph 4.18)	7.3-164
7.3.2.14.1.19	Identification of Protective Actions (IEEE 279, Paragraph 4.19)	7.3-164
7.3.2.14.1.20	Information Read Out (IEEE 279, Paragraph 4.20)	7.3-165

TABLE OF CONTENTS (Cont'd)

		PAGE
7.3.2.14.1.21	System Repair (IEEE 279, Paragraph 4.21)	7.3-165
7.3.2.14.1.22	Indentification (IEEE 279, Paragraph 4.22)	7.3-165
7.3.2.14.2	Specific Conformance of the Instrumentation and Controls to General Design Criteria, 10 CFR 50, Appendix A	7.3-165
7.3.2.14.2.1	Criterion 13 - Instrumentation and Controls	7.3-165
7.3.2.15	ECCS Equipment Room HVAC System - Instrumentation and Controls	7.3-165
7.3.2.15.1	Specific Conformance of the Instrumentation and Controls to IEEE 279	7.3-165
7.3.2.15.1.1	General Functional Requirements (IEEE 279, Paragraph 4.1)	7.3-165
7.3.2.15.1.2	Single Failure Criterion (IEEE 279, Paragraph 4.2)	7.3-165
7.3.2.15.1.3	Quality of Components and Modules (IEEE 279, Paragraph 4.3)	7.3-165
7.3.2.15.1.4	Equipment Qualification (IEEE 279, Paragraph 4.4)	7.3-166
7.3.2.15.1.5	Channel Integrity (IEEE 279, Paragraph 4.5)	7.3-166
7.3.2.15.1.6	Channel Independence (IEEE 279, Paragraph 4.6)	7.3-166
7.3.2.15.1.7	Control and Protection System Interaction (IEEE 279, Paragraph 4.7)	7.3-166
7.3.2.15.1.7.1	Classification of Equipment (IEEE 279, Paragraph 4.7.1)	7.3-166
7.3.2.15.1.7.2	Isolation Devices, Single Random Failure and Multiple Failures Resulting from a Credible Single Event (Paragraphs 4.7.2, 4.7.3, 4.7.4 of IEEE 279)	7.3-166
7.3.2.15.1.8	Derivation of System Inputs (IEEE 279, Paragraph 4.8)	7.3-166
7.3.2.15.1.9	Capability for Sensor Checks (IEEE 279, Paragraph 4.9)	7.3-166
7.3.2.15.1.10	Capability for Test and Calibration (IEEE 279, Paragraph 4.10)	7.3-166
7.3.2.15.1.11	Channel Bypass or Removal from Operation (IEEE 279, Paragraph 4.11)	7.3-166
7.3.2.15.1.12	Operating Bypass (IEEE 279, Paragraph 4.12)	7.3-167
7.3.2.15.1.13	Indication of Bypasses (IEEE 279, Paragraph 4.13)	7.3-167
7.3.2.15.1.14	Access to Means for Bypassing (IEEE 279, Paragraph 4.14)	7.3-167
7.3.2.15.1.15	Multiple Set Points (IEEE 279, Paragraph 4.15)	7.3-167
7.3.2.15.1.16	Completion of Protective Action Once It Is Initiated (IEEE 279, Paragraph 4.16)	7.3-167
7.3.2.15.1.17	Manual Initiation (IEEE 279, Paragraph 4.17)	7.3-167
7.3.2.15.1.18	Access to Set Points Adjustments, Calibrations, and Test Points (IEEE 279, Paragraph 4.18)	7.3-167
7.3.2.15.1.19	Identification of Protective Actions (IEEE 279, Paragraph 4.19)	7.3-167
7.3.2.15.1.20	Information Read Out (IEEE 279, Paragraph 4.20)	7.3-167
7.3.2.15.1.21	System Repair (IEEE 279, Paragraph 4.21)	7.3-167
7.3.2.15.1.22	Indentification (IEEE 279, Paragraph 4.22)	7.3-168
7.3.2.15.2	Specific Conformance of the Instrumentation and Controls to General Design Criteria 10 CFR 50, Appendix A	7.3-168
7.3.2.15.2.1	Criterion 13 - Instrumentation and Controls	7.3-168
7.3.2.16	Additional Design Considerations Analyses	7.3-168
7.3.2.16.1	General Plant Safety Analysis	7.3-168
7.3.2.16.2	Loss of Plant Instrument Air System	7.3-168
7.3.2.16.3	Loss of Cooling Water to Vital Equipment	7.3-168

TABLE OF CONTENTS (Cont'd)

		PAGE
7.3.2.17	Suppression Pool Cooling (SPC) Mode (RHR) Instrumentation and Controls	7.3-168
7.3.2.17.1	General Functional Requirements Conformance	7.3-168
7.3.2.17.2	Specific Regulatory Requirements Conformance	7.3-169
7.3.2.17.2.1	NRC Regulatory Guides	7.3-169
7.3.2.17.2.1.1	Regulatory Guides 1.6, 1.11, 1.22, 1.29, 1.30, 1.32, 1.47, 1.53, 1.62, 1.63, 1.75, 1.89, 1.97, 1.105, and 1.118	7.3-169
7.3.2.17.2.1.2	Regulatory Guide 1.100	7.3-169
7.3.2.17.2.2	10 CFR 50, Appendix A	7.3-169
7.3.2.17.2.2.1	General Design Criteria 5, 13, 19, 21, 22, 24, 35, 37	7.3-169
7.3.2.17.3	Conformance to Industry Codes and Standards	7.3-169
7.3.2.17.3.1	IEEE Standard 279, Criteria for Protection Systems for Nuclear Power Generating Stations	7.3-169
7.3.2.17.3.1.1	General Functional Requirements (IEEE 279, Paragraph 4.1)	7.3-169
7.3.2.17.3.1.1.1	Auto-Initiation	7.3-169
7.3.2.17.3.1.1.2	Appropriate Protective Action	7.3-169
7.3.2.17.3.1.1.3	Precision	7.3-169
7.3.2.17.3.1.1.4	Reliability	7.3-170
7.3.2.17.3.1.1.5	Performance Under Adverse Conditions	7.3-170
7.3.2.17.3.1.2	Single Failure Criterion (IEEE 279, Paragraph 4.2)	7.3-171
7.3.2.17.3.1.2.1	Redundancy	7.3-171
7.3.2.17.3.1.2.2	System Performance with Single Failure	7.3-171
7.3.2.17.3.1.3	Quality of Components (IEEE 279, Paragraph 4.3)	7.3-172
7.3.2.17.3.1.4	Equipment Qualification (IEEE 279, Paragraph 4.4)	7.3-172
7.3.2.17.3.1.5	Channel Integrity (IEEE 279, Paragraph 4.5)	7.3-173
7.3.2.17.3.1.6	Channel Independence (IEEE 279, Paragraph 4.6)	7.3-173
7.3.2.17.3.1.7	Control and Protection System Interaction (IEEE 279, Paragraph 4.7)	7.3-173
7.3.2.17.3.1.8	Derivation of System Inputs (IEEE 279, Paragraph 4.8)	7.3-173
7.3.2.17.3.1.9	Capability for Sensor Checks (IEEE 279, Paragraph 4.9)	7.3-173
7.3.2.17.3.1.10	Capability for Test and Calibration (IEEE 279, Paragraph 4.10)	7.3-173
7.3.2.17.3.1.11	Channel Bypass or Removal from Operation (IEEE 279, Paragraph 4.11)	7.3-173
7.3.2.17.3.1.12	Operating Bypasses (IEEE 279, Paragraph 4.12)	7.3-173
7.3.2.17.3.1.13	Indication of Bypasses (IEEE 279, Paragraph 4.13)	7.3-173
7.3.2.17.3.1.14	Access to Means for Bypassing (IEEE 279, Paragraph 4.14)	7.3-174
7.3.2.17.3.1.15	Multiple Setpoints (IEEE 279, Paragraph 4.15)	7.3-174
7.3.2.17.3.1.16	Completion of Protective Action Once Initiated (IEEE 279, Paragraph 4.16)	7.3-174
7.3.2.17.3.1.17	Manual Initiation (IEEE 279, Paragraph 4.17)	7.3-174
7.3.2.17.3.1.18	Access to Setpoint Adjustments (IEEE 279, Paragraph 4.18)	7.3-174
7.3.2.17.3.1.19	Identification of Protective Action (IEEE 279, Paragraph 4.19)	7.3-174
7.3.2.17.3.1.20	Information Readout (IEEE 279, Paragraph 4.20)	7.3-174
7.3.2.17.3.1.21	System Repair (IEEE 279, Paragraph 4.21)	7.3-174
7.3.2.17.3.1.22	Indentification (IEEE 279, Paragraph 4.22)	7.3-174
7.3.2.17.3.2	IEEE Standard 308	7.3-175
7.3.2.17.3.3	IEEE Standard 323	7.3-175

TABLE OF CONTENTS (Cont'd)

		PAGE
7.3.2.17.3.4	IEEE Standard 338	7.3-175
7.3.2.17.3.5	IEEE Standard 344	7.3-175
7.3.2.18	CGCS Equipment Cubicle Cooling System	7.3-175
7.3.2.18.1	Conformance with General Functional Requirements	7.3-175
7.3.2.18.2	Conformance with Specific Regulatory Requirements	7.3-175
7.3.2.18.2.1	Conformance with 10 CFR 50 General Design Criteria	7.3-175
7.3.2.18.2.2	Conformance to IEEE Standard 279	7.3-175
7.3.2.18.2.2.1	General Functional Requirements (IEEE 279, Paragraph 4.1)	7.3-175
7.3.2.18.2.2.2	Single Failure Criterion (IEEE 279, Paragraph 4.2)	7.3-176
7.3.2.18.2.2.3	Quality of Components and Modules (IEEE 279, Paragraph 4.3)	7.3-176
7.3.2.18.2.2.4	Equipment Qualification (IEEE 279, Paragraph 4.4)	7.3-176
7.3.2.18.2.2.5	Channel Integrity (IEEE 279, Paragraph 4.5)	7.3-176
7.3.2.18.2.2.6	Channel Independence (IEEE 279, Paragraph 4.6)	7.3-176
7.3.2.18.2.2.7	Control and Protection System Interaction (IEEE 279, Paragraph 4.7)	7.3-176
7.3.2.18.2.2.8	Derivation of System Inputs (IEEE 279, Paragraph 4.8)	7.3-176
7.3.2.18.2.2.9	Capability for Sensor Checks (IEEE 279, Paragraph 4.9)	7.3-176
7.3.2.18.2.2.10	Capability for Test and Calibration (IEEE 279, Paragraph 4.10)	7.3-177
7.3.2.18.2.2.11	Channel Bypass or Removal from Operation(IEEE 279, Paragraph 4.11)	7.3-177
7.3.2.18.2.2.12	Operating Bypasses (IEEE 279, Paragraph 4.12)	7.3-177
7.3.2.18.2.2.13	Indication of Bypasses (IEEE 279, Paragraph 4.13)	7.3-177
7.3.2.18.2.2.14	Access to Means for Bypassing (IEEE 279, Paragraph 4.14)	7.3-177
7.3.2.18.2.2.15	Multiple Setpoints (IEEE 279, Paragraph 4.15)	7.3-177
7.3.2.18.2.2.16	Completion of Protective Action Once It Is Initiated (IEEE 279, Paragraph 4.16)	7.3-177
7.3.2.18.2.2.17	Manual Initiation (IEEE 279, Paragraph 4.17)	7.3-177
7.3.2.18.2.2.18	Access to Setpoint Adjustment, Calibration, and Test Points (IEEE 279, Paragraph 4.18)	7.3-177
7.3.2.18.2.2.19	Identification of Protective Actions (IEEE 279, Paragraph 4.19)	7.3-177
7.3.2.18.2.2.20	Information Readout (IEEE 279, Paragraph 4.20)	7.3-177
7.3.2.18.2.2.21	System Repair (IEEE 279, Paragraph 4.21)	7.3-178
7.3.2.18.2.2.22	Identification (IEEE 279, Paragraph 4.21)	7.3-178
7.3.2.19	Reactor Core Isolation Cooling System	7.3-178
7.3.2.20	Feedwater Leakage Control Mode (FWLC) –Instrumentation and Controls	7.3-178
7.3.2.20.1	General Functional Requirements Conformance	7.3-178
7.3.2.20.2	Specific Regulatory Requirements Conformance	7.3-178
7.3.2.20.2.1	Regulatory Guide Conformance	7.3-178
7.3.2.20.2.1.1	Regulatory Guide 1.6	7.3-178
7.3.2.20.2.1.2	Regulatory Guide 1.29	7.3-178
7.3.2.20.2.1.3	Regulatory Guide 1.30	7.3-178
7.3.2.20.2.1.4	Regulatory Guide 1.32	7.3-178
7.3.2.20.2.1.5	Regulatory Guide 1.47	7.3-178
7.3.2.20.2.1.6	Regulatory Guide 1.53	7.3-179
7.3.2.20.2.1.7	Regulatory Guide 1.75	7.3-179
7.3.2.20.2.1.8	Regulatory Guide 1.89	7.3-179

TABLE OF CONTENTS (Cont'd)

		PAGE
7.3.2.20.2.1.9	Regulatory Guide 1.97	7.3-179
7.3.2.20.2.1.10	Regulatory Guide 1.100	7.3-179
7.3.2.20.2.1.11	Regulatory Guide 1.105	7.3-179
7.3.2.20.2.1.12	Regulatory Guide 1.118	7.3-179
7.3.2.20.2.2	Conformance to 10 CFR 50, Appendix A, General Design Criteria	7.3-179
7.3.2.20.3	Conformance to Industry Standards	7.3-180
7.3.2.20.3.1	Conformance to IEEE 279, Criterion for Protection Systems for Nuclear Power Generating Stations	7.3-180
7.3.2.20.3.1.1	General Functional Requirement (IEEE 279, Paragraph 4.1)	7.3-180
7.3.2.20.3.1.2	Single Failure Criterion (IEEE 279, Paragraph 4.2)	7.3-180
7.3.2.20.3.1.3	Quality of Components and Modules (IEEE 279, Paragraph 4.3)	7.3-180
7.3.2.20.3.1.4	Equipment Qualification (IEEE 279, Paragraph 4.4)	7.3-180
7.3.2.20.3.1.5	Channel Integrity (IEEE 279, Paragraph 4.5)	7.3-180
7.3.2.20.3.1.6	Channel Independence (IEEE 279, Paragraph 4.6)	7.3-180
7.3.2.20.3.1.7	Control and Protection System Interaction (IEEE 279, Paragraph 4.7)	7.3-180
7.3.2.20.3.1.8	Derivation of System Inputs (IEEE 279, Paragraph 4.8)	7.3-180
7.3.2.20.3.1.9	Capability for Sensor Checks (IEEE 279, Paragraph 4.9)	7.3-181
7.3.2.20.3.1.10	Capability for Test and Calibration (IEEE 279, Paragraph 4.10)	7.3-181
7.3.2.20.3.1.11	Channel Bypass or Removal from Operation (IEEE 279, Paragraph 4.11)	7.3-181
7.3.2.20.3.1.12	Operating Bypasses (IEEE 279, Paragraph 4.12)	7.3-181
7.3.2.20.3.1.13	Indication of Bypasses (IEEE 279, Paragraph 4.13)	7.3-181
7.3.2.20.3.1.14	Access to Means for Bypassing (IEEE 279, Paragraph 4.14)	7.3-181
7.3.2.20.3.1.15	Multiple Set Points (IEEE 279, Paragraph 4.15)	7.3-181
7.3.2.20.3.1.16	Completion of Protective Action Once It Is Initiated (IEEE 279, Paragraph 4.16)	7.3-181
7.3.2.20.3.1.17	Manual Initiation (IEEE 279, Paragraph 4.17)	7.3-181
7.3.2.20.3.1.18	Access to Set Point Adjustments, Calibration, and Test Points (IEEE 279, Paragraph 4.18)	7.3-181
7.3.2.20.3.1.19	Identification of Protective Actions (IEEE 279, Paragraph 4.19)	7.3-182
7.3.2.20.3.1.20	Information Readout (IEEE 279, Paragraph 4.20)	7.3-182
7.3.2.20.3.1.21	System Repair (IEEE 279, Paragraph 4.21)	7.3-182
7.3.2.20.3.1.22	Identification (IEEE 279, Paragraph 4.22)	7.3-182
7.3.2.20.3.2	Conformance to IEEE 308 – Standard Criteria for Class 1E Electric System	7.3-182
7.3.2.20.3.3	Conformance to IEEE 323 - Standard for Qualifying Class 1E Equipment for Nuclear Power Generating Stations	7.3-182
7.3.2.20.3.4	Conformance to IEEE 336 - Installation, Inspection, and Testing Requirements for Instrumentation and Electrical Equipment During the Construction of Nuclear Power Generating Stations	7.3-182
7.3.2.20.3.5	Conformance to IEEE 338 - Standard Criteria for Periodic Testing of Nuclear Power Generating Station Safety Systems	7.3-182

TABLE OF CONTENTS (Cont'd)

		PAGE
7.3.2.20.3.6	Conformance to IEEE 344 – Recommended Practices for Seismic Qualification of Class 1E Equipment for Nuclear Power Generating Stations	7.3-183
7.3.2.20.3.7	Conformance to IEEE 379 – Standard Application of the Single-Failure Criterion to Nuclear Power Generating Station Class 1E System	7.3-183
7.3.2.20.3.8	Conformance to IEEE 384 – Standard Criteria for Independence of Class 1E Equipment and Circuits	7.3-183
7.4	SYSTEMS REQUIRED FOR SAFE SHUTDOWN	7.4-1
7.4.1	Description	7.4-1
7.4.1.1	Reactor Core Isolation Cooling (RCIC) System - Instrumentation and Controls	7.4-1
7.4.1.1.1	System Identification	7.4-1
7.4.1.1.1.1	Function	7.4-1
7.4.1.1.1.2	Classification	7.4-1
7.4.1.1.2	Power Sources	7.4-1
7.4.1.1.3	Equipment Design	7.4-1
7.4.1.1.3.1	General	7.4-1
7.4.1.1.3.2	Initiating Circuits	7.4-2
7.4.1.1.3.3	Logic and Sequencing	7.4-3
7.4.1.1.3.4	Bypasses and Interlocks	7.4-3
7.4.1.1.3.5	Redundancy and Diversity	7.4-4
7.4.1.1.3.6	Actuated Devices	7.4-4
7.4.1.1.3.7	Separation	7.4-6
7.4.1.1.3.8	Testability	7.4-6
7.4.1.1.4	Environmental Considerations	7.4-7
7.4.1.1.5	Operational Considerations	7.4-7
7.4.1.1.5.1	General Information	7.4-7
7.4.1.1.5.2	Reactor Operator Information	7.4-7
7.4.1.1.5.3	Set Points	7.4-8
7.4.1.2	Standby Liquid Control System (SLCS) – Instrumentation and Controls	7.4-8
7.4.1.2.1	System Identification	7.4-8
7.4.1.2.1.1	Function	7.4-8
7.4.1.2.1.2	Classification	7.4-8
7.4.1.2.2	Power Sources	7.4-8
7.4.1.2.3	Equipment Design	7.4-8
7.4.1.2.3.1	General	7.4-8
7.4.1.2.3.2	Initiating Circuits	7.4-9
7.4.1.2.3.3	Logic and Sequencing	7.4-9
7.4.1.2.3.4	Bypasses and Interlocks	7.4-9
7.4.1.2.3.5	Redundancy and Diversity	7.4-9
7.4.1.2.3.6	Actuated Devices	7.4-9
7.4.1.2.3.7	Separation	7.4-10
7.4.1.2.3.8	Testability	7.4-10

TABLE OF CONTENTS (Cont'd)

		PAGE
7.4.1.2.4	Environmental Considerations	7.4-10
7.4.1.2.5	Operational Considerations	7.4-10
7.4.1.2.5.1	General Information	7.4-10
7.4.1.2.5.2	Reactor Operator Information	7.4-10
7.4.1.2.5.3	Set Points	7.4-12
7.4.1.3	Reactor Shutdown Cooling Mode (RHR) – Instrumentation and Controls	7.4-12
7.4.1.3.1	System Identification	7.4-12
7.4.1.3.1.1	Function	7.4-12
7.4.1.3.1.2	Classification	7.4-12
7.4.1.3.2	Power Sources	7.4-12
7.4.1.3.3	Equipment Design	7.4-13
7.4.1.3.3.1	General	7.4-13
7.4.1.3.3.2	Initiating Circuits	7.4-13
7.4.1.3.3.3	Logic and Sequencing	7.4-13
7.4.1.3.3.4	Bypasses and Interlocks	7.4-13
7.4.1.3.3.5	Redundancy and Diversity	7.4-14
7.4.1.3.3.6	Actuated Devices	7.4-14
7.4.1.3.3.7	Separation	7.4-14
7.4.1.3.3.8	Testability	7.4-14
7.4.1.3.4	Environmental Considerations	7.4-14
7.4.1.3.5	Operational Considerations	7.4-15
7.4.1.3.5.1	General Information	7.4-15
7.4.1.3.5.2	Reactor Operator Information	7.4-15
7.4.1.3.5.3	Set Points	7.4-15
7.4.1.4	Remote Shutdown System	7.4-15
7.4.1.4.1	Plant Special Capabilities Identification	7.4-15
7.4.1.4.1.1	General	7.4-15
7.4.1.4.1.2	Postulated Conditions Assumed to Exist as the Main Control Room Becomes Inaccessible	7.4-15
7.4.1.4.2	Remote Shutdown Capability Description	7.4-16
7.4.1.4.3	Remote Shutdown Capability Procedure	7.4-17
7.4.1.4.4	Remote Shutdown Capability Controls and Instrumentation - Equipment, Panels, and Displays	7.4-18
7.4.1.4.4.1	Main Control Room - Remote Shutdown Capability Interconnection Design Considerations	7.4-18
7.4.1.4.4.2	Reactor Core Isolation Cooling (RCIC) System	7.4-19
7.4.1.4.4.3	Residual Heat Removal (RHR) System	7.4-20
7.4.1.4.4.4	Nuclear Boiler System	7.4-21
7.4.1.4.4.5	Shutdown Service Water System	7.4-21
7.4.1.4.4.6	Essential Equipment Cubicle HVAC System	7.4-22
7.4.1.4.4.7	Miscellaneous Instrumentation	7.4-23
7.4.1.4.4.8	Miscellaneous Controls	7.4-23
7.4.1.4.4.9	Reactor Water Cleanup System	7.4-23
7.4.1.4.4.10	Instrument Air System	7.4-24
7.4.1.4.4.11	Main Steam Line System	7.4-24
7.4.2	Analysis	7.4-24

TABLE OF CONTENTS (Cont'd)

		PAGE
7.4.2.1	Reactor Core Isolation Cooling (RCIC) System – Instrumentation and Control	7.4-24
7.4.2.1.1	General Functional Requirements Conformance	7.4-24
7.4.2.1.2	Specific Regulatory Requirements Conformance	7.4-24
7.4.2.1.2.1	NRC Regulatory Guides Conformance	7.4-24
7.4.2.1.2.1.1	RG 1.6 -Independence Between Redundant Standby Power Sources and Between Their Distribution Systems	7.4-24
7.4.2.1.2.1.2	RG 1.11 - Instrument Lines Penetrating Primary Reactor Containment	7.4-25
7.4.2.1.2.1.3	RG 1.22 - Periodic Testing of Protection System Actuation Functions	7.4-25
7.4.2.1.2.1.4	RG 1.29 - Seismic Design Classification	7.4-25
7.4.2.1.2.1.5	RG 1.30 - Quality Assurance Requirements for the Installation, nspection, and Testing of Instrumentation andElectric Equipment	7.4-25
7.4.2.1.2.1.6	RG 1.32 - Use of IEEE 308	7.4-25
7.4.2.1.2.1.7	RG 1.47 - Bypassed and Inoperable Status Indication for Nuclear Power Plant Safety System	7.4-25
7.4.2.1.2.1.8	RG 1.53 - Application of the Single-Failure Criterion to Nuclear Power Plant Protection Systems	7.4-26
7.4.2.1.2.1.9	RG 1.62 - Manual Initiation of Protective Actions	7.4-26
7.4.2.1.2.1.10	RG 1.63 - Electric Penetration Assemblies In Containment Structures for Water-Cooled Nuclear Power Plants	7.4-26
7.4.2.1.2.1.11	RG 1.75	7.4-26
7.4.2.1.2.1.12	RG 1.89 - Qualification of Class 1E Equipment for Nuclear Power Plants	7.4-26
7.4.2.1.2.1.13	Regulatory Guide 1.97	7.4-26
7.4.2.1.2.1.14	Regulatory Guide 1.100	7.4-27
7.4.2.1.2.1.15	Regulatory Guide 1.105	7.4-27
7.4.2.1.2.1.16	Regulatory Guide 1.118	7.4-27
7.4.2.1.2.2	NRC Regulations Conformance - 10 CFR 50 Appendix A Requirements	7.4-27
7.4.2.1.2.2.1	General Design Criterion 13	7.4-27
7.4.2.1.2.2.2	General Design Criterion 20	7.4-27
7.4.2.1.2.2.3	General Design Criterion 21	7.4-27
7.4.2.1.2.2.4	General Design Criterion 22	7.4-27
7.4.2.1.2.2.4.1	General Design Criterion 24	7.4-27
7.4.2.1.2.2.5	General Design Criterion 29	7.4-27
7.4.2.1.2.2.6	General Design Criterion 34	7.4-27
7.4.2.1.2.2.7	General Design Criterion 37	7.4-27
7.4.2.1.2.3	Conformance to Industry Codes and Standards	7.4-28
7.4.2.1.2.3.1	IEEE 279	7.4-28
7.4.2.1.2.3.1.1	General Functional Requirement (IEEE 279, Paragraph 4.1)	7.4-28
7.4.2.1.2.3.1.2	Single-Failure Criterion (IEEE 279, Paragraph 4.2)	7.4-28
7.4.2.1.2.3.1.3	Quality of Components and Modules (IEEE 279, Paragraph 4.3)	7.4-28
7.4.2.1.2.3.1.4	Equipment Qualification (IEEE 279, Paragraph 4.4)	7.4-28
7.4.2.1.2.3.1.5	Channel Integrity (IEEE 279, Paragraph 4.5)	7.4-28

TABLE OF CONTENTS (Cont'd)

		PAGE
7.4.2.1.2.3.1.6	Channel Independence (IEEE 279, Paragraph 4.6)	7.4-28
7.4.2.1.2.3.1.7	Control and Protection Interaction (IEEE 279, Paragraph 4.7)	7.4-29
7.4.2.1.2.3.1.8	Derivation of System Inputs (IEEE 279, Paragraph 4.8)	7.4-29
7.4.2.1.2.3.1.9	Capability for Sensor Checks (IEEE 279, Paragraph 4.9)	7.4-29
7.4.2.1.2.3.1.10	Capability for Test and Calibration (IEEE 279, Paragraph 4.10)	7.4-29
7.4.2.1.2.3.1.11	Channel Bypass or Removal from Operation (IEEE 279, Paragraph 4.11)	7.4-29
7.4.2.1.2.3.1.12	Operating Bypasses (IEEE 279, Paragraph 4.12)	7.4-29
7.4.2.1.2.3.1.13	Indication of Bypasses (IEEE 279, Paragraph 4.13)	7.4-29
7.4.2.1.2.3.1.14	Access to Means for Bypassing (IEEE 279, Paragraph 4.14)	7.4-30
7.4.2.1.2.3.1.15	Multiple Set Points (IEEE 279, Paragraph 4.15)	7.4-30
7.4.2.1.2.3.1.16	Completion of Protective Action Once it is Initiated (IEEE 279, Paragraph 4.16)	7.4-30
7.4.2.1.2.3.1.17	Manual Actuation (IEEE 279, Paragraph 4.17)	7.4-30
7.4.2.1.2.3.1.18	Access to Set Point Adjustment (IEEE 279, Paragraph 4.18)	7.4-30
7.4.2.1.2.3.1.19	Identification of Protective Actions (IEEE 279, Paragraph 4.19)	7.4-30
7.4.2.1.2.3.1.20	Information Readout (IEEE 279, Paragraph 4.20)	7.4-30
7.4.2.1.2.3.1.21	System Repair (IEEE 279, Paragraph 4.21)	7.4-31
7.4.2.1.2.3.1.22	Identification (IEEE 279, Paragraph 4.22)	7.4-31
7.4.2.1.2.3.2	IEEE 323 General Guide for Qualifying Class 1E Electric Equipment for Nuclear Power Generating Stations	7.4-31
7.4.2.1.2.3.3	IEEE 338 Criteria for Periodic Testing of Nuclear Power Generating Station Protection Systems	7.4-31
7.4.2.1.2.3.4	IEEE 344 Guide for Seismic Qualification of Class 1 Electric Equipment for Nuclear Power Generating Stations	7.4-31
7.4.2.2	Standby Liquid Control System (SLCS) Instrumentation and Controls	7.4-31
7.4.2.2.1	General Functional Requirements Conformance	7.4-31
7.4.2.2.2	Specific Regulatory Requirements Conformance	7.4-32
7.4.2.2.2.1	NRC Regulatory Guides Conformance	7.4-32
7.4.2.2.2.1.1	Not Used	7.4-32
7.4.2.2.2.1.2	Not Used	7.4-32
7.4.2.2.2.1.3	RG 1.22 - Periodic Testing of Protection System Actuation Functions	7.4-32
7.4.2.2.2.1.4	RG 1.29 - Seismic Design Classification	7.4-32
7.4.2.2.2.1.5	RG 1.30 - Quality Assurance Requirements for the Installation, Inspection, and Testing of Instrumentation and Electric Equipment	7.4-32
7.4.2.2.2.1.6	Not Used	7.4-32
7.4.2.2.2.1.7	RG 1.47 - Bypassed and Inoperable Status Indication for Nuclear Power Plant Safety System	7.4-32
7.4.2.2.2.1.8	RG 1.53 - Application of the Single-Failure Criterion to Nuclear Power Plant Protection Systems	7.4-32
7.4.2.2.2.1.9	RG 1.62 - Manual Initiation of Protection Action	7.4-32
7.4.2.2.2.1.10	RG 1.63 - Electric Penetration Assemblies in Containment Structures for Water-Cooled Nuclear Power Plants	7.4-33
7.4.2.2.2.1.11	RC 1.75 - Physical Independence of Electrical Systems	7.4-33

TABLE OF CONTENTS (Cont'd)

		PAGE
7.4.2.2.2.1.12	RG 1.89 - Qualification of Class 1E Equipment for Nuclear Power Plants	7.4-33
7.4.2.2.2.1.13	Regulatory Guide 1.100 - Seismic Qualification of Electrical Equipment for Nuclear Power Plants	7.4-33
7.4.2.2.2.1.14	Regulatory Guide 1.105 - Instrument Set Points	7.4-33
7.4.2.2.2.1.15	Regulatory Guide 1.118 - Periodic Testing of Electrical Power and Protection Systems	7.4-33
7.4.2.2.2.2	NRC Regulations Conformance - 10 CFR 50 Appendix A Requirements	7.4-33
7.4.2.2.2.2.1	General Design Criterion 13	7.4-33
7.4.2.2.2.2.2	General Design Criterion 26	7.4-33
7.4.2.2.2.2.3	General Design Criterion 27	7.4-33
7.4.2.2.2.2.4	General Design Criterion 28	7.4-33
7.4.2.2.2.2.5	General Design Criterion 29	7.4-34
7.4.2.2.2.3	Conformance to Industry Codes and Standards	7.4-34
7.4.2.2.2.3.1	IEEE 279	7.4-34
7.4.2.2.2.3.1.1	General Functional Requirement (IEEE 279, Paragraph 4.1)	7.4-34
7.4.2.2.2.3.1.2	Single Failure Criterion (IEEE 279, Paragraph 4.2)	7.4-34
7.4.2.2.2.3.1.3	Quality of Components and Modules (IEEE 279, Paragraph 4.3)	7.4-34
7.4.2.2.2.3.1.4	Equipment Qualification (IEEE 279, Paragraph 4.4)	7.4-34
7.4.2.2.2.3.1.5	Channel Integrity (IEEE 279, Paragraph 4.5)	7.4-34
7.4.2.2.2.3.1.6	Channel Independence (IEEE 279, Paragraph 4.6)	7.4-34
7.4.2.2.2.3.1.7	Control and Protection Interaction (IEEE 279, Paragraph 4.7)	7.4-35
7.4.2.2.2.3.1.8	Derivation of System Inputs (IEEE 279, Paragraph 4.8)	7.4-35
7.4.2.2.2.3.1.9	Capability of Sensor Checks (IEEE 279, Paragraph 4.9)	7.4-35
7.4.2.2.2.3.1.10	Capability for Test and Calibration (IEEE 279, Paragraph 4.10)	7.4-35
7.4.2.2.2.3.1.11	Channel Bypass or Removal from Operation (IEEE 279, Paragraph 4.11)	7.4-35
7.4.2.2.2.3.1.12	Operating Bypass (IEEE 279, Paragraph 4.12)	7.4-35
7.4.2.2.2.3.1.13	Indication of Bypass (IEEE 279, Paragraph 4.13)	7.4-35
7.4.2.2.2.3.1.14	Access to Means for Bypass (IEEE 279, Paragraph 4.14)	7.4-35
7.4.2.2.2.3.1.15	Multiple Set Points (IEEE 279, Paragraph 4.15)	7.4-35
7.4.2.2.2.3.1.16	Completion of Protective Action Once it is Initiated (IEEE 279, Paragraph 4.16)	7.4-36
7.4.2.2.2.3.1.17	Manual Initiation (IEEE 279, Paragraph 4.17)	7.4-36
7.4.2.2.2.3.1.18	Access to Set Point Adjustments, Calibration, and Test Points (IEEE 279, Paragraph 4.18)	7.4-36
7.4.2.2.2.3.1.19	Identification of Protective Actions (IEEE 279, Paragraph 4.19)	7.4-36
7.4.2.2.2.3.1.20	Information Read-out (IEEE 279, Paragraph 4.20)	7.4-36
7.4.2.2.2.3.1.21	System Repair (IEEE 279, Paragraph 4.21)	7.4-36
7.4.2.2.2.3.1.22	Identification (IEEE 279, Paragraph 4.22)	7.4-36
7.4.2.2.2.3.2	IEEE 308 Criteria for Class 1E Power Systems for Nuclear Power Generating Stations	7.4-36
7.4.2.2.2.3.3	IEEE 323 General Guide for Qualifying Class I Electric Equipment for Nuclear Power Generating Stations	7.4-36

TABLE OF CONTENTS (Cont'd)

		PAGE
7.4.2.2.2.3.4	IEEE 338 Criteria for Periodic Testing of Nuclear Power Generating Station Protection Systems	7.4-37
7.4.2.2.2.3.5	IEEE 344 - Guide for Seismic Qualification of Class I Electric Equipment for Nuclear Power Generating Stations	7.4-37
7.4.2.3	Reactor Shutdown Cooling Mode (RHR) – Instrumentation and Controls	7.4-37
7.4.2.3.1	General Functional Requirements Conformance	7.4-37
7.4.2.3.2	Specific Regulatory Requirements Conformance	7.4-38
7.4.2.3.2.1	Conformance to NRC Regulatory Guides	7.4-38
7.4.2.3.2.1.1	Regulatory Guide 1.6	7.4-38
7.4.2.3.2.1.2	Regulatory Guide 1.22	7.4-38
7.4.2.3.2.1.3	Regulatory Guide 1.29	7.4-38
7.4.2.3.2.1.4	Regulatory Guide 1.32	7.4-38
7.4.2.3.2.1.5	Regulatory Guide 1.47	7.4-38
7.4.2.3.2.1.6	Regulatory Guide 1.53	7.4-38
7.4.2.3.2.1.7	Regulatory Guide 1.62	7.4-38
7.4.2.3.2.2	Conformance to NRC Regulations - 10 CFR 50 Appendix A Requirements	7.4-38
7.4.2.3.2.2.1	Criteria 19 through 24	7.4-38
7.4.2.3.2.2.2	General Design Criterion 34 - Residual Heat Removal	7.4-38
7.4.2.3.2.3	Conformance to Industry Codes and Standards	7.4-39
7.4.2.3.2.3.1	IEEE 279	7.4-39
7.4.2.3.2.3.2	IEEE 308	7.4-39
7.4.2.3.2.3.3	IEEE 323	7.4-39
7.4.2.3.2.3.4	IEEE 344	7.4-39
7.4.2.3.2.3.5	IEEE 379	7.4-39
7.4.2.4	Remote Shutdown System (RSS)	7.4-39
7.4.2.4.1	General Functional Requirements Conformance	7.4-39
7.4.2.4.2	Specific Regulatory Requirements Conformance	7.4-39
7.4.2.4.2.1	NRC Regulatory Guides Conformance	7.4-39
7.4.2.4.2.1.1	Regulatory Guide 1.29 - Seismic Design Classification	7.4-39
7.4.2.4.2.1.2	R.G. 1.68 - Initial Startup Test Program to Demonstrate Remote Shutdown	7.4-39
7.4.2.4.2.1.3	R.G.1.75 - Physical Independence of Electric Systems	7.4-40
7.4.2.4.2.1.4	Regulatory Guide 1.89 Qualification of Class IE Equipment for Nuclear Power Plants	7.4-40
7.4.2.4.2.1.5	Regulatory Guide 1.100 Seismic Qualification of Electrical Equipment for Nuclear Power Plants	7.4-40
7.4.2.4.2.2	NRC Regulations Conformance - 10 CFR 50 Appendix A Requirements	7.4-40
7.4.2.4.2.2.1	General Design Criteria 19	7.4-40
7.4.2.4.2.3	Conformance to Industry Codes and Standards	7.4-40
7.4.2.4.2.3.1	IEEE 279 - Criteria for Protection Systems for Nuclear Power Generating Stations	7.4-40
7.4.2.4.2.3.2	IEEE 323 - General Guide for Qualifying Class I Electric Equipment for Nuclear Power Generating Stations	7.4-40

TABLE OF CONTENTS (Cont'd)

		PAGE
7.4.2.4.2.3.3	IEEE 344 - Guide for Seismic Qualification of Class I Electric Equipment for Nuclear Power Generating Stations	7.4-40
7.5	SAFETY RELATED DISPLAY INSTRUMENTATION	7.5-1
7.5.1	Description	7.5-1
7.5.1.1	General	7.5-1
7.5.1.1.1	Principal Plant Console (P680)	7.5-2
7.5.1.1.2	Standby Information Panel (P678)	7.5-2
7.5.1.1.3	Reactor Core Cooling System Benchboard (P601)	7.5-2
7.5.1.1.4	Balance of Plant Benchboards (P800, P801, P870)	7.5-2
7.5.1.1.5	Diesel Generator Benchboard (P877)	7.5-3
7.5.1.2	Normal Operation	7.5-3
7.5.1.3	Abnormal Transient Occurrences	7.5-3
7.5.1.4	Accident Conditions	7.5-3
7.5.1.4.1	Initial Accident Event	7.5-3
7.5.1.4.2	Post-Accident Tracking	7.5-3
7.5.1.4.2.1	Reactor Water Level	7.5-4
7.5.1.4.2.2	Reactor Pressure	7.5-5
7.5.1.4.2.3	Reactor Shutdown, Isolation, and Core Cooling Indication	7.5-5
7.5.1.4.2.3.1	Reactor Operator Information and Observations	7.5-5
7.5.1.4.2.3.2	System Operation Information-Display Equipment	7.5-7
7.5.1.4.2.3.3	System Operation Information-Display Equipment Qualification	7.5-9
7.5.1.4.2.4	Drywell and Containment Indications	7.5-9
7.5.1.4.2.5	Main Control Room HVAC System	7.5-13
7.5.1.4.2.6	Shutdown Service Water System	7.5-13
7.5.1.4.2.7	Standby Gas Treatment System (SGTS)	7.5-13
7.5.1.4.2.8	Combustible Gas Control System	7.5-14
7.5.1.4.2.8.1	Drywell - Containment Mixing System	7.5-14
7.5.1.4.2.8.2	Hydrogen Recombiner System	7.5-14
7.5.1.4.2.9	Not Used	7.5-14
7.5.1.4.2.10	Diesel Generator Room Ventilation System	7.5-14
7.5.1.4.2.10.1	Indication	7.5-14
7.5.1.4.2.11	Essential Switchgear Heat Removal HVAC System	7.5-14
7.5.1.3.2.11.1	Indication	7.5-14
7.5.1.4.2.12	ECCS Equipment Room Cooling-HVAC System	7.5-15
7.5.1.4.2.12.1	Indication	7.5-15
7.5.1.4.2.13	Shutdown Service Water Pump Room Cooling System	7.5-15
7.5.1.4.2.13.1	Indication	7.5-15
7.5.1.4.2.14	Secondary Containment Area Temperature Monitoring Instrumentation	7.5-15
7.5.1.4.2.15	Secondary Containment Water Level Monitoring Instrumentation	7.5-16
7.5.2	Analysis	7.5-17
7.5.2.1	General Functional Requirements	7.5-17
7.5.2.1.1	Design Criteria	7.5-17
7.5.2.1.1.1	Power Generation Control Complex Criteria	7.5-17

TABLE OF CONTENTS (Cont'd)

		PAGE
7.5.2.1.1.2	Nuclenet Design and Operational Criteria Compliance	7.5-17
7.5.2.1.1.2.1	Design Criteria	7.5-17
7.5.2.1.1.2.2	Operating Criteria	7.5-19
7.5.2.1.2	Principal Plant Console (P680)	7.5-19
7.5.2.1.3	Standby Information Panel (P678)	7.5-19
7.5.2.1.4	Reactor Core Cooling Systems Benchboard (P601)	7.5-19
7.5.2.1.5	Balance of Plant Benchboards (P800, P801, P870)	7.5-20
7.5.2.1.6	Diesel Generator Benchboard (P877)	7.5-21
7.5.2.2	Normal Operation	7.5-21
7.5.2.3	Abnormal Transient Occurrences	7.5-21
7.5.2.4	Accident Conditions	7.5-22
7.5.2.4.1	Initial Accident Event	7.5-22
7.5.2.4.2	Post-Accident Tracking	7.5-22
7.5.2.4.3	Safe Shutdown Display	7.5-24
7.5.2.4.4	Engineered Safety Feature Operation Display	7.5-24
7.5.2.5	Specific Regulatory Requirements	7.5-25
7.5.2.5.1	Conformance to IEEE-279	7.5-25
7.5.2.5.1.1	General Functional Requirement (IEEE-279, Paragraph 4.1)	7.5-25
7.5.2.5.1.2	Single Failure Criterion (IEEE-279, Paragraph 4.2)	7.5-25
7.5.2.5.1.3	Quality of Indicators (IEEE-279, Paragraph 4.3)	7.5-25
7.5.2.5.1.4	Equipment Qualification (IEEE-279, Paragraph 4.4)	7.5-25
7.5.2.5.1.5	Channel Integrity (IEEE-279, Paragraph 4.5)	7.5-25
7.5.2.5.1.6	Channel Independence (IEEE-279, Paragraph 4.6)	7.5-25
7.5.2.5.1.7	Control and Protection System Interaction (IEEE-279, Paragraph 4.7)	7.5-25
7.5.2.5.1.8	Derivation of System Inputs (IEEE-279, Paragraph 4.8)	7.5-26
7.5.2.5.1.9	Capability for Sensor Checks (IEEE-279, Paragraph 4.9)	7.5-26
7.5.2.5.1.10	Capability for Test and Calibration (IEEE-279, Paragraph 4.10)	7.5-26
7.5.2.5.1.11	Channel Bypass (IEEE-279, Paragraph 4.11)	7.5-26
7.5.2.5.1.12	Operating Bypasses (IEEE-279, Paragraph 4.12)	7.5-26
7.5.2.5.1.13	Indication of Bypass (IEEE-279, Paragraph 4.13)	7.5-26
7.5.2.5.1.14	Access to Means for Bypassing (IEEE-279, Paragraph 4.14)	7.5-26
7.5.2.5.1.15	Multiple Setpoints (IEEE-279, Paragraph 4.15)	7.5-26
7.5.2.5.1.16	Completion of Protective Action Once It Is Initiated (IEEE-279, Paragraph 4.16)	7.5-26
7.5.2.5.1.17	Manual Actuation (IEEE-279, Paragraph 4.17)	7.5-26
7.5.2.5.1.18	Access to Setpoints (IEEE-279, Paragraph 4.18)	7.5-26
7.5.2.5.1.19	Identification of Protective Action (IEEE-279, Paragraph 4.19)	7.5-26
7.5.2.5.1.20	Information Read Out (IEEE-279, Paragraph 4.20)	7.5-27
7.5.2.5.1.21	System Repair (IEEE-279, Paragraph 4.21)	7.5-27
7.5.2.5.1.22	Identification (IEEE-279, Paragraph 4.22)	7.5-27
7.5.2.5.2	Conformance with IEEE-323	7.5-27
7.5.2.5.3	Conformance with IEEE-344	7.5-27
7.5.2.5.4	Regulatory Guide 1.22, Periodic Testing of Protection System Actuation Function	7.5-27
7.5.2.5.5	Regulatory Guide 1.47, Bypassed and Inoperable Status Indicator for Nuclear Power Plant Safety Systems	7.5-27

TABLE OF CONTENTS (Cont'd)

		PAGE
7.5.2.5.6	Regulatory Guide 1.53, Application of the Single Failure Criterion to Nuclear Power Plant Protection Systems	7.5-27
7.5.2.5.7	Regulatory Guide 1.97	7.5-27
7.5.2.5.8	Other Regulatory Guides	7.5-28
7.5.2.5.9	Conformance to 10 CFR 50	7.5-28
7.6	ALL OTHER INSTRUMENTATION SYSTEMS REQUIRED FOR SAFETY	7.6-1
7.6.1	Description	7.6-1
7.6.1.1	Refueling Interlocks System - Instrumentation and Controls	7.6-2
7.6.1.1.1	System Identification	7.6-2
7.6.1.1.2	Power Sources	7.6-2
7.6.1.1.3	Equipment Design	7.6-2
7.6.1.1.3.1	Circuit Description	7.6-2
7.6.1.1.3.2	Logic and Sequencing	7.6-2
7.6.1.1.3.3	Interlocks	7.6-3
7.6.1.1.3.4	Redundancy and Diversity	7.6-3
7.6.1.1.3.5	Actuated Devices	7.6-4
7.6.1.1.3.6	Separation	7.6-4
7.6.1.1.3.7	Testability	7.6-4
7.6.1.1.4	Environmental Considerations	7.6-4
7.6.1.1.5	Operational Considerations	7.6-5
7.6.1.1.5.1	General Information	7.6-5
7.6.1.1.5.2	Reactor Operator Information	7.6-5
7.6.1.1.5.3	Set Points	7.6-5
7.6.1.2	Process Radiation Monitoring System – Instrumentation and Controls	7.6-5
7.6.1.2.1	Main Steam Line Radiation Monitoring Subsystem	7.6-5
7.6.1.2.1.1	Design Basis	7.6-5
7.6.1.2.1.1.1	Safety Design Basis	7.6-5
7.6.1.2.1.1.2	Specific Regulatory Requirements	7.6-6
7.6.1.2.1.1.3	Power Generation Design Basis	7.6-6
7.6.1.2.1.2	Subsystem Identification	7.6-6
7.6.1.2.1.3	Power Sources	7.6-6
7.6.1.2.1.4	Equipment Design	7.6-6
7.6.1.2.1.5	Initiating Circuits	7.6-7
7.6.1.2.1.6	Logic and Sequencing	7.6-7
7.6.1.2.1.7	Bypasses and Interlocks	7.6-7
7.6.1.2.1.8	Redundancy and Diversity	7.6-7
7.6.1.2.1.9	Testability	7.6-7
7.6.1.2.1.10	Environmental Considerations	7.6-7
7.6.1.2.1.11	Operational Considerations	7.6-8
7.6.1.2.1.12	Setpoints	7.6-8
7.6.1.2.2	Containment Fuel Transfer Pool Vent Plenum Radiation Monitoring Subsystem	7.6-8
7.6.1.2.2.1	Subsystem Identification	7.6-8

TABLE OF CONTENTS (Cont'd)

		PAGE
7.6.1.2.2.2	Power Sources	7.6-9
7.6.1.2.2.3	Equipment Design	7.6-9
7.6.1.2.2.3.1	Circuit Description	7.6-9
7.6.1.2.2.3.2	Logic and Sequencing	7.6-10
7.6.1.2.2.3.3	Bypasses and Interlocks	7.6-10
7.6.1.2.2.3.4	Redundancy and Diversity	7.6-10
7.6.1.2.2.3.5	Actuated Devices	7.6-10
7.6.1.2.2.3.6	Separation	7.6-10
7.6.1.2.2.3.7	Testability	7.6-10
7.6.1.2.2.4	Environmental Considerations	7.6-10
7.6.1.2.2.5	Operational Considerations	7.6-11
7.6.1.2.2.5.1	General Information	7.6-11
7.6.1.2.2.5.2	Reactor Operator Information	7.6-11
7.6.1.2.2.5.3	Setpoints	7.6-11
7.6.1.2.3	Containment Building Exhaust Duct Radiation Monitoring Subsystem	7.6-11
7.6.1.2.3.1	Subsystem Identification	7.6-11
7.6.1.2.3.2	Power Sources	7.6-11
7.6.1.2.3.3	Equipment Design	7.6-11
7.6.1.2.3.4	Environmental Considerations	7.6-12
7.6.1.2.3.5	Operational Considerations	7.6-12
7.6.1.2.4	Fuel Building Ventilation Exhaust Radiation Monitoring Subsystem	7.6-12
7.6.1.2.4.1	Subsystem Identification	7.6-12
7.6.1.2.4.2	Power Sources	7.6-12
7.6.1.2.4.3	Equipment Design	7.6-12
7.6.1.2.4.4	Environmental Considerations	7.6-12
7.6.1.2.4.5	Operational Considerations	7.6-12
7.6.1.2.5	Control Room Air Intakes Radiation Monitoring Subsystem	7.6-12
7.6.1.2.5.1	Power Sources	7.6-12
7.6.1.2.5.2	Equipment Design	7.6-12
7.6.1.2.5.3	Environmental Considerations	7.6-13
7.6.1.2.5.4	Operational Considerations	7.6-13
7.6.1.2.6	Standby Gas Treatment System (SGTS) Exhaust High Range Radiation Monitoring System - Instrumentation and Controls	7.6-13
7.6.1.2.6.1	System Identification	7.6-13
7.6.1.2.6.2	Power Sources	7.6-15
7.6.1.2.6.3	Equipment Design	7.6-15
7.6.1.2.6.3.1	Sample Flow Path Description	7.6-15
7.6.1.2.6.3.2	Circuit Description	7.6-15
7.6.1.2.6.3.3	Logic and Sequencing	7.6-18
7.6.1.2.6.3.4	Bypasses and Interlocks	7.6-18
7.6.1.2.6.3.5	Redundancy and Diversity	7.6-18
7.6.1.2.6.3.6	Actuated Devices	7.6-18
7.6.1.2.6.3.7	Separation	7.6-19
7.6.1.2.6.3.8	Testability	7.6-19
7.6.1.2.6.3.9	Environmental Considerations	7.6-19

TABLE OF CONTENTS (Cont'd)

		PAGE
7.6.1.2.6.4	Operational Considerations	7.6-19
7.6.1.2.6.4.1	General Information	7.6-19
7.6.1.2.6.4.2	Reactor Operator Information	7.6-19
7.6.1.2.6.4.3	Setpoints	7.6-19
7.6.1.2.7	Common Station HVAC Exhaust High-Range Radiation Monitoring System - Instrumentation and Controls	7.6-19
7.6.1.2.7.1	System Identification	7.6-19
7.6.1.2.7.2	Power Sources	7.6-21
7.6.1.2.7.3	Equipment Design	7.6-21
7.6.1.2.7.3.1	Sample Flow Path Description	7.6-21
7.6.1.2.7.3.2	Circuit Description	7.6-21
7.6.1.2.7.3.3	Logic and Sequencing	7.6-21
7.6.1.2.7.3.4	Bypasses and Interlocks	7.6-22
7.6.1.2.7.3.5	Redundancy and Diversity	7.6-23
7.6.1.2.7.3.6	Actuated Devices	7.6-23
7.6.1.2.7.3.7	Separation	7.6-23
7.6.1.2.7.3.8	Testability	7.6-23
7.6.1.2.7.3.9	Environmental Considerations	7.6-23
7.6.1.2.7.4	Operational Considerations	7.6-23
7.6.1.2.8	Continuous Containment Purge Exhaust Duct Radiation Monitoring Subsystem	7.6-23
7.6.1.2.8.1	Subsystem Identification	7.6-23
7.6.1.2.8.2	Power Sources	7.6-23
7.6.1.2.8.3	Equipment Design	7.6-23
7.6.1.2.8.4	Environmental Considerations	7.6-23
7.6.1.2.8.5	Operational Considerations	7.6-24
7.6.1.3	High Pressure/Low Pressure Systems Interlock Protection System	7.6-24
7.6.1.3.1	Function Identification	7.6-24
7.6.1.3.2	Power Sources	7.6-24
7.6.1.3.3	Equipment Design	7.6-24
7.6.1.3.3.1	Circuit Description	7.6-25
7.6.1.3.3.2	Logic and Sequencing	7.6-25
7.6.1.3.3.3	Bypasses and Interlocks	7.6-25
7.6.1.3.3.4	Redundancy and Diversity	7.6-26
7.6.1.3.3.5	Actuated Devices	7.6-26
7.6.1.3.3.6	Separation	7.6-26
7.6.1.3.3.7	Testability	7.6-26
7.6.1.3.4	Environmental Considerations	7.6-26
7.6.1.3.5	Operational Considerations	7.6-26
7.6.1.3.5.1	General Information	7.6-26
7.6.1.3.5.2	Reactor Operator Information	7.6-26
7.6.1.3.5.3	Set Points	7.6-26
7.6.1.4	Leak Detection System - Instrumentation and Controls	7.6-27
7.6.1.4.1	System Identification	7.6-27
7.6.1.4.2	Power Sources	7.6-27
7.6.1.4.3	Equipment Design	7.6-27

TABLE OF CONTENTS (Cont'd)

		PAGE
7.6.1.4.3.1	General	7.6-27
7.6.1.4.3.2	Main Steam Line Leak Detection	7.6-28
7.6.1.4.3.2.1	Subsystem Identification	7.6-28
7.6.1.4.3.3	RCIC System Leak Detection	7.6-28
7.6.1.4.3.3.1	Subsystem Identification	7.6-28
7.6.1.4.3.3.2	RCIC Area and MSL Pipe Tunnel Temperature Monitoring	7.6-29
7.6.1.4.3.3.2.1	Circuit Description	7.6-29
7.6.1.4.3.3.2.2	Subsystem Logic and Sequencing	7.6-29
7.6.1.4.3.3.2.3	Subsystem Bypasses and Interlocks	7.6-29
7.6.1.4.3.3.2.4	Subsystem Redundancy and Diversity	7.6-30
7.6.1.4.3.3.2.5	Subsystem Testability	7.6-30
7.6.1.4.3.3.3	Not Used	7.6-30
7.6.1.4.3.3.4	RCIC Flow Rate Monitoring	7.6-30
7.6.1.4.3.3.4.1	Circuit Description	7.6-30
7.6.1.4.3.3.4.2	Logic and Sequencing	7.6-30
7.6.1.4.3.3.4.3	Bypass and Interlocks	7.6-30
7.6.1.4.3.3.4.4	Redundancy and Diversity	7.6-30
7.6.1.4.3.4	RHR System Leak Detection	7.6-31
7.6.1.4.3.4.1	Subsystem Identification	7.6-31
7.6.1.4.3.4.2	RHR Steam Process Line Pressure Monitoring (Not applicable to RHR)	7.6-31
7.6.1.4.3.4.3	RHR Flow Rate Monitoring (Not applicable to RHR)	7.6-31
7.6.1.4.3.4.4	RHR Process Line Pressure Monitoring (Not applicable to RHR)	7.6-31
7.6.1.4.3.5	Reactor Water Clean-Up System Leak Detection	7.6-31
7.6.1.4.3.5.1	Subsystem Identification	7.6-31
7.6.1.4.4	System and Subsystem Separation Criteria	7.6-32
7.6.1.4.5	System and Subsystem Testability	7.6-32
7.6.1.4.6	System and Subsystem Environmental Considerations	7.6-32
7.6.1.4.7	System and Subsystem Operational Considerations	7.6-32
7.6.1.5	Neutron Monitoring System - Instrumentation and Controls	7.6-33
7.6.1.5.1	System Identification	7.6-33
7.6.1.5.2	Power Source	7.6-33
7.6.1.5.3	Source Range Monitor (SRM) Subsystem	7.6-33
7.6.1.5.3.1	Equipment Design	7.6-33
7.6.1.5.4	Intermediate Range Monitor (IRM) Subsystem	7.6-33
7.6.1.5.4.1	Equipment Design	7.6-33
7.6.1.5.4.1.1	Circuit Description	7.6-33
7.6.1.5.4.1.1.1	Bypasses and Interlocks	7.6-35
7.6.1.5.4.1.2	Redundancy	7.6-35
7.6.1.5.4.1.3	Testability	7.6-35
7.6.1.5.4.2	Environmental Considerations	7.6-35
7.6.1.5.4.3	Operational Considerations	7.6-35
7.6.1.5.5	Local Power Range Monitor (LPRM) Subsystem	7.6-35
7.6.1.5.5.1	Equipment Design	7.6-35
7.6.1.5.5.1.1	Circuit Description	7.6-35
7.6.1.5.5.1.2	Bypasses and Interlocks	7.6-37

TABLE OF CONTENTS (Cont'd)

		PAGE
7.6.1.5.5.1.3	Redundancy	7.6-37
7.6.1.5.5.1.4	Testability	7.6-37
7.6.1.5.5.2	Environmental Considerations	7.6-38
7.6.1.5.5.3	Operational Considerations	7.6-38
7.6.1.5.6	Average Power Range Monitor (APRM) Subsystem	7.6-38
7.6.1.5.6.1	Equipment Design	7.6-38
7.6.1.5.6.1.1	Description	7.6-38
7.6.1.5.6.1.2	Bypasses and Interlocks	7.6-39
7.6.1.5.6.1.3	Redundancy	7.6-39
7.6.1.5.6.1.4	Testability	7.6-39
7.6.1.5.6.2	Environmental Considerations	7.6-39
7.6.1.5.6.3	Operational Considerations	7.6-39
7.6.1.5.7	Oscillation Power Range Monitor (OPRM) System	7.6-39
7.6.1.5.7.1	Equipment Design	7.6-39
7.6.1.5.7.1.1	Description	7.6-39
7.6.1.5.7.1.2	Bypasses and Interlocks	7.6-41
7.6.1.5.7.1.3	Redundancy	7.6-41
7.6.1.5.7.1.4	Testability	7.6-41
7.6.1.5.7.2	Environmental Considerations	7.6-41
7.6.1.5.7.3	Operational Considerations	7.6-41
7.6.1.5.8	Traversing In-Core Probe (TIP) Subsystem	7.6-41
7.6.1.6	Not Used	7.6-42
7.6.1.7	Rod Pattern Control System (RPCS) – Instrumentation and Controls	7.6-42
7.6.1.7.1	System Identification	7.6-42
7.6.1.7.2	Power Sources	7.6-42
7.6.1.7.3	Equipment Design	7.6-42
7.6.1.7.3.1	Bypass of the RPCS	7.6-44
7.6.1.7.4	Environmental Considerations	7.6-44
7.6.1.7.5	Operational Considerations	7.6-44
7.6.1.7.5.1	General Information	7.6-44
7.6.1.7.6	Separation	7.6-45
7.6.1.8	End of Cycle Recirculation Pump Trip (EOC-RPT) System - Instrumentation and Controls	7.6-45
7.6.1.8.1	System Identification	7.6-45
7.6.1.8.1.1	Safety Classification	7.6-45
7.6.1.8.1.2	Reference Design	7.6-45
7.6.1.8.2	Power Sources	7.6-45
7.6.1.8.3	Equipment Design	7.6-45
7.6.1.8.3.1	Initiating Circuits	7.6-45
7.6.1.8.3.2	Logic	7.6-46
7.6.1.8.3.3	Actuated Devices	7.6-46
7.6.1.8.3.4	Separation	7.6-46
7.6.1.8.3.5	Testability	7.6-46
7.6.1.8.4	Environmental Considerations	7.6-46
7.6.1.8.5	Operational Considerations	7.6-46
7.6.1.8.5.1	General Information	7.6-46

TABLE OF CONTENTS (Cont'd)

		PAGE
7.6.1.8.5.2	Reactor Operator Information	7.6-47
7.6.1.8.5.3	Setpoints	7.6-47
7.6.1.8.6	IEEE 279 Design Basis Considerations	7.6-47
7.6.1.9	Fuel Pool Cooling System	7.6-48
7.6.1.9.1	System Identification	7.6-48
7.6.1.9.2	Power Sources	7.6-48
7.6.1.9.3	Equipment Design	7.6-48
7.6.1.9.4	Circuit Description	7.6-48
7.6.1.9.4.1	Instrumentation	7.6-48
7.6.1.9.4.2	Controls	7.6-49
7.6.1.9.5	Bypasses and Interlocks	7.6-50
7.6.1.9.6	Redundancy and Diversity	7.6-50
7.6.1.9.7	Testability	7.6-50
7.6.1.9.8	Environmental Consideration	7.6-50
7.6.1.9.9	Operational Considerations	7.6-50
7.6.1.9.9.1	Normal Operations	7.6-50
7.6.1.9.9.2	Infrequent Operations	7.6-51
7.6.1.10	Containment Atmosphere Monitoring System Instrumentation and Controls	7.6-52
7.6.1.10.1	System Identification	7.6-52
7.6.1.10.2	Power Sources	7.6-52
7.6.1.10.3	Initiating Circuits	7.6-52
7.6.1.10.4	Logic and Sequencing	7.6-53
7.6.1.10.5	Bypasses and Interlocks	7.6-53
7.6.1.10.6	Redundancy and Diversity	7.6-53
7.6.1.10.7	Actuated Devices	7.6-53
7.6.1.10.8	Separation	7.6-54
7.6.1.10.9	Testability	7.6-54
7.6.1.10.10	Environmental Consideration	7.6-54
7.6.1.10.11	Operational Considerations	7.6-54
7.6.1.10.11.1	General Information	7.6-54
7.6.1.10.11.2	Reactor Operator Information	7.6-55
7.6.1.10.11.3	Setpoints	7.6-57
7.6.1.11	Safety Relief Valve Monitoring (SRVM) System Instrumentation	7.6-57
7.6.1.11.1	System Identification	7.6-57
7.6.1.11.2	Power Source	7.6-57
7.6.1.11.3	Equipment Design	7.6-57
7.6.1.11.3.1	Circuit Description	7.6-57
7.6.1.11.3.2	Logic and Sequencing	7.6-58
7.6.1.11.3.3	Bypasses and Interlocks	7.6-58
7.6.1.11.3.4	Redundancy and Diversity	7.6-58
7.6.1.11.3.5	Actuated Devices	7.6-58
7.6.1.11.3.6	Separation	7.6-58
7.6.1.11.3.7	Testability	7.6-58
7.6.1.11.4	Environmental Considerations	7.6-59
7.6.1.11.5	Operational Considerations	7.6-59
7.6.1.11.5.1	Reactor Operator Information	7.6-59

TABLE OF CONTENTS (Cont'd)

		PAGE
7.6.1.11.5.2	Setpoints	7.6-59
7.6.2	Analysis	7.6-59
7.6.2.1	Refueling Interlocks System - Instrumentation and Controls	7.6-59
7.6.2.1.1	General Functional Requirements Conformance	7.6-59
7.6.2.1.2	Specific Regulatory Requirement Conformance	7.6-60
7.6.2.2	Process Radiation Monitoring System Instrumentation and Controls	7.6-60
7.6.2.2.1	Main Steam Line Radiation Monitoring Subsystem	7.6-60
7.6.2.2.2	Containment Fuel Transfer Pool Vent Plenum Radiation Monitoring Subsystem	7.6-60
7.6.2.2.2.1	Conformance to General Functional Requirement	7.6-60
7.6.2.2.2.2	Conformance to Specific Regulatory Requirements	7.6-60
7.6.2.2.2.2.1	Regulatory Guides Conformance	7.6-60
7.6.2.2.2.2.1.1	Regulatory Guide 1.22	7.6-60
7.6.2.2.2.2.1.2	Regulatory Guide 1.75	7.6-60
7.6.2.2.2.2.1.3	Regulatory Guide 1.53	7.6-60
7.6.2.2.2.2.1.4	Regulatory Guide 1.89	7.6-61
7.6.2.2.2.2.1.5	Regulatory Guide 1.100	7.6-61
7.6.2.2.2.2.1.6	Regulatory Guide 1.105	7.6-61
7.6.2.2.2.2.1.7	Regulatory Guide 1.118	7.6-61
7.6.2.2.2.2.2	Conformance to 10 CFR 50, Appendix A	7.6-61
7.6.2.2.2.3	Conformance to Industry Standards	7.6-62
7.6.2.2.2.3.1	IEEE-279	7.6-62
7.6.2.2.2.3.1.1	General Functional Requirement (IEEE-279, Paragraph 4.1)	7.6-62
7.6.2.2.2.3.1.2	Single-Failure Criterion (IEEE-279, Paragraph 4.2)	7.6-62
7.6.2.2.2.3.1.3	Quality of Components and Modules (IEEE-279, Paragraph 4.3)	7.6-62
7.6.2.2.2.3.1.4	Equipment Qualification (IEEE-279, Paragraph 4.4)	7.6-62
7.6.2.2.2.3.1.5	Channel Integrity (IEEE-279, Paragraph 4.5)	7.6-62
7.6.2.2.2.3.1.6	Channel Independence (IEEE-279, Paragraph 4.6)	7.6-62
7.6.2.2.2.3.1.7	Control and Protection Interaction (IEEE-279, Paragraph 4.7)	7.6-62
7.6.2.2.2.3.1.8	Derivation of System Inputs (IEEE-279, Paragraph 4.8)	7.6-62
7.6.2.2.2.3.1.9	Capability of Sensor Checks (IEEE-279, Paragraph 4.9)	7.6-63
7.6.2.2.2.3.1.10	Capability for Test and Calibration (IEEE-279, Paragraph 4.10)	7.6-63
7.6.2.2.2.3.1.11	Channel Bypass or Removal from Operation (IEEE-279, Paragraph 4.11)	7.6-63
7.6.2.2.2.3.1.12	Operating Bypasses (IEEE-279, Paragraph 4.12)	7.6-63
7.6.2.2.2.3.1.13	Indication of Bypasses (IEEE-279, Paragraph 4.13)	7.6-63
7.6.2.2.2.3.1.14	Access to Means for Bypassing (IEEE-279, Paragraph 4.14)	7.6-63
7.6.2.2.2.3.1.15	Multiple Setpoints (IEEE-279, Paragraph 4.15)	7.6-63
7.6.2.2.2.3.1.16	Completion of Protective Action Once it is Initiated (IEEE-279, Paragraph 4.16)	7.6-63
7.6.2.2.2.3.1.17	Manual Actuation (IEEE-279, Paragraph 4.17)	7.6-63
7.6.2.2.2.3.1.18	Access to Setpoint Adjustments, Calibration, and Test Points (IEEE-279, Paragraph 4.18)	7.6-63
7.6.2.2.2.3.1.19	Identification of Protective Actions (IEEE-279, Paragraph 4.19)	7.6-63
7.6.2.2.2.3.1.20	Information Readout (IEEE-279, Paragraph 4.20)	7.6-64

TABLE OF CONTENTS (Cont'd)

		PAGE
7.6.2.2.2.3.1.21	System Repair (IEEE-279, Paragraph 4.21)	7.6-64
7.6.2.2.2.3.1.22	Identification (IEEE-279, Paragraph 4.22)	7.6-64
7.6.2.2.2.3.2	IEEE-323	7.6-64
7.6.2.2.2.3.3	IEEE-338	7.6-64
7.6.2.2.2.3.4	IEEE-344	7.6-64
7.6.2.2.2.3.5	IEEE-379	7.6-64
7.6.2.2.2.3.6	IEEE-384	7.6-64
7.6.2.2.3	Containment Building Exhaust Duct Radiation Monitoring Subsystem	7.6-64
7.6.2.2.3.1	General Functional Requirement Conformance	7.6-64
7.6.2.2.3.2	Conformance to Specific Regulatory Requirements	7.6-65
7.6.2.2.3.3	Conformance to Industry Standards	7.6-65
7.6.2.2.4	Fuel Building Ventilation Exhaust Radiation Monitoring Subsystem	7.6-65
7.6.2.2.4.1	General Functional Requirement Conformance	7.6-65
7.6.2.2.4.2	Conformance to Specific Regulatory Requirements	7.6-65
7.6.2.2.4.3	Conformance to Industry Standards	7.6-65
7.6.2.2.5	Control Room Air Intakes Radiation Monitoring Subsystem	7.6-65
7.6.2.2.5.1	General Functional Requirement Conformance	7.6-65
7.6.2.2.5.2	Conformance to Specific Regulatory Requirements	7.6-66
7.6.2.2.5.3	Conformance to Industry Standards	7.6-66
7.6.2.3	High Pressure/Low Pressure Interlock Protection and Control System	7.6-66
7.6.2.3.1	General Functional Requirements Conformance	7.6-66
7.6.2.3.2	Specific Regulatory Requirements Conformance	7.6-66
7.6.2.3.2.1	General Design Criteria Conformance	7.6-66
7.6.2.3.2.2	IEEE Standards Conformance	7.6-66
7.6.2.3.2.2.1	Conformance to IEEE 279	7.6-66
7.6.2.3.2.2.2	Conformance to IEEE 336	7.6-66
7.6.2.3.2.2.3	Conformance to IEEE 338	7.6-66
7.6.2.3.2.2.4	Conformance to IEEE 379	7.6-66
7.6.2.3.2.3	Regulatory Guide Conformance	7.6-67
7.6.2.4	Leak Detection System (Safety-Related) – Instrumentation and Controls	7.6-67
7.6.2.4.1	General Functional Requirement Conformance	7.6-67
7.6.2.4.2	Specific Regulatory Requirements Conformance	7.6-67
7.6.2.4.2.1	Regulatory Guides Conformance	7.6-67
7.6.2.4.2.2	Regulation Conformance to 10 CFR 50 Appendix A	7.6-68
7.6.2.4.2.3	Industry Standards Conformance	7.6-70
7.6.2.5	Neutron Monitoring System - Instrumentation and Controls	7.6-71
7.6.2.5.1	Source Range Monitor Subsystem	7.6-71
7.6.2.5.2	Intermediate Range Monitor Subsystem	7.6-71
7.6.2.5.2.1	General Functional Requirements Conformance	7.6-71
7.6.2.5.2.2	Specific Regulatory Requirement Conformance	7.6-71
7.6.2.5.2.2.1	Regulatory Guides Conformance	7.6-71
7.6.2.5.2.2.2	Conformance to 10 CFR 50, Appendix A	7.6-72
7.6.2.5.2.2.3	Conformance to Industry Standards	7.6-72

TABLE OF CONTENTS (Cont'd)

		PAGE
7.6.2.5.3	Local Power Range Monitor Subsystem	7.6-73
7.6.2.5.3.1	General Functional Requirement Conformance	7.6-73
7.6.2.5.3.2	Specific Regulatory Requirement Conformance	7.6-73
7.6.2.5.3.2.1	Conformance to General Design Criteria and Regulatory Guides	7.6-73
7.6.2.5.3.2.2	Conformance to Industry Standards	7.6-73
7.6.2.5.4	Average Power Range Monitor Subsystem	7.6-74
7.6.2.5.4.1	General Functional Requirement Conformance	7.6-74
7.6.2.5.4.2	Specific Regulatory Requirement Conformance	7.6-74
7.6.2.5.4.2.1	Regulatory Guides Conformance	7.6-74
7.6.2.5.4.2.2	Conformance to 10 CFR 50, Appendix A	7.6-74
7.6.2.5.4.2.3	Conformance to Industry Standards	7.6-75
7.6.2.5.5	Oscillation Power Range Monitor Subsystem	7.6-75
7.6.2.5.5.1	General Functional Requirement Conformance	7.6-75
7.6.2.5.5.2	Specific Regulatory Requirement Conformance	7.6-76
7.6.2.5.5.2.1	Conformance to Regulatory Guides	7.6-76
7.6.2.5.5.2.2	Conformance to 10 CFR 50, Appendix A	7.6-76
7.6.2.5.5.2.3	Conformance to Industry Standards	7.6-77
7.6.2.5.6	Traversing In-Core Probe Subsystem (TIP)	7.6-77
7.6.2.6	Not Used	7.6-77
7.6.2.7	Rod Pattern Control System	7.6-77
7.6.2.7.1	General Functional Requirement Conformance	7.6-77
7.6.2.7.2	Specific Regulatory Requirement Conformance	7.6-78
7.6.2.7.2.1	Conformance to Regulatory Guides	7.6-78
7.6.2.7.2.2	Conformance to 10 CFR 50, Appendix A	7.6-79
7.6.2.7.2.3	Conformance to Industry Standards	7.6-79
7.6.2.7.3	Special Specific Requirements	7.6-79
7.6.2.7.3.1	Separation and Redundancy	7.6-79
7.6.2.7.3.2	Single Failure	7.6-79
7.6.2.7.3.3	Seismic Capability	7.6-79
7.6.2.7.3.4	Qualification	7.6-79
7.6.2.8	End of Cycle Recirculation Pump Trip (EOC-RPT) System	7.6-79
7.6.2.8.1	General Functional Requirements Conformance	7.6-79
7.6.2.8.2	Specific Regulatory Requirement Conformance	7.6-80
7.6.2.8.2.1	Conformance to Industry Standards	7.6-80
7.6.2.8.2.1.1	IEEE-279	7.6-80
7.6.2.8.2.1.2	IEEE 308 Standard Criteria for Class 1E Electric Systems	7.6-82
7.6.2.8.2.1.3	IEEE 323 - Standard General Guide for Qualifying Class 1 Electric Equipment	7.6-82
7.6.2.8.2.1.4	IEEE 338 - Periodic Testing	7.6-82
7.6.2.8.2.1.5	IEEE 344 - Seismic Qualifications	7.6-83
7.6.2.8.2.1.6	IEEE 379 - Application of the Single-Failure Criterion to Nuclear Power Generating Station Protection Systems	7.6-83
7.6.2.8.2.2	Regulatory Guides Conformance	7.6-83
7.6.2.8.2.3	Conformance to 10 CFR 50 Appendix A - General Design Criteria	7.6-84
7.6.2.9	Fuel Pool Cooling Functional Requirements	7.6-85

TABLE OF CONTENTS (Cont'd)

		PAGE
7.6.2.9.1	Conformance to General Functional Requirements	7.6-85
7.6.2.9.2	Conformance to Specific Regulatory Requirements	7.6-85
7.6.2.9.2.1	Regulatory Guides Conformance	7.6-85
7.6.2.9.2.1.1	Regulatory Guide 1.13	7.6-85
7.6.2.9.2.2	Conformance to 10 CFR 50, Appendix A	7.6-85
7.6.2.9.2.3	Conformance to Industry Standards	7.6-85
7.6.2.9.2.3.1	IEEE 279, Criteria for Protection Systems for Nuclear Power Generating Stations	7.6-85
7.6.2.9.2.3.2	Compliance to IEEE 338	7.6-86
7.6.2.10	Containment Atmosphere Monitoring System – Instrumentation and Controls	7.6-86
7.6.2.10.1	General Functional Requirements Conformance	7.6-86
7.6.2.10.2	Specific Regulatory Requirements Conformance	7.6-86
7.6.2.10.2.1	Regulatory Guides Conformance	7.6-86
7.6.2.10.2.2	Conformance to 10 CFR 50 Appendix A	7.6-87
7.6.2.10.2.3	Industry Standards Conformance	7.6-87
7.6.2.10.2.3.1	IEEE 279	7.6-87
7.6.2.10.2.3.2	IEEE 323	7.6-89
7.6.2.10.2.3.3	IEEE 334	7.6-89
7.6.2.10.2.3.4	IEEE 336	7.6-89
7.6.2.10.2.3.5	IEEE 338	7.6-89
7.6.2.10.2.3.6	IEEE 344	7.6-89
7.6.2.10.2.3.7	IEEE 379	7.6-89
7.6.2.10.2.3.8	IEEE 383	7.6-89
7.6.2.10.2.3.9	IEEE 384	7.6-90
7.6.2.10.2.3.10	IEEE 622	7.6-90
7.6.2.10.2.4	NUREG Conformance	7.6-90
7.6.2.11	Additional Design Considerations Analyses	7.6-90
7.6.2.11.1	General Plant Safety Analyses	7.6-90
7.6.2.11.2	Cold Water Slug Injection	7.6-90
7.6.2.11.3	Refueling Accidents	7.6-90
7.6.2.12	Safety Relief Valve Monitoring (SRVM) System Instrumentation	7.6-90
7.6.2.12.1	Conformance to General Functional Requirements	7.6-90
7.6.2.12.2	Conformance to Specific Regulatory Requirements	7.6-91
7.6.2.12.2.1	Conformance to 10CFR50 Appendix A	7.6-91
7.6.2.12.3	Conformance to Industry Standards	7.6-91
7.6.2.12.3.1	IEEE 279	7.6-91
7.6.2.12.3.2	IEEE 323 - Standard General Guide for Qualifying Class 1 Electrical Equipment	7.6-93
7.6.2.12.3.3	IEEE 344 Seismic Qualifications	7.6-93
7.6.2.12.4	NUREG-0737 Item II.D.3	7.6-93
7.6.2.12.5	NUREG-0737 Item II.B.3 - Post Accident Sampling Capability	7.6-93
7.6.3	References	7.6-94

TABLE OF CONTENTS (Cont'd)

		PAGE
7.7	CONTROL SYSTEMS NOT REQUIRED FOR SAFETY	7.7-1
7.7.1	Description	7.7-1
7.7.1.1	Reactor Vessel - Instrumentation	7.7-2
7.7.1.1.1	System Identification	7.7-2
7.7.1.1.1.1	General	7.7-2
7.7.1.1.1.2	Classification	7.7-2
7.7.1.1.1.3	Reference Design	7.7-2
7.7.1.1.2	Power Sources	7.7-2
7.7.1.1.3	Equipment Design	7.7-2
7.7.1.1.3.1	Circuit Description	7.7-3
7.7.1.1.3.1.1	Reactor Vessel Temperature	7.7-3
7.7.1.1.3.1.2	Reactor Vessel Water Level	7.7-3
7.7.1.1.3.1.3	Reactor Core Hydraulics	7.7-4
7.7.1.1.3.1.4	Reactor Vessel Pressure	7.7-4
7.7.1.1.3.1.5	Reactor Vessel Head Seal Leak Detection	7.7-5
7.7.1.1.3.1.6	Safety/Relief Valve Seat Leak Detection	7.7-5
7.7.1.1.3.1.7	Other Instruments	7.7-5
7.7.1.1.3.2	Testability	7.7-5
7.7.1.1.4	Environmental Considerations	7.7-5
7.7.1.1.5	Operational Considerations	7.7-5
7.7.1.1.5.1	General Information	7.7-5
7.7.1.1.5.2	Reactor Operator Information	7.7-6
7.7.1.1.5.3	Set Points	7.7-6
7.7.1.2	Rod Control and Information System (RCIS) – Instrumentation and Controls	7.7-7
7.7.1.2.1	System Identification	7.7-7
7.7.1.2.1.1	General	7.7-7
7.7.1.2.1.2	Classification	7.7-7
7.7.1.2.1.3	Reference Design	7.7-7
7.7.1.2.2	Power Sources	7.7-8
7.7.1.2.3	Equipment Design	7.7-8
7.7.1.2.3.1	General	7.7-8
7.7.1.2.3.2	Rod Movement Controls	7.7-8
7.7.1.2.3.2.1	Control Rod Drive Control System	7.7-8
7.7.1.2.3.2.1.1	Introduction	7.7-8
7.7.1.2.3.2.1.2	Insert Cycle	7.7-10
7.7.1.2.3.2.1.3	Withdraw Cycle	7.7-10
7.7.1.2.3.2.1.4	Ganged Rod Motion	7.7-11
7.7.1.2.3.2.2	Control Rod Drive-Hydraulic System	7.7-11
7.7.1.2.3.2.3	Rod Block Trip System-Instrumentation and Controls	7.7-11
7.7.1.2.3.2.3.1	Grouping of Channels	7.7-11
7.7.1.2.3.2.3.2	Rod Block Functions	7.7-12
7.7.1.2.3.2.3.3	Rod Block Bypasses	7.7-14
7.7.1.2.3.2.3.4	Rod Block Interlocks	7.7-14
7.7.1.2.3.2.3.5	Redundancy	7.7-14
7.7.1.2.3.2.3.6	Testability	7.7-15

TABLE OF CONTENTS (Cont'd)

		PAGE
7.7.1.2.3.2.3.7	Environmental Considerations	7.7-15
7.7.1.2.3.2.3.8	Operational Considerations	7.7-15
7.7.1.2.3.2.4	Testability	7.7-15
7.7.1.2.3.3	Rod Position Information	7.7-15
7.7.1.2.3.3.1	Position Probes	7.7-15
7.7.1.2.3.3.2	Position Indication Electronics (Two Channels)	7.7-16
7.7.1.2.3.3.3	System Operation (Each Channel)	7.7-16
7.7.1.2.4	Environmental Considerations	7.7-16
7.7.1.2.5	Operational Considerations	7.7-17
7.7.1.2.5.1	General Information	7.7-17
7.7.1.2.5.2	Reactor Operator Information	7.7-17
7.7.1.2.5.3	Set Points	7.7-18
7.7.1.3	Recirculation Flow Control System – Instrumentation and Controls	7.7-18
7.7.1.3.1	System Identification	7.7-18
7.7.1.3.1.1	General	7.7-18
7.7.1.3.1.2	Classification	7.7-19
7.7.1.3.1.3	Reference Design	7.7-19
7.7.1.3.2	Power Sources	7.7-19
7.7.1.3.3	Equipment Design	7.7-19
7.7.1.3.3.1	General	7.7-19
7.7.1.3.3.2	Pump Motor Control	7.7-20
7.7.1.3.3.3	Low-Frequency Motor-Generator (LFMG) Set	7.7-20
7.7.1.3.3.4	Valve Position Control Components	7.7-21
7.7.1.3.3.4.1	Master Controller (Deleted)	7.7-21
7.7.1.3.3.4.2	Flux Demand Limiter (Deleted)	7.7-21
7.7.1.3.3.4.3	Flux Controller (Deleted)	7.7-21
7.7.1.3.3.4.4	Drive Flow Limiter (Deleted)	7.7-21
7.7.1.3.3.4.5	Flux Feedback Isolation Amplifier (Deleted)	7.7-21
7.7.1.3.3.4.6	Manual/Automatic Transfer Stations	7.7-21
7.7.1.3.3.4.7	Flow Controller	7.7-21
7.7.1.3.3.4.8	Limiter	7.7-21
7.7.1.3.3.4.9	Valve Actuator	7.7-22
7.7.1.3.3.5	Testability	7.7-22
7.7.1.3.4	Environmental Considerations	7.7-22
7.7.1.3.5	Operational Considerations	7.7-22
7.7.1.3.5.1	General Information	7.7-22
7.7.1.3.5.2	Reactor Operator Information	7.7-23
7.7.1.3.5.3	Set Points	7.7-23
7.7.1.4	Feedwater Control System - Instrumentation and Controls	7.7-23
7.7.1.4.1	System Identification	7.7-23
7.7.1.4.1.1	General	7.7-23
7.7.1.4.1.2	Classification	7.7-23
7.7.1.4.1.3	Reference Design	7.7-23
7.7.1.4.2	Power Sources	7.7-24
7.7.1.4.3	Equipment Design	7.7-24
7.7.1.4.3.1	General	7.7-24

TABLE OF CONTENTS (Cont'd)

		PAGE
7.7.1.4.3.2	Reactor Vessel Water Level Measurement	7.7-24
7.7.1.4.3.3	Steam Flow Measurement	7.7-25
7.7.1.4.3.4	Feedwater Flow Measurement	7.7-25
7.7.1.4.3.5	Feedwater/Level Control	7.7-25
7.7.1.4.3.5.1	Interlocks	7.7-26
7.7.1.4.3.6	Feedwater Flow Control	7.7-26
7.7.1.4.3.7	Testability	7.7-26
7.7.1.4.4	Environmental Considerations	7.7-26
7.7.1.4.5	Operational Considerations	7.7-26
7.7.1.4.5.1	General Information	7.7-26
7.7.1.4.5.2	Reactor Operator Information	7.7-27
7.7.1.4.5.3	Set Points	7.7-27
7.7.1.5	Pressure Regulator and Turbine-Generator System - Instrumentation and Controls	7.7-27
7.7.1.5.1	System Identification	7.7-27
7.7.1.5.1.1	General	7.7-27
7.7.1.5.1.2	Classification	7.7-28
7.7.1.5.1.3	Reference Design	7.7-28
7.7.1.5.2	Power Sources	7.7-28
7.7.1.5.2.1	Normal	7.7-28
7.7.1.5.2.2	Alternate	7.7-28
7.7.1.5.3	System Design	7.7-28
7.7.1.5.3.1	General	7.7-28
7.7.1.5.3.2	Steam Pressure Control	7.7-28
7.7.1.5.3.3	Steam Bypass System	7.7-29
7.7.1.5.3.4	Turbine Speed-Load Control Systems	7.7-29
7.7.1.5.3.4.1	Turbine Speed/Load Control	7.7-29
7.7.1.5.3.4.2	Behavior of Turbine Outside of Normal Operation	7.7-30
7.7.1.5.3.4.3	Turbine Generator to Reactor Protection System Interface	7.7-30
7.7.1.5.3.4.4	Turbine-Generator to Main Steam Isolation System Interface	7.7-30
7.7.1.5.3.4.4.1	Main Condenser Vacuum Sensors	7.7-30
7.7.1.5.3.5	Testability	7.7-31
7.7.1.5.4	Environmental Considerations	7.7-31
7.7.1.5.5	Operational Considerations	7.7-31
7.7.1.5.5.1	General Information	7.7-31
7.7.1.5.5.2	Reactor Operator Information	7.7-31
7.7.1.5.5.3	Set Points	7.7-32
7.7.1.6	Neutron Monitoring System - Traversing In-core Probe (TIP) Subsystem - Instrumentation and Controls	7.7-32
7.7.1.6.1	System Identification	7.7-32
7.7.1.6.1.1	General	7.7-32
7.7.1.6.1.2	Classification	7.7-32
7.7.1.6.1.3	Reference Design	7.7-32
7.7.1.6.2	Power Sources	7.7-32
7.7.1.6.3	Equipment Design	7.7-33
7.7.1.6.3.1	General	7.7-33
7.7.1.6.3.2	Equipment Arrangement	7.7-33

TABLE OF CONTENTS (Cont'd)

		PAGE
7.7.1.6.3.3	Testability	7.7-33
7.7.1.6.4	Environmental Considerations	7.7-33
7.7.1.6.5	Operational Considerations	7.7-33
7.7.1.7	Performance Monitoring System (PMS)	7.7-34
7.7.1.7.1	System Identification	7.7-34
7.7.1.7.1.1	General	7.7-34
7.7.1.7.1.2	Classification	7.7-34
7.7.1.7.1.3	Reference Design	7.7-34
7.7.1.7.2	Power Sources	7.7-34
7.7.1.7.3	Equipment Design	7.7-34
7.7.1.7.3.1	Circuit Description	7.7-34
7.7.1.7.3.2	Testability	7.7-35
7.7.1.7.4	Environmental Considerations	7.7-35
7.7.1.7.5	Operational Considerations	7.7-36
7.7.1.7.5.1	Nuclear Performance Calculation Programs	7.7-36
7.7.1.7.5.2	Reactor Operator Information (Monitor, Alarm, and Logging Programs)	7.7-37
7.7.1.7.5.3	Performance Calculation Programs	7.7-38
7.7.1.8	Reactor Water Cleanup (RWCU) System – Instrumentation and Controls	7.7-38
7.7.1.8.1	System Identification	7.7-38
7.7.1.8.1.1	General	7.7-38
7.7.1.8.1.2	Classification	7.7-38
7.7.1.8.1.3	Reference Design	7.7-38
7.7.1.8.2	Power Sources	7.7-38
7.7.1.8.3	Equipment Design	7.7-38
7.7.1.8.3.1	General	7.7-38
7.7.1.8.3.2	Circuit Description	7.7-39
7.7.1.8.3.3	Testability	7.7-39
7.7.1.8.4	Environmental Considerations	7.7-39
7.7.1.8.5	Operational Considerations	7.7-39
7.7.1.8.5.1	General Information	7.7-39
7.7.1.8.5.2	Reactor Operator Information	7.7-39
7.7.1.8.5.3	Set Points	7.7-39
7.7.1.9	Area Radiation Monitoring System (ARM) – Instrumentation and Controls	7.7-40
7.7.1.9.1	System Identification	7.7-40
7.7.1.9.1.1	General	7.7-40
7.7.1.9.1.2	Classification	7.7-40
7.7.1.9.1.3	Reference Design	7.7-40
7.7.1.9.2	Power Sources	7.7-40
7.7.1.9.3	Equipment Design	7.7-40
7.7.1.9.3.1	General	7.7-40
7.7.1.9.3.2	Circuit Description	7.7-40
7.7.1.9.3.3	Testability	7.7-41
7.7.1.9.4	Environmental Considerations	7.7-41
7.7.1.9.5	Operational Considerations	7.7-42

TABLE OF CONTENTS (Cont'd)

		PAGE
7.7.1.9.5.1	General Information	7.7-42
7.7.1.9.5.2	Reactor Operator Information	7.7-42
7.7.1.9.5.2.1	General Description of Central Control Terminal	7.7-42
7.7.1.9.5.2.1.1	Terminal Definitions	7.7-42
7.7.1.9.5.2.1.2	AR/PR MCR LAN	7.7-42
7.7.1.9.5.3	Setpoints	7.7-43
7.7.1.10	Gaseous Radwaste Systems - Instrumentation and Controls	7.7-43
7.7.1.10.1	System Identification	7.7-43
7.7.1.10.1.1	General	7.7-43
7.7.1.10.1.2	Classification	7.7-43
7.7.1.10.1.3	Reference Design	7.7-43
7.7.1.10.2	Power Sources	7.7-43
7.7.1.10.3	Equipment Design	7.7-43
7.7.1.10.3.1	General	7.7-43
7.7.1.10.3.2	SJAE Flow Control and Interlocks	7.7-44
7.7.1.10.3.3	Catalytic Recombiner Instrumentation	7.7-44
7.7.1.10.3.4	Cooler Condenser Discharge Temp	7.7-45
7.7.1.10.3.5	Hydrogen Analyzer Measurement System	7.7-45
7.7.1.10.3.6	Moisture or Dew Point Measurement	7.7-45
7.7.1.10.3.7	Charcoal Vessel and Vault Temperature and Flow Monitoring and Control	7.7-45
7.7.1.10.3.8	Differential Pressure Measurements	7.7-46
7.7.1.10.3.9	Offgas System Flow Measurements	7.7-46
7.7.1.10.3.10	Testability	7.7-46
7.7.1.10.4	Environmental Considerations	7.7-46
7.7.1.10.4.1	General	7.7-46
7.7.1.10.4.2	Local Instrument Panels	7.7-46
7.7.1.10.4.3	Hydrogen Analyzer Enclosures	7.7-47
7.7.1.10.4.4	Special Considerations	7.7-47
7.7.1.10.5	Operational Considerations	7.7-47
7.7.1.10.5.1	General Information	7.7-47
7.7.1.10.5.2	Reactor Operator Information	7.7-47
7.7.1.10.6	Alarmed Parameters	7.7-47
7.7.1.11	Liquid Radwaste System Instrumentation and Controls	7.7-47
7.7.1.11.1	System Identification	7.7-47
7.7.1.11.2	Power Sources	7.7-47
7.7.1.11.3	Equipment Design	7.7-48
7.7.1.11.4	Environmental Considerations	7.7-49
7.7.1.11.5	Operational Considerations	7.7-49
7.7.1.12	Solid Radwaste Control System Instrumentation and Controls	7.7-49
7.7.1.12.1	System Identification	7.7-49
7.7.1.12.2	Power Sources	7.7-49
7.7.1.12.3	Equipment Design	7.7-49
7.7.1.12.3.1	Sludge Collection	7.7-50
7.7.1.12.3.2	Sludge Processing	7.7-50
7.7.1.12.3.3	Storage & Handling	7.7-50
7.7.1.12.3.4	Testability	7.7-50

TABLE OF CONTENTS (Cont'd)

		PAGE
7.7.1.12.4	Environmental Considerations	7.7-50
7.7.1.12.5	Operational Considerations	7.7-50
7.7.1.13	Auxiliary Building HVAC System - Instrumentation and Controls	7.7-51
7.7.1.13.1	System Identification	7.7-51
7.7.1.13.2	Power Supply	7.7-51
7.7.1.13.3.1	Initiating Circuits, Logic, and Sequencing	7.7-51
7.7.1.13.3.2	Bypasses and Interlocks	7.7-52
7.7.1.13.3.3	Redundancy/Diversity	7.7-52
7.7.1.13.3.4	Actuated Devices	7.7-52
7.7.1.13.3.5	Separation	7.7-53
7.7.1.13.3.6	Testability	7.7-53
7.7.1.13.3.7	Module Checks	7.7-53
7.7.1.13.3.8	Channel Checks	7.7-53
7.7.1.13.3.9	System Checks	7.7-53
7.7.1.13.4	Environmental Considerations	7.7-53
7.7.1.13.5	Operational Considerations	7.7-53
7.7.1.14	Fuel Building HVAC System - Instrumentation and Controls	7.7-53
7.7.1.14.1	System Identification	7.7-53
7.7.1.14.2	Power Sources	7.7-54
7.7.1.14.3	Equipment Design	7.7-54
7.7.1.14.3.1	Redundancy/Diversity	7.7-54
7.7.1.14.3.2	Indication and Annunciation	7.7-54
7.7.1.14.3.2.1	Indication on Local Control Panel	7.7-54
7.7.1.14.3.2.2	Annunciation on Local Control Panel	7.7-54
7.7.1.14.3.3	Initiating Circuits, Logic and Sequencing	7.7-55
7.7.1.14.3.4	Bypasses and Interlocks	7.7-55
7.7.1.14.3.5	Actuated Devices	7.7-56
7.7.1.14.4	Environmental Consideration	7.7-56
7.7.1.14.5	Operational Consideration	7.7-56
7.7.1.15	Drywell Cooling and Supplement Drywell Cooling System Instrumentation and Controls	7.7-56
7.7.1.15.1	System Identification	7.7-56
7.7.1.15.2	Power Sources	7.7-57
7.7.1.15.3	Equipment Design	7.7-57
7.7.1.15.3.1	Redundancy/Diversity	7.7-57
7.7.1.15.3.2	Indication and Annunciation	7.7-57
7.7.1.15.3.2.1	Indication	7.7-57
7.7.1.15.3.2.2	Annunciation on Main Control Board	7.7-58
7.7.1.15.3.3	Initiating Circuits, Logic and Sequencing	7.7-58
7.7.1.15.3.4	Bypass and Interlocks	7.7-59
7.7.1.15.3.5	Actuated Devices	7.7-59
7.7.1.15.4	Environmental Considerations	7.7-59
7.7.1.15.5	Operational Considerations	7.7-59
7.7.1.16	Drywell Purge System Instrumentation and Controls	7.7-60
7.7.1.16.1	System Identification	7.7-60
7.7.1.16.2	Power Sources	7.7-60
7.7.1.16.3	Equipment Design	7.7-60

TABLE OF CONTENTS (Cont'd)

		PAGE
7.7.1.16.3.1	System Description	7.7-60
7.7.1.16.3.2	Indication and Annunciation	7.7-61
7.7.1.16.3.2.1	Indication on Main Control Benchboard	7.7-61
7.7.1.16.3.2.2	Annunciation on Main Control Benchboard	7.7-62
7.7.1.16.3.3	Initiating Circuits, Logic and Sequencing	7.7-62
7.7.1.16.3.3.1	Start and Stop	7.7-62
7.7.1.16.3.4	Bypasses and Interlocks	7.7-63
7.7.1.16.3.4.1	Bypasses	7.7-63
7.7.1.16.3.4.2	Interlocks	7.7-63
7.7.1.16.3.5	Actuated Devices	7.7-66
7.7.1.16.4	Environmental Considerations	7.7-66
7.7.1.16.5	Operational Considerations	7.7-66
7.7.1.17	Containment Building HVAC Instrumentation and Controls	7.7-67
7.7.1.17.1	System Identification	7.7-67
7.7.1.17.2	Power Sources	7.7-67
7.7.1.17.3	Equipment Design	7.7-68
7.7.1.17.3.1	Indication and Annunciation	7.7-68
7.7.1.17.3.1.1	Indication	7.7-68
7.7.1.17.3.1.2	Annunciation on Local Control Board	7.7-68
7.7.1.17.3.2	Initiating Circuits, Logic and Sequencing	7.7-68
7.7.1.17.3.3	Bypasses and Interlocks	7.7-70
7.7.1.17.3.4	Actuated Devices	7.7-71
7.7.1.17.4	Environmental Consideration	7.7-71
7.7.1.17.5	Operational Consideration	7.7-72
7.7.1.18	Radwaste Building HVAC Instrumentation and Controls	7.7-72
7.7.1.18.1	System Identification	7.7-72
7.7.1.18.2	Power Sources	7.7-73
7.7.1.18.3	Equipment Design	7.7-73
7.7.1.18.3.1	Redundancy/Diversity	7.7-73
7.7.1.18.3.2	Indication and Annunciation	7.7-73
7.7.1.18.3.2.1	Indication on Local Control Panel	7.7-73
7.7.1.18.3.2.2	Annunciation on Local Control Panel	7.7-73
7.7.1.18.3.3	Initiating Circuits, Logic and Sequencing	7.7-74
7.7.1.18.3.4	Bypasses and Interlocks	7.7-75
7.7.1.18.3.5	Actuated Devices	7.7-75
7.7.1.18.4	Environmental Consideration	7.7-75
7.7.1.18.5	Operational Considerations	7.7-75
7.7.1.19	Process Radiation Monitoring System – Instrumentation and Controls	7.7-76
7.7.1.19.1	System Identification	7.7-76
7.7.1.19.1.1	General	7.7-76
7.7.1.19.1.2	Classification	7.7-77
7.7.1.19.1.3	Reference Design	7.7-77
7.7.1.19.2	Power Sources	7.7-77
7.7.1.19.3	Equipment Design	7.7-77
7.7.1.19.4	Circuit Description	7.7-77
7.7.1.19.5	Testability	7.7-79

TABLE OF CONTENTS (Cont'd)

		PAGE
7.7.1.19.6	Environmental Consideration	7.7-79
7.7.1.19.7	Operational Considerations	7.7-79
7.7.1.19.7.1	General Information	7.7-79
7.7.1.19.7.2	Reactor Operator Information	7.7-80
7.7.1.19.7.3	Set Points	7.7-80
7.7.1.19.8	Actuated Devices	7.7-80
7.7.1.20	Fire Protection and Suppression System	7.7-80
7.7.1.20.1	System Identification	7.7-80
7.7.1.20.1.1	General	7.7-80
7.7.1.20.1.2	Classification	7.7-80
7.7.1.20.2	Power Sources	7.7-80
7.7.1.20.3	Equipment Design	7.7-80
7.7.1.20.3.1	General	7.7-80
7.7.1.20.3.2	Equipment Arrangement	7.7-81
7.7.1.20.4	Environmental Considerations	7.7-81
7.7.1.20.5	Operational Considerations	7.7-81
7.7.1.20.5.1	General	7.7-81
7.7.1.20.5.2	Reactor Operator Information	7.7-81
7.7.1.20.6	Setpoints	7.7-81
7.7.1.21	Display Control System (DCS)	7.7-81
7.7.1.21.1	General	7.7-81
7.7.1.21.2	Hardware Configuration	7.7-82
7.7.1.21.3	Selection of Displays	7.7-82
7.7.1.22	Source Range Monitor (SRM) Subsystem	7.7-83
7.7.1.22.1	Equipment Design	7.7-83
7.7.1.22.1.1	Circuit Description	7.7-83
7.7.1.22.1.2	Bypasses and Interlocks	7.7-85
7.7.1.22.1.3	Redundancy and Diversity	7.7-85
7.7.1.22.1.4	Testibility	7.7-85
7.7.1.22.1.5	Environmental Considerations	7.7-85
7.7.1.22.1.6	Operational Considerations	7.7-85
7.7.1.23	Main Control Room Annunciator	7.7-85
7.7.1.23.1	System Identification	7.7-85
7.7.1.23.2	Power Sources	7.7-86
7.7.1.23.3	Classification	7.7-86
7.7.1.23.4	Equipment Design	7.7-86
7.7.1.23.4.1	General	7.7-86
7.7.1.23.4.2	Components	7.7-87
7.7.1.23.4.2.1	Flasher	7.7-87
7.7.1.23.4.2.2	Pushbuttons	7.7-87
7.7.1.23.4.2.3	Alarm Annunciator Window	7.7-87
7.7.1.23.4.2.4	Audible Alarm	7.7-87
7.7.1.23.5	Operation	7.7-87
7.7.1.23.5.1	Definition of Annunciator States	7.7-87
7.7.1.24	Leak Detection System - Instrumentation and Controls	7.7-88
7.7.1.24.1	General	7.7-88
7.7.1.24.2	Classification	7.7-88

TABLE OF CONTENTS (Cont'd)

		PAGE
7.7.1.24.3	Reference Design	7.7-88
7.7.1.24.4	Power Sources	7.7-88
7.7.1.24.5	Recirculation Pump Leak Detection	7.7-89
7.7.1.24.5.1	Subsystem Identification	7.7-89
7.7.1.24.5.2	Pump Seal Cavity Pressure Monitoring	7.7-89
7.7.1.24.5.2.1	Equipment Design	7.7-89
7.7.1.24.5.3	Liquid Flow Rate Monitoring	7.7-89
7.7.1.24.5.3.1	Equipment Design	7.7-89
7.7.1.24.5.3.2	Operational Considerations	7.7-90
7.7.1.24.6	ECCS Leak Detection	7.7-90
7.7.1.24.6.1	RHR Injection Lines Break Detection Monitoring	7.7-90
7.7.1.24.6.1.1	Circuit Description	7.7-90
7.7.1.24.6.2	LPCS and HPCS Leak Detection Monitoring	7.7-90
7.7.1.24.6.2.1	Circuit Description	7.7-90
7.7.1.24.6.2.2	Logic and Sequencing	7.7-90
7.7.1.24.6.3	ECCS Cubicle Floor Drain Sump Monitoring	7.7-90
7.7.1.24.6.3.1	Circuit Description	7.7-90
7.7.1.24.6.3.2	Logic and Sequencing	7.7-91
7.7.1.24.6.3.3	Bypasses and Interlocks	7.7-91
7.7.1.24.6.3.4	Redundancy and Diversity	7.7-91
7.7.1.24.7	Main Steam Line Guard Pipe Monitor	7.7-91
7.7.1.24.7.1	Circuit Description	7.7-91
7.7.1.24.7.2	Logic and Sequencing	7.7-91
7.7.1.24.8	Safety/Relief Valve Leak Detection	7.7-91
7.7.1.24.9	Reactor Vessel Head Leak Detection	7.7-91
7.7.1.24.10	Drywell/Containment Leak Detection	7.7-91
7.7.1.24.10.1	Subsystem Identification	7.7-91
7.7.1.24.10.1.1	Drywell Sump Monitor	7.7-92
7.7.1.24.10.1.2	Containment Sump Monitor	7.7-94
7.7.1.24.10.1.3	Sump Discharges Flow Totalizers	7.7-94
7.7.1.24.10.1.4	Drywell Fission Product Monitoring	7.7-95
7.7.1.24.10.1.5	Drywell Air Cooler Monitors	7.7-95
7.7.1.24.10.1.6	Fuel Pool Liner and Refueling Bellows Leak Detection	7.7-95
7.7.1.24.10.1.7	Valve Steam Packing Leaking Detection	7.7-95
7.7.1.24.10.1.8	Drywell Ambient Temperature Monitoring	7.7-96
7.7.1.24.10.2	Operational Considerations	7.7-96
7.7.1.25	Anticipated Transient Without Scram	7.7-96
7.7.1.25.1	Alternate Rod Insertion	7.7-96
7.7.1.25.2	Recirculation Pump Trip	7.7-97
7.7.1.26	Safety Parameter Display System (SPDS)	7.7-98
7.7.1.26.1	System Identification	7.7-98
7.7.1.26.1.1	General	7.7-98
7.7.1.26.1.2	Classification	7.7-98
7.7.1.26.2	Power Sources	7.7-99
7.7.1.26.3	Equipment Design Approach	7.7-99
7.7.1.26.3.1	SPDS Critical Safety Function (CSF)	7.7-99
7.7.1.26.3.2	Displays	7.7-99

TABLE OF CONTENTS (Cont'd)

		PAGE
7.7.1.26.3.3	Response Time	7.7-99
7.7.1.26.3.4	Safety Classification	7.7-100
7.7.1.26.3.5	Reliability and Availability	7.7-100
7.7.1.26.3.6	SPDS Hardware	7.7-100
7.7.1.26.4	Testability	7.7-102
7.7.1.26.5	Environmental Considerations	7.7-102
7.7.1.27	Buffer System	7.7-102
7.7.1.27.1	System Identification	7.7-102
7.7.1.27.1.1	General	7.7-102
7.7.1.27.1.2	Classification	7.7-102
7.7.1.27.1.3	Reference Design	7.7-102
7.7.1.27.2	Power Source	7.7-102
7.7.1.27.3	Equipment Design	7.7-103
7.7.1.27.3.1	General	7.7-103
7.7.1.27.3.2	Receipt of Data	7.7-103
7.7.1.27.3.3	Storage of Data	7.7-103
7.7.1.27.3.4	Access to Data	7.7-103
7.7.1.27.3.5	Testability	7.7-103
7.7.1.27.4	Environmental Considerations	7.7-103
7.7.1.27.5	Operational Considerations	7.7-103
7.7.1.27.5.1	General Information	7.7-103
7.7.1.27.5.2	Reactor Operator Information	7.7-104
7.7.1.27.5.3	Setpoints	7.7-104
7.7.2	Analysis	7.7-104
7.7.2.1	Reactor Vessel - Instrumentation	7.7-104
7.7.2.1.1	General Functional Requirements Conformance	7.7-104
7.7.2.1.2	Specific Regulatory Requirements Conformance	7.7-105
7.7.2.2	Rod Control and Information Systems (RCIS) – Instrumentation and Controls	7.7-105
7.7.2.2.1	General Functional Requirements Conformance	7.7-105
7.7.2.2.2	Specific Regulatory Requirements	7.7-106
7.7.2.2.3	Rod Block Trip-Instrumentation and Controls	7.7-107
7.7.2.2.3.1	General Functional Requirement Conformance	7.7-107
7.7.2.2.3.2	Specific Regulatory Requirement Conformance	7.7-107
7.7.2.3	Recirculation Flow Control System – Instrumentation and Controls	7.7-107
7.7.2.3.1	General Functional Requirements Conformance	7.7-107
7.7.2.3.2	Specific Regulatory Requirements	7.7-108
7.7.2.4	Feedwater Control System - Instrumentation and Controls	7.7-109
7.7.2.4.1	General Functional Requirements Conformance	7.7-109
7.7.2.4.2	Specific Regulatory Requirements Conformance	7.7-109
7.7.2.5	Pressure Regulator and Turbine-Generator System Instrumentation and Controls	7.7-109
7.7.2.5.1	General Functional Requirements Conformance	7.7-109
7.7.2.5.2	Specific Regulatory Requirements Conformance	7.7-110
7.7.2.6	Neutron Monitoring System Traversing In-Core Probe Subsystem (TIP) - Instrumentation and Controls	7.7-110

TABLE OF CONTENTS (Cont'd)

		PAGE
7.7.2.6.1	General Functional Requirement Conformance	7.7-110
7.7.2.6.2	Specific Regulatory Requirement Conformance	7.7-111
7.7.2.7	Performance Monitoring System (PMS) - Instrumentation	7.7-111
7.7.2.7.1	General Functional Requirements	7.7-111
7.7.2.7.2	Regulatory Requirements Conformance	7.7-111
7.7.2.8	Reactor Water Cleanup System - Instrumentation and Controls	7.7-111
7.7.2.8.1	General Functional Requirement Conformance	7.7-111
7.7.2.8.2	Specific Regulatory Requirements Conformance	7.7-111
7.7.2.9	Area Radiation Monitoring System (ARMS) – Instrumentation and Controls	7.7-112
7.7.2.9.1	General Functional Requirements Conformance	7.7-112
7.7.2.9.2	Conformance to 10 CFR 50, Appendix A	7.7-112
7.7.2.10	Gaseous Radwaste System - Instrumentation and Controls	7.7-112
7.7.2.10.1	General Functional Requirements Conformance	7.7-112
7.7.2.10.2	Specific Regulatory Requirements Conformance	7.7-112
7.7.2.11	Liquid Radwaste System - Instrumentation and Controls	7.2-113
7.7.2.11.1	General Functional Requirements Conformance	7.7-113
7.7.2.11.2	Specific Regulatory Requirements Conformance	7.7-113
7.7.2.11.2.1	Regulatory Guide 1.21	7.7-113
7.7.2.11.2.2	Regulatory Guide 1.143	7.7-113
7.7.2.11.2.3	Conformance to 10 CFR 50, Appendix A	7.7-114
7.7.2.12	Solid Radwaste Control System Instrumentation and Controls	7.7-114
7.7.2.12.1	General Functional Requirements Conformance	7.7-114
7.7.2.12.2	Specific Regulatory Requirements Conformance	7.7-114
7.7.2.12.2.1	Regulatory Guide 1.21	7.7-114
7.7.2.12.2.2	Regulatory Guide 1.143	7.7-114
7.7.2.12.2.3	Conformance to 10 CFR 50, Appendix A	7.7-114
7.7.2.13	Auxiliary Building HVAC System Instrumentation and Controls	7.7-115
7.7.2.13.1	Conformance to General Functional Requirements	7.7-115
7.7.2.14	Fuel Building HVAC System Instrumentation and Controls	7.7-115
7.7.2.14.1	Analysis	7.7-115
7.7.2.15	Drywell Cooling System Instrumentation and Controls	7.7-115
7.7.2.15.1	General Functional Requirements Conformance	7.7-115
7.7.2.15.2	Specific Regulatory Requirements Conformance	7.7-115
7.7.2.16	Drywell Purge System Instrumentation and Controls	7.7-115
7.7.2.16.1	General Functional Requirements Conformance	7.7-115
7.7.2.16.2	Specific Regulatory Requirements Conformance	7.7-116
7.7.2.17	Containment Building HVAC Instrumentation	7.7-116
7.7.2.17.1	General Functional Requirements Conformance	7.7-116
7.7.2.17.2	Specific Regulatory Requirements Conformance	7.7-116
7.7.2.18	Radwaste Building HVAC Instrumentation and Controls	7.7-116
7.7.2.18.1	General Functional Requirements Conformance	7.7-116
7.7.2.18.2	Specific Regulatory Requirements Conformance	7.7-117
7.7.2.19	Process Radiation Monitoring System - Instrumentation and Controls	7.7-117
7.7.2.19.1	General Functional Conformance	7.7-117
7.7.2.19.2	Conformance to Specific Regulatory Requirements	7.7-118

TABLE OF CONTENTS (Cont'd)

		PAGE
7.7.2.19.2.1	Regulatory Guides Conformance	7.7-118
7.7.2.19.2.1.1	Regulatory Guide 1.21	7.7-118
7.7.2.19.2.2	Conformance to 10 CFR 50, Appendix A	7.7-118
7.7.2.20	Fire Protection and Suppression System	7.7-118
7.7.2.20.1	General Functional Requirement Conformance	7.7-118
7.7.2.20.2	Specific Regulatory Requirement Conformance	7.7-118
7.7.2.21	Computer Systems	7.7-118
7.7.2.22	Neutron Monitoring System - Instrumentation and Controls	7.7-119
7.7.2.22.1	Source Range Monitor Subsystem	7.7-119
7.7.2.22.1.1	General Functional Requirement Conformance	7.7-119
7.7.2.22.1.2	Specific Regulatory Requirements Conformance	7.7-119
7.7.2.23	Main Control Room Annunciator	7.7-119
7.7.2.23.1	General Functional Requirements Conformance	7.7-119
7.7.2.23.2	Specific Regulatory Requirements Conformance	7.7-119
7.7.2.24	Leak Detection System (LDS) - Non-Safety Related Instrumentation and Controls	7.7-120
7.7.2.24.1	General Functional Requirements Conformance	7.7-120
7.7.2.24.2	Specific Regulatory Requirements Conformance	7.7-120
7.7.2.25	Anticipated Transient Without Scram (ATWS)	7.7-120
7.7.2.25.1	General Functional Requirements Conformance	7.7-120
7.7.2.25.2	Specific Regulatory Requirements Conformance	7.7-121
7.7.2.26	Safety Parameter Display System	7.7-121
7.7.2.26.1	General Functional Requirements Conformance	7.7-121
7.7.2.26.2	Specific Regulatory Requirements Conformance	7.7-121
7.7.3	References	7.7-121

CHAPTER 7 INSTRUMENTATION AND CONTROL SYSTEMS

LIST OF TABLES

NUMBER	TITLE	PAGE
7.1-1	System Identification and Responsibility	7.1-61
7.1-2	Similarity to Licensed Reactors	7.1-64
7.1-3	Codes and Standards Applicability Matrix	7.1-69
7.1-4 thru 7.1-9	Deleted	7.1-77
7.1-10	Divisional Identification of Systems and Subsystems	7.1-78
7.1-11	Four Division Grouping of the Neutron Monitoring System Utilizing Four Containment Penetrations	7.1-80
7.1-12	Emergency Core Cooling System, Core Standby Cooling and RCIC Sensor Suffix Letters and Division Allocation Energize-to-Operate	7.1-81
7.1-13	Summary Information for Compliance with Regulatory Guide 1.97	7.1-82
7.1-14	4Summary Information for Emergency Procedure Guideline Instrumentation	7.1-105
7.1-15	Regulatory Guide 1.47 Bypasses and Inoperative Indication	7.1-107
7.3-1 thru 7.3-6	Deleted	7.3-184
7.3-7	Instrument Channel Required For Containment and Reactor Vessel Isolation Control System	7.3-186
7.3-8	Trip Channels Required for Functional Performance of HPCS System	7.3-188
7.3-9	Trip Channels Required for Functional Performance of Automatic Depressurization System	7.3-189
7.3-10	Trip Channels Required for Functional Performance of LPCI "B" and "C"	7.3-190
7.3-11	Trip Channels Required for Functional Performance of the LPCS System and LPCI "A"	7.3-191
7.4-1	Deleted	7.4-41
7.4-2	Reactor Shutdown Cooling Bypasses and Interlocks	7.4-42
7.5-1	Control Room Safety Related Display Instrumentation	7.5-29
7.5-2	Deleted	7.5-34
7.6-1	Refueling Interlock Effectiveness	7.6-95
7.6-2	Process Radiation Monitoring Systems – Instrument Characteristics	7.6-96
7.6-3	Deleted	7.6-97
7.6-4	IRM Trips	7.6-98
7.6-5	LPRM System Trips	7.6-99
7.6-6	APRM System Trips	7.6-100
7.7-1	CRD Hydraulic System Process Indicators	7.7-122
7.7-2	SRM System Trips	7.7-123
7.7-3	Annunciator Logic Sequence	7.7-124

CHAPTER 7 INSTRUMENTATION AND CONTROL SYSTEM

LIST OF FIGURES

NUMBER	TITLE
7.1-1	Deleted
7.1-2	Deleted
7.1-3	ECCS Separation Concept
7.1-4	NSSS Separation Concept
7.1-5	Main Steamline Isolation Separation Concept
7.1-6	RCIC Sensor Separation Scheme
7.1-7	Analog Trip Module (4-20 mA) Simplified Diagram
7.1-8	Non-NSPS Master Trip Unit Functional Block Diagram
7.1-9	Non-NSPS Slave Trip Unit Functional Block Diagram
7.1-10	Non-NSPS Calibration Unit Functional Block Diagram
7.2-1	Deleted
7.2-2	Reactor Protection System Scram Functions
7.2-3	RPS Arrangement of Channels and Logic
7.2-4	Relationship Between Neutron Monitoring System and Reactor Protection System
7.2-5	Typical Arrangement of Analog Channels and Logics
7.2-6	Typical Arrangement of Digital Channels and Logics
7.2-7	Typical Configuration for Turbine Stop Valve Closure Reactor Trip Coincident Logic
7.2-8	Typical Configuration for MSIV Closure Reactor Trip Coincident Logic
7.2-9	NSPS Power Supply Scheme
7.2-10	RPS and NSSS (MSIV) Control Power Supply Scheme
7.3-1	Deleted
7.3-2	Typical Isolation Control System for Main Steamline Isolation Valves
7.3-3	Typical Isolation Control System Using Motor-Operated Valves
7.3-4	Main Steam Line Isolation Valve (Schematic)
7.3-5	Deleted
7.3-6	Deleted
7.3-7	Initiation Logic - ADS, LPCS, RHR A
7.3-8	Initiation Logic - RHR B and C, HPCS, RCIC
7.3-9	Emergency Core Cooling System (ECCS) Separation Scheme
7.4-1 thru 7.4-4	Deleted
7.5-1	Control Room Panels with Solid-State Safety Systems
7.5-2	Outline – Principle Plant Control Console
7.5-3	Deleted
7.5-4	Deleted
7.5-5	Deleted
7.5-6	Outline of Balance of Plant Benchboards
7.5-7 thru 7.5-9	Deleted
7.5-10	Outline of Diesel Generator Benchboard

LIST OF FIGURES (Cont'd)

NUMBER	TITLE
7.6-1 thru 7.6-9	Deleted
7.6-10	SRM/IRM Neutron Monitoring Unit
7.6-11	Detector Drive System Schematic
7.6-12	Deleted
7.6-13	Deleted
7.6-14	Deleted
7.6-15	Functional Block Diagram of IRM Channel
7.6-16	Deleted
7.6-17	Power Range Monitor Detector Assembly Location
7.6-18	Deleted
7.6-19	Deleted
7.6-20	APRM Block Diagram (Typical of Four Channels)
7.6-21	Deleted
7.6-22	Ranges of Neutron Monitoring System
7.7-1	Water Level Range Definition
7.7-2	Source and Detector Locations
7.7-3	Deleted
7.7-4	Deleted
7.7-5	Rod Control and Information System Operation
7.7-5a	RC&IS Self-Test Provisions
7.7-6	Dual Eleven-Wire Position Probe
7.7-7	Deleted
7.7-7a	Deleted
7.7-7b	Recirculation Flow Control Illustrations
7.7-8	Deleted
7.7-9	Deleted
7.7-10	Simplified Diagram, Turbine Pressure Control Requirements
7.7-11	Deleted
7.7-12	Deleted
7.7-13	Deleted
7.7-14	Deleted
7.7-15	Functional Block Diagram of SRM Channel
7.7-16	Reactor Recirculation Pump Leak Detection Block Diagram

DRAWINGS CITED IN THIS CHAPTER*

*The listed drawings are included as "General References" only; i.e., refer to the drawings to obtain additional detail or to obtain background information. These drawings are not part of the USAR. They are controlled by the Controlled Documents Program.

DRAWING*	SUBJECT
204B7284	Traversing In-Core Probe Assembly
762E298AC	High Pressure Core Spray System Power Supply
793E945	Reactor Core Cooling Benchboard
796E724	Nuclear Boiler System
828E320	System Assignments on Principal Plant Console
866E441	Standby Information Panel
E02-1FW99	Schematic Diagram - Feedwater System
E02-1HP99	Schematic Diagram - High Pressure Core Spray System
E02-1IS99	Schematic Diagram - Main Steam Isolation Valve Leakage Control System
E02-1LP99	Schematic Diagram - Low Pressure Core Spray System
E02-1NB99	Schematic Diagram - Nuclear Boiler System
E02-1NR99	Schematic Diagram - Neutron Monitoring System
E02-1PR99	Schematic Diagram - Process Radiation Monitoring System
E02-1RD99	Schematic Diagram - Control Rod Drive Hydraulic System
E02-1RH99	Schematic Diagram - Reactor Heat Removal System
E02-1RI99	Schematic Diagram - Reactor Core Isolation System
E02-1RP99	Schematic Diagram - Reactor Protection System
E02-1RR99	Schematic Diagram - Reactor Recirculation System
E02-1RT99	Schematic Diagram - Reactor Water Cleanup System
E02-1SC99	Schematic Diagram - Standby Liquid Control System
M05-1034	Containment Monitoring System
M05-1063	Combustible Gas Control System
M05-1070	Main Steam Isolation Valve - Leakage Control System
M05-1073	Low Pressure Core Spray System
M05-1074	High Pressure Core Spray System
M05-1075	Residual Heat Removal System
M05-1076	Reactor Water Cleanup System
M05-1078	Control Rod Drive System
M05-1079	Reactor Core Isolation Cooling System
M05-1084	Off-Gas System
M05-1102	Control Room HVAC

7.0 INSTRUMENTATION AND CONTROL SYSTEMS

7.1 INTRODUCTION

This chapter presents the specific detailed design and performance information relative to the instrumentation and control aspects of the safety-related and power generation (non-safety related) systems utilized throughout the plant. The design and performance considerations relative to these systems' safety function, and their mechanical aspects are described elsewhere in the document. See Section 1.7 for elementaries and Subsection 1.2.2.2 for general equipment arrangement.

7.1.1 Identification of Safety-Related Systems

7.1.1.1 General

Instrumentation and control (I&C) systems supplied are designated as either power generation systems or safety systems, depending on their function. Some portions of a system may have a safety function while other portions of the same system may be classified as power generation. A description of the system of classification can be found in Appendix 15A, "Plant Nuclear Safety Operational Analysis" of Chapter 15 "Accident Analyses".

The systems presented in Chapter 7.0 are classified according to the NRC Regulatory Guide 1.70, namely, Reactor Protection (Trip) System (RPS), Engineered Safety Feature Systems, Auxiliary Supporting Systems, Safe Shutdown Systems, Safety-Related Display Instrumentation, Other Instrumentation and Control Systems Required for Safety, and Instrumentation and Control Systems Not Required for Safety. Table 7.1-1 lists the systems under each of these classifications and identifies the designer and/or supplier. Table 7.1-2 identifies instrumentation and control systems that are identical to those of a nuclear power plant of similar design that has recently received NRC design or operation approval through the issuance of either a construction permit or an operating license. Differences and their effect on safety-related systems are also identified in Table 7.1-2.

7.1.1.2 Identification of Individual Systems

A brief descriptive statement is given relative to each significant BWR I&C System.

(1) Reactor Protection (Trip) System (RPS) - Instrumentation and Controls initiate an automatic reactor shutdown via insertion of control rods (scram) if monitored system variables exceed pre-established limits. This action prevents fuel damage, limits system pressure, and thus restricts the release of radioactive material.

(2) Containment and Reactor Vessel Isolation Control System (CRVICS) - Instrumentation and Controls initiate closure of various automatic isolation valves if monitored system variables exceed pre-established limits. This action limits the loss of coolant from the reactor coolant pressure boundary and the release of radioactive materials from either the reactor coolant pressure boundary or the primary containment.

(3) Emergency Core Cooling Systems (ECCS) - Instrumentation and Controls provide initiation and control of specific core cooling systems such as High

Pressure Core Spray System, Automatic Depressurization System, Low Pressure Core Spray System, and the Low Pressure Coolant Injection mode of the Residual Heat Removal System provided to cool the fuel cladding following a design basis accident.

(4) Neutron Monitoring System (NMS) - Instrumentation and Controls use incore neutron detectors to monitor core neutron flux. The Neutron Monitoring System provides logic signals to the RPS to shut down the reactor when a condition necessitating a reactor scram is detected. Average neutron flux or average simulated thermal power is used as the overpower indicator during power operation. Intermediate range detectors are used as overpower indicators during startup and shutdown. The Neutron Monitoring System also provides power level indication during planned operation. Source range detectors are used to provide neutron flux information during reactor startup and low flux level operations. The Traversing Incore Probe subsystem monitors axial neutron flux to calibrate the LPRMS. The Oscillation Power Range Monitor subsystem is used monitor for the onset of thermal hydraulic oscillations.

The neutron monitoring system consists of five major subsystems;

a. Source Range Monitor (SRM) Subsystem

b. Intermediate Range Monitor (IRM) Subsystem

c. Local Power Range Monitor (LPRM) Subsystem

d. Average Power Range Monitor (APRM) Subsystem

e. Traversing Incore Probe (TIP) Subsystem

f. Oscillation Power Range Monitor (OPRM) Subsystem

(5) Refueling Interlocks - Instrumentation and Controls serve as a backup to procedural core reactivity control during refueling operation.

(6) Rod Control and Information System (RC&IS) - Instrumentation and Controls allow the operator to manipulate control rods and determine their positions. Interlocks are provided in the control circuitry to prevent operator errors or equipment malfunctions from initiating the action of the reactor protection system.

(7) Reactor Vessel - Instrumentation monitors and transmits information concerning key reactor vessel operating variables.

(8) Recirculation Flow Control System - Instrumentation and Controls regulate the reactor recirculation pumps and valve position to vary the coolant flow rate through the core. The system permits manual or automatic control.

(9) Feedwater Control System - Instrumentation and Controls regulate the feedwater system flow rate so that proper reactor vessel water level is maintained. The system is arranged to permit single-element (reactor vessel water level only), three-element (level, main steam flow, feedwater flow), or manual operation.

(10) Pressure Regulator and Turbine-Generator System - Instrumentation and Controls. The turbine pressure regulator normally controls the turbine control valves to maintain constant (within the range of the regulator controller proportional band setting) turbine inlet pressure. In addition, the pressure regulator also operates the steam bypass valves such that a portion of nuclear boiler rated flow can be bypassed when operating at steam flow loads above that which can be accepted by the turbine as well as during the startup and shutdown phase.

(11) Process Radiation Monitoring System - Instrumentation and Controls - A number of radiation monitors and monitoring subsystems are provided. These include the following:

a. Main Steam Line Radiation Monitoring System

b. Containment Building Fuel Transfer Ventilation Plenum Radiation Monitoring System

c. Containment Building Exhaust Duct Radiation Monitoring System

d. Fuel Building Ventilation Exhaust Duct Radiation Monitoring System

e. Control Room Air Intake Radiation Monitoring System

f. Standby Gas Treatment System Exhaust Radiation Monitoring System

g. Common Station Vent Radiation monitoring System

h. Plant Service Water Effluent Radiation Monitoring System

i. Shutdown Service Water Effluent Radiation Monitoring System

j. Liquid Radwaste Discharge Radiation Monitoring System

k. Post Treatment Air Ejector Off-Gas Radiation Monitoring System

l. Pre-treatment Air Ejector Off-Gas Radiation Monitoring System

m. Component Cooling Water Radiation Monitoring System

n. Fuel Pool Heat Exchanger Service Water Radiation Monitoring System

o. Continuous Containment Purge Radiation Monitoring System

(12) Area Radiation Monitoring System (ARM) indicates and records gamma radiation levels in areas where radioactive material may be present, stored, handled, or inadvertently introduced. The ARM is described in Section 12.3.4 and fixed ARM's are listed in Table 12.3-2. This system is not safety related.

(13) Performance Monitoring System (PMS) provides alarm and data logging and NSSS and BOP performance calculations.

(14) The Standby Gas Treatment System (SGTS) instrumentation and controls initiate operation of both standby gas treatment trains upon receiving one of the following signals; high drywell pressure, low reactor water level, or high radiation in either the containment building or fuel building main exhaust or containment building refueling pool exhaust, or the Continuous Containment Purge System. Once initiation has taken place, the instrumentation and control system regulates flow, provides information to the operator, and enables manual control as required.

(15) The Main Control Room HVAC instrumentation and control system senses abnormal radiation levels in the main control room outside air intake, and actuates an alarm in the Main Control Room to alert station operators. For abnormal radiation levels, automatic rerouting of circulating air is also initiated. It also senses abnormal ambient conditions in the control room and initiates the appropriate control action.

(16) The Shutdown Service Water System (SSWS) instrumentation and controls regulate the operation of the system to provide a reliable source of cooling water for station auxiliaries which are essential to safe shutdown of the reactor following the unlikely event of a loss-of-coolant-accident (LOCA).

(17) The Combustible Gas Control System (CGCS) consists of two major safety related subsystems, the drywell containment mixing system and the hydrogen recombiner system.

(18) The Reactor Core Isolation Cooling (RCIC) System instrumentation and controls provide for automatic or manual core cooling in the event the reactor becomes isolated from its normal heat sink (the main condenser) during plant operation by a closure of the main steam line isolation valves, and normal coolant flow from the feedwater system is unavailable.

(19) The Standby Liquid Control System (SLCS) instrumentation and controls provide manual initiation of a redundant reactivity control system which can shut the reactor down from rated power to the cold condition in the event that all withdrawn control rods cannot be inserted to achieve reactor shutdown.

(20) The Containment Atmospheric Monitoring System (CAM) instrumentation and controls sense gamma radiation and hydrogen and oxygen concentrations in the containment and drywell post LOCA. High alarm conditions annunciate in the main control room.

(21) The Radwaste Systems instrumentation and controls support manual processing and disposing of the radioactive process wastes generated during power operation. The Radwaste Control System includes liquid, gaseous, and solid radwaste subsystems.

(22) The Reactor Water Cleanup (RWCU) System instrumentation and controls provide manual initiation and automatic operation of system equipment to maintain high water purity and reduce concentrations of fission products in the reactor water.

(23) The Standby Power Systems instrumentation and controls provide manual and/or automatic initiation of system equipment, monitor all important parameters and annunciate abnormal conditions, and initiate protective action to shutdown the diesel generator when an out of tolerance condition exists. The diesel generator control system, including its ability to bypass certain trips on LOCA, is described in detail in Section 8.3.1.1.2.

(24) The Leak Detection Systems instrumentation and controls use various temperature, pressure, level and flow sensors to detect water and steam leakages in selected reactor systems and to initiate annunciation and provide isolation signal (in certain cases) to limit leakage from the reactor coolant pressure boundary when limiting leakage conditions exists.

(25) Residual Heat Removal (RHR) System instrumentation and controls provide automatic and manual initiation of cooling to remove the decay and sensible heat from the reactor vessel, containment and suppression pool. The RHR system instrumentation and controls also provide manual initiation of the FWLC mode to prevent the release of containment atmosphere through the feedwater lines after a DBA LOCA. The following modes of operation are provided.

a. Low Pressure Coolant Injection (LPCI) mode provides automatic and manual initiation of coolant injection to the reactor vessel to provide water following the design basis loss-of-coolant accident.

b. Containment Spray Cooling mode provides automatic and manual initiation of coolant spray to condense steam in the containment and cool non-condensibles in the containment atmosphere.

c. Suppression Pool Cooling mode provides manual initiation of cooling of the suppression pool water.

d. Reactor Shutdown Cooling mode provides manual initiation of cooling to remove the decay and sensible heat from the reactor vessel so the reactor can be refueled and serviced.

e. Feedwater Leakage Control (FWLC) mode is manually initiated approximately 20 minutes after a DBA LOCA to provide water from RHR to the feedwater lines, when the pressure in the feedwater lines is below the RHR system maximum operating pressure, providing a water seal at the outboard feedwater isolation check valves (1B21-F032A/B) and gate valves (1B21-F065A/B) to prevent the release of containment atmosphere through the feedwater piping release path.

(26) Fuel Pool Cooling and Cleanup System - instrumentation and controls senses water temperatures and provides for cooling of the fuel pools.

(27) The Containment Building HVAC System instrumentation and controls initiate operation of the containment isolation valves upon receipt of a containment isolation signal. The instrumentation and controls also function to limit the maximum ambient temperatures in accessible and non-accessible areas.

(28) The Drywell Purge System instrumentation and controls function to regulate the pressure in the drywell and to purge the drywell atmosphere through filters to allow personnel access to the drywell.

(29) The Main Steamline Isolation Valve Leakage Control System (MSIV-LCS) instrumentation and controls accommodate MSIV bypass leakage and minimize the release of fission products to the atmosphere following design-basis loss-of-coolant accident (LOCA).

(30) Safety-Related Display instrumentation is provided to enable the operator to monitor the performance of safety-related systems and to take manual action if such action is necessary.

(31) The Diesel Fuel Oil instrumentation and controls function to maintain the day tanks at the appropriate levels, monitor and regulate the flow of diesel oil and to initiate annunciation of low tank levels in the control room.

(32) The Drywell Cooling System instrumentation and controls function to limit the environmental temperatures of the various drywell zones within ranges dictated by equipment requirements.

(33) The Radwaste Building HVAC System instrumentation and controls function to limit the environmental temperature of the control area and maintain a negative pressure with respect to the atmosphere in potentially contaminated areas.

(34) Remote Shutdown from outside the main control room is provided to assure safe shutdown of the reactor in the event the main control room should become uninhabitable.

(35) The Recirculation Pump Trip (RPT) Subsystem instrumentation and controls are provided to assure and supplement shutdown at the end of fuel cycle when control rod worths are reduced by core nuclear characteristics.

(36) The Suppression Pool Makeup System instrumentation and controls are provided for the transfer of water from the upper fuel transfer pool to the suppression pool when required.

(37) The Diesel-Generator Room Ventilation System instrumentation and controls (1) regulates ventilation in the diesel-generator room and limit the maximum ambient temperature; (2) regulate ventilation in the oil storage room and limit the maximum ambient temperature; and (3) regulate ventilation in the oil day tank room and limit the maximum ambient temperature when the respective diesel generator is in the operating mode.

(38) The Shutdown Service Water Pump Cooling System instrumentation and controls regulate the cooling system to limit the pump room ambient temperature.

(39) The Essential Switchgear Heat Removal System instrumentation and controls regulate the switchgear heat removal system to limit the ambient temperature maximum in the switchgear rooms and in the battery rooms.

(40) The Emergency Core Cooling System Equipment Room HVAC instrumentation and controls regulate the equipment room HVAC to limit the ambient temperature in the following rooms: LPCS pump room; RHR pump rooms A, B, and C; RHR Heat Exchange Rooms A and B; RCIC pump room and HPCS pump room.

(41) The Auxiliary Building HVAC System instrumentation and controls function to limit the maximum ambient temperature in the auxiliary building.

(42) The Fuel Building HVAC System instrumentation and controls function to isolate the fuel building upon receipt of an isolation signal. The instrumentation and controls also function to limit the maximum ambient temperature in nonaccessible areas.

(43) The CGCS Equipment Cubicle Cooling System instrumentation and controls regulate the cooling system to limit the maximum ambient temperature in the CGCS equipment cubicles.

7.1.1.3 Classification

7.1.1.3.1 Safety-Related Systems

Safety systems provide actions necessary to assure safe shutdown to protect the integrity of radioactive material barriers and/or prevent the release of radioactive material in excess of allowable dose limits. Safety systems may consist of components, groups of components, systems, or groups of systems. Engineered Safety Feature (ESF) systems are included in this category. ESF systems have the function of mitigating the consequences of design basis accidents.

7.1.1.3.2 Power Generation Systems

Power generation systems are reactor support systems which are not required to protect the integrity of radioactive material barriers or prevent the release of radioactive material in excess of allowable dose limits. The instrumentation and control portions of these systems may, by their actions, prevent the plant from exceeding preset limits which would otherwise initiate action of the safety systems.

7.1.1.3.3 General Functional Requirements of Design Bases

Plant systems may have both a safety design basis and a power generation design basis depending on their function. The safety design basis states in functional terms the unique design requirements that establish limits for the operation of the system. The general functional requirement portion of the safety design basis presents those requirements which have been determined to be sufficient to ensure the adequacy and reliability of the system from a safety viewpoint. Many of these requirements have been incorporated into various codes, criteria, and regulatory requirements.

7.1.1.3.4 Specific Regulatory Requirements

The plant systems have been examined with respect to specific regulatory requirements which are applicable to the subject instrumentation and controls systems. These regulatory requirements include:

(1) Title 10 Code of Federal Regulations.

(2) NRC Regulatory Guides.

(3) Industry codes and standards.

The specific regulatory requirements applicable to each system's instrumentation and control is specified in Table 7.1-3.

7.1.2 Identification of Safety and Power Generation Criteria

7.1.2.1 General

Design bases and criteria for instrumentation and control equipment design are based on the need to have the system perform its intended function while meeting the requirements of applicable general design criteria, regulatory guides, industry standards, and other documents.

7.1.2.1.1 Reactor Protection (Trip) System (RPS) - Instrumentation and Control

7.1.2.1.1.1 Safety Design Bases

7.1.2.1.1.1.1 General Functional Requirements

The reactor protection (trip) system (RPS) is designed to meet the following functional requirements.

(1) RPS shall initiate a reactor scram with precision and reliability to prevent or limit fuel damage following abnormal operational transients.

(2) RPS shall initiate a scram with precision and reliability to prevent damage to the reactor coolant pressure boundary as a result of excessive internal pressure; that is, to prevent nuclear system pressure from exceeding the limit allowed by applicable industry codes.

(3) To limit the uncontrolled release of radioactive materials from the fuel assembly or reactor coolant pressure boundary, the RPS shall precisely and reliably initiate a reactor scram on gross failure of either of these barriers.

(4) To detect conditions that threaten the fuel assembly or reactor coolant pressure boundary, RPS inputs shall be derived from variables that are true, direct measures of operational conditions.

(5) RPS shall respond correctly to the sensed variables over the expected range of magnitudes and rates of change.

(6) A sufficient number of sensors shall be provided for monitoring essential variables that have spatial dependence.

(7) The following bases assure that the RPS is designed with sufficient reliability:

a. If failure of a control or regulating system causes a plant condition that requires a reactor scram but also prevents action by necessary RPS

channels, the remaining portions of the reactor protection system shall meet the requirements 1, 2, and 3 above.

b. Loss of one power supply shall neither cause nor prevent a reactor scram.

c. Once initiated, a RPS action shall go to completion. Return to normal operation shall require deliberate operator action.

d. There shall be sufficient electrical and physical separation between redundant instrumentation and control equipment monitoring the same variable to prevent environmental factors, electrical transients, or physical events from impairing the ability of the system to respond correctly.

e. Earthquake ground motions, as amplified by building and supporting structures, shall not impair the ability of RPS to initiate a reactor scram, with the exception of turbine building trips which originate in a non-seismic building. These are backed up by diverse variables such as pressure and power trips.

f. No single failure within RPS shall prevent proper reactor protection system action, when required, to satisfy safety design bases 1, 2, and 3 above.

g. Any one intentional bypass, maintenance operation, calibration operation, or test to verify operational availability shall not impair the ability of RPS to respond correctly.

h. The system shall be designed so that the required number of sensors for any monitored variable exceeding the scram set point will initiate an automatic scram.

(8) The following bases reduce the probability that RPS operational reliability and precision will be degraded by operator error:

a. Access to trip settings, component calibration controls, test points, and other terminal points shall be under the control of plant operations supervisory personnel.

b. Manual bypass of instrumentation and control equipment components shall be under the control of the main control room operator. If the ability to trip some essential part of the system has been bypassed, this fact shall be continuously annunciated in the main control room.

7.1.2.1.1.1.2 Specific Regulatory Requirements

The specific requirements applicable to RPS instrumentation and control are shown in Table 7.1-3.

7.1.2.1.1.2 Power Generation Design Bases

RPS has two objectives, one of which is availability, the other, freedom from spurious scrams. The set points, power sources, and control and instrumentation are arranged in such a manner as to minimize spurious scrams.

7.1.2.1.2 Containment and Reactor Vessel Isolation Control System (CRVICS) - Instrumentation and Controls

7.1.2.1.2.1 Safety Design Bases

7.1.2.1.2.1.1 General Functional Requirements

The following functional design bases have been implemented in CRVICS:

(1) To limit the release of radioactive materials to the environs, CRVICS shall, with precision and reliability, initiate timely isolation of penetrations through the containment whenever the values of monitored variables exceed preselected operational limits.

(2) To provide assurance that important variables are monitored with a precision sufficient to fulfill Safety Design Basis (1), CRVICS shall respond correctly to the sensed variables over the expected design range of magnitudes and rates of change.

(3) To provide assurance that important variables are monitored to fulfill Safety Design Basis (1), a sufficient number of independent sensors shall be provided for monitoring essential variables.

(4) To provide assurance that conditions indicative of a failure of the reactor coolant pressure boundary are detected to fulfill Safety Design Basis (1), CRVICS inputs shall be derived from variables that are accurate, direct measures of existing plant conditions.

(5) The time required to close the main steam line isolation valves shall be short to limit the radiological consequences and loss of coolant from a steam line break outside containment.

(6) The following safety design bases are specified for the systems controlling automatic isolation valves to provide assurance that the closure of automatic isolation valves is initiated when required to fulfill Safety Design Basis (1):

a. Any single failure, maintenance operation, calibration operation, or test to verify operational availability shall not impair the functional ability of the isolation control system.

b. The system is designed so that a specified number of sensors for any monitored variable exceeding the isolation set point will initiate automatic isolation.

c. Where a plant condition that requires isolation can be caused by a failure or malfunction of a control or regulating system, and the same failure or malfunction prevents action by one or more isolation control system channels designed to provide protection against the unsafe condition, the remaining portions of the isolation control system shall meet the requirements of Safety Design Bases (1), (2), (3), and (7)a.

d. The power supplies for the CRVICS shall be arranged so that loss of one supply cannot prevent automatic isolation when required.

e. The system is designed so that, once initiated, automatic isolation action goes to completion. Return to normal operation after isolation action shall require deliberate operator action.

f. There is sufficient electrical and physical separation of wiring and piping between instrument channels monitoring the same essential variable to prevent environmental factors, electrical faults, and/or physical design basis events from impairing the ability of the system to respond correctly.

g. Earthquake ground motions of SSE magnitude shall not impair the ability of the CRVICS to initiate automatic isolation.

(7) The following safety design basis is specified to assure that the isolation of main steam lines is accomplished:

a. The isolation valves in each of the main steamlines shall not rely on normal electrical power to achieve closure. Valve closure power is from diverse stored energy sources.

(8) To reduce the probability that the operational reliability of the CRVICS will be degraded by operator error, the following safety design bases are specified for automatic isolation valves:

a. Access to all trip settings, component calibration controls, test points, and other terminal points for equipment associated with essential monitored variables shall be under the control of the plant supervisory personnel.

b. The means for bypassing instrument channels, trip logics, or system components shall be under the control of the main control room operator. If the ability to trip some essential part of the system has been bypassed, this fact shall be continuously annunciated in the control room.

(9) In the event of a failure of the reactor coolant pressure boundary, it shall be possible for the operator to manually initiate isolation of the containment and reactor vessel from the main control room.

(10) The following bases are specified to provide the operator with the means to assess the condition of the containment and reactor vessel isolation control system and to identify conditions indicative of a failure of the reactor coolant pressure boundary.

a. The CRVICS is designed to provide the operator with information pertinent to the status of the system.

b. Means are provided for prompt identification of instrument channel and trip system responses.

(11) It shall be possible to check the operational availability of each instrument channel and trip logic during reactor operation.

7.1.2.1.2.2 Specific Regulatory Requirements

The specific regulatory requirements applicable to CRVICS instrumentation and controls are shown in Table 7.1-3. The degree of conformance is discussed under the analysis section for each system.

7.1.2.1.3 Emergency Core Cooling System (ECCS) – Instrumentation and Controls

7.1.2.1.3.1 Safety Design Bases

7.1.2.1.3.1.1 General Functional Requirements

ECCS control and instrumentation shall be designed to meet the following functional safety design bases:

(1) Automatically initiate and control ECCS to prevent fuel cladding temperatures from reaching the limits of 10CFR50.46 (2200°F).

(2) Respond to a need for emergency core cooling, regardless of the physical location of the malfunction or break that causes the need.

(3) The following safety design bases are specified to limit dependence on operator judgement in times of stress:

a. ECCS shall respond automatically so that no action is required of plant operators within 10 minutes after a loss-of-coolant accident.

b. The performance of ECCS shall be indicated by main control room instrumentation.

c. Facilities for manual control of ECCS shall be provided in the main control room.

7.1.2.1.3.1.2 Specific Regulatory Requirements

The specific requirements applicable to the controls and instrumentation for ECCS are shown on Table 7.1-3.

7.1.2.1.4 Neutron Monitoring System (NMS) - Instrumentation and Controls

7.1.2.1.4.1 Source Range Monitor (SRM) Subsystem

7.1.2.1.4.1.1 Power Generation Design Basis

The source range monitor (SRM) subsystem meets the following power generation design bases:

(1) Neutron sources and neutron detectors together shall result in a signal-to-noise ratio of at least 2:1 and a count rate of at least three counts per second with all control rods fully inserted prior to initial power operation.

(2) The SRM shall be able to perform the following functions:

a. Indicate a measurable increase in output signal from at least one detecting channel before the reactor period is less than 20 seconds during the worst possible startup rod withdrawal conditions.

b. Indicate substantial increases in output signals with the maximum permitted number of SRM channels out of service during normal reactor startup operations.

c. The SRM channels shall be on scale when the IRM first indicates neutron flux during a reactor startup.

d. Provide a measure of the time rate of change of the neutron flux (reactor period) for operational convenience.

e. Generate interlock signals to block control rod withdrawal if the count rate exceeds a preset value or falls below a preset limit (if the IRMs are not above the second range) or if certain electronic failures occur.

(3) Perform its function in the maximum normal thermal and radiation environment.

(4) Loss of a single power bus will not disable the monitoring and alarming functions of all the available monitors.

7.1.2.1.4.1.2 Specific Regulatory Requirements

Specific regulatory requirements applicable to this system are listed in Table 7.1-3.

7.1.2.1.4.2 Intermediate Range Monitor (IRM) Subsystem

7.1.2.1.4.2.1 Safety Design Basis

The IRM generates a trip signal that can be used to prevent fuel damage resulting from anticipated or abnormal operational transients that occur while operating in the intermediate power range. The independence and redundancy incorporated in the design of the IRM is consistent within the safety design bases of the reactor protection system.

7.1.2.1.4.2.2 Specific Regulatory Requirements

The IRM is designed in accordance with the specific regulatory requirements shown in Table 7.1-3 for the neutron monitoring system (NMS).

7.1.2.1.4.2.3 Power Generation Design Bases

The IRM generates an interlock signal to block rod withdrawal if the IRM reading exceeds a preset value or if the IRM is not operating properly. The IRM is designed so that overlapping neutron flux indications exist within the SRM and APRM subsystems.

7.1.2.1.4.3 Local Power Range Monitor (LPRM) Subsystem

7.1.2.1.4.3.1 Specific Regulatory Requirements

The LPRM is designed to provide a sufficient number of LPRM signals to satisfy the APRM safety design bases.

7.1.2.1.4.3.2 Power Generation Design Bases

The LPRM supplies:

(1) Signals to the APRM that are proportional to the local neutron flux at various locations within the reactor core;

(2) Signals to alarm high or low local neutron flux;

(3) Signals proportional to the local neutron flux to drive indicating meters and auxiliary devices used for operator evaluation of power distribution, local heat flux, minimum critical power, and fuel burnup rate.

7.1.2.1.4.4 Average Power Range Monitor (APRM) Subsystem

7.1.2.1.4.4.1 Safety Design Basis

Under the worst permitted input LPRM bypass conditions, the APRM is capable of generating a trip signal in response to average neutron flux increases in time to prevent fuel damage. The independence and redundancy incorporated into the design of the APRM is consistent with the safety design bases of the reactor protection system.

7.1.2.1.4.4.2 Specific Regulatory Requirements

The APRM is designed in accordance with the specific regulatory requirements listed in Table 7.1-3 for the NMS.

7.1.2.1.4.4.3 Power Generation Design Bases

The APRM provides the following functions:

(1) A continuous indication of average reactor power (neutron flux) from a few percent to 125% of rated reactor power;

(2) Interlock signals for blocking further rod withdrawal to avoid an unnecessary scram actuation;

(3) A reference power level for controlling reactor recirculation system flow; and

(4) A simulated thermal power signal derived from each APRM channel which approximates the dynamic effects of the fuel.

7.1.2.1.4.5 Traversing Incore Probe (TIP) Subsystem

7.1.2.1.4.5.1 Power Generation Design Bases

The TIP meets the following power generation design bases:

(1) Provide a signal proportional to the axial neutron flux distribution at the radial locations of the LPRM detectors. This signal shall be of high precision to allow reliable calibration of LPRM gains.

(2) Provide accurate indication of the position of the flux measurement to allow pointwise or continuous measurement of the axial neutron flux distribution.

7.1.2.1.4.5.2 Specific Regulatory Requirements

Specific regulatory requirements applicable to this system are listed in Table 7.1-3.

7.1.2.1.4.6 Oscillation Power Range Monitor (OPRM) Subsystem

7.1.2.1.4.6.1 Safety Design Basis

Under the worst permitted input LPRM bypass conditions, the OPRM is capable of generating a trip signal in response to thermal hydraulic induced oscillations in time to prevent exceeding the Minimum Critical Power Ratio. The independence and redundancy incorporated into the design of the OPRM is consistent with the safety design bases of the Reactor Protection System.

7.1.2.1.4.6.2 Specific Regulatory Requirements

The OPRM is designed in accordance with the specific regulatory requirements listed in Table 7.1-3 for the NMS.

7.1.2.1.4.6.3 Power Generation Design Bases

The OPRM provides the following functions:

(1) An alarm alerting the operator to the areas of the core operating map where oscillations are possible.

(2) An alarm alerting the operator to the onset of oscillations.

7.1.2.1.5 Refueling Interlocks - Instrumentation and Controls

7.1.2.1.5.1 Power Generation Design Bases

Refueling interlocks meet the following power generation design bases:

(1) During fuel movements in or over the reactor core, all control rods shall be in their fully inserted positions.

(2) No more than one control rod shall be withdrawn from its fully inserted position at any time the reactor is in the refuel mode.

7.1.2.1.5.2 Specific Regulatory Requirements

The refueling interlocks are designed in accordance with the specific regulatory requirements shown in Table 7.1-3.

7.1.2.1.6 Rod Control and Information System (RCIS) -Instrumentation and Controls

7.1.2.1.6.1 Safety Design Basis

The Rod Control and Information System (RCIS) instrumentation and controls meet the following safety design bases:

(1) The circuitry provided for the manipulation of control rods shall be designed so that no single failure can negate the effectiveness of a reactor scram.

(2) Repair, replacement, or adjustment of any failed or malfunctioning component shall not require that any element needed for reactor scram be bypassed unless a bypass is normally allowed.

7.1.2.1.6.2 Specific Regulatory Requirements

The Rod Control and Information System instrumentation and controls are designed in accordance with the specific regulatory requirements shown in Table 7.1-3.

7.1.2.1.6.3 Power Generation Design Bases

The Rod Control and Information System is designed to meet the following power generation design bases:

(1) Inhibit control rod withdrawal following erroneous control rod manipulations so that reactor protection system action (scram) is not required.

(2) Inhibit control rod withdrawal in time to prevent local fuel damage as a result of erroneous control rod manipulation.

(3) Inhibit control rod movement whenever such movement would result in operationally undesirable core reactivity conditions or whenever instrumentation is incapable of monitoring the core thermal neutron flux.

(4) Limit the potential for inadvertent rod withdrawals leading to reactor protection system action by designing the Rod Control and Information System in such a way that deliberate operator action is required to effect a continuous rod withdrawal.

(5) Provide the operator with the means to achieve prescribed control rod patterns, and provide information pertinent to the position and motion of the control rods in the main control room.

7.1.2.1.7 Reactor Vessel - Instrumentation

7.1.2.1.7.1 Power Generation Design Basis

Reactor vessel instrumentation is designed to provide the reactor operator with sufficient indication of reactor vessel coolant temperature, reactor vessel water level, reactor vessel pressure and nuclear system leakage to maintain proper normal operating conditions. These instruments augment existing information such that the operator can start up, operate, shut down and service the reactor in an efficient manner.

7.1.2.1.7.2 Specific Regulatory Requirements

Specific regulatory requirements applicable to this system are listed in Table 7.1-3.

7.1.2.1.8 Recirculation Flow Control System – Instrumentation and Controls

7.1.2.1.8.1 Power Generation Design Bases

The recirculation flow control system is designed to meet the following power generation design bases:

(1) To allow variation of the recirculation flow rate.

(2) To allow manual recirculation flow adjustment, so that manual control of reactor power level is possible.

7.1.2.1.8.2 Specific Regulatory Requirements

Specific regulatory requirements applicable to this system are listed in Table 7.1-3.

7.1.2.1.9 Feedwater Control System - Instrumentation and Controls

The reactor feedwater control system regulates the feedwater flow over the entire power range of the reactor (1) to maintain adequate water level in the reactor vessel according to the requirements of the steam separators and (2) to prevent unnecessary initiation of backup safety systems due to low water level.

7.1.2.1.10 Pressure Regulator and Turbine-Generator System - Instrumentation and Controls

7.1.2.1.10.1 Power Generation Design Bases

Since the turbine is slaved to the reactor, operation of the reactor demands that a pressure regulator concept be applied to maintain a constant (constant within the range of the regulator controller proportional band setting) turbine inlet pressure.

The turbine pressure regulator, in maintaining constant (constant within the range of the regulator controller proportional band setting) turbine inlet pressure, operates the steam bypass valves such that a portion of nuclear boiler rated flow can be bypassed for transient steam flow loads above that which can be accepted by the turbine as well as during the startup and shutdown phase. The pressure regulator and turbine-generator control system accomplishes the following control functions:

(1) Control turbine speed and turbine acceleration.

(2) Operate the steam bypass system to keep reactor pressure within limits, and avoid large power transients.

(3) Control main turbine stop valve pressure within the proportional band setting of the pressure regulator.

(4) Deleted

7.1.2.1.10.2 Specific Regulatory Requirements

Specific regulatory requirements applicable to this system are listed in Table 7.1-3.

7.1.2.1.11 Process Radiation Monitoring System - Instrumentation and Controls

7.1.2.1.11.1 Deleted

7.1.2.1.11.2 Containment Building Fuel Transfer Ventilation Plenum Radiation Monitoring Subsystem

7.1.2.1.11.2.1 Safety Design Basis

The containment building fuel transfer ventilation plenum radiation monitoring subsystem is designed to meet the following safety design bases:

(1) The subsystem is able to detect, measure, indicate, and record the gamma radiation level in the plenum.

(2) Whenever the level of radiation exceeds a preset level, the subsystem actuates annunciators in the main control room, initiates shutdown of fans and isolation of the primary and secondary containment and automatically starts the standby gas treatment system.

7.1.2.1.11.2.2 Specific Regulatory Requirements

The subsystem instrumentation and controls conform to the specific regulatory requirements shown in Table 7.1-3.

7.1.2.1.11.2.3 Power Generation Design Basis

The subsystem is designed to display locally and in the main control room an indication of gross gamma radiation level in the plenum.

7.1.2.1.11.3 Containment Building Exhaust Duct Radiation Monitoring Subsystem

7.1.2.1.11.3.1 Safety Design Basis

The containment building exhaust duct radiation monitoring subsystem is designed to meet the following safety design bases:

(1) The subsystem is able to detect, measure, indicate and record the gamma radiation level in the duct.

(2) Whenever the level of radiation exceeds a predetermined level, the subsystem actuates annunciators in the main control room, initiates shutdown of fans and isolation of the primary and secondary containment and automatically starts the standby gas treatment system.

7.1.2.1.11.3.2 Specific Regulatory Requirements

The subsystem instrumentation and controls conform to the specific regulatory requirements shown in Table 7.1-3.

7.1.2.1.11.3.3 Power Generation Design Basis

The subsystem is designed to display locally and in the main control room an indication of gross gamma radiation level in the duct.

7.1.2.1.11.4 Fuel Building Ventilation Exhaust Duct Radiation Monitoring Subsystem

7.1.2.1.11.4.1 Safety Design Bases

The fuel building ventilation exhaust duct radiation monitoring subsystem is designed to meet the following safety design bases:

(1) The subsystem is able to detect, measure, indicate and record the gamma radiation level in the duct.

(2) Whenever the level of radiation exceeds a preset level, the subsystem actuates annunciators in the main control room, initiates shutdown of fans and isolation of the normal HVAC system, and automatically starts the standby gas treatment system.

7.1.2.1.11.4.2 Specific Regulatory Requirements

The subsystem instrumentation and controls conform to the specific regulatory requirements shown in Table 7.1-3.

7.1.2.1.11.4.3 Power Generation Design Basis

The subsystem is designed to display locally and in the main control room an indication of gross gamma radiation in the duct.

7.1.2.1.11.5 Control Room Air Intake Radiation Monitoring Subsystem

7.1.2.1.11.5.1 Safety Design Basis

The control room air intake radiation monitoring subsystem is designed to meet the following safety design bases:

(1) The subsystem is able to detect, measure, indicate, and record the gamma radiation level at each of the two control room air intakes.

(2) Whenever the level of radiation exceeds a predetermined level, the subsystem actuates annunciators in the main control room and starts one of the two makeup air filter trains.

7.1.2.1.11.5.2 Specific Regulatory Requirements

The subsystem instrumentation and controls conform to the specific regulatory requirements shown in Table 7.1-3.

7.1.2.1.11.5.3 Power Generation Design Basis

The subsystem is designed to display locally and in the main control room an indication of gross gamma radiation at the control room air intakes.

7.1.2.1.12 Area Radiation Monitoring System (ARMS) - Instrumentation and Controls

7.1.2.1.12.1 Power Generation Design Basis

This system is designed to monitor radiation levels in areas where radioactive materials may be present, stored, handled, or inadvertently introduced. Each monitor is capable of sounding a high radiation alarm and indicating the radiation level to provide personnel protection.

7.1.2.1.12.2 Specific Regulatory Requirements

Specific regulatory requirements applicable to this system are listed in Table 7.1-3.

7.1.2.1.13 Performance Monitoring System (PMS) - Instrumentation

7.1.2.1.13.1 Power Generation Design Bases

(1) The performance monitoring system is designed to periodically determine the three dimensional power density distribution for the reactor core and provide printed logs that permit accurate assessment of core thermal performance.

(2) The performance monitoring system provides near continuous monitoring of the core operating level and initiates appropriate computer log alarms based on established core operating limits to aid the operator in assuring that the core is operating within acceptable limits at all times especially during periods of power level changes.

(3) The performance monitoring system provides computer initiated and on-demand isotopic composition data for each fuel bundle in the core.

(4) The performance monitoring system provides status alarm logging of selected nuclear systems alarm inputs, to aid in the general operation of the plant.

(5) The performance monitoring system provides post-scram analysis logging of the sequence of changes for selected digital inputs on reactor scram trip devices and logging of stored data before and after a reactor scram for selected analog inputs.

(6) The performance monitoring system is able to perform certain "balance of plant" calculations to aid in maintaining efficiency of operation.

7.1.2.1.14 Standby Gas Treatment System (SGTS) – Instrumentation and Controls

7.1.2.1.14.1 Safety Design Basis

The instrumentation and controls for this system meet the following safety design bases:

(1) The standby gas treatment system instrumentation and controls start the standby gas treatment system to limit the offsite and control room dose to the limits of 10 CFR 50.67 and General Design Criterion 19 respectively following an accident.

(2) The standby gas treatment system responds automatically so that no action is required of station operators following a loss-of-coolant or fuel-handling accident.

(3) No single failure, maintenance, calibration, or test operation prevents operation of the standby gas treatment system.

(4) Any installed means of manually interrupting the availability of the standby gas treatment system is under the control of the operator or supervisory personnel.

(5) Loss of offsite electric power and instrument air does not affect the normal functioning of the SGTS controls and instrumentation.

(6) The physical events accompanying a loss-of-coolant or fuel-handling accident do not prevent correct functioning of the SGTS controls and instrumentation.

(7) Seismic motions resulting from earthquake ground motion, missile, wind, and flood do not impair the operation of the SGTS controls and instrumentation.

(8) To assure availability of the standby gas treatment system, it is possible to test the response of the controls and instrumentation.

(9) The requirements of IEEE 279, IEEE 308, IEEE 323, IEEE 338, and IEEE 344 are met by the standby gas treatment system controls and instrumentation. In addition, General Design Criteria 13 and 19 of 10 CFR 50, Appendix A have been implemented in the design of this control system.

7.1.2.1.14.2 Specific Regulatory Requirements

Specific regulatory requirements applicable to this system are listed in Table 7.1-3.

7.1.2.1.15 Main Control Room HVAC System Instrumentation and Controls

The main control room heating, ventilating, and air-conditioning system is described in Section 9.4. The instrumentation and controls for this system meet the design bases described in the following subsections.

7.1.2.1.15.1 Safety Design Basis

(1) Deleted

(2) The system controls are interlocked with the minimum makeup intake radiation monitors. When radiation above a preset level is detected in either of the intakes the air flow is diverted through the appropriate makeup filter train to maintain the main control room habitability.

(3) The system operates in conjunction with ionization detectors to sense the presence of combustion products in the main control room air return ducts and outside air intakes.

(4) The system permits manual purging of the main control room with 100% outside air or manual/automatic routing of the outside air-return air mixture from the main control room through the normally bypassed smoke and odor removal charcoal adsorber filters.

(5) No single failure, maintenance, calibration, or test operation of one train prevents the functioning of the main control room redundant HVAC system controls and instrumentation.

(6) Any installed means of manual interruption of availability of the main control room HVAC system is under control of the operator or supervisory personnel.

(7) Loss of offsite electric power does not affect the normal functioning of controls and instrumentation.

7.1.2.1.15.2 Specific Regulatory Requirements

Specific regulatory requirements applicable to this system are listed in Table 7.1-3.

7.1.2.1.15.3 Power-Generation Design Bases

The main system controls the temperature and humidity inside the control room and maintains the main control room facility at a positive pressure with respect to adjacent areas. It also controls the temperature and humidity inside the computer room.

7.1.2.1.16 Shutdown Service Water System - Instrumentation and Control

7.1.2.1.16.1 Safety Design Basis

The shutdown service water (SSW) system instrumentation and controls shall be designed to meet the following safety design bases:

(1) Plant Service Water (PSWS) shall isolate from the Shutdown Service Water System automatically upon low header pressure.

(2) During a DBA, the equipment required for normal operation only is automatically isolated from the SX System, and cooling is directed only to safety related equipment.

(3) Means shall be provided in the Control Room to manually start the shutdown service water pumps.

7.1.2.1.16.2 Specific Regulatory Requirements

Compliance with the regulatory requirements is given in Subsection 7.3.2.5.

7.1.2.1.16.3 Power Generation Design Basis

Instrumentation and controls for the normal station operation of the SSW system shall provide the control room operator with indications and out-of-limits alarms for SSW operating conditions, and manual controls for the system.

7.1.2.1.17 Containment Combustible Gas Control System - Instrumentation and Controls

7.1.2.1.17.1 Safety Design Basis

The design basis for the combustible gas control system is discussed in Subsection 6.2.5.1.

7.1.2.1.17.2 Specific Regulatory Requirements

Specific regulatory requirements met by the subject system are given in Table 7.1-3.

7.1.2.1.18 Reactor Core Isolation Cooling (RCIC) System - Instrumentation and Controls

7.1.2.1.18.1 Safety Design Bases

(1) The system is capable of maintaining sufficient coolant in the reactor vessel in case of an isolation with a loss of main feedwater flow.

(2) Provisions are made for automatic and remote manual operation of the system.

(3) Components of the RCIC system are designed to satisfy Seismic Category I design requirements.

(4) To provide a high degree of assurance that the system shall operate when necessary, the power supply for the system is from the station battery, an immediately available energy source of high reliability.

(5) To provide a high degree of assurance that the system shall operate when necessary, provision is made so that periodic testing can be performed during plant operation.

7.1.2.1.18.2 Specific Regulatory Requirements

RCIC is considered a Safe-Shutdown System. The specific requirements applicable to this subsystem are shown in Table 7.1-3.

7.1.2.1.19 Standby Liquid Control System (SLCS) - Instrumentation and Controls

7.1.2.1.19.1 Safety Design Basis

This system is capable of shutting the reactor down from full power to cold shutdown and maintaining the reactor in a subcritical state at atmospheric temperature and pressure conditions by pumping sodium pentaborate, a neutron absorber, into the reactor.

7.1.2.1.19.2 Specific Regulatory Requirements

The specific requirements applicable to system instrumentation and control are shown in Table 7.1-3.

7.1.2.1.19.3 Power Generation Design Basis

There is no power generation objective of this system.

7.1.2.1.20 Containment Atmosphere Monitoring System (CAM) - Instrumentation and Controls

7.1.2.1.20.1 Safety Design Basis

(1) The system is able to detect hydrogen and oxygen concentration and to provide a gross gamma radiation reading, which may be indicative of fuel failure, following a design basis loss of coolant accident.

(2) The system indicates the hydrogen and oxygen concentrations and the gamma dose rate inside the containment and drywell resulting from a design basis loss-

of-coolant accident. Alarms are provided as described in Subsection 7.6.1.10.11.2.

(3) Limits are established for concentrations of hydrogen and oxygen so that corrective action can be taken before;

a. A threat of significant compromise to the containment structure.

b. A threat of significant compromise to the equipment inside the containment.

7.1.2.1.20.2 Specific Regulatory Requirements

The containment atmosphere monitoring system is designed to meet the specific regulatory requirements listed in Table 7.1-3.

7.1.2.1.20.3 Power Generation Design Basis

The hydrogen/oxygen monitoring subsystem and the gross gamma monitoring subsystem are designed to display in the main control room the hydrogen and oxygen concentration and gross gamma radiation level inside the containment and drywell resulting from a design basis loss-of-coolant accident.

7.1.2.1.21 Radwaste System -- Instrumentation and Controls

7.1.2.1.21.1 Liquid Radwaste System

7.1.2.1.21.1.1 Specific Regulatory Requirements

Specific Regulatory requirements met by the liquid radwaste system include Regulatory Guide 1.21.

7.1.2.1.21.1.2 Power Generation Design Basis

The instrumentation and control system is designed to provide dependable measurement and control of the various liquid processing systems for station availability during normal and expected occurrence conditions.

7.1.2.1.21.2 Gaseous Radwaste System

7.1.2.1.21.2.1 Specific Regulatory Requirements

Specific regulatory requirements met by the system are listed in Table 7.1-3.

7.1.2.1.21.2.2 Power Generation Design Bases

The instrumentation and control system is designed to:

(1) Monitor and control the gaseous processing system and subsystems.

(2) Detect, indicate, and alarm a system or subsystem upset to provide sufficient time for corrective action.

7.1.2.1.21.3 Solid Radwaste System

7.1.2.1.21.3.1 Specific Regulatory Requirements

Specific Regulatory requirement met by the solid radwaste system include Regulatory Guide 1.143.

7.1.2.1.21.3.2 Power Generation Design Basis

The instrumentation and control system is designed to provide dependable measurement and control of the solid processing system for station availability during normal and expected occurrence conditions.

7.1.2.1.22 Reactor Water Cleanup (RWCU) System - Instrumentation and Controls

7.1.2.1.22.1 Power Generation Design Basis

The purpose of the reactor water cleanup system instrumentation and control is to provide manual and automatic control for continuous processing of the reactor water to maintain the purity within specified limits. Although the RWCU system is of importance to startup and long term operation, the reactor may operate while the RWCU is out of service.

7.1.2.1.22.2 Specific Regulatory Requirements

Specific regulatory requirements applicable to this system are listed in Table 7.1-3.

7.1.2.1.23 Standby Power Systems Instrumentation and Control

Refer to Section 8.3.

7.1.2.1.24 Leak Detection Systems - Instrumentation and Controls

7.1.2.1.24.1 Reactor Coolant Pressure Boundary Leakage Detection

7.1.2.1.24.1.1 Safety Design Bases

The safety design bases for the leak detection systems are as follows:

(1) Provide signals which will initiate automatic isolation (or provide alarms which indicate the possible need for manual isolation) of abnormal leakage before the results of this leakage become unacceptable.

(2) Limits shall be established on abnormal leakage so that corrective action can be taken before unacceptable results occur.

(3) The unacceptable results of failure to detect leakage are as follows:

a. A degradation of the reactor coolant pressure boundary in excess of specified limits.

b. Release of primary coolant fluid sufficient to cause unacceptable offsite radiological doses.

c. A leakage rate in excess of the capability of operable equipment to maintain reactor vessel water level.

7.1.2.1.24.1.2 Specific Regulatory Requirements

The parts of the leak detection systems that operate in conjunction with the containment and reactor vessel isolation control systems are designed to meet requirements of the Engineered Safety Feature Systems.

7.1.2.1.24.1.3 Power Generation Design Basis

A means is provided to detect and indicate in the control room abnormal leakage from the reactor coolant pressure boundary.

7.1.2.1.25 Reactor Shutdown Cooling Subsystem Mode - Instrumentation and Controls

7.1.2.1.25.1 Safety Design Bases

The reactor shutdown cooling mode function of the RHR system is designed to meet the following functional design bases:

(1) Instrumentation and controls are provided that will enable the removal of residual heat (decay heat and sensible heat) from the reactor vessel during normal shutdown.

(2) Manual controls for shutdown cooling are provided in the main control room and the remote shutdown panel.

(3) Performance of the shutdown cooling is indicated by main control room instrumentation and instrumentation in the remote shutdown panel.

7.1.2.1.25.2 Specific Regulatory Requirements

The specific requirements applicable to reactor shutdown cooling are shown in Table 7.1-3.

7.1.2.1.25.3 Power Generation Design Bases

The reactor shutdown cooling mode of the residual heat removal system (RHR) shall meet the following power generation design bases:

(1) Provide cooling for the reactor during the shutdown operation when the vessel pressure is below approximately 96.5 psig.

(2) Cool the reactor water to a temperature which is practical for refueling and servicing operation.

(3) Provide means for reactor head cooling by diverting part of the shutdown flow to a nozzle in the vessel head. This flow will condense the steam generated from the hot walls of the vessel while it is being flooded, thereby keeping system pressure down.

7.1.2.1.26 Fuel Pool Cooling Systems Instrumentation and Controls

7.1.2.1.26.1 Safety Design Basis

The spent fuel pool cooling and cleanup system is combined with the upper containment pool cooling and cleanup system to form one integrated fuel pool cooling and cleanup (FPC&C) system. The safety design basis of the integrated fuel pool cooling and cleanup system (FPC&C) is described in Subsection 9.1.3.1.1.

7.1.2.1.26.2 Specific Regulatory Requirements

The specific requirements applicable to the FPC&C system are shown in Table 7.1-3.

7.1.2.1.26.3 Power Generation Design Basis

The FPC&C system power generation design bases are described in Subsection 9.1.3.1.2.

7.1.2.1.27 Containment Building HVAC Instrumentation and Controls

7.1.2.1.27.1 Safety Design Basis

(1) The containment building ventilation system instrumentation and controls are non-safety related except for the isolation valves at the containment penetration and the intermediate pipe between them. Hence these instruments are not required to function in any but the normal station operating condition and therefore have no safety bases except for the containment building isolation valves.

(2) The system supply air penetration through the containment building boundary is equipped with two isolation valves in series to ensure containment isolation. This is also true of the exhaust air, even though the exhaust air uses the drywell purge system penetration through the containment building. The containment building isolation valves are spring loaded, air operated and fail close on loss of station or instrument air. This part of the system is designed for Seismic Category I Classification and Safety Class 2.

7.1.2.1.27.2 Specific Regulatory Requirements

Specific regulatory requirements met by this system are listed in Table 7.1-3.

7.1.2.1.27.3 Power Generation Design Basis

(1) The containment building ventilation system instrumentation and controls are designed to limit the maximum temperatures in generally accessible areas of the containment building and the potentially contaminated cubicles, including the steam tunnel. The temperature maintained in each area conforms to the equipment ambient requirements in that area.

(2) The system provides a quantity of filtered outdoor air to purge the building of possible contamination. Ventilation air is routed from accessible clean areas to

areas of potential contamination before exhausting to the common station HVAC vent.

(3) Detection of high radiation in the containment building ventilation system exhaust or the detection of a LOCA condition will activate alarms, isolate the containment building, and start the standby gas treatment system.

(4) The system components are designed with sufficient redundancy to ensure the power generation objective. Hence instruments and controls for this system are non-redundant.

(5) The supply air system operates manually and continuously except when the containment building is isolated. The exhaust air system operates manually and continuously except when the containment building is isolated or when the drywell purge system is operating. Isolation dampers at each supply and exhaust fan close when the fan is not running. There is an additional isolation damper at the supply air inlet, which closes when the supply air system is not operating. An automatic damper in the supply system ductwork regulates the flow of air to maintain the containment building at a negative pressure with respect to the outside ambient.

(6) The exhaust air is normally not treated but is monitored for radiation before it exits at the HVAC station vent.

7.1.2.1.28 Drywell Purge System Instrumentation and Controls

7.1.2.1.28.1 Safety Design Basis

(1) The drywell purge system instrumentation and controls are not required to function in any but the normal station operating condition and therefore have no safety bases except for the containment building exhaust/purge isolation valves.

(2) The system air penetration through the containment building boundary is equipped with two redundant isolation valves in series to ensure containment isolation. These isolation valves and the intermediate pipe between them are required during and after abnormal station operating conditions to maintain the containment boundary integrity. The valves are spring-loaded and air-operated and fail in a closed position on loss of electrical power or instrument air. This part of the system is designed for Seismic Category I and Safety Class 2. The valves close upon detection of high radiation in the containment building ventilation system exhaust or the detection of a LOCA condition.

(3) The system air penetrations through the drywell boundary are provided with redundant means of automatic isolation.

7.1.2.1.28.2 Specific Regulatory Requirements

Specific conformance of the instrumentation and controls to General Design Criterion 10 CFR 50, Appendix A does not apply.

7.1.2.1.28.3 Power Generation Design Basis

(1) The drywell purge system control and instrumentation are utilized to purge the drywell of potentially contaminated air whenever access to the drywell is desired. The control system also is designed to relieve slight drywell under- or overpressures during normal operation, under the direct supervision of control room personnel when operating procedures permit. Slight differential pressure (between drywell and containment) are expected only during temperature transients in the drywell which would occur during reactor startup and shutdown.

(2) The drywell purge control system is designed to purge the drywell at a nominal rate of greater than three air changes per hour and filter the air to the allowable release limits before it is exhausted to the atmosphere.

(3) The drywell purge control system is designed to filter containment building air following a release of radioactivity in the building. This filtration will be allowed only when the containment building pressure is below the pressure limitations identified in Subsection 9.4.7.2.

(4) The system is designed with sufficient redundancy to provide alternate and equivalent purge capability in case a system component is inoperative during drywell purge.

(5) Isolation dampers at each filter package close when the respective equipment is not operating.

(6) In the event of a loss of offsite electric power, the drywell purge system is shutdown, except for the low flow fans which are connected to the Class 1E buses.

7.1.2.1.29 Main Steam Line Isolation Control Valve-Leakage Control System (MSLIV-LCS) - Instrumentation and Controls

7.1.2.1.29.1 Safety Design Basis

Instrumentation and controls necessary for the functioning of the MSIV-LCS are designed in accordance with standards applicable to nuclear plant safety-related instrumentation and control systems.

The MSIV-LCS controls are provided with interlocks actuated from appropriately designed safety systems or circuits to prevent inadvertent MSIV-LCS operation.

7.1.2.1.29.2 Specific Regulatory Requirements

The specific requirements applicable to the MSIV-LCS are shown in Table 7.1-3.

7.1.2.1.30 Not Used

7.1.2.1.31 Safety-Related Display - Instrumentation

7.1.2.1.31.1 Safety Design Basis

The necessary display instrumentation shall be available to the reactor operator in the main control room to determine and accomplish all the required manual control actions consistent with safe plant operation.

7.1.2.1.31.2 Specific Regulatory Requirements

The specific requirements applicable to the safety-related display instrumentation are shown in Table 7.1-3.

7.1.2.1.31.3 Power Generation Design Basis

Sufficient and reliable display instrumentation shall be provided such that all the expected power operation actions and maneuvers can be reasonably accomplished by the reactor operator from the main control room.

7.1.2.1.32 Diesel Fuel Oil - Instrumentation and Controls

7.1.2.1.32.1 Safety Design Basis

The diesel fuel oil system instrumentation and controls shall be designed to meet the following functional safety design bases:

(1) Automatically control the diesel fuel oil transfer pumps to maintain required oil inventory in the diesel oil day tanks.

(2) Provide operator information to enable the verification of system performance.

7.1.2.1.32.2 Specific Regulatory Requirements

The specific criteria applicable to the diesel fuel oil system instrumentation and controls are shown in Table 7.1-3.

7.1.2.1.33 Drywell Cooling System Instrumentation and Controls

7.1.2.1.33.1 Safety Design Basis

(1) Instruments and controls provide for the drywell cooling fans, chilled water control, and the refrigeration units are non-nuclear safety-related, except for portions of the system which trip equipment on LOCA.

(2) The chilled water supply and return pipes penetrating through the primary containment and drywell boundary are equipped with Class 1E motor-operated isolation valves which close on high drywell pressure or low reactor water level (LOCA signal). This ensures primary containment isolation.

(3) The isolation valves may be manually opened and closed by a hand switch located on the main control benchboard. The presence of a containment isolation signal will override the manual selection of the valve. The containment isolation system is discussed in Subsection 6.2.4.

(4) The drywell cooling system can be operated during a loss of offsite power to prevent drywell pressure from exceeding 2 psig and thus resulting in a false LOCA signal.

7.1.2.1.33.2 Specific Regulatory Requirements

Specific regulatory requirements applicable to this system are listed in Table 7.1-3.

7.1.2.1.33.3 Power Generation Design Basis

(1) The redundant drywell cooling HVAC system and the chilled water system is designed with sufficient redundancy to ensure continuous operation under normal plant operating conditions.

(2) The drywell cooling HVAC system instrumentation and controls are designed to limit the operating temperature in the various areas of the drywell in conformance with equipment ambient temperature ratings.

7.1.2.1.34 Radwaste Building HVAC Instrumentation and Controls

7.1.2.1.34.1 Safety Design Basis

The radwaste building ventilation system is not required to function in any but the normal station operating condition and therefore has no safety bases.

7.1.2.1.34.2 Specific Regulatory Requirements

The guidelines of Regulatory Guide 8.8 are implemented where possible in the system design to minimize personnel exposure to airborne radioactivity.

7.1.2.1.34.3 Power Generation Design Basis

(1) The radwaste building ventilation system is designed to limit the maximum temperature of the served areas in accordance with Table 3.11-5 to conform with the equipment ambient requirements in that area.

(2) The system provides a quantity of filtered outdoor air to purge the building of possible contamination. Ventilation air is routed from accessible clean areas to areas of potential contamination before exhausting to the common station HVAC vent.

(3) The system is designed with sufficient redundancy to ensure the power generation objective.

(4) In the event of a loss of offsite electric power, the radwaste building ventilation system is shut down.

(5) The radwaste building ventilation system is designed to maintain the temperature in the radwaste monitoring area as stated in Subsection 9.4.13.2e.

(6) A minimum quantity of outdoor air is continuously provided to maintain a positive pressure in the radwaste monitoring area with respect to the surrounding areas to preclude the infiltration of potentially contaminated air.

(7) An automatic damper in the supply system ductwork regulates the flow of air to maintain the Radwaste Building at approximately 0.25 in. H_2O negative pressure with respect to atmosphere.

7.1.2.1.35 Containment Spray Cooling Mode (RHRS) - Instrumentation and Controls

7.1.2.1.35.1 Safety Design Basis

The containment spray cooling mode of the RHR system is designed to meet the following functional safety design bases:

(1) Instrumentation and controls are provided that will sense containment pressure and enable the system to provide condensation of steam in the containment and cool non-condensibles during a transient or accident event.

(2) All manual controls of the containment spray subsystem are provided in the main control room.

(3) Performance of the containment spray subsystem is indicated by main control room instrumentation.

7.1.2.1.35.2 Specific Regulatory Requirements

Specific regulatory requirements met by the containment spray system are listed in Table 7.1-3.

7.1.2.1.35.3 Power Generation Design Basis

There is no power generation design basis for this mode.

7.1.2.1.36 Remote Shutdown Instrumentation and Controls

7.1.2.1.36.1 Safety Design Bases

The remote shutdown system is designed to meet the following functional design bases:

(1) Instrumentation and controls are provided outside the main control room to allow placing the plant in hot shutdown after a scram from the main control room and then maintaining safe conditions during hot shutdown.

(2) Through the use of suitable procedures, provide the capability for subsequent cold shutdown of the reactor.

7.1.2.1.36.2 Specific Regulatory Requirements

Specific regulatory requirements met by the remote shutdown system are listed in Table 7.1-3.

7.1.2.1.37 Recirculation Pump Trip (RPT) Subsystem - Instrumentation and Controls

7.1.2.1.37.1 Safety Design

The Recirculation Pump Trip System is designed to meet the following functional design bases:

(1) Instrumentation and controls are provided that will cause both recirculation pumps to trip when the main turbine trips or a generator load rejection occurs. The RPT in conjunction with a RPS trip will occur automatically in order to ensure that the reactor core remains within the conservative thermal hydraulic limits during certain abnormal operational transients. This trip shifts the pumps to the low-frequency motor generators.

(2) Operational performance of the system is indicated by main control room instrumentation.

7.1.2.1.37.2 Specific Regulatory Requirements

Specific regulatory requirements met by the Recirculation Pump Trip feature are listed in Table 7.1-3.

7.1.2.1.38 Suppression Pool Cooling Mode - Instrumentation and Controls

7.1.2.1.38.1 Specific Regulatory Requirements

Part of RHR Containment Cooling. See Table 7.1-3.

7.1.2.1.38.2 Safety Design Basis

Instrumentation and controls are provided to allow the reactor operator to manually initiate suppression pool cooling.

7.1.2.1.38.3 Power Generation Design Basis

There is no power generation design basis for this mode.

7.1.2.1.39 Suppression Pool Makeup System - Instrumentation and Controls

7.1.2.1.39.1 Safety Design Basis

The design basis for the suppression pool makeup system is described in Subsection 6.2.7.

7.1.2.1.39.2 Specific Regulatory Requirements

Specific regulatory requirements met by the subject system are given in Table 7.1-3.

7.1.2.1.40 Diesel Generator Room Ventilation System Instrumentation and Controls

The instrumentation and controls for this system meet the design bases listed in the following:

7.1.2.1.40.1 Safety Design Basis

(1) The system prevents accumulation of diesel oil fumes in various areas of the diesel generator facility.

(2) Loss of offsite electric power does not affect the normal functioning of controls and instrumentation.

(3) The physical events accompanying a loss-of-coolant or fuel handling accident do not prevent correct functioning of the controls and instrumentation.

(4) Seismic motions resulting from earthquake ground motion, missile, wind and flood do not impair the operation of the controls and instrumentation.

(5) The requirements of IEEE Standards 279, 308, 323, 336, 338, 344 and 384 are met by the diesel-generator roof ventilation system instrumentation and controls. Additionally, General Design Criterion 13, of 10 CFR 50, Appendix A, has been implemented in the design of the control system.

7.1.2.1.40.2 Specific Regulatory Requirements

Specific regulatory requirements applicable to this system are listed in Table 7.1-3.

7.1.2.1.40.3 Power Generation Bases

(1) Limit the maximum ambient temperature in the diesel generator rooms.

(2) Limit the maximum ambient temperature in the oil storage rooms and the oil day tank rooms.

(3) Provide capability in the main control room to control and operate various components of the diesel generator room ventilation system manually from the main control room.

7.1.2.1.41 Shutdown Service Water Pump Room Cooling System Instrumentation

The instrumentation and controls for this system meet the design bases listed in the following;

7.1.2.1.41.1 Safety Design Bases

(1) The system limits SSW pump room maximum ambient temperature.

(2) Loss of offsite electric power does not affect the normal functioning of controls and instrumentation.

(3) The physical events accompanying a loss-of-coolant or fuel handling accident do not prevent correct functioning of the controls and instrumentation.

(4) Seismic motions resulting from earthquake ground motion, missile and flood do not impair the operation of the controls and instrumentation.

(5) The applicable requirements of the following standards are met by the SSW Pump Room Cooling system instrumentation and controls: IEEE Standards 279, 308, 323, 336, 338, 344 and 384. Additionally, General Design Criterion 13, of 10 CFR 50, Appendix A, has been implemented in the design of the control system.

7.1.2.1.41.2 Specific Regulatory Requirements

Specific regulatory requirements applicable to this system are listed in Table 7.1-3.

7.1.2.1.41.3 Power Generation Design Bases

(1) Limit the maximum ambient temperature in the SSW pump rooms.

(2) Provide capability in the main control room to control and operate various components of the SSW pump room cooling system manually from the main control room.

7.1.2.1.42 Essential Switchgear Heat Removal HVAC System Instrumentation and Controls

The instrumentation and controls for this system meet the following design bases listed in the following.

7.1.2.1.42.1 Safety Design Bases

(1) The cooling equipment and controls provided for each ESF switchgear room, cable spreading room, battery room and inverter room, provide removal of heat generated by the electrical equipment located in the respective areas.

(2) The battery room ventilation system prevents accumulation of hydrogen gas generated during charging of batteries.

(3) Loss of offsite electric power does not affect the normal functioning of controls and instrumentation.

(4) The physical events accompanying a loss-of-coolant or fuel handling accident do not prevent correct functioning of the controls and instrumentation.

(5) Seismic motions resulting from earthquake ground motion, missile, wind and flood do not impair the operation of the controls and instrumentation.

(6) The requirements of IEEE Standards 279, 308, 323, 336, 338, 344 and 384 are met by the ventilation systems instrumentation and controls. Additionally, General Design Criterion 13, of 10 CFR 50, Appendix A, has been implemented in the design of these control systems.

7.1.2.1.42.2 Specific Regulatory Requirements

Specific regulatory requirements applicable to this system are listed in Table 7.1-3.

7.1.2.1.42.3 Power Generation Design Bases

(1) Limit the maximum ambient temperature of the various areas served by the essential switchgear heat removal systems (identified in Section 9.4) as stated in Table 3.11-5.

(2) Provide capability in the main control room to control and operate various components of these ventilation systems.

7.1.2.1.43 ECCS Equipment Room HVAC System - Instrumentation and Controls

The instrumentation and controls for this system meet the design bases listed in the following.

7.1.2.1.43.1 Safety Design Bases

(1) The system prevents a rise in ECCS equipment cubicle ambient temperature above the set point during ECCS equipment operation.

(2) Loss of offsite electric power does not affect the normal functioning of controls and instrumentation.

(3) The physical events accompanying a loss-of-coolant or fuel handling accident do not prevent correct functioning of the controls and instrumentation.

(4) Seismic motions resulting from earthquake ground motion, missile, wind and flood do not impair the operation of the controls and instrumentation.

(5) The requirements of IEEE Standards 279, 308, 323, 336, 338, 344 and 384 are met by the emergency core cooling system instrumentation and controls. Additionally, General Design Criterion 13, of 10 CFR 50, Appendix A, has been implemented in the design of the control system.

7.1.2.1.43.2 Specific Regulatory Requirements

Specific regulatory requirements applicable to this system are listed in Table 7.1-3.

7.1.2.1.43.3 Power Generation Design Bases

(1) Limit the maximum ambient temperature of the ECCS equipment cubicles when ECCS equipment is operating.

(2) Provide capability in the main control room to control and operate various ventilation components of the ECCS equipment cubicles.

7.1.2.1.44 Auxiliary Building HVAC System Instrumentation and Controls

The instrumentation and controls for this system meet the design bases listed in the following.

7.1.2.1.44.1 Safety Design Bases

The instrumentation and controls provided for the auxiliary building HVAC system are not required to function in any but normal station operating conditions and, therefore, have no safety design bases.

7.1.2.1.44.2 Specific Regulatory Requirements

Specific regulatory requirements applicable to this system are listed in Table 7.1-3.

7.1.2.1.44.3 Power Generation Design Bases

(1) Limit the maximum ambient temperature in the areas of the auxiliary and control buildings in accordance with equipment ambient temperature requirements, stated in Table 3.11-5.

(2) Instrumentation and control systems provided for HVAC systems are non-redundant.

7.1.2.1.45 Fuel Building HVAC System Instrumentation and Controls

7.1.2.1.45.1 Safety Design Bases

(1) The fuel building HVAC instrumentation and controls are non-safety related, except for the fuel building isolation dampers and the duct work between them. Hence, these instruments (excluding the isolation damper control devices) are not required to function in any but normal station operating conditions.

(2) The ventilation supply and exhaust ducts are provided with redundant isolation dampers at the fuel building boundary wall to automatically isolate the fuel building HVAC system on receipt of a signal that is indicative of a loss of coolant or fuel handling accident.

(3) During system isolation, the standby gas treatment system maintains a negative pressure within the fuel building.

(4) Radiation monitors are located in the main exhaust air duct, which exhausts air from the fuel building. A high radiation signal actuates an alarm in the main control room. A high radiation signal automatically isolates the fuel building HVAC system and starts the standby gas treatment system. Radiation monitors are describe in Subsection 7.6.1.2.4.

7.1.2.1.45.2 Specific Regulatory Requirements

Specific conformance of the instrumentation and controls to the General Design Criteria of 10 CFR 50, Appendix A, does not apply.

7.1.2.1.45.3 Power Generation Design Basis

(1) Limit the maximum ambient temperature in accessible areas and in potentially contaminated cubicles in accordance with equipment ambient temperature requirements, stated in Table 3.11-5.

(2) Instrument and control systems provided by HVAC Systems are non-redundant.

7.1.2.1.46 Feedwater Leakage Control Mode (FWLC) - Instrumentation and Controls

7.1.2.1.46.1 Safety Design Basis

(1) Safety related instrumentation and controls are provided to allow the reactor operator to manually inititate the feedwater leakage control mode of the RHR system. The FWLC controls are provided in the main control room with permissives to prevent overpressurization of the RHR system from the feedwater lines.

(2) Status of the required containment isolation valve position is indicated in the main control room.

(3) Inoperable conditions of the mode are annunciated in the main control room.

7.1.2.1.46.2 Specific Regulatory Requirements

The specific requirements applicable to the feedwater leakage control mode are shown in Table 7.1-3.

7.1.2.1.46.3 Power Generation Basis

There is no power generation design basis for this mode.

7.1.2.2 Independence of Redundant Safety-Related Systems

7.1.2.2.1 Introduction

This section defines separation criteria for safety-related mechanical and electrical equipment. Safety-related equipment to which the criteria apply are those necessary to mitigate the effects of anticipated and abnormal operational transients or design basis accidents. The objective of the criteria is to delineate the separation requirements necessary to achieve true independence of safety-related functions compatible with the redundant equipment provided.

The following Subsections individually address mechanical and electrical equipment separation. The specific systems and equipment to which the criteria apply are listed followed by the corresponding safety criteria.

7.1.2.2.2 Mechanical Systems and Equipment

The affected mechanical systems and related equipment (i.e., piping, valves, pumps, and heat exchangers) include the systems listed in the following.

7.1.2.2.2.1 Emergency Core Cooling Systems (ECCS)

(1) Low-pressure coolant injection (LPCI) system (Subsystem of RHR).

(2) Low-pressure core spray (LPCS) system.

(3) High-pressure core spray (HPCS) system.

(4) Automatic depressurization system (ADS).

7.1.2.2.2.2 Other Cooling Systems

(1) Reactor core isolation cooling (RCIC) system.

(2) Shutdown service water system.

(3) RHR - containment spray cooling system.

(4) RHR - reactor shutdown cooling system.

(5) RHR - suppression pool cooling.

7.1.2.2.2.3 Containment System

The overall complex of equipment, devices, valves, pumps, piping, and manual control involved in generating the following systems function:

(1) Containment isolation control systems.

7.1.2.2.2.4 Engineered Safety Feature Systems

(1) Combustible gas control system.

(2) Standby gas treatment system (SGTS).

(3) Suppression pool makeup system.

(4) Main control room HVAC.

The criteria for separation of mechanical systems and equipment are discussed in Section 3.6.

7.1.2.2.3 Electrical Systems and Equipment

The following mechanical and electrical systems and equipment (including supporting systems) are necessary to assure proper plant-wide, total operating spectrum safety functions protection. Refer to Chapter 15 Appendix A for total plant safety evaluation.

7.1.2.2.3.1 Reactor Protection (Trip) System (RPS)

The overall complex of equipment, devices, piping, instrument channels, power supplies, trip systems, trip actuators and all wiring involved in generating a reactor scram trip signal.

7.1.2.2.3.2 Containment and Reactor Vessel Isolation Control System (CRVICS)

The overall complex of instrument channels (except those common to RPS), power supplies, trip systems, manual controls and interconnecting wiring involved in generating a CRVICS function. Instrument channels for the isolation functions which are shared with the reactor protection system are considered a part of the RPS as far as segregation is concerned.

7.1.2.2.3.3 Emergency Core Cooling System (ECCS)

The overall complex of equipment, devices, valves, pumps, piping, instrument channels, power supplies, trip systems, manual control and interconnecting wiring involved in generating a ECCS function.

The ECCS includes that combination of systems which take automatic action to provide the cooling water necessary to limit fuel cladding temperature and maintain a coolable core geometry in the event of any design basis accident. The included systems are:

(1) Low Pressure Core Spray (LPCS) System,

(2) Automatic Depressurization System (ADS),

(3) High Pressure Core Spray (HPCS) System

(4) The Low Pressure Coolant Injection (LPCI) mode of Residual Heat Removal (RHR) System.

7.1.2.2.3.4 Other Cooling Water Systems

The overall complex of equipment, devices, valves, pumps, piping, motors, instrument channels, power supplies, trip systems, manual control and interconnecting wiring involved in generating the following system functions:

(1) RCIC system

(2) Shutdown Service Water system

(3) Containment Spray Cooling mode of RHR system

(4) Reactor Shutdown Cooling mode of RHR system

(5) Suppression Pool Cooling mode of RHR system

7.1.2.2.3.5 Containment System

The overall complex of equipment, devices, valves, pumps, piping, motors, instrument channels, power supplies, trip systems, manual control and interconnecting wiring involved in isolating the containment during various transient, upset, and accident conditions generating the following system function:

(1) Containment Isolation Control Systems

7.1.2.2.3.6 Emergency Power System

The overall complex of equipment, devices, diesel generators, breakers, batteries, inverters, controls and interconnecting cabling involved in the following Emergency Power Systems:

(1) Standby AC Power Systems

(2) Emergency DC Power Systems

7.1.2.2.3.7 Engineered Safety Feature - Auxiliary Systems

The overall complex of equipment, devices, valves, pumps, piping, resistors, instrument channels, power supplies, trip systems, manual control and interconnecting wiring involved in generating the following system functions:

(1) Combustible Gas Control System

(2) Standby Gas Treatment System

(3) Fuel Pool Cooling System

(4) Main Control Room HVAC System

(5) Suppression Pool Makeup System

(6) ECCS Cubicle HVAC

7.1.2.2.4 Mechanical Systems Separation Criteria

7.1.2.2.4.1 General

(1) Separation of the affected mechanical systems and equipment (Subsection 7.1.2.2.2) is accomplished so that the substance and intent of the General Design Criteria of 10 CFR 50 Appendix A are fulfilled.

(2) Consideration is given to the redundant and diverse requirements of the affected systems.

(3) Consideration is given to the type, size, and orientation of possible breaks of the reactor coolant pressure boundary specified in Subsection 3.6.2.2.

(4) The protection afforded by the safety related network satisfies the single active component failure criterion. A single active component failure is an occurrence which results in the loss of capability of a component to perform its intended safety functions. Multiple failures resulting from a single occurrence are considered to be part of the single failure. Fluid systems are considered to be designed against an assumed single failure if a single failure of any active component (assuming passive components function properly) does not result in a loss of capability of the system to perform its safety function.

(5) Redundant systems are separated so that single failure of a component or channel will not interfere with the proper operation of its redundant/diverse counterpart.

(6) The affected mechanical systems and equipment are separated so that systems important to safety are protected from the following hazards:

a. The pipe break dynamic effects outlined in Section 3.6

b. Environmental effects as a result of pipe breaks and as outlined in Section 3.11

c. Flooding effects as a result of pipe breaks and as outlined in Section 3.4

d. Missiles as defined in Section 3.5

e. Fires capable of damaging redundant mechanical safety equipment as discussed in Section 9.5.

(7) The need for and adequacy of separation to protect the safety equipment from the above hazards is determined in conjunction with the criteria specified in Sections 3.4, 3.5, 3.6, 3.11, and 9.5.

7.1.2.2.4.1.1 Separation Techniques

The methods used to protect redundant safety systems from the above hazards fall into three categories of separation techniques: plant arrangement, barriers, and spatial separation.

a. Plant Arrangement

A basic design consideration of plant layout is that redundant divisions of a safety system should not share common equipment areas. However, equipment common to a particular safety system division can share a common area if that equipment does not constitute a hazard within itself to another safety system of the same division.

As an example, failure of a safety related pipe in Division I should not result in a failure of a pipe in Division II and vice versa.

Failure of any nonsafety related structure, system, or component shall not result in failure of any safety related structure, system, or component.

To accomplish separation through plant arrangement, redundant divisions of a safety system are placed in different compartments or even on different elevations. Nonsafety equipment, components, or piping are not run above safety equipment unless they are adequately restrained or it can be demonstrated that failure will not impair function of the safety equipment. Safety related components or devices are placed in Seismic Category I structure buildings unless it can be demonstrated that failure will not impair function of the safety equipment.

b. Barriers

Barriers are used in restricted areas where a particular hazard (eg., small turbine missiles) is more easily identified or where other techniques are inappropriate (eg., separation between control boards). Separation by barriers is an extension of separation by the use of compartments in plant arrangement. Separation was also accomplished through the use of suitably designed equipment that in itself acts as a barrier. Examples would be heavily constructed control boards or heavy wall conduits and enclosed cable trays. In many cases, the barrier may enclose the hazard (eg., a compartment around a high speed turbine driven pump) in lieu of effecting a direct separation between redundant systems.

Electronic optical isolators are used where it becomes necessary to pass signals through such barriers.

c. Spatial Separation

Spatial separation is another method of separating redundant safety systems and protecting them from the hazards described in Subsection 7.1.2.2.4.1(6).

7.1.2.2.4.2 System Separation

Piping for a redundant safety system is run independently of its counterparts, unless it can be shown that no single credible event, eg., LOCA, is capable of causing piping failure that could prevent reactor shutdown. Supports and restraints of redundant mechanical components and piping are not shared, unless such sharing does not significantly impair their ability to perform their safety function.

Penetrations of the containment are separated or other adequate provisions are made so that the initial break of one piping branch of a system does not render its redundant counterpart(s) inoperable.

7.1.2.2.4.3 Physical Separation

(1) Mechanical equipment and piping, are separated from each other so that single failure of a device or component will not interfere with the proper operation of its redundant/diverse counterpart.

(2) The ADS system is separated from the HPCS system such that no break location within the normally pressurized portion of the HPCS influent line can damage any component considered essential to the operation of the ADS.

(3) The coolant injection portions of the ECCS are separated into the following functional groups:

a. HPCS with shutdown service water.

b. One ADS + LPCS + 1 LPCI with RHR heat exchanger and shutdown service water.

c. One ADS + 2 LPCI with one RHR heat exchanger and shutdown service water.

(4) The equipment in each group is separated from that in the other two groups. In addition, the HPCS and the RCIC are separated within the Fuel Building, Auxiliary Building, and Containment.

(5) Separation barriers are constructed between the functional groups as required to assure the environmental disturbances (such as fire, flood, pipe rupture phenomena, falling objects, etc.) affecting one functional group will not affect the remaining groups. In addition, separation barriers are provided as required to assure that such disturbances do not affect both the RCIC and HPCS systems within the Fuel Building, Auxiliary Building, and Containment.

7.1.2.2.5 Electrical Systems Separation Criteria

7.1.2.2.5.1 General

For general plant criteria, see Subsections 8.3.1 and 8.3.2.

7.1.2.2.5.2 System Separation Requirements

Redundant sensory equipment for nuclear safety-related systems is identified by suffix letters in accordance with Table 7.1-10. This table also shows the allocation of sensors to their separated divisions.

7.1.2.2.5.2.1 Reactor Protection System (RPS)

The following separation requirements shall apply to the RPS wiring.

a. RPS has its sensors (input signals) arranged in four divisionally separated groups designated Divisions 1, 2, 3, and 4 and providing inputs to four corresponding divisionally separated logic cabinets.

b. The outputs from the RPS cabinets to each of the four scram groups are run in conduit and/or armored cable. All RPS ("Fail Safe") circuit cables are run in grounded conduits. The RPS cables are separated in accordance with Subsection 8.3.1.4.2.1.3.

c. Redundant trips for reactor recirculation pump motors may obtain inputs from the RPS logic circuits, maintaining divisional separation and divisional to nondivisional electrical isolation and/or physical separation as necessary considering the nondivisional recirculation pump motor power.

d. The Standby Liquid Control System redundant Class 1E controls are run as Division 1 and Division 2 such that no failure of SLC function will result from a single electrical failure in RPS circuits.

e. The Neutron Monitoring System Cabling and Rod Control and Information System (RCIS) cabling under the vessel are treated as divisional. The NMS cables are assigned to Divisions 1, 2, 3, and 4 and the RCIS cables to Divisions 1 and 2. Under-vessel cabling is not subject to external fires. However, these cables must be protected from mechanical damage. Flexible conduits are provided for the cable run between the cable trays and cable support structure to prevent mechanical damage. The cable run between the cable support structure and the vessel flange is through an area where no source of mechanical damage to these cables exists. Therefore, conduit is not required nor is provided in this area.

   Since there is no fire and mechanical damage potential existing in the under-vessel area, the damage potential is limited to failures or faults internal to the circuits only. These are low level information circuits and the cable insulation is adequate to provide sufficient separation between redundant circuits.

f. The NMS wires (input to RPS) are run in raceway which contain only NMS wires. Neutron Monitoring System (IRM, SRM, and APRM) conduits may be run in a raceway containing other wires of the same divisional separation identification.

g. Cables through the primary containment penetrations are so grouped that failure of all cabling in a single penetration cannot prevent a scram. (This applies specifically to the neutron monitoring cables and the main steam isolation valve position switch cables.)

h. Power supplies to systems which deenergize to operate (so called "fail-safe" power supplies) are routed in accordance with Subsection 8.3.1.4.2.2.

7.1.2.2.5.2.2 Containment and Reactor Vessel Isolation Control System (CRVICS)

The inboard and outboard CRVICS valves are mutually redundant and are independent of each other and of other influences to the extent that no single failure can prevent operation of at least one of an inboard/outboard pair of valves. Isolation valves control and power circuits are protected from the pipelines that they are responsible for isolating. All inboard and outboard isolation valve wiring are routed so as to take advantage of the mechanical protection afforded by the valve operator or other available structural barriers not susceptible to disabling damage from the pipeline break. Additional mechanical protection (barriers) are interposed between wiring and potential sources of disabling mechanical damage consequential to a break downstream of the valve. The following requirements shall apply to the inboard and outboard main steam isolation valves (MSIV).

(1) The inboard and outboard MSIV have four divisionally separated group of sensor inputs designated Divisions 1, 2, 3, and 4 and providing inputs to corresponding divisionally separated logic panels.

(2) The inboard/outboard isolation valves are backups for each other, so they must be independent of and protected from each other to the extent that no single failure can prevent the operation of at least one of an inboard/outboard pair of shutoff valves.

(3) Isolation valve circuits require special attention because of their function in limiting the consequences of a pipe break outside the primary containment. Isolation valve control and power circuits shall be protected from the pipelines that they are responsible for isolating as follows:

a. Essenial isolation valve wiring in the vicinity of the outboard valve (or downstream of the valve) is run in conduit and routed to take advantage of the mechanical protection afforded by the valve operator or other available structural barriers not susceptible to disabling damage from the pipe line break. Additional mechanical protection (barriers) is interposed as necessary between wiring and potential sources of disabling mechanical damage consequential to a break downstream of the outboard valve.

b. Motor-operated valves which have mechanical check valve backup for their isolation function are included in the division which embraces the system in which the valves are located rather than adhering strictly to the

inboard/outboard divisional classification. The testable check valve cable is run in same division with the cables for the motor-operated valve in the same line.

7.1.2.2.5.2.3 Emergency Core Cooling Systems (ECCS)

The systems comprising the ECCS have their various sensors, logics, actuating devices, and power supplies assigned to divisions in accordance with Table 7.1-10. The wiring to the ADS solenoid valves within the drywell shall run in one or more conduits. ADS conduit(s) for solenoid "A" shall be divisionally separated from solenoid "B" conduit(s). Short pieces of flexible conduit may be used in the vicinity of the valve solenoids.

7.1.2.2.5.2.4 Other Separation Considerations

(1) Steam Leakage Zone. Class 1E Electrical equipment and raceways avoid location in a steam leakage zone insofar as practical or are designed for short term exposure to the high temperature and humidity associated with a steam leak.

(2) Suppression Pool Level Swell Zone. Any electrical equipment and/or raceways for RPS and ESF equipment located in this zone are designed to satisfactorily complete their function before being rendered inoperable due to exposure to the environment created by the swell.

(3) Non-Class 1E Instrumentation on Class 1E Motors. Where non-Class 1E instruments such as thermocouples or RTD's are used on 1E motors, the non-1E instrument cables shall not occupy the same termination compartment as the 1E power or control wiring. In the event that separation cannot be maintained, analyses may be used to justify lesser separation.

(4) Main Control Room panel separation is achieved as follows:

a. Two adjacent panels containing circuits of different separation divisions are separated by at least 1 foot or there is a steel barrier between the two panels. Panel ends closed by steel end plates are considered to be acceptable barriers provided that terminal boards and wireways are spaced a minimum of one inch from the end plate.

b. Panel-to-floor fireproof barriers are provided between adjacent panels of different divisions, and divisional equipment on the same panel.

c. Penetration of separation barriers within a subdivided panel is permitted, provided that such penetrations are sealed or otherwise treated so that a fire generated by electrical fault could not reasonably propagate from one section to the other and disable a protective function.

d. Where, for operational reasons, locating manual control switches on separate panels is considered to be prohibitively (or unduly) restrictive to manual operation of equipment, the switches may be located on the same panel provided no credible single event in the panel can disable both sets of redundant manual or automatic controls. Wherever wiring of two

different divisions exists in a single panel section, spacing of terminal boards and wiring is such as to preclude the possibility of fire propagation from one division of wiring to another. One of a redundant pair of devices in close proximity (less than 6 inches) within a single panel will be considered adequately separated from the other if the wiring to one of the devices has flame-retardant insulation and is totally enclosed in fire resistant material and wiring routed in conduit at least to a point where 6 inch separation is again attained. However, consideration shall be given to locating redundant switches on opposite sides of the barrier formed by the end closures of adjacent panels wherever operationally acceptable. For the use of flexible conduit in PGCC panels, see Subsection 8.3.1.4.5.5.

(5) NSSS Isolation Devices.

Where electrical interfaces between Class 1E (or associated Class 1E) and non-Class 1E circuits, or between Class 1E (or associated Class 1E) circuits of different divisions cannot be avoided, isolation devices are used, except where justified by analysis.

Non-Class 1E power circuits are separated and isolated from all Class 1E associated circuits and from all Class 1E circuits. In addition, non-Class 1E instrument and control circuits are not energized from a Class 1E power supply unless potential for degradation of the Class 1E power source can be demonstrated to be negligible by effective current or voltage limiting (i.e., functional isolation) under all design basis conditions. Class 1E power supplies which interface non-Class 1E circuits are required to be decoupled from the non-Class 1E circuits when conditions of the non-Class 1E portion of the system can jeopardize the Class 1E portions. Finally Class 1E circuits which interface non-Class 1E power supplies are decoupled from the non-Class 1E power supplies when conditions of the non-Class 1E portion of the system can jeopardize the Class 1E portion. This decoupling device (typically a circuit breaker tripped by accident signal, or current- or voltage-limiting device or a combination thereof) are Class 1E.

Wiring from Class 1E (or associated to Class 1E) equipment or circuits which interface with non-Class 1E equipment circuits (i.e., annunciators or data loggers) shall be treated as Class 1E (or associated Class 1E) and retain its divisional identification up to and including its isolation device. The output circuits from this isolation device shall be classified as non-divisional and shall be physically separated from the divisional (or associated to Class 1E) wiring.

7.1.2.3 Physical Identification of Safety-Related Equipment

The physical identification of equipment associated with the RPS, CRVICS, ECCS and their auxiliary supporting systems is described in Sections 7.1.2.2.2 and 7.1.2.2.3.

7.1.2.4 Instrument Errors

The design considers instrument drift, setability and repeatability in the selection of instrumentation and controls and in the determination of setpoints. Adequate margin between

safety limits and instrument setpoints is provided to allow for instrument error. CRVICS safety limits, setpoints, and margins are listed in the CPS Technical Specifications and Operational Requirements Manual (ORM). The amount of instrument error is determined by test and experience. The setpoint is selected based on the known error. The test frequency is greater on instrumentation that demonstrates a tendency to drift (see subsection 7.1.2.6.25).

7.1.2.5 Conformance to Industry Standards

7.1.2.5.1 Conformance to IEEE 279

This discussion is presented on a system-by-system basis in the analysis portions of Sections 7.2, 7.3, 7.4, 7.6, and 7.7. (Design compliance of the PGCC is discussed in Section 4.1.1 of GE Topical Report NEDO-10466A, "Power Generation Control Complex.")

7.1.2.5.2 Conformance to IEEE 308

Conformance to IEEE 308 as described in Section 8.3 is applicable to safety-related instrumentation and control equipment.

7.1.2.5.3 Conformance to IEEE 317

Refer to Subsection 8.1.6.2.3.

7.1.2.5.4 Conformance to IEEE 323

Compliance with IEEE 323, "General Guide for Qualifying Class I Electric Equipment for Nuclear Power Generating Stations," is met by written procedures and responsibilities developed for the design and qualification of all Class 1E electric equipment. This includes preparation of specifications, qualification procedures, and documentation. Whenever possible, qualification testing or analysis is accomplished prior to release of the engineering design for production. Standards manuals are maintained containing specifications, practices, and procedures for implementing qualification requirements, and an auditable file of qualification documents is available for review.

7.1.2.5.5 Conformance to IEEE 336

The IEEE 336 requirements for installation, inspection and testing of Class 1E instrument and control equipment and systems during construction have been met through a quality assurance program. Conformance to IEEE 336-1971 (ANSI N45.2.4-1972) is discussed in conjunction with Regulatory Guide 1.30. Refer to USAR Section 1.8.

Specifications include requirements for conformance to IEEE 336.

7.1.2.5.6 Conformance to IEEE 338

This discussion is presented on a system by system basis in the analysis portions of Sections 7.2, 7.3, 7.4, and 7.6.

7.1.2.5.7 Conformance to IEEE 344

All safety-related instrumentation and control equipment is classified as Seismic Category I, designed to withstand the effects of the safe shutdown earthquake (SSE) and remain functional

during normal and accident conditions. Qualification and documentation procedures used for Seismic Category I equipment and systems meet the provisions of IEEE 344 as identified in Section 3.10.

7.1.2.5.8 Conformance to IEEE 379

The extent to which the single failure criteria of IEEE 379 is satisfied is specifically covered for each system in the analysis of IEEE 279, Paragraph 4.2 - see Section 7.1.2.5.1 above.

7.1.2.5.9 Conformance to IEEE 384

The safety-related systems described in Sections 7.2, 7.3, 7.4, and 7.6 meet the independence and separation criteria for redundant systems in accordance with IEEE 384. See Subsection 7.1.2.6.19 for conformance to Regulatory Guide 1.75.

The criteria and bases for the independence of redundant electrical cable, including routing, marking and cable derating, are covered in Section 8.3, Subsection 7.1.2.2.5.2.4, and in GE topical Report NEDO-10466-A, "Power Generation Control Complex." Fire detection and protection in the areas where wiring is installed are covered in Subsections 8.3.3 and 9.5.1.

7.1.2.5.10 Conformance to IEEE 387

Design and qualification testing of the standby power system used to furnish electrical power to safety loads conforms to IEEE 387 to ensure that system requirements for redundancy, single failure criteria, adequate capacity, capability and reliability are adequately met. The standby power source as an integrated system component satisfies the requirements of IEEE 308 as discussed in Section 8.3.

7.1.2.6 Conformance to Regulatory Guides

7.1.2.6.1 Conformance to Regulatory Guide 1.6

Independence is maintained between redundant standby (onsite) sources and between their distribution systems in compliance with Regulatory Guide 1.6. Further discussion is presented in Section 8.3.

7.1.2.6.2 Conformance to Regulatory Guide 1.9

The HPCS diesel is selected to a different requirement than Regulatory Guide 1.9. Further discussion is presented in Subsection 8.3.1.2.2.

7.1.2.6.3 Conformance to Regulatory Guide 1.11

All instrument sensing lines penetrating or connected to primary reactor containment, which are part of the protection system, meet the requirements of regulatory position C.1 of Regulatory Guide 1.11, with the exceptions stated in Section 1.8.

All other instrument sensing lines that penetrate primary reactor containment or are connected directly to the containment atmosphere meet regulatory position C.2 of Regulatory Guide 1.11, with the exceptions stated in Section 1.8.

7.1.2.6.4 Conformance to Regulatory Guide 1.21

Conformance of systems provided to measure effluents from the nuclear power plant is discussed in Subsection 7.7.2.

7.1.2.6.5 Conformance to Regulatory Guide 1.22

This discussion is presented for applicable systems in the Analysis portion of Sections 7.2, 7.3, 7.4, and 7.6.

7.1.2.6.6 Conformance to Regulatory Guide 1.29

The instrumentation and control equipment required to meet Seismic Class I by Regulatory Guide 1.29 is identified in Chapter 3, Table 3.2-1.

7.1.2.6.7 Conformance to Regulatory Guide 1.30

The requirements for installation, inspection, and testing included in ANSI N45.2.4 (IEEE 336) have been implemented during the construction phase. Conformance to IEEE 336-1971 (ANSI N45.2.4-1972) is discussed in conjunction with Regulatory Guide 1.30. Refer to USAR Section 1.8.

7.1.2.6.8 Conformance to Regulatory Guide 1.32

The ECCS and auxiliary system instrumentation and controls are designed to the requirements of Regulatory Guide 1.32 and IEEE Standard 308. Section 7.3 provides discussion of compliance.

7.1.2.6.9 Conformance to Regulatory Guide 1.40

There are no continuous duty motors installed inside the containment that are part of the instrumentation and control systems.

7.1.2.6.10 Not Used

7.1.2.6.11 Conformance to Regulatory Guide 1.47

The system of bypass indication is designed to satisfy the requirement of IEEE 279 Paragraph 4.13 and Regulatory Guide 1.47 and is discussed for each safety-related system, as applicable, under Sections 7.2, 7.3, 7.4, and 7.6. The design of the bypass indication system allows testing during normal operation and is used to supplement administrative procedures by providing indications of safety systems status.

The bypass indication system is designed and installed in a manner which precludes the possibility of adverse affects on the plant safety system. Those portions of the bypass indication system which when faulted could reduce the independence between redundant safety systems are electrically isolated from the protection circuits. Table 7.1-15 shows system bypass and inoperable status indication for the NSSS scope of supply. This table compiles the information which indicates the design philosophy and shows compliance with Regulatory Guide 1.47 for the NSSS. The philosophy for the design of bypass and inoperable status indication for

the BOP nuclear safety-related systems is the same as that used for the NSSS. The NSSS Criteria for bypassed and inoperable status indication is as follows:

Automatic indication should be provided in the control room to indicate the following:

1. Bypass that renders the system out-of-service.

2. Bypass of an auxiliary or supporting system that effectively passes or renders inoperative the safety system.

3. Bypass of redundant portions or process control components of the safety system.

4. Actuation of the manual bypass of a system or portion or a system.

The implementation of bypass indication was achieved using the following methods:

1. System level indication for ECCS and RPS systems

2. Indication of train bypass

3. Valve position indication

4. Valve position control override

5. Pump out of service indication

6. Motor-operated valves in-test

7. Trip units in calibration or out-of-file

8. Isolator card out-of-file

9. Process control components inoperative

10. Divisional test indication

11. Manual initiation of bypass initiation

12. Initiation of power failure

Table 7.1-15 lists the NSSS safety system bypasses and inoperative indication which will supplement plant administrative procedures. (Q&R 421.15 & 421.19)

7.1.2.6.12 Conformance to Regulatory Guide 1.53

The safety-related system designs conform to the single failure criterion. The analysis portions of Sections 7.2, 7.3, 7.4 and 7.6 provide further discussion.

7.1.2.6.13 Conformance to Regulatory Guide 1.56

The Reactor Water Cleanup provides the capability to maintain water purity in conformance to Regulatory Guide 1.56. Further discussion is provided in Section 7.7, Subsection 7.7.2.8.

7.1.2.6.14 Conformance to Regulatory Guide 1.62

Manual initiation of the protective action is provided at the system level in the Reactor Protection System, Containment and Reactor Vessel Isolation Control System and Emergency Core Cooling Systems. The analysis portion of Sections 7.2 and 7.3 provide further discussion.

7.1.2.6.15 Conformance to Regulatory Guide 1.63

Conformance with this regulatory guide is discussed in Subsection 8.1.6.1.12.

7.1.2.6.16 Conformance to Regulatory Guide 1.68

Conformance to this regulatory guide is discussed in Chapter 14.

7.1.2.6.17 Conformance to Regulatory Guide 1.70

The format and content of Chapter 7 conform to the requirements of Regulatory Guide 1.70.

7.1.2.6.18 Conformance to Regulatory Guide 1.73

Conformance with this regulatory guide is discussed in Section 8.1.

7.1.2.6.19 Conformance to Regulatory Guide 1.75

The safety-related systems described in Sections 7.2, 7.3, 7.4 and 7.6 meet the independence and separation criteria for redundant systems in accordance with Regulatory Guide 1.75.

Further discussion of compliance with this regulatory guide is provided in Section 8.1. The following exceptions apply to NSSS equipment:

(1) First sentence of IEEE-384 Section 5.8 is implemented as follows:

Redundant Class 1E sensors and their connections to the process system shall be sufficiently separated that required functional capability of the protection system will be maintained despite any single design basis event or result therefrom.

(2) Non-Class 1E instrumentation circuits can be exempted from the provisions of IEEE-384 Section 4.6.2 provided they are not routed in the same raceway as power and control cables or are not routed with associated cables or a redundant division.

Design compliance of the PGCC is discussed in Section 4.0 of GE Topical Report NEDO-10466-A, "Power Generation Control Complex."

7.1.2.6.20 Conformance to Regulatory Guide 1.80

The testing procedures required by this Regulatory Guide are presented in Subsection 14.2.12.

7.1.2.6.21 Conformance to Regulatory Guide 1.89

Qualification of Class 1E equipment is discussed in Chapter 3. The discussion of conformance is presented in Section 3.11.

7.1.2.6.22 Conformance to Regulatory Guide 1.96

The main steam line isolation valve leakage control system is designed to the requirements of Regulatory Guide 1.96. Further discussion is provided in Subsection 7.3.2.3.2.1.9.

7.1.2.6.23 Conformance to Regulatory Guide 1.97

Regulatory Guide 1.97 has been implemented where feasible and practical as listed in Table 7.1-13. The criteria provided has been followed for establishing Category 1, 2 and 3 instruments. The quality assurance requirements for the accident monitoring instrumentation are in compliance with the applicable requirements of 10 CFR 50, Appendix B as described in Chapter 17. In assessing Regulatory Guide 1.97, information has been drawn upon from several applicable documents, including but not limited to the BWROG Position on NRC Regulatory Guide 1.97, ANS 4.5, NUREG/CR-2100, NUREG-0737 Supplement 1, CPS License Amendment No. 155 and the CPS-specific Emergency Procedure Guidelines.

7.1.2.6.24 Conformance to Regulatory Guide 1.100

All Class 1E equipment will meet the requirements of IEEE 344 and will be seismically qualified in conformance with Regulatory Guide 1.100 as discussed in Section 3.10.

7.1.2.6.25 Regulatory Guide 1.105

The Topical Report, NEDC 31336, SETPOINT METHODOLOGY, is General Electric's proprietary implementation position on compliance with Regulatory Guide 1.105.

Trip setpoints (instrument setpoint) and allowable values (technical specification limit) are contained in the Operational Requirements Manual (ORM) and Technical Specifications, respectively. These parameters are all appropriately separated from each other based on instrument accuracy, calibration capability, and design drift (estimated) allowance data. The setpoints are within the instrument accuracy range.

The established setpoints provide margin to satisfy both safety requirements and plant availability objectives.

7.1.2.6.26 Conformance to Regulatory Guide 1.118

The instrumentation and control systems are designed to the requirements of Regulatory Guide 1.118, as discussed in Sections 7.2, 7.3, and 7.7 with the following clarifications of the regulatory guide requirements.

Position 6 - Trip of an associated protective channel or actuation of an associated Class 1E load group is required on removal of fuses or opening of a breaker only for the purpose of deactivating instrumentation or control circuits.

Position C.8.a - Insofar as is practical and safe, response time testing will be performed from sensor inputs (at the sensor input connection for process instruments) to and including the actuated equipment. An exception to this position is that specific sensors for RPS, MSIV isolation, and ECCS actuation instrumentation will not be response time tested as allowed by the Technical Specifications. This allowance was based on Boiling Water Reactor Owners' Group (BWROG) Topical Report NEDO-32291, "System Analyses for Elimination of Selected Response Time Testing Requirements," dated January 1994 and the conditions identified in NRC's safety evaluation dated December 28, 1994. These conditions include:

1. Verification that the generic analyses of NEDO-32291 are applicable to the components.

2. Prior to installation of a new transmitter/switch or following refurbishment of a transmitter/switch (e.g., sensor cell or variable damping components), a hydraulic response time test shall be performed to determine an initial sensor-specific response time value.

3. For transmitters and switches that use capillary tubes, capillary tube testing shall be performed after initial installation and after any maintenance or modification that could damage the lines.

4. Calibration is being done with equipment designed to provide a step function or fast ramp in the process variable.

5. Provisions have been made to ensure that operators and technicians, through an appropriate training program, are aware of the consequences of instrument response time degradation, and applicable procedures have been reviewed and revised as necessary to assure that technicians monitor for response time degradation during the performance of calibrations and functional tests.

6. Surveillance testing procedures have been reviewed and revised as necessary to ensure calibrations and functional tests are being performed in a manner that allows simultaneous monitoring of both the input and output response of units under test.

7. For Rosemount pressure transmitters, CPS is in compliance with the guidelines of Supplement 1 to NRC Bulletin 90-01, "Loss of Fill-Oil in Transmitters Manufactured by Rosemount."

8. For those instruments where the manufacturer recommends periodic response time testing as well as calibration to ensure correct functioning, CPS must ensure that elimination of response time testing is nevertheless acceptable for the particular application involved.

Compliance with these positions is documented in IP letter U-602376 dated January 27, 1995.

7.1.2.7 Regulation Conformance - 10CFR 50 Appendix A

7.1.2.7.1 GDC-1

All systems and components required for safety are subject to record keeping and auditing practices.

7.1.2.7.2 GDC-2

All systems required for safety have been designed to withstand the effects of natural phenomena without loss of capacity to perform their safety functions.

7.1.2.7.3 GDC-3

All systems and components required for safety have been designed and are to be located to minimize the probability and effect of fires and explosions. Materials that are heat resistant and noncombustible have been chosen whenever practical. A detailed discussion of design compliance for the PGCC is in Section 4.1.2 of GE Topical Report, Power Generation Control Complex, NEDO-10466.

7.1.2.7.4 GDC-4

All systems and components required for safety have been designed to accommodate the effects of and be compatible with the environmental conditions associated with normal operations, maintenance, testing, and postulated accidents, including LOCA. These systems and components are to be appropriately protected against dynamic events such as missiles and pipe whip.

7.1.2.7.5 GDC-5

Systems and components required for safety are not shared with any other nuclear power unit.

7.1.2.7.6 GDC-19

Controls and instrumentation are provided in the main control room. Capability for reactor shutdown outside the main control room is provided in the Remote Shutdown System and its accompanying procedures (Section 7.4).

7.1.2.7.7 GDC-29

All systems and components required for safety have been designed to assure an extremely high probability of accomplishing their safety function in the event of anticipated operational occurrences. This is accomplished through the use of redundant Class 1E-qualified equipment.

7.1.2.7.8 GDC-30

The only I&C equipment to which this GDC is applicable is the condensing chambers and instrument lines within the RPB (i.e., upstream of the root values). These are quality group A or B as appropriate. Reactor coolant leakage is monitored by the Leak Detection System (Section 7.6).

7.1.2.7.9 GDC-33

A system for control of the reactor coolant makeup for protection against small breaks in the reactor coolant pressure boundary is provided via the Feedwater Control System for normal operating conditions as described in Section 7.7. Safety grade emergency systems provide redundancy with feedwater control and with each other in the Emergency Core Cooling System (ECCS).

7.1.2.8 Technical Design Bases

The technical design bases for RPS are in Section 7.2.1, for engineered safety features in Section 7.3.1, for systems required for safe shutdown in Section 7.4.1, and for other systems required for safety in Section 7.6.1.

7.1.2.9 Safety System Setpoints

Safety system setpoints are listed in the Operational Requirements Manual for each safety system. The setpoints are determined based on operating experience and conservative analyses. The setpoints are high enough to preclude inadvertent initiation of the safety action, but low enough to assure that significant margin is maintained between the actual setpoint and the limiting safety system setpoints. Instrument drift, setability and repeatability are considered in the setpoint determination (see Subsections 7.1.2.4 and 7.1.2.6.25). The margin between the limiting safety system setpoints and the actual safety limits include consideration of the maximum credible transient in the process being measured.

The periodic test frequency for each variable is determined from experimental data on setpoint drift and from quantitative reliability requirements for each system and its components.

7.1.2.10 Analog Trip System

The analog trip system is a term which describes the hardware implementation of the process trip and testability characteristics of the analog section of NSPS channels. The analog trip system consists of analog trip modules (ATM), card select decoder (CSD), data acquisition and display controllers (DADC) and display and control panels (DCPs), which are arranged as circuit cards in the control panels P661 through P664. The use of these signal processing elements are universal between systems in NSPS (i.e., RPS, ECCS, NS4, etc.). An example of a typical arrangement together with system configuration limits is given in Figure 7.1-7.

7.1.2.10.1 General Description

Each analog trip module (ATM) obtains an analog process monitoring input from a transmitter, compares it to an internal reference level and provides a maximum of three trip outputs, an analog signal out for display, and a gross fail indication signal (i.e., for either of high or low signal failure).

The ATM consists of two sections, the transmitter section and the trip section, which are electrically isolated from one another at all interfaces which prevents 2500-volt fault propagation protection from loop power supply terminal to backplane through the ATM.

The transmitter section supplies a voltage, current or temperature interface with the transmitter and receives a 4-20 ma input which is signal conditioned to exclude potential sources of noise.

The remote analog transmitter unit which is powered from a 24-volt power supply in the transmitter section provides the loop input signal through the isolation barrier. Test pulses from the self test system (STS) and calibration current are injected into the trans-mitter section at this point.

The trip section is designed to compare a signal level proportional to the input signal level against predetermined reference levels and provide the trip outputs to NSPS logic circuits and to provide the gross fail indication and analog output signals. Trip outputs may be upscale or downscale. Status indications are visible on the front of the cards. Reference levels are adjustable from the front of the card and backplane programming is used to eliminate operator error in setting test pulse priority and trip output configuration.

The card select decoder (CSD) takes analog information from up to 12 ATMs, provides calibration capability for the ATMs and an interface for process and calibration data to the data acquisition and display controller (DADC). Such data can be stored and/or manipulated in the data acquisition and display controller, which, through keyboard control located in the display and control panel (DCP) provides display selection for process and calibration variables. The ATM panel can operate in three modes:

Random Monitor Mode:

- Monitor any ATM transmitter signal among 4 divisions
- Turn on monitor indicator on ATM front panel for confirmation identification of the selected module
- Real-time display
- Simultaneously display any 2 ATM signals
- Provide % of full scale and engineering unit display format

Monitor Compare Mode:

- Simultaneously display the same field parameter from the 4 divisions for comparison
- Provide % of full scale and engineering unit display format
- Real-time display and data update
- Turn on monitor indicator on ATM front panel for confirmation identification of the selected modules

Calibration Mode:

- Operation is limited to the resident division
- Select system and ATM to be calibrated
- Option for zero and gain adjustment on selected ATM

- Provide simulated transmitter signal to the selected ATM for trip level and hysteresis adjustment
- Provide reference signal for verifying the accuracy of the calibration system
- Provision to measure impedance of the selected ATM input for detecting malfunction of transmitter signal simulation bus

The ATM, CSD, DADC, and DCP are tested in accordance with the testability requirements for the NSPS concept and are interrogated by the self test system (STS).

Test pulses injected into the ATM transmitter section propagate through the three trip outputs and the analog level outputs and emerge from the DADC for comparison by the STS. The pulse testing proceeds automatically, signal path by signal path. It takes thirty minutes to test each division. The pulse test changes the trip output state of an untripped condition independently of the trip set points but is designed not to interfere with the aility of the ATM to provide an alarm output in the event of a signal level alarm condition. The STS indicates the location of the fault through a diagnostic terminal.

7.1.2.10.2 Evaluation

The analog trip system is part of the NSPS design concept and is designed to meet the IEEE standards and Regulatory Guides as described for the protection systems covered in the concept; i.e., RPS, NSSS, RHR, LPCS, HPCS, RCIC, ADS, ECCS, NBS, LDS, and NMS.

In particular, it is designed to meet IEEE 323-1974 and IEEE 344-1975. The equipment is located in the non-harsh environment of the control room and is subject to a preventive maintenance program supported by the self test system. It conforms to IEEE 338-1977 and Regulatory Guides 1.22, and 1.118 with one exception. Automatic response time testing is addressed by the use of regular response time measurement as part of the maintenance program, where required by Technical Specifications.

7.1.2.11 Non-NSPS Trip Unit/Calibration System

This subsection describes the equipment and features incorporated in the Trip Unit/Calibration system design to facilitate inservice testability of non-NSPS control, alarm, and interlock functions. For additional testability discussions refer to Topical Report NEDO-21617-A, dated December 1978, "Analog Transmitter/Trip Unit System for Engineered Safeguard Sensor Inputs" as approved by the NRC.

7.1.2.11.1 General Description

The trip unit/calibration system represents a best approach to meet the desires for testability and increased reliability. The trip unit/calibration system is an all solid-state electronic trip system designed to provide highly stable and accurate monitoring of critical process parameters.

The system consists of analog comparator units (ACU) which may be master trip assemblies, or slave trip assemblies. Other accessories include calibration units and card file assemblies. The master trip unit interfaces with a 4-20 ma transmitter located at some remote location within the power plant. The slave trip unit is driven from the analog output of a master trip unit. The

calibration unit has the capability of providing either a stable or transient calibration current that can be routed by a switch to any master unit.

7.1.2.11.2 Evaluation

The master trip unit is a plug-in printed circuit assembly designed to accept a 4-20 ma signal from a remote transmitter. The trip unit contains the circuitry necessary to condition the transmitter current and to provide the desired switching functions and analog output signals. The master trip unit provides energizing current at any point in the 4-20 ma input signal range for testing a particular channel's trip circuitry. The master trip unit also contains a panel meter that displays transmitter current and is scaled in the units of the process variable being measured by the transmitter wired to the master trip unit. A switch position selection internal to the master trip unit allows for selection of either high trip point or low trip point. This allows the testing of trip circuitry for a particular channel with the trip circuitry either energized or deenergized during normal operation. Calibration of the master trip unit is performed by supplying stable and transient input currents of known accuracy. During calibration, the trip action is displayed on Display #2 of the removable display assembly. The accuracy of the analog output of the master trip unit may also be checked during the calibration procedure with an external meter or recorder. A block diagram of the master trip unit is shown in Figure 7.1-8.

The slave trip unit produces an output signal which performs trip function. The slave trip unit is driven by the analog output signal from the master trip unit. There is no direct connection to any 4-20 ma transmitter. No analog output signals are generated by the slave unit. Calibration of the slave unit is accomplished by commanding the master trip unit which drives the slave unit under test into the calibration mode and then performing the normal calibration procedure. A block diagram of the slave trip circuit is shown in Figure 7.1-9.

7.1.2.11.3 Surveillance and Testing

The function of the calibration unit is to furnish the means by which an inplace calibration check of the master and slave trip units can be performed. The calibrator contains a stable current source and a transient current source. Normal use of the stable current is for verification of the calibration point of any given channel. The transient current source is used to provide a step current input into a selected channel. A block diagram of the calibration unit is shown in Figure 7.1-10.

TABLE 7.1-1
SYSTEM IDENTIFICATION AND RESPONSIBILITY

SYSTEM	DESIGNER	SUPPLIER
Reactor Protection System		
Reactor Protection System (RPS)	NSSS	NSSS
ENGINEERED SAFETY FEATURE SYSTEMS:		
Emergency Core Cooling System (ECCS)	NSSS	Partially-NSSS
- High Pressure Core Spray System (HPCS)		
- Automatic Depressurization System (ADS)		
- Low Pressure Core Spray System (LPCS)		
- RHR System, Low Pressure Coolant Injection Mode (LPCI)		
Containment and Reactor Vessel Isolation Control System (CRVICS)	NSSS	Partially-NSSS
Main Steam Isolation Valve Leakage Control System (MSIVLCS)	NSSS	Partially-NSSS
Combustible Gas Control System (CGCS)	NON-NSSS	NON-NSSS
Containment Heat Removal Systems	NSSS	Partially-NSSS
- RHR System, Containment Spray Mode		
- RHR System, Suppression Pool Cooling Mode		
Standby Gas Treatment System (SGTS)	NON-NSSS	NON-NSSS
Suppression Pool Makeup System (SPMU)	NON-NSSS	NON-NSSS
Main Control Room HVAC System	NON-NSSS	NON-NSSS
Overpressurization Protection System	NSSS	Partially-NSSS
Reactor Core Isolation Cooling System	NSSS	Partially-NSSS
RHR System, Feedwater Leakage Control (FWLC) Mode	NON-NSSS	NON-NSSS
ESSENTIAL AUXILIARY SUPPORT SYSTEMS		
Standby AC & DC Power System (including Diesel Generators)	Partially-NSSS	Partially-NSSS
Shutdown Service Water System (SSWS)	NON-NSSS	NON-NSSS
Diesel Fuel Oil System	NON-NSSS	NON-NSSS
ESF Ventilation Systems	NON-NSSS	NON-NSSS
- Essential Switchgear Heat Removal System		
- ECCS Equipment Room HVAC System		
- Diesel Generator Room HVAC System		

TABLE 7.1-1 (Cont'd)
SYSTEM IDENTIFICATION AND RESPONSIBILITY

SYSTEM	DESIGNER	SUPPLIER
- Shutdown Service Water Pump Room HVAC System		
- Combustible Gas Control System Equipment Cubicle Cooling System		
Systems Required for Safe Shutdown		
Remote Shutdown System (RSS)	Partially-NSSS	Partially-NSSS
Reactor Core Isolation Cooling System (RCIC)	NSSS	Partially-NSSS
Standby Liquid Control System (SLCS)	NSS	Partially-NSSS
RHR - Reactor Shutdown Cooling System	NSSS	Partially-NSSS
Safety-Related Display Instrumentation	Partially-NSSS	Partially-NSSS
All Other Instrumentation and Control Systems Required for Safety		
Process Radiation Monitoring System	Partially-NSSS	Partially-NSSS
Leak Detection System	Partially-NSSS	Partially-NSSS
Neutron Monitoring System	NSSS	NSSS
Intermediate Range Monitor (IRM)		
Average Power Range Monitor (APRM)		
Recirculation Pump Trip System (RPT)	NSSS	NSSS
Fuel Pool Cooling and Cleanup System	Non-NSSS	Non-NSSS
Containment Atmosphere Monitoring System	Non-NSSS	Non-NSSS
Rod Control and Information System	NSSS	NSSS
Rod Pattern Control System		
High Pressure/Low Pressure Systems	NSSS	NSSS
Interlock Protection		
Oscillation Power Range Monitor (OPRM)	Non-NSSS	Non-NSSS
Instrumentation and Control Systems Not Required For Safety		
Reactor Vessel Instrumentation	NSSS	NSSS
Rod Control and Information System-Rod Movement Control	NSSS	NSSS
Recirculation Flow Control System	NSSS	NSSS
Feedwater Control System	NSSS	Partially-NSSS
Pressure, Regulator and Turbine Generator System	Partially-NSSS	Non-NSSS
Neutron Monitoring System	NSSS	NSSS

TABLE 7.1-1 (Cont'd)
SYSTEM IDENTIFICATION AND RESPONSIBILITY

SYSTEM	DESIGNER	SUPPLIER
Source Range Monitor (SRM)		
Traversing Incore Probe (TIP)		
LPRM		
Performance Monitoring System	NSSS	NSSS
Display Control System	NSSS	NSSS
Reactor Water Cleanup System (RWCU)	NSSS	Partially-NSSS
Area Radiation Monitoring System (ARMS)	Non-NSSS	Non-NSSS
Gaseous Radwaste System	NSSS	NSSS
Liquid Radwaste System	Non-NSSS	Non-NSSS
Solid Radwaste System	Non-NSSS	Non-NSSS
HVAC for Non-Safety Areas		
Fuel Building HVAC System		
Drywell Purge System		
Containment Building HVAC System		
Radwaste Building HVAC System		
Auxiliary Building HVAC System		
Diesel Generator HVAC Makeup System		
Machine Shop HVAC System		
Laboratory HVAC System		
Turbine Building HVAC System		
Circulating Water Screenhouse HVAC System		
Process Radiation Monitoring	Partially-NSSS	Partially-NSSS
Fire Protection and Suppression System	Non-NSSS	Non-NSSS
Refueling Interlocks	NSSS	NSSS

TABLE 7.1-2
SIMILARITY TO LICENSED REACTORS*

INSTRUMENTATION AND CONTROLS (SYSTEM)		PLANTS APPLYING FOR OR HAVING CONSTRUCTION PERMIT OR OPERATING LICENSE	SIMILARITY OF DESIGN
(1)	Reactor Protection Trip System	Grand Gulf	Similar (A) (P)
(2)	Containment and Reactor Vessel Isolation Control System	Grand Gulf	Similar (B)
(3)	Emergency Core Cooling System		
	a) Low Pressure Core Spray System	Grand Gulf	Similar (F) (P)
	b) Automatic Depressurization System	Grand Gulf	Similar (D) (P)
	c) High Pressure Core Spray System	Grand Gulf	Similar (P)
	d) Low Pressure Coolant Injection (RHR)	Grand Gulf	Similar (F) (P)
(4)	Neutron Monitoring System	Grand Gulf	Similar (G)
(5)	Refueling Interlocks	Grand Gulf	Identical
(6)	Rod Control and Information System	Grand Gulf	Similar (H)
(7)	Reactor Vessel-Instrumentation	Grand Gulf	Similar (I)
(8)	Recirculation Flow Control System	Grand Gulf	Same (J)
(9)	Feedwater Control System	La Salle	Same (K)
(10)	Pressure Regulator and Turbine Generator System	Perry	Identical
(11)	Process Radiation Monitoring System	Grand Gulf	Similar (M)
(12)	Area Radiation Monitoring System	None	
(13)	Performance Monitoring System	Grand Gulf	Similar (O)
(14)	Standby Gas Treatment System		
(15)	Main Control Room Heating Ventilating and Air Conditioning System		
(16)	Shutdown Service Water System		
(17)	Combustible Gas Control System		
(18)	Reactor Core Isolation Cooling System	Grand Gulf	Similar (P)
(19)	Standby Liquid Control System	Grand Gulf	Similar
(20)	Containment Atmospheric Monitoring System	New Design	N/A
(21a)	Liquid Radwaste Systems		

TABLE 7.1-2 – (Continued)
SIMILARITY TO LICENSED REACTORS*

INSTRUMENTATION AND CONTROLS (SYSTEM)		PLANTS APPLYING FOR OR HAVING CONSTRUCTION PERMIT OR OPERATING LICENSE	SIMILARITY OF DESIGN
(21b)	Gaseous Radwaste Systems	New Design	
(21c)	Solid Radwaste Systems		
(22)	Reactor Water Cleanup System	Grand Gulf	Same (T)
(23)	Standby Power System		
(24)	Leak Detection Systems	Grand Gulf	Similar
(25)	Reactor Shutdown Cooling System		
(26)	Spent Fuel Pool Cooling and Cleanup System	AE at G.G.	
(27)	Containment Building HVAC		
(28)	Drywell Purge System		
(29)	Main Steamline Isolation Valve Leakage Control System	Grand Gulf	Similar (W)
(30)	Diesel Fuel Oil		
(31)	Drywell Cooling System		
(32)	Radwaste Building HVAC		
(33)	RHR-Containment Spray Cooling	Grand Gulf	Similar (P)
(34)	RHR-Shutdown Cooling	Grand Gulf	Similar (P)
(35)	Remote Shutdown System	La Salle	Similar (AA)
(36)	Recirculation Pump Trip	Grand Gulf	Similar (BB) (P)
(37)	Suppression Pool Cooling Mode (RHR)	Grand Gulf	Similar (P)
(38)	Suppression Pool Makeup System		
(39)	Diesel Generator Room Ventilation System HVAC System		
(40)	Shutdown Service Water Pump Room		
(41)	Essential Switchgear Heat Removal HVAC System		
(42)	ECCS Equipment Room HVAC System		
(43)	Auxiliary Building HVAC System		
(44)	Display Control System	Susquehanna	Similar (DD)
(45)	CGCS Equipment Cubicle Cooling System		

TABLE 7.1-2 – (Continued)
SIMILARITY TO LICENSED REACTORS*

INSTRUMENTATION AND CONTROLS (SYSTEM)	PLANTS APPLYING FOR OR HAVING CONSTRUCTION PERMIT OR OPERATING LICENSE	SIMILARITY OF DESIGN
(46) Fuel Building HVAC System		

DEFINITIONS

IDENTICAL - System function and hardware are identical.

SAME - System function is identical, but there may be minor hardware changes or hardware may vary due to size differences.

SIMILAR - System design is identical but hardware may vary due to size difference, new technology, or new system design implementation.

* This table provides an historical comparison of the Clinton Power Station instrumentation and controls system design to other plants applying for or having a construction permit or operating license at the time of issuance of the CPS Operating License. This table has not been maintained current.

NOTE A:

Grand Gulf RPS is 1-out-of-2 twice logic, whereas Clinton is 2-out-of-4 coincident logic.

NOTE B:

Functionally, the CRVICS logic at Clinton is identical to Grand Gulf except regarding the configuration of instrument channel trips required to produce MSIV isolation. At Clinton, two trips out of any four redundant instrument channels will produce isolation of all MSIVs. At Grand Gulf, a one-out-of-two-twice trip configuration is necessary to produce MSIV isolation.

NOTE D:

The ADS and SRV logic for Clinton is similar to that of Grand Gulf except for the following:

Clinton has 16 safety-related valves; Grand Gulf has 20.

NOTE F:

The design is identical to Grand Gulf except Clinton has a two out of two permissives which monitors pressure between the injection and check valves for the operational test of the MOV and Grand Gulf has a single permissive for the test operation.

NOTE G:

Clinton has four solid state APRM channels while Grand Gulf has eight. Clinton NMS is powered via four NSPS busses. Grand Gulf NMS is powered via the RPS busses.

TABLE 7.1-2 – (Continued)
SIMILARITY TO LICENSED REACTORS*

NOTE H:

The RC&IS architecture is set up for the maximum core size. Therefore, the difference between Grand Gulf and Clinton is 193 control rods versus 145 control rods, respectively.

NOTE I:

Grand Gulf has pressure sensors on the safety relief valve discharge lines, and alarm annunciation to indicate valve operation. Clinton does not have this feature. Otherwise, the two projects are functionally identical.

NOTE J:

Clinton reduces recirculation flow in response to loss of condenser circulating water pump. Grand Gulf does not.

NOTE K:

Control room readouts are hardwired indicators at La Salle. At Clinton, all of the indications are displayed on displays as part of Nuclenet, with a minimum of hardwired backup indication used during Nuclenet unavailability.

NOTE M:

Only the main steam line radiation monitors are similar.

NOTE O:

The Grand Gulf PMS has one processor for NSSS function only. The Clinton PMS has separate processors for NSSS and BOP functions. Also, the Clinton PMS interfaces with DCS. Grand Gulf does not have the DCS.

NOTE P:

Clinton uses solid state logic; Grand Gulf uses relay logic.

NOTE T:

The RWCU system controls for Grand Gulf are identical with those at Clinton except:

a) Clinton has controls for one additional RWCU pump (Clinton has three pumps, Grand Gulf two), and

b) Clinton has instrumentation to an additional set of non-regenerative and regenerative heat exchangers (two at Clinton, one at Grand Gulf).

c) Clinton has a time delay on the low flow pump trip, no delay at Grand Gulf.

NOTE W:

TABLE 7.1-2 – (Continued)
SIMILARITY TO LICENSED REACTORS*

Additional interlock at Clinton closes the bleed valves on excess pressure.

NOTE AA:

The RSS is functionally the same in providing remote shutdown capability. There is a variance between Clinton and La Salle in valves and equipment transferred because of piping mechanical differences. See Subsection 7.4 for a complete list of transferred equipment.

NOTE BB:

Clinton RPT is 2-out-of-4 coincident logic while Grand Gulf is two divisional 2-out-of-2 logic.

NOTE DD:

The Clinton DCS is mounted in Nuclenet control panels, while the Susquehanna display system is mounted in another type of panel. System operation is identical.

TABLE 7.1-3
CODES AND STANDARDS APPLICABILITY MATRIX

	GDC	1	2	3	4	5	10	12	13	14	15	17	18	19	20	21	22	23	24	25	26	27	28	29
RP (TRIP)S		X	X	X	X	X	X	X	X		X			X	X	X	X	X	X	X				X
CRVICS		X	X	X	X	X	X							X	X	X	X	X	X				X	X
ECCS		X	X	X	X	X			X			X	X	X	X	X	X		X		X			
NMS		X	X	X	X	X	X	X	X					X	X	X	X	X	X		X			
Refueling Interlocks																								
Rod Control & Information Sys.																			X		X			
Rod Pattern Control Subsystem		X	X	X	X	X			X						X	X	X	X		X				X
Reactor Vessel Instrumentation									X										X					
Recirculation Flow Control									X										X		X			
Feedwater Control																								
Pressure Regulator and Turbine Generator								X	X		X													
Process Radiation Monitoring		X	X	X	X	X			X					X	X	X	X	X	X					X
Area Radiation Monitoring									X					X										
Computer Systems																								
Standby Gas Treatment System		X	X	X	X	X								X	X	X	X	X	X					
Main Control Room HVAC		X	X	X	X				X					X	X	X	X	X	X					
Shutdown Service Water System		X	X	X	X	X			X					X	X	X	X	X	X					X
Combustible Gas Control System		X	X	X	X	X			X					X	X	X	X	X	X					X
RCIC									X						X	X	X	X	X					X
Standby Liquid Control System									X															
Containment Atmospheric Monitoring System									X					X										
Radwaste System																								
Reactor Water Clean-up System														X					X					
Standby Power System and HPCS Power Supply																								
Leak Detection Systems		X	X	X	X		X		X					X	X	X	X	X	X					
Reactor Shutdown Cooling Mode		X	X	X	X				X			X	X	X	X	X	X	X						
Spent Fuel Pool Cooling and Cleanup System		X	X	X	X				X				X											
Containment Building HVAC																								
Drywell Purge System																								
MSIV Leakage Control System		X	X	X	X				X					X	X	X	X	X	X					
Safety Related Display Instrumentation									X					X					X					
Diesel Fuel Oil		X	X	X	X				X			X	X	X	X	X	X		X					
Drywell Cooling System																								
Radwaste Building HVAC System																								
RHRS Containment Spray Cooling Mode									X		X	X	X	X	X	X	X	X	X					X

TABLE 7.1-3 – (Continued)
CODES AND STANDARDS APPLICABILITY MATRIX

GDC	1	2	3	4	5	10	12	13	14	15	17	18	19	20	21	22	23	24	25	26	27	28	29
Remote Shutdown System													X										
Suppression Pool Cooling Mode					X			X					X		X	X		X					
Suppression Pool Makeup System		X	X	X	X			X					X	X	X	X	X	X					
Recirculation Pump Trip		X	X	X	X	X			X				X	X	X	X	X						X
Diesel Generator Room HVAC		X	X	X	X				X														
Shutdown Service Water Pump Room HVAC		X	X	X	X				X														
Essential Switchgear Heat Removal HVAC		X	X	X	X				X														
ECCS Equipment Room HVAC		X	X	X	X				X														
Auxiliary Building HVAC																							
Fuel Building HVAC																							
Feedwater Leakage Control Mode		X	X	X	X	X			X				X										

GDC	30	31	33	34	35	37	38	40	41	43	44	46	50	54	55	56	57	60	61	62	63	64
RP (TRIP)S																						
CRVICS																						X
ECCS			X		X	X																
NMS																						
Refueling Interlocks																						
Rod Control & Information Sys.																						
Rod Pattern Control System																						
Reactor Vessel Instrumentation	X																					
Recirculation Flow Control																						
Feedwater Control																						
Pressure Regulator and Turbine Generator	X		X												X							
Process Radiation Monitoring														X				X	X		X	
Area Radiation Monitoring																			X	X	X	
Computer Systems																						
Standby Gas Treatment System																						X
Main Control Room HVAC											X	X										
Shutdown Service Water System				X	X	X					X	X										
Combustible Gas Control System				X					X	X				X		X						
RCIC																						
Standby Liquid Control System																						
Containment Atmospheric Monitoring System									X													
Radwaste System																		X	X		X	X
Reactor Water Cleanup System																						

TABLE 7.1-3 – (Continued)
CODES AND STANDARDS APPLICABILITY MATRIX

	GDC	30	31	33	34	35	37	38	40	41	43	44	46	50	54	55	56	57	60	61	62	63	64
Standby Power System and HPCS Power Supply																							
Leak Detection Systems		X		X	X	X									X								
Reactor Shutdown Cooling Mode					X	X		X	X			X	X		X	X	X						
Spent Fuel Pool Cooling and Cleanup System												X	X						X	X		X	
Containment Building HVAC																							
Drywell Purge System																			X				X
MSIV Leakage Control System																							
Safety Related Display Instrumentation										X													
Diesel Fuel Oil						X																	
Drywell Cooling System																							
Radwaste Building HVAC System																							
RHRS Containment Spray Cooling Mode					X			X	X														
Remote Shutdown System																							
Suppression Pool Cooling Mode						X	X																
Suppression Pool Makeup System						X	X																
Recirculation Pump Trip																							
Diesel Generator Room HVAC												X	X										
Shutdown Service Water Pump Room HVAC												X	X										
Essential Switchgear Heat Removal HVAC												X	X										
ECCS Equipment Room HVAC																							
Auxiliary Building HVAC						X														X			
Fuel Building HVAC																							
Feedwater Leakage Control Mode																							

	IEEE	279	308	317	323	336	338	344	379	384	387	334	383	622
RP (TRIP)S		X	X	X	X	X	X	X	X	X				
CRVICS		X	X	X	X	X	X	X	X	X				
ECCS		X	X		X	X	X	X	X	X	X			
NMS		X	X	X	X	X	X	X	X	X				
Refueling Interlocks														
Rod Control & Information Sys.		X												
Rod Pattern Control System		X			X		X		X	X				
Reactor Vessel Instrumentation		X								X				
Recirculation Flow Control														

TABLE 7.1-3 – (Continued)
CODES AND STANDARDS APPLICABILITY MATRIX

	IEEE	279	308	317	323	336	338	344	379	384	387	334	383	622
Feedwater Control System														
Pressure Regulator and Turbine Generator														
Process Radiation Monitoring		X			X	X	X	X	X					
Area Radiation Monitoring														
Computer Systems														
Standby Gas Treatment System		X			X	X	X	X	X	X				
Main Control Room HVAC		X			X	X	X	X	X	X				
Shutdown Service Water System		X			X	X	X	X	X	X				
Combustible Gas Control System		X			X	X	X	X	X	X				
RCIC		X			X		X	X						
Standby Liquid Control System		X	X				X	X						
Radwaste System														
Reactor Water Cleanup System														
Standby Power System and HPCS Power Supply														
Leak Detection System			X			X	X	X	X	X	X			
Containment Atmosphere Monitoring System														
1. High Gamma Rad'n. Monitoring Subsystem		X			X	X	X	X	X	X			X	
2. Cnmt. Atmos. H2/02 Monitoring Subsystem		X			X	X	X	X	X	X		X	X	X

	IEEE	279	308	317	323	336	338	344	379	384	387
Reactor Shutdown Cooling Mode		X	X		X			X	X		
Spent Fuel Pool Cooling and Cleaning System		X			X	X	X	X	X	X	
Containment Building HVAC											
Drywell Purge System											
MSIV Leakage Control System			X	X		X		X	X	X	
Safety Related Display Instrumentation		X									
Diesel Fuel Oil		X			X	X	X	X	X	X	
Drywell Cooling System											
Radwaste Building HVAC System											
RHRS Containment Spray Cooling Mode		X	X	X	X	X	X	X	X	X	X
Remote Shutdown System											
Recirculation Pump Trip		X	X	X	X		X	X	X		
Suppression Pool Cooling Mode		X	X				X	X			
Suppression Pool Makeup System		X			X	X	X	X	X	X	
Diesel Generator Room HVAC		X			X	X	X	X	X	X	

TABLE 7.1-3 – (Continued)
CODES AND STANDARDS APPLICABILITY MATRIX

	IEEE	279	308	317	323	336	338	344	379	384	387
Shutdown Service Water Pump Room HVAC		X			X	X	X	X	X	X	
Essential Switchgear Heat Removal HVAC		X			X	X	X	X	X	X	
ECCs Equipment Room HVAC		X			X	X	X	X	X	X	
Auxiliary Building HVAC											
Fuel Building HVAC											
Feedwater Leakage Control Mode		X	X		X	X	X	X	X	X	

	R.G.	1.6	1.7	1.9	1.11	1.21	1.22	1.29	1.30	1.32	1.47	1.48	1.52	1.53	1.56	1.62
RP (TRIP)S					X		X	X	X		X			X		X
CRVICS					X		X	X	X	X	X			X		X
ECCS		X		X	X		X	X	X	X	X			X		X
NMS							X	X	X	X	X			X		
Refueling Interlocks																
Rod Control & Information Sys.							X									
Rod Pattern Control System														X		
Reactor Vessel Instrumentation					X											
Recirculation Flow Control																
Feedwater Control System																
Pressure Regulator and Turbine Generator																
Process Radiation Monitoring						X	X	X			X			X		
Area Radiation Monitoring Computer Systems						X										
Standby Gas Treatment System							X	X			X		X	X		X
Main Control Room HVAC							X	X			X		X	X		X
Shutdown Service Water System						X	X	X			X			X		X
Combustible Gas Control System			X				X	X		X	X			X		X
RCIC		X			X		X	X	X	X	X			X	X	
Standby Liquid Control System							X	X	X		X			X		X
Radwaste System						X										
Reactor Water Cleanup System															X	
Standby Power Systems and HPCS Power Supply																
Leak Detection Systems							X	X	X		X			X		
Containment Atmosphere Monitoring System																
1. High Gamma Rad'n. Monitoring Subsystem								X						X		
2. Conmt. Atmos. H2/02 Monitoring Subsystem								X						X		

TABLE 7.1-3 – (Continued)
CODES AND STANDARDS APPLICABILITY MATRIX

R.G.	1.6	1.7	1.9	1.11	1.21	1.22	1.29	1.30	1.32	1.47	1.48	1.52	1.53	1.56	1.62
Reactor Shutdown Cooling Mode	X					X	X		X	X			X		
Spent Fuel Pool Cooling and Cleanup System						X	X			X			X		X
Containment Building HVAC							X								
Drywell Purge System															
MSIV Leakage Control System	X					X	X			X			X		
Safety Related Display Instrumentation						X	X		X	X			X		
Diesel Fuel Oil						X	X			X			X		
Drywell Cooling System															
Radwaste Building HVAC System															
RHRS Containment Spray Cooling Mode	X			X		X	X	X	X	X			X		
Remote Shutdown System															
Recirculation Pump Trip						X	X	X				X	X		
Suppression Pool Cooling Mode	X			X		X	X	X	X	X			X		
Suppression Pool Makeup System				X		X	X		X	X			X		
Diesel Generator Room HVAC						X	X			X			X		
Shutdown Service Water Pump Room HVAC						X	X			X			X		
Essential Switchgear Heat Removal HVAC						X	X			X				X	
ECCS Equipment Room HVAC						X	X			X			X		
Auxiliary Building HVAC			X												
Fuel Building HVAC															
Feedwater Leakage Control Mode	X						X	X	X	X			X		

R.G.	1.63	1.68	1.73	1.75	1.89	1.96	1.97	1.105	1.100	1.118	NUREG-0586	NUREG-0737
RP (TRIP)S	X	X		X	X		X	X	X	X		
CRVICS	X		X	X	X		X	X	X	X		
ECCS	X			X	X		X	X	X	X		
NMS				X	X			X	X	X		
Refueling Interlocks												
Rod Control & Information Sys.												
Rod Pattern Control System				X								
Reactor Vessel Instrumentation				X								
Recirculation Flow Control				X								
Feedwater Control System												
Pressure Regulator and Turbine Generator												

TABLE 7.1-3 – (Continued)
CODES AND STANDARDS APPLICABILITY MATRIX

	R.G.	1.63	1.68	1.73	1.75	1.89	1.96	1.97	1.105	1.100	1.118	NUREG-0586	NUREG-0737
Process Radiation Monitoring		X	X		X	X			X	X	X		
Area Radiation Monitoring			X										
Computer Systems													
Standby Gas Treatment System			X		X	X		X	X	X	X		
Main Control Room HVAC			X		X	X		X	X	X	X		
Shutdown Service Water System		X	X	X	X	X		X	X	X	X		
Combustible Gas Control System		X	X		X	X		X	X	X	X		
RCIC		X			X	X		X	X	X	X		
Standby Liquid Control System		X			X	X			X	X	X		
Radwaste System			X										
Reactor Water Cleanup System													
HPCS Power Supply													
Containment Atmosphere Monitoring System													
1. High Gamma Rad'n. Monitoring Subsystem					X	X		X	X			X	X
2. Cnmt. Atmos. H2/02 Monitoring Subsystem					X	X		X	X			X	X

	R.G.	1.63	1.68	1.73	1.75	1.89	1.96	1.97	1.100	1.105	1.118
Leak Detection Systems					X	X		X	X	X	X
Reactor Shutdown Cooling Mode (RHR)					X						
Spent Fuel Pool Cooling and Cleanup System		X	X	X	X	X				X	
Containment Exhaust System		X	X	X							
Drywell Purge System		X	X	X							
MSIV Leakage Control System					X	X	X		X	X	X
Safety Related Display Instrumentation								X			
Diesel Fuel Oil			X		X	X		X	X		X
Drywell Cooling System		X	X	X							
Radwaste Building HVAC			X								
RHRS Containment Spray Cooling Mode		X		X	X	X					
Remote Shutdown System			X		X						
Suppression Pool Cooling Mode		X			X	X		X		X	X
Suppression Pool Makeup System			X	X	X	X			X	X	X
Recirculation Pump Trip					X	X			X	X	X
Diesel Generator Room HVAC			X		X	X		X	X	X	X
Shutdown Service Water Pump Room HVAC			X		X	X		X	X	X	X
Essential Switchgear Heat Removal HVAC			X		X	X		X	X	X	X
ECCS Equipment Room HVAC			X		X	X		X	X	X	X
Auxiliary Building HVAC			X								

TABLE 7.1-3 – (Continued)
CODES AND STANDARDS APPLICABILITY MATRIX

R.G.	1.63	1.68	1.73	1.75	1.89	1.96	1.97	1.100	1.105	1.118
Fuel Building HVAC		X								
Feedwater Leakage Control Mode				X	X		X	X	X	X

NOTES:

This table indicates applicability of codes and standards to the systems. For a discussion of the degree of conformance, see the specific system discussions in each Subsection 7.X.2 Analysis.

TABLE 7.1-4 through TABLE 7.1-9

HAVE BEEN DELETED

TABLE 7.1-10
DIVISIONAL IDENTIFICATION OF SYSTEMS AND SUBSYSTEMS

Div 1	Div 2	Div 3	Div 4
A & E sensors	B & F sensors	C & G sensors	D & H sensors
RPS Div 1 logic	RPS Div 2 logic	RPS Div 3 logic	RPS Div 4 logic
RPS Sol Group 1	RPS Sol Group 2	RPS Sol Group 3	RPS Sol Group 4
MSLI Div 1 logic	MSLI Div 2 logic	MSLI Div 3 logic	MSLI Div 4 logic
OB MSIV Sol A & B	IB MSIV Sol A & B		
NS^4 Div 1 logic	NS^4 Div 2 logic	NS^4 Div 3 logic	NS^4 Div 4 logic
NS^4 A drivers	NS^4 B drivers		
NS^4 OB	NS^4 IB		
RCIC			
RCIC OB valve	RCIC IB valve		
ADS A	ADS B	HPCS	HPCS (sensors D & H only)
RHR A	RHR C		
RPT (Pump A)	RPT (Pump B)	RPT (Pump B)	RPT (Pump A)
LPCS	RHR B		
RPC (A)	RPC(B)		
Safety systems provided by others (for example, standby gas treat "A")	Safety systems provided by others (for example, standby gas treat "B")	Safety systems provided by others (for example, SSW pump "C", diesel generator "C", and HVAC fans/coolers)	

TABLE 7.1-10 – (Continued)
DIVISIONAL IDENTIFICATION OF SYSTEMS AND SUBSYSTEMS

The following are systems and sub-systems abbreviations used in Table 7.1-10

Abbreviations	Systems
NSSSS(NS^4)	Nuclear Steam Supply Shutoff System
ADS	Automatic Depressurization System
RPT	Recirculation Pump Trip
RPC	Rod Pattern Control System
RPS	Reactor Protection (Trip) System
RHR	Residual Heat Removal System
LPCS	Low Pressure Core Spray System
HPCS	High Pressure Core Spray System
RCIC	Reactor Core Isolation Cooling System
SSW	Shutdown Service Water System

The following are acronyms used in Table 7.1-10

OB	Outboard
IB	Inboard
MSIV	Main Steam Isolation Valves
MSLI	Main Steam Line Isolation

TABLE 7.1-11
FOUR DIVISION GROUPING OF THE NEUTRON MONITORING SYSTEM
UTILIZING FOUR CONTAINMENT PENETRATRIONS

CONTAINMENT PENETRATIONS

PENETRATION	X A1	X B1	X C1	X D1
NEUT MON CHAN				
APRM	A	B	C	D
IRM	A & E	B & F	C & G	D & H
RPS TRIP LOGIC	A	B	C	D

NOTES

(1) Penetrations indicated by the first line of the above table carry cables for neutron monitoring channels shown, and each channel serves RPS trip logic directly below it.

TABLE 7.1-12
EMERGENCY CORE COOLING SYSTEM, CORE STANDBY COOLING AND RCIC SENSOR SUFFIX LETTERS AND DIVISION ALLOCATION ENERGIZE-TO-OPERATE

DIVISION I	DIVISION II
SENSOR SUFFIX LETTERS	SENSOR SUFFIX LETTERS
A, E	B F
Operate ECCS A and RCIC directly and ECCS B through isolation devices	Operate ECCS B directly and ECCS A and RCIC through isolation devices
DIVISION III	**DIVISION IV**
SENSOR SUFFIX LETTER	SENSOR SUFFIX LETTERS
C, G	D, H

TABLE 7.1-13
SUMMARY INFORMATION FOR COMPLIANCE WITH REGULATORY GUIDE 1.97

	PARAMETER	ENVIRONMENTAL QUALIFICATION	SEISMIC QUALIFICATION	QUALITY ASSURANCE	REDUNDANCY	RANGE
	TYPE A					
A1)	RPV Pressure	Will comply with 10CFR50.49	Will comply with Reg. Guide 1.100	Complies	Two channels	0-1500 psig
A2)	RPV Water Level					
	Upset Range	No	Pressure boundary complies with Reg. Guide 1.100	Complies	One channel	0" to 180"
	Wide Range	Will comply with 10CFR50.49	Will comply with Reg. Guide 1.100	Complies	Two channels	-160" to 60"
	Fuel Zone Range	Will comply with 10CFR50.49	Will comply with Reg. Guide 1.100	Complies	Two channels	-150" to 50" and -310" to -110" Dual Range
A3)	Suppression Pool Bulk Average Temperature	Will comply with 10CFR50.49	Will comply with Reg. Guide 1.100	Complies	Two channels	40-250° F
A4)	Suppression Pool Level	Will comply with 10CFR50.49	Will comply with Reg. Guide 1.100	Complies	Two channels Two channels	8 ft to 16 ft 4 in 15 ft 8 in to 24 ft
A5)	Drywell Pressure	Will comply with 10CFR50.49	Will comply with Reg. Guide 1.100	Complies	Two channels	-5 to 35 psig
A6)	Containment and Drywell Hydrogen Concentration	Will comply with 10CFR50.49	Will comply with Reg. Guide 1.100	Complies	Two channels	0-30%
	TYPE B					
B1)	Neutron Flux	No	No	No	4 channels 8 channels 4 channels	SRM 10^{-1} to 10^{6} CPS IRM 10^{-4} to 40% RX PWR APRM 0 to 125%
B2)	Control Rod Position	N/A	N/A	N/A	One channel	Rod position
B3)	RCS Soluble Boron Concentration	N/A	N/A	N/A	One channel	Note 19
B4)	RPV Water Level					
	Upset Range	No	Pressure boundary complies with Reg. Guide 1.100	Complies	One channel	0" to 180"
	Wide Range	Will comply with 10CFR50.49	Will comply with Reg. Guide 1.100	Complies	Two channels	-160" to 60"
	Fuel Zone Range	Will comply with 10CFR50.49	Will comply with Reg. Guide 1.100	Complies	Two channels	-150" to 50"
B5)	BWR Core Temperature	No	No	No	No	No
B6)	RPV Pressure	Will comply with 10CFR50.49	Will comply with Reg. Guide 1.100	Complies	Two channels	0-1500 psig
B7)	Drywell Pressure	Will comply with 10CFR50.49	Will comply with Reg. Guide 1.100	Complies	Two channels	-5 to 35 psig
B8)	Drywell Sump Level	No	No	No	No	No
B9)	Primary Containment Pressure	Will comply with 10CFR50.49	Will comply with Reg. Guide 1.100	Complies	Two channels	-5 to 45 psig
B10)	Primary Containment Isolation Valve Position	Will comply with 10CFR50.49	Will comply with Reg. Guide 1.100	Complies	One indicator per valve	Closed and not closed

TABLE 7.1-13 (Cont'd)

	PARAMETER	POWER SUPPLY	CR DISPLAY	TSC LOCATION	EOF LOCATION	REMARKS
	TYPE A					
A1)	RPV Pressure	1E	Recorders Both Channels	Yes	Yes	
A2)	RPV Water Level					
	Upset Range	Station Power	Recorder	Yes	Yes	See Note 1
	Wide Range	1E	Recorders Both Channels	Yes	Yes	See Note 1
	Fuel Zone Range	1E	Recorder and Indicator	Yes	Yes	See Note 1
A3)	Suppression Pool Bulk Average Temperature	1E	(2) Recorders Both Channels	Yes	Yes	
A4)	Suppression Pool Level	1E	(2) Recorders Both Channels	Yes	Yes	Bottom of range is centerline of ECCS suction
A5)	Drywell Pressure	1E	Recorder Both Channels	Yes	Yes	See Note 2
A6)	Containment and Drywell Hydrogen Concentration	1E	Indicators Both Channels	Yes	Yes	
	TYPE B					
B1)	Neutron Flux	Station Power	2 Recorders 4 Recorders 4 Recorders	Yes	Yes	See Note 3
B2)	Control Rod Position	Station Power	Display Module	Yes	Yes	
B3)	RCS Soluble Boron Concentration	Station Power	No	Yes	Yes	Grab Sample
B4)	RPV Water Level					
	Upset Range	Station Power	Recorder	Yes	Yes	See Note 1
	Wide Range	1E	Recorders Both Channels	Yes	Yes	See Note 1
	Fuel Zone Range	1E	Recorder and Indicator	Yes	Yes	See Note 1
B5)	BWR Core Temperature	No	No	No	No	See Note 4
B6)	RPV Pressure	1E	Records Both Channels	Yes	Yes	See Parameter A1
B7)	Drywell-Pressure	1E	Records Both Channels	Yes	Yes	See Parameter A3
B8)	Drywell Sump Level	No	No	No	No	See Note 5
B9)	Primary Containment Pressure	1E	(2) Recorders Both Channels	Yes	Yes	
B10)	Primary Containment Isolation Valve Position	1E	One Indicator Per Valve	Yes	Yes	See Note 6

TABLE 7.1-13 (Cont'd)

	PARAMETER	ENVIRONMENTAL QUALIFICATION	SEISMIC QUALIFICATION	QUALITY ASSURANCE	REDUNDANCY	RANGE
	TYPE C					
C1)	Rad. Conc. or Rad. Level in Circulating Primary Coolant	No	No	No	No	No
C2)	Analysis of Primary Coolant	N/A	N/A	N/A	One channel	10 μCi/g to 10 Ci/g
C3)	BWR Core Temperature	No	No	No	No	No
C4)	RPV Pressure	Will comply with 10CFR50.49	Will comply with Reg. Guide 1.100	Complies	Two channels	0-1500 psig
C5)	Primary Containment Area Radiation	Will comply with 10CFR50.49	Will comply with Reg. Guide 1.100	Complies	Two channels each, dry-well and Containment	1 to 10^7 R/HR
C6)	Drywell Drain Sump Level	No	No	No	No	No
C7)	Suppression Pool Level	Will comply with 10CFR50.49	Will comply with Reg. Guide 1.100	Complies	Two channels Two channels	8 ft to 16 ft 4 in 15 ft 8 in to 24 ft
C8)	Drywell Pressure	Will comply with 10CFR50.49	Will comply with Reg. Guide 1.100	Complies	Two channels	-5 to 35 psig
C9)	RPV Pressure	Will comply with 10CFR50.49	Will comply with Reg. Guide 1.100	Complies	Two channels	0-1500 psig
C10)	Primary Containment Pressure	Will comply with 10CFR50.49	Will comply with Reg. Guide 1.100	Complies	Two channels	-5 to 45 psig
C11)	Containment and Drywell Hydrogen Concentration	Will comply with 10CFR50.49	Will comply with Reg. Guide 1.100	Complies	Two channels each	0 - 30%
C12)	Containment and Drywell Oxygen Concentration	Will comply with 10CFR50.49	Will comply with Reg. Guide 1.100	Complies	Two channels each	0 - 30%
C13)	Containment Effluent Radio-activity - Noble Gases	N/A	N/A	N/A	One channel (SGTS) One channel (HVAC)	$6.3x10^{-7}$ to $2.3x10^{1}$ μCi/CC $6.4x10^{-7}$ to $2.6x10^{1}$ μCi/CC
C14)	Radiation Exposure Rate	No	No	No	No	No
C15)	Effluent Radioactivity - Noble Gases	Will comply with 10CFR50.49 except for the CR display	Will comply with Reg. Guide 1.100 except for the CR display	Complies	One Channel each vent/stack	$1.3x10^{-4}$ to $1.0x10^{5}$ Xe-133 equivalent μCi/CC
	TYPE D					
D1)	Main Feedwater Flow	N/A	N/A	N/A	Two channels	0 to $2x10^{7}$ lbs/hr
D2)	Condensate Storage Tank Level	N/A	N/A	N/A	One channel	0" to 282" Bottom to top
D2A)	RCIC Storage Tank Level	To comply with 10CFR50.49	Will comply with Reg. Guide 1.100	Complies	One channel	Bottom to top

TABLE 7.1-13 (Cont'd)

	PARAMETER	POWER SUPPLY	CR DISPLAY	TSC LOCATION	EOF LOCATION	REMARKS
	TYPE C					
C1)	Rad. Conc. or Rad. Level in Circulating Primary Coolant	No	No	No	No	See Note 7
C2)	Analysis of Primary Coolant	Station Power	No	Yes	Yes	Uses a spectral analysis system
C3)	BWR Core Temperature	No	No	No	No	See parameter B5
C4)	RPV Pressure	1E	Recorders Both Channels	Yes	Yes	See parameter A1
C5)	Primary Containment Area Radiation	1E	Indicator Both Channels	Yes	Yes	See Note 16
C6)	Drywell Drain Sump Level	No	No	No	No	See Note 5
C7)	Suppression Pool Level	1E	(2) Recorders Both Channels	Yes	Yes	See parameter A4
C8)	Drywell Pressure	1E	Recorders both Channels	Yes	Yes	See parameter A5
C9)	RPV Pressure	1E	Recorders Both Channels	Yes	Yes	See parameter A1
C10)	Primary Containment Pressure	1E	(2) Recorders Both Channels	Yes	Yes	See parameter B9
C11)	Containment and Drywell Hydrogen Concentration	1E	Indicators Both Channels	Yes	Yes	See parameter A6
C12)	Containment and Drywell Oxygen Concentration	1E	Indicators Both Channels	Yes	Yes	
C13)	Containment Effluent Radioactivity - Noble Gas	Station Power	Computer-based video monitor	Yes	Yes	Notes 17, 21
C14)	Radiation Exposure Rate	No	No	No	No	Do not plan to install. Deleted from Rev. 3 of Reg. Guide
C15)	Effluent Radioactivity - Noble Gas	1E	Computer-based video monitor	Yes	Yes	See Notes 8, 17, 21
	TYPE D					
D1)	Main Feedwater Flow	Station Power	Recorder	Yes	Yes	
D2)	Condensate Storage Tank Level	Station Power	Indicator	Yes	Yes	
D2A)	RCIC Storage Tank Level	1E	Indicator	Yes	Yes	

TABLE 7.1-13 (Cont'd)

	PARAMETER	ENVIRONMENTAL QUALIFICATION	SEISMIC QUALIFICATION	QUALITY ASSURANCE	REDUNDANCY	RANGE
	TYPE D (Cont'd)					
D3)	Containment (Suppression Chamber) Spray Flow	Will comply with 10CFR50.49	Will comply with Reg. Guide 1.100	Complies	Two channels	0 to 7000 gpm
D4)	Drywell Pressure	Will comply with 10CFR50.49	Will comply with Reg. Guide 1.100	Complies	Two channels	-5 to 35 psig
D5)	Suppression Pool Level	Will comply with 10CFR50.49	Will comply with Reg. Guide 1.100	Complies	Two channels Two channels	8 ft to 16 ft 4 in 15 ft 8 in to 24 ft
D6)	Suppression Pool Bulk Average Temperature	Will comply with 10CFR50.49	Will comply with Reg. Guide 1.100	Complies	Two channels	40-250° F
D7)	Drywell Atmosphere Bulk Average Temperature	Will comply with 10CFR50.49	Will comply with Reg. Guide 1.100	Complies	Two channels	40 to 350° F
D8)	Drywell Spray Flow	No	No	No	No	No
D9)	MSIV Leakage Control System Pressure	Will comply with 10CFR50.49	Will comply with Reg. Guide 1.100	Complies	Two channels	0 to 90" WC
D10)	SRV/ADS Valve Position	Will comply with 10CFR50.49	Will comply with Reg. Guide 1.100	Complies	16 channels; one per valve	Closed-Not closed
D11)	Isolation Condenser Water Level	No	No	No	No	No
D12)	Isolation Condenser System Valve Position	No	No	No	No	No
D13)	RCIC Flow	Will comply with 10CFR50.49	Will comply with Reg. Guide 1.100	Complies	One channel	0-800 gpm
D14)	HPCS Flow	Will comply with 10CFR50.49	Will comply with Reg. Guide 1.100	Complies	One channel	0-8000 gpm
D15)	Core Spray System Flow (LPCS)	Will comply with 10CFR50.49	Will comply with Reg. Guide 1.100	Complies	One channel	0-8000 gpm
D16)	LPCI System Flow	Will comply with 10CFR50.49	Will comply with Reg. Guide 1.100	Complies	3 channels	0 to 7000 gpm
D17)	SLCS Flow	No	No	No	No	No
D18)	SLCS Storage Tank Level	N/A	N/A	N/A	One channel	0 to 5000 gallons
D19)	RHR System Flow	Will comply with 10CFR50.49	Will comply with Reg. Guide 1.100	Complies	3 channels	0 to 7000 gpm

TABLE 7.1-13 (Cont'd)

	PARAMETER	POWER SUPPLY	CR DISPLAY	TSC LOCATION	EOF LOCATION	REMARKS
	TYPE D (Cont'd)					
D3)	Containment Suppression (Chamber) Spray Flow	1E	Indicators Both Channels	Yes	Yes	
D4)	Drywell Pressure	1E	Recorders Both Channels	Yes	Yes	See parameter A5
D5)	Suppression Pool Level	1E	(2) Recorders Both Channels	Yes	Yes	See parameter A4
D6)	Suppression Pool Bulk Average Temperature	1E	(2) Recorders Both Channels	Yes	Yes	See parameter A3
D7)	Drywell Atmosphere Bulk Average Temperature	1E	Recorders Both Channels	Yes	Yes	See Note 9
D8)	Drywell Spray Flow	No	No	No	No	Do not plan to install. CPS does not have a drywell spray system.
D9)	MSIV Leakage Control System Pressure	1E	Indicators Both Channels	Yes	Yes	See Note 10
D10)	SRV/ADS Valve Position	1E	Indicators Each of 16 Channels	Yes	Yes	
D11)	Isolation Condenser Water Level	No	No	No	No	Do not plan to install. CPS does not have an isolation condenser.
D12)	Isolation Condenser System Valve Position	No	No	No	No	See parameter D11
D13)	RCIC Flow	1E	Indicator	Yes	Yes	
D14)	HPCS Flow	1E	Indicator	Yes	Yes	
D15)	Core Spray System Flow (LPCS)	1E	Indicator	Yes	Yes	
D16)	LPCI System Flow	1E	Indicators Each of 3 Channels	Yes	Yes	
D17)	SLCS Flow	No	No	No	No	See Note 11
D18)	SLCS Storage Tank Level	Station Power	Indicator	Yes	Yes	See Note 12
D19)	RHR System Flow	1E	Indicators Each of 3 Channels	Yes	Yes	

TABLE 7.1-13 (Cont'd)

	PARAMETER	ENVIRONMENTAL QUALIFICATION	SEISMIC QUALIFICATION	QUALITY ASSURANCE	REDUNDANCY	RANGE
	TYPE D (Cont'd)					
D20)	RHR HX Outlet Temperature	Will comply with 10CFR50.49	Will comply with Reg. Guide 1.100	Complies	2 channels	32° to 350° F
D21)	Cooling Water Temperature to ESF System Components	Will comply with 10CFR50.49	Will comply with Reg. Guide 1.100	Complies	2 channels	32° to 200° F
D22)	Cooling Water Flow to ESF System Components	Will comply with 10CFR50.49	Will comply with Reg. Guide 1.100	Complies	3 channels	0 to 200 psid 0 to 10,000 GPM
D23)	High Radioactivity Liquid Tank Level	N/A	N/A	N/A	One channel per tank	Bottom to top
D24)	Emergency Ventilation Damper Position	Will comply with 10CFR50.49	Will comply with Reg. Guide 1.100	Complies	One channel per damper	Opened and Closed
D25)	Status of Standby Power And Other Energy Sources Important to Safety					
A)	ADS Instrument Air Header Pressure	Will comply with 10CFR50.49	Will comply with Reg. Guide 1.100	Complies	Two channel	0-250 psig
B)	ADS Backup Air Bottle Header Pressure	Will comply with 10CFR50.49	Will comply with Reg. Guide 1.100	Complies	Two channel	0-3000 psig
C)	DG Voltage	Will comply with 10CFR50.49	Will comply with Reg. Guide 1.100	Complies	Three channel	0-5250V
D)	DG Amperes	Will comply with 10CFR50.49	Will comply with Reg. Guide 1.100	Complies	Three channel	0-800 AMPS 0-600 AMPS
E)	4.16-kV Bus Voltages	Will comply with 10CFR50.49	Will comply with Reg. Guide 1.100	Complies	Three channel	0-5250V
F)	4.16-kV Bus Incoming Breaker Current	Will comply with 10CFR50.49	Will comply with Reg. Guide 1.100	Complies	Three channel	0-800 AMPS 0-600 AMPS
G)	DC Bus Voltage	Will comply with 10CFR50.49	Will comply with Reg. Guide 1.100	Complies	Four channel	0-150V
H)	DC Bus Current	Will comply with 10CFR50.49	Will comply with Reg. Guide 1.100	Complies	Three channel	-750 to +750 AMPS (2 busses) -300 to +300 AMPS (1 bus)

TABLE 7.1-13 (Cont'd)

	PARAMETER	POWER SUPPLY	CR DISPLAY	TSC LOCATION	EOF LOCATION	REMARKS
	TYPE D (Cont'd)					
D20)	RHR HX Outlet Temperature	1E	Indicators Both Channels	Yes	Yes	
D21)	Cooling Water Temperature to ESF System Components	1E	Indicators Both Channels	Yes	Yes	
D22)	Cooling Water Flow to ESF System Components	1E	Indicators Each or 3 Channels	Yes	Yes	See Note 13
D23)	High Radioactivity Liquid Tank Level	Station Power	No	Yes	Yes	Radwaste Operation Center
D24)	Emergency Ventilation Damper Position	1E	One Indicator Per Damper	Yes	Yes	
D25)	Status of Standby Power and Other Energy Sources Important to Safety					
A)	ADS Instrument Air Header Pressure	1E	Indicators Both Channels	No	No	
B)	ADS Backup Air Bottle Pressure	1E	Indicators Both Channels	No	No	
C)	DG Voltage	1E	Indicators Each of 3 Channels	Yes	Yes	
D)	DG Amperes	1E	Indicators Each of 3 Channels	Yes	Yes	
E)	4.16KV Bus Voltages	1E	Indicators Each of 3 Channels	Yes	Yes	
F)	4.16 KV Bus Incoming Breaker Current	1E	Indicators Each of 3 Channels	Yes	Yes	
G)	DC Bus Voltage	1E	Indicators Each of 4 Channels	Yes	Yes	
H)	DC Bus Current	1E	Indicators Each of 3 Channels	Yes	Yes	See Note 14

TABLE 7.1-13 (Cont'd)

	PARAMETER	ENVIRONMENTAL QUALIFICATION	SEISMIC QUALIFICATION	QUALITY ASSURANCE	REDUNDANCY	RANGE
	TYPE E					
E1)	Primary Containment Area Radiation - High Range	Will comply with 10CFR50.49	Will comply with Reg. Guide 1.100	Complies	Two channels each drywell and containment	1 to 10^7 R/hr
E2)	Reactor Building or Secondary Containment Area Radiation – High Range	---	---	---	---	---
E3)	Radiation Exposure Rate	N/A	N/A	N/A	One channel	10^{-4} to 2.2 R/hr Fixed 10^{-3} to 1.99×10^4 R/hr Portable Survey
E4)	Noble Gases and Vent Flow Rates	---	---	---	---	
A)	Drywell Purge, SGTS, Secondary Containment Purge	---	---	---	---	
B)	Secondary Containment Purge	---	---	---	---	
C)	Secondary Containment	---	---	---	---	
D)	Auxiliary Building	---	---	---	---	
E)	Common Plant Vent or Multi-Purpose Vent Discharging Any of the Above Releases	Will comply with 10CFR50.49	Will comply with Reg. Guide 1.100 except for the CR display	Complies	One channel each point	1.3×10^{-4} to 1.0×10^5 Xe-133 equivalent µCi/CC
F)	All Other Identified Released Points	---	---	---	---	
E5)	Particulates and Halogens (Sample, with Onsite Analysis Capability)	N/A	N/A	N/A	One channel	10^{-3} to 10^2 µCi/CC
E6)	Radiation Exposure Meters	No	No	No	No	No
E7)	Airborne Radiohalogens and Particulates (Portable Sampling with On-Site Analysis Capability)	N/A	N/A	N/A	One channel	10^{-9} to 10^{-3} µCi/CC

TABLE 7.1-13 (Cont'd)

	PARAMETER	POWER SUPPLY	CR DISPLAY	TSC LOCATION	EOF LOCATION	REMARKS
	TYPE E					See Note 16
E1)	Primary Containment Area Radiation - High Range	1E	Indicators-Each or 4 Channels	Yes	Yes	
E2)	Reactor Building or Secondary Containment Area Radiation - High Range	---	---	---	---	Covered in parameter E1
E3)	Radiation Exposure Rate	Station power for fixed, battery for portable survey	Computer-based video monitor for fixed, verbal for portable video	Yes	Yes	
E4)	Noble Gases and Vent Flow Rates	---	---	---	---	
A)	Drywell Purge, SGTS, Secondary Containment Purge	---	---	---	---	See parameter E4.E
B)	Secondary Containment Purge	---	---	---	---	See parameter E4.E
C)	Secondary Containment	---	---	---	---	See parameter E4.E
D)	Auxiliary Building	---	---	---	---	See parameter E4.E
E)	Common Plant Vent or Multi-Purpose Vent Discharging Any of the Above Releases	1E	Computer-based video monitor	Yes	Yes	See parameter C15 See Notes 17, 21
F)	All Other Identified Released Points	---	---	---	---	See parameter E4.E
E5)	Particulates and Halogens (Sample, with Onsite Analysis Capability)	Station Power	No	Yes	Yes	Uses spectral analysis system. See Note 18
E6)	Radiation Exposure Meters	No	No	No	No	See Note 15
E7)	Airborne Radiohalogens and Particulates (Portable Sampling with On-Site Analysis Capability)	Station Power	No	Yes	Yes	Uses spectral analysis system

TABLE 7.1-13 (Cont'd)

	PARAMETER	ENVIRONMENTAL QUALIFICATION	SEISMIC QUALIFICATION	QUALITY ASSURANCE	REDUNDANCY	RANGE
	TYPE E (Cont'd)					
E8)	Plant and Environs (Portable Instrumentation)	N/A	N/A	N/A	One channel	10^{-3} to 10^{4} R/HR Photons 10^{-3} to > 10^{4} Rads/hr Beta
E9)	Plant and Environs Radioactivity (Portable Instrumentation)	N/A	N/A	N/A	One channel	Isotopic analysis
E10)	Wind Direction	N/A	N/A	N/A	Two channels	0° to 360°
E11)	Wind Speed	N/A	N/A	N/A	Two channels	0 to 100 mph,
E12)	Estimation of Atmospheric Stability (Differential Temperature)	N/A	N/A	N/A	One channel	-5.4 °F to 12.6 °F
E13)	Accident Sampling Capability - Reactor Coolant					See Note 22
A)	Gross Activity	N/A	N/A	N/A	One channel	1 mCi/ml to 10 Ci/ml
B)	Gamma Spectrum	N/A	N/A	N/A	One channel	Isotopic analysis (See Note 22)
C)	Boron Content	N/A	N/A	N/A	One channel	See Note 19
D)	Chloride Content	N/A	N/A	N/A	One channel	0 to 20 ppm
E)	Dissolved H_2 or Total Gas	No	No	No	No	See Note 22
F)	Dissolved O_2	No	No	No	No	See Note 22
G)	pH	N/A	N/A	N/A	One channel	1 to 13 pH
E14)	Accident Sampling Capability - Containment Air					
A)	H_2 Content	No	No	No	No	See Note 23
B)	O_2 Content	No	No	No	No	See Note 23
C)	Gamma Spectrum	N/A	N/A	N/A	One channel	Isotopic analysis

TABLE 7.1-13 (Cont'd)

	PARAMETER	POWER SUPPLY	CR DISPLAY	TSC LOCATION	EOF LOCATION	REMARKS
	TYPE E (Cont'd)					
E8)	Plant & Environs Radiation (Portable Instrumentation)	Battery	No	Yes	Yes	RO-7 survey meters. See Note 16
E9)	Plant & Environs Radioactivity (Portable Instrumentation)	Station Power	No	Yes	Yes	Uses spectral analysis, ALARA, and dosimetry recordkeeping system
E10)	Wind Direction	Station Power	Recorders Both Channels	Yes	Yes	
E11)	Wind Speed	Station Power	Recorders Both Channels	Yes	Yes	
E12)	Estimation of Atmospheric Stability (Differential Temperature)	Station Power	Recorder	Yes	Yes	
E13)	Accident Sampling Capability - Primary Coolant & Sump					
A)	Gross Activity	Station Power	No	Yes	Yes	Uses spectral analysis, ALARA, and dosimetry recordkeeping system
B)	Gamma Spectrum	Station Power	No	Yes	Yes	Uses spectral analysis, ALARA, and dosimetry record keeping system
C)	Boron Content	Station Power	No	Yes	Yes	Lab analysis
D)	Chloride Content	Station Power	No	Yes	Yes	Lab analysis (onsite/offsite) See Note 20
E)	Dissolved H_2 or Total Gas	1E	No	Yes	Yes	Recorded on pass panel
F)	Dissolved O_2	1E	No	Yes	Yes	Indicated on pass panel
G)	pH	1E	No	Yes	Yes	Indicated on pass panel
E14)	Accident Sampling Capability - Containment Air					
A)	H_2 Content	---	---	---	---	See parameter A5
B)	O_2 Content	---	---	---	---	See parameter C12
C)	Gamma Spectrum	Station Power	No	Yes	Yes	Uses spectral analysis, ALARA, and dosimetry recordkeeping system

TABLE 7.1-13 (Cont'd)

Notes:

1. Variables A2 and B4 - RPV Level

   Issue definition: The measurement of RPV water level is specified as a key variable to monitoring and maintaining core cooling and maintaining reactor coolant system integrity. RPV level is classified as both a Type A and B, Category I variable. The specified range is 197.6 in. to 636.5 in.

   Discussion: Clinton has redundant and qualified level measurement for the range of 360.6 in. to 580.6 in. with respect to vessel bottom. In addition, Clinton has redundant and qualified level instruments for the range of 208.6 in. to 408.6 in. with respect to vessel bottom. The control room displays for fuel zone level (208.6 in. to 408.6 in.) include one fully qualified indicator and one unqualified, but properly isolated, non-divisional recorder. The recorder loop is fully qualified Class 1E, up to and including the isolation device. Clinton also has level measurement which is seismically qualified from a reactor coolant pressure boundary standpoint, but not environmentally qualified, for the range of 520.6 in. to 700.6 in.

2. Variable A5 - Drywell Pressure

   Issue definition: The measurement of drywell pressure is specified as a key variable in maintaining containment and reactor coolant system integrity. Drywell pressure is classified as a Type A variable, Category 1. The specified ranges are -5 psig to 3 psig and 0 to 110% design pressure.

   Discussion: Clinton has redundant and qualified pressure measurement for the range of -5 to 35 psig. The range provided exceeds the range proposed within Reg. Guide 1.97.

3. Variable B1 - Neutron Flux

   Issue definition: The measurement of neutron flux is specified as the key variable in monitoring the status of reactivity. Neutron flux is classified as a Type B variable, Category 1. The specified range is 10^{-6}% to 100% full power (SRM, APRM). The stated purpose is "function detection; accomplishment of mitigation".

   Discussion: The Clinton neutron monitoring detectors are powered from a 1E power source, but the SRM/IRM drive mechanisms and all neutron monitoring displays are powered from station power. Continuous recording is provided. The existing monitoring system is capable of providing the intended function of this variable until the industry developmental activities are completed.

4. Variable B5 - BWR Core Temperature

   Issue definition: The measurement of BWR core temperature is specified to monitor the status of core cooling. BWR core temperature is classified as a Type B variable, Category - (unstated). The specified range is 200° F to 2300° F. The stated purpose is "to provide diverse indication of water level."

TABLE 7.1-13 (Cont'd)

Notes (Cont'd)

Discussion: The use of in-core thermocouples has been investigated, and an analysis of the heat transfer in a BWR fuel bundle during a core uncovery event was performed to determine the nature of the response of thermocouples to core heatup. The thermocouples were assumed to be located in the in-core guide tubes and heated primarily by radiation from the fuel channels. Results of this analysis show that, for conditions typical of small break, loss-of-coolant accidents, there is a delay of at least 13 minutes between the start of core uncovery and the time when the thermocouples read 45° F above saturation. It is also probable that operation of relief valves during a small-break LOCA would interfere with the thermocouples' operation and could render them useless.

In-core thermocouples should not be required for diverse water level monitoring and no longer are being considered by the Nuclear Regulatory Commission. Reference: NRC Generic Letter 84-23 dated October 26, 1984.

5. Variable B8 - Drywell Sump Level
Variable C6 - Drywell Drain Sump Level

Issue Definition: Regulatory Guide 1.97 requires Category 1 instrumentation to monitor drywell sump level (Variable B8) and drywell drain sump level (Variable C6). These designations refer to the drywell equipment and floor drain sump levels. The following discussion supports the CPS position that drywell sump level and drywell drain sump level should not be implemented as Regulatory Guide 1.97 parameters, however, in lieu of monitoring sump levels, CPS proposes to monitor the drywell equipment drain sump flow (drywell sump flow) and the drywell floor drain sump flow (drywell drain sump flow) with existing Category 3 instrumentation.

Discussion: The Clinton Power Station drywell has two sumps monitored by leakage detection instrumentation. One sump is the equipment drain sump, which collects identified leakage; the other is the floor drain sump, which collects unidentified leakage. There is other instrumentation required by Regulatory Guide 1.97 that would indicate leakage in the drywell:

1. Drywell pressure - Type A, Category 1

2. Drywell temperature - Type D, Category 2

3. Primary containment area radiation - Types C & E, Category 1

The drywell leak detection system for the Clinton Power Station includes the monitoring of the drywell floor drain and equipment sumps as described in Subsections 5.2.5.4.2, 5.2.5.5, 5.2.5.10, 7.7.1.24.10 and 7.7.2.24. In general, a detailed description of the drywell equipment sump and the drywell floor drain sump is provided in Subsection 7.7.1.24.10.1.1. The sump leakage detection system is classified as not related to safety and uses non-essential 120-Vac instrument power. The system is in compliance with Regulatory Guide 1.45 as described in Subsection 5.2.5.10.

TABLE 7.1-13 (Cont'd)

Notes (Cont'd)

The normal design leakage collected in the floor drain sump includes unidentified leakage from the control rod drives, valve flange leakage, component service water, air cooler drains, and any other leakage not connected to the equipment drain sump. The floor drain sump is provided with two systems through which all leakage flows as described in USAR section 7.7.1.24.10.1.1. Flow rate signals are continuously recorded in the main control room. An excessive flow rate will activate an annunciator. The flow rate signals are also input to the plant process computer system. The flow rates are integrated to give a total sump influent volume and displayed on resettable counters in the main control room.

The Emergency Procedure Guidelines use the RPV level and the drywell pressure as entry conditions for the Level Control Guidelines. As such, the drywell sump indications are not the primary symptoms used for operator action in these guidelines. A small line break will cause the drywell pressure to increase before a noticeable increase in the sump level. Therefore, the drywell sump will provide a "lagging" versus "early" indication of a leak.

6. Variable B10 - Primary Containment Isolation Valve Position

Issue definition: Primary containment isolation valve position is specified as a key variable to monitor containment integrity. Primary containment isolation valve position is classified as a Type B variable, Category 1. The specified range is closed-not closed. The stated purpose is "accomplishment of isolation."

Discussion: With the exception of some check, pressure relief and test valves, all containment isolation valves have position indication in the main control room. The test valves will be under administrative control. All pressure relief valves are not capable of being fitted with position switches, but the intent of Regulatory Guide 1.97 is being met. The regulatory guide does not impose position indication requirements on any check valves.

7. Variable C1 - Radioactivity Concentration or Radiation Level in Circulating Primary Coolant

Issue definition: Regulatory Guide 1.97 specifies that the status of the fuel cladding be monitored during and after an accident. The specified variable to accomplish this monitoring is Variable C1--radioactivity concentration or radiation level in circulating primary coolant. The range is given as "½ Tech Spec Limit to 100 times Tech Spec Limit, R/hr." In Table 2 of Regulatory Guide 1.97, Revision 3, instrumentation for measuring Variable C1 is designated as Category 1. The purpose for monitoring this variable is given as "detection of breach", referring, in this case, to breach of fuel cladding.

Discussion: The usefulness of the information obtained by monitoring the radioactivity concentration or radiation level in the circulating primary coolant, in terms of helping the operator in his efforts to prevent and mitigate accidents, has not been substantiated. The critical actions that must be taken to prevent and mitigate a gross breach of fuel cladding are (1) shut down the reactor and (2) maintain water level. Monitoring Variable

TABLE 7.1-13 (Cont'd)

Notes (Cont'd)

C1, as directed in Regulatory Guide 1.97, will have no influence on either of these actions. The purpose of this monitor falls in the category of "information that the barriers to release of radioactive material are being challenged" and "identification of degraded conditions and their magnitude, so the operator can take actions that are available to mitigate the consequences." Additional operator actions to mitigate the consequences of fuel barriers being challenged, other than those based on Type A and B variables, have not been identified.

Regulatory Guide 1.97 specifies measurement of the radioactivity of the circulating primary coolant as the key variable in monitoring fuel cladding status during isolation of the NSSS. The words "circulating primary coolant" are interpreted to mean coolant, or a representative sample of such coolant, that flows past the core. A basic criterion for a valid measurement of the specified variable is that the coolant being monitored is coolant that is in active contact with the fuel, that is, flowing past the failed fuel. Monitoring the active coolant (or a sample thereof) is the dominant consideration. The post-accident sampling system (PASS) provides a representative sample which can be monitored. (Note: License Amendment 155 eliminated the requirements for the PASS.)

The subject of concern in the Regulatory Guide 1.97 requirement is assumed to be an isolated NSSS that is shut down. This assumption is justified as current monitors in the condenser off-gas and main steam lines provide reliable and accurate information on the status of fuel cladding when the plant is not isolated. Further, the PASS will provide an accurate status of coolant radioactivity, and hence cladding status, once the PASS is activated. In the interim between NSSS isolation and operation of the PASS, monitoring of the primary containment radiation and containment hydrogen both Category 1 variables, will provide information on the status of the fuel cladding.

8. <u>Variable C15 - Effluent Radioactivity - Noble Gas</u>

Issue definition: The measurement of effluent radioactivity-noble gas is classified as a Type C variable, Category 2. The specified range is 10^{-6} μCi/cc to 10^{3} μCi/cc. The stated purpose is "indication of breach".

Discussion: Clinton has procured instrumentation to monitor effluent radioactivity qualified to Category 2 requirements which has a range lower limit of 1.3×10^{-4} Xe-133 equivalent μCi/cc. It is not practical to implement Category 2 qualified lower range instrumentation nor necessary from the standpoint of functional need. Clinton has Category 3 instrumentation which provides a lower range capability of 6.3×10^{-7} μCi/cc. Providing this lower range coverage by unqualified devices is acceptable since indication below the range of 1.3×10^{-4} μCi/cc is not significant in severe accident scenarios.

9. <u>Variable D7 - Drywell Atmosphere Temperature</u>

Issue definition: The measurement of drywell atmosphere temperature is classified as a Type D variable, Category 2. The specified range is 40° F to 440° F. The stated purpose is "to monitor operation."

TABLE 7.1-13 (Cont'd)

Notes (Cont'd)

Discussion: The Clinton existing instrument range is 40° F to 350° F. The implemented range exceeds the DBA limit of 330° F. To extend the upward bound of this temperature range would introduce greater departures from linearity.

10. Variable D9 - MSIV Leakage Control System Pressure

Issue definition: The measurement of MSIV leakage control system pressure is classified as a Type D, Category 2. The specified ranges are 0" to 15" H_2O and 0 to 5 psid. The stated purpose is "to provide indication of pressure boundary maintenance."

Discussion: The Clinton design monitors both the inboard and outboard system pressures. The licensing commitment for range of these instruments is 0-90 inches of water. The existing ranges of these instruments exceed this commitment. System differential pressure can be ascertained from these instruments.

11. Variable D17 - SLCS Flow

Issue definition: The measurement of SLCS flow is classified as Type D, Category 2. The specified range is 0 to 110% design flow. The stated purpose is "to monitor operation."

Discussion: The SLCS on Clinton is manually initiated. Flow measuring devices were not provided for this system. The pump discharge header pressure, which is indicated in the control room, will indicate SLCS pump operation. Besides the discharge header pressure observation, the operator can verify the proper functioning of the SLCS by monitoring the following:

1. The decrease in the level of the SLCS storage tank.

2. The reactivity change in the reactor as measured by neutron flux and boron concentration (the latter by sampling).

3. The SLCS pump motor contactor indicating lights.

4. Squib valve continuity indicating lights.

The use of these indications is believed to be a valid alternative to SLCS flow indication.

12. Variable D18 - SLCS Storage Tank Level

Issue definition: The measurement of SLCS storage tank level is classified as Type D, Category 2. The specified range is top to bottom. The stated purpose is "to monitor operation."

Discussion: The Category 2 requirement for the SLCS storage tank level instrumentation is not considered appropriate for the following reasons:

TABLE 7.1-13 (Cont'd)

Notes (Cont'd)

1. The current design basis for the SLCS assumes a need for an alternative method of reactivity control without a concurrent loss of coolant accident or high energy line break. The environment in which the SLCS instrumentation must work is, therefore, a "mild" environment for qualification purposes.

2. The current design basis for the SLCS recognizes that the system has a classification that is less than the safety related classification of the reactor protection system and the engineered safeguards systems.

Based on a graded approach to safety, this variable is more appropriately considered a Category 3 variable.

13. Variable D22 - Cooling Water Flow to ESF Components

Issue definition: The measurement of cooling water flow to ESF components is classified as a Type D variable, Category 2. The specified range is 0 to 110% design flow. The stated purpose is "to monitor operation."

Discussion: For Division 1 and Division 2 cooling water, Clinton will utilize the flow transmitters on the shutdown service water supply to the Division 1 and Division 2 RHR heat exhangers, in conjunction with proper valve alignment, as indication of flow to the Division 1 and Division 2 ESF system components. For Division 3, Clinton will utilize shutdown service water pump discharge pressure, in conjunction with the shutdown service water pump 1SX01PC performance curves and proper valve alignment, as indication of flow to the Division 3 ESF system components.

14. Variable D25(H) - DC Bus Current

Issue definition: The measurement of DC bus current is classified as a Type D variable, Category 2. The required range is stated as "plant specific".

Discussion: Clinton instrumentation for Division 1,2 and 4 has qualified bus current measurements with ranges of -750 to +750 amps (Division 1 and 2) and -300 to +300 amps (Division 4) in the control room.

15. Variable E6 - Radiation Exposure Meters

Discussion: Revision 3 of Regulatory Guide 1.97 states "it is unlikely that a few fixed-station area monitors could provide sufficiently reliable information to be of use in detecting releases from unmonitored containment release points...the decision to install such a system is left to the licensee." Revision 3 of the Regulatory Guide 1.97 deleted this parameter from Table 2 of the Regulatory Guide. Clinton will not be implementing this parameter.

TABLE 7.1-13 (Cont'd)

Notes (Cont'd)

16. Variable C5 - Primary Containment Area Radiation Variable
E1 - Primary Containment Area Radiation - High Range

Issue definition: Reg. Guide 1.97 Rev. 3 Table 1 Section 10 (Servicing, Testing, and Calibration) states the "periodic checking, testing, calibration and calibration verification should be in accordance with the applicable portions of Reg. Guide 1.118, 'Periodic Testing of Electric Power and Protection Systems,' pertaining to testing of instrument channels." Reg. Guide 1.118 Rev. 2 endorses, with supplements to IEEE Std. 338-1977, "Criteria for the Periodic Testing of Nuclear Power Generating Station Safety Systems." IEEE 338-1977 Section 5.(5) states "sensors should be accessible and, where practicable, installed such that their calibration can be verified in place."

Discussion: The Clinton design for Primary Containment Area Radiation high-range gamma radiation monitoring utilizes two drywell and two containment high-range gamma radiation monitors. This configuration consists of two redundant divisions which are physically and electrically independent. Each division provides the capability of monitoring and indicating high-range radiation levels in the drywell and the containment.

Each radiation monitor consists of a radiation detector and a readout device. The readout devices are located on Main Control Room panels and are provided with indicators with a range of 1 to 10^7 R/hr. Each monitor has a high gamma radiation level alarm, an alert gamma radiation level alarm, and a system failure alarm.

The containment radiation detectors are vertically mounted at elevation 834 feet (6 feet above the refueling floor) and are located approximately 180° circumferentially from each other. The drywell radiation detectors are horizontally mounted inside thin-walled penetration sleeves at approximately elevation 790 feet. The two drywell detectors are located about 180° circumferentially from each other. The nearest permanent platform inside the drywell is approximately 20 feet below the penetration sleeves. The location of the detectors in the drywell, and the presence of the sleeve will not permit in-situ calibration of these detectors.

Clinton Power Station proposes to perform the radiation calibration of the Drywell High-Range Gamma Radiation Monitors locally on the containment side of the penetration sleeve. The detectors will be removed from the sleeves by taking off the 16-inch diameter sleeve covers. Electrical cables connected to the detectors pass through a slot in the covers. This will enable removal of the covers and detectors without disconnecting any electrical cables. The radiation calibrations will be performed for at least one decade below 10 R/hr with the detector in the horizontal position using a field calibrator. This calibrator will also be used to calibrate the Containment High-Range Gamma Radiation Monitors in-situ, thus providing a consistent method of calibrating both sets of detectors. The design of the calibrator allows the calibrations to be performed in a manner which incorporates ALARA principals and which is radiologically safe.

Electric calibration over the detector's range will be performed with the detectors in their normal (in sleeve) position. The use of a fixed geometry calibrator allows for the radio-active calibration to be repeated without any significant alteration of the test conditions.

TABLE 7.1-13 (Cont'd)

Notes (Cont'd)

The accuracy of the monitor response when it is in its normal (in-situ) position can be determined by combining the results of the electronic calibration, the radioactive calibration and correction factors which were previously determined to take the sleeve effects into account.

Calibration in the manner described will permit consistency in methods. Coupled with the correction factors for the drywell monitors, this method will provide consistency in instrument readout and enable performance of the calibrations in an ALARA manner.

17. Variable C13 - Containment Effluent Radioactivity - Noble Gases
Variable C15 - Effluent Radioactivity - Noble Gases
Variable E4(E) - Noble Gases and Vent Flow Rate – Common
Plant Vent or Multipurpose Vent Discharging Any of the Above Releases

Issue definition: Reg. Guide 1.97 Rev. 3 Note 9 states that "effluent radioactivity may be expressed in terms of concentrations of Xe-133 equivalents, in terms of concentrations of any noble gas nuclides, or in terms of integrated gamma MeV per unit time." The ranges put forth within Reg. Guide 1.97 Rev. 3 are in terms of µCi/cc.

Discussion: All station radioactive noble gas effluent is routed through either the HVAC or SGTS stack.

For variable C13, monitoring is provided by Category 3 instrumentation, the HVAC stack radiation monitors, 0PR01S and 0PR02S, and the SGTS exhaust radiation monitors, 0PR03S and 0PR04S. Each monitor has a low range noble gas channel using a beta scintillator detector and a mid-range noble gas channel using a GM tube detector.

For variables C15 and E4(E), monitoring is provided by Category 2 instrumentation, the HVAC stack high-range radiation monitor, 0PR012S, and the SGTS exhaust high-range radiation monitor, 0PR08S. Each monitor has a mid-range noble gas channel and a high range noble gas channel. Each channel has a GM tube detector.

The sensitivity and range of each channel depend on the composition of the noble gas effluent. The range lower limit also depends on the background radiation level. Sensitivity and range have been evaluated for the expected normal effluent composition (final column of Table 11.3-9) and for effluent compositions calculated for a design basis LOCA. It is found that three of the channels (low range noble gas for variable C13 and the mid-range and high-range noble gas for variables C15 and E4(E)) are sufficient to provide full coverage of the noble gas effluent concentration levels expected for normal and postaccident conditions. Because of the dependence of sensitivity on effluent composition, correction factors have been calculated for these three channels to enable conversion of monitor output in µCi/cc of normal expected effluent mix to units of either actual µCi/cc or Xe-133-equivalent µCi/cc.

18. Variable E5 - Particulates and Halogens (Sample, with Onsite Analysis Capability

Issue definition: Reg. Guide 1.97 Rev. 3, Table 2, Note 12 states "continuous collection of representative samples followed by onsite laboratory measurements of samples for

TABLE 7.1-13 (Cont'd)

Notes (Cont'd)

radiohalogens and particulates." It is further stated within this note that "collection of representative samples means obtaining the best samples practicable given the exigencies that attend the accident environment; line losses or line deposition should be empirically predetermined and appropriate loss correction factors should be applied."

Discussion: Illinois Power Company and its Architect/Engineer performed an investigation for determining iodine and particulate line loss correction factors. Research has been performed to determine the approach utilized by other nuclear stations to develop correction factors. In addition, a recent Electric Power Research Institute (EPRI) workshop on this subject was attended.

Iodine transmission factors have been calculated for Clinton Power Station's Accident Range Effluent Radiation Monitors using the method outlined in a paper written by M. T. Kabat "Deposition of Airborne Radioiodine Species on Surfaces of Metals and Plastics" which was presented at the 17th Department of Energy (DOE) Air Cleaning Conference. This article describes a method for calculating potential sample line losses for various iodine chemical species. One assumption used in estimating the iodine line loss correction factors involves the anticipated iodine chemical species distribution. No credible reference exists which quantifies the distribution of radioiodine chemical species expected during accident conditions.

Another problem encountered in determining iodine losses is the assumption regarding the humidity of the stack effluents and samples. The humidity of stack effluents will depend upon and will vary widely with the accident scenario that is assumed to have taken place. Kabat's paper presents data for only two cases; one with sample gases at 5% humidity and another at 97% humidity. Clinton's Accident Range Effluent Radiation Monitor sample lines are heat traced to prevent the sample gases from cooling below the dewpoint and condensing. The heat tracing should keep the samples at relatively low humidity conditions; however, the exact sampling conditions are not known and may vary widely depending upon the accident scenario.

Other problems encountered in determining iodine loss correction factors involve phenomena such as resuspension of deposited iodine as well as chemical species conversion within the sample lines. These phenomena are considered important and may have a significant effect on the actual amount of radioiodine which is deposited in the sample lines.

Particulate transmission factors have also been calculated for Clinton's Accident Range Effluent Radiation Monitors. The calculation was based on methods described in ANSI N13.1-1969 (Guide to Sampling Airborne Radioactive Materials in Nuclear Facilities). Similar to the problem of determining iodine chemical species present after an accident, there are uncertainties regarding the particle size distribution and density in the sample lines which have a significant impact on the results of the calculations.

Another problem with computing particulate line loss correction factors is the assumed distribution of radioactivity on the particles which are released. For example, if it is assumed that a major portion of the radioactivity is contained on large particles, a large correction factor (used because most of the large sized particles will be lost in the

TABLE 7.1-13 (Cont'd)

Notes (Cont'd)

sample lines due to gravity settling) will not be realistic because most of Clinton's postaccident effluents will be filtered through High Efficiency Particulate Air (HEPA) and charcoal filters before being released.

The results of our calculations show that HOI and CH_3I have very high transmission factors while I_2 has a relatively low transmission factor. High humidity conditions will not significantly affect the transmission of HOI and CH_3I, but do, however, significantly reduce the transmission of I_2. The calculations also show that intermediate sized particles have a high transmission factor while small and large particles have a low transmission factor. Determining exact iodine particulate line loss correction factors from these calculations is difficult due to the large number of uncertain factors which affect the results.

IP has researched what other nuclear stations have done in this area and has concluded that there currently is no clear, technically sound and cost effective method of performing tests to determine actual radioiodine and particulate line loss correction factors. IP participated in and supported a visit from an NRC consultant, Battelle Laboratories, who is attempting to gather information from various utilities regarding sampling system design and methods of accounting for radioiodine losses in sample lines.

Illinois Power Company proposed to delay an empirical determination of sampling line losses until the ongoing industry and/or NRC research programs develop reasonable quantitative data regarding postaccident radioiodine chemical species and particulate size distribution and density as well as necessary testing acceptance criteria. In the interim, a conservative transmission factor will be applied to all non-noble gas releases.

19. Variables B3 and E13(C) - Accident Sampling Capability - Reactor Coolant Boron Content

The boron analysis range on a direct measurement is 0.5 to 6 ppm. In the event of a worst case accident, a diluted (1000:1) sample is required to be analyzed for boron content. The CPS Technical specifications required concentration upon injection of boron into the reactor pressure vessel is 825 ppm; this quantity falls well within the site laboratory capabilities when using a 1000 to 1 diluted sample. The range commitment for post accident boron measurement is 500-1500 ppm.

20. Variable E13(D) - Accident Sampling Capability – Reactor Coolant Chloride Content

The chloride analysis will be carried out at an offsite laboratory within four (4) days of an accident. In the event sample activity is ≤ 1/1000 of the worst case activity, this analysis can also be performed onsite in the station laboratory.

21. Variable C-13 - Containment Effluent Radioactivity - Noble Gasses Variable C15 - Effluent Radioactivity - Noble Gases Variable E4(E) - Noble Gases and Vent Flow Rates - Common Plant Vent or Multipurpose Vent Discharging Any of the Above Releases

The range is the nominal range based on a background of 0.5 mR/hr and the composition of total annual expected gaseous releases specified in 11.3-9.

TABLE 7.1-13 (Cont'd)

Notes (Cont'd)

22. Variable E13 - Accident Sampling Capability - Reactor Coolant

Clinton Power Station has received authorization for an exception to RG 1.97 to not include sump samples in assessing Reactor Status. CPS is committed to the Post-Accident Sample System for mitigating and estimating core damage. (Note: License Amendment 155 eliminated the requirements for PASS.)

Variable E13(E) - Dissolved H_2 or Total Gas

This variable is not required for CPS to mitigate or estimate core damage therefore, with public safety and personnel radiation exposures considered, CPS does not obtain these extremely radioactive samples.

Variable E13(F) - Dissolved O_2

This variable is not required for CPS to mitigate or estimate core damage. Therefore, with public safety and personnel radiation exposures considered, CPS does not obtain these extremely radioactive samples.

Variable E13(B) Gamma Spectrum

CPS will determine the concentration of those radionuclides which can be used by CPS to estimate core damage. Specifically, those radionuclides are I-131 and Cs-137.

23. Variable E14 - Accident Sampling Capability - Containment Air

CPS is committed to the Post-Accident Sampling System, Containment Air Sampling Capability for mitigating and estimating core damage.

Variable E14(A) - H_2 Content and Variable E14(B) O_2 content

CPS utilizes two separate 1E powered continuous H_2 and O_2 monitoring systems which are described under Variable A6. This capability exceeds the requirements for post-accident H_2 and O_2 sampling. Therefore, CPS will rely on these capabilities.

Variable E14(C) - Gamma Spectrum

CPS will determine the concentrations of those radionuclides which can be used by CPS to estimate core damage. Specifically,those radionuclides are Xe-133 and Kr-88.

TABLE 7.1-14
SUMMARY INFORMATION FOR EMERGENCY PROCEDURE GUIDELINE INSTRUMENTATION

	PARAMETER	ENVIRONMENTAL QUALIFICATION	SEISMIC QUALIFICATION	QUALITY ASSURANCE	REDUNDANCY	RANGE
1.	RPV Pressure	Will comply with 10 CFR 50.49	Will comply with Reg. Guide 1.100	Yes	Two channels	0-300 psig
2.	Primary Containment Pressure	Will comply with 10 CFR 50.49	Will comply with Reg. Guide 1.100	Yes	Two channels	40 to 80 psig
3.	Suppression Pool Level	Will comply with 10 CFR 50.49	Will comply with Reg. Guide 1.100	Yes	Two channels	23 ft 4 in to 70 ft
4.	Containment Atmosphere Bulk Temperature	Will comply with 10 CFR 50.49	Will comply with Reg. Guide 1.100	Yes	Two channels	60° to 350° F
5.	Secondary Containment Area Temperature	Will comply with 10 CFR 50.49 (sensors only)	Will comply with Reg. Guide 1.100	Yes	One channel	50° to 300° F
6.	Secondary Containment Water Level	No	Will comply with Reg. Guide 1.100	No	One channel	As required

TABLE 7.1-14 (Cont'd)

SUMMARY INFORMATION FOR EMERGENCY PROCEDURE GUIDELINE INSTRUMENTATION (continued)

	PARAMETER	POWER SUPPLY	CR DISPLAY	TSC LOCATION	EOF LOCATION	REMARKS
1.	RPV Pressure	1E	Recorders both channels	No	No	
2.	Primary Containment Pressure	1E	Recorders both channels	No	No	
3.	Suppression Pool Level	1E	Indicators both channels	No	No	
4.	Containment Atmosphere Bulk Temperature	1E	Recorders both channels	Yes	Yes	
5.	Secondary Containment Area Temperature	Station Power	Recorders	No	No	
6.	Secondary Containment Water Level	Station Power	Alarms	No	No	

TABLE 7.1-15
REGULATORY GUIDE 1.47 BYPASSES AND INOPERATIVE INDICATION

	SYSTEM	AUTOMATIC AT SYSTEM LEVEL OF LOSS OF SYSTEM	AUTOMATIC AT SYSTEM LEVEL WHEN AUXILIARY SYSTEM(S) LOST	AUTOMATIC INDICATION TRAIN OR COMPONENT	MANUAL INITIATION OF BYPASS INDICATION
1.	B21-ADS	ADS DIV. 1, 2 OUT OF SERVICE (A)*	DIV. 1, 2 ADS/SRV VALVE POWER FAILURE (L)**(1)***	DIV. 1, 2 ATM IN CAL OR GROSS FAILURE (L) (1) DIV. 1, 2 ATM OUT OF FILE OR POWER LOSS (L) (1) DIV. 1, 2 AUTO, PULSE TEST FAULT (L) (1)	DIV. 1, 2 SAFETY RELIEF VALVE CONTROL SWITCH IN OFF POSITION (A) DIV. 1, 2 ADS OUT OF SERVICE SWITCH (L) (1)
2.	B21NS[4]	DIV. 1, 2 SYSTEM OUT OF SERVICE (A)	DIV. 1, 2, 3, 4 POWER SUPPLY FAILURE (L) (1) OUTBOARD, INBOARD VALVE POWER LOSS OR THERMAL OVERLOAD (L) (1)	DIV. 1, 2, 3, 4 ATM IN CAL OR GROSS FAILURE (L) (1) DIV. 1, 2, 3, 4 LOGIC CARD OUT OF FILE OR POWER LOSS (A) DIV. 1, 2, 3, 4 TRIP UNIT OUT OF FILE (A)	MAIN CONDENSER LOW VAC BYPASS (A) DIV. 1, 2, 3, 4 SENSOR BYPASS (A) OUTBOARD, INBOARD ISOLATION SYSTEM OUT OF SERVICE SWITCH (L) (1) DIV. 1, 2, 3, 4 AUTO. PULSE TEST FAULT (L) (1) OUTBOARD, INBOARD VALVES IN TEST (L) (1)
3.	C41-SLC	STANDBY LIQUID SYSTEM A, B OUT OF SERVICE (A)	LOSS OF CONTINUITY TO SQUIB VALVE A, B OR POWER LOSS (L) (1) C41-C001A,B OR F001A,B OVERLOAD TRIP OR POWER LOSS (L)	C41-F001A,B IN TEST STATUS (L) STANDBY LIQUID PUMP A, B AUTO. TRIP (A) TEST TANK OUTLET VALVE OPEN, CLOSED (L)	SLC SYSTEM A, B MANUALLY OUT OF SERVICE (L) (1)

* (A) Annunciator
** (L) Lamp
*** (1) System Out of Service Annunciator

TABLE 7.1-15 (Cont'd)
REGULATORY GUIDE 1.47 BYPASSES AND INOPERATIVE INDICATION

	SYSTEM	AUTOMATIC AT SYSTEM LEVEL OF LOSS OF SYSTEM	AUTOMATIC AT SYSTEM LEVEL WHEN AUXILIARY SYSTEM(S) LOST	AUTOMATIC INDICATION TRAIN OR COMPONENT	MANUAL INITIATION OF BYPASS INDICATION
4.	C51-NMS START-UP RANGE			IRM UPSCALE OR INOP. RPS CHANNELS A, B, C, D (A) SRM UPSCALE ALARM OR INOP. (A)	SINGLE CHANNEL MANUAL BYPASS INDICATION FOR SRM AND IRM (L)
5.	C51-NMS PWR RANGE		APRM CH A, B, C, D	APRM CHANNEL A, B, C, D UPSCALE TRIP OR INOP. (L, A)	SINGLE CHANNEL BYPASS
			UPSCALE TRIP OR INOP. (L,A)		BYPASS INDICATION (L)
6.	C71-RPS	RPS A, B, OUT OF SERVICE (A)	NSPS INVERTER SOURCE TRANSFERRED TO ALTERNATOR SOURCE (A) NSPS INVERTER TROUBLE (A) RPS INVERTER SOLENOID TROUBLE (A)	TURBINE CONTROL VALVE FAST CLOSURE AND STOP VALVE TRIP BYPASS (A) DIV. 1, 2, 3, 4 RPS ATM IN CAL OR GROSS FAILURE (L) DIV. 1, 2, 3, 4 TRIP OUT OF FILE OR POWER FAILURE (A) DIV. 1, 2, 3, 4 LOGIC CARD OUT OF FILE (A) DIV. 1, 2, 3, 4 AUTO. PULSE TEST FAULT (L)	DIV. 1, 2, 3, 4 NS[4]/RPS SENSOR CHANNEL BYPASS (A) DIV. 1, 2, 3, 4 DISCHARGE VOL. HIGH-WATER TRIP BYPASS (A) DIV. 1, 2, 3, 4 MAIN STEAM LINE CLOSURE SCRAM BYPASS OR NOT IN RUN MODE (A) DIV. 1, 2, 3, 4 RPT BYPASS (A)
7.	D17-PRMS			DIV. 1 or 4, 2 or 3 MAIN STEAM LINE HI-HI RAD OR INOP. (A)	

TABLE 7.1-15 (Cont'd)
REGULATORY GUIDE 1.47 BYPASSES AND INOPERATIVE INDICATION

	SYSTEM	AUTOMATIC AT SYSTEM LEVEL OF LOSS OF SYSTEM	AUTOMATIC AT SYSTEM LEVEL WHEN AUXILIARY SYSTEM(S) LOST	AUTOMATIC INDICATION TRAIN OR COMPONENT	MANUAL INITIATION OF BYPASS INDICATION
8.	E12-RHR	RHR A, B, C, OUT OF SERVICE (A)	125 Vdc DIV. 1, 2, LOGIC POWER FAILURE (L)(1) POWER LOSS OR THERMAL OVERLOAD OF ANY VALVE (L)(1)	RHR A,B,C LINE BREAK (L)(1) DIV. 1,2 LOGIC CARD OUT OF FILE OR POWER LOSS (L)(1) AUTO. PULSE TEST RHR A,B,C FAULT (L)(1) RHR DIV. 1,2 ATM OUT OF FILE OR POWER LOSS (L)(1) RHR DIV. 1,2 ATM IN CAL OR GROSS FAILURE (L)(1) SUCTION VALVE F004A, B, F105 CONTROL SW IN CLOSE POSITION OR VALVE FULLY CLOSED (L)(1) F024A, B, IN MANUAL OVERRIDE (A) F042A, B, C IN MANUAL OVERRIDE (A) PUMP A, B, C IN MANUAL OVERRIDE (A) PUMP A, B, C AUTO START FAILURE (A) PUMP A, B, C AUTO TRIP (A) DIV. 2 SAFETY ASSOC. ATM TROUBLE (A) B/C WATER LEG PUMP AUTO. TRIP (A) PUMP A, B, C BREAKER NOT IN OPERATING POSITION (L)(1)	RHR A, B, C, OUT OF SERVICE SWITCH (L)(1)
					MANUALLY INITIATED A, B, C, MOTOR OPERATION VALVES IN TEST STATUS (L)(1)

TABLE 7.1-15 (Cont'd)
REGULATORY GUIDE 1.47 BYPASSES AND INOPERATIVE INDICATION

	SYSTEM	AUTOMATIC AT SYSTEM LEVEL OF LOSS OF SYSTEM	AUTOMATIC AT SYSTEM LEVEL WHEN AUXILIARY SYSTEM(S) LOST	AUTOMATIC INDICATION TRAIN OR COMPONENT	MANUAL INITIATION OF BYPASS INDICATION
9.	E21-LPCS	LPCS SYSTEM OUT OF SERVICE (A)	125 Vdc LOGIC POWER LOSS (L)(1) LOSS OF POWER OR OVERLOAD OF ANY LPCS VALVE (L)(1)	DIV. 1 SAFETY ASSOC. ATM TROUBLE (A) PUMP AUTO. TRIP (A) WATER LEG PUMP AUTO. TRIP (A) PUMP AUTO. START FAILURE (A) PUMP C001 IN MANUAL OVERRIDE (A) INJECTION VALVE IN MANUAL OVERRIDE (A) LOGIC CARD OUT OF FILE POWER LOSS (L)(1) ATM OUT OF FILE OR POWER LOSS (L)(1) ATM IN CAL OR GROSS FAILURE (L)(1) AUTO. PULSE TEST FAULT (L)(1) LPCS PUMP MOTOR BREAKER NOT IN OPERATING CONDITION OR POWER LOSS (L)(1)	LPCS OUT-OF-SERVICE SWITCH (L)(1) MANUALLY INITIATED MOTOR OPERATION VALVES IN TEST STATUS (L)(1)
10.	E22-HPCS	HPCS SYSTEM OUT OF SERVICE (A)	LOGIC POWER FAILURE (L)(1) POWER LOSS OR OVERLOAD OF ANY HPCS VALVE (L)(1)	F004 IN MANUAL OVERRIDE (A) F015 IN MANUAL OVERRIDE (A) HPCS DIV. 3, 4 LOGIC CARD OUT OF FILE OR POWER LOSS (L)(1) HPCS DIV. 3, 4 ATM OUT OF FILE OR POWER LOSS (L)(1)	HPCS OUT-OF-SERVICE SWITCH (L)(1) MANUALLY INITIATED MOTOR OPERATION VALVES IN TEST (L)(1)

TABLE 7.1-15 (Cont'd)
REGULATORY GUIDE 1.47 BYPASSES AND INOPERATIVE INDICATION

	SYSTEM	AUTOMATIC AT SYSTEM LEVEL OF LOSS OF SYSTEM	AUTOMATIC AT SYSTEM LEVEL WHEN AUXILIARY SYSTEM(S) LOST	AUTOMATIC INDICATION TRAIN OR COMPONENT	MANUAL INITIATION OF BYPASS INDICATION
10.	E22-HPCS (Cont'd)		HPCS NOT READY FOR AUTOSTART OR BREAKER IN LOWER POSITION (A) 125 Vdc TROUBLE (A) DIV. 3 TRIPPING CONTROL POWER (A)	HPCS DIV. 3,4 ATM IN CAL OR GROSS FAILURE (L)(1) AUTO. PULSE TEST FAULT (L)(1) RCIC STORAGE TANK LOW LEVEL (A) SAFETY ASSOC. ATM TROUBLE (A) HPCS WATER LEG PUMP AUTO. TRIP (A) GROUND HPCS SYS. (A) HPCS PUMP AUTO TRIP (A) HPCS PUMP AUTO. START FAILURE (A) HPCS LINE BREAK (L)(1) PUMP SUCTION PRESSURE ABNORMAL (A) HPCS PUMP C001 IN MANUAL OVERDRIVE (A) OVERCURRENT HPCS PUMP MOTOR (A) TROUBLE BATTERY CHARGER 1C(A) TRIP/LOCKOUT DG (A) DG OVERCURRENT (A) UNDERVOLTAGE HPCS 480-V BUS 1C (A) DG TRIP (A) TRANSFER BLOCKED 4160-V BUS 1C1 (A)	DG IN MAINTENANCE (A)
11.	E31-LDS		120 Vac LOGIC A, B POWER FAILURE (A) ISOLATOR CARD POWER LOSS (A) 120 Vac RPS LOGIC C, D, POWER FAILURE (A)	ISOLATOR CARD OUT OF FILE (A) RCIC STEAM TUNNEL TIMER BYPASS (A) RWCU HI DIFF FLOW IN TIMER BYPASS (A)	LOGIC A,B IN BYPASS (A)

TABLE 7.1-15 (Cont'd)
REGULATORY GUIDE 1.47 BYPASSES AND INOPERATIVE INDICATION

	SYSTEM	AUTOMATIC AT SYSTEM LEVEL OF LOSS OF SYSTEM	AUTOMATIC AT SYSTEM LEVEL WHEN AUXILIARY SYSTEM(S) LOST	AUTOMATIC INDICATION TRAIN OR COMPONENT	MANUAL INITIATION OF BYPASS INDICATION
12.	E32-MISV LCS	MSIV INBOARD, OUTBOARD SYSTEM INOP. (A)	INBOARD, OUTBOARD SYSTEM LOSS OF ISOLATOR POWER (A) INBOARD, OUTBOARD VALVE MCC LOSS OF POWER OR OVERLOAD (L)(1) INBOARD, OUTBOARD BLOWER MCC LOSS OF POWER OR OVERLOAD (L)(1) INBOARD HEATER MCC LOSS OF POWER OR OVERLOAD (L)(1)	INBOARD, OUTBOARD TRIP UNIT IN CALIB OR GROSS FAILURE (L)(1) INBOARD, OUTBOARD TRIP UNIT OUT OF FILE OR POWER FAILURE (L)(1)	MISV INBOARD OUTBOARD SYSTEM INOP. (SWITCHES) (L)(1) INBOARD, OUTBOARD VALVE TEST (L)(1)
13.	E51-RCIC	RCIC OUT OF SERVICE (A)	RCIC 124 Vdc LOGIC POWER FAILURE (L)(1) RCIC MOTOR-OPERATED VALVE OVERLOAD OR POWER LOSS (L)(1)	ATM IN CAL OR GROSS FAILURE (L)(1) ATM OUT OF FILE OR POWER LOSS (L)(1) AUTO. PULSE TEST FAULT (L)(1) LOGIC CARD OUT OF FILE OR POWER LOSS (L)(1) RCIC STORAGE TANK WATER LEVEL LOW (A) RCIC VACUUM BREAKER ISOLATION VALVE NOT FULL OPEN (A) RCIC COMPRESSOR AUTO START FAILURE (A) F064 CS IN CLOSE POSITION OR VALVE NOT FULL OPEN (L)(1) F068 CS IN CLOSE POSITION OR VALVE NOT FULL OPEN (L)(1) F063 CS IN CLOSE POSITION OR VALVE NOT FULL OPEN (L)(1) RCIC TURBINE TRIP (A) RCIC WARM-UP ISOLATION VALVE NOT FULLY CLOSED (A)	OUT-OF-SERVICE SWITCH (L)(1) MOTOR-OPERATED VALVES IN TEST STATUS (L)(1) RCIC ISOLATION RESET SWITCH IN RESET POSITION (A)

7.2 REACTOR PROTECTION (TRIP) SYSTEM - INSTRUMENTATION AND CONTROLS

7.2.1 Description

7.2.1.1 System Description

7.2.1.1.1 Identification

The reactor protection (trip) system (RPS) includes the power distribution panels, logic, load drivers, power supplies, sensors trip modules, bypass circuitry, and switches that cause rapid insertion of control rods (scram) to shut down the reactor. It also includes outputs to the performance monitoring system and annunciators, although these latter two system are not part of the reactor protection system. Trip signals are received from many diverse reactor and plant systems.

7.2.1.1.2 Classification

The RPS is classified as Safety Class 2, Seismic Category I, and Quality Group B (Electric Safety Class 1E).

7.2.1.1.3 Power Sources

The RPS utilizes three types of power; 120 Vac for the scram pilot valve solenoids and neutron monitoring system; 125 Vdc power for MSIV and turbine control and stop valve limit switches and the backup scram valve solenoids, and low voltage dc for the solid state logic.

7.2.1.1.3.1 120 Vac

Four uninterruptible NSPS buses supply Class 1E 120 Vac power to the four logic divisions of the Reactor Protection System. A NSPS bus is normally fed via a DC to AC inverter, the inverter being fed by a 125 Vdc divisional charger with a floating battery. In the unlikely event of an inverter failure/power loss, the NSPS bus automatically transfers by the use of a solid state transfer switch, to an alternate 120 Vac source derived from a 480 Vac to 120 Vac transformer supply. Also, 120V AC can be supplied to the Division A and B NSPS buses by manual transfer to an inverter maintenance bypass feed. “The definition of a divisional inverter failure as used in the USAR is that the inverter detects abnormal conditions and performs a function. This function is to transfer to its alternate power source. The four divisional inverters automatically switch to the alternate power source for internal inverter problems and for handling fault clearing and inrush current demands. The transfer of the divisional inverters to their alternate source will occur if the alternate source is either energized or deenergized.”

Two RPS busses (A&B) supply uninterruptible non-Class 1E 120 Vac power to the RPS “A” and “B” scram solenoids and the MSIV “A” and “B” solenoids. Each RPS bus is normally fed via a DC to AC inverter with the inverter fed by a non-Class 1E battery charger with a floating battery. During maintenance or inverter failure or power loss, a manual bypass switch may be used to transfer the RPS bus to an alternate 120 Vac source from a Class 1E 480/120V transformer. See Figures 7.2-9 and 7.2-10 and Drawing E02-1RP99.

7.2.1.1.3.2 125 Vdc

The 125 Vdc is provided by the four divisional batteries. Batteries are sized to supply shutdown loads for a minimum of four hours without the chargers operating.

7.2.1.1.3.3 DC Logic Power

DC logic power consists of eight 24 Vdc supplies (2 per division) and eight 12 Vdc supplies (2 per division). The dc supplies are powered from four 120 Vac NSPS buses. (See Subsection 7.2.1.1.3.)

7.2.1.1.4 Equipment Design

7.2.1.1.4.1 General

The RPS instrumentation is divided into sensor (instrument) channels, trip logic divisions, and actuator output logic divisions.

There are four sensor channels for each variable, although more than one sensor per variable may provide inputs to each trip channel. The sensor trip channels are designated as A, B, C and D, or divisions 1, 2, 3, and 4. The sensor trip channels are combined into a two-out-of-four logic using isolation modules to assure that no single failure can prevent the required safety action from the remainder of the system.

There are four trip logic divisions, which are designated as divisions 1, 2, 3 and 4. The four actuator logics are also designated as division 1, 2, 3, and 4.

Each trip logic division 1 through 4 provides output signals to both scram pilot valve solenoids in rod groups 1, 2, 3, and 4 via the four Actuator Logics.

During normal operation, all sensor and logic devices essential to safety are as shown in Figures 7.2-5 and 7.2-6.

Figure 7.2-2 summarizes the RPS signals that cause a scram.

The functional arrangement of sensors and channels that constitutes a single logic is shown in Figure 7.2-3. When a trip channel sensor signal exceeds the set point of the analog comparator trip module (ATM) the output changes state. The trip logics are unaware of the signal because the necessary two out of four coincidence is not met. When the signals of two or more trip channels of the same variable exceed the set point, the trip and actuator logics deenergize all scram pilot valve solenoids.

There is one scram pilot valve with two solenoids and two scram valves for each control rod, arranged as shown in Drawing M05-1078, Sheet 3. Each scram pilot valve is solenoid operated, with the solenoids normally energized. The scram pilot valves control the air supply to the scram valves for each control rod. With either scram pilot valve solenoid energized, air pressure holds the scram valves closed. The scram valves control the supply and discharge paths for control rod drive water. As shown in drawing E02-1RP99, scram pilot valves for each group are controlled by actuator logics composed of signals from all four division logics.

When any two-out-of-four actuator logics are tripped, air is vented from the scram valves and allows control rod drive water to act on the control rod drive piston. Thus, all control rods are scrammed. The water displaced by the movement of each rod piston is exhausted into a scram discharge volume.

To restore the RPS to normal operation following any single actuator logic trip or a scram, the actuators must be reset manually. After a 10-second delay, reset is possible only if the conditions that caused the scram have been cleared. The actuator logics are reset by operating switches in the main control room.

There are two dc solenoid operated backup scram valves that provide a second means of controlling the air supply to the scram valves for all control rods.

When the solenoid for either backup scram valve is energized, the backup scram valves vent the air supply for the scram valve. This action initiates insertion of any withdrawn control rods regardless of the action of the scram pilot valves. The backup scram valves are energized (initiate scram) when any two-out-of-four Actuator Logics are tripped.

To prevent the potential consequences of a postulated anticipated transient without scram (ATWS) event, a non-safety related alternate rod insertion (ARI) subsystem is provided as part of the ATWS system and is described in Subsection 7.7.1.25.1.

7.2.1.1.4.2 Initiating Circuits

The RPS scram functions, shown in Figure 7.2-2, are discussed in the following paragraphs.

(1) Neutron Monitoring System-NMS (See Figure 7.2-4)

Neutron monitoring system instrumentation is described in Section 7.6. The neutron monitoring system channels are considered to be part of the neutron monitoring system; however, the neutron monitoring system logics provide inputs to the RPS. Each RPS IRM logic receives signals from two IRM channels, and each RPS APRM logic receives signals from one APRM channel. The position of the reactor mode switch determines which input signals will affect the output signal from the logic.

The neutron monitoring system logics are arranged so that failure of any one logic cannot prevent the initiation of a high neutron flux scram. There are four neutron monitoring system logics associated with the RPS. Each RPS logic receives inputs from either one SRM, APRM, or two IRM channels.

High-high trip inputs from each SRM are combined to produce a non-coincident reactor trip through the automatic scram logic which is permitted by the removal of four shorting links.

a. IRM System Logic

The IRMs monitor neutron flux between the upper portion of the SRM range to the lower portion of the APRM range. The IRM detectors can be positioned in the core from the control room. The detectors are inserted into the core for a reactor startup and are withdrawn after the reactor reaches a predetermined power level within the power range. The IRM is able to generate a trip signal that

can be used to prevent fuel damage resulting from abnormal operational transients that occur while operating in the intermediate power range.

The IRMs are divided into four groups of IRM channels arranged in the core as shown in drawing E02-1NR99. Two IRM channels are associated with each one of the four trip channels of the RPS. Two IRM channels and their trip auxiliaries from each group are installed in each separate NMS cabinet. The arrangement of IRM channels allows the two IRM channels in each group (or one RPS trip channel) to be bypassed without compromising the intermediate range neutron monitoring function.

Each IRM channel includes four trip circuits as standard equipment. One trip circuit is used as an instrument trouble trip. It operates on three conditions: (1) when the high voltage drops below a preset level, (2) when one of the modules is not plugged in, or (3) when the OPERATE-CALIBRATE switch is not in the OPERATE position. Each of the other trip circuits are specified to trip if preset downscale or upscale levels are reached.

The trip functions actuated by the IRM trips are indicated in Table 7.6-4. The reactor mode switch determines whether IRM trips are effective in initiating a rod block or a reactor scram (drawing E02-1NR99). Subsection 7.7.1.2.3.2.3, “Rod Block Trip System,” describes the IRM rod block trips. With the reactor mode switch in REFUEL or STARTUP, an IRM upscale or inoperative trip signal actuates a neutron monitoring system trip of the RPS. Only one of the IRM channels must trip to initiate a NMS trip of the associated trip channel of the RPS. At least two IRM trip channels in the RPS must trip to result in a scram.

b. APRM System Logic

The APRM channels receive input signals from the LPRM channels and provide a continuous indication of average reactor power from 10 percent to greater than rated reactor power.

The APRM subsystem has redundant channels which meet industry and regulatory safety criteria. With the maximum permitted number of LPRM channels bypassed, the APRM subsystem is capable of generating a trip scram signal before the average neutron flux increases to the point that fuel damage is probable.

The trip units for the APRMs supply trip signals to the RPS and the Rod Control and Information System. Table 7.6-6 itemizes the APRM trip functions. Any one APRM can initiate a rod block, depending on the position of the reactor mode switch. Subsection 7.7.1.2, “Rod Control and Information System,” describes in detail the APRM rod block functions. The APRM upscale rod block and the simulated thermal power scram trip set points vary as a function of reactor recirculation driving loop flow. The APRM signals for upscale rod block and the thermal power scram trip are passed through a 6-second time constant circuit to simulate thermal power. A faster response time (approx. 0.09 seconds) APRM upscale trip has a fixed setpoint, not variable with recirculation flow. Any APRM upscale or inoperative trip initiates a NMS trip in the RPS. Only the trip channel associated with that APRM is affected. At least two APRM trip channels in the

RPS must trip to result in a scram. The operator can bypass the trips from one APRM in each trip system of the RPS via the divisional sensor bypass. A simplified circuit arrangement is shown in Figure 7.6-20 (APRM Block Diag.).

In addition to the IRM upscale trip, a fast response APRM neutron flux trip function with a setpoint of 15% power is active in the startup mode.

Neutron monitoring system channel operating bypasses are described in Subsection 7.2.1.1.4.4.1.

Diversity of trip initiation for unusual excursions at reactor power is provided by the Neutron Monitoring System trip signals and reactor vessel high pressure trip signals. An increase in reactor power will initiate protective action from the Neutron Monitoring System as discussed in the above paragraphs. This increase in power will cause reactor pressure to increase due to a higher rate of steam generation with no change in turbine control valve position resulting in a trip from reactor vessel high pressure. These variables are independent of one another and provide diverse protective action for this condition.

(2) Reactor Pressure

Reactor pressure is measured at four physically separated locations. An instrument sensing line from each location is routed through the drywell and terminates in the containment. One locally mounted, nonindicating pressure transmitter monitors the pressure in each instrument sensing line. Cables from these transmitters are routed to the control room. Each pressure transmitter provides a signal to a trip module in the same instrument channel. High pressure initiates a trip signal in each channel. Only the channel associated with each transmitter is affected. The physical separation and the signal arrangement assure that no single physical event can prevent a scram caused by reactor vessel high pressure. At least two instrument trip channel trips are required to cause a scram.

The environmental conditions for the RPS are described in Subsection 3.11.2. The piping arrangement of the reactor pressure sensors is shown in Drawing 796E724, “Nuclear Boiler System P&ID.”

The discussion of diversity for reactor vessel high pressure is provided in Subsection 7.2.1.1.4.5.

(3) Reactor Vessel Water Level

Reactor vessel high and low water level signals are initiated from level (differential pressure) transmitters which sense the difference between the pressure due to a constant reference column of water and the pressure due to the actual water level in the vessel. The transmitters are arranged on four sets of taps in the same way as the reactor vessel high pressure transmitters. The four pairs of instrument sensing lines terminate outside the drywell and inside the containment; they are physically separated from each other and tap the reactor vessel at widely separated points. Other systems sense pressure and level from these same instrument sensing lines. Each transmitter provides a high and low level signal to one trip channel trip module in the RPS. At least two trip channel trips are required to cause a scram. The physical separation of

redundant instruments and signal arrangement assure that no single physical event can prevent a scram due to reactor vessel low water level.

Diversity of trip initiation for breaks in the reactor coolant pressure boundary is provided by reactor vessel low water level trip signals and high drywell pressure trip signals. If a break in the primary system boundary were to occur, a volume of primary coolant would be released to the drywell in the form of steam. This release would cause reactor vessel water level to decrease and drywell pressure to increase resulting in independent protective action initiation. These variables are independent and provide diverse protective action for this condition.

The environmental conditions for the RPS are described in Subsection 3.11. The piping arrangement of the reactor vessel water level sensors is shown in Drawing 796E724, “Nuclear Boiler System P&ID.”

(4) Turbine Stop Valve

Turbine stop valve closure inputs to the reactor protection system come from valve stem position switches mounted on the four turbine stop valves. Each of the single-pole, single-throw switches opens before the valve is more than 10% closed (Analytical Limit) to provide the earliest positive indication of closure. The logic is arranged so that closure of two or more valves initiates a scram, as shown in Figure 7.2-7.

Turbine stop valve closure trip channel operating bypasses are described in Subsection 7.2.1.1.4.4.2.

Diversity of trip initiation for increases in reactor vessel pressure due to termination of steam flow by turbine stop valve or control valve closure is provided by reactor vessel high pressure and power trip signals. A closure of the turbine stop valves or control valves at steady-state conditions would result in an increase in reactor vessel pressure. If a scram was not initiated from these closures, a scram would occur from high reactor vessel pressure or power. Reactor vessel high pressure and high power are independent variables for this condition and provide diverse protective action.

The environmental conditions for the RPS are described in Subsection 3.11.

(5) Turbine Control Valve Fast Closure

Turbine control valve fast closure inputs to the RPS come from oil line pressure switches on each of four fast acting control valve hydraulic mechanisms. These hydraulic mechanisms are part of the turbine control, and they are used to effect fast closure of the turbine control valves. These pressure switches provide signals to the RPS as shown in Figure 7.2-7. If hydraulic oil line pressure is lost, a turbine control valve fast closure scram is initiated.

Turbine control valve fast closure trip channel operating bypasses are described in Subsection 7.2.1.1.4.4.2.

The discussion of diversity for turbine control valve fast closure is the same as that for turbine stop valve closure provided in Subsections 7.2.1.1.4.2(4) and 7.2.1.1.4.5.

The environmental conditions for the RPS are described in Subsection 3.11.

(6) Main Steam Line Isolation Valves

Limit switches mounted on the eight main steam line isolation valves signal main steam line isolation valve closure to the reactor protection system. Each of the valve limit switches is arranged to open before the valve is more than 15% closed (Analytical Limit) to provide the earliest positive indication of closure. To facilitate the description of the logic arrangement, the position-sensing channels for each valve are identified and assigned to reactor protection system logics as follows:

Valve Identification	Position-Sensing Channels	Feed TripTrip Logic
Main steam line A, inboard valve	F022A	Division 1
Main steam line A, outboard valve	F028A	Division 1
Main steam line B, inboard valve	F022B	Division 2
Main steam line B, outboard valve	F028B	Division 2
Main steam line C, inboard valve	F022C	Division 3
Main steam line C, outboard valve	F028C	Division 3
Main steam line D, inboard valve	F022D	Division 4
Main steam line D, outboard valve	F028D	Division 4

The arrangement of signals within the trip logic requires closing of at least one valve in two or more steam lines to cause a scram. In no case does closure of two valves in one steam line cause a scram due to valve closure. The wiring for position-sensing channels feeding the different trip channels is separated.

Main steam line isolation valve closure trip channel operating bypasses are described in Subsection 7.2.1.1.4.4.3.

Diversity of trip initiation for main steam isolation is provided by reactor vessel high pressure and power trip signals. A closure of the MSIVs at steady state conditions would cause an increase in reactor vessel pressure and power. If a scram was not initiated from MSIV closure, a scram would occur from high reactor vessel pressure or high power. These variables are independent and provide diverse protective action for this condition.

The environmental conditions for the RPS are described in Subsection 3.11.

(7) Scram Discharge Volume

Four non-indicating level switches (one for each channel) provide scram discharge volume (SDV) high water level inputs to the four RPS channels. In addition, a non indicating level transmitter and a trip unit for each channel provide redundant SDV high water level inputs to the RPS. This arrangement provides diversity, as well as

redundancy. Sensors are arranged so that no single event will prevent a reactor scram caused by scram discharge volume high water level.

With the predetermined scram setting, a scram is initiated when sufficient capacity still remains in the tank to accommodate a scram. Both the amount of water discharged and the volume of air trapped above the free surface during a scram were considered in selecting the trip setting.

Scram discharge volume water level trip channel operating bypasses are described in Subsection 7.2.1.1.4.4.4.

The scram discharge volume function is to receive water which is discharged from the control rod drives (CRD) during a scram. If at the completion of the scram the level of water in the scram discharge volume is greater than the trip setting, the RPS cannot be reset until the discharge volume has been drained. In addition as described previously, the trip setting has been selected such that sufficient volume would be available to receive a full discharge of CRD water in the event that the scram discharge volume high level trip does not occur and subsequent scram protection is required.

The environmental conditions for the RPS are described in Subsection 3.11. The piping arrangement of the scram discharge volume level sensors is shown on Drawing M05-1078, “CRD Hydraulic System P&ID.”

(8) Drywell Pressure

Drywell pressure is monitored by four nonindicating pressure transmitters mounted on instrument racks outside the drywell in the containment. These racks also house the reactor vessel level and pressure sensors. Instrument sensing lines connect the transmitters with the drywell interior. The transmitters are physically separated and electrically connected to the RPS so that no single event will prevent a scram caused by drywell high pressure. Cables are routed from the transmitters to the divisional cabinets. Each transmitter provides an input to one trip channel and one logic division. Each transmitter provides a drywell high pressure signal to one trip channel trip module in the RPS. At least two trip channel trips are required to cause a scram.

The discussion of diversity for high drywell pressure is provided in Subsection 7.2.1.1.4.5. The environmental conditions of the RPS are described in Subsection 3.11.

(9) Deleted.

(10) Manual Scram

A scram can be initiated manually. There are four scram buttons, one for each division logic (1, 2, 3 and 4). To initiate a manual scram, the arming collars must be set and at least two buttons must be depressed. The manual scram logic is the same as the automatic scram logic at the divisional logic level, i.e., any two-out-of-four divisions. The switches are located close enough to permit one hand motion to initiate a scram. Manual scram capability can be tested. The reactor operator also can scram the reactor by interrupting power to the scram pilot valve solenoids or by placing the mode switch in its shutdown position.

7.2.1.1.4.3 Logic

The basis logic arrangement of the RPS is illustrated in drawing E02-1RP99. The system is arranged as four separately powered division logics. Each logic receives input signals from at least one channel for each monitored variable. At least four channels for each monitored variable are required, one for each of its four automatic or manual logics.

Channel and trip logic devices are fast-response, and are highly reliable solid-state components. The actuator logic devices for interrupting the scram pilot valve solenoids have high current carrying capabilities and are highly reliable. All RPS logic devices are selected so that the continuous load will not exceed 50% of the continuous duty rating. The system response time, from the input of a step function to the input of the trip channel trip device, up to and including the change of state of the trip actuator, is less than 30 milliseconds. The time requirements for control rod movement are discussed in Subsection 4.6.1.1.2.5.3. The RPS response time, which is the time interval from when the monitored parameter exceeds its setpoint at the channel sensor until de-energization of the scram pilot valve solenoids, is provided in the Operational Requirements Manual (ORM).

In each division, the trip channel inputs are combined into a two-out-of-four system trip logic or a non-coincident combination logic in each of the four divisional trip systems.

Each trip system logic provides one input into each of the actuator logics. To produce a scram, any two-out-of-four Actuator logics must be tripped.

Diversity of variables is provided for RPS but not in the trip and actuator logics.

The RPS reset switches (one per division) are used to momentarily bypass the seal-in circuit of the trip logic of the reactor shutdown system. If a single trip logic is tripped, or if a reactor scram condition is present, manual reset is prohibited for a 10-second period to assure completion of required safety actions and to permit the control rods to achieve their fully inserted position. The manual trip can be immediately reset.

Scram reset redundancy is provided by use of four reset switches. Actuation of all four switches is required to reset, following a scram and 10 second time delay, provided that the scram initiation signal has cleared. The use of four reset switches ensures that each division of the RPS logic is reset and that the trip condition has cleared.

7.2.1.1.4.4 Scram Operating Process

Divisional channel bypasses exist for all essential variables, except the non-coincident NMS channels which can be bypassed by individual selector switches, via the NS^4/RPS division of sensor bypass. Only one division may be bypassed at a time which converts the RPS system logic from a two-out-of-four to a two-out-of-three logic trip system. Interlocks are provided to prevent bypassing more than one logic division at a time.

All manual bypass switches are in the main control room, under the direct control of the main control room operator. The bypass status of trip system components is continuously indicated in the control room. There are four keylocked bypass switches, one for each logic division, located in the main control room. Bypassing any single system logic division will not inhibit protective action when required.

7.2.1.1.4.4.1 Neutron Monitoring System

Bypasses for the neutron monitoring system channels are described below.

Divisional channel bypasses exist for both the APRM and IRM system channels via the NS^4/RPS division of sensor bypass. Only one division may be bypassed at a time, which then converts the RPS system logic from a two-out-of-four to a two-out-of-three logic trip system. Interlocks are provided to prevent bypassing more than one logic division at a time. There are four keylocking bypass switches of the maintained contact type, one for each logic division, located in the main control room. Bypassing either an APRM or an IRM channel will not inhibit the neutron monitoring system from providing protection action when required.

Divisional bypasses do not exist for the SRM RPS logic. However, individual SRM channels may be bypassed by a selector switch located in the main control room. For the SRM division logic to function, either a non-tripped or bypass condition for the APRM and IRM division logic must exist. During fuel loading, neutron flux is monitored by the source range neutron monitoring channels. When the four shorting links are removed, the SRMs provide a scram signal when the preset level of any channel has been reached. The SRM trip logic is bypassed by installation of the four shorting links.

7.2.1.1.4.4.2 Turbine Stop Valve and Turbine Control Valve Test/Fast Closure

The turbine control valve fast closure scram and turbine stop valve closure scram are automatically bypassed if reactor power is at a value less than 33.3% of its rated value as indicated by turbine first stage pressure. Closure of these valves below this low initial power level will not cause fuel thermal power limits (MCPR) to be violated, thus the protective scram trip is bypassed at these low power levels. Turbine control valve fast closure and turbine stop valve closure trip bypass is effected by four pressure transmitters connected to the turbine first stage. One annunciator for channels 1 and 4 and one for channels 2 and 3 indicate the bypass condition. The transmitters are arranged so that no single failure can prevent a turbine stop valve closure scram or turbine control valve fast closure scram. In addition, this bypass is operationally removed when the turbine first stage pressure exceeds the setpoint corresponding to greater than 33.3% of rated power.

Turbine first stage pressure is sensed from 2 physically separate and redundant pressure taps. Each pressure tap is piped to two pressure transmitters which sense first stage pressure. Redundancy has been achieved by connecting one pressure transmitter output to each of the four divisional trip logics such that at least two divisions must be bypassed, by action of the turbine first stage pressure scram bypass trip modules, to prevent a scram from turbine stop valve closure or turbine control valve fast closure.

7.2.1.1.4.4.3 Main Steam Line Isolation Valves

At plant shutdown and during initial plant startup, bypass is required for the main steam line isolation valve closure scram trip in order to properly reset the Reactor Protection System. This bypass is in effect when the mode switch is in the shutdown, refuel or startup position. The bypass allows plant operation when the main steam line isolation valves are closed during low power operation. The operating bypass is removed when the mode switch is placed in RUN.

The discussion of diversity for main steam line isolation valve closure is provided in Subsection 7.2.1.1.4.2(6) and 7.2.1.1.4.5.

7.2.1.1.4.4.4 Scram Discharge Volume Level

The scram discharge high water level trip bypass is controlled by the manual operation of keylocked divisional bypass switches, and is interlocked with the mode switch. The mode switch must be in the SHUTDOWN or REFUEL position. Four bypass channels emanate from the four banks of the RPS mode switch and are connected into the RPS logic. This bypass allows the operator to reset the reactor trip system trip actuators so that the system is restored to operation allowing the operator to drain the scram discharge volume. Resetting the trip actuators opens the scram discharge volume vent and drain valves. One annunciator in the main control room for each channel indicates the bypass condition.

The discussion of diversity of the scram discharge volume level trip is provided in Subsection 7.2.1.1.4.2(7).

7.2.1.1.4.4.5 Mode Switch in Shutdown

The scram initiated by placing the mode switch in SHUTDOWN is automatically bypassed after a short time delay. The bypass allows the control rod drive hydraulic system valve lineup to be restored to normal. One annunciator in the main control room for channels 1 and 4 and one for channels 2 and 3 indicate the bypassed condition.

Redundancy of the operating bypass with the mode switch in shutdown is provided by four separate time delay devices connected in a manner which provides redundancy of the bypass operation, but will not inhibit the scram initiation.

Diversity of variables is not provided for this function because placing of the mode switch in shutdown is the normal method for shutting down the reactor and requires only operator action for initiation. The mode switch in shutdown is not a safety function and does not require diversity.

7.2.1.1.4.4.6 Maintenance, Calibration or Test Bypasses

Each reactor scram sensor can be removed for maintenance, test or calibration. When a trip channel is removed from service, annunciation of the administrative tripping of one of the four trip channels or alarming of the channel bypass is provided in the control room.

A single division of system inputs to the 2/4 logics may be bypassed by the manual actuation of one keylocked selector switch located in the main control room. The bypass switch permits disabling the inputs of one division at a time, changing the overall two out of four logics to two out of three (still meeting the single failure criterion requirement of IEEE-279). There are four sensor bypass switches designated for NS^4/RPS. Each switch is electrically interlocked to prevent bypassing more than one divisions' inputs (to that system) at a time. Each bypass is indicated at the input cabinet, and is annunciated in the main control room.

The bypass switch in one logic cabinet is electrically interlocked with the switches on the other divisions. Only the first bypass switch operated will affect a bypass. If a second switch is operated or fails so that it attempts to bypass, the bypass signal is ignored.

APRM and IRM channel trip functions are administratively bypassed by the use of the respective division sensor bypass switch as required for maintenance, test, or calibration.

Administrative controls during maintenance, test, and calibration are specified in the individual maintenance, test, and calibration procedures and in the plant Technical Specifications. A discussion of the bypass indication is provided in Subsection 7.2.2.1.2.

7.2.1.1.4.4.7 Interlocks

The scram discharge volume high water level trip bypass signal interlocks with the rod control and information system to initiate a rod block.

Reactor vessel low water level, reactor vessel pressure and drywell high pressure signals are shared with the containment and reactor vessel isolation control system (CRVICS). The sensors provide signals to trip channels in the RPS, and the containment and reactor vessel isolation control system (CRVICS).

The turbine stop valve closure and turbine control valve fast closure channels also provide signals to trip the reactor recirculation pumps.

In addition, the turbine stop valve channels are interlocked with the CRVICS low condenser vacuum bypass.

A discussion of the Neutron Monitoring System interlocks to rod block functions is provided in Subsection 7.6.1.5.

The reactor mode switch has interlocks to other than the RPS. These interlocks are discussed in Subsection 7.6.1 and 7.3.1.

7.2.1.1.4.5 Redundancy and Diversity

Instrument sensing lines from the reactor vessel are routed through the drywell and terminates inside the containment. Instruments mounted on instrument racks in the containment sense reactor vessel pressure and water level from these instrument sensing lines. Valve position switches are mounted on valves from which position information is required. The sensors for RPS signals from equipment in the turbine building are mounted locally. The four battery powered inverters and divisional 120 Vac power supplies for the RPS are located in an area where they can be serviced during reactor operation. Cables from sensors and power cables are routed to four RPS logic cabinets in the main control room. One logic cabinet is used for each division.

The redundancy portions of the RPS have physically separated sensor taps, sensing lines, sensors, sensor rack locations, cable routing and termination in four separate panels in the control room. By the use of four or more separate redundant sensors for each RPS variable with separate redundant logic and wiring, the RPS system has been protected from a credible single failure. For additional information on redundancy of RPS subsystems, refer to Subsection 7.2.1.1.4.2.

Redundancy of NSPS power supply to RPS logic is provided. There are four battery powered inverter power supplies which supply NSPS electrical power, one to each logic division of the RPS. A loss of one power supply will neither inhibit protective action nor cause a scram.

Diversity is provided by monitoring diverse sets of independent reactor vessel variables. Pressure, water level, and neutron flux are all independent and are separate inputs to the system.

Main steam line isolation valve closure, turbine stop valve closure, and turbine control valve fast closure are anticipatory of a reactor vessel high pressure and power scram trip. Therefore, reactor high pressure and power are diverse scram inputs to main steam line closure. Drywell high pressure and reactor low water level are diverse scram variables for a steam line break inside the containment.

Diversity of variables for main steam line breaks outside the drywell, which initiate main steam line isolation and in turn reactor trip initiation is covered in Subsection 7.3.1.1.2.4.1.3.5.

Diversity of variables for residual heat removal (RHR) system line breaks, which only initiate RHR isolation, is covered in Subsection 7.3.1.1.2.4.1.11.5.

Diversity of variables for reactor water cleanup system (RWCU) line breaks, which only initiate RWCU isolation, is covered in Subsection 7.3.1.1.2.4.1.10.5.

Diversity of variables for reactor core isolation cooling (RCIC) system steam line breaks, which only initiate RCIC isolation, is provided by ambient temperature, steam line pressure, and flow measurements.

Other leaks outside drywell are detected by sump levels and the leak detection signals have no reactor trip function.

Additional discussions of diversity of RPS variables are provided in Subsection 7.2.1.1.4.2.

7.2.1.1.4.6 Actuated Devices

The actuator logic prevents output current flow when a trip signal is received and deenergizes the scram valve pilot solenoids. There are two pilot solenoids per control rod. Both solenoids must deenergize to bleed the instrument air from and open the inlet and outlet scram valves to allow drive water to scram a control rod. Each solenoid receives its signal from actuator logic in divisions 1 through 4. The instrument air system provides support to the RPS by maintaining the air operated scram valve closed until a scram is required.

The individual control rods, the scram valves and pilot solenoids and their controls are not part of the RPS. For further information on the scram valves and controls rods see Subsection 4.2.3.

The “A” and “B” scram pilot valve solenoids are supplied from RPS busses A and B. Each RPS bus provides uninterruptible non-Class 1E 120 Vac power. See Subsection 7.2.1.1.3.1.

In addition to the two scram valves for each control rod drive, there are two backup scram valves which are used to vent the scram pilot valve air header for all control rods. Energizing either backup scram valve initiates venting, and the two backup scram valves are individually supplied with 125-Vdc power from the essential plant batteries. Any use of plant instrument air system for auxiliary use is so designed that a failure of the air system will cause a safe direction actuation of the safety device.

7.2.1.1.4.7 Separation

Four independent sensor channels monitor the various process variables listed in Subsection 7.2.1.1.4.2. The redundant sensor devices are separated such that no single failure can prevent a scram. All protection system wiring outside the logic cabinets is run in divisional raceways. Physically separated cabinets or cabinet bays are provided for the four scram trip logics. The arrangement of RPS channels and logic is shown in Figure 7.2-3. The criteria for separation of sensing lines and sensors are discussed in Subsection 7.1.2.2.

The mode switch, scram discharge volume high water level trip bypass switches, scram reset switches, and manual scram switches are all mounted on the principal plant console. Each device is mounted in a metal enclosure and has a sufficient number of barrier devices to maintain adequate separation between redundant portions of the RPS. Conduit is provided from the metal enclosures to the point where adequate physical separation can be maintained without barriers.

The outputs from the logic cabinets to the scram pilot valve solenoids are run in rigid conduit or armored cable with no other wiring. There are conduit groups which match the four scram groups. The groups are selected so that the failure of one group to scram will not prevent a reactor shutdown.

Signals which must run between redundant RPS divisions are electrically/physically isolated by isolators to provide separation.

RPS inputs to annunciators, recorders, and the computer systems are arranged so that no malfunction of the annunciating, recording or computing equipment can functionally disable the RPS. Direct signals from RPS sensors are not used as inputs to annunciating or data logging equipment. Electrical isolation is provided between the primary signal and the information output by means of optical isolators.

7.2.1.1.4.8 Testability

The RPS can be tested during reactor operation by six separate tests. The first five tests are manual tests and, although each individually is a partial test, combined with the sixth test they constitute a complete system test. The sixth test is the self-test of the Nuclear Systems Protection System which includes the logic for the RPS and several other safety systems. The self-test automatically tests the complete system excluding sensors and actuators.

The first of these is the manual scram test. The manual scram test verifies the ability to de-energize the scram pilot valve solenoids without scram by using the manual scram pushbutton switches. By depressing the manual scram button for one trip logic, one of the two pilot valve solenoids in each scram group is de-energized. After the first trip logic is reset, the second trip logic is tripped manually and so forth for the four manual scram buttons. In addition to control room and computer printout indications, scrams groups indicator lights indicate that the actuator trip logics have de-energized the scram pilot valve solenoids.

The second test includes calibration of the Neutron Monitoring System by means of simulated inputs from calibration signal units. Calibration and test controls for the Neutron Monitoring System are located where the LPRM cards are located in the Main Control Room. They are under the administrative control of the control room operator. Subsection 7.6.1.5, "Neutron Monitoring System," describes the calibration procedure.

The third test is the single rod scram test which verifies the capability of each rod to scram. It is accomplished by operating two toggle switches on the hydraulic control unit for the particular control rod drive. Timing traces can be made for each rod scrammed. Prior to the test, a physics review is conducted to assure that the rod pattern during scram testing will not create a rod of unacceptable reactivity worth.

The fourth test involves applying a test signal to each RPS analog trip channel in turn and observing that the channel trip device changes state. One method utilizes electrical signals generated by the calibrator and fed to the ATM while bypassing the transmitter (see Subsection 7.1.2.10). If desired, the transmitter may be used directly in the test. In this method, the manually initiated test signals simulate the actual process signal. The test signal can be manually varied and, in conjunction with the Analog Trip Module (ATM) output indicator light and the appropriate instruments, both the transmitter and ATM outputs can be verified. This test also verifies the channel independence of the input variables. Pressure transmitters and level transmitters are located on their respective local panels. The transmitters can be individually valved out of service and subjected to test pressure to verify operability of the transmitters as well as verification of calibration range. To gain access to the field controls on each transmitter, a cover plate of sealing device must be removed. The access to the field controls is administratively controlled. Only qualified personnel are granted access for the purpose of testing or calibration adjustments.

The fifth test is the sensor check. Digital inputs are tested by varying the monitored variable (e.g., stop valve closure, control valve fast closure, main steam line isolation valve closure) or by disconnecting the sensor from the process variable and inputting and varying a test source (e.g., CRD scram discharge high water level). In those cases where the sensor is disconnected from the process variable, an out-of-service alarm will be indicated in the main control room. Analog input is checked by cross comparison of the instrument channels measuring the same variable.

The sixth test is an Automatic Pulse Test (APT) performed by the Self-Test Subsystem (STS) to the Nuclear Systems Protection System (NSPS).

The Self-Test Subsystem is an overlay testing and surveillance subsystem which provides the capability to continuously and automatically perform end-to-end testing of all active circuitry, within the NSPS panels, essential to the safe shutdown of the reactor.

The primary purpose of the STS is to improve the availability of the NSPS by optimizing the time to detect and determine the location of a failure in the functional system. It is not intended that the STS eliminate the need for the other five manual tests. Rather, by continuously providing an on-line periodic test, most faults are detected more quickly than by manual testing only. The STS is classified as Safety Associated, and its equipment is designed to meet the IEEE standards and Regulatory Guides which apply to this classification. In particular, the STS is designed to meet the separation requirements of Reg Guide 1.75 by use of the same isolation devices and enclosures as the NSPS equipment with which it is associated. Wherever it interfaces with safety equipment, STS equipment is qualified to 1E standards. In addition, the interfaces are by means of high impedance isolation devices which insure that failures in the STS will not propagate to the safety equipment.

The overall STS has the following general features:

(1) Each of the four NSPS divisional panels has a resident Self-Test Controller (STC) which contains a microprocessor executing firmware program designed to perform the required testing within that panel and to perform the monitoring function between the panels. In conjunction with the STC's in the other three divisions, the interdivisional communication paths including the divisional isolators are tested.

(2) A portable Diagnostic Terminal (DT) is used by maintenance for fault isolator. It is capable of detecting faults down to the replaceable PC card level. By providing information display and control interface to the STS, the Diagnostic Terminal minimizes the need for physical access to the essential hardware panels during maintenance thus serving to maximize NSPS availability. By using the keyboard of the DT, manual operation mode allows the selection of any test and repetition of tests.

(3) The Process Computer (Performance Monitoring System) is used primarily as a communication link between the Diagnostic Terminal and the four Self-Test Controllers.

(4) The STS provides the means to continuously monitor the logic circuit integrity and the circuit continuity of the following seven essential nuclear systems protection systems (NSPS) resident in the four divisional panels:

A. Reactor Protection System

B. Nuclear Steam Supply Shutoff System

C. High Pressure Core Spray System

D. Residual Heat Removal System

E. Automatic Depressurization System

F. Reactor Core Isolation Cooling System

G. Low Pressure Core Spray System

The STS utilizes the stimulus-response method of testing. A series of short duration pulses (origin of the name Automatic Pulse Test) are injected through a high impedance path into the "front ends" of the various modules (printed circuit boards). The pulse is of sufficient duration to temporarily change the state of the module. The test pulse is propagated through the logic to the point of measurement where it is compared by the STC with the expected result stored in the non-volatile data base of the STC.

To minimize test time, each system is subdivided into circuits which are tested separately. Interface circuits are retested by overlap-testing of the involved circuits.

The maximum propagation delay (response time) through any logic channel in the NSPS will always be less than 1 millisecond for each overlapping test or the STS will report a logic fault.

Test pulses are purposely of short duration and limited repetition rate so that they do not latch and cause mechanical movement downstream. This difference in responsiveness between functional system and tester is easy to achieve since the former involves electro-mechanical devices, slower response, and the latter is just an electronic pulse, fast response.

To provide protection against inadvertent operation caused by abnormally long pulse, the device which couples the test pulse to the input has discrete elements combined in a manner to attenuate a pulse of excessive long duration.

Only one STC at a time is allowed to perform its test sequence and this STC is known as the Master Unit with the other three STC being the slave units. Upon test completion, test control is passed on to the next STC which then becomes the new Master Unit. The testing continuously sequences from one STC to the next with the selection sequence being under software control. The slave units monitor the master unit and have the capability of taking over the annunciating when one detects a master unit fault.

Each test sequence within a Division consists of four major test functions:

(1) Test Microprocessor, Firmware, and Memory (self-check)

(2) Test Self-Test Subsystem

(3) Test NSPS System

(4) Test Interdivisional Communication Links

The above tests are organized and controlled to establish NSPS circuit integrity by testing the tester first and then expanding the monitoring functions to include the interface circuitry and finally the NSPS circuits and interdivisional lines.

Any STS failure will not degrade the NSPS function since STS is isolated from NSPS, hence eliminating failure propagation. Furthermore, any STS failure is automatically detected by the self-check and self-test of STS and cross-check of STC's. All interdivisional links are optically isolated.

Upon fault detection (either absence of a signal or presence of a faulty signal), a retest sequence is performed before the information is recorded in the error log of the respective STC. A single “STS Failure” annunciator output is provided to annunciate any failure detected by the STS. This indicates that a failure has been identified by the STS, either in the STS itself or in a functional system and that maintenance attention is required, commencing at the diagnostic terminal.

This annunciator is designed to minimize the potential for a failure in one division to inhibit an annunciator from another division. The Diagnostic Terminal (DT) is then used to obtain the specific STC error log. The DT then functions as an interactive terminal allowing maintenance to isolate the fault to a replaceable PC card level.

Backup information to identify the source of functional system out-of-service annunciation is provided by the system elementary diagrams which include indicators for the seven essential NSPS systems.

Other tests which are performed on a less frequent basis are the ATM set point and response test, plant startup and shutdown sensor verification, sensor response time test, and special component manual tests. They are discussed in the following paragraphs.

A manual ATM set point and response test is provided (see Technical Specification). Each ATM has provisions for the application of a current ramp and a stable current level. The current ramp is applied to check the trip setpoint and response time. The stable current level is applied to the set point (calibration). Bypasses may be utilized while performing individual ATM set point/response tests. Indication of a bypass at the annunciator panel in the control room will be initiated at the time the ATM is selected and placed in test/calibrate mode. The design is such that a gross failure alarm is initiated any time the manual test/calibrate is applied.

The alarm typewriter provided with the Performance Monitoring System (process computer) verifies the correct operation of any sensors during plant startup and shutdown. Main steam line isolation valve position switches and turbine stop valve position switches can be checked in this manner. The verification provided by the alarm typewriter is not considered in the selection of test and calibration frequencies and is not required for plant safety.

Required sensor response times are determined for each RPS function and are identified in the design specification. The sensor manufacturer provides sensors which meet the required response times and certifies their ability to obtain these values. During preoperational testing, the sensors are tested using an accepted industry method, and the actual response time data are compared to the design requirement for acceptance. In addition, the overall RPS response time is verified during preoperational testing from sensor trip to load drive trip device to the change of state of the actuator logic output, and can be verified thereafter by similar test.

For NSPS components identified as having particular failure modes which could prevent the NSPS from performing its safety functions and which are not automatically tested by the self test system or monitored during standard periodic surveillance tests, special manual tests are performed at specified intervals to ensure their functionality.

7.2.1.1.4.9 Noise and Interference

The basic elements of the decision-making logic of the NSPS are standard MIL grade CMOS logic elements, in dual in-line ceramic packages, mounted on multilayer printed circuit cards.

CMOS logic was chosen for the NSPS application because of its high noise immunity compared to other types of solid state devices. With the CMOS devices powered by 12 Vdc, it takes an input greater than approximately 4 V to switch the output on a low-to-high transition, and less than approximately 8 V to switch on a high-to-low transition. Thus, noise spikes of considerable magnitude can be tolerated on the input lines without causing erroneous logic states. As a comparison, TTL logic that must be operated at +5 V has a low-to-high minimum threshold of approximately .7 V.

Numerous design techniques have been utilized to reduce the possibility of any significant electrical noise being coupled into the logic circuitry. All inputs and outputs that leave the NSPS cabinets are buffered and isolated, and internal wiring is routed to prevent "crosstalk" or radiated electro-magnetic interference.

Specifically, prevention of electromagnetic conducted interference is accomplished in the following ways.

Power lines: Conduction of EMI via power lines to the logic elements is prevented by the use of switching power supplies that are specified by the manufacturer to have a maximum noise spike of 62 mV. In addition, each logic card has single pole filters on the power input to remove any remaining high-frequency noise.

Input signal lines: Inputs from other separation divisions and from nondivisional sources are processed through optical isolators which are also filtered on the input side. Inputs from same-division sources such as the control room panels or field sources are processed through digital signal conditioners (DSC's) that are filtered and optically coupled. Inputs to trip units are current loops and therefore much less vulnerable to EMI.

Output signal lines: Outputs to actuated devices pass through load drivers that have pulse transformer coupling between input and output stages. Outputs to other logic elements in other divisions pass through optical isolators.

Internal wiring: Interconnections between logic cards is on a backplane of wire-wrapped terminals. The connections are made point to point so that groups of wires do not run in parallel for long distances. Power wiring is routed as far from signal wiring as possible. The high current wiring of the drives to the pilot valve solenoids is run in conduit, as is the wiring for utility services (lighting).

Card layout: All signal inputs at the card level are buffered by a 100 K ohm resistor. The use of ground planes over large areas of the boards also insures electrically quiet circuitry.

All standards of good practice were applied during the design and construction of the solid state safety system to prevent any problem with EMI. (Q&R 421.18)

7.2.1.1.5 Environmental Considerations

Electrical devices for the RPS instrumentation are located in the containment, turbine building and main control room. The environmental conditions for these areas are shown in Table 3.11-5.

7.2.1.1.6 Operational Considerations

7.2.1.1.6.1 Reactor Operator Information

7.2.1.1.6.1.1 Indicators

Scram group indicators extinguish when an actuator logic prevents output current flow from the 120 Vac power source to the scram pilot valve solenoid associated with the actuator logic.

Recorders (which are not part of the RPS) in the main control room also provide information regarding reactor vessel water level, reactor vessel pressures, and reactor power level.

7.2.1.1.6.1.2 Annunciators

Each RPS trip channel input is provided to the annunciator system through isolation devices. Trip logic trips, manual trips, and certain bypasses also signal the annunciator system (Subsection 7.7.1).

When an RPS sensor trips, it lights an annunciator window, one common to division 1 and 4 sensors and one common to division 2 and 3 sensors for that variable, or the principle plant console in the main control room to indicate the out-of-limit variable. Each trip logic, one common to logic division 1 and 4 and one common to logic division 2 and 3, lights a red annunciator window to indicate that a trip has occurred. As an annunciator system input, a RPS channel trip also sounds an audible indication, which can be silenced by the operator. The annunciator window lights flash until acknowledged, whereupon the window lights latch on. Resetting the annunciator system so as to extinguish the window lights is not possible until the condition causing the trip has been cleared.

7.2.1.1.6.1.3 Computer Alarms

A computer printout identifies each tripped channel; however, status indication at the RPS trip channel device may also be used to identify the individual sensor that tripped in a group of sensors monitoring the same variable. Additional discussion of the non-safety computer systems are contained in Section 7.7.1.

Upon detection of a status change of any of the preselected sequential events contacts, the Sequence-of-Events Log shall be initiated and shall signal the beginning of an "Event." The log shall be automatically printed. This log will include both NSS and BOP inputs. Changes of state received 15 milliseconds or more apart are sequentially differentiated on the printed log, together with time of occurrence, which shall be printed in an hours, minutes, seconds, milliseconds format. Use of the alarm printer and computer is not required for plant safety.

7.2.1.1.6.2 Reactor Operation Controls

7.2.1.1.6.2.1 Mode Switch

A conveniently located, multiposition, keylock mode switch is provided to select the necessary scram functions for various plant conditions. The mode switch selects the appropriate sensors for scram functions and provides appropriate bypasses. The switch also interlocks such functions as control rod blocks and refueling equipment restrictions, which are not considered here as part of the RPS. The switch is designed to provide separation between the four trip logic divisions. The mode switch positions and their related scram functions are as follows:

(1) SHUTDOWN

Initiates a reactor scram; bypasses main steam line isolation scram and the reactor vessel high water level scram and provides a discharge volume high water level trip bypass permissive.

(2) REFUEL

Selects neutron monitoring system scram for low neutron flux level operation (but does not disable the APRM scram); bypasses main steam line isolation scram

and the reactor vessel high water level scram and provides a discharge volume high water level trip bypass permissive.

(3) STARTUP

Selects neutron monitoring system scram for low neutron flux level operation; bypasses main steam line isolation scram and the reactor vessel high water level scram.

(4) RUN

Selects neutron monitoring system scrams for power range operation.

7.2.1.1.6.3 Set Points

Instrument ranges are chosen to cover the range of expected conditions for the variable being monitored. Additionally, the range is chosen to provide the necessary accuracy for any required set points and to meet the overall accuracy requirements of the channel. See the Operational Requirements Manual (ORM) for setpoints.

(1) Neutron Monitoring System Trip

To protect the fuel against high heat generation rates, neutron flux is monitored and used to initiate a reactor scram. The neutron monitoring system set point bases are discussed in Subsection 7.6.1.5, “Neutron Monitoring System Instrumentation and Controls.”

(2) Reactor Vessel System High Pressure

Excessively high pressure within the Reactor Vessel threatens to rupture the reactor coolant pressure boundary. A reactor vessel pressure increase during reactor operation compresses the steam voids and results in a positive reactivity insertion; this causes increased core heat generation that could lead to fuel failure and system overpressurization. A scram counteracts a pressure increase by quickly reducing core fission heat generation. The reactor vessel high pressure scram setting is chosen slightly above the reactor vessel maximum normal operation pressure to permit normal operation without spurious scram, yet provide a wide margin to the maximum allowable reactor vessel pressure. The location of the pressure measurement, as compared to the location of highest nuclear system pressure during transients, was also considered in the selection of the high pressure scram setting. The reactor vessel high pressure scram works in conjunction with the pressure relief system to prevent reactor vessel pressure from exceeding the maximum allowable pressure. The reactor vessel high pressure scram setting also protects the core from exceeding thermal hydraulic limits that result from pressure increases during events that occur when the reactor is operating below rated power and flow.

(3) Reactor Vessel Low Water Level

Low water level in the reactor vessel indicates that the reactor is in danger of being inadequately cooled. Decreasing water level while the reactor is operating

at power decreases the reactor coolant inlet subcooling. The effect is the same as raising feedwater temperature. Should water level decrease too far, fuel damage could result as steam forms around fuel rods. A reactor scram protects the fuel by reducing the fission heat generation within the core. The reactor vessel low water level scram setting was selected to prevent fuel damage following abnormal operational transients caused by single equipment malfunctions or single operator errors that result in a decreasing reactor vessel water level. The scram setting is far enough below normal operational levels to avoid spurious scrams. The setting is high enough above the top of the active fuel to assure that enough water is available to account for evaporation loss and displacement of coolant following the most severe abnormal operational transient involving a level decrease.

(4) Reactor Vessel High Water Level

Indicates any increase in feed water flow and impending power increase. The high water level trip causes scram prior to significant power increase, limiting neutron flux and thermal transient so that the fuel design basis is satisfied. The scram setting is selected such that spurious scrams will be avoided and that abnormal operational transients causing an increase in feedwater flow will not result in unacceptable results.

(5) Turbine Stop Valve Closure

Closure of the turbine stop valve with the reactor at power can result in a significant addition of positive reactivity to the core as the reactor vessel pressure rise causes steam voids to collapse. The turbine stop valve closure scram initiates a scram earlier than either the neutron monitoring system or reactor vessel high pressure. It is required to provide a satisfactory margin below core thermal-hydraulic limits for this category of abnormal operational transients. The scram counteracts the addition of positive reactivity caused by increasing pressure by inserting negative reactivity with control rods. Although the reactor vessel high pressure scram, in conjunction with the pressure relief system, is adequate to preclude overpressurizing the nuclear system, the turbine stop valve closure scram provides additional margin to the reactor vessel pressure limit. The turbine stop valve closure scram setting provides the earliest positive indication of valve closure.

(6) Turbine Control Valve Fast Closure

With the reactor and turbine generator at power, fast closure of the turbine control valves can result in a significant addition of positive reactivity to the core as nuclear system pressure rises. The turbine control valve fast closure scram initiates a scram earlier than either the neutron monitoring system or nuclear system high pressure. It is required to provide a satisfactory margin to core thermal-hydraulic limits for this category of abnormal operational transients. The scram counteracts the addition of positive reactivity resulting from increasing pressure by inserting negative reactivity with control rods. Although the nuclear system high pressure scram, in conjunction with the pressure relief system, is adequate to preclude overpressurizing the nuclear system, the turbine control valve fast closure scram provides additional margin to the nuclear system

pressure limit. The turbine control valve fast closure scram setting is selected to provide timely indication of control valve fast closure.

(7) Main Steam Line Isolation

The main steam line isolation valve closure can result in a significant addition of positive reactivity to the core as reactor system pressure rises. The main steam line isolation scram setting is selected to give the earliest positive indication of isolation valve closure. The logic allows functional testing of main steam line isolation trip channels by partially closing a main steam line isolation valve.

(8) Scram Discharge Volume High Water Level

Water displaced by the control rod drive pistons during a scram goes to the scram discharge volume. If the scram discharge volume fills with water so that insufficient capacity remains for the water displaced during a scram, fast control rod movement would be hindered during a scram. To prevent this situation, the reactor is scrammed when the water level in the discharge volume is high enough to verify that the volume is filling up, yet low enough to ensure that the remaining capacity in the volume can accommodate a scram.

(9) Drywell High Pressure

High pressure inside the drywell may indicate a break in the reactor coolant pressure boundary or pressure increase as a result of high drywell temperature. It is prudent to scram the reactor in such situations to minimize the possibility of fuel damage and to reduce energy transfer from the core to the coolant. The drywell high pressure scram setting is selected to be as low as possible without inducing spurious scrams.

(10) Manual Scram

Push buttons are located in the control room to enable the operator to shut down the reactor by initiating a scram.

(11) Mode Switch in SHUTDOWN

When the mode switch is in SHUTDOWN, the reactor is to be shut down with all control rods inserted. This scram is not considered a protective function, because it is not required to protect the fuel or reactor vessel process barrier and it bears no relationship to minimizing the release of radioactive material from any

barrier. The scram signal is removed after a short delay, permitting a scram logic reset that restores the normal valve lineup in the control rod drive hydraulic system.

7.2.1.1.7 Containment Electrical Penetration Assignment

Electrical containment penetrations are assigned to the protection systems on a 4-division basis as described in Subsections 7.2.1.1.4.1 and 7.2.1.1.4.7.

Each penetration is provided with an enclosure box on each end providing continuation of the metal wireways described in Subsection 7.2.1.1.4.7.

7.2.1.1.8 Cable Spreading Area Description

A general description of the separation criteria used in cable spreading areas is described in GE Topical Report NEDO-10466-A "Power Generation Control Complex" and is further described in Subsection 8.3.1.4.

7.2.1.1.9 Main Control Room Area

The main control room area is on one floor. Divisions 2 and 3, Nuclear System Protection System (NSPS) cabinets, and Divisions 1 and 4, NSPS Cabinets are located on opposite sides of the main control room.

Detailed design basis, description, and safety evaluation aspects for a PGCC System are comprehensively documented and presented in GE Topical Report NEDO-10466-A "Power Generation Control Complex;" and its amendments.

7.2.1.1.10 Main Control Room Cabinets and Their Contents

Each RPS logic cabinet for Divisions 1, 2, 3, and 4 contains the trip channel analog trip modules, optical isolators, trip channel logic, self test system, bypass switch, terminal boards, the trip and actuator logics, and the scram actuator load drivers for a single division.

The console for reactor control contains the reactor mode switch, bypass switches, scram solenoid valve status indicating lights, and manual scram switches.

7.2.1.1.11 Test Methods that Ensure RPS Reliability

Surveillance testing is performed periodically on the RPS during operation. This testing includes sensor calibration and trip channel actuation with simulated inputs to individual trip modules and sensors. The sensors, which are transmitters, can be checked by comparison of the associated control room meter readings on other channels of the same variable.

7.2.1.1.12 Interlock Circuits to Inhibit Rod Motion as well as Vary the Protective Function

There are no interlock circuits which inhibit rod motion as well as vary the protective functions.

7.2.1.1.13 Support Cooling Systems, HVAC Systems Descriptions

The cooling (ventilating) systems important for proper operation of RPS equipment are described in Section 9.4.

7.2.1.2 Design Bases

Design bases information requested by IEEE 279 is discussed in the following paragraphs. These IEEE 279 design bases aspects are considered separately from those more broad and detailed design bases for this system cited in Section 7.1.2.1.1.

7.2.1.2.1 Conditions

The generating station conditions which require RPS protective action are identified in the CPS Technical Specifications and the Operational Requirements Manual.

7.2.1.2.2 Variables

The generating station variables which require monitoring to provide protective actions are neutron flux, reactor water level, reactor steam dome pressure, reactor recirculation flow, main steam isolation valve position, turbine stop valve position, turbine first stage pressure, turbine control valve fast closure (sensed as EHC hydraulic oil pressure), drywell pressure and scram discharge volume water level.

7.2.1.2.3 Sensors for Variables Having Spatial Dependence

A minimum number of 16 LPRMs per APRM, with at least 2 LPRMs at each of the 4 core axial levels, are required to provide adequate protective action.

7.2.1.2.4 Operational Limits

Prudent operational limits for each safety-related variable trip setting are selected with sufficient margin so that a spurious scram is avoided. It is then verified by analysis that the release of radioactive material, following postulated gross failures of the fuel or the reactor coolant pressure boundary, is kept within an acceptable bounds. Design basis operational limits are based on operating experience and constrained by the safety design basis and the safety analyses.

7.2.1.2.5 Margin Between Operational Limits

The margin between operational limits and the limiting conditions of operation (scram) for the RPS are in CPS Technical Specifications and Operational Requirements Manual (ORM). The margin includes the maximum allowable accuracy error, sensor response times and sensor set point drift. Annunciators are provided, at the setpoints listed in the Operational Requirements Manual (ORM), to alert the reactor operator of the onset of unsafe conditions.

7.2.1.2.6 Levels Requiring Protective Action

Levels requiring protective action are shown in CPS Technical Specifications and the Operational Requirements Manual. These levels are the limiting safety system settings.

7.2.1.2.7 Ranges of Energy Supply and Environmental Conditions

RPS uninterruptible 120 Vac logic power is provided by four Class 1E NSPS busses. Each bus is powered by a 125 Vdc/120 Vac inverter fed by a battery charger with floating battery. Each battery has sufficient stored energy to maintain a stable power supply and thus prevent scrams

caused by switch yard switching transients. Power loss due to inverter failure is sensed by a solid state transfer switch which then automatically transfers the NSPS bus to an alternate Class 1E power source provided by a Class 1E 480/120 V transformer. Also, 120V AC can be supplied to the Division A and B NSPS buses by manual transfer to an inverter maintenance bypass feed.

RPS 120 Vac scram solenoid and MSIV solenoid power is provided by two uninterruptible Class 1E RPS busses. Each bus is powered by a DC to AC inverter fed by a battery charger with floating battery. During maintenance or inverter failure/power loss, each RPS bus may be transferred manually to an alternate power source provided by a Class 1E 480/120 V transformer. (See Figures 7.2-9 and 7.2-10 and Drawing E02-1RP99.)

Environmental conditions for proper operation of the RPS components during normal operations are covered in Table 3.11-5.

7.2.1.2.8 Unusual Events

Unusual events are defined as malfunctions or accidents, and others which could cause damage to safety systems. Chapter 15 and Appendix 15A, "Accident Analysis" describes the following credible accidents and events; floods, storms, tornadoes, earthquakes, fires, LOCA, pipe break outside containment, and feedwater line break. Each of these events is discussed below for the subsystems of the RPS.

(1) Floods

The buildings containing RPS components have been designed to meet the PMF (Probable Maximum Flood) at the site location. This ensures that the buildings will remain water tight under PMF. Therefore, none of the RPS functions are affected by flooding. See also Section 3.4.1.

(2) Storms and Tornadoes

The buildings containing RPS components have been designed to withstand all credible meteorological events and tornadoes as described in Subsection 3.3.2. Superficial damage may occur to miscellaneous station property during a postulated tornado, but this will not impair the RPS capabilities. See also Section 3.3.

(3) Earthquakes

The structures containing RPS components except the turbine building have been seismically qualified as described in sections 3.7 and 3.8, and will remain functional during and following a safe shutdown earthquake (SSE). Reactor high pressure and power trips are diverse to turbine scram variables.

(4) Fires

To protect the RPS in the event of a postulated fire, the RPS trip logics have been divided into four separate independent RPS panels. The sections are separated by fire barriers. If a fire were to occur within one of the sections or in the area of one of the panels, the RPS functions would not be prevented by the

fire. The use of separation and fire barriers ensures that, even though some portion of the system may be affected, the RPS will continue to provide the required protective action.

Refer to Section 9.5.1.

(5) LOCA

The following RPS subsystem components are located inside the drywell and would be subjected to the affects of a design basis loss-of-coolant accident (LOCA):

a. Neutron Monitoring System (NMS) cabling from the detectors to the main control room.

b. MSIV Inboard position switches.

c. Reactor vessel pressure and reactor vessel water level instrument taps and sensing lines, which terminate outside the drywell.

d. Drywell pressure taps.

These items have been environmentally qualified to remain functional during and following a LOCA as discussed in Section 3.11 and indicated in Table 3.11-5.

(6) Pipe Break Outside Containment

This condition will not affect the reliability of the RPS.

(7) Feedwater Line Break

This condition will not affect the RPS.

(8) Missiles

Missile protection is described in Section 3.5.

7.2.1.2.9 Performance Requirements

The Operational Requirements Manual specifies instrument response time requirements and RPS setpoints which incorporate the affects of instrument performance such as accuracy, range magnitude and rates of change of sensed variables. Further descriptions of instrument performance requirements are included in Design Specifications and Calculations.

7.2.1.3 Final System Drawings

The electrical elementary diagrams which were provided under separate cover are discussed in Section 1.7.1.

7.2.2 Analysis

7.2.2.1 Reactor Protection (Trip) System-Instrumentation and Controls

7.2.2.1.1 General Functional Requirements Conformance

This subsection presents an analysis of how the various functional requirements and the specific regulatory requirements of the RPS design bases (Subsection 7.1.2.1.1) are satisfied.

7.2.2.1.1.1 Conformance to Design Basis Requirements

7.2.2.1.1.1.1 Design Bases 7.1.2.1.1.1.1(1)

The RPS is designed to provide timely protection against the onset and consequences of conditions that threaten the integrity of the fuel barrier. Chapter 15, Accident Analysis, identifies and evaluates events that jeopardize the fuel barrier and reactor coolant pressure boundary. The methods of assessing barrier damage and radioactive material releases along with the methods by which abnormal events are sought and identified are presented in that chapter.

Design bases from Subsection 7.1.2.1.1 require that the precision and reliability of the initiation of reactor scrams be sufficient to prevent or limit fuel damage.

RPS allowable values and trip setpoints are established conservatively from analytic limits by accounting for instrument performance characteristics, calibration error and drift. The analytic limits are derived from limiting values of process parameters, which are obtained from the safety analysis. Technical Specifications provides allowable values, and the Operational Requirements Manual provides setpoints.

The analysis on the use of the RPS inputs from devices mounted on non-seismically qualified equipment and/or located in non-seismically qualified enclosures has been accepted per three Safety Evaluation Reports, References 2, 3, and 4, and include data for 238 and generic 251 BWR/6 designs. This analysis takes into consideration turbine trip, generator load rejection trip, and recirculation pump trip (RPT).

The selection of scram trip settings has been developed through analytical modeling, experience, historical use of initial setpoints and adoption of new variables and setpoints as experience was gained. The initial setpoint selection method provided for settings which were sufficiently above the normal operating levels (to preclude the possibilities of spurious scrams or difficulties in operation) but low enough to protect the fuel. As additional information became available or systems were changed, additional scram variables were provided using the above method for initial setpoint selection. The selected scram settings are analyzed to verify that they are conservative and that the fuel, and fuel barriers are adequately protected. In all cases, the specific scram trip point selected is a conservative value that prevents damage to the fuel, taking into consideration previous operating experience and the analytical models.

7.2.2.1.1.1.2 Design Basis 7.1.2.1.1.1.1(2)

The scram initiated by reactor high pressure, in conjunction with the pressure relief system, is sufficient to prevent damage to the reactor coolant pressure boundary as a result of internal pressure. The main steamline isolation valve closure scram provides a greater margin to the reactor coolant pressure boundary pressure safety limit than does the high pressure scram. For

turbine generator trips, the stop valve closure scram and turbine control valve fast closure scram provide a greater margin to the nuclear system pressure safety limit than does the high pressure scram. Chapter 15, Accident Analysis, identifies and evaluates accidents and abnormal operational events that result in nuclear system pressure increases. In no case does pressure exceed the reactor coolant pressure boundary safety limit.

7.2.2.1.1.1.3 Design Basis 7.1.2.1.1.1.1(3)

The scram initiated by reactor vessel low water level limits the radiological consequences of gross failure of the fuel or reactor coolant pressure boundary. Chapter 15 evaluates gross failures of the fuel and reactor coolant pressure boundary. In no case does the release of radioactive material to the environs result in exposures which exceed the guide values of applicable published regulations.

7.2.2.1.1.1.4 Design Basis 7.1.2.1.1.1.1(4)

Scrams are initiated by variables which are designed to indirectly monitor fuel temperature and protect the reactor coolant pressure boundary. The Neutron Monitoring System monitors fuel temperature indirectly using incore detectors. The incore detectors monitor the reactor power level by detecting the neutron level in the core. Reactor power level is directly proportionate to neutron level and the heat generated in the fuel. Although the neutron monitoring system does not monitor fuel temperature directly, by establishing a correlation between fuel temperature and reactor power level, scram setpoints can be determined for protective action, which will prevent fuel damage.

The reactor coolant pressure boundary is protected by monitoring parameters which indicate reactor pressure directly or anticipated reactor pressure increases. Reactor pressure is monitored directly by pressure sensors, which are connected directly to the reactor pressure vessel through sensing lines and pressure taps. In addition, reactor pressure transients are anticipated by monitoring the closure of valves which shut off the flow of steam from the reactor pressure vessel and cause rapid pressure increases. The variables monitored to anticipate pressure transients are main steamline isolation valve position, turbine stop valve closure, and turbine control valve fast closure. If any of these valves were to close, pressure would rise very rapidly, therefore, this condition is anticipated and a trip is initiated to minimize the pressure transient occurring.

Chapter 15, identifies and evaluates those conditions which threaten fuel and reactor coolant pressure boundary integrity. In no case does the core exceed a safety limit.

7.2.2.1.1.1.5 Design Basis 7.1.2.1.1.1.1(5)

The scrams initiated by the Neutron Monitoring System, drywell pressure, reactor vessel pressure, reactor vessel water level, turbine stop valve closure, main steam isolation valve closure, and turbine control valve fast closure will prevent fuel damage. The scram setpoints and response time requirements for these variables are identified in the Operational Requirements Manual (ORM) and have been designed to cover the expected range of magnitude and rates of change during abnormal operational transients without fuel damage. Chapter 15, identifies and evaluates those conditions which threaten fuel integrity. With the selected variables and scram setpoints, adequate core margins are maintained relative to thermal hydraulic safety limits.

7.2.2.1.1.1.6 Design Basis 7.1.2.1.1.1.1(6)

Neutron flux is the only essential variable of significant spatial dependence that provides inputs to the RPS. The basis for the number and locations follows. The other requirements are fulfilled through the combination of logic arrangement, channel redundancy, wiring scheme, physical isolation, power supply redundancy, and component environmental capabilities.

Two transient analyses are used to determine the minimum number and physical location of required LPRMs for each APRM.

(1) The first analysis is performed with operating conditions of 100% reactor power and 100% recirculation flow using a continuous rod withdrawal of the maximum worth control rod. In the analysis, LPRM detectors are mathematically removed from the APRM channels. This process is continued until the minimum numbers and locations of detectors needed to provide protective action are determined for this condition.

(2) The second analysis is performed with operating conditions of 100% reactor power and 100% recirculation flow using a reduction of recirculation flow at a fixed design rate. LPRM detectors are mathematically removed from the APRM channels. This process is continued until the minimum numbers and locations of detectors needed to provide protective action are determined for this condition.

The results of the two analyses are analyzed and compared to establish the actual minimum number and location of LPRMs needed for each APRM channel.

7.2.2.1.1.1.7 Design Basis 7.1.2.1.1.1.1(7a through 7h)

Sensors, channels, and logics of the RPS are not used directly for automatic control of process systems. An isolated Neutron Monitoring System signal is used with the recirculation flow control system as described in Subsection 7.7.1.3. Therefore, failure in the controls and instrumentation of process systems cannot induce failure of any portion of the protection system.

Failure of any one divisional RPS power supply would result in de-energizing one of the two scram valve pilot solenoids on each scram valve. Alternate power is available to the RPS buses. A complete sustained loss of electrical power to two or more power supplies would result in a scram.

The RPS is designed so that it is only necessary for trip variables to exceed their trip setpoints for sufficient length of time to trip the analog comparater units and seal in the associated trip logic. Once this is accomplished, the scram will go to completion regardless of the state of the variable which initiated the protective action.

When the initiating condition has cleared and a sufficient (10 seconds) time delay has occurred, the scram may be reset only by actuation of the scram reset switches in the main control room by the operator.

Reactor protection cabling for scram solenoids is routed in separate conduits for each scram group.

Physical separation and electrical isolation between redundant portions of the RPS is provided by separated process instrumentation, separated racks, and either separated or protected panels and cabling.

Separate panels are provided for each division except for the principal plant console which has internal metal barriers. Where equipment from more than one division is in a panel, divisional separation is provided by fire barriers and/or physical distance of 6 inches or more where practicable. Where wiring must be run between redundant divisions, divisional separation is provided by electronic optical isolators.

The ability of the RPS to withstand a safe shutdown earthquake is discussed in Section 7.2.1.2.

The ability of the RPS to function properly with a single failure is discussed in Section 7.2.2.1.2.3.1.2.

The ability of the RPS to function properly while any one sensor or channel is bypassed or undergoing test or maintenance is discussed in Section 7.2.1.1.4.4.6.

The RPS logic circuit is designed so that an automatic scram will be initiated when the required number of sensors for any monitored variables exceeds the scram setpoint.

Separate racks are provided for the RPS instrumentation for each division and are installed in different locations.

7.2.2.1.1.1.8 Design Basis 7.1.2.1.1.1.1(8)

Access to trip settings, component calibration controls, test points, and other terminal points is under the control of plant operations supervisory personnel.

Manual bypass of instrumentation and control equipment components is under the control of the operator in the main control room. If the ability to trip some essential part of the system is bypassed, this fact is continuously annunciated in the main control room.

For the subsystem operational bypasses discussed in Subsection 7.2.1, bypassing of these subsystem components provides a continuous annunciation in the main control room. If other components are bypassed, such as taking a sensor out-of-service for calibration or testing, this condition will also be annunciated continuously in the main control room through the controlled manual actuation of the RPS system out-of-service annunciator associated with that sensor.

7.2.2.1.1.1.9 Other Design Basis Requirements

The instruments and equipment of the reactor protection system must operate in environmental conditions corresponding to the zones defined in Section 3.11.

The RPS components located inside the control room envelope will be exposed to a mild environment due to operation of the control room HVAC system as described in Section 9.4.1. The associated components that must function in the environment resulting from a reactor coolant pressure boundary break inside the drywell are the condensing chambers, the inboard main steam line isolation valve position switches, neutron monitoring system cabling, reactor vessel pressure taps, reactor vessel water level instrument taps, instrument sensing lines and drywell pressure taps (see Chapter 15). Special precautions are taken to ensure their

operability after the accident. The condensing chambers and all essential components of the control and electrical equipment are either similar to those that have successfully undergone qualification testing in connection with other projects, or additional qualification testing under simulated environmental conditions has been conducted. Equipment qualification information can be obtained from the respective qualification document packages referenced by component in Nuclear Station Engineering Department Maintenance Standard MS-02.00 (Reference 5).

To ensure that the RPS remains functional, the number of operable channels for the essential monitored variables is maintained in accordance with Technical Specifications.

In case of a loss-of-coolant accident, reactor shutdown occurs immediately following the accident as process variables exceed their specified set point. Operator verification that shutdown has occurred may be made by observing one or more of the following indications:

(1) control rod status lamps indicating each rod fully inserted,

(2) control rod scram pilot valve status lamps indicating open valves,

(3) neutron monitoring channels and recorders indicating decreasing neutron flux.

Following generator load rejection, a number of events occur in the following chronological order:

(1) The pressure in the hydraulic oil lines to the control valves drops, and pressure sensors signal the RPS to scram. At the same time the turbine logic pressure controller initiates fast opening of the turbine bypass valves to minimize the pressure transient. Turbine stop valve closure and turbine control valve fast closure initiates the Recirculation Pump Trip (RPT) logic, which trips the recirculation pumps.

(2) The reactor will scram unless the unit load is less than 33.3% below which the control valve fast closure pressure transient does not threaten the fuel thermal limit.

(3) The trip setting of the APRM channels will be automatically reduced as recirculation flow decreases (flow-referenced scram). Power level will have been reduced by a reactor scram and RPT initiation.

The trip settings discussed in Subsection 7.2.1 are not changed to accommodate abnormal operating conditions. Transients requiring activation of the RPS are discussed in Chapter 15. The discussions there designate which systems and instrumentation are required to mitigate the consequences of these transients.

7.2.2.1.1.1.9.1 Other Considerations

Operability of the anticipatory signals from the turbine control valve fast closure or turbine stop valve closure following a safe shutdown earthquake is not a system design basis. As discussed in Subsection 5.2.2.2.2.2, closure of all the main steamline isolation valves without MSIV position switch trip produces similar effects which are slightly more severe. The design basis analysis is conducted for the MSIV closure.

7.2.2.1.2 Conformance to Specific Regulatory Requirements

7.2.2.1.2.1 Conformance to NRC Regulatory Guides

7.2.2.1.2.1.1 Regulatory Guide 1.11

Conformance to Regulatory Guide 1.11 is discussed in Subsection 6.2.4.3.2.4.

7.2.2.1.2.1.2 Regulatory Guide 1.22

The system is designed so that it may be tested during plant operation from sensor device to final actuator device. The test must be performed in overlapping portions so that an actual reactor scram will not occur as a result of the testing.

7.2.2.1.2.1.3 Regulatory Guide 1.29

The electrical and mechanical devices, the circuitry between process instrumentation and protective actuators, and the monitoring devices of the RPS are classified as Seismic Category I, as discussed in Section 3.2.

7.2.2.1.2.1.4 Regulatory Guide 1.30

Conformance to Regulatory Guide 1.30 is discussed in Section 1.8.

7.2.2.1.2.1.5 Regulatory Guide 1.47

Regulatory Positions C.1, C.2 and C.3

Automatic indication is provided in the main control room to inform the operator that a system is out-of-service. Indicator lights indicate which part of a system is not operable. For example, the RPS system out-of-service annunciators energize whenever more than one RPS channel has an input variable out of service. By placing a trip module in calibration, indicator lights provide information as to which division is in calibration.

Regulatory Position C.4

All the annunciators can be tested by depressing the annunciator test switches on the main control room benchboards.

The following discussion expands the explanation of conformance to Regulatory Guide 1.47 to reflect the importance of providing accurate information for the operator and reducing the possibility for the indicating equipment to adversely affect its monitored safety system.

(1) Individual indicator lights are arranged together on the main control room benchboards and principal plant console to indicate what function of the system is out of service, bypassed or otherwise inoperable. All bypass and inoperability indicators both at a system level and component level are grouped only with items that will prevent a system from operating if needed.

(2) These indication provisions serve to supplement administrative controls and aid the operator in assessing the availability of component and system level protective actions. This indication does not perform a safety function.

(3) All system out of service annunciator circuits are electrically independent of the plant safety systems to prevent the possibility of adverse effects.

(4) Each indicator is provided with dual lamps. Testing will be included on a periodic basis when equipment associated with the indication is tested.

7.2.2.1.2.1.6 Regulatory Guide 1.53

Compliance with NRC Regulatory Guide 1.53 is attained by specifying, designing, and constructing the RPS to meet the single failure criterion, Section 4.2, of IEEE 279 "Criteria for Protection Systems for Nuclear Power Generating Stations," and IEEE 379 "IEEE Trial-Use Guide for the Application of the Single-Failure Criterion to Nuclear Power Generating Station Protection Systems." Redundant sensors are used and the logic is arranged to ensure that a failure in a sensing element or the decision logic or an actuator will not prevent protective action. Separated channels are employed, so that a fault affecting one channel will not prevent the other channels from operating properly.

7.2.2.1.2.1.7 Regulatory Guide 1.62

Means are provided for manual initiation of reactor manual scram through the use of four armed pushbutton switches. These switches are located on the principal plant console.

The amount of equipment common to initiation of both manual scram and automatic scram is kept to a minimum through implementation of manual scram as close as practicable to the final devices of (Load Drivers) the protection system. No single failure in the manual, automatic, or common portions of the protection system will prevent initiation of reactor scram by manual or automatic means.

Manual initiation of reactor scram, once initiated, goes to completion as required by IEEE 279, Section 4.16.

7.2.2.1.2.1.8 Regulatory Guide 1.63

Conformance with this Regulatory Guide is discussed in Chapter 8, Section 8.1.6.1.12.

7.2.2.1.2.1.9 Regulatory Guide 1.68

Conformance with this Regulatory Guide is discussed in Chapter 14, Section 14.2.7 and Table 14.2-1.

7.2.2.1.2.1.10 Regulatory Guide 1.75

The RPS complies with the criteria set forth in IEEE 279, Paragraph 4.6 and Regulatory Guide 1.75. Class 1E circuits and Class 1E-associated circuits are identified and separated from redundant and non-Class 1E circuits. Isolation devices are provided in the design where an interface exists between redundant Class 1E divisions and between non-Class 1E and Class 1E or Class 1E-associated circuits. Independence and separation of safety-related systems is discussed in Section 7.1.2.6.19.

Physical and electrical independence of the instrumentation devices of the system is provided by channel independence for sensors exposed to each process variable. Separate and

independent conduits for scram solenoid and neutron monitoring input cables are routed from each device to the respective main control room panel. Each division has a separate and independent main control room panel bay. Trip logic outputs are separate in the same manner as the divisions. Signals between redundant RPS divisions are electrically and physically isolated by Class 1E optical isolators.

7.2.2.1.2.1.11 Regulatory Guide 1.89

Written procedures and responsibilities are developed for the design and qualification of all RPS equipment. This includes preparation of specifications, qualification procedures and documentation for RPS equipment. Standards manuals are maintained containing specifications, practices, and procedures for implementing qualification requirements, and an auditable file of qualification documents is available for review. All of this is included in the design even though the RPS is not required to comply with Regulatory Guide 1.89.

7.2.2.1.2.1.12 Regulatory Guide 1.97

Refer to Section 7.1.2.6.23 for assessment of Regulatory Guide 1.97.

7.2.2.1.2.1.13 Regulatory Guide 1.100

Refer to Section 7.1.2.6.24 for assessment of Regulatory Guide 1.100.

7.2.2.1.2.1.14 Regulatory Guide 1.105

Refer to Section 7.1.2.6.25 for assessment of Regulatory Guide 1.105.

7.2.2.1.2.1.15 Regulatory Guide 1.118

Refer to Section 7.1.2.6.26 for assessment of Regulatory Guide 1.118.

Position C.5 for APRM: With respect to conformance to position C.5, the inherent time response of the in-core sensors used for APRM (fission detectors operating in the ionization chamber mode) is many orders of magnitude faster than the APRM channel response time requirements and the signal conditioning electronics. The sensors cannot be tested without disconnecting and reconnecting to special equipment.

7.2.2.1.2.2 Conformance to 10 CFR 50, Appendix A - General Design Criteria

7.2.2.1.2.2.1 General Design Criterion 1

The quality assurance program for the system assures sound engineering in all phases of design and construction through conformity to regulatory requirements and design bases described in the license application. The quality assurance program is discussed in Chapter 17.

Documents are maintained which demonstrate that all the requirements of the quality assurance program are being satisfied. These records will be maintained during the life of the operating licenses.

7.2.2.1.2.2.2 General Design Criterion 2

Wind and tornado loadings are discussed in Section 3.3, flood design is described in Section 3.4 and seismic qualification of instrumentation and electrical equipment is discussed in Section 3.10.

7.2.2.1.2.2.3 General Design Criterion 3

The fire protection system and its design bases are discussed in Subsection 9.5.1, Fire protection in cable systems is described in Subsection 8.3.1.4.2.

7.2.2.1.2.2.4 General Design Criterion 10

The RPS is designed to monitor certain reactor parameters, sense abnormalities, and to scram the reactor thereby preventing fuel design limits from being exceeded when trip points are exceeded. Scram trip set points are selected based on operating experience and by the safety design basis. There is no case in which the scram trip set points allow the core to exceed the thermal/hydraulic safety limits.

The system is designed to assure that the specified fuel and Reactor Coolant Pressure Boundary (RCPB) design limits are not exceeded during conditions of normal or abnormal operation.

7.2.2.1.2.2.5 General Design Criterion 13

Instrumentation is provided to monitor variables and systems over their respective anticipated ranges for normal operational, anticipated operational occurrences, and accident conditions to assure adequate safety. Each system input is monitored and annunciated.

7.2.2.1.2.2.6 General Design Criterion 15

The RPS acts to provide sufficient margin to assure that the design conditions of the RCPB are not exceeded during any condition of normal operation including anticipated operational occurrences. If the monitored variables exceed their predetermined settings, the system automatically responds to maintain the variables and systems within allowable design limits.

7.2.2.1.2.2.7 General Design Criterion 19

Controls and instrumentation are provided in the main control room. The reactor can also be shutdown in an orderly manner from outside the main control room as described in Subsection 7.4.1.4.

7.2.2.1.2.2.8 General Design Criterion 20

The system constantly monitors the appropriate plant variables to maintain the fuel barrier and primary coolant pressure boundary and initiates a scram automatically when the variables exceed the established setpoints.

7.2.2.1.2.2.9 General Design Criterion 21

The system is designed with four redundant instrument channels and four independent and separated logic divisions and actuator divisions. No single failure can prevent a scram. The system can be tested during plant operation to assure its reliability.

7.2.2.1.2.2.10 General Design Criterion 22

The redundant portions of the system are separated so that no single failure or credible natural disaster can prevent a scram except the turbine scram inputs which originate in the non-seismic Turbine Building. Reactor pressure and power are diverse to the turbine scram variables. In addition, drywell pressure and water level are diverse variables.

7.2.2.1.2.2.11 General Design Criterion 23

The RPS is fail safe on loss of power. A loss of electrical power or air supply will not prevent a scram. Postulated adverse environments will not prevent a scram.

7.2.2.1.2.2.12 General Design Criterion 24

The system has no control function. It is interlocked to control systems through isolation devices.

7.2.2.1.2.2.13 General Design Criterion 25

The reactor protection system conforms to the requirements of General Criterion 25. The method of conformance is listed below:

The redundant portions of the system are designed such that no single failure can prevent a scram. Functional diversity is employed by measuring flux, pressure, and level in the reactor vessel, which are all reactivity dependent variables.

The RPS provides protection against the onset and consequences of conditions that threaten the integrity of the fuel barrier and the reactor coolant pressure boundary. Any monitored variable which exceeds the scram set point will initiate an automatic scram and not impair the remaining variables from being monitored, and if one channel fails the remaining portions of the RPS will function.

7.2.2.1.2.2.14 General Design Criterion 29

The RPS will provide a reactor scram in the event of anticipated operational occurrences.

7.2.2.1.2.3 Conformance with Industry Codes and Standards

7.2.2.1.2.3.1 IEEE 279

The reactor protection (trip) system conforms to the requirements of this standard. The following is a detailed discussion of this conformance.

7.2.2.1.2.3.1.1 General Functional Requirement (IEEE 279, Paragraph 4.1)

The following RPS trip variables provide automatic initiation of protective action in compliance with this requirement:

(1) Scram discharge volume high water level trip

(2) Main steamline isolation valve closure trip (Run mode only)

(3) Turbine stop valve closure trip

(4) Turbine control valve fast closure trip

(5) Reactor vessel low water level trip

(6) Reactor vessel high water level trip (Run mode only)

(7) Neutron monitoring (APRM) system trip

a. Neutron flux trip

b. Simulated thermal power trip

(8) Neutron Monitoring (SRM) System (non-coincident) trip (when the shorting links are removed)

(9) Neutron Monitoring (IRM) System trip

(10) Drywell high pressure trip

(11) Reactor vessel high pressure trip

The reactor system mode switch selects appropriate operating bypasses for various RPS variables in the Shutdown, Refuel, Startup, and Run modes of operation. Other manual controls, such as the discharge volume high water level bypass, the manual scram pushbutton switches, and the RPS reset switch are arranged so as to assure that the process variables providing automatic initiation of protective action will continue to remain in compliance with this requirement.

The RPS reset switches are under the administrative control of the reactor operator. The automatic initiation requirement for protective action cannot be prevented by a reset switch.

Manual reset by the operator bypasses the seal-in circuit to permit the RPS to be reset to its normally energized state when all instrument channels are within their normal (untripped) range of operation. (Administratively bypassed in the case of the discharge volume high water level).

The RPS logic, trip actuator logic, and trip actuators are designed to comply with this requirement through automatic removal of electric power to the control rod drive scram pilot valves solenoids when one or more RPS variables exceeds the specified trip set point.

7.2.2.1.2.3.1.2 Single Failure Criterion (IEEE 279, Paragraph 4.2)

The following RPS trip variables are individually implemented with four physically separated sensor channels in compliance with this requirement:

(1) Scram discharge volume high water level trip

(2) Turbine stop valve closure trip

(3) Turbine control valve fast closure trip

(4) Reactor vessel low & high water level trip

(5) Neutron monitoring (APRM) system trip

(6) Neutron monitoring (IRM) system trip

(7) Drywell high pressure trip

(8) Reactor vessel high pressure trip

(9) Main steamline isolation valve closure trip

RPS manual controls also comply with the single failure criterion. Four manual scram pushbuttons are arranged into two separate redundant groups on the principle plant console, and are separated by approximately six inches within each group to permit the operator to initiate manual scram with one motion of one hand. The two groups of manual scram pushbuttons are separated by approximately three feet, and the switch contact blocks are enclosed within metal barriers.

The reactor mode switch consists of a single manual actuator connected to four distinct switch banks. Each bank is housed within a fire retardant compartment. Contacts from each bank are wired in conduit to individual logic cabinets.

There are four separate scram discharge volume high-level bypass switches. In each division manual operation of a bypass switch and the mode switch establishes divisional bypass. Therefore, the design of the bypass function complies with this design requirement. There is no single failure of this bypass function that will defeat the safety function.

The main steam line valve closure trip operating bypass is implemented by separate mode switch contacts in a similar manner.

The turbine stop valve closure trip and control valve fast closure trip operating bypass complies with the single-failure criterion. Four pressure transmitters are mounted in two separate redundant groups connected to two separate turbine first stage pressure taps. Wiring from the pressure transmitters is routed in conduit to the termination cabinets in the main control room.

The logic configuration for the bypass provides a single bypass associated with a single division for stop valve closure and control valve fast closure. Each division provides separate input to the RPS two-out-of-four trip logic. Therefore, no single failure of this bypass circuitry will interfere with the normal protective action of the RPS trip channels.

The RPS reset switches and associated logic comply with this design requirement. The four divisions of reset switches are physically and electrically separated.

Those portions of the RPS downstream of the instrument channels also comply with this design requirement. Any postulated single failure of a given trip logic will not affect the remaining three trip logics. Similarly, any single failure of a trip actuator will not affect the remaining trip actuators, and any single failure of one trip actuator (load driver) logic will not affect the other trip actuator logic networks. The cabling associated with one scram group is routed in a conduit with no other wiring. It is physically separated from wiring to the other scram groups to preclude a single failure.

Wiring for scram solenoids A and B for one control rod group may be routed together within a single conduit.

7.2.2.1.2.3.1.3 Quality of Components and Modules (IEEE 279, Paragraph 4.3)

The following RPS trip variables are implemented with components and modules which exhibit high quality and high reliability characteristics:

(1) Scram discharge volume high water level trip;

(2) Main steamline isolation valve closure trip (Run mode only)

(3) Turbine stop valve closure trip;

(4) Turbine control valve fast closure trip;

(5) Reactor vessel low water level trip;

(6) Reactor vessel high water level trip (Run mode only);

(7) Neutron Monitoring (APRM) System trip;

a. Neutron flux trip,

b. Simulated thermal power trip,

(8) Neutron Monitoring (SRM) System (non-coincident) trip (when shorting links are removed)

(9) Neutron Monitoring (IRM) System trip;

(10) Drywell high pressure trip;

(11) Reactor vessel high pressure trip.

The RPS manual switches are also selected for quality and reliability.

The RPS trip logic, trip actuator logic and trip actuators are solid state circuits of quality and reliability.

7.2.2.1.2.3.1.4 Equipment Qualification (IEEE 279, Paragraph 4.4)

Conformance to equipment qualification requirements for the RPS is discussed in Sections 3.10 and 3.11.

7.2.2.1.2.3.1.5 Channel Integrity (IEEE 279, Paragraph 4.5)

The components of the following RPS trip variables are specified to operate under normal and abnormal conditions of environment, energy supply, and accidents:

(1) Scram discharge volume high water level trip;

(2) Main steamline isolation valve closure trip;

(3) Turbine stop valve closure trip (see Subsection 7.2.2.1.1.1.9.1);

(4) Turbine control valve fast closure trip (see Subsection 7.2.2.1.1.1.9.1);

(5) Reactor vessel low and high water level trips;

(6) Neutron Monitoring (APRM) System trip

a. High neutron flux,

b. Simulated high thermal power, and

c. Neutron Monitoring System (non-coincident) trip (when shorting links are removed);

(7) Neutron Monitoring (IRM) System trip;

(8) Drywell high pressure trip;

(9) Reactor vessel high pressure trip.

The RPS trip logic, trip actuators, and trip actuator logic, are designed to be operable under normal and abnormal conditions of environment, energy supply, malfunctions and accidents.

7.2.2.1.2.3.1.6 Channel Independence (IEEE 279, Paragraph 4.6)

The following RPS trip variables are physically separated and electrically isolated from one another to meet this design requirement:

(1) Scram discharge volume high water level trip;

(2) Turbine stop valve closure trip;

(3) Turbine control valve fast closure trip;

(4) Reactor vessel low and high-water level trips;

(5) Drywell high-pressure trip;

(6) Reactor vessel high-pressure trip;

(7) Neutron monitoring trip; and

(8) MSIV closure trip.

The four channels of the turbine variables are physically separated.

The main steamline isolation valve closure trip is derived from eight individual sensors paired to provide four RPS channels.

The eight IRM channels are physically and electrically separated into four groups, and the four APRM redundant channels are electrically isolated and physically separated from one another so as to comply with this design requirement.

The manual scram pushbutton is a division component. The redundant manual trip divisions are physically separated to comply with this design requirement.

The mode switch banks are physically separated and electrically isolated to comply with this design document.

The circuitry for the RPS trip variable operating bypasses complies with this design requirement. Sufficient physical separation and electrical isolation exists to assure that the redundant operating bypass channels are satisfactorily independent.

The four RPS reset logic inputs to the trip actuators are physically separated. Similarly, the RPS trip logic and trip actuator logics are physically separated. The wiring to each rod group scram solenoids A and B is routed in totally enclosed metallic raceways with no other wiring.

7.2.2.1.2.3.1.7 Control and Protection System Interaction (IEEE 279, Paragraph 4.7)

The channels for the following RPS trip variables are electrically isolated and physically separated from the plant control systems in compliance with this design requirement:

(1) Scram discharge volume high water level trip

(2) Main steamline isolation valve closure trip

(3) Turbine stop valve closure trip

(4) Turbine control valve fast closure trip

(5) Reactor vessel low and high water level trip

(6) Neutron Monitoring (APRM) System trip

(7) Neutron Monitoring (IRM) System trip

(8) Neutron Monitoring System (non-coincident) trip (when shorting links are removed)

(9) Drywell high-pressure trip

(10) Reactor vessel high-pressure trip

Outputs to annunciators in the main control room and to the PMS which provide a written log of the channel trips are through Class 1E isolation devices. There is no single failure that will prevent proper functioning of any protective function when it is required.

Within the IRM and APRM modules (i.e., prior to their output trip unit driving the RPS), analog outputs are derived for use with main control room meters, recorders, and PMS. Electrical isolation has been incorporated into the design at this interface to prevent any single failure from influencing the protective output from the trip module. The trip module outputs are physically separated and electrically isolated from other plant equipment in their routing to the RPS panels.

The manual scram pushbutton has no control system interaction.

The RPS mode switch is used for protective functions and restrictive interlocks on control rod withdrawal and refueling equipment movement. Additional isolated contacts of the mode switch are used to disable certain computer inputs when the alarms would represent incorrect information for the operator. No control functions are associated with the mode switch. Hence, the switch complies with this design requirement. The system interlocks to control systems only through isolation devices so that no failure or combination of failures in the control system will have any effect on the RPS.

The RPS scram discharge volume high water level trip operating bypass complies with this design requirement. An output is given to the control rod block circuitry to prevent rod withdrawal whenever the trip channel bypass is in effect. The system interlocks to control rod block only through isolation devices so that no failure or combination of failures in the control system will have any effect on the RPS. The main steamline isolation valve closure trip bypass has no interaction with any control system in the plant.

Turbine stop valve and control valve trip bypasses have no interaction with any control system in the plant.

The RPS logic is totally separate from any plant control system.

The scram solenoids are physically separate and electrically isolated from the other portions of the control rod drive hydraulic control unit (HCU).

The transmission of signals from the RPS to control systems is through isolation devices which are part of the RPS. No credible failure at the output of these isolation devices can prevent the RPS from meeting its minimum performance requirements. There are no single random failures which can cause a control system action that results in a condition requiring action by the RPS designed to protect against that condition.

The only single credible event that can cause a control system action resulting in a condition requiring protective action and can concurrently prevent operation of a portion of the RPS is a safe shutdown earthquake. For this event, the Turbine Stop Valve Closure Trip and Turbine Control Valve Fast Closure Trip may be disabled. The reactor vessel high-pressure and high-power trips provide diverse protection for this event.

7.2.2.1.2.3.1.8 Derivation of System Inputs (IEEE 279, Paragraph 4.8)

The following RPS trip variables are direct measures of a reactor overpressure condition, a reactor over-power condition, a gross fuel damage condition, or abnormal conditions within the reactor coolant pressure boundary:

(1) Reactor vessel low and high water level trips;

(2) Neutron Monitoring (APRM) System trip;

a. Upscale trip,

b. Thermal trip;

(3) Neutron Monitoring (IRM) System trip;

(4) Drywell high-pressure trip; and

(5) Reactor vessel high pressure trip.

The measurement of scram discharge volume water level is an appropriate variable for this protective function. The desired variable is available volume to accommodate a reactor scram. However, the measurement of consumed volume is sufficient to infer the amount of remaining available volume since the total volume is a fixed, predetermined value established by the design.

The measurement of main steamline isolation valve position and turbine stop valve position is an appropriate variable for the reactor protection system. The desired variable is loss of the reactor heat sink; however, isolation or stop valve closure is the logical variable to infer that the steam path has been blocked between the reactor and the heat sink.

Due to the normal throttling action of the turbine control valves with changes in the plant power level, measurement of control valve position is not an appropriate variable from which to infer the desired variable, which is rapid loss of the reactor heat sink. Consequently, a measurement related to control valve closure rate is necessary.

Protection system design practice has discouraged use of rate sensing devices for protective purposes. In this instance, it was determined that detection of hydraulic actuator operation would be a more positive means of determining fast closure of the control valves.

Loss of hydraulic pressure in the electrohydraulic control (EHC) oil lines which initiates fast closure of the control valves is monitored. These measurements provide indication that fast closure of the control valves is imminent.

This measurement is adequate and a proper variable for the protective function taking into consideration the reliability of the chosen sensors relative to other available sensors and the difficulty in making direct measurements of control valve fast-closure rate.

Since the mode switch is used to bypass certain RPS trips depending upon the operating state of the reactor, the selection of particular contacts to perform this logic operation is an appropriate means for obtaining the desired function.

The turbine stop valve closure trip bypass and control valve fast closure trip operating bypass permit continued reactor operation at low-power levels when the turbine stop or control valves are closed. The selection of turbine first stage pressure is an appropriate variable for this bypass function. In the power range of reactor operation, turbine first stage pressure is essentially linear with increasing reactor power. Consequently, this variable provides the desired measurement of power level.

7.2.2.1.2.3.1.9 Capability for Sensor Checks (IEEE 279, Paragraph 4.9)

During reactor operation, the analog outputs of each of the redundant devices for the following RPS trip variables may be directly cross-compared to meet this requirement:

(1) Reactor vessel low and high water level trip;

(2) Drywell high-pressure trip; and

(3) Reactor vessel high-pressure trip;

(4) Scram discharge volume high water level trip.

During reactor operation, one transmitter of each of these variables may also be taken out-of-service at a time to perform calibration to a standard under administrative control. During this test, operation of the sensor and the RPS trip unit may be confirmed. At the conclusion of the test, administrative control must be used to ensure that the sensor has been properly returned to service. Annunciators and status lights continually indicate the out-of-service condition of all trip units.

In addition all trip modules may be tested with divisional trip logic by injecting an electronic calibration signal into the trip module input.

During reactor operation, the sensors associated with the scram discharge volume highwater level trip may be valved out of service to perform a functional test. During the test, one RPS trip logic will be tripped and will produce both main control room annunciation and computer logging of the trip. At the conclusion of the test, administrative control is used to assure that the sensors have been returned to service.

The main steamline isolation valve position switches are tested during valve movements which cause the limit switches to operate at the setpoint value of the valve position.

For any single valve closure test, any one of four instrument will be tripped. This arrangement permits single valve testing without corresponding tripping of the RPS.

The turbine stop valve position switches are also tested during valve movements which cause the limit switches to operate at the setpoint value. For any test of a single stop valve closure, an instrument channel will be placed in a tripped condition.

The turbine control valve fast closure oil pressure switches may be tested during the routine turbine system tests. During any control valve fast-closure test, one RPS trip logic will be tripped and will produce both main control room annunciation and computer logging of the trip.

During reactor operation in the RUN mode, the IRM detectors are stored below the reactor core in a low flux region. Movement of the detectors into the core will permit the operator to observe the instrument response from the different IRM channels and will confirm that the instrumentation is operable.

In the power range of operation, the individual LPRM detectors will respond to local neutron flux and provide the operator with an indication that these instrument channels are responding properly. The four APRM channels may also be observed to respond to changes in the gross power level of the reactor to confirm their operation.

Each APRM instrument channel may also be calibrated with a simulated signal introduced into the amplifier input and each IRM instrument channel may be calibrated by introducing an external signal source into the amplifier input.

During these tests, proper instrument response may be confirmed by observation of instrument lights in the main control room and trip annunciators.

Proper operation of the mode switch may be verified by the operator during plant operation by performing certain sensor tests to confirm proper RPS operation. Movement of the mode switch from one position to another is not required for these tests since the connection of appropriate sensors to the RPS logic as well as the bypass of inappropriate sensors may be confirmed from the sensor tests.

7.2.2.1.2.3.1.10 Capability for Test and Calibration (IEEE 279, Paragraph 4.10)

The following RPS trip variable sensors may be tested by cross-comparison of channels. They also have provisions for sensor testing and calibration during reactor operation:

(1) Reactor vessel low and high water level trip;

(2) Neutron Monitoring (APRM) System trip;

(3) Neutron Monitoring (IRM) System trip;

(4) Drywell high-pressure trip;

(5) Reactor vessel high pressure trip.

In addition each channel trip unit may be calibrated individually for each process input by introducing an electronic calibration signal into the trip module to verify proper trip actuation.

During plant operation, the operator can confirm that the main steamline isolation and turbine stop valve limit switches operate during valve motion from full open to full closed and vice versa by comparing the time that the RPS trip occurs with the time that the valve position indicator lights in the control room signaling that the valve is fully open and fully closed. This test does not confirm the exact setpoint, but does provide the operator with an indication that the limit switch operates between the limiting positions of the valve. During reactor shutdown, calibration of the main steamline isolation and turbine stop valve limit switch setpoint is at a valve position equal to the value in the Operational Requirements Manual (ORM).

The APRMs are calibrated to reactor power by using a reactor heat balance and the Traversing In-Core Probe (TIP) System to establish the relative local flux profile. LPRM gain settings are determined from the local flux profiles measured by the TIP System once the total reactor heat balance has been determined.

The gain-adjustment-factors for the LPRMs are produced as a result of the process computer nuclear calculations involving the reactor heat balance and the TIP flux distributions. These adjustments, when incorporated into the LPRMs, permit the nuclear calculations to be completed for the next operating interval and establish the APRM calibration relative to reactor power.

During reactor operation, one manual scram pushbutton may be depressed to test the proper operation of the switch and division trip logic.

Once the RPS division logic has been reset, the other switches may be depressed to test their operation one at a time. For each such operation, a main control room annunciation will be initiated and the performance monitoring system will print the identification pertinent to the trip.

Operation of the reactor system mode switch from one position to another may be employed to confirm certain aspects of the RPS trip channels during periodic test and calibration at shutdown only. During tests of the trip channels, proper operation of the mode switch contacts may be easily verified by noting that certain sensors are connected to the RPS logic and that other sensors are bypassed in the RPS logic in an appropriate manner dependent on by the position of the mode switch.

In the startup and run modes of plant operation, procedures are used to confirm that scram discharge volume high water level sensor trip channels cannot be bypassed as a result of the manual bypass switches. In the shutdown and refuel modes of plant operation, a similar procedure may be used to bypass all four scram discharge volume trip channels. Due to the discrete ON/OFF nature of the bypass function, calibration is not meaningful.

A manual scram switch permits each individual instrument channel, and trip logic to be tested on a periodic basis. Testing of each process sensor of the protection system also affords an opportunity to verify proper operation of these components.

7.2.2.1.2.3.1.11 Channel Bypass or Removal from Operation (IEEE 279, Paragraph 4.11)

The following RPS trip variables have no provision for sensor removal from service because of the use of valve position limit switches as the channel sensor. Channel bypass is discussed in Subsections 7.2.1.1.4.4.2 and 7.2.1.1.4.4.3.

(1) Main steamline isolation valve closure trip and

(2) Turbine stop valve closure trip

Transmitters are normally tested during reactor operation by cross-comparison of channels. However, transmitters, level switches and pressure switches, may be valved out of service and returned to service under administrative control procedures. Since only one sensor is valved out-of-service at any given time during the test interval, protective capability for the following RPS trip variables is maintained through the remaining redundant instrument channels:

(3) Reactor vessel low and high water level trip

(4) Drywell high pressure trip

(5) Reactor vessel high pressure trip

(6) Scram discharge volume high water level trip

(7) Turbine control valve fast closure trip

Pressure switches are normally tested by removing the sensor from service. Since only one switch is removed at any given time during the test interval, protective capability from the remaining RPS pressure switch inputs is maintained.

The NS^4/RPS division of sensor bypass switches is provided to allow the bypass of a single division for test/calibration. When the bypass is in operation, an annunciator in the main control room is actuated. Only the non-coincident NMS trip (when shorting links are removed) is not bypassed by the NS^4/RPS division of sensor bypasses.

The mode switch produces operating bypasses which need not be annunciated because they are removed by normal reactor operating sequence.

7.2.2.1.2.3.1.12 Operating Bypasses (IEEE 279, Paragraph 4.12)

The following RPS trip variables have no provision for an operating bypass:

(1) Reactor vessel low water level trip;

(2) Neutron Monitoring (APRM) System trip;

(3) Drywell high pressure trip and

(4) Reactor vessel high pressure trip.

An operating bypass of the scram discharge volume high water level trip is provided in the main control room for the operator to bypass the trip outputs in the shutdown and refuel modes of operation. Control of this bypass is achieved through administrative means, and its only purpose is to permit reset of the RPS following reactor scram to allow draining of the scram discharge volume. The bypass is manually initiated and must be manually removed to commence withdrawal of control rods after a reactor shutdown.

An operating bypass is provided for the main steamline isolation valve closure trip. The bypass requires that the reactor system mode switch, which is under the administrative control of the operator, be placed in the shutdown, refuel, or startup positions. The only purpose of this bypass is to permit the RPS to be placed in its normal energized state for operation at low power levels with the main steamline isolation valves closed or not fully open.

An operating bypass is provided for the neutron monitoring (IRM) system trip when the reactor mode switch is placed in the run position.

An operating bypass is provided for the reactor vessel high water level trip. The bypass requires that the reactor system mode switch, which is under the administrative control of the operator, be placed in shutdown, refuel, or startup positions.

For each of these operating bypasses, four independent bypass divisions are provided through the mode switch to assure that all of the protection system criteria are satisfied.

An operating bypass of the turbine stop valve and control valve fast closure trip is provided whenever the turbine is operating at an initial power level below 33.3% of rated power. The purpose of the bypass is to permit the RPS to be placed in its normal energized state for operation at low power levels with the turbine stop valves not fully open.

During normal plant operation above the switch setpoint, the bypass circuitry is in its passive, deenergized state. At these conditions, removal of the bypass for periodic test is permitted since it has no effect on plant safety. Under plant conditions at or below the switch setpoint, one bypass channel may be removed from service at a time without initiating protective action or affecting plant safety. This removal from service is accomplished under administrative control of plant personnel.

7.2.2.1.2.3.1.13 Indication of Bypasses (IEEE 279, Paragraph 4.13)

The mode switch produced operating bypasses need not be annunciated because they are removed by normal reactor operating sequence. Although operating bypasses do not require annunciation, certain operating bypasses are annunciated in the main control room. The discharge volume high water level trip operating bypass, the main steam line isolation valve closure trip operating bypass, and the turbine stop and control valve fast-closure trips operating bypass are individually annunciated to the operator.

The main control room operator must exercise administrative control over nonoperating bypasses such as valving out-of-service of one RPS trip variable sensor at a time. The out of service condition is manually alarmed. To indicate a sensor bypass, the operator will manually

actuate the respective NS4/RPS sensor channel bypassed annunciator corresponding to the given sensor division. Also, the trip module in calibration will cause automatic actuation of the system out-of-service annunciator.

7.2.2.1.2.3.1.14 Access to Means for Bypassing (IEEE 279, Paragraph 4.14)

The operator has administrative control of the sensor instrument valves, as well as their associated trip module calibration controls.

Manual bypassing of any IRM or APRM channel is accomplished with main control room

NS^4/RPS division of sensor bypass switches under the administrative control of the operator.

Manual controls for the scram discharge volume high water level trip operating bypass and the main steamline isolation valve closure trip operating bypass are located in the main control room, and under the direct administrative control of the operator. Manual keylock switches are used to control these operating bypasses.

The mode switch selects the appropriate sensors for scram functions and provides appropriate trip bypasses and bypass permissive for the selected mode. The mode switch is a keylock switch under the administrative control of plant personnel.

Divisional channel bypasses exist for all essential variables, except the non-coincident NMS channels which can be bypassed by individual selector switches. Only one division may be bypassed at a time, which converts the RPS system logic from a two-out-of-four to a two-out-of-three logic trip system. Interlocks are provided to prevent bypassing more than one logic division at a time. There are four keylocked bypass switches, one for each logic division, located in the main control room. Bypassing any single system logic division will not inhibit protective action when required.

7.2.2.1.2.3.1.15 Multiple Set Points (IEEE 279, Paragraph 4.15)

The design requirement is not applicable to the following RPS trip variables because the set point values are fixed and do not vary with other reactor or plant parameters;

(1) Scram discharge volume high water level trip

(2) Main steamline isolation valve closure trip

(3) Turbine stop valve closure trip

(4) Turbine control valve fast closure trip

(5) Reactor vessel low and high water level trip

(6) Drywell high pressure trip

(7) Reactor vessel high pressure trip

The trip setpoint of each IRM channel is established for each range of IRM operation. The IRM is a linear, half-decade per range instrument. Therefore, as the operator switches an IRM from one range to the next, the trip set point tracks the operator's selection.

In the run mode APRM system simulated thermal power trip varies automatically with the recirculation flow, and in modes other than run the APRM setdown function selects a more restrictive scram trip setpoint at a fixed 15%. The devices used to prevent improper use of the less restrictive setpoints are designed in accordance with criteria regarding performance and reliability of protection system equipment. For further discussion refer to Section 7.6.1.5.

Operation of the mode switch from one position to another bypasses various RPS trip channels in accordance with the reactor conditions implied by the given position of the mode switch.

7.2.2.1.2.3.1.16 Completion of Protective Action Once it is Initiated (IEEE 279, Paragraph 4.16)

The sensor output of the following RPS trip variables remains in a tripped state whenever the trip set point is exceeded:

(1) Scram discharge volume high water level trip

(2) Main steam line isolation valve closure trip

(3) Turbine stop valve closure trip

(4) Turbine control valve fast closure trip

(5) Reactor vessel low and high water level trip

(6) Neutron Monitoring (APRM) System trip

(7) Neutron Monitoring (IRM) System trip

(8) Drywell high pressure trip

(9) Reactor vessel high pressure trip

It is only necessary that the process sensors remain in a tripped condition for a sufficient length of time to trip the analog trip modules and operate the seal-in circuitry provided the two-out-of-four logic is satisfied. Once this action is accomplished, the trip actuator logic proceeds to initiate reactor scram regardless of the state of the process sensors that initiated the sequence of events.

Once the manual scram pushbuttons are depressed, the trip actuator logic proceeds to initiate reactor scram regardless of the state of the manual scram pushbuttons.

The function of the mode switch is to provide appropriate RPS trip channels for the RPS trip logic on a steady-state basis for each of the four given reactor operating states: SHUTDOWN, REFUEL, STARTUP and RUN. Protective action, in terms of the needed transient response, is derived from the other portions of the trip channels independent of the mode switch. Hence, the mode switch does not influence the completion of protective action in any manner.

The turbine operating bypass is placed into effect only when the turbine first stage pressure is below 33.3% of reactor power. For plant operation above this setpoint, the trip channels will initiate protective action once the division logics trip and seal in, and the actuators have deenergized the scram pilot valve solenoids.

7.2.2.1.2.3.1.17 Manual Actuation (IEEE 279, Paragraph 4.17)

Four manual scram pushbutton controls are provided on the principle plant console to permit manual initiation of reactor scram at the division level. The four manual scram pushbuttons (one in each of the four RPS trip logic divisions) are arranged in two-out-of-four logic. Failure of an automatic RPS function cannot prevent the manual portions of the system from initiating the protective action. The manual scram pushbuttons are wired as close as practicable to the scram load drivers in order to minimize the dependence of manual scram capability on other equipment.

Additional back-up to these manual controls is provided by the SHUTDOWN position of the Reactor System Mode Switch.

No single failure in the manual or automatic portions of the system can prevent either a manual or automatic scram.

7.2.2.1.2.3.1.18 Access to Set Point Adjustments, Calibration, and Test Points (IEEE 279, Paragraph 4.18)

During reactor operation, access to set point or calibration controls is not possible for the following RPS trip variables:

(1) Main steamline isolation valve closure trip

(2) Turbine stop valve closure trip

(3) Turbine control valve fast closure trip

NOTE - Turbine stop valve closure and turbine control valve fast closure trips may be accessible with radiation exposure.

Access to setpoint adjustments, calibration controls, and test points for the following RPS trip variables is under the administrative control of plant personnel:

(4) Scram discharge volume high water level trip

(5) Reactor vessel low and high water level trips

(6) Neutron monitoring (APRM) system trip

(7) Neutron monitoring (IRM) system trip

(8) Drywell high pressure trip

(9) Reactor vessel high pressure trip

7.2.2.1.2.3.1.19 Identification of Protective Actions (IEEE 279, Paragraph 4.19)

When any one of the redundant sensor trip modules exceeds its setpoint value for the following RPS trip variables, a main control room annunciator is initiated to identify the particular variable:

(1) Scram discharge volume high water level trip

(2) Turbine control valve fast closure trip

(3) Reactor vessel low water level trip

(4) Reactor vessel high water level trip

(5) Neutron monitoring system trip

(6) Drywell high pressure trip

(7) Reactor vessel high pressure trip

(8) Main steam isolation valve trip

(9) Turbine stop valve trip

Identification of the particular trip channel exceeding its set point is accomplished as a typed record from the performance monitoring system or visual observation of the annunciators.

When any manual scram pushbutton is depressed, a main control room annunciation is initiated and a performance monitoring system record is produced to identify the tripped RPS trip logic.

Identification of the mode switch in shutdown position is provided by PMS trip logic identification printout, the mode switch in shutdown position annunciator and all division trips.

7.2.2.1.2.3.1.20 Information Readout (IEEE 279, Paragraph 4.20)

The data presented to the main control room operator for each of the following RPS trip variables complies with this design requirement:

(1) Scram discharge volume high water level trip

(2) Main steam line isolation valve closure trip

(3) Turbine stop valve closure trip

(4) Turbine control valve fast closure trip

(5) Reactor vessel high water level trip

(6) Reactor vessel low water level trip

(7) Neutron monitoring system trip

(8) Drywell high pressure trip

(9) Reactor vessel high pressure trip

7.2.2.1.2.3.1.21 System Repair (IEEE 279, Paragraph 4.21)

During periodic testing of the sensor channels for the following RPS trip variables, the operator can determine any defective component and replace it during plant operation:

(1) Reactor vessel high water level trip

(2) Reactor vessel low water level trip

(3) Drywell high pressure trip

(4) Reactor vessel high pressure trip

During periodic testing of the sensor channels for the following trip variables, all defective components can be identified. Replacement and repair of failed sensors can only be accomplished during reactor shutdown. All other components can be replaced, repaired, and adjusted during plant operation.

(5) Turbine stop valve closure trip

(6) Main steamline isolation valve closure trip

(7) Scram discharge volume high water level trip

(8) Neutron monitoring system

(9) Turbine control valve fast closure trip

Provisions have been made to facilitate repair of neutron monitoring system components during plant operation except for the detector. Replacement of the detector can be accomplished during plant shutdown.

Replacement of IRM and LPRM detectors must be accomplished during plant shutdown. Repair of the remaining portions of the neutron monitoring system may be accomplished during

plant operation by appropriate bypassing of the defective instrument channel. The design of the system facilitates rapid diagnosis and repair.

7.2.2.1.2.3.1.22 Identification of Protection Systems (IEEE 279, Paragraph 4.22)

Each Nuclear System Protection system cabinet which contains RPS control room equipment is marked with the letter "NSPS" and the particular redundant portion is listed on a distinctively colored marker plate. Cabling outside the cabinets is identified specifically as Reactor Protection System wiring. The identification scheme used to distinguish between redundant cables and cable trays is described in Chapter 8. Redundant racks are identified by the color coded marker plates of instruments on the racks.

7.2.2.1.2.3.2 IEEE 308, Standard Criteria for Class 1E Power Systems for Nuclear Power Generating Stations

Each of four separate RPS divisions, which includes sensors, trip modules and logic is powered by a redundant, separate Class 1E power source and the system complies with IEEE 308. The scram solenoids are powered by two separate non-Class 1E, non-divisional uninterruptible power supplies.

7.2.2.1.2.3.3 IEEE 317, Electric Penetration Assemblies in Containment Structures for Nuclear Power Generating Stations

See Subsection 8.1.6.

7.2.2.1.2.3.4 IEEE 323, Standard for Qualifying Class 1E Equipment for Nuclear Power Generating Stations

The general Guide for Qualifying Class 1E Equipment is presented in Section 3.11. Records covering all essential components are maintained.

7.2.2.1.2.3.5 IEEE 336, Installation, Inspection, and Testing Requirements for Instrumentation and Electrical Equipment During the Construction of Nuclear Power Generating Stations

The IEEE 336 requirements for installation, inspection and testing of Class 1E instruments and control equipment and systems during construction have been met through a quality assurance program. Conformance to IEE 336-1971 (ANSI N45.2.4-1972) is discussed in conjunction with Regulatory Guide 1.30. Refer to USAR Section 1.8.

7.2.2.1.2.3.6 IEEE 338, Standard Criteria for Periodic Testing of Nuclear Power Generating Station Safety Systems

Periodic Testing of Protection Systems is complied with by being able to test the RPS from sensors to final actuators at any time during plant operation. The test must be performed in overlapping portions. The sensors associated with the NMS cannot be tested during operation.

7.2.2.1.2.3.7 IEEE 344, Recommended Practices for SeismicQualification of Class 1E Equipment for Nuclear Power Generating Stations

Seismic Qualification of Class 1E Electric Equipment requirements are satisfied by all Class I RPS equipment as described in Section 3.10.

7.2.2.1.2.3.8 IEEE 379, Standard Application of the Single-Failure Criterion to Nuclear Power Generating Station Class 1E System

Application of the single-failure criterion to nuclear power generating station protection systems requirements are satisfied by consideration of the different single failure modes and carefully designing all single-failure modes out of the system, through redundant logic design and proper separation of redundant portions of the system.

7.2.2.1.2.3.9 IEEE 384, Standard Criteria for Independence of Class 1E Equipment and Circuits

This standard requires that redundant portions of the system be physically separated from each other and from Non-Class 1E circuits. This includes process sensors, wiring, logic and actuators in plant and control room wireways and main control room panels. In addition, short circuit protection by grounded conduit or physical separation is required between wiring carrying essential power and nonessential RPS power. The standard requires that redundant sensors and their connections to the process system be sufficiently separated to assure that functional capability of the protection system will be maintained despite any single design basis event or resulting affect. This provision does not apply to turbine stop valve and control valve fast closure trips in the nonseismic turbine building during or after a safe shutdown earthquake. Reactor pressure and power are diverse variables.

The effect on sensor and sensing lines as a result of design basis events are discussed in Subsection 7.2.1.2.8. Redundant pressure taps are located at widely divergent points around the reactor vessel. The sensing lines are routed to the sensors through separate penetrations in the drywell. Redundant sensors are located on separated racks outside the drywell. The location and routing of sensors, sensing lines, and pressure taps meet the separation requirements of IEEE 384, section 5.8.

The discussion of compliance with the separation requirements of IEEE 384 for Class 1E power supplies for the RPS is provided in Chapter 8. RPS trip modules, logic and actuators are separated into four divisions contained in four separate logic panels. Whenever signals must pass between redundant logic divisions or between divisional and nondivisional circuits, they are electrically and physically isolated.

7.2.2.1.3 Additional Design Considerations Analyses

7.2.2.1.3.1 Spurious Rod Withdrawals

Spurious control rod withdrawal will not normally cause a scram. A control rod withdrawal block may occur, however, (see Subsection 7.7.2.2.3). A scram will occur, however, if the spurious control rod withdrawal causes the average flux to exceed the trip setpoint.

7.2.2.1.3.2 Loss of Plant Instrument Air System

Loss of plant instrument air will cause gradual opening of the scram valves on the hydraulic control units which will insert all control rods. Full insertion will result as air pressure is lost at the scram valves.

7.2.2.1.3.3 Loss of Cooling Water to Vital Equipment

There is no loss of cooling water which will affect the RPS.

7.2.2.1.3.4 Plant Load Rejection

Electrical grid disturbances could cause a significant loss of load which would initiate a turbine-generator overspeed trip and control valves fast closure, which may result in a reactor scram. The reactor scram occurs to anticipate an increase in reactor vessel pressure due to shutting off the path of steam flow to the turbine. Any additional increase in pressure will be prevented by the safety/relief valves which will open to relieve reactor pressure and close as pressure is reduced. The reactor core isolation cooling (RCIC) or high pressure core spray (HPCS) systems will automatically actuate and provide vessel makeup water if required.

The fuel temperature or pressure boundary thermal/hydraulic limits are not exceeded during this event (Chapter 15).

7.2.2.1.3.5 Turbine Trip

Initiation of turbine trip by the turbine system closes the turbine stop valves which may initiate a reactor scram. The stop valve closure scram anticipates a reactor pressure or power scram due to turbine stop valves closure. Any additional increase in reactor vessel pressure will be prevented by the safety/relief valves which will open to relieve reactor vessel pressure and close as pressure is reduced. The RCIC and HPCS will automatically actuate and provide vessel makeup water if low water level occurs.

Initiation of turbine trip by loss of condenser vacuum causes closure of the turbine stop valves and main steam isolation valves, initiating a reactor scram.

The fuel temperature or pressure boundary, thermal/hydraulic limits are not exceeded during these events (Chapter 15).

7.2.3 References

(1) GE Topical Report, Power Generation Control Complex, NEDO-10466-A.

(2) NUREG-0124 (Supplement to NUREG 75/110), Safety Evaluation Report, GESSAR 238 Nuclear Island Standard Design Supplement 1, September 1976, pp. 7-78, 15-3,4.

(3) NUREG-0151, SER, GESSAR 251, Nuclear Steam Supply System Standard Design, March 1977.

(4) NUREG-0124 Supplement 2, Jan. 1977, pp. 15-1,2.

(5) Nuclear Station Engineering Department Maintenance Standard MS-02.00, Maintenance of Equipment Qualification Program Manual.

7.3 ENGINEERED SAFETY FEATURE SYSTEMS

7.3.1 Description

This section will examine and discuss the instrumentation and control aspects of the following plant Engineered Safety Feature (ESF) Systems and the Essential Auxiliary Support (EAS) Systems.

ESF Systems

Emergency Core Cooling System (ECCS)
- High Pressure Core Spray System (HPCS)
- Automatic Depressurization System (ADS)
- Low Pressure Core Spray System (LPCS)
- RHR System, Low Pressure Coolant Injection Mode (LPCI)

Containment and Reactor Vessel Isolation Control System (CRVICS)
Main Steam Isolation Valve Leakage Control System (MSIVLCS)
Combustible Gas Control System (CGCS)
Containment Heat Removal Systems
- RHR System, Containment Spray Mode
- RHR System, Suppression Pool Cooling Mode

Standby Gas Treatment System (SGTS)
Suppression Pool Makeup System (SPMU)
Main Control Room HVAC System
Overpressurization Protection System
Reactor Core Isolation Cooling System
RHR System, Feedwater Leakage Control Mode (FWLC)

EAS Systems

Standby AC & DC Power System (Including Diesel Generators)
Shutdown Service Water System (SSWS)
Diesel Fuel Oil System
ESF Ventilation Systems
- Essential Switchgear Heat Removal System
- ECCS Equipment Room HVAC System
- Diesel Generator Room HVAC System
- Shutdown Service Water Pump Room HVAC System
- Combustible Gas Control System Equipment Cubicle Cooling System

7.3.1.1 System Description

7.3.1.1.1 Emergency Core Cooling Systems (ECCS) - Instrumentation and Controls

7.3.1.1.1.1 System Identification

The ECCS are a network of the following systems.

(1) High pressure core spray (HPCS) system.

(2) Automatic depressurization (ADS) system.

(3) Low pressure core spray (LPCS) system.

(4) Low pressure coolant injection (LPCI) mode of the residual heat removal system (RHR).

The purpose of ECCS instrumentation and controls is to initiate appropriate responses from the system to ensure that the fuel is adequately cooled in the event of a design basis reactor accident. The cooling provided by the system restricts the release of radioactive materials from the fuel by preventing or limiting the extent of fuel damage following situations in which coolant is lost from the reactor coolant pressure boundary.

The ECCS instrumentation detect a need for core cooling systems operation, and the trip systems initiate the appropriate response.

Included in this Section is a discussion of protective considerations which are taken between the high pressure reactor coolant system and the low pressure ECCS system. The high pressure/low pressure interlocks are examined in subsection 7.6.1.3.

7.3.1.1.1.2 Network Power Sources

The instrumentation and controls of the ECCS network system are powered by the 125 Vdc and 120 Vac Essential systems. The redundancy and separation of these systems are consistent with the redundancy and separation of the ECCS functional requirements. The power sources for the ECCS network systems are described in detail in Chapter 8.

7.3.1.1.1.3 High Pressure Core Spray (HPCS) System - Instrumentation and Controls

7.3.1.1.1.3.1 System Identification

The control and instrumentation components for the high pressure core spray (HPCS) system except as noted in 7.3.1.1.1.3.11 are located outside the containment. Pressure and level transmitters used for HPCS initiation are located on racks inside the containment, but outside the drywell. Cables connect the sensors to the comparator input cabinet and from the input cabinet to the trip logic output cabinets. The system is arranged to allow a full flow functional test during normal reactor power operation. The piping and instrumentation diagram is shown in Drawing M05-1074, the HPCS power system is shown in drawing E02-1HP99, and the HPCS one line diagram is shown in Drawing 762E298AC. Significant HPCS design parameters are provided on Table 6.3-8.

7.3.1.1.1.3.2 Power Sources

The HPCS system is designed to operate from normal offsite power sources or from the Division 3 diesel generator if offsite power is not available. Level sensors and high drywell pressure sensors are powered by 24-Vdc from two separate and independent divisions (DIV-3 & DIV-4).

7.3.1.1.1.3.3 Equipment Design

The high pressure core spray system operates as an isolated system independent of electrical connections to any other system except the normal ac/dc power supply. The instrumentation necessary for the control and status indication of the HPCS system are classified as essential and as such are designed and qualified in accordance with applicable IEEE Standards.

7.3.1.1.1.3.4 Initiating Circuits

Reactor vessel low water level is monitored and indicated by four level transmitters (two in Div. 3 and two in Div. 4) that sense the difference between the pressure due to a constant reference leg of water and the pressure due to the actual height of water in the vessel. Each level transmitter provides an input to an analog trip module. The output signals from the analog trip modules feed a one-out-of-two twice logic. The initiation logic for HPCS sensors is shown in Figure 7.3-8.

Drywell pressure is monitored by four pressure transmitters (two in Div. 3 and two in Div. 4). Instrument sensing lines that penetrate the drywell allow the transmitter to communicate with the drywell interior. Each drywell high-pressure trip channel provides an input into the trip logic shown in Figure 7.3-8. The trip logic inputs are electrically connected to a one-out-of-two twice logic circuit.

The HPCS system is initiated on receipt of a valid reactor vessel low water level signal (Level 2) or drywell high-pressure signal. Makeup water is discharged to the reactor vessel until the reactor high water level (Level 8) is reached. The HPCS then automatically stops flow by closing the injection valve if the high water level signal is above the trip point. The system is arranged to allow automatic or manual operation. The HPCS initiation signal also initiates the HPCS Division 3 diesel generator.

7.3.1.1.1.3.5 Logic and Sequencing

Either reactor vessel low water level or high drywell pressure automatically starts the HPCS as indicated in Figure 7.3-8.

Two reactor vessel low water level trip settings are used to initiate the ECCS. The first low water level setting initiates the HPCS. The second low water level setting initiates the LPCI, and LPCS, and ADS. This setting also closes the main steam line isolation valves (see Subsection 7.3.1.1.2).

Two AC operated pump suction valves are provided in the HPCS pump suction. One valve lines up pump suction from the RCIC storage tank, the other from the suppression pool. The control arrangement is shown in drawing E02-1HP99. Reactor grade water in the RCIC storage tank is the preferred source. On receipt of an HPCS initiation signal, the RCIC storage tank suction valve is automatically signaled to open (it is normally in the open position) unless the pump suction from suppression pool valve is open. If the water level in the RCIC storage tank falls below a preselected level, first the suppression pool suction valve automatically opens and then the RCIC storage tank suction valve automatically closes. Two level transmitters are used to detect low water level in the RCIC storage tank. Either of the two level transmitters can cause the suppression pool suction valve to open and the RCIC storage valve to close. The suppression pool suction valve also automatically opens if high water level is detected in the suppression pool. Two level transmitters monitor this water level and either transmitter can initiate opening of the suppression pool suction valve. To prevent losing suction to the pump on a manual or automatic transfer from the RCIC storage tank to the suppression pool, the RCIC storage tank suction valve is interlocked so that the suppression pool suction valve must be open before the tank valve closes.

The instrumentation required to transfer RCIC and HPCS pumps suction from the CST to the suppression pool is seismically qualified. The instrumentation does conform to the single failure

criterion in that the instrumentation to transfer RCIC is electrical separation division 1 and the instrumentation to transfer HPCS is electrical separation division 3. The instrument sensing lines are protected from freezing by location inside the fuel building. (Q&R 421.1)

HPCS injection of water is terminated automatically with closure of the HPCS injection valve. High reactor water level (Level 8) will cause the automatic termination signal. HPCS can be terminated manually by shutting off the pump or closing the injection valve. The system must be reset, after a manual termination, before an automatic restart would be possible.

7.3.1.1.1.3.6 Bypasses and Interlocks

The HPCS pump motor, suppression pool suction valve and injection valve are provided with manual override control which permit the operator to have manual control of the system following a LOCA.

During test operation, the HPCS pump discharge can be routed to the RCIC storage tank or suppression pool. Motor-operated valves are installed in the test lines. The piping arrangement is shown in Drawing M05-1074 (HPCS P&ID), The control scheme for the valves is shown in drawing E02-1HP99. On receipt of an HPCS initiation signal, the test line valves close and remain closed. Also the valves in the test line to the RCIC storage tank are interlocked closed, if the suppression pool suction valve is not fully closed, to maintain the quantity of water in the suppression pool.

7.3.1.1.1.3.7 Redundancy and Diversity

The HPCS is actuated by reactor vessel low water level or drywell high pressure. Both of these conditions will result from a design basis loss-of-coolant accident.

The HPCS system logic requires two independent reactor vessel water level measurements to concurrently indicate the high water level condition. When the high water level setpoint (Level 8) is reached following HPCS operation, flow to the reactor vessel is stopped by closing the injection valve until such time as the low water level initiation setpoint is reached. Should this latter condition recur, HPCS will be initiated to restore water level within the reactor.

7.3.1.1.1.3.8 Actuated Devices

All automatic valves in the HPCS system are equipped with remote-manual test capability. The entire system can be manually operated from the main control room. Motor-operated valves are provided with limit switches to turn off the motor when the full open or closed positions are reached. Torque switches also control valve motor forces while the valves are seating.

An ac motor-operated HPCS pump discharge valve is provided in the pump discharge pipeline. The control scheme for this valve is shown in drawing E02-1HP99. The valve opens on receipt of the HPCS initiation signal. The pump discharge valve closes automatically on receipt of a reactor high water level signal (Level 8).

7.3.1.1.1.3.9 Separation

7.3.1.1.1.3.9.1 General

Separation within the ECCS is such that no single failure can prevent core cooling when required. Control and instrumentation equipment wiring is segregated into four separate electrical divisions designated 1, 2, 3, and 4 (Figure 7.3-9). Similar separation requirements are also maintained for the control and motive power required. System separation is as follows:

Division 1	Division 2	Division 3	Division 4
LPCS and RHR "A"	RHR "B" and "C"	HPCS	HPCS
ADS "A" RCIC	ADS "B"		

Systems shown opposite each other are considered a backup to the other. Control logic for all Division 1 systems is powered by 125 Vdc NSPS bus A and for Division 2 systems is 125 Vdc NSPS bus B. Control logic for the Division 3 portion of HPCS is powered by 125 Vdc NSPS bus C. The Division 4 portion of HPCS for the control instrumentation logic is powered by 125 Vdc NSPS bus D from RPS system.

7.3.1.1.1.3.9.2 Separation

HPCS is a Division 3 and 4 system. (Figure 7.3-9) In order to maintain the required separation, HPCS control logic, cabling, manual controls and instrumentation are mounted so that divisional separation is maintained.

7.3.1.1.1.3.10 Testability

The high pressure core spray instrumentation and control system is capable of being tested during normal unit operation to verify the operability of each system component. Testing of the initiation transmitters which are located outside the drywell is accomplished by valving out each transmitter, one at a time, and applying a test pressure source. This verifies the operability of the transmitter, as well as the calibration range. The trip channel setpoint is verified by introducing a test signal with the calibration and observing the display and indicator light on the output of the trip channel trip device (see Subsection 7.1.2.10). Main control room indications are provided.

Testing for functional operability of the control logic is accomplished by means of continuous automatic pulse testing. The Automatic Pulse Test (APT), the sixth test, discussed in RPS Testability 7.2.1.1.4.8 is also applicable for HPCS.

Availability of the control equipment is verified during manual testing of the system with the pump discharge returning to the condensate storage tank. While the plant is at power, water is injected into the condensate storage tank by the high pressure core spray system during periodic testing. A design flow functional test of the HPCS system may be performed during plant shutdown by drawing suction from the suppression pool and discharging through a full flow test return line to the suppression pool.

7.3.1.1.1.3.11 Environmental Considerations

The only components located inside the drywell for HPCS system are the solenoid valve and valve position switches for the testable check valve on the pump discharge line, and maintenance block valve position switches. All other HPCS control and instrumentation equipment is located outside the drywell and is selected to meet the environmental considerations listed in Table 3.11-5. The level transmitters, instrument sensing lines, and process taps used to detect low water level in the RCIC storage tank are physically located inside the fuel building and thus are protected from the effects of cold weather.

7.3.1.1.1.3.12 Operational Considerations

7.3.1.1.1.3.12.1 General Information

Under abnormal or accident conditions where the system is required, initiation and control are provided automatically for at least 10 minutes. After 10 minutes, operator action may be required.

7.3.1.1.1.3.12.2 Reactor Operator Information

Pressure in the HPCS pump suction line is monitored by a pressure transmitter to permit the determination of suction heat and pump performance. Numerous other indications pertinent to the operation and condition of the HPCS system are available to the control room operator as shown in Drawing M05-1074 (HPCS P&ID) and Drawing E02-1HP99.

7.3.1.1.1.3.12.3 Set Points

Instrument requirements such as range, accuracy, and function for the measured variables may be found in the Design Specification Data Sheets. See the CPS Technical Specifications and the Operational Requirements Manual (ORM) for instrument set points and allowable values.

7.3.1.1.1.4 Automstic Depressurization System (ADS) Instrumentation and Controls

7.3.1.1.1.4.1 System Identification

Automatic relief valves are installed on the main steam lines inside the drywell. The valves can be actuated in two ways; they will relieve pressure by a pressure transmitter and trip unit actuation with power or by mechanical actuation without power. The suppression pool provides a heat sink for steam relieved by these valves. Relief valve operation may be controlled manually from the control room to hold the desired reactor pressure. The depressurization by automatic blowdown is intended to reduce the pressure during a loss-of-coolant accident in which the HPCS allows selected reactor variables to exceed the ADS initiation point.

7.3.1.1.1.4.1.1 Equipment Design

The ADS consists of redundant pressure and water level sensor trip channels arranged in separated logics that control separate solenoid-operated air pilots on each valve. These pilot valves control the pneumatic pressure applied to an air cylinder operator. The operator controls the safety relief valve. Accumulators are included with the control equipment to store pneumatic energy for relief valve operation.

The accumulators can operate the safety relief valves two times at 70% of drywell design gage pressure following failure of the pneumatic supply to the accumulator. Cables from the sensors lead to two separate solid state safety system cabinets where the redundant logics are formed. Station batteries and solid state safety system power supplies energize the electrical control circuitry. The power supplies for the redundant divisions are separated to limit the effects of electrical failures. Electrical elements in the control system energize to cause the relief valves to open.

7.3.1.1.1.4.1.2 Initiating Circuits

Two ADS Subsystems for relief valve actuation are provided, ADS A and ADS B (see Figure 7.3-7). Division 1 sensors and control logic for low reactor water level and high drywell pressure initiate ADS A, and Division 2 sensors and control logic initiate ADS B. The Division 1 logic is mounted in a different cabinet than the Division 2 logic.

The reactor vessel low water level initiation setting for the ADS is selected to depressurize the reactor vessel in time to allow adequate cooling of the fuel by the LPCI or LPCS system following a loss-of-coolant accident in which the HPCS fails to perform its function adequately. The drywell high pressure setting is selected as low as possible without inducing spurious initiation of the automatic depressurization system. This provides timely depressurization of the reactor vessel if the HPCS fails to start or fails after it successfully starts following a loss-of-coolant accident.

The low pressure pump discharge pressure setting used as a permissive for automatic depressurization is selected to assure that at least one of the three RHR pumps, or the LPCS pump, has received electrical power, started, and is capable of delivering water into the vessel. The setting is high enough to assure that the pump will deliver at near rated flow without being so low as to provide an erroneous signal that the pump is actually running.

The pressure and level transmitters used to initiate one solenoid valve are separated from those used to initiate the other solenoid valve on the same ADS valve. Reactor vessel low water level is detected by six level sensors that measure differential pressure. Drywell high pressure is detected by four pressure sensors, which are located in the containment. The level instruments are piped so that an instrument sensing line break will not inadvertently initiate auto-blowdown. The drywell high pressure signals are arranged to seal into the control circuitry; they must be manually reset to clear.

Time Delay Logics are used in each ADS control division. The first time delay is initiated by reactor vessel low water level (Level 1). It provides a bypass to the required coincident high drywell pressure signal by incorporating two 6-minute delay timers in a parallel circuit. This 6-minute delay length was calculated using the considerations described in Appendix D, Item II.K.3.18. If during the 6-minute delay, a high drywell pressure signal occurs, the ADS initiation signal proceeds beyond the 6-minute delay timers. If upon completion of the 6-minute delay, a high drywell pressure signal has not occurred, the ADS initiation signal proceeds further. Thus, automatic ADS initiation is provided, if required, for events such as a break external to the drywell or a stuck open SRV. The second delay time setting before actuation of the ADS is 105 seconds. It is initiated after confirming that water level is still below Level 3 and is long enough that the HPCS has time to operate, yet not so long that the LPCI and LPCS systems are unable to adequately cool the fuel if the HPCS fails to start. An alarm in the control room is annunciated when either of the two 105-second timers is timing. Resetting the ADS initiating signals recycles the timers.

The primary level sensing logic does not seal itself in. Therefore, if the reactor level is restored sufficiently to reset the previous actuation setpoints before the 105-second timer times out, that timer automatically resets and auto-depressurization is aborted. Should additional level dips occur across the setpoints, the timer recycles with each one.

The ADS actuation initiation logic seals itself in and must be manually reset to clear. The seal-in occurs only after solenoid energization and continues even if the initiating signals clear.

There are no interlocks in the ADS circuitry which prevents the operator from manually resetting the ADS timers multiple times. However, this design is consistent with all recent GE BWR ADS designs. Deliberate repetitive operator action is required every 100-120 seconds to override ADS initiation. ADS will initiate automatically without the operator action. Symptom-oriented emergency procedures will address those instances where override of ADS is necessary. Those procedures will also address instances where confirmation of ADS actuation is required. (Q&R 421.7)

7.3.1.1.1.4.1.3 Logic and Sequencing

Three initiation signals are used for the ADS: reactor vessel low water level (level 3), drywell high pressure, and second (lower) reactor vessel low water level (level 1). Either of two logic paths will initiate automatic ADS actuation:

1. Coincident low water level (Level 3), a second (lower) low water level (Level 1), the 6-minute time delay sequentially with a 105-second time delay, and an ECCS pump running; or

2. Coincident low water level (level 3), a second water level (Level 1), a high drywell pressure, a 105-second time delay, and an ECCS pump running.

Drywell high pressure indicates a breach in the reactor coolant pressure boundary inside the drywell.

A permissive signal indicating LPCI or LPCS pump discharge pressure is also used. Discharge pressure on any one of the three LPCI pumps or the LPCS pump is sufficient to give the permissive signal which permits automatic depressurization when the LPCI or LPCS systems are operable.

After receipt of the initiation signals and after a delay provided by the 105-second time delay logic, each of the two solenoid pilot air valves are energized. This allows pneumatic pressure from the accumulator to act on the air cylinder operator. The air cylinder operator holds the relief valve open. Lights in the main control room indicate when the solenoid-operated pilot valves are energized to open a safety relief valve.

The ADS Division 1 control logic actuates the "A" solenoid pilot valve on each ADS valve. Similarly, the ADS Division 2 control logic actuates the "B" solenoid pilot valve on each ADS valve. Actuation of either solenoid pilot valve causes the ADS valve to open to provide depressurization.

Manual inhibit switches are provided which prevent automatic ADS actuation, but do not inhibit the pressure relief function, manual ADS actuation, or individual SRV control.

Manual reset circuits are provided for the ADS initiation signal and drywell high pressure signals. By manually resetting the initiation signal, the delay logic is recycled. The operator can use the reset push buttons to delay or prevent automatic opening of the relief valves if such delay or prevention is prudent.

Manual actuation pushbuttons are provided to allow the operator to initiate ADS immediately (no time delay) if required. Such initiation is performed by first rotating the collars surrounding the pushbuttons for each of two channels within one of the two divisions. An annunciator will sound to warn the operator that ADS is armed for that division. If the two pushbuttons are then depressed, the ADS valves will open. Though such manual action is immediate, the rotating collar permissives and duality of button sets combined with annunciators assure manual initiation of ADS to be a deliberate act.

Two control switches are available in the main control room for each safety/relief valve associated with the ADS. Each switch is associated with one of the two solenoid pilot valves and maintains the maximum electrical separation consistent with the required operability. The switch on the Division 1 (ESF Battery A) circuits is a three-position keylock type OFF-AUTO-OPEN located on the main control board. The OPEN position is for manual safety/relief valve operation. The Division 2 (ESF Battery B) switch may also be used for manual operation and has three positions (keylocked), OFF-AUTO-OPEN located on the Division 2 ADS panel. Manual opening of the relief valves provides a controlled nuclear system cool-down under conditions where the normal heat sink is not available.

7.3.1.1.1.4.1.4 Bypasses and Interlocks

The operator can manually inhibit and/or manually delay the depressurizing action through the use of the manual inhibit switches and/or the manual reset switches, respectively. The manual inhibit switch prevents automatic ADS actuation, but does not inhibit the pressure relief function, manual ADS actuation, or individual SRV control. The manual reset switches reset both time delay logics to zero seconds and prevent depressurization for at least another 105 seconds. The operator would make the decision to reset based on an assessment of other plant conditions. ADS is interlocked with the LPCS and RHR by means of pressure sensors located on the discharge of the LPCS or RHR pumps. These are the "low pressure ECCS pumps running" interlocks. However, there are no interlocks for manual initiation of ADS.

7.3.1.1.1.4.1.5 Redundancy and Diversity

The ADS is initiated by either a coincident low reactor vessel water and a 6-minute time delay or a coincident high drywell pressure and low reactor vessel water level. The initiating circuits for each of these parameters are redundant as described by the circuit description of this Section. Diversity is provided by HPCS.

Instrument requirements such as range, accuracy, and function for the measured variables may be found in the Design Specification Data Sheets.

7.3.1.1.1.4.1.6 Actuated Devices

Refer to Section 5.2.2.4.1 for a detailed description of nuclear safety/relief valves. For the number and location of the safety/relief valves that are designated as ADS valves refer to Drawing 796E724 Sheet 6 of 6. Each ADS valve is equipped with two solenoid pilot valves

controlled by separate divisional logic. Actuation of either solenoid will open the associated ADS valve in its power operated mode.

All ADS relief valves are actuated by any one of five methods.

(1) Automatic action in 90-120 seconds resulting from the logic chains containing the high drywell pressure trip in either Division 1 or Division 2 control logic actuation,

(2) Automatic action in 7.5 to 8 minutes resulting from the logic chains containing the 6-minute time delay in either Division 1 or Division 2 control logic actuation,

(3) Manual action by the operator,

(4) Pressure transmitter trip module contacts closing as a result of high reactor pressure, or

(5) Mechanical actuation as a result of high reactor pressure (higher than pressure in item (4)).

7.3.1.1.1.4.1.7 Separation

ADS is a Division 1 and Division 2 system except that only one set of relief valves is supplied. Each relief valve can be actuated by either of two solenoid pilot valves supplying air to the relief valve air piston operators. One of the solenoid pilot valves is operated by Division 1 logic and the other by Division 2 logic. Control logic manual controls and instrumentation are mounted so that Division 1 and Division 2 separation is maintained. Separation from Divisions 3 and 4 is likewise maintained.

7.3.1.1.1.4.1.8 Testability

ADS has two complete control logics, one in Division 1 and one in Division 2. Each control logic has two circuits, both of which must operate to initiate ADS. One circuit contains time delay logic to give HPCS an opportunity to start. The ADS instrument channels signals are tested by cross comparison between the channels which bear a known relationship to each other. Indication for each instrument channel is mounted in the respective logic cabinet. The logic is tested continuously by automatic pulse testing. The Automatic Pulse Test (APT), the sixth test, discussed in RPS Testability 7.2.1.1.4.8 is also applicable here for ADS. The instrument channel set points may be verified by introducing a test signal with the calibrator and move the signal towards trip (see Subsection 7.1.2.10). The set point is verified by observing the display and the indicator light on the output of the instrument channel trip device. Testing of ADS does not interfere with automatic operation if required by an initiation signal. The pilot solenoid valves can also be tested when the reactor is not pressurized.

For further discussion of ADS control logic testability see Subsection 7.2.1.1.4.8.

7.3.1.1.1.4.1.9 Environmental Considerations

The signal cables, solenoid valves, and safety/relief valve operators, are the only essential control and instrumentation equipment for the ADS located inside the drywell. These items, and all other equipment located outside the drywell, will operate in their worst-case environments shown in the Section 3.11 tables. Gamma and neutron radiation is also considered in the

selection of these items. Equipment located outside the drywell will also operate in their normal and accident environments.

7.3.1.1.1.4.1.10 Operational Considerations

7.3.1.1.1.4.1.10.1 General Information

The instrumentation and controls of the ADS are not required for normal plant operations. When automatic depressurization is required, it will be initiated automatically by the circuits described in this Section. No operator action is required for at least 10 minutes following initiation of the system.

7.3.1.1.1.4.1.10.2 Reactor Operator Information

A temperature element is installed on the safety/relief valve discharge piping several feet from the valve body. The temperature element is connected to a multipoint recorder in the control room to provide a means of detecting safety/relief valve leakage during plant operation. When the temperature in any safety/relief valve discharge pipeline exceeds a preset value, an alarm is sounded in the main control room. The alarm setting is enough above normal rated power drywell ambient temperatures to avoid spurious alarms, yet low enough to give early indication of safety/relief valve leakage. See 7.5.1 for discussion of suppression pool temperature monitors.

7.3.1.1.1.4.1.10.3 Set Points

Instrument requirements such as range, accuracy, and function for the measured variables may be found in the Design Specification Data Sheets. Refer to the CPS Technical Specifications and Operational Requirements Manual (ORM) for setpoints and allowable values. Discussions on instrument accuracy may be found in Topical Report NEDO-21617-A.

7.3.1.1.1.4.2 Safety-Relief Valve Subsystem

The nuclear pressure relief system is designed to prevent over-pressurization of the nuclear system that could lead to the failure of the reactor coolant pressure boundary. Details of the design bases are discussed in Subsection 5.2.2.

7.3.1.1.1.4.2.1 Equipment Design

The automatic safety-relief system (drawing E02-1NB99) consists of redundant reactor pressure instrument channels arranged in separated logics that control separate solenoid-operated air pilots on each valve. These pilot valves control the pneumatic pressure applied to an air cylinder operator. Accumulators are included with the control equipment to store the pneumatic energy for relief valve operation. SRV's are initiated by reactor vessel pressure. Cables from the sensors for vessel pressure lead to two separate logic cabinets where the redundant logics are formed. Separate station batteries power the electrical control circuitry. The power supplies for the redundant logics are separated to limit the effects of electrical failures. Electrical elements in the control system energize to cause the relief valve to open.

7.3.1.1.1.4.2.2 Initiating Circuits

Reactor pressure is detected by four pressure transmitters (2 for each division), which are located in the containment. The logic requires a two-out-of-two trip on vessel pressure to prevent inadvertent SRV actuation. The logic is arranged such that no single failure will prevent SRV actuation or cause more than one SRV to inadvertently actuate.

7.3.1.1.1.4.2.3 Logic and Sequencing

Two initiation signals are used for SRV actuation. Two-out-of-two reactor vessel high pressure signals are required to initiate the safety-relief valves. High vessel pressure indicates the need for SRV actuation to prevent nuclear steam overpressure.

After receipt of the initiation signal, each of the two solenoid pilot air valves on each safety-relief valve is energized. Either or both solenoid actuations allow pneumatic pressure from the accumulator to act on the air cylinder operator. The air cylinder operator holds the relief valve open. Lights in the main control room indicate when the solenoid-operated pilot valves are energized to open a safety-relief valve. The SRV's remain open until system pressure drops below the high pressure setpoint.

Manual system-level initiation of the SRV's is accomplished by a control switch in the Division 1 portion of the main control room panel or by a control switch in the Division 2 portion of the main control room panel.

Two redundant SRV trip systems are provided in the two divisional cabinets. Each division feeds its respective solenoid pilot valve.

7.3.1.1.1.4.2.4 Redundancy and Diversity

The SRV logic is initiated by high reactor pressure. The initiating circuits for this variable are redundant, as explained in the circuit description of this Section. There is no diversity provided.

7.3.1.1.1.4.2.5 Actuated Devices

Refer to Section 5.2.2.4.1 for a detailed description of the nuclear safety/relief valves. Refer to Drawing 796E724 Sheet 6 of 6 for the number and location of the valves.

All relief valves are actuated by three methods:

(1) automatic action resulting from the logic chains in either Division 1 or Division 2 trip system actuating;

(2) manual action by the operator; and

(3) mechanical actuation as a result of high reactor pressure

SRV logic is a Division 1 and Division 2 system, except that only one set of relief valves is supplied. Each relief valve can be actuated by either of two solenoid pilot valves supplying air to the relief valve air piston operators. One of the solenoid pilot valves is operated by Division 1 and the other by Division 2. Logic circuitry, manual controls and instrumentation are mounted so

that Division 1 and Division 2 separation is maintained. Separation from Divisions 3 and 4 is likewise maintained.

7.3.1.1.1.4.2.6 Bypasses and Interlocks

In order to assure that no more than one relief valve reopens following a reactor isolation event, two non-automatic depressurization system (ADS) safety/relief valves are provided with lower reopening and reclosing setpoints and three safety/relief valves (two non-ADS and one ADS) with lower reclosing setpoints. On initial relief mode actuation of any safety/relief valve (SRV) these setpoints override the normal setpoints and act to hold open these valves longer, thus preventing more than a single valve from reopening subsequently. This system logic is referred to as the low-low set relief logic and functions to ensure that the containment design basis of one safety/relief valve operating on subsequent actuations is met. When reactor pressure reaches any of the normal relief setpoint levels, low-low set logic automatically seals itself into control of the five selected valves and actuates the annunciator. This logic remains sealed in until manually reset by the operator.

Once the low-low set valves have opened along with the others in their setpoint group, the low-low set logic acts to hold the low-low set valves open past their normal reclose point until the pressure decreases to a predetermined "low-low" setpoint. Thus, these valves remain open longer than the other safety/relief valves. This extended relief capacity assures that no more than one valve will reopen a second time. Also, the seal-in logic provides two of the low-low set valves with new reopening setpoints which are lower than their original SRV setpoints. These two valves provide redundancy in case of a single valve failure.

The low-low set logic is designed with the same redundancy and single failure criteria as the safety-relief logic; i.e., no single electrical failure will: (1) prevent any low-low set valve from opening, (2) cause inadvertent seal-in of low-low set logic, or (3) cause more than one valve to inadvertently open or stick open.

The five valves associated with low-low set are arranged in three independent secondary setpoint groups or ranges (low, medium, high). The "low" and "medium" pressure ranges consists of one valve each, having both "reopen" and "reclose" setpoints independently and uniquely adjustable. These are set considerably lower than their normal SRV setpoints. The remaining three valves are simultaneously controlled by the "high" range sensors which have an independently adjustable "reclose" setpoint. The normal SRV opening setpoint is retained for this valve group though reclose is extended in the low-low set operating mode.

The sensors are arranged in two trains for each division. These conform to safety relief logics "A" and "E" for Division 1 and "B" and "F" for Division 2. The single-failure criterion is maintained because 2-out-of-2 logic trains (per division) are required to open the valves and 1-out-of-2 in each division acts to reclose them. The input signals to the valve solenoids are also separated such that no single valve logic or load driver card failure within the NSPS will actuate the ADS or open a single or multiple ADS/SRV. The low range sensors which control the first valve solenoid are placed in logic E[F] and the medium range sensors which control the second valve solenoids are placed in logic A[B]. The highest pressure sensors act on three valves simultaneously. Therefore, these are also arranged in redundant 2-out-of-2 (A.E)+(B.F) logic to maintain "single Failure proof" integrity.

7.3.1.1.1.4.2.7 Testability

The SRV system has two complete logics, one in Division 1 and one in Division 2. Either one can initiate depressurization. Each logic has two trains, both of which must operate to actuate the SRV. The SRV instrument channels signals are tested by cross-comparison between the channels which bear a known relationship to each other. Indication for each instrument channel is mounted in the respective logic cabinets. The logic is tested continuously by automatic pulse testing. The Automatic Pulse Test, (APT), the sixth test, discussed in RPS Testability 7.2.1.1.4.8 is also applicable here for SRV. The instrument channel setpoints may be verified by introducing a test signal with the calibrator and to move the signal towards trip. The setpoint is verified by observing the display and the indicator light on the output of the instrument channel trip device. Testing does not interfere with automatic operation if required by an initiation signal.

For further discussion of ADS control logic testability see Subsection 7.2.1.1.4.8.

7.3.1.1.1.4.2.8 Environmental Considerations

The solenoid valves and their cables and the safety-relief valve operators are the only control and instrumentation equipment for the SRV system located inside the drywell. Equipment located outside the drywell will also operate in their normal and accident environments.

Subsection 7.5.1.4.2.4 for further discussion of suppression pool temperature monitors.

7.3.1.1.1.5 Low Pressure Core Spray (LPCS) - Instrumentation and Controls

7.3.1.1.1.5.1 System Identification

The Low Pressure Core Spray (LPCS) system will supply sufficient cooling water to the reactor vessel to adequately cool the core following a design basis loss-of-coolant accident. Significant LPCS design parameters are provided in Table 6.3-8.

7.3.1.1.1.5.2 Equipment Design

The LPCS includes one ac pump, appropriate valves, and piping to route water from the suppression pool to the reactor vessel (see Drawing M05-1073 (LPCS P&ID). Except for the testable check valve, which is inside the drywell, the transmitter and valve closing mechanisms for the LPCS system are located in the containment and auxiliary building. Cables from the sensors are routed to the analog trip modules, then to the decision logic cards and then to the output load drivers.

7.3.1.1.1.5.3 Power Sources

The LPCS pump and automatic valves are powered from the division 1 ESF ac bus that is capable of receiving standby power. Control power for the LPCS comes from ESF battery A. Control and motive power for the LPCS is from the same source as for LPCI Loop A.

7.3.1.1.1.5.4 Initiating Circuits

Reactor vessel low water level is monitored by two level transmitters that sense the difference between the pressure due to a constant reference leg of water and the pressure due to the

actual height of water in the vessel. Each level transmitter provides an input to an analog trip module located in the divisional cabinet in the main control room.

Drywell pressure is monitored by two pressure transmitters mounted on instrument racks in the containment. Instrument sensing lines that terminate in the containment allow the transmitters to communicate with the drywell interior. Each drywell pressure transmitter provides an input to an analog trip module located in the divisional cabinet in the main control room.

Two reactor vessel low water level trip units and two drywell high pressure trip units are electrically connected in a one-out-of-two twice arrangement so that no single event can prevent initiation of LPCS. (See Figure 7.3-7)

Instrument requirements such as range, accuracy, and function for the measured variables may be found in the Design Specification Data Sheets.

The LPCS initiation signal also initiates the Division I diesel generator.

7.3.1.1.1.5.5 Logic and Sequencing

The LPCS initiation logic is depicted in Figure 7.3-7 in a one-out-of-two-twice network using level and pressure trip units. The initiation signal will be generated when:

(1) Both level trip units are tripped, or

(2) both pressure trip units are tripped, or

(3) either of two other combinations of one level sensor and one pressure sensor is tripped.

Once an initiation signal is received by the LPCS control circuitry, the signal is sealed in until manually reset. The seal-in feature is shown in EO2-ILP99.

7.3.1.1.1.5.6 Bypasses and Interlocks

The LPCS pump motor and injection valve are provided with manual override controls which permits the operator manual control of the system following automatic initiation.

Two pressure transmitters are installed in the pump discharge pipeline upstream of the pump discharge check valve. This pressure signal is used in the ADS to indicate that the LPCS pump is running.

7.3.1.1.1.5.7 Redundancy and Diversity

The LPCS is actuated by reactor vessel low water level and/or drywell high pressure. Both of these conditions will result from a design basis loss-of-coolant accident. As described in Subsection 7.3.1.1.1.5.5, "Logic and Sequencing," if one low level transmitter or trip unit fails, either high drywell pressure or a combination of low level and drywell pressure transducers will initiate LPCS. If one high drywell pressure transmitter or trip unit fails either low level or a combination of low level and high drywell pressure trip units will initiate the LPCS system. LPCS is a single pump system but is backed up by LPCI A within ECCS Division 1. Two

pressure transmitters monitor the pressure between the injection valve and the testable check valve.

Division 1 system (LPCS, RHR A) and the Division 2 systems (RHR B, RHR C) are further backed-up by the Division 3 HPCS.

7.3.1.1.1.5.8 Actuated Devices

The control arrangement for the LPCS Pump is shown in drawing E02-1LP99, The LPCS pump can be controlled by a control room remote switch or by the automatic control system.

Control arrangements for the automatic valves in the LPCS system are shown in drawing E02-1LP99. Motor-operated valves are provided with limit switches to turn off the motor when the full open or close positions are reached. Torque switches are also provided to control valve motor forces when valves are closing. Thermal over-load devices are placed in service during system test, maintenance or valve repositioning during normal operation. All motor-operated valves have limit switches that provide main control room indication of valve position. Each automatic valve can be operated from the main control room.

The LPCS system pump suction valve to the suppression pool is normally open. To position the valve, a keylock switch located in main control room is used.

On receipt of a LPCS initiation signal, the LPCS test line valve is signaled to close (it is normally closed during operation) to assure that the main system pump discharge is correctly routed.

The LPCS injection valve is automatically opened upon receipt of the initiation signal when the low reactor pressure permissive is satisfied. (As discussed in Section 7.6.1.3.)

7.3.1.1.1.5.9 Separation

LPCS is a Division 1 system. In order to maintain the required separation, LPCS logic, manual controls, cabling and instrumentation are mounted so that separation from other divisions is maintained.

7.3.1.1.1.5.10 Testability

The LPCS is capable of being tested during normal operation. Pressure and low water level initiation transmitters are individually valved out of service and subjected to a test pressure. This verifies the operability of the transmitter as well as the calibration range. The instrument channel trip set point is verified by manually introducing a test signal with the calibrator and observing the channel display and the indicator light on the output of the control device (see Subsection 7.1.2.10). The logic is tested by automatic pulse testing. The Automatic Pulse Test (APT), the sixth test, discussed in RPS Testability 7.2.1.1.4.8 is also applicable here for LPCS. Other control equipment is functionally tested during manual testing of each loop. Indications in the form of panel lamps and annunciators are provided in the main control room.

For further discussion of LPCS control logic testability see Subsection 7.2.1.1.4.8.

7.3.1.1.1.5.11 Environmental Considerations

The only control component pertinent to LPCS system operation that is located inside the drywell is the control mechanism for the check valve on the LPCS injection line. This item, and all other equipment located outside the drywell, will operate in their worst-case environments as shown in the Section 3.11 tables.

7.3.1.1.1.5.12 Operational Considerations

7.3.1.1.1.5.12.1 General Information

When the LPCS is required for abnormal and accident conditions, it will be initiated automatically and no operator action will be required for at least 10 minutes. After this time, manual operation may be initiated.

7.3.1.1.1.5.12.2 Reactor Operator Information

Sufficient temperature, flow, pressure, and valve position indications are available in the control room for the operator to accurately assess LPCS system operation. Valves have indications of full open and full closed positions. The pump has indications for pump running and pump stopped. Alarm and indication devices are shown in Drawings M05-1073 (LPCS P&ID) and E02-ILP99. A leak detection system continuously confirms the integrity of the LPCS and RHR A injection lines piping to the reactor vessel. A differential pressure transmitter measures the pressure difference between the two injection lines. If the LPCS and RHR A piping is not broken/displaced, the pressure difference will be very small between these lines. If piping integrity is lost, an increase in differential pressure will initiate an alarm in the control room.

7.3.1.1.1.5.12.3 Set Points

Instrument requirements such as range, accuracy, and function for the measured variables may be found in the Design Specification Data Sheets. See the Operational Requirements Manual (ORM) for instrument setpoints.

7.3.1.1.1.6 Low Pressure Coolant Injection (LPCI) - Instrumentation and Controls

7.3.1.1.1.6.1 System Identification

Low pressure coolant injection (LPCI) is an operating mode of the residual heat removal system (RHR). The RHR system and its operating modes are discussed in Chapter 5. Because LPCI is designed to provide water to the reactor vessel following the design basis loss-of-coolant accident, the controls and instrumentation for it are discussed here. Significant LPCI design parameters are provided in Table 6.3-8.

7.3.1.1.1.6.2 Equipment Design

Drawing M05-1075 (RHR P&ID) shows the entire RHR system, including the equipment used for LPCI operation. Control and instrumentation required for the operation of the LPCI mode are essential.

The instrumentation for LPCI operation controls other valves in the RHR. This ensures that the water pumped from the suppression pool by the main system pumps is routed directly to the reactor. These interlocking features are described in this Subsection.

LPCI operation uses three pump loops, each loop with its own separate vessel injection nozzle. Drawing M05-1075 (RHR P&ID) shows the location of instruments, control equipment, and LPCI components. Except for the LPCI testable check valves, the components pertinent to LPCI operation are located outside the drywell.

Motive power for the RHR system pumps is supplied from ac buses that can receive standby ac power. Two pumps are powered from the division 2 ESF bus and the third pump from the division 1 ESF bus, which also powers the LPCS. Motive power for the automatic valves comes from the bus that powers the pumps for that loop. Control power for the LPCI components comes from the dc buses. Trip channels for LPCI B and LPCI C are shown in drawing E02-1RH99. Trip channels for LPCI A are similar to Channel B.

LPCI is arranged for automatic and remote-manual operation from the control room.

7.3.1.1.1.6.3 Initiating Circuits

LPCI A

LPCI A is initiated from the LPCS logic circuits, described in subsection 7.3.1.1.1.5.4, "Initiating Circuits."

LPCI B and C

Reactor vessel low water level is monitored by two level transmitters mounted on instrument racks in the containment that sense the difference between the pressure due to a constant reference leg of water and the pressure due to the actual height of water in the vessel. Each level transmitter provides an input to an analog trip module unit located in the control room.

Drywell pressure is monitored by two pressure transmitters mounted on instrument racks in the containment. Each drywell transmitter provides an input to an analog trip module unit located in the main control room.

The signals from level trip units and the two pressure trip units are electrically connected in a one-out-of-two-twice arrangement so that no single instrument failure event can prevent initiation of LPCI B and C. The initiation logic for LPCI B and C is shown in Figure 7.3-8.

Instrument requirements such as range, accuracy, and function for the measured variables may be found in the Design Specification Design Sheets.

The LPCI B and C initiation logic also initiates the Division II diesel/generator.

7.3.1.1.1.6.4 Logic and Sequencing

The overall LPCI operating sequence following the receipt of an initiation signal is as follows:

(1) The valves in the suction paths from the suppression pool are normally open except in shutdown cooling mode and require no automatic action to line up suction,

(2) The LPCI system pump C starts immediately, taking suction from the suppression pool. The LPCI A and B pumps start after a time delay to limit the loading of the standby power sources,

(3) Valves used in other RHR modes (except pump suction) are automatically positioned so the water pumped from the suppression pool is routed for LPCI operation,

(4) When nuclear system pressure has dropped to a value at which the LPCI system pumps are capable of injecting water into the vessel, the LPCI injection valves automatically open, and water is delivered to the reactor vessel until vessel water level is adequate to provide core cooling and the LPCI pumps are manually shut off.

LPCI A initiation logic is common to the LPCS and is separated From the initiation logic for LPCI B and LPCI C. Each initiation uses the same logic form; however, LPCI A uses only Division 1 logic, and LPCI B and LPCI C use only Division 2 logic. Each logic consists of two level instrument channels and two drywell high pressure instrument channels. After an initiation signal is received by the LPCI control circuitry, the signal is sealed in until manually reset. The seal-in feature is shown in drawing EO2-IRH99.

7.3.1.1.1.6.5 Bypasses and Interlocks

The LPCI pump motor and injection valve are provided with manual override controls which permit the operator manual control of the system following automatic initiation.

7.3.1.1.1.6.6 Redundancy and Diversity

The LPCI is actuated by reactor vessel low water level and/or drywell high pressure. Both of these conditions will result from a design basis loss-of-coolant accident and may result from lesser LOCAs. As described in 7.3.1.1.1.5.7, the LPCS "Redundancy and Diversity," if one low level transmitter or trip unit fails, either the high drywell pressure or a combination of low level and drywell pressure transmitters and trip units will initiate LPCI. Two pressure transmitters monitor pressure between the injection valve and the testable check valve.

These two divisions of low pressure emergency core cooling systems are further backed-up by the Division 3 HPCS.

7.3.1.1.1.6.7 Actuated Devices

The functional control arrangement for the LPCI system pumps is shown in drawing EO2-IRH99. Sequential loading times are provided in Table 8.3-13.

Two pressure transmitters and trip units are installed in each pump discharge pipeline to verify that pumps are operating following an initiation signal. The pressure signal is used in the automatic depressurization system to verify availability of low pressure core cooling.

All automatic valves used in the LPCI function are equipped with remote-manual test capability. The entire system can be operated from the main control room. Motor-operated valves have limit switches to turn off the motor when the full open or close positions are reached. Torque switches are also provided to control valve motor forces when valves are seating. Thermal overload devices are used to provide alarms of overload conditions and to protect motors from overload conditions by temporarily defeating the bypass during valve repositioning for routine operation, maintenance and testing. Valves that have vessel and containment isolation requirements are described in Subsection 7.3.1.1.2.

The RHR system pump suction valves from the suppression pool are normally open. To reposition the valves, a keylock switch must be turned in the main control room. On receipt of a LPCI initiation signal, certain reactor shutdown cooling system valves and the RHR test line valves are signaled to close (although they are normally closed) to assure that the RHR system pump discharge is correctly routed. If in shutdown cooling mode, operator action is required to place the system in LPCI mode.

Time delay logic similar to that used in the RHR system pump control circuitry cancels the LPCI open signal to the heat exchanger bypass valves after a 10-minute delay. The signal cancellation allows the operator to control the flow through the heat exchangers for other post-accident purposes.

7.3.1.1.1.6.8 Separation

LPCI circuits are in Division 1 (RHR A) and Division 2 (RHR B and C). In order to maintain the required separation, LPCI logic circuits manual controls, cabling and instrumentation are mounted so that Divisions 1 and 2 separation is maintained. Separation from Division 3 is likewise maintained.

7.3.1.1.1.6.9 Testability

The LPCI is capable of being tested during normal operation. Drywell pressure and low water level initiation transmitters are individually valved out of service and subjected to a test pressure. This verifies the operability of the transmitters as well as the calibration range. The instrument channel trip set point is verified by manually introducing a test signal with the calibrator and observing the channel display and the indicator light on the output of the trip device (see 7.1.2.10). The logic is tested by automatic pulse testing. The Automatic Pulse Test (APT), the sixth test, discussed in RPS Testability 7.2.1.1.4.8 is also applicable here for this LPCI function of RHR. Other control equipment is functionally tested during normal testing of each loop. Indications in the form of panel lamps and annunciators are provided in the control room.

For further discussion of LPCI control logic testability see Subsection 7.2.1.1.4.8.

7.3.1.1.1.6.10 Environmental Considerations

There are no control components pertinent to LPCI operation that are located inside the drywell. Other equipment, located outside the drywell, is selected in consideration of the normal and accident environments in which it must operate (see Table 3.11-5).

7.3.1.1.1.6.11 Operational Considerations

7.3.1.1.1.6.11.1 General Information

The pumps, valves, piping, etc., used for the LPCI are used for other modes of the RHR. Initiation of the LPCI mode is automatic and no operator action is required for at least 10 minutes. The operator may control the RHR system manually to use its capabilities in the other modes if the core is being cooled by other emergency core cooling systems.

7.3.1.1.1.6.11.2 Reactor Operator Information

Sufficient temperature, flow, pressure, and valve position indications are available in the control room for the operator to accurately assess LPCI operation. Valves have indications of full open and full closed positions. Pumps have indications for pump running and pump stopped. Alarm and indication devices are shown in Drawings M05-1075 (RHR P&ID) and E02-lRH99.

7.3.1.1.1.6.11.3 Set Points

Setpoints are discussed in the Operational Requirements Manual (ORM).

7.3.1.1.2 Containment and Reactor Vessel Isolation Control System (CRVICS) - Instrumentation and Controls

7.3.1.1.2.1 System Identification

The containment and reactor vessel isolation control system includes the sensors, channels, transmitters, and remotely activated valve closing mechanisms associated with the valves which, when closed, effect isolation of the containment or reactor vessel, or both.

The CRVICS includes all systems and portions of systems that are required for reactor vessel and containment isolation during the various modes of operation. The CRVICS consists principally of instrumentation and actuation logic associated with the following systems, which perform the process monitoring and isolation signal development functions.

a. Nuclear Boiler System

b. Nuclear Steam Supply Shutoff System

c. Process Radiation Monitoring System

d. Leak Detection System

e. Reactor Protection System

The purpose of the system is to prevent the release of radioactive materials. The power generation objective of this system is to avoid spurious closure of particular isolation valves as a

result of single failure. A specific identification of the number of instrument channels available for monitoring various parameters of CRVICS is depicted in Table 7.3-7.

7.3.1.1.2.2 System Power Sources

Power for the system logics of the isolation control system and Main steam line isolation valves supplied as shown in Figure 7.2-9 and Drawing E02-1RP99. Motor-operated isolation valves receive motive and control power from emergency buses. Power for the operation of two redundant valves in a line is supplied from separate ESF buses.

Instrument channel trip units, transmitters and logic (with the exception of Division 3 Turbine Building area high temperature logic) are powered by ac/dc power supplies (NSPS Inverters or bypass regulating transformers) whose AC power is supplied from 1A1, 1B1 and 1C1 safety buses. The Division 3 Turbine Building area temperature logic power is supplied by Division 3 120VAC bus.

The main steam line valves isolation motive power is accumulator air and spring force. Direct solenoid isolation valves in the RHR and Reactor Water Sample are isolated by spring force.

Motive and control power for the outboard and inboard motor operated isolation valves is supplied from the ESF division 1 and 2 buses, respectively.

7.3.1.1.2.3 System Equipment Design

Pipelines that penetrate the containment and drywell and directly communicate with the reactor vessel have two isolation valves, one inside the drywell and one outside the containment. These automatic isolation valves are considered essential for protection against the gross release of radioactive material in the event of a breach in the reactor coolant pressure boundary.

Power cables run in raceways from the electrical source to each motor-operated isolation valve. Solenoid valve power goes from its source to the control devices for the valve. The main steam line isolation valve controls include pneumatic piping and an accumulator for those valves which use air as the emergency motive power source in addition to springs. Pressure, flow temperature, and water level sensors are mounted on instrument racks in either the containment, auxiliary building, or the turbine building. Valve position switches are mounted on valves. Switches are encased to protect them from environmental conditions. The cables from each sensor are routed in a conduit and/or cable tray to the main control room. All signals transmitted to the main control room are electrical; no pipe from the nuclear system penetrates the main control room. The sensor cables and power supply cables are routed to cabinets in the main control room, where the system logic is located.

7.3.1.1.2.4 System Initiating Circuits

During normal plant operation, the isolation control system and trip logics that are essential to safety are energized. When abnormal conditions are sensed, the instrument channel trips, which causes the trip logic to respond and the actuators to deenergize and thereby initiate isolation.

For the main steam line and main steam line drain isolation valve control, four instrument channels are provided for each measured variable. The instrument channel trips are combined

into a two-out-of-four logic using isolation modules to assure that no single failure in one channel can prevent the safety action by disabling another channel nor can a single failure of one division logic prevent isolation from the remainder of the system (see Figure 7.3-2).

The basic logic scheme for process lines, other than the main streamlines is that the Division 1 and 4 instrument channels, monitoring an essential variable, provide inputs in a two-out-of-two logic configuration to the Division 1 trip logic. Similarly, Division 2 and 3 instrument channels provide inputs in a two-out-of-two configuration to the Division 2 trip logic. Four instrument channels for each monitored variable are provided to ensure that the protective action occurs when required and to prevent inadvertent isolation resulting from a single instrument channel malfunction. When more than one essential variable is monitored by instrument channels (i.e., level and pressure), the basic arrangement of inputs to the trip logic is one-out-of-two, twice. However, when the essential monitored variable is either high area temperature or high differential flow (i.e., RWCU system), only one instrument trip is required for isolation. The trip logic output provides input to actuation devices (i.e., load drivers, relays, pilot solenoids), which, in turn, initiate the protective function via the actuated device (i.e., isolation valve). Two independent and identical trip logics provide a separate trip logic to each redundant isolation valve in a given process line (Division 1 trip logic for the outboard valves and division 2 trip logic for the inboard valves). Whenever a trip logic has been activated, the logic latches in the trip condition even if the initiating signal clears. Direct operator action is required (via a logic reset) to manually reset the trip condition. (The initiating signal must be cleared before the logic can be reset.) The isolation valve cannot be reopened until the trip logic is reset (except for specific valves where a manual override capability has been provided. This override capability is under administrative controls. For a more detailed logic description, see Figure 7.3-2.)

The reactor water cleanup system and residual heat removal system isolation valves are each controlled by two actuator (divisions 2 and 1) circuits, one for the inboard and the outboard valves, respectively.

The control system for the automatic isolation valves is designed to provide closure of valves in time to limit the loss of coolant from the reactor and thereby limit the release of radioactive material to the environment to levels below regulatory guidelines. A secondary design function is to prevent uncovering the fuel as a result of a break in those pipelines that the valve isolates.

7.3.1.1.2.4.1 Isolation Functions and Settings

The isolation functions for all valves are listed in Table 6.2-47. Isolation trip settings of the reactor vessel isolation control system are listed in the Operational Requirements Manual (ORM). The safety design bases of these isolation signals are discussed in the following Paragraphs, and drawing E02-1NB99 illustrates how these signals initiate closure of isolation valves.

7.3.1.1.2.4.1.1 Reactor Vessel Low water Level

7.3.1.1.2.4.1.1.1 Identification

A low water level in the reactor vessel could indicate that reactor coolant is being lost through a breach in the reactor coolant pressure boundary and that the core is in danger of becoming overheated as the reactor coolant inventory diminishes.

Reactor vessel low water level initiates closure of various valves. The valves isolated are listed in the Operational Requirements Manual (ORM). The closure of these valves is intended to isolate a breach in any of the pipelines in which the valves are contained, conserve reactor coolant by closing off process lines, and limit the escape of radioactive materials from the containment through process lines that communicate with the containment interior.

Three reactor vessel low water level isolation trip settings are used to complete the isolation of the containment and the reactor vessel. The first, and highest, reactor vessel low water level isolation trip setting initiates closure of RHR valves associated with shutdown cooling and discharge to radwaste. The second reactor vessel low water level isolation trip setting initiates closure of all valves in major process pipelines except the main steam lines. The main steam lines are left open to allow the removal of heat from the reactor core. The third (and lowest) reactor vessel low water level isolation trip setting completes the isolation of the containment and reactor vessel by initiating closure of the main steam line isolation valves and drain valves.

The first low water level setting is the RPS low water scram setting. Level 3 is set high enough to indicate inadequate vessel water makeup possibly indicative of a breach in the reactor coolant pressure boundary (RCPB) or process piping containing reactor coolant yet far enough below normal operation levels to avoid spurious isolation due to expected system transients.

The second low water level setting is selected to initiate isolation at the earliest indication of a possible breach in the reactor coolant pressure boundary, yet far enough below normal operational levels to avoid spurious isolation. Isolation of the following pipelines is initiated when reactor vessel low water level fails to this first setting. The specific isolation valves are listed in Table 6.2-47.

The third (and lowest) of the reactor vessel low water level isolation settings is selected low enough to allow the removal of heat from the reactor for a predetermined time following the scram. Isolation of pipelines is initiated when the reactor vessel water level falls to this third setting. The specific valves are listed in Table 6.2-47.

Reactor vessel low water level signals are initiated from four differential pressure transmitters. They sense the difference between the pressure caused by a constant reference leg of water and the pressure caused by the actual water level in the vessel.

Four pairs of instrument sensing lines, attached to taps above and below the water level in the reactor vessel, are required for the differential pressure measurement and terminate outside the drywell and inside the containment. The pairs are physically separated from each other and tap off the reactor vessel at widely separated points at two elevations. This arrangement assures that no single failure of a sensing line can prevent isolation, if required.

7.3.1.1.2.4.1.1.2 <u>Power Supplies</u>

Power is also supplied from a 120 vac non-divisional bus. The instrument channels are supplied from 120 Vac NSPS busses "A" "B", "C", and "D" through dc logic power supplies (Divisional).

Main steam line isolation valves "A" solenoids are supplied from the 120 Vac RPS Bus "A" (Non-Divisional).

Main steam line isolation valves "B" solenoids are supplied from the 120 Vac RPS Bus "B" (Non-Divisional).

ESF power is the control power source for all MOV and solenoid-operated isolation valves. Containment and drywell isolation valve motors or pilot solenoids, as appropriate, are powered from the redundant ESF buses.

7.3.1.1.2.4.1.1.3 Initiating Circuits

Four water level sensing circuits monitor the reactor vessel water level. Each level circuit is associated with a different instrument channel. Four level transmitters are installed at separate locations in the containment and are connected by four pairs of instrument lines to separate locations on the reactor vessel. This allows the earliest practical detection of reactor vessel low water level.

7.3.1.1.2.4.1.1.4 Logic and Sequencing

When reactor vessel low water level is detected, trip signals are transmitted to the CRVICS, which initiates closure of the isolation valves, and other isolation valves necessary to isolate the containment and drywell, as described in Subsection 7.3.1.1.2.4.

There are four instrument channels provided to assure that the protective action occurs when required, but prevents inadvertent isolation resulting from instrumentation malfunctions. The output trip signals of the instrumentation channels are combined into two-out-of-four logics for MSLIVs and MSL drain valves and two-out-of-two logics for other isolation valves. Logic trips are arranged in two-out-of-two for the MSLIVs and MSL drain valves and one-out-of-two twice logics for other isolation functions.

7.3.1.1.2.4.1.1.5 Redundancy and Diversity

Redundancy of trip initiation for reactor vessel low water level is provided by four level transmitters installed at separated locations in the containment building. Each transmitter is supplied from a separate divisional power supply.

Diversity of trip initiation signals for a pipe break inside the containment is provided by reactor vessel low water and drywell high pressure. A decrease in reactor vessel water level or an increase in drywell pressure due to pipe break will initiate containment isolation.

7.3.1.1.2.4.1.1.6 Bypasses and Interlocks

Each logic division is provided with a bypass switch. This bypass is indicated in the main control room and interlocked such that only one division of sensor channel inputs can be bypassed at a time.

7.3.1.1.2.4.1.1.7 Testability

Testability is discussed in Subsections 7.3.2.2.2.3.1.9 and 7.3.2.2.2.3.1.10.

7.3.1.1.2.4.1.2 Deleted

7.3.1.1.2.4.1.3 Main Steam Line - Area High Ambient Temperature

7.3.1.1.2.4.1.3.1 Identification

High ambient temperature in the main steam line tunnel or turbine building in which the main steam lines are located outside of the primary containment could indicate a leak in a main steam line. The automatic closure of various valves prevents the excessive loss of reactor coolant and the release of a significant amount of radioactive material from the reactor coolant pressure boundary. When high temperatures occur the following pipelines are isolated:

(1) All four main steam lines,

(2) Main steam line drain.

(3) Reactor water cleanup system (Tunnel temperature only)

The instrumentation for monitoring the main steam line tunnel temperatures is described in Subsection 7.6.1.4.

The high temperature trip is set far enough above the temperature expected during operation at rated power to avoid spurious isolation, yet low enough to provide early indication of a steam line leak.

High ambient temperature in the vicinity of the main steam lines is detected by dual element thermocouples located near the main steam lines between the primary containment wall and the turbine. The ambient detectors are located or shielded so that they are sensitive to air temperature and not the radiated heat from hot equipment. Ambient detector outputs feed temperature switches (TSs). The cooling water temperature detectors are located in the supply and return lines of the main steam line tunnel area coolers. TSs provide contacts for the alarm and isolation initiation channels of CRVICS. The second element of certain dual element thermocouples is also monitored for main control room readout.

A total of four main steam line high ambient temperature channels are provided in the main steam tunnel. A total of five channels is provided for the turbine building. Each main steam line isolation logic channel is tripped by high ambient temperature in the main steam tunnel or by high ambient temperature in the turbine building.

7.3.1.1.2.4.1.3.2 Power Supplies

Power Supplies are discussed in Section 7.3.1.1.2.2.

7.3.1.1.2.4.1.3.3 Initiating Circuits

In each division one ambient temperature sensing channel monitors the main steam line tunnel area temperature, and five ambient temperature channels monitor the main steam line area temperature in the turbine building. Each ambient temperature trip channel consists of six temperature elements and six temperature switches. The ambient temperature elements are physically located near the main steam lines.

7.3.1.1.2.4.1.3.4 Logic and Sequencing

When a predetermined increase in main steam line tunnel ambient temperature is detected, trip signals are transmitted to the CRVICS. The containment and reactor vessel isolation control system initiates closure of all main steam line isolation and drain valves, and the reactor water cleanup system isolation valves. The main steam line isolation and drain valves will also receive a closure signal from the CRVICS when a predetermined increase in turbine building ambient temperature is detected.

Four instrumentation circuits (divisions) are provided for each channel to assure protective action when needed and to prevent inadvertent isolation resulting from instrumentation malfunctions.

The output trip signal of the instrument channels are combined a two-out-of-four logic. The output trip signals of the logic divisions are combined in a two-out-of-two logic. Divisions 1 and 4 or Division 2 and 3 are required to initiate main steam line and main steam line drain isolation. Thus, failure of one division does not result in inadvertent actuation.

7.3.1.1.2.4.1.3.5 Redundancy and Diversity

Redundancy of trip initiation signals for high ambient temperature is provided by multiple thermocouples installed at different locations within the main steam line tunnel and turbine building. The temperature switch (TS) associated with each thermocouple provides an input to one of four channels. Ambient TS channel A trip is supplied from 120 Vac NSPS Bus A and TS channel B is supplied from 120 vac NSPS Bus B. Ambient TS channel C is supplied from 120 vac NSPS Bus C, and TS channel D is supplied from 120 vac NSPS Bus D.

Diversity of trip initiation signals for main steam line leak is provided by main steam line tunnel ambient temperature and main steam line high flow instrumentation. An increase in ambient temperature or main steam line flow, will initiate main steam line and main steam line drain valve isolation.

7.3.1.1.2.4.1.3.6 Subsystem Bypasses and Interlocks

There are no interlocks to other systems from main steam line high area temperature trip. Keylocked bypass switches are provided which allow a bypass of the A or C isolation channel when the switch is in the bypass position. This bypass allows testing of the 120 Vac power monitor without causing an isolation to occur. The isolation channel B and D circuit arrangement allows power monitor testing without causing an isolation, therefore no bypass switches are provided for channels B and D.

7.3.1.1.2.4.1.3.7 Testability

Testability is discussed in Subsection 7.6.1.4.5.

7.3.1.1.2.4.1.4 Main Steam Line-High Flow

7.3.1.1.2.4.1.4.1 Identification

Main steam line high flow could indicate a main steam line break. Automatic closure of isolation valves prevents excessive loss of reactor coolant and release of significant amounts of radioactive material from the reactor coolant pressure boundary. On detection of main steam line high flow, the following pipelines are isolated:

(1) All four main steam lines,

(2) Main steam line drain.

The main steam line high flow trip setting is high enough to permit isolation of the one main steam line for test at rated power without causing an automatic isolation of the other steam lines, yet low enough to permit early detection of a steam line break.

High flow in each main steam line is sensed by four differential pressure transmitters that sense the pressure difference across a single flow element in each line.

7.3.1.1.2.4.1.4.2 Power Supplies

Power supplies are discussed in Section 7.3.1.1.2.2.

7.3.1.1.2.4.1.4.3 Subsystem Initiating Circuits

Sixteen differential pressure transmitters, four for each main steam line, monitor the main steam line flow. Each differential pressure channel on a single main steam line is associated with a different electrical division. Four differential pressure transmitters are installed to sense flow in each main steam line and allow the earliest possible detection of a main steam line leak.

7.3.1.1.2.4.1.4.4 Logic and Sequencing

When excessive main steam line flow is detected, trip signals are transmitted to CRVICS. The containment and reactor vessel isolation control system initiates closure of all main steam line isolation and drain valves.

Four instrumentation logic divisions are provided to assure protective action when required and to prevent inadvertent isolation resulting from instrumentation malfunctions. The output trip signals of the instrumentation channels are combined into two-out-of-four logics. The output trip signals of the logic divisions are combined in two-out-of-two logics for the main steam line drain valves and in a two-out-of-two logic for the MSIV's. Failure of any one division does not result in inadvertent actuation.

7.3.1.1.2.4 1.4.5 Redundancy and Diversity

Redundancy of trip initiation signals for high flow is provided by four differential pressure transmitters connected to each main steam line. Each differential pressure transmitter on a single steam line is associated with a different electrical division.

Diversity of trip initiation signals is described in Subsection 7.3.1.1.2.4.1.3.5.

7.3.1.1.2.4.1.4.6 Subsystem Bypasses and Interlocks

Each logic division is provided with a bypass switch. This bypass is indicated in the main control room and interlocked such that only one division of sensor channel inputs can be bypassed at a time.

There are no interlocks to other systems from main steam line high flow trip signals.

7.3.1,1.2.4.1.4.7 Subsystem Testability

Testability is discussed in Subsections 7.3.2.2.2.3.1.9 and 7.3.2.2.2.3.1.10.

7.3.1.1.2.4.1.5 Main Turbine Inlet - Low Steam Pressure

7.3.1.1.2.4.1.5.1 Identification

Low steam pressure at the turbine inlet while the reactor is operating could indicate a malfunction of the nuclear system pressure controller in which the turbine control valves or turbine bypass valves become fully open, and cause rapid depressurization of the nuclear system. Such depressurization could cause damage to vessel internals, and a thorough vessel inspection or core inspection might be required prior to returning the reactor to power operation. To avoid the time consuming consequences of a rapid depressurization, the steam pressure at the turbine inlet is monitored. Pressure falling below a preselected value with the reactor in the RUN mode initiates isolation of the following pipelines:

(1) All four main steam lines,

(2) Main steam drain line.

The low steam pressure isolation setting was selected far enough below normal turbine inlet pressures to avoid spurious isolation, yet high enough to provide timely detection of a pressure controller malfunction. Although this isolation function is not required to satisfy any of the safety design bases for this system, the discussion is included to complete the listing of isolation functions.

Main steam line low pressure is monitored by four pressure transmitters that sense pressure downstream of the outboard main steam line isolation valves. The sensing point is located as close as possible to the turbine stop valves.

7.3.1.1.2.4.1.5.2 Power Supplies

Subsystem power supplies are as described in Section 7.3.1.1.2.2.

7.3.1.1.2.4.1.5.3 Initiating Circuits

Four pressure transmitters monitor main steam line manifold pressure. Each pressure transmitter is associated with a different logic. The locations of the pressure transmitters provide the earliest practical detection of low main steam line pressure.

7.3.1.1.2.4.1.5.4 Logic and Sequencing

When a predetermined value of main steam line pressure is detected, trip signals are transmitted to the CRVICS. The containment and reactor vessel isolation control system initiates closure of all main steam line isolation valves and drain valves.

Four instrumentation channels are provided to assure protective action when required and to prevent inadvertent isolation resulting from instrumentation malfunctions. The output trip signals of each of the instrumentation channels are combined into two-out-of-four logics. The output trip signals of the logic divisions are combined in two-out-of-two logics for main steam line drain and two-out-of-two twice for the MSIV's. Failure of any one division does not result in inadvertent actuation.

7.3.1.1.2.4.1.5.5 Redundancy and Diversity

Redundancy of trip initiation signals for low pressure is provided by four pressure transmitters which measure main steamline manifold pressure. Each pressure transmitter is associated with one of four instrument channels.

7.3.1.1.2.4.1.5.6 Bypasses and Interlocks

The main steam line low pressure trip is bypassed by the reactor mode switch in the Shutdown, Refuel, and Startup modes of reactor operation. In the RUN mode, the low pressure trip function is operative.

In addition, each logic division is provided with a bypass switch. This bypass is indicated in the main control room and interlocked such that only one division of sensor channel inputs can be bypassed at a time.

There are no interlocks to other systems from main steam line low pressure trip signals.

7.3.1.1.2.4.1.5.7 Testability

Testability is discussed in Sections 7.3.2.2.2.3.1.9 and 7.3.2.2.2.3.1.10.

7.3.1.1.2.4.1.6 Drywell High Pressure

7.3.1.1.2.4.1.6.1 Identification

High pressure in the drywell could indicate a breach of the reactor coolant pressure boundary inside the drywell. The automatic closure of various valves prevents the release of significant amounts of radioactive material from the containment. The pipelines which are isolated on detection of high drywell pressure are listed in Table 6.2-47.

The drywell high pressure isolation setting was selected to be as low as possible without inducing spurious isolation trips.

Drywell pressure is monitored by multiple pressure transmitters that are mounted on instrument racks in the containment and connected to the drywell through instrument lines.

7.3.1.1.2.4.1.6.2 Subsystem Power Supplies

Subsystem power supplies are as discussed in Section 7.3.1.1.2.2.

7.3.1.1.2.4.1.6.3 Initiating Circuits

Four pressure sensors monitor drywell pressure. One pressure sensor is associated with each instrument channel. Four pressure transmitters are installed at different locations outside the drywell which provide inputs to analog trip modules and provide the earliest practical detection of a line break inside the drywell.

7.3.1.1.2.4.1.6.4 Logic and Sequencing

When a significant increase in drywell pressure is detected, trip signals are transmitted to the CRVICS. The containment and reactor vessel isolation control system initiates closure of selected isolation valves.

Four instrument channels are provided to assure protective action when required and to prevent inadvertent isolation resulting from instrumentation malfunctions. The output trip signals of the instrument channels are combined into two-out-of-two logic. Division logic 2 and 3 or Division logic 1 and 4 are required to initiate closure of inboard or outboard valves, respectively. Thus, failure of any one logic channel does not result in inadvertent actuation.

7.3.1.1.2.4.1.6.5 Redundancy and Diversity

Redundancy of trip initiation signals for drywell high pressure is provided by four redundant pressure transmitters installed at different locations around the drywell. Each transmitter is associated with one of four instrument channels.

Diversity of trip initiation signals for line breaks inside of the drywell is provided by drywell high pressure and reactor low water level. An increase in drywell pressure or a decrease in reactor water level will initiate containment isolation.

7.3.1.1.2.4.1.6.6 Bypasses and Interlocks

Bypasses are discussed in Section 7.2.

There are no interlocks for drywell high pressure trip signals.

7.3.1.1.2.4.1.6.7 Testability

Testability is discussed in Subsections 7.3.2.2.2.3.1.9 and 7.3.2.2.2.3.1.10.

7.3.1.1.2.4.1.7 Not Used

7.3.1.1.2.4.1.8 Not Used

7.3.1.1.2.4.1.9 Reactor Water Cleanup (RWCU) System-High Differential Flow

7.3.1.1.2.4.1.9.1 Identification

High differential flow in the reactor water cleanup system could indicate a breach of the pressure boundary in the RWCU system. The RWCU system flow at the inlet to the system (suction from reactor recirculation lines) is compared with the sum of the flows at the outlets of the system (return to feedwater and flow to the Main Condenser). High differential flow initiates isolation of the RWCU system.

7.3.1.1.2.4.1.9.2 Power Supplies

Trip logic channels for outboard and inboard valves are supplied from NSPS 120 Vac Bus A and B, respectively.

7.3.1.1.2.4.1.9.3 Initiating Circuits

Six differential pressure instruments monitor the reactor water cleanup system flow. Two monitor RWCU pump-suction flow from the recirculation lines, two monitor the flow to the feedwater system, and two monitor the flow to the main condenser. One of each of the redundant sets of flow monitoring instruments is associated with one instrument channel. The second set of flow monitoring instruments is associated with the other instrument channel. The locations of the flow elements on the respective pipelines provide the detection of reactor water cleanup system line breaks.

7.3.1.1.2.4.1.9.4 Logic and Sequencing

When a predetermined increase in reactor water cleanup system differential flow is detected, trip signals are transmitted to the CRVICS. The containment and reactor vessel isolation control system initiates closure of all reactor water cleanup system isolation valves.

Two instrumentation trip channels are provided to assure protective action, when required. The output trip signal of each instrumentation channel initiates one logic channel trip. The Division 1 logic signal closes the outboard RWCU isolation valve and the Division 2 logic signal closes the inboard RWCU valve.

7.3.1.1.2.4.1.9.5 Redundancy and Diversity

Redundancy of trip initiation signals for high differential flow is provided by two sets of differential flow monitors. Each differential flow monitor is supplied from the appropriate logic channel power source.

Diversity of trip initiation signals for reactor water cleanup system line break is provided by instrumentation for reactor water level or equipment area ambient temperature. A decrease in reactor vessel water levels, or an increase in ambient temperature or differential temperature will initiate reactor water cleanup system isolation.

7.3.1.1.2.4.1.9.6 Bypasses and Interlocks

Reactor water cleanup system high differential flow trip is bypassed by an automatic timing circuit during normal reactor water cleanup system surges. This time delay bypass prevents inadvertent system isolation during system operational changes.

The RWCU System high differential flow trip can be bypassed for instrument channel maintenance, testing, or calibration.

The RWCU system high differential flow trip can also be bypassed when necessary to prevent inadvertent system isolations of the RWCU system. This may result from system surges anticipated to last longer than the time delay bypass which may occur during RWCU system operational mode changes or when operating in the blowdown mode. Bypassing of both divisions 1 and 2 of RWCU Leak Detection for the purpose of preventing high differential flow trips for this purpose is limited to reactor coolant conditions when the reactor coolant Iodine 131 dose equivalent activity is less than or equal to 1.8×10^{-3} micro curies per gram, and is further limited to the requirements of the Technical Specifications for the differential flow instrumentation.

There are no interlocks to other systems provided from the reactor water cleanup system high differential flow trip signals.

The RWCU inlet flow signal interlocks the RWCU pumps to stop the pumps when flow is below a predetermined value.

7.3.1.1.2.4.1.9.7 Testability

Testability is discussed in Subsection 7.3.2.2.2.3.1.10.

7.3.1.1.2.4.1.10 Reactor Water Cleanup (RWCU) System-Area High Temperature

7.3.1.1.2.4.1.10.1 Identification

High temperature in the equipment room areas of the reactor water cleanup system or main steamline tunnel could indicate a breach in the pressure boundary in the cleanup system. High ambient temperature in the equipment areas or in the main steamline tunnel initiates isolation of the reactor water cleanup system.

7.3.1.1.2.4.1.10.2 Subsystem Power Supplies

Trip logic channels for the outboard and inboard valves are supplied from NSPS 120 Vac Bus A and B, respectively.

7.3.1.1.2.4.1.10.3 Subsystem Initiating Circuits

Ten ambient temperature instrument channels monitor the reactor water cleanup system area temperatures. Five area temperature switches are associated with each logic channel. Two ambient temperature elements are located in each of the following locations: Pump Room 1, Pump Room 2, Pump Room 3, Heat Exchanger Room East, Heat Exchanger Room West. The locations of the temperature elements provide the earliest practical detection of any hot reactor water cleanup system line break.

Additionally, one ambient temperature monitoring circuit in each of two divisions monitoring main steam line tunnel temperature will cause an isolation of the RWCU System inboard or outboard isolation valves. These monitors are the same units which effect isolation of the main steam lines.

7.3.1.1.2.4.1.10.4 Logic and Sequencing

When a predetermined value of reactor water cleanup system area ambient temperature is detected, trip signals initiate closure of all RWCU system isolation valves.

Two independent instrument channels are provided. The output trip signal of each instrument channel initiates a channel logic trip and closure of either the inboard or outboard reactor water cleanup system isolation valves. Protection against inadvertent isolation due to instrumentation malfunction is not required or provided.

7.3.1.1.2.4.1.10.5 Redundancy and Diversity

Redundancy of trip initiation signal's for high ambient temperature is provided by two ambient temperature elements installed in each reactor water cleanup system area with each associated with a different channel logic.

Diversity is discussed in Subsection 7.3.1.1.2.4.1.9.5.

7.3.1.1.2.4.1.10.6 Bypasses and Interlocks

Reactor water cleanup system high ambient temperature trips can be bypassed during instrument channel testing, by two keylocked bypass switches.

There are no interlocks to other systems from the reactor water cleanup system high ambient temperature trip signals.

7.3.1.1.2.4.1.10.7 Testability

Testability is discussed in Subsection 7.3.2 2.2.3.1.10.

7.3.1.1.2.4.1.11 RHR System-Area High Temperature

7.3.1.1.2.4.1.11.1 Identification

High temperature in the area of the RHR system pumps could indicate a breach in the nuclear process barrier in the RHR system. High equipment area ambient temperature in the area ventilation initiate isolation of the RHR shutdown cooling system, sample valves and drainage valves to the radwaste system.

High temperature in the areas occupied by the RHR system piping outside the drywell is sensed by temperature elements that indicate possible pipe breaks.

Temperature sensors in the equipment area and the inlet and outlet ventilation ducts of the RHR equipment areas will, when a high temperature is detected, cause isolation.

The second element of the Division 1 dual element thermo-couples is monitored on a recorder in the main control room.

7.3.1.1.2.4.1.11.2 Power Supplies

Subsystem power supplies are as discussed in Subsection 7.3.1.1.2.4.1.9.2.

7.3.1.1.2.4.1.11.3 Initiating Circuits

Four ambient temperature instrument channels monitor the RHR system areas temperature. Two ambient temperature channels are associated with the same logic channel. The remaining temperature channels are associated with a different logic channel. The ambient temperature elements are located in each RHR equipment area. Two pairs of temperature elements are located in the ventilation supply and ventilation exhaust of each RHR equipment area. The locations of the temperature elements provides the earliest practical detection of any RHR system line break.

7.3.1.1.2.4.1.11.4 Subsystem Logic and Sequencing

When a predetermined RHR area ambient temperature is detected, trip signals initiate closure of the RHR system isolation valves.

Two instrumentation channels are provided to assure protective action, when required. The output trip signal of each instrument channel initiates a channel logic trip and closure of either the inboard or outboard RHR system isolation valves. To close both the inboard and outboard isolation valves, both division logics must trip. Protection against inadvertent isolation due to instrumentation malfunction is not required or provided.

7.3.1.1.2.4.1.11.5 Subsystem Redundancy and Diversity

Redundancy of trip initiation signals for high ambient temperature is provided by two ambient temperature elements installed in each RHR equipment area. These are connected to different channel logics. Each redundant temperature switch is supplied from a different power source.

Diversity of trip initiation signals for RHR line break is provided by ambient temperature instruments. An increase in ambient temperature will initiate RHR shutdown cooling isolation.

7.3.1.1.2.4.1.11.6 Subsystem Bypasses and Interlocks

A bypass/test keyswitch is provided in each logic channel for the purpose of testing the temperature monitor without initiating RHR system isolation. Placing the keyswitch in bypass position in one logic channel will not prevent operation of the temperature monitors in the opposite logic channel from initiating RHR system isolation.

7.3.1.1.2.4.1.11.7 Testability

Testability is discussed in Subsection 7.3.2.2.2.3.1.10.

7.3.1.1.2.3.1.12 Not Used

7.3.1.1.2.4.1.13 Not Used

7.3.1.1.2.4.1.14 Main Condenser Vacuum Trip

7.3.1.1.2.4.1.14.1 Identification

In addition to the turbine stop valve trip on low condenser vacuum, which is a standard component of turbine system instrumentation, a main steamline isolation valve trip from the low condenser vacuum instrumentation system is provided.

A main turbine condenser low vacuum signal could indicate a leak in the condenser or low cooling water flow or both. Initiation of automatic closure of isolation valves will prevent excessive loss of reactor coolant and the possible release of significant amounts of radioactive material from the nuclear system process barrier. Upon detection of turbine condenser low vacuum, the following lines will be isolated:

(1) All four main steamlines,

(2) Main steamline drain.

There are four independent main condenser vacuum transmitters for the purpose of providing an isolation signal to the main steam isolation valves. Each vacuum transmitter has its own isolation valve, separate sensing line connected to the condenser and pressurizing source connection for testing. The wiring and separation requirements for these sensors are in accordance with IEEE-279. The vacuum trip setting is selected so that it is compatible with safe turbine and main condenser operation at design conditions, thereby minimizing the probability of turbine or condenser damage with subsequent loss of reactor coolant and release of radioactive material.

7.3.1.1.2.4.1.14.2 Power Supplies

Subsystem power supplies are as discussed in Section 7.3.1.1.2.2.

7.3.1.1.2.4.1.14.3 Initiating Circuits

Four pressure sensing instrument channels monitor main condenser vacuum. Each instrument channel is associated with a different channel logic. The four pressure transmitters sense pressure in the condenser which provides the earliest practical detection of a main condenser overpressure condition. Each transmitter provides an input to an analog trip unit which provides the trip signal.

7.3.1.1.2.4.1.14.4 Logic and Sequencing

When a predetermined value of main condenser vacuum is detected, trip signals initiate closure of all main steam line isolation and drain valves.

Four instrument channels are provided to assure protective action, when required, and to prevent inadvertent isolation resulting from instrumentation malfunction.

The output trip signals of the instrumentation channels are combined into two-out-of-four logics. The output trip signals of the division logics are combined in two-out-of-two logics for the main steam line drains and two-out-of-two twice logic for the MSIV's. Failure of any one instrument channel does not result in inadvertent isolating action.

7.3.1.1.2.4.1.14.5 Redundancy and Diversity

Redundancy of trip initiation signals for low vacuum is provided by four pressure transmitters. Each pressure transmitter is connected to one of four instrument channels.

7.3.1.1.2.4.1.14.6 Bypasses and Interlocks

Main condenser low vacuum-trip can be bypassed manually for system startup.

Each logic division is provided with a bypass switch This bypass is indicated in the main control room and is interlocked such that only one division of sensor channel inputs can be bypassed at a time.

There are no interlocks to other systems for main condenser low vacuum trip signals.

7.3.1.1.2.4.1.14.7 Testability

Testability is discussed in Subsection 7.3.2.2.2.3.1.10.

7.3.1.1.2.4.1.15 Manual Isolation (System Level)

7.3.1.1.2.4.1.15.1 Identification

The CRVICS has four divisionally separated armed pushbuttons for system level manual initiation of isolation. When an armed pushbutton is depressed the corresponding logic will be de-energized causing a logic trip.

7.3.1.1.2.4.1.15.2 Power Sources

The manual isolation circuits are powered from four NSPS divisional power supplies.

7.3.1.1.2.4.1.15.3 Initiating Circuits

The four armed pushbuttons are located at the main control room panel. When depressed they initiate isolation functions for a11 the system listed in subsection 7.3.1.1.2.1.

7.3.1.1.2.4.1.15.4 Logic and Sequencing

When the four armed pushbuttons are depressed isolation is initiated.

Two of the four pushbuttons will initiate outboard isolation and the remaining two the inboard isolation.

The output trip signals of each pushbutton are combined in two-out-of-two logic.

7.3.1.1.2.4.1.15.5 Bypasses and Interlocks

No operational bypasses or interlocks are provided with this subsystem.

7.3.1.1.2.4.1.15.6 Redundancy and Diversity

The number of armed pushbuttons provide the required redundancy. The failure of a single component will not prevent a manual protective action. In addition, a single failure will not initiate an isolation function due to the use of independent push buttons and logics. Diversity is provided for manual isolation by individual valve control switches.

7.3.1.1.2.4.1.15.7 Testability

The operability of each armed pushbutton can be tested during power operation by depressing only one pushbutton at a time.

7.3.1.1.2.4.1.15.8 Environmental Considerations

The manual isolation function is designed and has been qualified to meet the environmental considerations indicated in Section 3.11. In addition it has been seismically qualified as described in Section 3.10.

7.1.1.2.4.1.15.9 Operational Considerations

Manual Isolation is a back-up to the automatic isolation initiation logic.

7.3.1.1.2.4.2 System Instrumentation

Sensors providing inputs to the containment and reactor vessel isolation control system are not used for the automatic control of the process system, thereby achieving separation of the protection and process systems. Channels are physically and electrically separated to reduce the probability that a single physical event will prevent isolation. Redundant channels for one monitored variable provide inputs to the division logics through isolation devices. The functions of the sensors in the isolation control system are shown in Figures 7.3-2 and 7.3-3. Table 7.3-7 lists instrument characteristics.

7.3.1.1.2.5 System Logic

The basic logic arrangement is one in which a particular automatic isolation valve is controlled by either one or two division trip and actuator logics. A division trip logic for a particular valve receives input signals from either one, two or four sensing channels depending on the monitored variable. At least four trip channel inputs to the division trip logic for each essential monitored variable are required to provide outputs to the trip actuator logics for each MSIV and each main steam line drain isolation valve. All other valves require two sensing channel inputs unless the essential monitored variable is one of the following; high area temperature, high flow, reactor low water level or reactor high pressure. For these variables only one sensing channel input is required for each trip channel.

To initiate valve closure, the trip actuator logics of two divisions must be tripped for each MSIV or each main steam line drain isolation valve and one division for each of the other valves.

Two-out-of-four channel logic and two-out-of-two trip logic is used to control each MSIV and each main steam line drain isolation valve and either two-out-of-two or one-out-of-one logic to control the other valves. The logic strings for this control are shown in drawing E02-1NB99. The variables that initiate automatic closure of the MSIV and main steam line drain isolation valves are:

(1) low reactor water level,

(2) deleted,

(3) high main steam line flow,

(4) high main steam line tunnel temperature,

(5) low steam line pressure,

(6) main condenser low vacuum,

(7) turbine building high temperature.

Drywell and containment isolation valves are controlled by drywell pressure and reactor low water level signals. In this arrangement, two drywell pressure sensors are combined with two water level sensors. This trip logic could be termed two-out-of-two and the trip actuator logic one-out-of-one for each signal applied to each valve. These same drywell pressure and water level logics are used for initiation of the standby gas treatment system.

The reactor water sample valves are controlled by reactor low water level signals. This trip logic is one-out-of-two applied to each valve.

The RHR isolation valves are controlled by reactor high pressure, high area temperature, and reactor low water level. The reactor low water level trip could be termed two-out-of-two and the trip actuator logic one-out-of-one for each signal applied to each valve. Reactor high pressure trip logic is two-out-of-two for each signal applied to each valve.

The reactor water cleanup isolation valves are controller by two division logics, using high flow, high area temperature, area differential temperature, low water level signals, and standby liquid control system operation. One division logic in this form is applied to each valve.

The isolation variables are listed in Table 6.2-47.

7.3.1.1.2.6 System Sequencing

A discussion of all sequencing of all subsystems of the CRVICS is provided in Subsection 7.3.1.1.2.4.

7.3.1.1.2.7 System Bypasses and Interlocks

System bypasses and interlocks are discussed for each subsystem of the isolation system in Subsection 7.3.1.1.2.4.1.

7.3.1.1.2.8 System Redundancy and Diversity

The variables which initiate isolation are listed in the circuit description, Subsection 7.3.1.1.2.4.1. Also listed there are the number of initiating sensors and channels for the isolation valves.

7.3.1.1.2.9 System Actuated Devices

The main steam line isolation valves are spring and pneumatic closing, piston-operated valves. They close by spring power on loss of pneumatic pressure to the valve operator. This is fail-safe design. The control arrangement is shown in drawing E02-1NB99. Closure time for the valves is adjustable between 3 and 10 seconds, but the valve closure is set to be within 3 to 5 seconds. Referring to Figure 7.3-4, there is a piston in hydraulic cylinder which is linked to the valve poppet. The hydraulic fluid is in an enclosed system which allows it to move from beneath the piston through a manually controlled orifice (speed control valve 6) to above the piston. The orifice is set during testing prior to plant operation. The valve closure time is rechecked in accordance with procedures following any work performed on the valve. A socket setscrew locks the set position following the closure time set adjustments. Each valve is piloted by two ac operated actuators. An accumulator located close to each isolation valve provides pneumatic pressure for valve closing in the event of failure of the normal air supply system.

For containment isolation, motor-operated and solenoid operated valves are the actuated devices. Motor operated valves motive and control power is from essential ESF power. Direct solenoid valves are energized open and close on isolation by spring power. Control power is supplied by essential ESF power.

To limit radiological release and to reduce the loss of reactor coolant as a result of pipe line break, the valve closing mechanisms are designed to meet the minimum closing rates specified in Table 6.2-47.

7.3.1.1.2.10 System Separation

Sensor devices are separated physically such that no single failure can prevent the safety action. By the use of conduit and separated cable trays, the same criterion is met from the sensors to the logic cabinets. The logic cabinets are so arranged that redundant equipment and wiring are not present in the same cabinet. Redundant equipment and wiring may be present in control room bench boards and logic output cabinets where separation is achieved by a six inch air space or surrounding redundant wire and equipment in metal encasements. From comparator input cabinets to the logic output cabinets and from the logic cabinets to the isolation valves, separated cable or conduit are employed to complete adherence to the separation criterion.

A brief description of Power Generation and Control Complex (PGCC) considerations and the relation of PGCC to system separation is given in Subsection 7.2.1.1.9. Detailed design basis, description, and safety evaluation aspects for a PGCC system are comprehensively documented and presented in GE Topical Report, "Power Generation Control Complex," NEDO-10466-A and its amendments.

7.3.1.1.2.11 System Testability

The main steam line and main steam line drain isolation valve instrumentation is capable of complete testing during power operation. The isolation signals include low reactor water level, high main steam line flow, high main steam line tunnel temperature, low condenser vacuum, high turbine building temperature, and low turbine pressure. The water level, turbine pressure and steam line flow sensors are pressure or differential pressure type sensors which may be valved out of service one at a time and functionally tested using a test pressure source. The radiation measuring amplifier is provided with a test switch and internal test voltage source by which operability may be verified. Functional operability of the temperature switches may be verified by applying a heat source to the locally mounted temperature sensing elements.

Control room indications include annunciation, indicating lights and computer printout. The condition of each sensor is indicated by at least one of these methods in addition to annunciators common to sensors of one variable. In addition, the functional availability of each isolation valve may be confirmed by completely or partially closing each valve individually at reduced power using test switches located in the main control room. Valve indicator lights in the control room provide indication of isolation valve position.

The cleanup system isolation signals include low reactor water level, equipment area high ambient temperature, high differential flow, high temperature downstream of the non-regenerative heat exchanger, and standby liquid control system actuation. The water level and flow sensors are of the differential pressure type and can be periodically tested by valving each sensor out of service and applying a test pressure. The temperature switches may be functionally tested by removing them from service and applying a heat source to the temperature sensing elements. The differential flow instrument channels may be tested by applying a test input. The various trip actuations are annunciated in the main control room. Also, valve indicator lights in the main control room provide indication of cleanup isolation valve position.

The drywell and containment isolation signals include low reactor water level, and high drywell pressure. The water level sensor is of the differential pressure type and can be periodically tested by valving each sensor out of service and applying a test pressure. The drywell pressure sensor can be periodically tested in the same manner. The various trip actuations are annunciated in the main control room. Also, valve indicator lights in the main control room provide indication of cleanup isolation valve position.

The reactor water sample isolation signal is low reactor water level. Testability is discussed under main steam line and main steam line drain testability.

The RHR system isolation signals include low reactor water level, equipment area high ambient temperature and high reactor pressure. The water level sensors are of the differential pressure type and can be periodically tested by valving each sensor out of service and applying a test pressure. The reactor pressure sensor can be periodically tested in the same manner. The temperature switches may be functionally tested by removing them from service and applying a heat source to the temperature sensing elements. The various trip actuations are annunciated in the main control room. Also, valve indicator lights in the main control room provide indication of cleanup isolation valve position.

The instrument channel operability is checked by cross comparison between channels, the trip setpoint is verified by manually introducing a test signal and observing the channel meter and

the indicator light on the output of the trip device. For a description of logic testing, see Subsection 7.2.1.1.4.8, "Testability".

7.3.1.1.2.12 System Environmental Considerations

The physical and electrical arrangement of the Containment and Reactor Vessel Isolation Control System was selected so that no single physical event will prevent achievement of isolation functions. Temperature, pressure, humidity, and radiation are considered in the selection of equipment for the system. Cables used in high radiation areas have radiation-resistant insulation. Shielded cables are used where necessary to eliminate interference from magnetic fields.

Special consideration has been given to isolation requirements during a loss-of-coolant accident inside the drywell. Components of the Containment and Reactor Vessel Isolation Control System that are located inside the drywell and that must operate during a loss-of-coolant accident are the cables, control mechanisms, and valve operators of isolation valves inside the drywell. These isolation components are required to be functional in a loss-of-coolant accident environment. (See Section 3.11.5). Electrical cables are selected with insulation designed for this service. Closing mechanisms and valve operators are considered satisfactory for use in the isolation control system only after completion of environmental testing under loss-of-coolant accident conditions or submission of evidence from the manufacturer describing the results of suitable prior tests.

7.3.1.1.2.13 System Operational Considerations

Isolation input variables are indicated on meters in the trip units of the main control room. (See Paragraph 7.3.1.1.2.1 for the isolation initiating signals.) Recorders show reactor vessel pressure and water level. Also provided is the wide range water level indicator. Isolation system and valve status are shown by indicator lights and logged into the display control system.

7.3.1.1.2.13.1 General Information

The containment and reactor vessel isolation control system is not required for normal operation. This system is initiated automatically when one of the monitored variables exceeds preset limits. No operator action is required for at least 10 minutes following initiation.

All automatic isolation valves can be closed by manual operation of switches in the main control room, thus providing the reactor operator with control which is independent of the automatic isolation functions.

7.3.1.1.2.13.2 Reactor Operator Information

Once isolation is initiated, the valve continues to close even if the condition that caused isolation is restored to normal. The reactor operator must manually reset the tripped logic and operate switches in the main control room to reopen a valve that has been automatically closed. Unless a manual bypass under administrative control is provided, the operator cannot reopen the valve until the conditions that initiated isolation have cleared.

A trip of an isolation control system channel is annunciated in the main control room so that the reactor operator is immediately informed of the condition. The response of isolation valves is indicated by OPEN-CLOSED indicator lights.

Inputs to annunciators, control systems, and the process computer are isolated electrically and physically from safety circuits so that no malfunction of the annunciating, or computing equipment or control systems can functionally disable the system. Direct signals from the isolation system sensors are not used as inputs to annunciating or data logging equipment. Isolation is provided between the primary signal and the information output.

7.3.1.1.2.13.3 SetPoints

Refer to the Operational Requirements Manual for the safety setpoint information.

7.3.1.1.3 MSIV - LCS Instrumentation and Controls

Note: As a result of the re-analysis of the Loss of Coolant Accident (LOCA) using Alternative Source Term (AST) Methodology, it is no longer necessary to credit the Main Steam Isolation Valve Leakage Control System (MSIVLCS) for post-LOCA activity leakage mitigation. The system has been left in place as a passive system and is not required to perform any safety function.

This page left blank intentionally

7.3.1.1.4 RHR/Containment Spray Cooling Mode - Instrumentation and Controls

7.3.1.1.4.1 System Identification

Containment spray cooling is an operating mode of the Residual Heat Removal System. It is designed to provide the capability of condensing steam in the suppression pool air volume and/or the containment atmosphere and cooling non-condensibles therein. The mode is automatically or manually initiated when necessary.

The RHR system is shown in P&ID M05-1075.

7.3.1.1.4.2 Power Sources

Power for the RHR system pumps is supplied from two ac buses that can receive standby ac power. Motive and control power for the two loops of containment spray cooling instrumentation and control equipment are the same as that used for LPCI A and LPCI B; see Subsection 7.3.1.1.1.6.

7.3.1.1.4.3 Equipment Design

Control and instrumentation for the following equipment is required for this mode of operation:

(1) Two RHR main system pumps.

(2) Pump suction valves.

(3) Containment spray cooling discharge valves.

Variables needed for automatic operation of the equipment are low reactor water level, and/or high drywell pressure and high containment pressure.

The instrumentation for containment spray cooling operation assures that water will be routed automatically from the suppression pool to the containment air volume.

Containment spray cooling operation uses two pump loops, each loop with its own separate discharge valve. All components pertinent to containment spray cooling operation are located outside of the drywell.

Motive and control power for the two loops of containment spray cooling instrumentation and control equipment are the same as that used for RHR A and RHR B.

The containment spray cooling system can be manually initiated from the main control room if drywell pressure is above the high set point.

7.3.1.1.4.4 Initiating Circuits

7.3.1.1.4.4.1 Containment Spray A

Containment and drywell pressure is monitored by two absolute pressure transmitters mounted in instrument racks in the containment. Cables from these transmitters are routed to the main control room logic cabinets. The two containment pressure and the two drywell pressure transmitters and trip units are electrically connected so that no single sensor failure can prevent initiation of containment spray A.

The above sensors in combination with a ten minute time delay logic initiated by a loss-of-coolant accident (reactor low water level and/or high drywell pressure) provide the automatic initiating signal for containment spray A. This signal is sealed in and must be manually reset.

A timer reset switch is utilized in the containment spray cooling auto-initiation logic to delay (10 minutes) automatic initiation of the spray. This additional time period will allow operator assessment of the pending action. The operator may use this feature to further delay automatic initiation of the containment spray cooling if such a delay is prudent. If the operator allows the time delay to expire and the LOCA and containment high pressure signals are still present, the containment spray cooling will be initiated. In the event that the operator deems the containment spray cooling necessary after resetting the timer, he may initiate the sprays manually.

7.3.1.1.4.4.2 Containment Spray B

Initiation of containment spray B is identical to that of 'A' except that an additional time delay of 90 seconds is added which precludes simultaneous starting of both loops.

7.3.1.1.4.5 Logic and Sequencing

The operating sequence of containment spray cooling following receipt of the necessary initiating signals is as follows:

(1) The RHR system is in the injection mode (LPCI).

(2) Valves in other RHR modes are automatically positioned or remain as positioned during LPCI.

(3) Shutdown service water supply and discharge valves to the RHR heat exchanger are signaled to open. The shutdown service water (tube) side heat exchanger bypass valves are manually operated and locked closed.

(4) If the RHR (shell) side heat exchanger inlet and outlet valves are both fully open, the heat exchanger bypass valve on the RHR side is signaled to close. If either heat exchanger valve is partially closed the bypass valve auto-shut safety function does not operate and the valve remains open. This provides the containment spray function, but without the heat exchangers first cooling the suppression pool water.

(5) The containment spray cooling discharge valve is automatically opened after the time delay unless the operator manually resets the time delay.

The containment spray cooling system will continue to operate until the drywell pressure or containment pressure drops below the trip point and the operator depresses the reset pushbutton removing the logic seal-in, thus the associated trip modules are reset. The operator can then initiate another mode of RHR.

7.3.1.1.4.6 Bypasses and Interlocks

No bypasses are provided for the containment spray cooling system.

Interlocks are provided to correctly line up RHR system valves to perform the containment spray cooling functions. These are shown in drawing E02-1RH99.

7.3.1.1.4.7 Redundancy and Diversity

Redundancy is provided for the containment spray cooling function by two separated divisional loops. Redundancy of initiation sensors is described in section 7.3.1.1.4.4 under "Initiating Circuits." The initiating circuits for containment spray are not diverse.

7.3.1.1.4.8 Actuated Devices

Drawing E02-1RH99 shows functional control arrangement of the containment spray cooling system.

The RHR A and RHR B loops are utilized for containment spray. Therefore, the pump and valves are the same for LPCI and containment spray cooling except that each has its own discharge valve. See Section 7.3.1.1.1.6.7, "LPCI Actuated Devices" for specific information.

7.3.1.1.4.9 Separation

Containment spray cooling is a Division 1 (RHR A) and a Division 2 (RHR B) system. Manual controls, logic circuits, cabling, and instrumentation for containment spray cooling are mounted so that Division 1 and Division 2 separation is maintained. Separation from Divisions 3 and 4 is also maintained.

7.3.1.1.4.10 Testability

The containment spray system is capable of being tested up to the last discharge valve during normal operation. Drywell and containment pressure and reactor vessel water level initiation channels are tested by cross comparison between related channels. Any disagreement between the display readings for the channels would indicate a failure. The instrument channel trip set point is verified by manually introducing a test signal with the calibration, and observing the channel display and indicator light on the output of the trip device (see Subsection 7.1.2.10). Testing for functional operability of the control logics is accomplished by use of continuous automatic pulse testing. The Automatic Pulse Test (APT), the sixth test, discussed in RPS Testability 7.2.1.1.4.8 is also applicable here for the containment spray function of RHR. Other control equipment is functionally tested during manual testing of each loop. Indication in the form of panel lamps and annunciators are provided in the control room.

7.3.1.1.4.11 Environmental Considerations

Refer to Table 3.11-5 for environmental qualifications of the subject system equipment.

7.3.1.1.4.12 Operational Considerations

7.3.1.1.4.12.1 General Information

Containment spray cooling is a mode of the RHR, and is not required during normal operation.

7.3.1.1.4.12.2 Reactor Operator Information

Temperature, flow, pressure, and valve position indications are available in the main control room for the operator to assess containment spray cooling operation. Alarms and indications are shown in Drawing M05-1075 (RHR P&ID) and drawing E02-IRH99.

7.3.1.1.4.12.3 Setpoints

For setpoints refer to the Operational Requirements Manual.

7.3.1.1.5 Shutdown Service Water Svstem Instrumentation and Controls

7.3.1.1.5.1 System Identification

The Shutdown Service Water System (SSWS) is designed to provide a reliable source of cooling water for station auxiliaries which are essential to safe shutdown of the reactor following the unlikely event of a loss-of-coolant-accident (LOCA) or a complete loss of offsite ac power.

Also, the system is designed to maintain the required flow of cooling water to the Residual Heat Removal (RHR) heat exchangers, to allow the reactor to cool down to a safe condition from normal operating power levels (i.e., maximum decay and residual heat).

The SSWS is a nuclear safety-related system composed of three independent subsystems (Divisions 1, 2, and 3) that correspond to electrical separation Divisions 1, 2, and 3.

7.3.1.1.5.2 Power Sources

The power sources for each subsystem's instrumentation and controls are the same electrical separation division as the subsystem they are monitoring or controlling and are capable of receiving standby power.

7.3.1.1.5.3 Equipment Design

The instrumentation and controls for the SSWS provide the facilities for the main control room operator to monitor system pressures and flows, to be alerted by alarms of system malfunction or automatic operations, and to manually control system operation. The instrumentation also provides automatic initiation of the system.

A pressure transmitter located downstream of the SSWS strainers provides the control room with indication of system pressure and automatically initiates SSWS pump operation on low system pressure. Local indication of the discharge pressure of each pump is also provided.

A flow nozzle is located downstream of the strainer and of the plant service water inlet supply line to monitor system flow. The nozzle is used for periodic system testing to satisfy the In-Service Inspection requirements of ASME Section XI and permanent instrumentation is provided. Additionally there is an orifice type flow element upstream of the RHR heat exchangers for monitoring flow rate of cooling water through the heat exchanger. This flow is measured by a differential pressure transmitter which transmits a signal to an indicator in the main control room.

A temperature element, located downstream of each of the RHR heat exchangers, provides inputs to a temperature recorder in the main control room. The recorder initiates a high temperature annunciator in the main control room. Local temperature indicators are provided to monitor the discharge water temperature from serviced equipment.

The SSWS system radiation level is an important parameter in detecting RHR heat exchanger tube leaks. Off-line radiation monitors draw a sample from each RHR heat exchanger water

discharge pipe and initiate a high radiation alarm in the main control room on high radiation. The monitors are described in Subsection 11.5.2.

7.3.1.1.5.4 Initiating Circuits

Each SSW subsystem pump can be manually started and stopped from the main control room during normal and abnormal operating conditions. This capability is augmented during abnormal operating conditions of loss of offsite electric power or loss-of-coolant accident (LOCA). A LOCA (with or without loss of off-site electric power) will automatically start each pump.

The shutdown service water system provides the backup water supply for cooling equipment, normally supplied from the non-essential plant service water system (PSWS). A pressure transmitter connected downstream of the SSWS/PSWS header will sense a low pressure when the PSWS pump flow decreases. An analog comparator unit connected to each transmitter will automatically start the associated shutdown service water pump.

7.3.1.1.5.5 Logic and Sequencing

A manual or automatic pump start signal will automatically shut the SSW/PSWS isolation valve thus isolating the essential SSWS from the nonessential PSWS.

Operation of the pumps in conjunction with the emergency diesel generator logic and sequencing is described in Subsection 8.3.1.1.2.

7.3.1.1.5.6 Bypasses and Interlocks

SSWS isolation valves for individual cooling loads are automatically opened by the system logic controlling the equipment being cooled. These interlocks are described elsewhere in Sections 7.3 and 7.6. The SSWS provides water to the deluge systems of the standby gas treatment system room main control room air supply filter packages, and the main control room makeup air filter packages. The SSWS also supplies emergency makeup water, main control room air supply filter packages, and the main control for the spent fuel storage pool. Manual controls are provided for both the pool makeup water and the deluge valves. These controls are discussed elsewhere in Section 7.3.

7.3.1.1.5.7 Redundancy and Diversity

The shutdown service water system is composed of three independent subsystems consisting of a pump, strainer, cooling loads, and controls and instrumentation. The redundancy required for a safety-related system is provided by the three independent subsystems in the shutdown service water system.

7.3.1.1.5.8 Actuated Devices

The normal and emergency operation of each shutdown service water system involves the following devices:

(1) shutdown service water pumps (actuation described in Subsection 7.3.1.1.5.4).

(2) shutdown service water strainer

(3) shutdown service water/plant service water nonessential header isolation valves (actuation described in Subsection 7.3.1.1.5.5)

(4) individual cooling load isolation valves.

A service water strainer is provided on each subsystem. Each strainer is an automatic differential pressure sensed initiated backwash device which is provided with manual control, automatic control and main control room alarms. Each strainer has a control switch, located on the respective motor control center, to manually initiate strainer self-cleaning (backwash). In addition, the Division 1and 2 service water strainer backwash is automatically initiated by high differential pressure and a timer stops the cycle of the strainer backwash. The Division 3 backwash is automatically initiated either by high differential pressure or at a preset pump operating time signal. A second timer stops the cycle of the strainer backwash. The timer settings can be adjusted/readjusted based on station operating experience.

A strainer bypass is provided for each subsystem which may be used if there is a malfunction or other problem with the strainer. A third operational mode is provided to flow water through the strainer and the bypass simultaneously.

Individual cooling load isolation valves are either air-operated or motor-operated type valves. These valves open or close based on a signal indicating the component being cooled is operating. The air-operated valves will fail in the open position upon loss of air pressure or electrical power. The motor-operated valves will fail-as-is, until emergency power is supplied in the predetermined sequence.

7.3.1.1.5.9 Separation

The instrumentation and controls of each SSWS subsystem are independent from the others. In order to maintain the required separation, the logic circuits, cabling, and instrumentation are mounted so that Divisions 1, 2, and 3 separation is maintained. There are no electric connections among the three subsystems.

A piping crosstie is provided between the Division 1 and Division 2 subsystems. Two isolation valves, one for each division, are provided and are normally closed. The crosstie may only be opened by operator action from the main control room.

7.3 1.1.5.10 Testability

The control and logic circuitry of each SSW subsystem can be tested during normal operating conditions. All components are accessible for inspection and calibration.

Testing of the system will not prevent its safe operation in the event an automatic initiation should occur.

7.3.1.1.5.11 Environmental Considerations

The SSWS instrumentation and controls have been qualified for the environmental conditions in which they must perform the safety-related functions.

7.3.1.1.5.12 Operational Considerations

Under conditions where the PSWS is available or no LOCA condition exists, the SSWS pumps and strainers are not operated. The PSWS will provide the cooling water to the SSWS cooling loads as required.

7.3.1.1.6 Main Control Room HVAC Control System - Instrumentation and Controls

The controls and instrumentation for the main control room HVAC system function to ensure that main control room personnel can remain inside all spaces served by the control room HVAC during normal conditions in compliance with Criterion 19 of Appendix A to 10CFR50, as detailed in section 9.4.1.4, and to ensure the habitability of the main control room under all station accident conditions, as described in Section 6.4 and Section 9.4. The design bases for the control and instrumentation are described in Subsection 7.1.2.1.15.

The piping and instrumentation diagram for the main control room system is shown in Drawing M05-1102.

7.3.1.1.6.1 Power Supply

The main control room HVAC system is comprised of redundant supply air fans, return air fans, electric heating coils (not safety-related), refrigeration units, chilled water pumps, supply air filter packages, makeup air filter trains consisting of electrical heating coils, fans and filters. Power supply for instrument and main control systems for each main control room HVAC system is fed from separate essential ac buses which can receive standby ac power. Motive power for isolation dampers, controls, and instrumentation comes from the bus that powers the corresponding equipment train.

7.3.1.1.6.2 Initiating Circuits, Logic, and Sequencing

Various components of each redundant main control room HVAC system are initiated as described below:

(1) System trains are started and stopped by control switches on the Balance-of-Plant benchboard. Train start signal first opens the two position zone isolation and return air dampers and then after a time delay, it starts the respective supply fan, and opens the respective minimum outside air dampers provided no abnormal signals are present. Train start signal also provides a permissive to the respective return air fan, makeup air fan and associated makeup air dampers and the chilled water pump.

(2) The supply and return air fans are started and stopped manually by control switches provided on local panels and automatically on start signal (after a time delay) from the respective train initiating switches on the Balance-of-Plant benchboard. The selection of remote train and selector switch is made through a remote-local selector switch provided on the LCP. Makeup air fans are started and stopped (after a time delay) by control switches provided on local panels and on the Balance-of-Plant benchboard and automatically on high radiation signals in minimum outside air intakes (after a time delay). HVAC equipment room supply fans are started and stopped by control switches on the Balance-of-Plant benchboard.

(3) Chilled water pumps are started and stopped manually by control switches on the local control panel and automatically on start signal from the respective train initiating switches on the Balance-of-Plant benchboard.

(4) Water chillers are automatically controlled by a temperature signal. Service water pressure and water pumps running are permissive signals which are required before the chiller can be manually started from the chiller control panel.

(5) On any equipment malfunction alarm on the main control board, the redundant HVAC system is manually started.

(6) The radiation detection system detects high radiation in the vicinity of the minimum outside air intake ducts and initiates the following actions when a system trip occurs:

a. alarms the high radiation levels in the affected intake on the Balance-of-Plant benchboard,

b. closes the normal path of makeup air supply to the main control room HVAC system,

c. causes makeup air from outside to be routed through the appropriate makeup air filter train.

(7) On detection of combustion products in the main control room by the ionization detection system, an alarm is annunciated on the Balance-of-Plant benchboard and the system,s supply air is routed through the normally bypassed smoke and odor adsorbing filters.

a. In addition, if the quality of outside air is proper, the operator can by remote manual operation of purge switch on the Balance-of-Plant benchboard OPEN the outside air intake dampers and fully OPEN the exhaust damper and close the recirculation air damper for purging the main control room air.

(8) The following actions will be initiated upon manual activation of the chlorine mode.

a. trips the makeup air fan,

b. closes all damper in the outside air intakes for the main control room HVAC system,

c. recirculates the room air through odor- and smoke-removing charcoal,

d. trips the locker room exhaust fan.

7.3.1.1.6.3 Bypass and Interlocks

(1) The two position zone isolation and return air dampers are interlocked to open on (i) start signal from the train control switch provided the system remote/local

selector switch is on remote, (ii) start signal from the supply fan local control switch provided the system remote/local selector switch is on local.

(2) The minimum outside air dampers are interlocked to open on (i) start signal from the main control switch provided the system remote/local selector switch is on remote, (ii) start signal from the supply fan local control switch provided the system remote/local selector switch is on local and provided the abnormal signal from the high radiation detection system is not present.

(3) Supply fan is interlocked to start/stop on start/stop signal from the train control switch.

(4) Chilled water pump is interlocked to stop on stop signal from the supply fan. This interlock is not bypassed.

(5) Return fan is interlocked with respective supply fan. Return fan cannot run unless the respective supply fan is running.

(6) The supply air filter bypass isolation damper is interlocked to open with the start of the respective supply fan. This interlock is bypassed by the radiation detection system, chlorine mode initiation and the ionization detection system. This damper is also interlocked to close when the respective absorber isolation dampers are proved open by limit switches. This interlock is not bypassed.

(7) The supply air filter absorber isolation dampers are interlocked to open automatically on a trip signal from radiation detection system or ionization detection system or manual initiation of the chlorine mode. This interlock is not bypassed.

(8) Makeup air isolation dampers are interlocked to open first on start signal to fan and then the fan starts after a time delay.

(9) Electric heating coil in the makeup air filter package is interlocked to energize on start signal from the makeup air fan.

(10) Maximum outside intake dampers are interlocked to open or close when the maximum outside exhaust dampers are opened or closed. These dampers are interlocked to close immediately on signal from chlorine mode initiation.

(11) Electric heating coil in the main control room air handling unit is interlocked to de-energize when any of the heater safeties are not satisfied. The heating coil contact is also interlocked to energize on start signal from the supply fan. An SCR temperature controller regulates the main control room supply air temperature.

(12) Locker exhaust fan is interlocked to shutdown when either fan discharge damper is closed.

(13) Each chiller is interlocked with proof of chilled water flow of the respective pump. Each chiller is interlocked to shutdown when the mixed air temperature upstream of the cooling coil is below its freeze protection setpoint.

7.3.1.1.6.4 Redundancy/Diversity

Instrumentation and controls for each redundant main control room HVAC system are completely independent of each other.

7.3.1.1.6.5 Actuated Devices

The normal and emergency operation of each main control room HVAC system involves the following actuated devices:

(1) supply air fan,

(2) return air fan,

(3) supply air electric heating coil,

(4) chilled water pump,

(5) refrigeration unit,

(6) makeup air electric heating coil,

(7) makeup air fan, and

(8) corresponding isolation and modulating control dampers.

7.3.1.1.6.6 Separation

The channels and logic circuits are physically and electrically separated to preclude the possibility that a single failure will prevent operation of the main control room HVAC system. Electrical cables for instrumentation and control on each main control room HVAC system are routed separately.

7.3.1.1.6.7 Testability

Means have been provided for checking the operational availability of complete Control Room Ventilation systems separately at sensor, module, and control channel basis and jointly as a complete system during normal operation or shutdown period. This is accomplished in the following ways, as appropriate.

7.3.1.1.6.7.1 Sensor Checks

Sensors required for sensing parameters such as control room ambient temperature, pressure, and humidity are easily accessible and are checked in the following ways:

(1) by perturbing the monitored variable; or

(2) by introducing and varying, as appropriate, a substitute input to the sensor of the same nature as the measured variable; or

(3) by monitoring the parameter through other accurately calibrated instruments and comparing the output of sensors in use with the output of a calibrated instrument.

7.3.1.1.6.7.2 Module Checks

Temperature transmitters, controllers, and the damper actuators are easily accessible and are tested in the following ways:

(1) by introducing a variable input signal and monitoring the corresponding outputs by use of other calibrated instruments; or

(2) by introducing a steady input signal and forcing the output of the controller to change by varying the setpoint; or

(3) by measuring the output of the controller and examining the damper position at corresponding input signals to the damper actuator. All instruments used are highly precision type and calibrated for proper testing.

7.3.1.1.6.7.3 Channel Checks

After checks have been proven to be satisfactory at the module level, each channel is checked and monitored for satisfactory operation.

7.3.1.1.6.7.4 System Checks

After each channel has been checked and proven to be operating properly, the whole instrument and control system is tested jointly.

7.3.1.1.6.8 Environmental Considerations

Temperature, pressure, humidity, and radiation dosage are considered in selection of equipment, instrumentation, and controls for the main control room HVAC system. The environmental zone maps are shown in Section 3.11 and the HVAC system is discussed in Section 9.4.

7.3.1.1.6.9 Operational Considerations

The main control room HVAC system is required during normal and abnormal station operating conditions. The automatic circuitry is designed to start the emergency equipment, if the signal for its initiation is received, as described in this Section. Provisions are made to allow manual control and operation of the various components of the main control room HVAC system from the Balance-of-Plant benchboard or from the local control panel.

7.3.1.1.6.10 Supporting Systems

A fire protection system is designed to supply station fire protection/shutdown service (as back up) water to each makeup air/supply air charcoal filter bed.

This system is described as follows:

(1) Two motor-operated deluge water valves are provided in parallel for each adsorber, one of which supplies water from the Fire Protection system and the other from Shutdown Service Water.

(2) Two solenoid valves are provided in parallel for each filter package drain line.

(3) Each motor-operated valve has a separate handswitch on the Balance-of-Plant benchboard.

(4) Two temperature sensors and two temperature control units are provided for each filter package:

a. Either one of the temperature sensors and control units shall annunciate at the main control panel on high temperature to alert an operator to high temperature conditions. The operator must decide whether it is necessary to open either one of the deluge valves described in items 1a or 1b. Opening of the deluge valve will energize a solenoid valve in the adsorber drain line causing it to open.

b. Either one of the temperature sensors and control units annunciate at the main control panel on high-high temperature. The operator may elect to open one or both deluge valves. Opening the deluge valve will energize and open a solenoid valve in the absorber drain line.

c. If either of the deluge valves for the control room HVAC make up fan air filter package (0VC09SA/SB) is opened, the make up air fan will trip off and the appropriate drain valve will open. If any of the deluge valves for the control room HVAC supply air filter package (OVC07SA/SB) is opened, the adsorber isolation dampers will close, the bypass isolation damper will open, the appropriate drain valve will open and the control room supply fan (OVC03CA/CB) will trip off.

7.3.1.1.7 Combustible Gas Control System (CGCS)

7.3.1.1.7.1 System Identification

The CGCS system consists of two major safety-related subsystems, drywell-containment mixing system and the hydrogen recombiner system. The drywell containment mixing system consists of two redundant compressors, each with its own piping, motor-operated suction valve and instrumentation. The system is designed to pump the atmosphere from the drywell through the suppression pool into the containment. The discharge, having mixed with the containment atmosphere, flows back into the drywell through air testable check valves. Each compressor, along with its corresponding suction valve and controls and instrumentation is powered from a separate Class 1E power source.

The hydrogen recombiner system consists of two redundant recombiners, each with its own piping and motor-operated containment isolation valves. The system is designed to take suction from the containment building, to recombine any hydrogen and oxygen and to discharge back into the containment building. Each recombiner along with its isolation valves and controls and instrumentation is powered from a separate Class 1E power source. Final system drawings for the CGS are referenced. The system P&ID is Drawing M05-1063.

7.3.1.1.7.2 Initiating Circuits

The drywell-containment mixing system is manually initiated from the main control room. One control switch initiates a compressor and opens its suction valve. Similarly a second control switch initiates the alternate compressor and its suction valve.

The hydrogen recombiner system is manually initiated from the main control room, one control switch opens both containment isolation valves for a given recombiner. A separate control switch initiates the recombiner. Similarly, two control switches are provided for the alternate recombiner and its containment isolating valves. Local control switches are provided at the control panel to allow testing.

7.3.1.1.7.3 Logic and Sequencing

The drywell-containment mixing system is designed such that a compressor starts and its suction valve opens (after a time delay) when initiated from the main control room.

The hydrogen recombiner system is designed such that when the control switch is placed in the start position power is fed to the local control panel. A timer starts the recombiner after a time delay. The timer is provided to eliminate any spurious alarms. Local handswitches allow for testing providing the main control room switch is in the TEST position.

The containment isolation valves which are normally closed during plant operation will automatically close upon receiving a LOCA signal, should they be open for testing. Should system initiation be required, the valves are opened by placing the control switch in the OPEN position.

7.3.1.1.7.4 Bypasses and Interlocks

Both the drywell containment mixing system and the hydrogen recombiner system are manually initiated. Therefore, there are no bypasses in the system. The containment isolation valves can be opened from the main control room when required for system initiation. For further description see Subsection 6.2.4.

The recombiner system is interlocked such that no component may be tested locally without the main control room switch for that component being placed in the TEST position. Once a system (Mixing Compressor or Recombiner) is initiated, operator action is required to shut off the system.

7.3.1.1.7.5 Redundancy and Diversity

Two completely independent and redundant drywell-containment mixing systems and recombiner systems are provided, including independent and redundant logic systems and mechanical equipment. The two logic systems and their associated mechanical devices are powered from separate ESF buses. Physical and electrical separation is maintained between the two systems.

Diversity is provided for the containment isolation valves by initiation from diverse signals (low reactor water level or high drywell pressure). The mixing compressors and recombiners are manually initiated by separate switches and controls.

7.3.1.1.7.6 Actuated Devices

The actuated devices of the CGCS system are the mixing compressors and suction valves, the hydrogen recombiners and their containment isolation valves. Only the recombiners are provided with remote manual test capability. The system can be manually operated from the

main control room. All actuated devices are provided with status indicators in the main control room.

7.3.1.1.7.7 Separation

The two drywell mixing compressors along with their associated piping, valves, controls and instrumentation are completely separated from each other both electrically and physically. Similarly, the two hydrogen recombiners along with their associated piping, valves, controls and instrumentation are separated from each other both electrically and physically.

7.3.1.1.7.8 Testability

All components of the CGCS system are fully accessible and can be tested during normal plant operation or shutdown.

7.3.1.1.7.9 Environmental Conditions

All safety-related controls and instrumentation are qualified for the environment in which they are located under both normal and accident conditions.

7.3.1.1.7.10 Operational Considerations

Once initiated, no further operator action is required other than to shutdown the system when conditions warrant.

7.3.1.1.8 Standby Power System Instrumentation and Controls

This system is discussed in Chapter 8.

7.3.1.1.9 Standby Gas Treatment System - Instrumentation and Controls

7.3.1.1.9.1 Power Supply

Power supply for the various components of each SGTS train is from separate essential ac buses that can receive standby ac power. Control power for isolation valves, dampers and controls comes from the bus that powers the corresponding equipment train.

Redundant motor-operated dampers are fed with power from independent essential buses. Solenoid valves operating redundant dampers are fed with power from independent essential buses.

7.3.1.1.9.2 Initiating Circuits, Logic, and Sequencing

Various components of each redundant SGTS system are initiated as described below:

(1) The system is automatically started in response to any one of the following signals:

a. high drywell pressure,

b. low reactor water level,

c. high radiation in containment refueling pool exhaust duct,

d. high radiation in containment building exhaust duct,

e. high radiation in fuel building exhaust duct,

f. high radiation in continuous containment purge duct.

(2) The system can also be started manually from the main control room.

(3) Standby Gas Treatment System Equipment Train (SGTSET) primary fans are started (i) automatically on the presence of any one of the signals described above, (ii) manually by independent control switches provided in the main control room.

(4) Primary fans are stopped (i) automatically on receipt of deluge valve open signal from the fire protection system, (ii) manually by same control switches in the main control room.

(5) SGTSET cooling fans automatically start after shutdown of the primary fans and stop after a set time delay.

(6) The cooling fans stop automatically on receipt of a charcoal adsorber bed deluge valve open signal, or start of the primary fan.

(7) The cooling fans can be operated manually by independent control switches in the main control room if added cooling of the charcoal beds is required.

7.3.1.1.9.3 Bypasses and Interlocks

(1) Auto start of a SGTS equipment train closes the normally open fuel building supply and exhaust isolation dampers.

(2) Manual/Auto start of SGTS primary fan opens the train inlet and outlet isolation dampers and energizes the flow control damper to modulate. This interlock is not bypassed during the SGTS operation.

(3) The SGTS cooling fan is interlocked to start whenever the primary fan stops. This interlock can be bypassed by manual operation of the control switch in the main control room. Cooling fan is also interlocked to stop on receipt of deluge valve open signal from the fire protection system.

(4) Cooling fan start signal opens outside atmosphere isolation dampers for cooling air to the SGTS train.

(5) SGTS electric heating coil is energized or de-energized whenever the primary fan is started or stopped. The heating coil is interlocked to trip whenever any one of the heater safeties is not satisfied.

(6) Manual/Auto start of the SGTS primary fan opens the normally closed intake isolation dampers from various areas, e.g., RWCU pump rooms, fuel building, etc.

7.3.1.1.9.4 Redundancy/Diversity

Instrumentation and controls for each standby redundant gas treatment system are completely independent of each other.

7.3.1.1.9.5 Actuated Devices

The normal and emergency operation of each standby gas treatment system involves the following actuated devices:

(1) Primary fan,

(2) Electric heating coil,

(3) Various associated isolation dampers,

(4) Modulating flow control damper,

(5) Cooling fan.

7.3.1.1.9.6 Separation

The channels and logic circuits are physically and electrically separated to preclude the possibility that a single failure will prevent operation of standby gas treament system. Electrical cables for instrumentation and control on each standby gas treatment system are routed separately.

7.3.1.1.9.7 Testability

Means have been provided for checking the operational availability of complete Standby Gas Treatment System separately at sensor, module, and control channel basis and jointly as a complete system during normal operation or shutdown period. This is accomplished in the following ways, as appropriate.

7.3.1.1.9.7.1 Sensor Checks

Sensors required for sensing parameters such as inlet/outle temperature and filter differential pressure, are easily accessible and are checked in the following ways:

(1) by perturbating the monitored variable; or

(2) by introducing and varying, as appropriate, a substitute input to the sensor of the same nature as the measured variable; or

(3) by monitoring the parameter through other accurately calibrated instruments and comparing the output of sensors in use with the output of a calibrated instrument.

7.3.1.1.9.7.2 Module Checks

Temperature transmitters, flow controllers, and the damper actuators are easily accessible and are tested in the following ways:

(1) by introducing a variable input signal and monitoring the corresponding outputs by use of other calibrated instruments; or

(2) by introducing a steady input signal and forcing the output of the controller to change by varying the setpoint.

7.3.1.1.9.7.3 Channel Checks

After checks have been proven to be satisfactory at the module level, each channel is checked and monitored for satisfactory operation.

7.3.1.1.9.7.4 System Checks

After each channel has been checked and proven to be operating properly, the whole instrument and control system is tested jointly.

7.3.1.1.9.8 Environmental Considerations

Temperature, pressure, humidity, and radiation dosage are considered in selection of various equipment, instrumentation, and controls for the standby gas treatment system. These are described in detail in Section 3.11.

7.3.1.1.9.9 Operational Considerations

The standby gas treatment system is required during normal (for testing only) and abnormal station operating conditions. The automatic circuitry is designed to start the emergency equipment, if the signal for its initiation is received, as described in this Section. Provisions are made to allow manual control and operation of the standby gas treatment system from the main control room.

7.3.1.1.9.10 Supporting Systems

A fire protection system designed to supply station fire protection or shutdown service (as back up) water to each charcoal adsorber, has been provided.

This system is described as follows:

(1) Two deluge valves, manually operated by a handswitch in the main control room, are mounted near charcoal adsorber. The deluge valves in parallel are connected to the station fire protection system and the shutdown service water system as a back up to the station fire protection system.

2) One temperature sensor and temperature control unit with dual settings are provided for each charcoal absorber:

a. One set of contacts annunciate in the main control room on high temperature to alert the operator to rising charcoal temperature.

b. Another set of contacts provide annunciation at the main control panel on high-high temperature. The station operator may elect to flood the adsorber by opening a deluge valve with a control switch on the main control board.

c. Either contact closure on high or high-high temperature annunciate in the main control room. Two high temperature stages for annunciation are provided.

7.3.1.1.10 Suppression Pool Makeup System

7.3.1.1.10.1 System Identification

The suppression pool makeup system consists of two redundant lines from the upper containment pool to the suppression pool. Also included in the system are two motor-operated valves in each line along with suppression pool level instrumentation and the initiating circuitry to operate the valves.

7.3.1.1.10.2 Equipment Design

The suppression pool makeup system is designed to add water to the suppression pool following a LOCA so that there will be an increased supply of water to the ECCS pumps. Four differential pressure type level transmitters measure suppression pool level. Each provides a signal to an initiation circuit which opens the corresponding valves following a LOCA.

7.3.1.1.10.3 Power Sources

Two separate ESF buses provide power to the system. The valves in one line are powered from one of the buses. Similarly the valves in the other line are powered from the other bus. The level instrumentation and initiating circuits are powered from the same electrical separation division which power their associated valves.

7.3.1.1.10.4 Initiating Circuits

The Suppression Pool Makeup System is both manually and automatically initiated.

The four level transmitters provide signals to corresponding trip units. Each trip unit contributes to a one-out-of-two logic which will initiate the opening of both valves in either line providing a LOCA has occurred. Each valve may be opened from the main control room during normal plant operation or after a LOCA.

The reactor mode switch permissive in the suppression pool makeup system initiation circuitry has been removed. Two additional switches, one in each electrical separation division, have been added to replace the reactor mode switch permissive in each suppression pool makeup system initiation circuit (Q&R 421.3).

7.3.1.1.10.5 Logic and Sequencing

The suppression pool makeup system is automatically initiated by low-low suppression pool level signal if a LOCA signal is present. It can also be manually initiated. Automatic or manual initiation can occur only when the permissive switch is in the ENABLE position. There is no automatic sequencing of the suppression pool makeup system.

7.3.1.1.10.6 Bypasses and Interlocks

The reactor mode switch permissive (bypass) has been removed from the suppression pool makeup system initiation circuitry. Two additional switches, one in each electrical separation division, have been added to replace the reactor mode switch permissive. The switches, or other administrative measures, may be used to disable initiation of the suppression pool makeup system and prevent inadvertent actuation during refueling. The suppression pool makeup system is interlocked to prevent automatic actuation without a coincident LOCA.

7.3.1.1.10.7 Redundancy and Diversity

Two completely independent and redundant suppression pool makeup lines are provided, including independent and redundant logic systems and mechanical equipment. The two logic systems and their associated motor-operated valves are powered from separate ESF buses. Physical and electrical separation is maintained between the two systems.

Diversity is assured by both automatic and manual initiation of the system.

7.3.1.1.10.8 Actuated Devices

The actuated devices of the suppression pool makeup system are the four motor-operated valves. All are provided with test capability and status indication in the main control room.

7.3.1.1.10.9 Separation

The two lines of the suppression pool makeup system along with their associated valves, controls and instrumentation are both physically and electrically separated from each other.

7.3.1.1.10.10 Testability

All components of the suppression pool makeup system are accessible and testable during normal plant operation and shutdown.

7.3.1.1.10.11 Environmental Conditions

All safety-related controls and instrumentation are qualified for the environment in which they are located under both normal and accident conditions.

7.3.1.1.10.12 Operational Considerations

Once the suppression pool makeup system is initiated, no further operator action is required.

7.3.1.1.11 Diesel Fuel Oil-Instrumentation and Controls

7.3.1.1.11.1 System Identification

The Diesel Fuel Oil Storage and Transfer System is designed to provide sufficient storage and supply capabilities of diesel fuel oil to ensure operation of the Emergency Diesel Generators for a minimum of 7 days at maximum post-LOCA load demands.

The system consists of three independent subsystems, one for each of the three emergency diesel generators. Each subsystem is identical except for storage capacity and consists of a

storage tank, transfer pump, day tank, and the associated piping, valves, strainers, filters, controls, and instrumentation to monitor system status and operation to ensure that the system satisfies the requirements. Each subsystem (division) is physically and electrically independent and separated from the other divisions.

The diesel fuel oil transfer pump takes suction from the storage tank and discharges to the day tank. The diesel fuel oil booster pumps, integral to and driven by the diesel engines, obtain fuel oil from the day tanks and discharge to the diesel engine fuel manifolds. The booster pumps are part of the diesel generator system and are described in Subsection 9.5.4.

7.3.1.1.11.2 Power Sources

Each transfer pump and its controls and instrumentation receives power from its respective divisional ESF power bus that is capable of receiving standby power.

7.3.1.1.11.3 Equipment Design

Each subsystem is identical and therefore only one is described in the following Subsections. Each subsystem consists of storage tank and day tank level instrumentation, transfer pump controls, and transfer pump discharge pressure indication.

7.3.1.1.11.4 Initiating Circuits

Storage tank and day tank level is monitored by level transmitters which provide inputs to analog comparator trip units. The trip units will actuate annunciators in the main control room on low storage tank fuel oil level and low day tank fuel oil level.

The day tank trip units and diesel generator running signals control the fuel oil transfer pump automatically. The transfer pumps may be manually started from the main control room.

7.3.1.1.11.5 Logic and Sequencing

The day tank level is controlled manually or automatically from the main control room by operating the transfer pump. By positioning handswitches in the START position, the transfer pump will start and transfer fuel oil from the storage tanks to the respective day tank. Placing the respective handswitch in the STOP position stops the transfer pump if the associated diesel engine is not running.

The transfer pumps are controlled automatically by the fuel oil day tank level trip units. The first trip unit will start the transfer pump on low fuel oil level; the second will stop the pump on high fuel oil level only if the diesel engine is not running. Each transfer pump will start when its diesel engine has started, regardless of day tank fuel oil level.

7.3.1.1.11.6 Bypasses and Interlocks

No bypasses are provided for the diesel fuel oil system. The transfer pumps are interlocked with the diesel start signals.

7.3.1.1.11.7 Redundancy and Diversity

No control redundancy or diversity is provided within each subsystem. Each subsystem is independent of the other subsystems. Day tank fuel oil level indication redundancy and diversity is provided for by the use of a local tank connected level indicator and a remote electrical indicator in the main control room. The remote indicator receives its signal from a local tank connected level transmitter.

7.3.1.1.11.8 Actuated Devices

The diesel fuel oil system actuates only the transfer pumps and main control room annunciator.

7.3.1.1.11.9 Separation

Each diesel fuel oil subsystem is separated from the others. In order to maintain the required electrical separation, the logic circuits, cabling, and instrumentation are separated and mounted so that Division 1, 2, and 3 physical separation is maintained. There are no electrical or piping interconnections among the three subsystems.

7.3.1.1.11.10 Testability

Each transfer pump is capable of being tested at all times. Each transfer pump is started from the main control room and operation can be verified by observing the local transfer pump discharge pressure gauges and the respective storage and day tank fuel oil levels. If the day tank is full, the pump can be tested because the day tank is equipped with a recirculating overflow line which discharges back to the storage tank.

7.3.1.1.11.11 Environmental Considerations

The diesel fuel oil controls and instrumentation located in the main control room have been qualified for their environment. The transmitter modules used for storage tank and day tank fuel oil level sensing are located near the tank and are environmentally qualified to preclude a component or system failure.

7.3.1.1.11.12 Operational Considerations

7.3.1.1.11.12.1 General Information

The diesel fuel oil storage tanks are normally maintained filled. Each transfer pump supplies its respective fuel oil day tank. To ensure that each day tank is maintained near full, the transfer pump associated with each diesel generator will automatically start whenever the diesel generator is started or when a low fuel oil level trip for the day tank is actuated. An overflow line for each day tank will recirculate any excess fuel oil back to its respective storage tank.

7.3.1.1.11.12.2 Reactor Operator Information

Storage tank fuel oil level indication is provided for operator information in the main control room. Day tank fuel oil level indication is provided on a tank fuel oil level trip unit located in the main control room. Tank level alarms and transfer pump running, stopped, auto trip and control power available indications are also provided. Local indications are provided for transfer pump discharge pressure and day tank fuel oil level.

7.3.1.1.11.12.3 Set Points

Set points are determined based upon gallons of fuel oil. Level, measured in units of pressure by a level transmitter, is determined from:

(1) Tank geometry (number of gallons at a given level).

(2) Elevation of transmitter in relation to the sensing line tank connection elevation.

7.3.1.1.12 Diesel-Generator Room HVAC System Instrumentation and Controls

7.3.1.1.12.1 Power Supply

Ventilation equipment, instruments and controls for the Diesel-Generator Room Ventilation System are fed with power from an independent Class 1E safety power bus, which serves the same division as the diesel generator.

7.3.1.1.12.2 Initiating Circuits, Logic, and Sequencing

The instruments and controls for each Diesel-Generator Room Ventilation system function are described below:

(1) Diesel-Generator Room Vent Fans are started (i) manually by independent control switches provided on a benchboard in the main control room, (ii) automatically on a signal initiated by the respective diesel generator start sequence.

(2) The Diesel-Generator Room Vent Fans are stopped (i) manually by the same control switches on the MCB, (ii) automatically on receipt of (a) trip signal from the diesel generator and the room temperature less than or equal the setpoint, (b) fire protection signal from the CO^2 fire protection system.

(3) Diesel-Generator Oil Room Exhaust Fans are started manually by independent control switches provided in the main control room. The division 1 exhaust fan will automatically start when the remote shutdown panel transfer switch is turned to emergency.

(4) Diesel-Generator Oil Room Exhaust Fans are stopped (i) manually by the same control switches in the main control room (ii) automatically on receipt of fire protection signal from the CO_2 fire protection system

(5) A temperature controller, located at the Diesel-Generator Room Vent Fan discharge modulates the outside air, return air and exhaust air dampers, when the Diesel Generator is in operation, to maintain the mixed air temperature at the predetermined setpoint.

7.3.1.1.12.3 Bypasses and Interlocks

The diesel Generator Auto interlock to start and stop the ventilation fan is bypassed by the manual start and stop position of the control switch. Outside air, return air and

exhaust air dampers are interlocked to energize at the initiation of the Diesel Generator Room Ventilation Fan. This interlock is not bypassed.

7.3.1.1.12.4 Redundancy/Diversity

Independent instruments and controls are provided for each independent diesel generator room ventilation system.

7.3.1.1.12.5 Actuated Devices

The following devices are actuated by the start of a diesel generator:

(1) Diesel-Generator Room Ventilation Fan,

(2) Outside air damper,

(3) Return air damper,

(4) Exhaust air damper.

7.3.1.1.12.6 Separation

The instrumentation and control circuits of each diesel generator room ventilation system are physically and electrically separated to preclude the possibility that a single failure affecting one diesel generator room ventilation system will prevent operation of the other subsystem.

7.3.1.1.12.7 Testability

Means have been provided for checking the operational availability of complete Diesel Generator Room Ventilation Control systems separately at sensor module and control channel basis and jointly as a complete system during the diesel operation or shutdown period. This is accomplished in the following ways, as appropriate.

7.3.1.1.12.7.1 Sensor Checks

Sensors required for sensing the loss of offsite power, diesel room ambient temperature, oil storage room ambient temperature, oil day tank room ambient temperature, supply air temperature, differential pressure across fans and the smoke detection are easily accessible and are checked in the following ways:

(1) by perturbing the monitored variable; or

(2) by introducing and varying, as appropriate, a substitute input to the sensor of the same nature as the measured variable; or

(3) by monitoring the parameter through other accurately calibrated instruments and comparing the output of sensors in use with the output of a calibrated instrument.

7.3.1.1.12.7.2 Module Checks

Temperature transmitters, controllers, current relays, auxiliary electric relays, smoke detection actuating module and the damper actuators are easily accessible and are tested in the following ways:

(1) by introducing a variable input signal and monitoring the corresponding outputs by use of other calibrated instruments; or

(2) by introducing a steady input signal and forcing the output of the controller to change by varying the setpoint; or

(3) by measuring the output of the controller and examining the damper position at corresponding input signals to the damper actuator. All instruments used are highly precision type and calibrated for proper testing.

7.3.1.1.12.7.3 Channel Checks

After checks have been proven to be satisfactory at the module level, each channel is checked and monitored for satisfactory operation.

7.3.1.1.12.7.4 System Checks

After each channel has been checked and proved to be operating properly, the whole instrument and control system is tested jointly.

7.3.1.1.12.8 Environmental Considerations

Temperature, pressure, humidity, and radiation dosage are considered in the selection of instruments, controls and devices for the Diesel Generator Room Ventilation system. The environmental zone maps are shown in Section 3.11 and the ventilation system is discussed in Section 9.4.

7.3.1.1.12.9 Operational Considerations

The Diesel Generator Room Ventilation system is required during abnormal station operating conditions. Diesel fuel oil storage room and oil day tank room ventilation is provided during both normal and abnormal station operation conditions. The automatic circuitry is designed to start the emergency equipment if the signal for its initiation is received as described in Subsection 9.4.5.1.

7.3.1.1.12.10 Supporting Systems

A CO Fire Protection System has been provided to serve various areas of the diesel generator facility.

7.3.1.1.13 Shutdown Service Water Pump Room Ventilation System - Instrumentation and Controls

7.3.1.1.13.1 Power Supply

Cooling and Ventilation equipment, instruments and controls for the SSW Pump Room Cooling System are fed with power from an independent Class 1E safety power bus, which serves the same division as each respective SSW pump.

7.3.1.1.13.2 Initiating Circuits, Logic, and Sequencing

The instruments and controls for each Shutdown Service Water Pump Room Ventilation system function are described below:

(1) SSW pump room cooling fans are started (i) manually by independent control switches provided in the main control room, (ii) automatically on a signal initiated by the SSW pump start sequence, (iii) automatically by SSW pump room temperature in excess of the setpoint, (iv) manually by the emergency position of an independent selector switch on the remote shutdown panel (DIV. 1 ONLY).

(2) The SSW pump room cooling fans are stopped (i) automatically when both the SSW pump is shutdown and the SSW pump room temperature falls below the setpoint, (ii) manually by the pull-to-lock position of independent control switches in the main control room, (iii) manual by the stop position of the independent control switches in the main control room only if the automatic interlock requirements have been satisfied.

7.3.1.1.13.3 Bypasses and Interlocks

(1) The SSW pump start and SSW pump room temperature automatic interlocks for cooling fan activation during the test mode are bypassed by the start position of an independent control switch located in the main control room. Automatic interlocks for DIV. 1 can also be bypassed during the test mode by the emergency position of an independent selector switch on the remote shutdown panel.

(2) The SSW cooling fan can be stopped only if the associated pump room temperature interlocks are satisfied.

(3) Cooling coil water valves are automatically interlocked with the cooling fan to open on fan start and close on fan stop. This interlock is not bypassed.

7.3.1.1.13.4 Redundancy/Diversity

Independent instruments and controls are provided for each redundant SSW Pump Room Cooling systems.

7.3.1.1.13.5 Actuated Devices

The following devices are actuated by the start of the SSW Pump

(1) SSW pump room cooling fan,

(2) Cooling coil valves.

7.3.1.1.13.6 Separation

The logic circuits of each SSW Pump Room Cooling system are physically and electrically separated to preclude the possibility that a single failure at one SSW Pump Room Cooling system will prevent operation of the other system. Electrical cables for instrumentation and control for each are routed separately.

7.3.1.1.13.7 Testability

Means have been provided for checking the operational availability of complete SSW Pump Room Cooling control systems separately at sensor module and control channel basis and jointly as a complete system during the pump operation or shutdown period. This is accomplished in the following ways; as appropriate.

7.3.1.1.13.7.1 Sensor Checks

Sensors required for sensing SSW Pump Room ambient temperature, differential pressure across fans etc., and time delay relays are easily accessible and are checked in the following ways:

(1) by perturbing the monitored variable; or

(2) by introducing and varying, as appropriate, a substitute input to the sensor of the same nature as the measured variable; or

(3) by monitoring the parameter through other accurately calibrated instruments and comparing the output of sensor in use with the output of a calibrated instrument.

7.3.1.1.13.7.2 Module Checks

Temperature transmitters, temperature relays, current relays, and auxiliary electric relays are easily accessible and are tested in the following ways:

(1) by introducing a variable input signal and monitoring the corresponding outputs by use of other calibrated instruments; or

(2) by introducing a steady input signal and forcing the output of the controller to change by varying the setpoint.

7.3.1.1.13.7.3 Channel Checks

After checks have been proven to be satisfactory at the module level, each channel is checked and monitored for satisfactory operation.

7.3.1.1.13.7.4 System Checks

After each channel has been checked and proved to be operating properly, the whole instrument and control system is tested jointly.

7.3.1.1.13.8 Environmental Considerations

Temperature, pressure, humidity, and radiation dosage are considered in the selection of various instruments, controls and devices for the SSW Pump Room Cooling system. These are described in detail in Section 3.11.

7.3.1.1.13.9 Operational Considerations

The SSW Pump Room Cooling system is required during normal and abnormal station operating conditions. SSW Pump Room ventilation is provided during both normal and abnormal station operation conditions. The automatic circuitry is designed to start the cooling equipment if the signal for its initiation is received as described in Subsection 9.4.5.4.

7.3.1.1.13.10 Supporting Systems

A Station Fire Protection System has been provided to serve the SSW Pump Rooms.

7.3.1.1.14 Essential Switchgear Heat Removal HVAC System - Instrumentation and Controls

7.3.1.1.14.1 Power Supply

Instruments and controls are fed from the same independent engineered safety buses feeding the associated essential switchgear heat removal HVAC system supply and exhaust fans.

7.3.1.1.14.2 Initiating Circuits, Logic, and Sequencing

The instruments and controls for heat removal systems are initiated as described below:

(1) Nuclear safety-related heat removal supply fans are automatically started when the equipment room ambient temperature rises above the high setpoint and stopped when the room ambient temperature drops below the reset value. The fans can be manually started and stopped by control switches located on the Balance-of-Plant benchboard in the main control room. Auto-signal can be overridden by the selection of pull-to-lock position on the control switch.

(2) Supply fan discharge isolation damper is energized to open at the same time the supply fan is initiated to start.

(3) The liquid line solenoid valves are energized to open as soon as the supply air pressure differential is established across the supply fan. This in turn, starts the refrigeration condensing unit. When the supply fan stops as a result of the equipment room ambient temperature dropping to the reset value, supply air pressure differential decreases, resulting in the liquid line solenoid valve de-energizing and closing. This, in turn, causes the refrigerator compressor suction pressure to decrease which results in unloading the compressor and stopping it upon further drop in load below the minimum capacity.

(4) Non-safety-related heat removal supply fans are selected to start or stop manually through a control switch located on Balance-of-Plant benchboard in the main control room. These fans are interlocked to stop automatically when the

related nuclear safety-related supply fan starts. A pull-to-lock feature has been provided on the control switch.

(5) Supply fan discharge isolation damper is energized to open at the same time non-safety-related supply fan is initiated to start.

(6) The chilled water valve is modulated by a pneumatic temperature controller, switchgear room ambient temperature is sensed through a pneumatic temperature transmitter to maintain the room ambient temperature.

(7) Battery room exhaust fans are started and stopped manually through their respective control switch located at the Balance-of-Plant benchboard in the main control room.

(8) The fan discharge isolation dampers are interlocked with the related exhaust fan to start opening as soon as the respective exhaust fan is initiated to start and close as soon as the exhaust fan is initiated to stop.

(9) Return air fans are started and stopped manually through their respective control switches located at the Balance-of-Plant benchboard in the main control room.

7.3.1.1.14.3 Bypasses and Interlocks

(1) The non-safety-related supply fans are interlocked with their nuclear safety-related companion supply fans so that the non-safety-related fan will shutdown if the safety-related fan was started. The non-safety-related fan will not start if the companion safety-related fan was running.

(2) Fan discharge isolation dampers are interlocked to open as soon as the associated supply fan is initiated to start.

(3) The liquid line solenoid valves are energized to open as soon as the supply air pressure differential is established across the supply fan which starts when equipment room ambient temperature rises above a preset value. This in turn starts the refrigeration condensing unit. When the supply fan stops as a result of the equipment room ambient temperature dropping to the reset value, supply air pressure differential decreases, resulting in the liquid line solenoid valve de-energizing and closing. This, in turn, causes the refrigerator compressor suction pressure to decrease which results in unloading the compressor and stopping it upon further drop in load below the minimum capacity. The low suction pressure is sensed by a pressure switch which will stop the compressor. The compressor will also be automatically stopped if abnormal operating conditions are detected.

(4) The nuclear safety-related fans are interlocked to shutdown when the equipment room ambient temperature drops below the reset value.

(5) The nuclear safety-related fans are interlocked so that the room temperature controller is bypassed when selection of control switch to the manual start or stop position is made.

7.3.1.1.14.4 Redundancy/Diversity

Independent instruments and controls are provided for each redundant Essential Switchgear Room Heat Removal system.

7.3.1.1.14.5 Actuated Devices

The following devices are actuated by the start of Switchgear Heat Removal system supply fans:

(1) Related fan discharge isolation dampers.

(2) Refrigeration condensing unit when related nuclear safety-related supply fan is started.

(3) Chilled water valve is activated to modulate as soon as the related non-safety related fan is started.

(4) Exhaust fan discharge isolation dampers are actuated as soon as their respective fans are initiated to start.

7.3.1.1.14.6 Separation

The logic circuits of each Switchgear Heat Removal Control system are physically and electrically separated to preclude the possibility that a single failure at one Switchgear Heat Removal System will prevent operation of the other system. Electrical cables for instrumentation and control for each Switchgear Heat Removal System are routed separately.

7.3.1.1.14.7 Testability

Means have been provided for checking the operational availability of complete Switchgear Heat Removal Control system separately at sensor module and control channel level and jointly as a complete system during the ECCS operation or shutdown period. This is accomplished in the following ways, as appropriate.

7.3.1.1.14.7.1 Sensor Checks

Sensors required for the sensing of the loss of offsite power Switchgear Heat Removal equipment cubicle ambient temperature, supply air temperature and differential pressure across fans are easily accessible and are checked in the following ways:

(1) by perturbing the monitored variable; or

(2) by introducing and varying, as appropriate, a substitute input to the sensor of the same nature as the measured variable; or

(3) by monitoring the parameter through other accurately calibrated instruments and comparing the output of sensor in use with the output of a calibrated instrument.

7.3.1.1.14.7.2 Module Checks

Temperature transmitters, controllers, current relays, auxiliary electric relays and the control valve actuator are easily accessible and are tested in the following ways:

(1) by introducting a variable input signal and monitoring the corresponding outputs by use of other calibrated instruments; or

(2) by introducing a steady input signal and forcing the output of the controller to change by varying the setpoint.

7.3.1.1.14.7.3 Channel Checks

After checks have been proven to be satisfactory at the module level, each channel is checked and monitored for satisfactory operation.

7.3.1.1.14.7.4 System Checks

After each channel has been checked and proved to be operating properly, the whole instrument and control system is tested jointly.

7.3.1.1.14.8 Environmental Considerations

Temperature, pressure, humidity, and radiation dosage are considered in the selection of various instruments, controls and devices for the Switchgear Heat Removal Control system. These are described in detail in Sections 3.11 and 9.4.

7.3.1.1.14.9 Operational Considerations

The Switchgear Heat Removal Control systems for all rooms is required to operate satisfactorily during normal and abnormal station operating conditions.

7.3.1.1.15 ECCS Equipment Room HVAC System - Instrumentation and Controls

7.3.1.1.15.1 Power Supply

Equipment, instruments and controls for the Emergency Core Cooling Ventilation System are fed with power from an independent Class 1E power bus, which serves the same division as the ECCS Ventilation equipment.

7.3.1.1.15.2 Initiating Circuits, Logic, and Sequencing

The instruments and controls for each Emergency Core Cooling Ventilation system function are described below:

(1) Except for the RHR heat exchanger rooms, each cooling fan will start automatically whenever the ECCS equipment in the respective cubicle is operated. Except for the HPCS, MSIV Inboard and MSIV Outboard room coolers each cooling fan is interlocked to start automatically if the respective equipment cubicle ambient temperature rises above the high setpoint. The control valve on the cooling coils will open as soon as the cooling fan starts and close when the respective fan stops.

(2) Except for the MSIV Inboard and Outboard rooms, each fan can be started and stopped manually through a control switch located in the main control room. The MSIV Inboard and MSIV Outboard Room cooling fans can be started and stopped manually by control switches located on a local panel.

(3) The LPCS, RHR and RCIC pump room cooling fans will stop automatically whenever the ECCS equipment in the respective cubicle is shutdown and the cubicle ambient temperature is normal. The RHR heat exchanger room cooling fans stop automatically only when cubicle ambient temperature returns to normal. HPCS, MSIV Inboard and MSIV Outboard room cooling fans are interlocked to stop automatically only when the respective ECCS equipment is shutdown.

7.3.1.1.15.3 Bypasses and Interlocks

The ECCS Vent fan auto interlock to start and stop is bypassed by the manual start pull to lock and stop position of the control switch. The cooling coils two position (open-close) control valve is interlocked to open as soon as the respective cooling fan is started, the valve will close as soon as the fan stops.

7.3.1.1.15.4 Redundancy/Diversity

Independent instruments and controls are provided for each redundant ECCS Equipment Room Ventilation system.

7.3.1.1.15.5 Actuated Devices

The following are ECCS Equipment Room HVAC actuated devices:

(1) ECCS Equipment Room vent fans

(2) ECCS Equipment Room cooling coil control valves

7.3.1.1.15.6 Separation

The logic circuits of each Emergency Core Cooling Ventilation control systems are physically and electrically separated to preclude the possibility that a single failure at one ECCS Equipment Room will prevent operation of the other system. Electrical cables for instrumentation and control for each ECCS Room are routed separately.

7.3.1.1.15.7 Testability

Means have been provided for checking the operational availability of complete Emergency Core Cooling Ventilation system separately at sensor module and control channel level and jointly as a complete system during the ECCS operation or shutdown period. This is accomplished in the following ways, as appropriate.

7.3.1.1.15.7.1 Sensor Checks

Sensors required for the sensing of the loss of offsite power, ECCS equipment cubicle ambient temperature, supply air temperature and differential pressure across fans are easily accessible and are checked in the following ways:

(1) by perturbing the monitored variable; or

(2) by introducing and varying, as appropriate, a substitute input to the sensor of the same nature as the measured variable; or

(3) by monitoring the parameters through other accurately calibrated instruments and comparing the output of sensor in use with the output of a calibrated instrument.

7.3.1.1.15.7.2 Module Checks

Temperature transmitters, controllers, current relays, auxiliary electric relays and the control valve actuator are easily accessible and are tested in the following ways:

(1) by introducing a variable input signal and monitoring the corresponding outputs by use of other calibrated instruments; or

(2) by introducing a steady input signal and forcing the output of the controller to change by varying the setpoint.

7.3.1.1.15.7.3 Channel Checks

After checks have been proven to be satisfactory at the module level, each channel is checked and monitored for satisfactory operation.

7.3.1.1.15.7.4 System Checks

After each channel has been checked and proved to be operating properly, the whole instrument and control system is tested jointly.

7.3.1.1.15.8 Environmental Considerations

Temperature, pressure, humidity, and radiation dosage are considered in the selection of various instruments, controls and devices for the Emergency Core Cooling Ventilation system. These are described in detail in Section 3.11.

7.3.1.1.15.9 Operational Considerations

The Emergency Core Cooling Ventilation systems for all rooms is required to operate satisfactorily during normal and abnormal station operating conditions. The automatic circuitry is designed to start the emergency equipment if the signal for its initiation is received as described in Subsection 9.4.5.3.

7.3.1.1.16 Suppression Pool Cooling Mode-(RHR) - Instrumentation and Controls

7.3.1.1.16.1 System Identification

Suppression pool cooling is an operating mode of the Residual Heat Removal System. It is designed to provide the capability of removing heat from the suppression pool water volume. The system is manually initiated when necessary.

7.3.1.1.16.2 Power Sources

Power for the RHR system is supplied from two ac buses that can receive standby ac power. Motive and control power for the two loops of suppression pool cooling instrumentation and control equipment are the same as that used for LPCI A and LPCI B; see Subsection 7.3.1.1.1.6.

7.3.1.1.16.3 Equipment Design

Control and instrumentation for the following equipment is required for this mode of operation:

(1) Two RHR main system pumps,

(2) Pump suction valves, and

(3) Suppression pool discharge valves.

Suppression pool cooling uses two pump loops, each loop with its own separate discharge valve. All components pertinent to suppression pool cooling operation are located outside of the drywell.

The suppression pool cooling mode is manually initiated from the main control room. This mode is put into operation to limit the water temperature in the suppression pool.

7.3.1.1.16.4 Initiating Circuits

Initiation of suppression pool cooling is performed manually by the control room operator. Initiation of suppression pool cooling “B” is identical to that of “A”.

7.3.1.1.16.5 Logic and Sequencing

The operating sequence of suppression pool cooling following receipt of the necessary initiating signals is as follows:

(1) The RHR system pumps continue to operate.

(2) Valves in other RHR modes are manually positioned or remain as positioned during LPCI.

(3) The service water pumps are started.

(4) Service water discharge valves to the RHR heat exchanger are opened.

The suppression pool cooling mode will continue to operate until the operator closes the suppression pool cooling discharge valves. The operator can then initiate another mode of RHR.

7.3.1.1.16.6 Bypasses and Interlocks

The suppression pool cooling mode is interlocked with the reactor low water and reactor low pressure. Once reactor vessel water level is restored, LPCI manual override is provided by the LPCI valve control switch in the close position.

7.3.1.1.16.7 Redundancy and Diversity

Redundancy is provided for the suppression pool cooling function by two separate logics, one for each loop.

7.3.1.1.16.8 Actuated Devices

Drawing E02-1RH99 shows functional control arrangement of the suppression pool cooling mode.

The RHR A and RHR B loops are utilized for suppression pool cooling. Therefore, the pump and valves are the same for LPCI and suppression pool cooling except that each mode has its own discharge valves.

7.3.1.1.16.9 Separation

Suppression pool cooling is a Division 1 (RHR A) and a Division 2 (RHR B) system. Manual control, logic circuits, cabling, and instrumentation for suppression pool cooling are mounted so that Division 1 and Division 2 separation is maintained.

7.3.1.1.16.10 Testability

Suppression pool cooling is capable of being tested during normal operation.

Testing for functional operability of the control logic can be accomplished by use of continuous automatic pulse testing. The Automatic Pulse Test (APT), the sixth test, in RPS Testability 7.2.1.4.8 is also applicable here for the suppression pool cooling function of RHR. Other control equipment is functionally tested during manual testing of each loop. Indication in the form of panel indicators and annunciators are provided in the control room.

7.3.1.1.16.11 Environmental Conditions

Refer to Section 3.11 for environmental qualifications of the system components.

7.3.1.1.16.12 Operational Considerations

7.3.1.1.16.12.1 General Information

Suppression pool cooling is a mode of the RHR and can be used during normal power operation to limit suppression pool temperature.

7.3.1.1.16.12.2 Reactor Operator Information

Sufficient temperature, flow, pressure, and valve position indications are available in the main control room for the operator to accurately assess suppression pool cooling operation. Alarms and indications are shown in drawing E02-1RH99.

7.3.1.1.16.12.3 Set Points

There are no set points. The system is manually initiated.

7.3.1.1.17 CGCS Equipment Cubicle Cooling System

7.3.1.1.17.1 System Identification

The CGCS Equipment Cubicle Cooling System is designed to remove equipment heat from the CGCS equipment cubicles and maintain temperatures within the equipment design limits. There are two redundant systems in separate cubicles and each cubicle is provided with an independent cooling system. The controls and instrumentation for each cooling system are independent.

7.3.1.1.17.2 Power Supply

Equipment controls and instrumentation for each CGCS Equipment Cubicle Cooling System train are powered from a separate Class 1E power source.

7.3.1.1.17.3 Equipment Design

The controls and instrumentation of the CGCS Equipment Cubicle Cooling System are safety-related. The instrumentation and power supply are designed to meet IEEE-279 and IEEE-308 criteria.

7.3.1.1.17.4 Initiating Circuits and Logic

The instrument and control functions for each CGCS Equipment Cubicle Cooling System train are described below:

1. Each cubicle cooling fan will automatically start when the respective CGCS equipment starts. The fan can be started manually from a control switch on the local control panel.

2. Each cubicle fan will be automatically stopped when its respective CGCS equipment is not running.

7.3.1.1.17.4.1 Indication and Annunciation

Indication and annunciation are provided as follows:

1. Each control switch is provided with ON, AUTO-TRIP and OFF indicating lights showing the operating status of the fan-coil unit.

2. Each fan trip is also annunciated on the local control panel.

3. A common trouble alarm is provided in the main control room.

4. A local differential pressure indication is provided for each fan-coil unit.

7.3.1.1.17.5 Bypass and Interlocks

1. The fan-coil unit will not run when its respective control switch is in pull-to-lock position.

2. A motor-operated valve controlling the flow of water to each fan-coil unit automatically opens when its associated fan is started and can not be closed until its associated fan is stopped.

7.3.1.1.17.6 Redundancy and Diversity

The CGCS Equipment Cubicle Cooling System is designed with redundancy. The controls for each train are separate and independent.

7.3.1.1.17.7 Actuated Devices

Starting any of the fans opens the motor-operated valve supplying water from the shutdown service water system to the associated cooling coil in the fan-coil unit.

7.3.1.1.17.8 Testability

Means have been provided for checking the operational availability of complete CGCS Equipment Cubicle Cooling System separately at sensor, module, and control channel level and jointly as a complete system during normal operation or shutdown period. This is accomplished in the following ways, as appropriate.

7.3.1.1.17.8.1 Sensor Checks

Sensors are easily accessible and checked in the following ways:

(1) by perturbing the monitored variable; or

(2) by introducing and varying, as appropriate, a substitute input to the sensor of the same nature as the measured variable; or

(3) by monitoring the parameter through other accurately calibrated instruments and comparing the output of sensors in use with the output of a calibrated instrument.

7.3.1.1.17.8.2 Module Checks

Modules are easily accessible and are tested in the following ways:

(1) by introducing a variable input signal and monitoring the corresponding outputs by use of other calibrated instruments; or

(2) by introducing a steady input signal and forcing the output of a controller to change by varying the setpoint.

7.3.1.1.17.8.3 Channel Checks

After checks have been proven to be satisfactory at the module level, each channel is checked and monitored for satisfactory operation.

7.3.1.1.17.8.4 System Checks

After each channel has been checked and proven to be operating properly, the whole instrument and control system is tested jointly.

7.3.1.1.17.9 Environmental Conditions

All safety-related controls and instrumentation are qualified for the environment in which they are located under both normal and accident conditions.

7.3.1.1.17.10 Operational Considerations

The system is designed so that no operator action is required for the system to function normally, however, manual operation is also possible. Sufficient indications and alarms are provided for operator interaction, if needed, and monitoring.

7.3.1.1.18 Reactor Core Isolation Cooling System

This system is discussed in Section 7.4.1.1.

7.3.1.1.19 Feedwater Leakage Control Mode (FWLC) - Instrumentation and Controls

7.3.1.1.19.1 System Identification

Feedwater leakage control is an operating mode of the Residual Heat Removal System. In this mode, RHR flow is diverted to create a water seal on the outboard feedwater system containment isolation check valves (1B21-F032A/B) and gate valves (1B21-F065A/B) after a DBA LOCA to prevent the release of containment atmosphere through the feedwater piping release path. It is required to be manually initiated approximately 20 minutes after a DBA LOCA. Opening of the valves is prevented by signals from pressure switches if feedwater line pressures are greater than the RHR line maximum operating pressure.

The RHR system is shown in P&ID M05-1075.

7.3.1.1.19.2 Power Sources

The instrumentation and controls of the two FWLC valves are powered by separate 120 vac divisional power that can receive standby ac power. Each of the two loops is powered by a different division.

7.3.1.1.19.3 Equipment Design

The feedwater leakage control valves are designed to divert flow from the RHR LPCI, suppression pool cooling, or containment spray modes without reducing flow in those modes below the modes' functional design bases. Pressure switches provide permissives to ensure the FWLC valves are not inadvertently opened when feedwater pressure is above the operational pressure of the RHR system.

7.3.1.1.19.4 Initiating Circuits

The feedwater leakage control valves are manually initiated from the main control room.

7.3.1.1.19.5 Logic and Sequencing

The sequence of manual initiation of the FWLC mode is described in Section 5.4.7.2.6 (2). The logic of the valve permissives is described in Section 7.3.1.1.19.6.

7.3.1.1.19.6 Bypasses and Interlocks

Permissives are provided to ensure that the Division 1 FWLC valve is not opened, or does not remain open, unless both feedwater isolation valves (1B21-F065A and lB21-F065B) are closed and the pressure in the feedwater lines is low enough as not to exceed the maximum operation pressure of the Division 1 RHR system. Permissives are also provided to ensure that the Division 2 FWLC valve is not opened, or does not remain open, unless the pressure in the feedwater lines is low enough as not to exceed the maximum operation pressure of the Division 2 RHR system.

7.3.1.1.19.7 Redundancy and Diversity

Redundancy is provided by the FWLC function by two separated divisional loops.

7.3.1.1.19.8 Actuated Devices

The actuated devices for the FWLC mode are the two FWLC motor operated valves.

7.3.1.1.19.9 Separation

FWLC is a Division 1 (RHR A) and Division 2 (RHR B) subsystem. Manual controls, logic circuits, cabling, and instrumentation for FWLC are mounted so that Division 1 and Division 2 separation is maintained.

7.3.1.1.19.10 Testability

The FWLC mode will be tested in reactor modes 4 or 5.

7.3.1.1.19.11 Environmental Considerations

FWLC electrical cables are environmentally qualified for the harsh areas in which they are located. All other instrumentation and control components are located in mild environmental areas and therefore do not require environmental qualification.

7.3.1.1.19.12 Operational Considerations

7.3.1.1.19.12.1 General Information

The FWLC mode will not be initiated until approximately 20 minutes after a LOCA. The FWLC mode can be utilized during operation of RHR in the LPCI, suppression pool cooling, or containment spray cooling modes.

7.3.1.1.19.12.2 Reactor Operator Information

Valve position indications are available in the main control room (indicator lights and computer output). RHR system out-of-service annunciation is provided for FWLC valve overload or power loss.

7.3.1.1.19.12.3 Set Points

Setpoints for the pressure. switch permissives are shown in the Instrumentation Setpoint Log.

7.3.1.2 Design Basis Information

IEEE Standard 279 defines the requirements for design bases. Using the IEEE 279 format, the following nine Paragraphs fulfill this requirement for systems and equipment described in this Section.

7.3.1.2.1 Conditions

The plant conditions which require protective action involving the systems of this Section and other Sections are examined and presented in Chapter 15, Appendix 15A.

7.3.1.2.2 Variables

The plant variables which require monitoring to provide protective actions for ECCS and containment isolation functions are identified in the Design Specification Data Sheets and the CPS Technical Specifications. For other ESF described, refer to the individual system discussions or to Chapter 15 where safety analysis parameters for each event are cited.

7.3.1.2.3 Numbers of Sensors and Location

The number of instrument channels provided to monitor each variable are depicted in Tables 7.3-7 thru 7.3-11. The minimum number of channels required are listed in CPS Technical Specifications. For other ESF described, refer to the individual system discussions or to Chapter 15 where safety analysis parameters for each event are cited.

7.3.1.2.4 Operational Limits

Operational limits for each safety-related variable trip setting are selected to be far enough above or below normal operating levels so that a spurious ESF system initiation is avoided. It is then verified by analysis that the release of radioactive materials, following postulated gross failures of the fuel or the nuclear system process barrier, is kept within acceptable bounds.

7.3.1.2.5 Margin Between Operational Limits

The margin between operational limits and the limiting conditions of operation for the ESF systems are those parameters as listed in the Technical Specifications and the Operational Requirements Manual (ORM) for the ECCS. The margin includes the consideration of sensor accuracy, response times and set point drift. Suitable indication is provided to alert the reactor operator of the onset of unsafe conditions.

7.3.1.2.6 Levels Requiring Protective Action

Levels requiring protective action are listed in trip level settings CPS Operational Requirements Manual.

7.3.1.2.7 Range of Energy Supply and Environmental Conditions of Safety Systems

(See Table 3.11-5 and Subsection 3.1.2.1.4.1 for environmental conditions and Chapter 8 for the range of energy supply.)

CRVICS channel, logic and main steam line isolation valve 120 Vac power is provided by the NSPS buses. The CRVICS circuitry will operate without failure within the range of -10% to +10% of rated voltage.

ECCS 125 Vdc power is provided by the station batteries, the HPCS battery, and the 125 Vdc Division 4 battery. ECCS 120 Vac power is provided by the NSPS busses.

ESF systems motor-operated valve power is supplied from motor control centers provided with essential power sources.

7.3.1.2.8 Malfunctions, Accidents, and Other Unusual Events Which Could Cause Damage to Safety System

Chapter 3 covers the description of the following credible accidents and events; floods, storms, tornados, earthquakes, fires, LOCA, pipe break outside containment, and feedwater line break. Each of these events is discussed below for the ESF systems and ECCS.

Floods

The buildings containing ESF systems and ECCS components have been designed to meet the PMF (Probable Maximum Flood) at the site location. This ensures that the buildings will remain water-tight under PMF conditions including wind generated wave action and wave runup.

Storms and Tornados

The buildings containing ESF components have been designed to withstand meteorological events described in Section 3.3.2. for miscellaneous station property during a postulated tornado, but this will not impair the protection system capabilities.

Earthquakes

The structures containing ESF components have been seismically qualified as described in Sections 3.7 and 3.8, and will remain functional during and following a safe shutdown earthquake (SSE). Seismic qualification of instrumentation and electrical equipment is discussed in Section 3.10.

Fires

To protect the ESF systems in the event of a postulated fire, the redundant portions of the systems are separated by fire barriers. If a fire were to occur within one of the sections or in the area of one of the panels, the ESF systems functions would not be prevented by the fire. The use of separation and fire barriers ensures that even though some portion of the systems may be affected, the ESF systems will continue to provide the required protective action.

Fire protection systems and program are discussed in Subsection 9.5.1, and the Clinton Power Station Fire Protection Evaluation Report.

LOCA

The following ESF system components are located inside the drywell and would be subjected to the effects of a design basis loss-of-coolant accident (LOCA):

Reactor vessel pressure and reactor vessel water level instrument taps and sensing lines and drywell pressure sensing lines, which terminate outside the drywell.

These items have been environmentally qualified to remain functional during and following a LOCA as discussed in Section 3.11 and indicated in Table 3.11-5.

7.3.1.2.9 Minimum Performance Requirements

The Operational Requirements Manual provides instrument setpoints and response time requirements which incorporate the effects of instrument performance such as accuracy, range, magnitude and rates of change of sensed variables. Further descriptions of instrument performance requirements are included in the applicable System Design Specifications and Engineering Calculations.

7.3.1.3 Final System Drawings

Logic, schematic, electrical interconnection which were supplied under separate cover are discussed in Section 1.7.1.

7.3.2 Analysis

7.3.2.1 Emergency Core Cooling Systems (ECCS) - Instrumentation and Controls

7.3.2.1.1 General Functional Requirement Conformance

Chapters 15.0, "Accident Analyses," and 6.0, "Engineered Safety Features," evaluate the individual and combined capabilities of the emergency core cooling systems. For the entire range of nuclear process system break sizes, the cooling systems prevent fuel cladding temperatures from exceeding the limits of 10 CFR 50.46.

Instrumentation for the emergency core cooling systems must respond to the potential inadequacy of core cooling regardless of the location of a breach in the reactor coolant pressure boundary. Such a breach inside or outside the containment is sensed by reactor low water level. The reactor vessel low water level signal is the only emergency core cooling system initiating function that is completely independent of breach location. Consequently, it can actuate HPCS, LPCS, and LPCI.

The other major initiating function, drywell high pressure, is provided because pressurization of the drywell will result from any significant nuclear system breach anywhere inside the drywell.

The initiation of the automatic depressurization system, by employing both reactor vessel low water level and drywell high pressure in coincidence, requires that the nuclear system breach be inside the drywell. For a nuclear system breach outside the drywell but inside containment, only a reactor vessel low water level signal, two sequential time delays, and an ECCS pump running signal are required for initiation of the ADS. This control arrangement is satisfactory in view of the automatic isolation of the reactor vessel for breaches outside the drywell and because the automatic depressurization system is required only if the HPCS fails.

An evaluation of emergency core cooling systems controls shows that no operator action is required to initiate the correct responses of the emergency core cooling systems. However, the control room operator can manually initiate every essential operation of the emergency core

cooling systems. Alarms and indications in the control room allow the operator to assess situations that require the emergency core cooling system and verify the responses of each system. This arrangement limits safety dependence on operator judgment, and design of the emergency core cooling systems control equipment has appropriately limited response.

The redundance of the control equipment for the emergency core cooling systems is consistent with the redundancy of the cooling systems themselves. The arrangement of the initiating signals for the emergency core cooling systems, as shown in Figures 7.3-7 and 7.3-8, is also consistent with the arrangement of the systems themselves.

No failure of a single initiating trip channel can prevent the start of the cooling systems when required or inadvertently initiate these same systems.

An evaluation of the control schemes for each emergency core cooling system component shows that no single control failure can prevent the combined cooling systems from providing the core with adequate cooling. In performing this evaluation the redundancy of components and cooling systems was considered.

The minimum number of trip channels required to maintain functional performance is given in Tables 7.3-8, 7.3-9, 7.3-10, and 7.3-11. Determinations of these minimums considered the use and redundancy of sensors in control circuitry and the reliability of the controlled equipment in any individual cooling system.

The control arrangement used for the automatic depressurization system is designed to avoid spurious actuation (see Table 7.3-9). The ADS relief valves are controlled by two trip systems per division, both of which must be in the tripped state to allow system initiation. Within each trip system, either a coincident low reactor water level trip and 6-minute time delay, or a coincident high drywell pressure trip and low reactor water level trip are required in addition to a 105-second time delay to initiate a trip system.

The conditions represented by Tables 7.3-8, 7.3-9, 7.3-10 and 7.3-11 are a result of a functional analysis of each individual emergency core cooling system. Because of the redundant methods of supplying cooling water to the fuel in a loss-of-coolant accident situation and because fuel cooling must be assured in such a situation, the minimum trip channel conditions in the referenced tables exceed those required operationally to assure core cooling capability.

The only equipment protective devices that can interrupt planned emergency core cooling system operation are those that must act to prevent complete failure of the component or system. In no case can the action of a protective device prevent other redundant cooling systems from providing adequate cooling to the core.

Controls for ECC systems are located in the main control room and are under supervision of the main control room operator.

The environmental capabilities of instrumentation for the emergency core cooling systems are discussed in the descriptions of the individual systems. Components that are located inside the drywell and are essential to emergency core cooling system performance are designed to operate in the drywell environment resulting from a loss-of-coolant accident. Essential instruments located outside the drywell are also qualified for the environment in which they must perform their essential function.

Special consideration has been given to the performance of reactor vessel water level sensors, pressure sensors, and condensing chambers during rapid depressurization of the nuclear system. (See Supplement 1 of NEDO-24708 - "Additional Information Required for NRC Staff Generic Report on Boiling Water Reactors".)

Capability for emergency core cooling following a postulated accident may be verified by observing the following indications:

(1) annunciators and status lights for HPCS, LPCS, LPCI and ADS

(2) flow and pressure indications for each emergency core cooling system,

(3) valve position lights indicating open or closed valves,

(4) relief valve position inferred from reactor pressure indications and discharge pipe temperature monitors,

(5) supplementary performance monitoring system logging of trips in the emergency core cooling network.

A system failure analysis is provided and discussed in Section 6.3, "Emergency Core Cooling System."

7.3.2.1.2 Specific Regulatory Requirements Conformance

The following compliance statements are applicable to all modes of RHR operation (i.e., containment spray mode, suppression pool cooling mode, and shutdown cooling mode) to the extent stated in the related compliance Sections of Subsections 7.3.2 and 7.4.2.

7.3.2.1.2.1 Regulatory Guides

7.3.2.1.2.1.1 Regulatory Guide 1.6

In accordance with Regulatory Guide 1.6, ECCS electric power loads are divided into Division 1, Division 2 and Division 3 so that loss of any one division will not prevent the minimum safety functions from being performed. No interconnections exist which can compromise redundant power sources.

7.3.2.1.2.1.2 Regulatory Guide 1.11

Conformance to this Regulatory Guide is discussed in Subsection 6.2.4.

7.3.2.1.2.1.3 Regulatory Guide 1.22

Conformance to this regulatory guide is achieved by providing system and component testing capabilities either during reactor power operation or shutdown.

7.3.2.1.2.1.4 Regulatory Guide 1.29

Instrumentation is classified as Seismic I and is covered under Subsection 3.10.

7.3.2.1.2.1.5 Regulatory Guide 1.30

The requirements for the installation, inspection, and testing included in ANSI N45.2.4 (IEEE Std. 336) have been implemented during construction phase. Conformance to IEEE 336-1971 (ANSI N45.2.4-1972) is discussed in conjunction with Regulatory Guide 1.30. Refer to USAR Section 1.8.

7.3.2.1.2.1.6 Regulatory Guide 1.32

Conformance is described in the conformance to General Design Criterion 17 and Industry Standard IEEE 308. Also see Subsection 7.1.2.6.8.

7.3.2.1.2.1.7 Regulatory Guide 1.47

Automatic indication is provided in the control room to inform the operator that a system is inoperable. Indication is provided to show that either a system or a part of a system is not operable. An example of automatic indication of ECCS inoperability is demonstrated by the instruments which form part of a one-out-of-two-twice logic and can be removed from service for calibration.

The importance of providing accurate information for the reactor operator and reducing the possibility for the indicating equipment to adversely affect its monitored safety system are discussed in the following Paragraphs:

(1) Individual indicators are arranged together on the main control room panel to indicate what function of the system is out of service, bypassed or otherwise inoperable. All bypass and inoperability indicators, both at a system level and component level, are grouped only with those items that will prevent a system from operating if needed.

(2) As a result of design, preop testing and startup testing, no erroneous bypass indication is anticipated.

(3) These indication provisions serve to supplement administrative controls and aid the operator in assessing the availability of component and system level protective actions. This indication does not directly provide safety functions.

(4) The annunciator initiation signals are provided through isolation devices and cannot prevent required protective actions.

(5) Each indicator, which can be individually tested, will be provided with dual lamps. Testing of these indicators is accomplished when the associated equipment is periodically tested.

Also see Subsection 7.1.2.6.11.

7.3.2.1.2.1.8 Regulatory Guide 1.53

Compliance with NRC Regulatory Guide 1.53 is achieved by specifying, designing, and constructing the emergency core cooling systems so that they meet the single failure criterion described in Section 4.2 of IEEE 279 and IEEE 379. Redundant sensors are used, and the

logic is arranged to reduce the possibilities that a failure in a sensing element or the decision logic or an actuator will prevent or spuriously initiate protective action. Separated channels are employed, so that a fault affecting one channel will not prevent the other channels from operating properly.

Facilities for testing are provided so that the equipment can be operated in various test modes to confirm that it will operate properly when called upon. Testing incorporates all elements of the system under one test mode or another, including sensors, logic, actuators, and actuated equipment. The testing is planned to be performed at intervals so that there is an extremely low probability of failure in the periods between tests. During testing there are always enough channels and systems available for operation to provide proper protection.

7.3.2.1.2.1.9 Regulatory Guide 1.62

Means are provided for manual initiation of Emergency Core Cooling at the system level through the following armed pushbutton switches:

(1)	HPCS:	One switch in Division 3
(2)	ADS:	Four switches, two in Division 1 and two in Division 2
(3)	LPCS/LPCI (RHR) A:	One switch in Division 1
(4)	LPCI (RHR) B/LPCI (RHR) C:	One switch in Division 2

Operation of these switches accomplishes the initiation of all actions performed by the automatic initiation circuitry.

The amount of equipment common to initiation of both manual and automatic emergency core cooling is kept to a minimum through implementation of manual initiation of emergency core cooling at the final devices of the protection system. No failure in the manual, automatic or common portions of the protection system will prevent initiation of a sufficient amount of emergency core cooling equipment by manual or automatic means.

Manual initiation of emergency core cooling, once initiated, goes to completion as required by IEEE 279 Section 4.16.

7.3.2.1.2.1.10 Regulatory Guide 1.63

Conformance to Regulatory Guide 1.63 is discussed in Subsection 8.1.6.1.12.

7.3.2.1.2.1.11 Regulatory Guide 1.75

Separation within the ECCS is such that controls, instrumentation, equipment and wiring is segregated into four separate divisions designated 1, 2, 3 and 4. Control and motive power separation is maintained in the same manner. Separation is provided to maintain the

independence of the 4 divisions of circuit and equipment so that the protection functions required during and following any design basis event can be accomplished.

(1) All redundant equipment and circuits within ECCS require divisional separation. All pertinent documents and drawings identify in a distinctive manner separation and safety related status for each redundant division.

(2) All redundant circuits and equipment are located within safety class enclosures. Separation is achieved by barriers, isolation devices and/or physical distance. This type of separation between redundant systems assures that a single failure of one system will not affect the operation of the other redundant system.

(3) The separation of redundant Class 1E circuits and equipment within the ECCS is such that no physical connections are made between divisions. This separation criteria assures that the failure of equipment of one redundant system cannot disable circuits or equipment essential to the operation of the other redundant systems.

(4) Associated circuits are in accordance with class 1E circuit requirements up to and including the isolation devices. Circuits beyond the isolation devices do not again become associated with Class 1E circuits.

Pertinent design documents and drawings identify the associated circuits in a distinctive manner.

(5) Separation between Class 1E and non-Class 1E circuits will meet the same minimum requirements as for separation between redundant Class 1E circuits or they will be treated as associated circuits.

7.3.2.1.2.1.12 Regulatory Guide 1.89

Conformance to Regulatory Guide 1.89 is discussed in Subsection 3.11.

7.3.2.1.2.1.13 Regulatory Guide 1.97

See Subsection 7.1.2.6.23 for discussion of the degree of conformance.

7.3.2.1.2.1.14 Regulatory Guide 1.100

See Section 3.10 for discussion of the degree of conformance.

7.3.2.1.2.1.15 Regulatory Guide 1.105

See Subsection 7.1.2.6.25 for discussion of the degree of conformance.

7.3.2.1.2.1.16 Regulatory Guide 1.118

See Subsection 7.1.2.6.26 for discussion of the degree of conformance.

7.3.2.1.2.2 10 CFR 50 Appendix A

See Subsection 7.1.2.7 for discussion of Criterion 1 through 5.

(1) Criterion 10

The emergency core cooling system has been designed with appropriate margin to assure that acceptable fuel design limits are not exceeded during any condition of normal operation including the effects of anticipated operational occurrence.

(2) Criterion No. 13

Conformance to this requirement is achieved by monitoring appropriate variables over the range expected and providing containment isolation, emergency core cooling, and other functions to maintain the variables within the prescribed ranges.

(3) Criteria 17 and 18

ECCS power supply loads are rigorously divided into Division 1, Division 2, and Division 3. The independence of these circuits prevents compromise, and enhances inspection of safety-related power supply systems. See also Section 3.1.

(4) Criteria 19 through 22, 24, 29, 33, 35, and 37

Conformance to these criteria are discussed in Subsections 7.3.1.1.1.3, 7.3.1.1.1.4, 7.3.1.1.1.5 and 7.3.1.1.1.6. See also Section 3.1.

7.3.2.1.2.3 Industry Standards

7.3.2.1.2.3.1 IEEE 279 Criteria for Protection Systems for Nuclear Power Generating Stations

Compliance of the Emergency Core Cooling Systems with IEEE 279 is detailed below.

7.3.2.1.2.3.1.1 General Functional Requirement (IEEE 279 Paragraph 4.1)

Automatic initiation of the ECCS is provided for by sensors measuring reactor vessel low water level and drywell high pressure. The following systems are individually initiated by automatic means:

(1) HPCS

(2) ADS, including SRV subsystem

(3) LPCS

(4) LPCI mode of the RHR System-LPCI (RHR)

This automatic initiation is accomplished with precision and reliability commensurate with the overall ECCS objective and is effective over the full range of environmental conditions depicted below:

(1) Power supply voltages

HPCS: HPCS has its own dc control, ac control, and motor power which is independent of offsite power and onsite power for Divisions 1 and 2 ECCS.

ADS: Tolerance is provided for complete loss of one division of ac and dc power, but not for loss of both Divisions 1 and 2 sources for ADS.

LPCS: System will not tolerate Division 1 ac or dc power failure; however, network redundancy assures adequate core cooling capability.

LPCI: (RHR) Tolerance is provided to any degree of (RHR) Division 1 and 2 ac power supply failure such that failures cannot negate successful low pressure cooling. DC power supply failure will affect only one of the two LPCI Divisions.

Tolerance to supply voltage variations, short of power loss, is discussed in NEDO-21617-A, "Analog Transmitter/Trip Unit System for Engineered Safeguard Sensor Trip Inputs".

(2) Power supply frequency

HPCS: Full range of frequency available is tolerated.

ADS: No ac controls are used.

LPCS: Excessive frequency reduction is indicative of an onsite power supply failure and equipment shutdown in that division is required.

LPCI: (RHR) Excessive frequency reduction is indicative of an onsite power supply failure and equipment shutdownin that division is required.

(3) Temperature

HPCS; ADS; LPCS; and LPCI(RHR):

Operable at all temperatures that can result from an accident. See also Section 3.11.

(4) Humidity

HPCS; ADS; LPCS; and LPCI(RHR):

Operable at humidities, including steam that can result from a loss-of-coolant accident. See also Section 3.11.

(5) Pressure

HPCS; ADS; LPCS; and LPCI (RHR):

Operable at all pressures resulting from a LOCA as required. See also Section 3.11.

(6) Vibration

HPCS; ADS; LPCS; and LPCI (RHR):

Tolerance to conditions stated in Section 3.10.

(7) Malfunctions

Overall ECCS:

Network tolerance to any single component or division failure to operate on command.

(8) Accidents

HPCS; ADS; LPCS; and LPCI (RHR):

Network tolerance to all design basis accidents without malfunction.

(9) Fire

Overall ECCS:

Network tolerance to single divisional wireway fires or mechanical damage.

(10) Explosion

HPCS; ADS; LPCS; and LPCI (RHR):

Explosions are not defined in design bases.

(11) Missiles

ADS:

Separate routing of the ADS conduits within the drywell reduces to a very low probability the potential for missile damage to more than one conduit to ADS or damage to the pilot solenoid assemblies of ADS values.

Overall ECCS:

Network tolerance to any single missile destroying no more than one pipe, wireway, or cabinet.

(12) Lightning

HPCS and ADS:

Ungrounded dc system not subject to lightning strikes.

LPCS and LPCI(RHR):

Tolerance to lightning damage limited to one auxiliary bus system. See comments under (1) and (2).

(13) Flood

HPCS; ADS; LPCS; and LPCI (RHR):

All control equipment is located above flood level by design.

(14) Earthquake

HPCS; ADS; LPCS; and LPCI (RHR):

Tolerance to conditions stated in Section 3.10.

(15) Wind and Tornado

HPCS; ADS; LPCS; and LPCI (RHR)

Seismic class 1 building houses all control equipment. It is built to withstand high winds (see 7.3.1.2.8).

(16) System Response Time

HPCS; ADS; LPCS; and LPCI (RHR):

Responses are within the requirements of need to start ECCS.

(17) System Accuracies

HPCS; ADS; LPCS; and LPCI (RHR):

Accuracies are within that needed for correct timely action.

(18) Abnormal Ranges of Sensed Variables

HPCS; ADS; LPCS; and LPCI (RHR):

Sensors will not malfunction or "Freeze" due to saturation when overranged.

7.3.2.1.2.3.1.2 Single Failure Criterion (IEEE 279 Paragraph 4.2)

HPCS: The HPCS, by itself, is not required to meet the single failure criterion. The control logic circuits for initiation and control are housed in a single division 3 electronic panel and the

power supply for the control logic and other HPCS equipment is from division 3 power sources.

The HPCS initiation sensors and wiring up to the HPCS logic cabinet are designed to accept a single failure criterion. Physical separation of instrument lines is provided so that no single instrument rack destruction or single instrument line or pipe failure can prevent HPCS initiation. The HPCS initiation sensors are located in Division 3 and Division 4.

ADS: The ADS system, comprised of two independent sets of controls for the two pilot solenoids, meets the single failure criterion. This arrangement utilizes two out of two logic in each of the control divisions which prevents the single failure from causing inadvertent systems initiation or failure to initiate when required. The input signals to the valve solenoids are also separated such that no single valve logic or load driver card failure within the NSPS will actuate the ADS or open a single or multiple ADS/SRV. Tolerance to single failures in accordance with IEEE 379 has been incorporated.

SRV: The SRV function, comprised of two independent sets of controls for the two pilot solenoids on each SRV meets all credible aspects of the single failure criterion. More than one failure would have to occur to cause inadvertent actuation or failure to actuate of more than one SRV. Tolerance to the above ADS single failures or events have been incorporated into the control system design and installation.

LPCS: The LPCS by itself, is not required to meet the single failure criterion. The LPCS logic circuits for initiation and control are housed in a single electronic panel and the power supply for the control logic and other equipment is from power sources within division 1. This logic also initiates LPCI Loop A. Failure of a single LPCS initiation sensor will not degrade LPCS action.

LPCI: Redundancy in equipment and control logic circuitry is provided so that it is highly unlikely that the complete LPCI loops can be rendered inoperative.

LPCS and LPCI control logic circuits work in conjunction. LPCS control logic initiates Loop A pump and valves. LPCI control logic initiates Loop B and C pumps and valves.

Tolerance to single failures in accordance with IEEE 379 is provided in the control logic and initiation circuitry so that a single failure would not disable all three loops:

7.3.2.1.2.3.1.3 <u>Quality Components (IEEE-279 Paragraph 4.3)</u>

HPCS: Components used in the HPCS control system have been carefully selected for the specific application. Ratings have been selected to ensure against significant deterioration during anticipated duty over the lifetime of the plant as illustrated below:

(1) Controls are energized to operate and have brief and infrequent duty cycles.

(2) Motor starters and breakers are effectively derated for motor starting applications since their nameplate ratings are based on short circuit interruption capabilities as well as on continuous current carrying capabilities.

Short-circuit current-interrupting capabilities are many times the starting current for the motors being started, so that normal duty does not begin to approach maximum equipment capability.

(3) Motor starting equipment ratings include allowance for a much greater number of operating cycles than the emergency core cooling application will demand, even including testing.

(4) Instrumentation and controls are the heavy duty industrial type which have been subjected to the manufacturers normal quality control and have undergone functional testing on the panel assembly floor as part of the integrated module test prior to shipment of each panel. Only components which have demonstrated a high degree of reliability and serviceability in other functionally similar applications, or qualified by tests, are selected for use in the HPCS control system.

Furthermore, a quality assurance program is required to be implemented and documented by equipment vendors, with the intent of complying with the requirements set forth in 10 CFR 50, Appendix B.

ADS: Components used in the ADS control system including the SRV function have been carefully selected for the specific application. Ratings have sufficient conservatism to ensure against significant deterioration over the lifetime of the plant as described below:

(1) Controls are energized to operate and have brief and infrequent duty cycles.

(2) Instrumentation and controls are the heavy duty industrial type which have been subjected to the manufacturer's normal quality control and have undergone functional testing on the panel assembly floor as part of the integrated module test prior to shipment of each panel. Only components which have demonstrated a high degree of reliability and serviceability in other functionally similar applications, or qualified by tests, are selected for use in the ADS.

Furthermore, a quality assurance program is required to be implemented and documented by equipment vendors, with the intent of complying with the requirements set forth in 10 CFR 50, Appendix B.

LPCS: The discussion in this Section for HPCS applies equally to the LPCS.

LPCI: The discussion in this Section for HPCS applies equally to the LPCI subsystem.

7.3.2.1.2.3.1.4 Equipment Qualification (IEEE 279 Paragraph 4.4)

HPCS: No components of the HPCS control system are required to operate in the drywell environment except for the condensation pots of the vessel level transmitters.

Other process sensor equipment for HPCS initiation is located outside the drywell and is capable of accurate operation in ambient temperature conditions that result from abnormal (loss-of-ventilation and loss-of-coolant accident) conditions.

Panels and electronic cabinets are located in the main control room or other rooms with a safety-related HVAC system.

The HPCS control system components have demonstrated their reliable operability in previous applications in nuclear power plant protection systems or in extensive industrial use. (See sections 3.10 and 3.11.)

ADS: The solenoid valves, their cables, and the relief valve mechanical operators of the automatic depressurization system and SRV subsystem are located inside the drywell and must remain operable in the loss-of-coolant accident environment. These items are selected with capabilities that permit proper operation in the most severe environment resulting from a design basis loss-of-coolant accident and have been environmentally tested to verify the selection. Gamma and neutron radiation is also considered in the selection of these items and only materials which are expected to tolerate the integrated dosage superimposed on other environmental factors for at least a 40-year period of normal plant operation without excessive deterioration are used (i.e., no need for a replacement is anticipated).

Other components of the ADS control system which are required to operate in the drywell environment are the condensate pots for the vessel level sensors. All other sensory equipment is located outside the drywell and is capable of accurate operation with wider swings in ambient temperature than results from normal or abnormal (loss-of-ventilation and loss-of-coolant accident) conditions. Reactor vessel level sensors are of the same type as for the RPS and meet the same standards. Drywell high pressure sensors are of the same type as used for the RPS and meet the same standards. Control panels and logic cabinets are located in the main control room or auxiliary room environment which presents no new or unusual operating considerations.

LPCS: No components of the LPCS control system are required to operate in the drywell environment except for the condensation pots of the vessel level sensors and the testable check valve.

Other process sensor equipment for LPCS initiation is located outside the drywell and is capable of accurate operation in ambient temperature conditions that result from abnormal (loss-of ventilation and loss-of-coolant accident) conditions.

Panels and the main logic cabinets are located in the main control room.

Components in the LPCS control system have demonstrated their reliable operability in previous applications in nuclear power plant protection systems, in extensive industrial use or by testing. (See Section 3.10 and 3.11.)

LPCI: No components of the LPCI System are required to operate in the drywell environment except for the condensate pots used with the vessel level sensors. All other sensory equipment is located outside the drywell and is capable of acceptable operation with wider changes in ambient temperature than results from normal or abnormal (loss-of-ventilation and loss-of-coolant accident) conditions. Reactor vessel level sensors are of the same type as for the RPS and meet the same standards. Drywell high pressure sensors are of the same type as used for the RPS and meet the same standards. The testable check valves which are located inside the drywell are considered to be part of the piping system rather than part of the control system. Control panels and logic

cabinets are located in a main control room environment which presents no new or unusual operating considerations.

Most components used in the LPCI subsystem have demonstrated reliable operation in similar nuclear power plant protection systems or in industrial applications or by testing.

7.3.2.1.2.3.1.5 Channel Integrity (IEEE 279 Paragraph 4.5)

The ECCS system instrument initiation channels (low water level and high drywell pressure) are designed to satisfy the channel integrity objective without taking credit for safe failure modes of equipment.

The ECCS instrumentation located inside the drywell has been environmentally qualified to meet the accident and environmental conditions described in Subsection 3.11 and Table 3.11-5. The ECCS instrumentation located outside the drywell including the drywell pressure sensors and instrument sensing lines have been environmentally qualified to meet the accident and environmental conditions described in Section 3.11.

ECCS equipment is protected from changes in the power supply as described in 7.3.2.1.2.3.1.1 and 7.3.1.1.1.2.

Therefore, ECCS is provided with sufficient channel integrity to assure protective action when required.

The SRV system initiation channels (high reactor pressure) satisfy the channel integrity objective of the Subsection.

The LPCS system instrument initiation channels (low water level and high drywell pressure) are designed to satisfy the channel integrity objective without taking credit for safe failure modes of operation.

The LPCI system initiation channels (low water level or high drywell pressure) are designed to satisfy the channel integrity objective without taking credit for "SAFE" failure modes of equipment.

7.3.2.1.2.3.1.6 Channel Independence (IEEE 279 Paragraph 4.6)

HPCS: Channel independence for initiation sensors monitoring each variable is provided by mechanical separation. The A and C sensors for reactor vessel level, for instance, are located on one local instrument rack and the B and D sensors are located on a second instrument rack widely separated from the first. The redundant sensors have process taps which are widely separated. Disabling of one or both sensors in one location does not disable the control for initiation.

HPCS independence from the other redundant ECCS equipment is maintained.

ADS: Channel independence for sensors exposed to each variable is provided by electrical and mechanical separation. The A and E sensors for reactor vessel level, for instance, are located on one local instrument rack identified as Division 1 equipment and the B and F sensors are located on a second instrument rack widely separated from the first and identified as Division 2 equipment. The A and E sensors have a common pair of

process taps which are widely separated from the corresponding taps for sensors B and F. Disabling of one or both sensors in one location does not disable the control for both of the auto depressurization control divisions.

Logic components for the ADS and SRV are separated into Division 1 and Division 2 located in separate cabinets. ADS and SRV manual controls are separated on the main control panels by metal barriers.

LPCS: Channel independence does not strictly apply to the LPCS system since it has a single divisional logic trip system. Independence is provided between LPCS and the redundant portions of the ECCS network in Divisions 2 (LPCI) and 3 (HPCS).

LPCI: Channel independence of the sensors for each variable is provided by electrical isolation and mechanical separation. The A and E sensors for reactor vessel low water level, for instance, are located on one local instrument rack that is identified as Division 1 equipment, and the B and F sensors are located on a second instrument rack, widely separated from the first and identified as Division 2 equipment. The A and E sensors have a common process tap, which is widely separated from the corresponding tap for sensors B and F. Disabling of one or all sensors in one location does not disable the control for the other Division.

Logic cabinets for Division 1 are in a separate location from that of Division 2, and each division is complete in itself, with its own Class 1E battery control and instrument power bus, power distribution buses, and motor control centers. The divisional split is carried all the way from the process taps to the final control element, and includes both control and motive power supplies.

7.3.2.1.2.3.1.7 Control and Protection Interaction (IEEE 279 Paragraph 4.7)

The HPCS, ADS, LPCS and LPCI systems are designed as safety systems and are designed to be independent of plant control systems.

7.3.2.1.2.3.1.8 Derivation of System Inputs (IEEE 279 Paragraph 4.8)

HPCS: Inputs that start the HPCS system are direct measures of the variables that indicate the need for high pressure core cooling; viz., reactor vessel low water level or high drywell pressure.

ADS: Inputs that start the auto-depressurization system are direct measures of the variables that indicate both the need and acceptable conditions for rapid depressurization of the reactor vessel; viz., reactor vessel low water level concurrent with high drywell pressure or reactor vessel low water level followed by a 6-minute time delay, and at least one low pressure core cooling subsystem developing adequate discharge pressure, plus adequate time delay to allow HPCS to operate if available.

LPCS: Inputs that start the LPCS system are direct measures of the variables that indicate the need for low pressure core cooling; viz., reactor vessel low water level, and high drywell pressure. Reactor vessel level and drywell pressure sensors are described in Subsection 7.3.1.1.1.5.4.

LPCI: Inputs that start the LPCI subsystem are direct measures of the variables that indicate the need for low pressure core cooling; viz., reactor vessel low water, high drywell pressure, and reactor low pressure. Reactor vessel level is sensed by vessel water level transmitters. Drywell high pressure is sensed by pressure transmitters.

7.3.2.1.2.3.1.9 Capability of Sensor Checks (IEEE 279 Paragraph 4.9)

All sensors are of the pressure sensing type and are installed with calibration taps and instrument valves, to permit testing during normal plant operation or during shutdown. The sensors can be calibrated by application of pressure from a low pressure source (instrument air, inert gas bottle, water, etc.) after closing instrument valve and opening the calibration valve.

However, transmitter output is continually monitorable from the control room by observing meters on master trip units. Accuracy checks can be made by cross comparison of each of the 4 channels (A, E, B & F). For this reason, transmitters need not be valved out of service more than once per operating fuel cycle.

The trip units mounted in the main control room are calibrated separately by introducing a calibration source and verifying the set point through the use of a digital readout on the trip calibration module.

7.3.2.1.2.3.1.10 Capability for Test and Calibration (IEEE 279 Paragraph 4.10)

HPCS: The HPCS control system is capable of being completely tested during normal plant operation to verify that each element of the system, active or passive, is capable of performing its intended function. Sensors can be exercised by applying test pressures. Logic can be exercised by means of remote plug-in test fixtures used alone or in conjunction with single sensor tests. Pumps can be started by the appropriate breakers, to pump against system injection valves and/or return to the suppression pool through test valves while the reactor is at pressure. Motor-operated valves can be exercised by the appropriate control relays and starters, and all indications and annunciations can be observed as the system is tested. Check valves are tested manually during plant shutdown. HPCS water will not actually be introduced into the vessel except initially before fuel loading.

ADS: The auto-depressurization system is not tested in its entirety during actual plant operation but provisions are incorporated so that operability of all elements of the system can be verified at periodic intervals. The operability of individual valves may be verified by means of the individual control switches on the main control room panels. Transmitter open-circuit or short-circuit failures are immediately detected and annunciated by action from the mated trip units. In addition, the analog transmitter outputs are constantly metered in the main control room and can be cross-checked by comparison to the other three redundant channels which monitor the same parameter. Therefore, transmitters need only be surveillance tested once per fuel cycle. Testing of control circuitry is accomplished at the control cabinets by means of the automatic pulse test equipment described in Section 7.3.1.1.1.4.1.8.

LPCS: The discussion in this Section regarding HPCS test and calibration applies equally to the LPCS.

LPCI: The discussion in this Section regarding HPCS test and calibration applies equally to the LPCI subsystem.

7.3.2.1.2.3.1.11 Channel Bypass or Removal from Operation (IEEE 279 Paragraph 4.11)

HPCS: Calibration of a sensor that introduces a single instrument channel trip will not cause a protective action without the coincident trip of a second channel.There are no instrument channel bypasses. Removal of a sensor from operation during calibration does not prevent the redundant instrument channel from functioning if accident conditions occur.

ADS: Calibration of each trip unit will introduce a single instrument channel trip. This does not cause a protective action without the coincident trip of the other channel. Removal of an instrument channel from service during calibration will be brief and will not significantly increase the probability of failure to operate. There are no channel bypasses in the auto depressurization system, however, a manual inhibit switch is provided which prevents automatic ADS actuation. Removal of a trip unit from operation during calibration does not prevent the redundant division from functioning if accident conditions occur. The manual reset buttons can delay the auto-depressurization for a limited time. However, releasing either one of the two reset buttons will allow automatic timing and action to restart if the sensor permissives so dictate.

SRV: There are no channel bypasses in the SRV subsystem.

LPCS: The discussion in this Section regarding HPCS channel bypass is equally applicable to the LPCS system.

LPCI: The discussion in this Section regarding HPCS channel bypass is equally applicable to the LPCI subsystem.

7.3.2.1.2.3.1.12 Operating Bypasses (IEEE 279 Paragraph 4.12)

HPCS: There are no operating bypasses in the HPCS.

ADS: There are no operating bypasses in the ADS (or SRV function).

SRV: There are no channel bypasses in the SRV subsystem.

LPCS: There are no operating bypasses in the LPCS.

LPCI: The LPCI subsystem has no provision for operating bypasses.

7.3.2.1.2.3.1.13 Indication of Bypasses (IEEE 279 Paragraph 4.13)

Automatic bypass indication is provided as described in 7.3.2.1.2.1.7.

LPCI: There are no automatic bypasses of any part of the LPCI control system. Deliberate opening of the valve motor breaker will give indication in the control room, because both valve position lights would be deenergized and the divisional "Power Loss or Thermal Overload of Any Valve" indicator would turn on.

It is not practically possible to monitor all elements of the subsystem (including all normally deenergized current carrying parts) continually for continuity and thus give

indication of inoperability in the control room. This would introduce excessive complexity and could adversely affect reliability or cause inadvertent false operation.

The racking-out of 4160 volt breakers is controlled procedurally and access is limited to authorized personnel. Consequently, this is considered equivalent to removing a valve or pump for maintenance. Abnormal position of the breaker is indicated in the main control room.

7.3.2.1.2.3.1.14 Access to Means for Bypassing (IEEE 279 Paragraph 4.14)

HPCS/ADS/LPCS/LPCI (RHR):

Access to motor control centers and instrument valves is controlled as discussed for the LPCI subsystem in this section. Access to other means of bypassing are located in the main control room and therefore are under the administrative control of the operators.

Control power breakers are in dc distribution cabinets which are lockable and under administrative control of the operator.

LPCI: Access to switch-gear, motor control centers and instrument valves may be procedurally controlled by the following means:

(1) Lockable doors on the emergency switchgear rooms, and

(2) Lockable breaker control switch handles in the motor control centers, and

(3) Restricted access to ESF instruments and valves outside the containment, and

(4) Administrative control of access to containment.

7.3.2.1.2.3.1.15 Multiple Trip Settings (IEEE 279 Paragraph 4.15)

This Section is not applicable to the HPCS, ADS, LPCS, or LPCI systems because all trip set points are fixed. Except for SRV, for which all trip points are fixed except the low-low set values. The requirement is met with single failure-proof set point transfer as discussed in Subsection 7.3.1.1.1.4.2.6.

7.3.2.1.2.3.1.16 Completion of Protective Action Once Initiated IEEE 279 Paragraph 4.16)

HPCS: The final control elements for the HPCS system are essentially bistable, i.e., motor-operated valves stay open or closed once they have reached their desired position, even though their starter may drop out (which they do when the limit switch is reached). In the case of pump starters, the auto-initiation signal is electrically sealed in.

Thus protective action once initiated (i.e., flow established) must go to completion or continue until terminated by deliberate operator action or automatically stopped on high vessel water level or system malfunction trip signals.

ADS: Each of the redundant depressurization control subsystems seals in electrically and remains energized until manually reset by one of the two reset pushbuttons.

SRV: SRV actuation remains energized until reactor pressure is reduced to below the high pressure setpoint.

LPCS: The final control elements for the LPCS system are essentially bistable, i.e., pump breakers stay closed without control power, and motor-operated valves stay open once they have reached their open position, even though the motor starter may drop out (which will occur when the valve open limit switch is reached).

In the event of an interruption in ac power, the control system will reset itself and recycle on restoration of power. Thus protective action once initiated must go to completion or continue until terminated by deliberate operator action.

LPCI: The discussion provided in this Section for the LPCS is equally applicable to the LPCI subsystem.

7.3.2.1.2.3.1.17 Manual Initiation (IEEE 279 Paragraph 4.17) Paragraph 4.17)

HPCS: The HPCS has an armed manual initiation pushbutton in parallel with the automatic initiation output circuit. With exception of the high level interlock, the manual initiation function does not depend on devices common to automatic control.

ADS: The ADS has four manual initiation switches. Two switches are in each of the two ADS systems (A&B). Both switches for one system have to be closed to manually initiate ADS. To further preclude inadvertent actuation, each switch is equipped with a collar which must be turned before electrical contacts of the pushbutton are effective. Thus, to initiate ADS manually, the operator must turn two collars and depress two pushbuttons. Whenever a collar is turned, an annunciator is actuated.

The ADS automatic initiation time delay logic (105 seconds) is provided to give HPCS ample time to automatically restore vessel level so that ADS actuation will not be needed. This time delay is not provided for manual initiation since the operator will not initiate ADS until he determines it necessary.

SRV: Each SRV can individually be manually initiated, using either logic division control switch for each SRV. The position of the control switches is key locked under administrative control.

LPCS: The LPCS has an armed manual initiation pushbutton in parallel with the automatic initiation logic. This manual initiation will also initiate LPCI A.

LPCI: In no event can failure of an automatic control circuit for equipment in one division disable the manual electrical control circuit for the other LPCI division. Single electrical failures cannot disable manual electric control of the LPCI function. LPCI A has an armed manual initiation pushbutton in parallel with the automatic intiation logic which will also initiate LPCS. The LPCI B and C systems have an armed manual initiation pushbutton in parallel with the automatic initiation logic.

7.3.2.1.2.3.1.18 Access to Setpoint Adjustments (IEEE 279 Paragraph 4.18)

Set point adjustments for the HPCS, ADS, LPCS, and LPCI system instrument channels are accomplished at the main bistable trip unit located in the main control room and under administrative control of the operator.

The logic cabinets are access controlled to prevent unauthorized actuation. Because of these restrictions, compliance with this requirement of IEEE 279 is considered complete.

7.3.2.1.2.3.1.19 Identification of Protective Actions (IEEE 279 Paragraph 4.19)

HPCS, ADS, LPCS, LPCI: Protective actions are directly indicated and identified by annunciator operation, and sensor logic indicator lights. Either of these indications should be adequate, so this combination of annunciation and visible verification fulfills the requirements of this criterion. Specific ADS protective actions so indicated are:

(1) ADS 105-second time delay initiated (either one of two),

(2) ADS control power failure (any normal supply deenergized),

(3) ADS logic channel energized (either one of two),

(4) High drywell pressure sealed in (any one of four),

(5) Relief valves discharge pipe high temperature (any one).

(6) Reactor vessel low water level 3

(7) LPCS/RHR permissive

(8) ADS A(B) out of service

(9) Logic or sensor malfunction or in calibration mode

(10) ADS manually inhibited (either one of two)

(11) ADS logic sealed in (any one of four)

SRV: The following SRV indications are provided:

(1) high vessel pressure (each channel);

(2) relief valve discharge pipe high temperature (any one); and

(3) low-low setpoint logic sealed in.

7.3.2.1.2.3.1.20 Information Readout (IEEE 279 Paragrapn 4.20)

HPCS: The HPCS control system is designed to provide the operator with accurate and timely information pertinent to its status. It does not introduce signals into other systems that could cause anomalous indications confusing to the operator. There are many passive as well as active elements of this energize-to-operate system which are not continuously

monitored for operability. Periodic testing is the means provided for verifying the operability of the HPCS components and, by proper selection of test periods to be compatible with the historically established reliability of the components tested, complete and timely indications are made available. Sufficient information is provided on a continuous basis so that the operator can have a high degree of confidence that the HPCS function is available and/or operating properly. See Section 7.3.1.1.1.3.12.2.

ADS: The information provided to the operator pertinent to ADS status is as follows:

(1) indications listed in Subsection 7.3.2.

(2) Logic command position lights for each valve

(3) Reactor vessel level indication in the control room

(4) Drywell pressure indication in the main control room.

From the foregoing it can be seen that change of state of any active component from its normal condition is called to the operator's attention; therefore, the indication is considered to be complete and timely. The condition of the ADS pertinent to plant safety is also considered to be adequately covered by the indications and alarms delineated above. See Section 7.3.1.

SRV: The information provided to the operator pertinent to SRV status is as follows:

(1) indicators listed in 7.3.2.1.2.3.1.19;

(2) logic command position lights for each valve; and

(3) reactor vessel pressure indications:

a. reactor vessel pressure is indicated in the main control room.

From the foregoing it can be seen that change of status of any active component from its normal condition is called to the operator's attention; therefore, the indication is considered to be complete and timely. The condition of the SRV subsystem pertient to plant safety is also considered to be adequately covered by the indications delineated above.

LPCS: Sufficient information is provided on a continuous basis so that the operator can have a high degree of confidence that the LPCS function is available and/or operating properly.

LPCI: Sufficient information is provided on a continuous basis so that the operator can have a high degree of confidence that the LPCI function is available and/or operating properly.

7.3.2.1.2.3.1.21 <u>System Repair (IEEE 279 Paragraph 4.21)</u>

The HPCS, ADS, LPCS and LPCI control systems are designed to permit repair or replacement of components.

Recognition and location of a failed component should be accomplished during periodic testing. The pulse test system will make the detection and location quickly and accurately, and

components are mounted in such a way that they can be conveniently replaced in a short time. For example, estimated replacement time for the trip units used is less than 30 minutes. Sensors which are connected to the instrument piping cannot be changed so readily, but they are required to be connected with separable screwed or bolted fittings to effectively reduce changeout time.

7.3.2.1.2.3.1.22 Identification (IEEE 279 Paragraph 4.22)

The ECCS panels for HPCS, ADS, LPCS and LPCI are identified by color coded nameplates. The nameplate shows the division to which each panel or rack is assigned. The system to which each component belongs is identified on the panels.

7.3.2.1.2.3.2 IEEE 308

Class 1E ac and dc power supply system ECCS loads are physically separated and electrically isolated into redundant load groups so that safety actions provided by redundant counterparts are not compromised. Refer to Subsection 8.3.

7.3.2.1.2.3.3 IEEE 323

See Section 3.11.

7.3.2.1.2.3.4 IEEE 336

Conformance to IEE 336-1971 (ANSI N45.2.4-1972) is discussed in conjunction with Regulatory Guide 1.30. Refer to USAR Section 1.8.

7.3.2.1.2.3.5 IEEE 338

The design of the ECCS permits periodic testing as described in Subsection 7.3.1.1.1.

7.3.2.1.2.3.6 IEEE 344

See Section 3.10.

7.3.2.1.2.3.7 IEEE 379

The Single Failure Criterion of IEEE 279 Paragraph 4.2 as further defined in IEEE 379 "Application of the Single Failure Criterion to Nuclear Power Generating Station Protection Systems" is met as described in 7.3.2.1.2.3.1.2.

7.3.2.1.2.3.8 IEEE 384

The criteria for independence of IEEE 279, Paragraph 4.6 as further defined in IEEE 384, are met as described in Subsection 7.3.2.1.2.3.1.6.

7.3.2.2 Containment and Reactor Vessel Isolation Control System (CRVICS) - Instrumentation and Controls

7.3.2.2.1 General Functional Requirements Conformance

The CRVICS is analyzed in this Subsection. This system is described in Subsection 7.3.1.1.2, and that description is used as the basis for this analysis. The safety design bases and specific regulatory requirements of this system are stated in Subsection 7.1.2.1.2. This analysis shows conformance to the requirements given in that Subsection.

The CRVICS in conjunction with other safety systems, are designed to provide timely protection against the onset and consequences of the gross release of radioactive materials from fuel and reactor coolant pressure boundaries. Chapter 15.0 identifies and evaluated postulated events that can result in gross failure of fuel and reactor coolant pressure boundaries. The consequences of such gross failures are described and evaluated. Chapter 15.0 also evaluates a gross breach in a main steamline outside the containment during operation at rated power. The evaluation shows that the main steamlines are automatically isolated in time to prevent the loss of coolant from being great enough to allow uncovering of the core. These results are true even if the longest closing time of the valve is assumed.

7.3.2.2.2 Specific Regulatory Requirements Conformance

7.3.2.2.2.1 NRC Regulatory Guides

7.3.2.2.2.1.1 Regulatory Guide 1.11

Conformance to Regulatory Guide 1.11 is discussed in Subsection 6.2.4.3.2.4.

7.3.2.2.2.1.2 Regulatory Guide 1.22

MSIV: The main steamline isolation valves, associated logic, and sensor devices may be tested from the sensor device or final actuated devices in overlapping portions as described in Section 7.3.1.1.2.11.

Other Isolation Valves:

Except for the main steamline isolation valves, all isolation valves may be tested from sensor to actuator during plant operation. The test may cause isolation of the process lines involved, but this is tolerable.

7.3.2.2.2.1.3 Regulatory Guide 1.29

All electrical and mechanical devices and circuitry between process instrumentation and protective actuators and monitoring of systems important to safety are classified as Seismic Category I.

7.3.2.2.2.1.4 Regulatory Guide 1.30

Conformance to Regulatory Guide 1.30 is discussed in conjunction with IEEE 336-1971 (ANSI N45.2.4-1972). Refer to USAR Section 1.8.

7.3.2.2.2.1.5 Regulatory Guide 1.47

MSIV and Other Isolation Valves:

Automatic or manual indication will be provided in the control room to inform the reactor operator that a system is inoperable. Status lights will be provided to indicate which part of a system is not operable. For example, the containment and reactor vessel isolation system out-of-service indicators will be activated whenever one trip unit of an input variable is in calibration. The operator may manually actuate the out-of-service indication to cover situations which cannot be automatically indicated.

The following discussion expands the explanation of conformance to Regulatory Guide 1.47 to reflect the importance of providing accurate information for the operator and reducing the possibility for the indicating equipment to adversely affect its monitored safety system.

(1) Individual indicator lights are arranged together on the control room panel to indicate what function of the system is out of service, bypassed or otherwise inoperable.

(2) These indication provisions serve to supplement administrative controls and aid the operator in assessing the availability of component and system level protective actions.

(3) All annunciator circuits are electrically isolated from the plant safety systems to prevent the possibility of adverse effects.

(4) Each indicator light is provided with dual lamps. Provision for testing is included. Periodic testing can be done when equipment associated with the indication is tested.

MSL High Radiation Monitoring:

This subsystem meets the requirements of this guide as discussed in this Section for MSIV.

7.3.2.2.2.1.6 Regulatory Guide 1.53

MSIV, Other Isolation Valves and MSL High Radiation Monitoring:

Compliance with NRC Regulatory Guide 1.53 is achieved by specifying, designing, and constructing the engineered safeguards systems to meet the single failure criterion, Section 4.2 of IEEE 279 "Criteria for Protection Systems for Nuclear Power Generating Stations," and IEEE 379 "IEEE Trial-Use Guide for the Application of the Single-Failure Criterion to Nuclear Power Generating Station Protection Systems." Redundant portions of the CRVICS are separated and isolated to ensure that a failure will not prevent protective action. Separated channels are employed, so that a fault affecting one channel will not prevent the other redundant channels from operating properly.

Facilities for testing are provided so that the equipment can be operated in various test modes to confirm that it will operate properly when required. Testing incorporates all

elements of the system under one test mode or another, including sensors, logic, actuators, and actuated equipment. The testing is performed at intervals so that there is an extremely low probability of failure in the periods between tests. During testing there are always enough channels and systems available for operation to provide proper protection.

7.3.2.2.2.1.7 Regulatory Guide 1.62

MSIV and Other Isolation Valves:

Means are provided for manual initiation of reactor isolation at the system level through the use of four armed pushbutton switches.

Operation of these switches accomplishes the initiation of all actions performed by the automatic initiation circuitry.

The amount of equipment common to initiation of both manual reactor isolation and automatic isolation is kept to a minimum through implementation of manual reactor isolation as close as practicable to the final actuating devices of the system. No single failure in the manual, automatic or common portions of the system will prevent initiation of reactor isolation by manual or automatic means.

Manual initiation of reactor isolation, once initiated, goes to completion as required by IEEE 279 Section 4.16.

7.3.2.2.2.1.8 Regulatory Guide 1.63

Conformance to Regulatory Guide 1.63 is discussed in Section 8.1.6.1.12.

7.3.2.2.2.1.9 Regulatory Guide 1.73

Conformance to Regulatory Guide 1.73 is discussed in Subsection 8.1.

7.3.2.2.2.1.10 Regulatory Guide 1.75

Physical independence of electric systems of the Nuclear Steam Supply Shutoff System is provided by separation and isolation of redundant portions of the CRVICS, including sensors, wiring, logic devices, and actuating equipment. Signals between redundant Class 1E divisions and between Class 1E and non-Class 1E circuits are electrically isolated or physically separated to preclude a credible single failure from preventing the safety function.

7.3.2.2.2.1.11 Regulatory Guide 1.89

The qualification of Class I equipment for the CRVICS System is covered by Subsection 3.11.

7.3.2.2.2.1.12 Regulatory Guide 1.97

See Subsection 7.1.2.6.23 for discussion of the degree of conformance.

7.3.2.2.2.1.13 Regulatory Guide 1.100

See Section 3.10 for discussion of the degree of conformance.

7.3.2.2.2.1.14 Regulatory Guide 1.105

See Subsection 7.1.2.6.25 for discussion of the degree of conformance.

7.3.2.2.2.1.15 Regulatory Guide 1.118

See Subsection 7.1.2.6.26 for discussion of the degree of conformance.

7.3.2.2.2.2 Conformance to 10 CFR 50 Appendix A

(1) Criterion 10

Appropriate margin has been provided to assure that specified acceptable fuel design limits are not exceeded. (See the CPS Technical Specifications.)

(2) Criterion 13

MSIV and Other Isolation Valves:

The integrity of the reactor core and the reactor coolant pressure boundary is assured by monitoring the appropriate plant variables and automatically closing various isolation valves if the variables exceed predetermined values.

MSL High Radiation Monitoring:

These monitors conform to criterion 13 in that the instruments employed more than adequately cover the anticipated range of radiation under normal operating conditions with sufficient margin to include postulated accident conditions.

(3) Criterion 19

MSIV and Other Isolation Valves:

Controls and instrumentation are provided in the control room.

(4) Criterion 20

MSIV and Other Isolation Valves:

The Containment and Reactor Vessel Isolation Control System automatically isolates the appropriate process lines. No operator action is required to effect an isolation.

MSL High Radiation Monitoring:

The monitoring conforms to criterion 20 in that activation of the trip circuits will result in indication and, depending upon the specific trip, a trip signal being sent to the reactor protection system.

(5) Criterion 21

MSIV, Other Isolation Valves, and MSL High Radiation Monitoring:

Redundancy is designed in by the system logic structure. Redundant portions of CRVICS are separated. Signals between redundant Class 1E divisions and Class 1E and non-Class 1E circuits are isolated so that no single failure can prevent protective action. Inservice test ability of the entire system is possible in overlapping portions.

(6) Criterion 22

MSIV and Other Isolation Valves:

Redundant divisions are physically separated so that no single failure can prevent an isolation. Functional diversity of sensed variables is utilized.

MSL High Radiation Monitoring:

These monitors conform to criterion 22 in that the effects of natural phenomena and normal operation (including testing) will not result in the loss of protection.

(7) Criterion 23

MSIV and Other Isolation Valves:

The system logic and actuator signals are failsafe. The motor operated valves will fail as is on loss of power.

MSL High Radiation Monitoring:

This subsystem conforms to criterion 23 in that the trip circuits associated with each channel have been designed to specifically fail-safe in the event of loss of power.

(8) Criterion 24

MSIV, Other Isolation Valves and MSL High Radiation Monitoring:

The system has no control functions. The equipment is physically separated from the control system equipment to the extent that no single failure in the control system can prevent isolation.

(9) Criterion 29

MSIV, Other Isolation Valves and MSL High Radiation Monitoring:

No anticipated operational occurrence will prevent this equipment from performing its safety function.

(10) Criterion 34

Isolation signals are provided for the shutdown cooling subsystem of the RHR System.

(11) Criterion 64

MSL High Radiation Monitoring:

Continuous radiation monitoring is provided for the MSIV discharge path under all reactor conditions.

7.3.2.2.2.3 Industry Codes and Standards

7.3.2.2.2.3.1 IEEE 279

7.3.2.2.2.3.1.1 General Functional Requirement (IEEE 279 Paragraph 4.1)

CRVICS:

The CRVICS initiates automatic closure of specific isolation valves from trip signals generated by specified process variables and maintains the valves in a closed position without further application of power until such time as a manual reset is permissible.

The control system from each sensor to final control signal to the valve actuator, is capable of initiating appropriate action. The control initiation time is significantly lower than the minimum required valve closure time. Speed of the sensors and valve actuators are chosen to be compatible with the isolation function considered.

Accuracies of each of the sensing elements are sufficient to accomplish the isolation initiation within required limits without interfering with normal plant operation.

The reliability of the isolation control system is compatible with the reliability of the actuated equipment (valves).

The CRVICS equipment is designed for the full range of environmental conditions enumerated as follows:

(1) Power supply Voltage

Tolerance exists to any degree of power supply failure in one motive power system or one control power system.

(2) Power Supply Frequency

Tolerance exists to any degree of power supply failure in one power system or one control power system.

(3) Temperature

System operates within required time limit at all temperatures that can result from an accident.

(4) Humidity

System operates within required time limit at humidities (steam) that can result from a loss of coolant accident.

(5) Pressure

System operates at all pressures resulting from LOCA as required.

(6) Vibration

Tolerance to conditions stated in Section 3.10.

(7) Malfunctions

System is tolerant to any single component malfunction in any mode.

(8) Accidents

Tolerance exists for any design basis accident without malfunction of either subsystem.

(9) Fire

System is tolerant to any single raceway fire, or fire within a single enclosure.

(10) Explosion

Explosions are not defined in design bases.

(11) Missiles

System has tolerances to any single missile destroying no more than one pipe, raceway, or cabinet.

(12) Lightning

Tolerance to lightning damage is limited to one auxiliary bus system.

(13) Flood

All control equipment is located above flood level by design.

(14) Earthquake

Tolerance to conditions stated in Section 3.10.

(15) Wind and Tornado

Seismic Class 1 buildings house all isolated control equipment. The buildings are built to withstand high winds. (See subsection 7.3.1.2.8.)

(16) System response time

Responses are within the requirements of need to initiate CRVICS.

(17) System accuracies

Accuracies are within that needed for correct timely action.

(18) Abnormal ranges of sensed variables

Sensors are not subject to saturation when overranged.

7.3.2.2.2.3.1.2 Single Failure Criterion (IEEE 279 Paragraph 4.2)

CRVICS:

Tolerance to the following single failures has been incorporated into the control system design and installation by means of logic redundancy, physical separation of redundant portions of the system, and isolation between redundant safety circuits:

(1) Single open circuit,

(2) Single short circuit,

(3) Single logic gate failure to turn on,

(4) Single logic gate failure to turn off.

(5) Single module failure (including multiple shorts, opens and grounds),

(6) Single control cabinet bay destruction (including multiple shorts, opens and grounds),

(7) Single instrument panel destruction (including multiple shorts, opens and grounds),

(8) Single raceway destruction (including multiple shorts, opens and grounds),

(9) Single control power supply failure (any mode),

(10) Single motive power supply failure (any mode),

(11) Single control circuit failure,

(12) Single sensing line (pipe) failure, and

(13) Single electrical component failure.

7.3.2.2.2.3.1.3 Quality of Components and Modules (IEEE 279 Paragraph 4.3)

CRVICS:

Components used in the isolation system have been carefully selected on the basis of suitability for the specific application. All of the sensors and logic devices are of the same types used in the RPS. Ratings have been selected with sufficient conservatism to ensure against significant deterioration during anticipated duty over the lifetime of the plant.

Furthermore, a quality control and assurance program is required to be implemented and documented by equipment vendors to comply with the requirements set forth in 10CFR50, Appendix B. Minimum maintenance has been assumed to have been achieved if components can be reasonably expected to last 40 years or more without wearing out or failing under their maximum anticipated duty cycle (including testing).

7.3.2.2.2.3.1.4 Equipment Qualification (IEEE 279 Paragraph 4.4)

CRVICS:

No sensor components of the isolation system are required to operate in the drywell environment with the exception of the condensing chambers. All other sensory equipment is located outside the drywell and is capable of accurate operation with wider swings in ambient temperature than results from normal or abnormal (loss of ventilation and loss-of-coolant accident) conditions. Reactor vessel level sensors are of the same type as for the RPS and meet the same standards. Drywell high pressure sensors are of the same type used for the RPS and meet the same standards. On the component and module level, qualification tests will be conducted to qualify the items for these application and expected operational environments (see Sections 3.10 and 3.11).

7.3.2.2.2.3.1.5 Channel Integrity (IEEE 279 Paragraph 4.5)

CRVICS:

The isolation system is designed to tolerate the spectrum of conditions listed under the general requirements and the single failure criterion defined in IEEE 379. It therefore satisfies the channel integrity objective of this Paragraph.

7.3.2.2.2.3.1.6 Channel Independence (IEEE 279 Paragraph 4.6)

The redundant divisions of this protective function are physically separated to meet this design requirement.

Channel independence for sensors exposed to each process variable is provided by mechanical separation. Physical separation is maintained between redundant elements of the CRVICS.

7.3.2.2.2.3.1.7 Control and Protection Interaction (IEEE 279 Paragraph 4.7)

CRVICS:

(1) Classifications of Equipment - There is no control function in the system; it is strictly a protection system.

(2) Isolation Devices - There are no transmissions of signals from this protection system equipment to control system equipment. Therefore, no isolation is required.

(3) Single Random Failure. No single random failure of a control system or multiple failures resulting from a single event can prevent the isolation safety function. See Chapter 15.

7.3.2.2.2.3.1.8 Derivation of System Inputs (IEEE 279 Paragraph 4.8)

CRVICS:

The inputs which initiate isolation valve closure are direct measures of conditions that indicate a need for isolation, viz., reactor vessel low level, drywell high pressure, and pipe break detection. Pipe break detection is effected by measuring main steam line high flow and main steam line space high temperature to detect loss of coolant rather than detecting actual physical damage in the pipe itself.

7.3.2.2.2.3.1.9 Capability for Sensor Checks (IEEE 279 Paragraph 4.9)

CRVICS:

The reactor vessel instruments can be checked by cross comparing instrument channels or one at a time by application of simulated signals. These include level, pressure, and flow. During operation, radiation sensors may be cross-checked. During shutdown, they may be bench calibrated. Temperature sensors used in leak detection are cross-checked in a manner similar to radiation sensors. Also, since the thermocouples are the duel-element type, each element may be compared with its mate (see Subsection 7.3.1.1.2.4.1.3.1).

7.3.2.2.2.3.1.10 Capability for Test and Calibration (IEEE 279 Paragraph 4.10)

CRVICS:

All active components of the CRVICS can be tested and calibrated during plant operation. Pressure, level, and flow transmitter channels can be cross-checked or valved out of service for calibration against a pressure source. The radiation and temperature sensors can be cross-checked for verification of operability, and they do not require actual calibration on a frequent basis. The logic is tested by automatic pulse testing. The sixth test, the Automatic Pulse Test (APT), discussed in RPS Testability 7.2.1.1.4.8 is also applicable here for CRVICS.

7.3.2.2.2.3.1.11 Channel Bypass or Removal from Operation (IEEE 279 Paragraph 4.11)

CRVICS:

Valving out of a sensor for calibration will be indicated by manual actuation of the out-of-service indicator. A trip module in calibration will cause automatic actuation of the out-of-service indicator. Calibration of either the transmitter or trip module will cause a channel and logic trip, but not a protective action.

Closure of the motor-operated valves can be prevented by shutting off electric power to the motor starters. This action will be indicated in the main room by valve position indication lights going out. Both indication lights are deenergized because their power supply is taken from the same circuit as the valve motor starter.

7.3.2.2.2.3.1.12 Operating Bypasses (IEEE 279 Paragraph 4.12)

CRVICS:

The isolation valve control system has two bypasses. One is the main steam line low pressure bypass which is imposed by means of the mode switch in the other-than-run mode. The mode switch cannot be left in this position above approximately 15% of rated power without initiating a neutron flux scram. Therefore, the bypass is removed by the normal reactor operating sequence in accordance with the intent of IEEE 279, although it is a manual action that removes it rather than an automatic one.

The low condenser vacuum bypass is imposed by means of a manual bypass switch. Bypass removal is accomplished manually by placing the bypass switch in the automatic position. Hence, the bypass is considered an operating bypass in accordance with IEEE 279.

7.3.2.2.2.3.1.13 Indication of Bypasses (IEEE 279 Paragraph 4.13)

CRVICS:

The mode switch bypass of the main steam line low pressure isolation signal is not indicated directly in the control room. The bypass of the low condenser vacuum is directly indicated in the main control room.

Instrument bypasses for calibration and certain other bypass conditions cannot be automatically indicated. These can be manually indicated by the operator.

7.3.2.2.2.3.1.14 Access to Means for Bypassing (IEEE 279 Paragraph 4.14)

CRVICS:

The mode switch and condenser vacuum bypass switches are the only bypass switches affecting the CRVICS. They are centrally located on the operators main control console and reactor core cooling benchboard, respectively, and are key operated.

7.3.2.2.2.3.1.15 Multiple Setpoints (IEEE 279 Paragraph 4.15)

Paragraph 4.15 of IEEE 279 is not applicable because all setpoints are fixed.

7.3.2.2.2.3.1.16 Completion of Protection Action Once Initiated (IEEE 279), Paragraph 4.16)

CRVICS:

All isolation actions are sealed in by logic, so valves go to the closed position completing the protective action. Manual reset action is provided by reset switches, so that inboard valves will be reset independent of outboard valves. This feature is incorporated only to augment the electrical separation of the inboard and outboard valves and not for any need to reset them separately.

7.3.2.2.2.3.1.17 Manual Action (IEEE 279 Paragraph 4.17)

CRVICS:

The CRVICS has four divisionally separated manual initiation switches which will separately activate the four MSLIV logic divisions and initiate the isolation system at the system level.

The logic for manual initiation is one-out-of-two-twice for the main steam line isolation valves and one-out of-two for the other isolation valves. The manual initiation circuits are redundant, separated, testable during power operation, and meet the single failure criterion.

The separation of devices is maintained in both the manual and automatic portion of the system so that no single failure in either the manual or automatic portions can prevent an isolation by either manual or automatic means.

7.3.2.2.2.3.1.18 Access to Setpoint Adjustments (IEEE 279 Paragraph 4.18)

CRVICS:

Setpoint adjustments for the CRVICS system sensors are integral with the trip unit located in the main control room; therefore access is under administrative control.

7.3.2.2.2.3.1.19 Identification of Protective Actions (IEEE 279 Paragraph 4.19)

CRVICS:

Any one of the instrument channels actuates an annunciator, so that no single channel "trip" will go unnoticed. In addition, indicator lights are provided to show trip unit trip.

7.3.2.2.2.3.1.20 Information Readout (IEEE 279 Paragraph 4.20)

CRVICS:

The information presented to the reactor operator by CRVICS is as follows:

(1) Each process variable which has reached a trip point initiates trip unit status lights to identify the tripped channel

(2) System level annunciation of out-of-service conditions with status lights to inform the operator of the specific out-of-service condition.

(3) Indication of steam leaks in each of the systems monitored, viz., main steam, cleanup, and RHR

(4) Open and closed position indicator lights for each isolation valve

(5) Supplementary computer readout of trips on main steam line tunnel temperature or main steam line excess flow

7.3.2.2.2.3.1.21 System Repair (IEEE 279, Paragraph 4.21)

CRVICS

Those components which are expected to have a moderate need for replacement are designed for convenient removal. This includes the temperature signal amplifier units and thermocouples. The amplifier units are of the circuit card or replaceable module type construction and the temperature sensors are replaceable units. Pressure sensors, vessel level sensors, and radiation sensors can be replaced in a reasonable length of time. These devices are considered to be permanently installed although they have nonwelded connections at the instrument, which will allow replacement. All devices in the system can be reasonably expected to last forty years without failure, with the duty cycle expected to be imposed, including testing. However, failures can be detected during periodic testing and replacement time will be nominal.

The main steam tunnel temperature sensors are not accessible during normal plant operation because of radiation from the main steam lines. However, duel element sensors are wired out to accessible locations, thus permitting substitution for a failed sensor during operation. The failed sensor can be replaced during shutdown.

7.3.2.2.2.3.1.22 Identification of Protection Systems (IEEE 279 Paragraph 4.22)

CRVICS:

Cabinets and panels which house the divisionally separated isolation system equipment are identified by a distinctive color marker plate listing the system name and designation of the separation division of the system. Cables, conduits and raceways are color coded by division.

7.3.2.2.2.3.2 Conformance to IEEE 308

Class 1E ac power supply systems are physically separated and electrically isolated into redundant load groups so that safety actions provided by redundant counterparts are not compromised. See Subsection 8.3.

7.3.2.2.2.3.3 Conformance to IEEE 317

Conformance to IEEE 317 is discussed in conjunction with Regulatory Guide 1.63 in Subsection 8.1.6.1.12.

7.3.2.2.2.3.4 Conformance to IEEE 323

The components of the CRVICS are covered by Subsection 7.1.2.5.4.

7.3.2.2.2.3.5 Conformance to IEEE 336

Conformance to IEEE 336-1971 (ANSI N45.2.4-1972) is discussed in conjunction with Regulatory Guide 1.30. Refer to USAR Section 1.8.

7.3.2.2.2.3.6 Conformance to IEEE 338

The system is completely testable in overlapping segments during reactor operation. Tests will check the sensors through to the final actuators and demonstrate independence of channels and detect failures.

7.3.2.2.2.3.7 Conformance to IEEE 344

The seismic qualification of components of CRVICS is covered in Section 3.10.

7.3.2.2.2.3.8 Conformance to IEEE 379

The single failure criterion of IEEE 279 as defined by IEEE 379 is fully complied with in the design of the CRVICS.

The logic structure defines system redundance and redundant portions of the system are separated to preclude a credible single failure. Signals between redundant Class 1E circuits and between Class 1E and non-Class IE circuits are isolated to prevent interaction with non-Class 1E circuits. Also, wiring carrying ESF power is short-circuit separated from nonessential power wiring to preclude a single failure from propagating to redundant ESF power supplies.

7.3.2.2.2.3.9 Conformance to IEEE 384

Conformance with this standard is covered by compliance with Regulatory Guide 1.75 as discussed in Subsection 7.3.2.2.2.1.10.

7.3.2.3 Main Steam Isolation Valve-Leakage Control System - (MSIV-LCS) - Instrumentation and Controls

Note: As a result of the re-analysis of the Loss of Coolant Accident (LOCA) using Alternative Source Term (AST) Methodology, it is no longer necessary to credit the Main Steam Isolation Valve Leakage Control System (MSIVLCS) for post-LOCA activity leakage mitigation. The system has been left in place as a passive system and is not required to perform any safety function.

This page left blank intentionally

This page left blank intentionally

This page left blank intentionally

This page left blank intentionally

This page left blank intentionally

7.3.2.4 Containment Spray Cooling Mode (RHR) – Instrumentation and Controls

7.3.2.4.1 General Functional Requirement Conformance

When the RHR system is in the containment spray cooling mode, the pumps take suction from the suppression pool, pass it through the RHR heat exchangers, and inject it into the containment atmosphere.

In the event that containment pressure exceeds a predetermined limit, after a predetermined interval following a LOCA, the RHR system flow will be automatically diverted to containment spray headers (Containment Spray Cooling Mode of RHR). The flow of the RHR pump will pass through the containment spray nozzles to quench any steam and cool non-condensibles in the containment atmosphere.

7.3.2.4.2 Specific Regulatory Requirements Conformance

7.3.2.4.2.1 Regulatory Guides Conformance

7.3.2.4.2.1.1 Regulatory Guide 1.6

Conformance to this regulatory guide is achieved by dividing the containment spray cooling electric power loads into Division 1 (Containment Spray Cooling A) and Division 2 (Containment Spray Cooling B) so that loss of any one division will not prevent the minimum safety functions from being performed. No inter-connections exist which can compromise redundant power sources.

7.3.2.4.2.1.2 Regulatory Guide 1.11

Conformance to Regulatory Guide 1.11 is discussed in Subsection 6.2.4.

7.3.2.4.2.1.3 Regulatory Guide 1.22

Conformance to this regulatory guide is achieved by providing system and component testing capability, either during reactor power operation or shutdown.

7.3.2.4.2.1.4 Regulatory Guide 1.29

All electrical and mechanical devices and circuitry between process instrumentation and protective actuators and monitoring of systems important to safety are classified as Seismic Category I, and is covered under Section 3.10.

7.3.2.4.2.1.5 Regulatory Guide 1.30

The quality assurance requirements of IEEE 336 are applicable during the plant design and construction phases (see Section 7.1) and will also be implemented as an operational QA program during plant operation in response to Regulatory Guide 1.30. Conformance to Regulatory Guide 1.30 is discussed in conjunction with IEEE 336-1971 (ANSI N45.2.4-1972). Refer to USAR Section 1.8.

7.3.2.4.2.1.6 Regulatory Guide 1.32

Conformance is described in the conformance to General Design Criterion 17 (see Subsection 7.3.2.1.2.1.6) and IEEE 308.

7.3.2.4.2.1.7 Regulatory Guide 1.47

Indication and annunciation is provided in the main control room to inform the operator that a system or part of a system is inoperable. See Subsection 7.1.2.6.11 for a discussion of the bypass indication capability provided.

7.3.2.4.2.1.8 Regulatory Guide 1.53

The system is designed with two independent and redundant logics to assure that no single failure can prevent the safety function.

7.3.2.4.2.1.9 Regulatory Guide 1.62

System initiation is manual from the main control room. Interlocks are provided to prevent inadvertent manual initiation during normal reactor power operation. The manual controls are easily accessible to the operator so that action can be taken in an expeditious manner. Operation of the manual initiation accomplishes all of the actions performed by the automatic initiation circuitry.

No single failure in the manual, automatic or common portion of the protection system will prevent initiation by manual means. Manual initiation, once initiated, goes to completion as required by IEEE 279, Section 4.16 unless overridden by a higher priority safety function, such as LPCI mode.

7.3.2.4.2.1.10 Regulatory Guide 1.63

Conformance to Regulatory Guide 1.63 is discussed in Subsection 8.1.6.1.12.

7.3.2.4.2.1.11 Regulatory Guide 1.73

Conformance to Regulatory Guide 1.73 is discussed in Subsection 8.1.

7.3.2.4.2.1.12 Regulatory Guide 1.75

Physical independence of electrical systems is provided by separation and isolation of redundant portions of the system, including sensors, wiring, logic devices, and actuating equipment. Signals between redundant Class 1E divisions and between Class 1E and non-Class 1E circuits are electrically and physically isolated to preclude a credible single failure from preventing the safety function. In addition, short circuit separation between wires carrying essential and non-essential power is provided within a division by grounded metallic conduit. This prevents a single short-circuit failure from propagating to redundant power supplies.

7.3.2.4.2.1.13 Regulatory Guide 1.89

A discussion of the degree of conformance is contained in Section 3.11.

7.3.2.4.2.2 Conformance to 10 CFR 50, Appendix A, General Design Criteria

(1) Criterion 13: Instrumentation and Control - Instrumentation is provided to monitor variables and systems over their anticipated ranges for normal operation, anticipated operational occurrences, and accident conditions to assure adequate safety.

(2) Criterion 20: Protection System Functions - Sensors are provided which sense accident conditions and initiate the Containment Spray Cooling System as described in Subsection 7.3.1.1.4.4.

(3) Criterion 21: Protection System Reliability and Testability - Functional reliability of the Containment Spray Cooling System is assured by compliance with the requirements of IEEE standard 279 as described in subsection 7.3.1.2 and 7.3.2.4.3.1. Testing is in compliance with IEEE standard 338 as described in subsection 7.3.2.4.3.6.

(4) Criterion 22: Protection System Independence - Independence of the Containment Spray Cooling System is assured by design which includes redundancy in subsection 7.3.1.1.4.7.

(5) Criterion 23: Protection System Failure Modes - A single failure in a division of system logic is acceptable because a redundant division of equipment is available to fulfill the required safety action. The motor operated valves fail "as-is" on loss of power.

(6) Criterion 24: Separation of Protection and Control Systems - The Containment Spray Cooling System is separated from control systems to the extent that failure of any single control system component or channel, or failure or removal from service of any single protection system component or channel which is common to both, leaves intact a system satisfying all reliability, redundancy, and independence requirements of the protection system.

(7) Criterion 34: Residual Heat Removal - A system is provided to remove reactor residual heat to assure that the specified acceptable fuel design limits are not exceeded.

(8) Criterion 38: Containment Heat Removal - The containment spray cooling mode (RHR) conforms with the criterion for containment heat removal. It performs the safety function of rapidly reducing containment pressure and temperature by condensing any steam in the containment atmosphere outside the drywell, following a loss-of coolant accident (LOCA). Heat is removed from the containment, while the water drawn from the containment suppression pool passes through the RHR heat exchangers before being injected into the containment atmosphere. The independence and redundancy of the two loops, RHR-A and RHR-B, including the equipment used in the containment spray mode, are discussed in Subsections 7.3.1.1.1.6 and 7.3.1.1.4.

(9) Criterion 40: Testing of Containment Heat Removal System - Conformance to the testability requirements of this criterion by the containment spray (RHR) is discussed in Subsections 7.3.2.4.3.1.9 and 7.3.2.4.3.1.10. Testability of the

RHR-A and RHR-B loops, including the equipment used in the containment spray mode, is discussed in Subsection 7.3.1.1.1.6.

7.3.2.4.3 Conformance to Industry Codes and Standards

7.3.2.4.3.1 IEEE 279

7.3.2.4.3.1.1 General Functional Requirement (IEEE 279 Paragraph 4.1)

AUTO-INITIATION

(1) Appropriate Action:

Appropriate action for the containment spray mode is defined as activating equipment for introducing water into the containment spray discharge valves.

(2) Precision

The sensory equipment will positively initiate action before process variables go beyond precisely established limits.

(3) Reliability

Reliability of the control system is compatible with the controlled equipment.

(4) Over Full Range of Environmental Conditions

a. Power Supply Voltage

Tolerance is provided to any degree of ac power supply voltage fluctuation within one division such that voltage regulation failures in one division cannot negate successful low pressure core cooling. DC power supply failure will likewise affect only one of the two containment spray divisions. Power supply tolerance to voltage fluctuation within a division is discussed in Licensing Topical Report NEDO-21617-A.

b. Power Supply Frequency

Same as (4)a. above. Excessive frequency reduction is indicative of an onsite power supply failure, and equipment shutdown in that division is required.

c. Temperature

Operable at all temperatures that can result from any design basis loss-of-coolant (LOCA) accident.

d. Humidity

Operable at humidities (steam) that can result from LOCA.

e. Pressure

Operable at all pressures resulting from a LOCA as required.

f. Vibration

Tolerance to conditions stated in Section 3.10.

g. Malfunctions

Tolerance to any single component failure to operate on command.

h. Accidents

Tolerance to all design basis accidents without malfunction.

i. Fire

Tolerance to a single raceway or enclosure fire or mechanical damage.

j. Explosion

Explosions not defined in design basis.

k. Missiles

Tolerance to any single missile destroying no more than one pipe, raceway, or electrical enclosure.

l. Lightning

Tolerance to lightning damage limited to one auxiliary bus system. See comments under (4)a above.

m. Flood

All control equipment is located above flood level by design or protected against flooding.

n. Earthquake

Tolerance to conditions stated in Section 3.10.

o. Wind

Seismic Class I building houses all control equipment. The building is built to withstand high winds (see 7.3.1.2.8).

p. System Response Time

Responses are within the requirements of the need to start containment spray.

q. System Accuracies

Accuracies are within that needed for correct timely action.

r. Abnormal Ranges of Sensed Variables

Sensors do not saturate when overranged.

7.3.2.4.3.1.2 Single-Failure Criterion (IEEE 279 Paragraph 4.2)

Redundancy in equipment and control logic circuitry is provided so that it is not possible that the complete containment spray mode can be rendered inoperative using single failure criteria.

Two division logics are provided. Division 1 logic is provided to initiate loop A equipment and Division 2 logic is provided to initiate loop B equipment.

Tolerance to single failures in accordance with IEEE 379 is provided in the sensing channels, trip logic, actuator logic, and actuated equipment so that a single failure will be limited to the possible disabling of only one loop.

7.3.2.4.3.1.3 Quality Components (IEEE 279 Paragraph 4.3)

Components used in the containment spray mode have been carefully selected on the basis of suitable conservatism to ensure against significant deterioration during anticipated duty over the lifetime of the plant as illustrated below:

(1) Controls are energized to operate and have brief and infrequent duty cycles.

(2) Motor starters and circuit breakers are effectively derated for motor starting applications since their nameplate ratings are based on short-circuit interruption capabilities as well as on continuous current carrying capabilities. Short-circuit current-interrupting capabilities are many times the starting current for the motors being started.

(3) Normal motor starting equipment ratings include allowance for a much greater number of operating cycles than the emergency core cooling application will demand, including testing.

(4) Instrumentation and controls are rated for application in the normal, abnormal, and accident environments in which they are located.

(5) Panel mounted components are subjected to the manufacturers' normal quality control and undergo functional testing on the panel assembly floor as part of the integrated module test prior to shipment of each panel assembly. Only components which have demonstrated a high degree of reliability and serviceability in other functionally similar applications, or qualified by tests, are selected for use.

Furthermore a quality assurance program is required to be implemented and documented by equipment vendors, with the intent of complying with the requirements set forth in 10CFR50, Appendix B.

7.3.2.4.3.1.4 Equipment Qualification (IEEE 279 Paragraph 4.4)

No components of the containment spray mode are required to operate in the drywell environment. All sensory equipment is located outside the drywell but inside the containment and is capable of accurate operation with wider variations in ambient temperature than results from normal or abnormal (loss-of-ventilation and loss-of-coolant accident) conditions.

7.3.2.4.3.1.5 Channel Integrity (IEEE 279 Paragraph 4.5)

The containment spray mode instrument channels (low water level or high drywell pressure or high containment pressure) are designed to satisfy the channel integrity objective.

7.3.2.4.3.1.6 Channel Independence (IEEE 279 Paragraph 4.6)

Channel independence of the sensors for each variable is provided by electrical isolation and mechanical separation. The A and E sensors for reactor vessel low water levels, for instance, are located on one local instrument panel that is identified as Division 1 equipment, and the B and F sensors are located on a second instrument panel, widely separated from the first and identified as Division 2 equipment. The A and E sensors have a common process tap, which is widely separated from the corresponding tap for sensors B and F. Disabling of one or all sensors in one location does not disable the control for the other division.

Logic cabinets for Division 1 are in a separate physical location from those of Division 2, and each division is complete in itself, with its own Class 1E battery control and instrument bus, power distribution buses, and motor control centers. The divisional split is carried all the way from the process taps to the final actuated equipment, and includes both control and motive power supplies.

7.3.2.4.3.1.7 Control and Protection Interaction (IEEE 279 Paragraph 4.7)

The containment spray mode is a safety system designed to be independent of plant control systems. Annunciator circuits receiving outputs from the system cannot impair the operability of the system control because of electrical isolation.

7.3.2.4.3.1.8 Derivation of System Inputs (IEEE 279 Paragraph 4.8)

The inputs which are permissive for the containment spray mode are direct measures of the variables that indicate need for containment cooling. Drywell and containment high pressure is sensed by pressure transmitters. Reactor vessel level is sensed by vessel water level transmitters.

7.3.2.4.3.1.9 Capability for Sensor Checks (IEEE 279 Paragraph 4.9)

The reactor vessel level, drywell high pressure and containment high pressure transmitter can be checked for operability by valving out each transmitter and applying a test pressure source. This verifies the operability of the sensors as well as the calibration range. The trip units mounted in the main control room are calibrated separately by introducing a calibration source and verifying the set point through the use of a digital readout on the trip calibration module.

7.3.2.4.3.1.10 Capability for Test and Calibration (IEEE 279 Paragraph 4.10)

The containment spray mode is capable of being completely tested during normal plant operation to verify that each element of the system, active or passive, is capable of performing its intended function. Motor-operated valves can be exercised by the appropriate control logic and starters, and all indications and annunciations can be observed as the system is tested.

The instrument channel trip set point may be tested by introducing a test signal of sufficient magnitude to trip the instrument channel trip device. The change of state of the trip device may be observed by visual inspection of the trip device output indicator light on the logic cabinet (see NEDO-21617-A).

Calibration of the mechanical portion of the sensing elements may be performed when the plant is shut down. The transmitter must be valved such that a test pressure can be applied.

7.3.2.4.3.1.11 Channel Bypass or Removal from Operation (IEEE 279 Paragraph 4.11)

Calibration of each sensor will introduce a single instrument channel trip. This does not cause a protective function without coincident operation of a second channel.

Removal of a sensor from operation during calibration does not prevent the redundant instrument channel from functioning if accident conditions occur.

7.3.2.4.3.1.12 Operating Bypasses (IEEE 279 Paragraph 4.12)

Containment spray has no operating bypasses.

7.3.2.4.3.1.13 Indication of Bypasses (IEEE 279 Paragraph 4.13)

See Subsection 7.3.1.1.4.6.

7.3.2.4.3.1.14 Access to Means for Bypassing (IEEE 279 Paragraph 4.14)

Access to switchgear and motor control centers is procedurally controlled by lockable breaker control switch handles in the motor control centers.

7.3.2.4.3.1.15 Multiple Trip Settings (IEEE 279 Paragraph 4.15)

There are no multiple trip settings.

7.3.2.4.3.1.16 Completion of Protection Action Once it is Initiated (IEEE 279 Paragraph 4.16)

The final control elements for the containment spray system are essentially bi-stable, i.e., pump breakers stay closed without control power, and motor-operated valves stay open once they have reached their open position, even though the motor starter may drop out (which will occur when the valve open limit switch is reached).

Thus, protective action once initiated will go to completion or continue until terminated by deliberate operator action.

If RHR A or B is operating in containment spray mode and there is a subsequent LOOP, manual restart of containment spray will be required.

Automatic restarting of containment spray following a LOOP is not required because this scenario would require the LOOP to occur greater then 10 minutes following a LOCA. This is beyond the design basis for the plant.

7.3.2.4.3.1.17 Manual Actuation (IEEE 279 Paragraph 4.17)

In no event can failure of an automatic control circuit for equipment in one division disable the manual electrical control circuit for the other containment spray division. Single electrical failures cannot disable manual control of the containment spray function.

Both containment spray A and B have manual initiation switches in parallel with the automatic initiation logic output circuits.

7.3.2.4.3.1.18 Access to Set Point Adjustment (IEEE 279 Paragraph 4.18)

Set point adjustments for the containment spray mode trips are accomplished at the bi-stable trip unit located in the main control room and are therefore under administrative control of the operator. The logic cabinets are locked to prevent unauthorized actuation.

Because of these restrictions, compliance with this requirement of IEEE 279 is considered complete.

7.3.2.4.3.1.19 Identification of Protective Actions (IEEE 279 Paragraph 4.19)

Protective actions are directly indicated and identified by annunciator operation, and instrument channel indicator lights. Because either of these indications should be adequate, this combination of annunciation and visible verification fulfills the requirements of this criterion.

7.3.2.4.3.1.20 Information Readout (IEEE 279 Paragraph 4.20)

Sufficient information is provided on a continuous basis so that the operator can have a high degree of confidence that the containment spray function is available and/or operating properly.

7.3.2.4.3.1.21 System Repair (IEEE 279 Paragraph 4.21)

The containment spray mode is designed to permit repair or replacement of components.

All devices in the system are designed for a 40-year lifetime under the imposed duty cycles with periodic maintenance. Since this duty cycle is composed mainly of periodic testing rather than operation, lifetime is more a matter of "shelf life" than active life. However, all components are selected for continuous duty plus thousands of cycles of operation, far beyond that anticipated in actual service. The pump breakers are an exception to this with regard to the large number of operating cycles available. Nevertheless, even these breakers should not require contact replacement within 40 years, assuming periodic pump starts each 3 months.

Recognition and location of a failed component will be accomplished during periodic testing. The simplicity of the logic will make the detection and location relatively easy, and components are mounted in such a way that they can be conveniently replaced in a short time. Sensors

which are connected to the instrument piping are connected with separable screwed or bolted fittings to expedite changeout.

7.3.2.4.3.1.22 Identification (IEEE 279 Paragraph 4.22)

A colored nameplate identifies each logic cabinet and instrument panel that are part of the containment spray system. The nameplate shows the division to which each panel or cabinet is assigned, and also identifies the function in the system of each item on the control panel.

Identification of cables and raceways is discussed in Subsection 8.3.1.3.

Panels in the control room are identified by tags which indicate the system logic contained in each panel.

7.3.2.4.3.2 IEEE 308

Class 1E loads are physically separated and electrically isolated into independent load groups, including the instrumentation and controls used in the containment spray mode of the RHR system. A failure in one group will not interfere with proper operation of the redundant portions of the system. Details of the Class 1E power system are discussed in Chapter 8.

7.3.2.4.3.3 IEEE 317

See 7.1.2.5.3.

7.3.2.4.3.4 IEEE 323

Refer to Section 3.11 for a discussion of system compliance for this standard.

7.3.2.4.3.5 IEEE 336

Conformance to 1EEE 336-1971 (ANSI N45.2.4-1972) is discussed in conjunction with Regulatory Guide 1.30. Refer to USAR Section 1.8.

7.3.2.4.3.6 IEEE 338

The capability for testing the containment spray mode (RHR) instrument and control system is discussed in Subsection 7.3.2.4.3.1.9 and 7.3.2.4.3.1.10.

7.3.2.4.3.7 IEEE 344

Refer to Section 3.10 for discussion of system compliance to this standard.

7.3.2.4.3.8 IEEE 379

The single-failure criterion of IEEE 279, Paragraph 4.2 as further defined in IEEE 379, "Application of the Single-Failure Criterion to Nuclear Power Generating Station Protection System" is met as described in Subsection 7.3.2.4.3.1.2.

7.3.2.4.3.9 IEEE 384

The criteria for independence of IEEE 279 Paragraph 4.6, as further defined in IEEE 384, are met as described in Subsection 7.3.2.4.3.1.6.

7.3.2.4.3.10 IEEE 387

The diesel engine-generators of divisions 1 and 2 are applied as standby power supplies for the RHR system, including the equipment used in the containment spray mode. See subsection 7.3.2.4.3.2 for discussion of conformance to criteria for standby power supplies of IEEE 308 as amplified by IEEE 387.

7.3.2.5 Shutdown Service Water System Instrumentation and Controls

7.3.2.5.1 Conformance to General Functional Requirements

Chapter 15 "Accident Analyses," and Subsection 9.2.1, "Shutdown Service Water System," evaluate the individual and combined capabilities of the shutdown service water system.

7.3.2.5.2 Conformance to Specific Regulatory Requirements

7.3.2.5.2.1 Conformance to 10 CFR 50 Appendix A

Criterion 13 -- Instrumentation is provided to monitor the system over its normal operating range. Interlocking signals including alarms are provided for abnormal or accident conditions.

Criterion 44 -- The SSWS provides transfer of heat from systems and components. Components important to safety to the ultimate heat sink under normal and accident operating conditions. Three independent subsystems are provided to assure that the system safety function can be accomplished, assuming a single failure.

Criterion 45 -- Provisions are included to satisfy the In-Service Inspection requirements of ASME Section XI.

Criterion 46 -- Appropriate controls and instrumentation are provided to permit periodic functional testing.

7.3.2.5.2.2 Conformance to Industry Standards

7.3.2.5.2.2.1 IEEE 279, Criteria for Protection Systems for Nuclear Power Generating Stations

7.3.2.5.2.2.1.1 General Functional Requirements (IEEE 279, Paragraph 4.1)

The general functional requirements of this system are discussed in Subsection 7.3.2.5.1.

7.3.2.5.2.2.1.2 Single Failure Criterion (IEEE 279, Paragraph 4.2)

The SSWS consists of three subsystems. The three subsystems feature separate and independent sets of controls and instrumentations and meet the single failure criterion.

7.3.2.5.2.2.1.3 Quality of Components and Modules (IEEE 279, Paragraph 4.3)

Components used in the SSWS have been carefully selected on the basis of suitability for the specific application. The logic relays have been selected with conservatism to ensure against significant deterioration during anticipated duty over the lifetime of the plant.

A quality assurance program is implemented and documented by equipment vendors with the intent of complying with requirements set forth in 10 CFR 50, Appendix B.

7.3.2.5.2.2.1.4 Equipment Qualification (IEEE 279, Paragraph 4.4)

Class 1E Equipment Qualification is demonstrated by the vendors or others by type tests in accordance with the purchase specification. Where necessary, operating experience or analysis is used to supplement type tests.

7.3.2.5.2.2.1.5 Channel Integrity (IEEE 279, Paragraph 4.5)

The SSWS is designed to maintain its functional capability under the environmental conditions, electrical transients, and malfunctions that may occur in the design-basis LOCA.

7.3.2.5.2.2.1.6 Channel Independence (IEEE 279, Paragraph 4.6)

Channel independence for sensors is provided by electrical and mechanical separation. Physical separation is maintained between the subsystems to increase reliability of operation. The SSWS is sufficiently separated to give a high degree of reliability.

7.3.2.5.2.2.1.7 Control and Protection Systems Interaction (IEEE 279, Paragraph 4.7)

There is no interaction between the SSWS and the reactor protection system (RPS).

7.3.2.5.2.2.1.8 Derivation of System Inputs (IEEE 279, Paragraph 4.8)

All input signals to the instrumentation and control systems are derived from direct meansurement of system variables.

7.3.2.5.2.2.1.9 Capability of Sensor Checks (IEEE 279, Paragraph 4.9)

The sensors which are used for inputs to the SSWS can be checked one at a time by application of simulated signals during normal plant operation.

7.3.2.5.2.2.1.10 Capability of Test and Calibration (IEEE 279, Paragraph 4.10)

All active components of the SSWS can be tested during plant operation. Operation of the pumps with manual switches verifies the ability of the pumps to operate properly. Instrument setpoints are tested by simulated signals to verify the setpoints are within limits.

7.3.2.5.2.2.1.11 Channel Bypass or Removal from Operation (IEEE 279, Paragraph 4.11)

The design of the three independent subsystems permits the removal from operation of one subsystem for testing, calibration, or maintenance without affecting the ability of the other subsystems to perform their required safety functions.

7.3.2.5.2.2.1.12 Operating Bypasses (IEEE 279, Paragraph 4.12)

Not applicable to the SSWS.

7.3.2.5.2.2.1.13 Indication of Bypasses (IEEE 279, Paragraph 4.13)

When parts of the system have been deliberately made inoperative for test, calibration or maintenance, an indication of this condition is provided in the main control room.

7.3.2.5.2.2.1.14 Access to Means for Bypassing (IEEE 279, Paragraph 4.14)

Not applicable to the SSWS.

7.3.2.5.2.2.1.15 Multiple Set Points (IEEE 279, Paragraph 4.15)

There are no multiple set points in the SSWS.

7.3.2.5.2.2.1.16 Completion of Protection Action Once Initiated (IEEE 279, Paragraph 4.16)

Completion of action is assured by the control circuitry which performs an automatic transfer to the SSWS system. Return to the PSWS is prevented until the accident initiation signals are reset and operator manual action is completed.

7.3.2.5.2.2.1.17 Manual Actuation (IEEE 279, Paragraph 4.17)

The SSWS can be initiated manually, at subsystem level, from the main control room.

7.3.2.5.2.2.1.18 Access to Set Point Adjustments, Calibration,and Test Points (IEEE 279, Paragraph 4.18)

Access to setpoint adjustments, calibration points and test points are provided by administrative controls to qualified plant personnel.

7.3.2.5.2.2.1.19 Identification of Protective Actions (IEEE 279, Paragraph 4.19)

Meters and recorders located in the main control room provide indication of process variables necessary for the operator to verify the proper operation of the SSWS.

7.3.2.5.2.2.1.20 Information Read-Out (IEEE 279, Paragraph 4.20)

Meters and recorders in the main control room provide indication of process variables necessary for proper operation of the SSWS.

7.3.2.5.2.2.1.21 System Repair (IEEE 279, Paragraph 4.21)

The system is designed to provide easy recognition of malfunctioning equipment through proper test procedures. Accessibility is provided for the sensors and controls to facilitate repair or adjustment.

7.3.2.5.2.2.1.22 Identification of Protection Systems (IEEE 279, Paragraph 4.22)

Nameplates identify the electrical separation division for each instrument panel or instrument or both.

7.3.2.5.2.2.2 Compliance to IEEE 323

The Class 1E equipment qualification is demonstrated by the vendor or others by tests in accordance with the purchase specification. Where necessary, operating experience or analysis is used to supplement type tests. Qualification documentation is maintained to verify that the equipment is qualified.

7.3.2.5.2.2.3 Compliance to IEEE 338

The operability of the SSWS can be verified and credible failures are detectable through testing during normal plant operation. Each subsystem logic through the final actuators may be tested independent of the other subsystem. The input sensors and setpoints are checked by the application of simulated signals. A failure of a subsystem while testing will not prevent the subsystem from being initiated.

7.3.2.5.2.2.4 Compliance to IEEE 344

Capability of the instruments and controls to meet seismic requirements is demonstrated by the manufacturer or others. Documentation to verify that the equipment is seismically qualified is maintained.

7.3.2.5.2.2.5 Compliance to IEEE 379

See subsection 7.3.2.5.2.2.1.2.

7.3.2.6 Main Control Room HVAC System Instrumentation and Controls

7.3.2.6.1 Specific Conformance of the Instrumentation and Control to IEEE 279

7.3.2.6.1.1 General Functional Requirements (IEEE 279, Paragraph 4.1)

Instruments and controls provided for each of the control room redundant HVAC systems perform their normal safety function during all phases of station operation and during design basis events to maintain main control room habitability.

7.3.2.6.1.2 Single Failure Criterion (IEEE-279 Paragraph 4.2)

Independent instrumentation and controls are provided for each of the two redundant systems. Single failure criterion is met in that the instrumentation and controls associated with one system will not affect the safety related function of the other redundant system.

7.3.2.6.1.3 Quality of Components and Modules (IEEE 279, Paragraph 4.3)

Components used in the main control room HVAC system have been carefully selected on the basis of suitability for the specific application. The logic relays have been selected with conservatism to ensure against significant deterioration during anticipated duty over the lifetime of the plant.

A quality assurance program is required to be implemented and documented by equipment vendors with the intent of complying with the requirements set forth in 10 CFR 50, Appendix B.

7.3.2.6.1.4 Equipment Qualification (IEEE-279, Paragraph 4.4)

The nuclear safety-related instrumentation and controls for the main control room HVAC system are qualified by type test and/or analyses in conformance with the contract specification.

7.3.2.6.1.5 Channel Integrity (IEEE-279 Paragraph 4.5)

Instrumentation and controls for the control room HVAC System are qualified to maintain their functional capability under extreme conditions specified in the design environmental parameters.

7.3.2.6.1.6 Channel Independence (IEEE 279 Paragraph 4.6)

The main control room HVAC system instruments and controls channels are independent from each other. Electrical and physical separation is maintained between the instruments and controls provided for the redundant HVAC systems, and no interface exists between the control channels.

7.3.2.6.1.7 Control and Protection System Interaction (IEEE 279 Paragraph 4.7)

7.3.2.6.1.7.1 Classification of Equipment (IEEE 279 Paragraph 4.7.1)

The instruments and controls provided for the main control room HVAC system are designed such that both protective and control functions are not performed by the same control device or equipment.

7.3.2.6.1.7.2 Isolation Devices, Single Random Failure and Multiple Failures Resulting from a Credible Single Event (Paragraphs 4.7.2, 4.7.3, 4.7.4 of IEEE 279)

Does not apply based on Subsection 7.3.2.12.1.7.1.

7.3.2.6.1.8 Derivation of System Input (IEEE 279 Paragraph 4.8)

The signals for essential instruments are direct measures of desired variable parameters.

7.3.2.6.1.9 Capability for Sensor Checks (IEEE 279 Paragraph 4.9)

The sensors which are used for input to the control room HVAC system can be checked one at a time by application of simulated signals during normal plant operation.

7.3.2.6.1.10 Capability for Test and Calibration (IEEE 279 Paragraph 4.10)

The instruments and controls for the main control room HVAC system are located such that they are accessible for periodic testing and calibration without affecting the safety function of the other related instruments.

7.3.2.6.1.11 Channel Bypass or Removal from Operation (IEEE 279 Paragraph 4.11)

There are no instrument channel bypasses associated with the Control Room HVAC System. Calibration of a sensor that introduces a single instrument channel trip will not cause a protective action without the coincident trip of a second channel. The removal of a sensor from operation during calibration does not prevent the redundant instrument channel from functioning if accident conditions occur.

7.3.2.6.1.12 Operating Bypass (IEEE 279 Paragraph 4.12)

There are no operating bypasses for the Control Room HVAC System.

7.3.2.6.1.13 Indication of Bypasses (IEEE 279 Paragraph 4.13)

There are no instrumentation bypasses for the Control Room HVAC System. Off normal or trouble conditions are alarmed in the main control room.

7.3.2.6.1.14 Access to Means for Bypassing (IEEE 279 Paragraph 4.14)

There are no instrumentation bypasses for the Control Room HVAC System. Maintenance activities such as channel calibration and functional checks are procedurally controlled.

7.3.2.6.1.15 Multiple Set Points (IEEE 279 Paragraph 4.15)

The design of the main control room HVAC system control and instrumentation does not require provisions for multiple control setpoints.

7.3.2.6.1.16 Completion of Protective Action Once It Is Initiated (IEEE 279 Paragraph 4.16)

The main control room HVAC system receives signals from radiation detectors in the outside air intake. Once initiated, action takes place at system level and shall go to completion. Only deliberate operator action shall cause return to operation.

7.3.2.6.1.17 Manual Initiation (IEEE 279 Paragraph 4.17)

Manual initiation of the HVAC fans can be accomplished by operator actuation of control switch located in the main control room.

7.3.2.6.1.18 Access to Set Point Adjustments, Calibrations, and Test Points (IEEE 279 Paragraph 4.18)

Access to set point adjustments calibrations and test points are under administrative control.

7.3.2.6.1.19 Identification of Protective Action (IEEE 279 Paragraph 4.19)

Local indicating lights are provided for each of the radiation detection channels.

7.3.2.6.1.20 Information Read Out (IEEE 279 Paragraph 4.20)

Alarms and indicators are provided in the main control room and on local panels.

7.3.2.6.1.21 System Repair (IEEE 279 Paragraph 4.21)

The control room HVAC system instrumentation and controls are located to facilitate the recognition location, replacement, repair or adjustment of any malfunctioning instrument(s).

7.3.2.6.1.22 Identification (IEEE 279 Paragraph 4.22)

Nameplates identify the electrical separation division for each instrument panel or instrument or both.

7.3.2.6.2 Specific Conformance of the Instrumentation and Controls to General Design Criteria, 10 CFR 50 Appendix A

7.3.2.6.2.1 Criterion 13 - Instrumentation and Controls

Control room HVAC system instrumentation and controls for each system have been provided to monitor and maintain room temperature at a predetermined setpoint.

7.3.2.6.2.2 Criterion 19 - Control Room

The main control room HVAC system provides radiation protection for the control room to permit access and occupancy under accident conditions without personnel receiving radiation exposures in excess of 5 rem whole body or its equivalent to any part of the body for the duration of the accident.

7.3.2.6.3 Conformance to Regulatory Guide 1.47

An inoperable subsystem or the unavailability of a major component such as pumps, fans, chillers or dampers is automatically indicated and alarmed in the Control Room. Subsystem inoperable status can also be indicated and alarmed manually by operator selection.

7.3.2.7 Combustible Gas Control System

7.3.2.7.1 Conformance with General Functional Requirements

General Functional Requirements for the CGCS system are discussed in Subsection 6.2.5.1.

7.3.2.7.2 Conformance with Specific Regulatory Requirements

7.3.2.7.2.1 Conformance with 10 CFR 50 General Design Criteria

General Design Criteria, established in Appendix A of 10 CFR 50, which are generally applicable to all ECCS systems are discussed in Subsection 7.3.2.1. Those with specific impact on the CGCS are described in this Section.

Criterion 13: Instrumentation Control

The Containment Atmospheric Monitoring System provides appropriate information to allow the operator to evaluate the need for manual initiation of the CGCS. The variables monitored are described in Subsection 7.6.1.10. Compressor differential pressure is monitored in the main control room. Both the compressors and recombiners are provided with local instrumenation

which are monitored while testing or operating. Abnormalities are alarmed in the main control room.

The ranges provided assure continuous monitoring during system operation. The system operates in order to maintain combustible gas concentration levels below the flammable range.

Criterion 41: Containment Atmosphere Cleanup

The CGCS serves to control the concentration of hydrogen in the containment and drywell atmosphere. Refer to Subsection 6.2.5.1 for a description of CGCS operation. Redundancy is described in Subsection 6.2.5.1.

Isolation is accomplished automatically by air testable check valves for drywell penetrations and by four motor-operated valves for containment penetrations. The CGCS purge and vacuum relief lines are normally at atmospheric pressure. There is therefore no need for a leak detection system for these lines.

Criterion 43: Testing of Containment Atmosphere Cleanup Systems

Testing of the CGCS is discussed in Subsections 6.2.5.1.4.

Criterion 54: Piping Systems Penetrating Containment

Leak detection and isolation are discussed under Criterion 41 above. Redundancy is discussed in Subsections 6.2.5. System testing is discussed in Subsection 6.2.5.1.4.

Criterion 56: Primary Containment Isolation

The hydrogen recombiners are located outside the primary containment. Automatic isolation is provided upon detection of a LOCA by motor-operated valves outside of the penetration. These valves are located as close as practical to the penetration and may be opened to allow operation of the hydrogen recombiners.

7.3.2.7.2.2 Conformance to IEEE Standard 279

The CGCS is designed to conform to the requirements of Section 4 of IEEE Standard 279, Criteria for Protection Systems for Nuclear Power Generating Stations, as described in this Section.

7.3.2.7.2.2.1 General Functional Requirements (IEEE 279, Paragraph 4.1)

A complete description of the post-LOCA is found in Subsections 6.2.1 and 6.2.3. As demonstrated by the accident description and analysis discussions of Section 6.2.5.1.3, it has been calculated that operation of the drywell-containment mixing compressors and hydrogen recombiners is not required immediately after the event. As a consequence, operation of both the mixing compressors and recombiners is manually initiated.

7.3.2.7.2.2.2 Single Failure Criterion (IEEE 279, Paragraph 4.2)

The CGCS, is comprised of two independent sets of controls for the physically separated actuated systems, and meets single failure criteria.

7.3.2.7.2.2.3 Quality of Components and Modules (IEEE 279, Paragraph 4.3)

Components used in the CGCS have been carefully selected on the basis of suitability for the specific application. The logic relays have been selected with conservatism to ensure against significant deterioration during anticipated duty over the lifetime of the plant.

A quality assurance program is required to be implemented and documented by equipment vendors with the intent of complying with the requirements set forth in 10 CFR 50, Appendix B.

7.3.2.7.2.2.4 Equipment Qualification (IEEE 279, Paragraph 4.4)

The CGCS essential components meet the equipment requirements described in Sections 3.10 and 3.11.

7.3.2.7.2.2.5 Channel Integrity (IEEE 279, Paragraph 4.5)

Type testing of components, separation of sensors and channels, and qualification of cabling are utilized to ensure that the channels will maintain the functional capability required under applicable design basis conditions.

Loss of or damage to any one channel will not prevent the action of the redundant channel. The process transmitters are located in the containment and are specified and rated for the intended service.

7.3.2.7.2.2.6 Channel Independence (IEEE 279, Paragraph 4.6)

Channel independence is provided by electrical and physical separation between the redundant systems.

7.3.2.7.2.7 Control and Protection System Interaction (IEEE 279, Paragraph 4.7)

The nonessential vacuum relief valve test circuitry is entirely separate and isolated from the CGCS. Isolation circuits are provided between the CGCS and the computer and annunciator circuits.

7.3.2.7.2.2.8 Derivation of System Inputs (IEEE 279, Paragraph 4.8)

The signals used for system inputs are direct measures of the desired variables. Manual initiation of the hydrogen recombiners is based on main control room indication of hydrogen levels.

7.3.2.7.2.2.9 Capability for Sensor Checks (IEEE 279, Paragraph 4.9)

The sensors which are used for input to the CGCS can be checked one at a time by application of simulated signals during normal plant operation.

7.3.2.7.2.2.10 Capability for Test and Calibration (IEEE 279, Paragraph 4.10)

Testing of CGCS is discussed in Subsection 6.2.5.1.4. All instrumentation is accessible for periodic calibration and testing during normal plant operation or while shutdown.

7.3.2.7.2.2.11 Channel Bypass or Removal from Operation (IEEE 279, Paragraph 4.11)

Any one of the system channels may be tested, calibrated, or repaired without initiating system action. The single failure criterion continues to be met during these conditions.

7.3.2.7.2.2.12 Operating Bypasses (IEEE 279, Paragraph 4.12)

There are no operating bypasses in the CGCS. Portions of the CGCS may, however, be manually bypassed by pulling a fuse or tripping the feeder breakers to an emergency switchgear section or "racking out" a compressor motor starter feeder breaker at a motor control center.

7.3.2.7.2.2.13 Indication of Bypasses (IEEE 279, Paragraph 4.13)

Not Applicable.

7.3.2.7.2.2.14 Access to Means for Bypassing (IEEE 279, Paragraph 4.14)

Not Applicable.

7.3.2.7.2.2.15 Multiple Set Points (IEEE 279, Paragraph 4.15)

There are no multiple set points in the CGCS.

7.3.2.7.2.2.16 Completion of Protective Action Once It Is Initiated (IEEE 279, Paragraph 4.16)

Not Applicable.

7.3.2.7.2.2.17 Manual Initiation (IEEE 279, Paragraph 4.17)

Each compressor with its suction valve, recombiner and its associated suction/return valves is capable of individual manual initiation from the Main Control Room.

7.3.2.7.2.2.18 Access to Set Point Adjustments (IEEE 279, Paragraph 4.18)

Set point adjustments for the devices which are used by the combustible gas control systems are located on the instrument panels and are accessible during normal plant operation but are under administrative controls.

7.3.2.7.2.2.19 Identification of Protective Actions (IEEE 279, Paragraph 4.19)

The system is manually initiated. The status of each component of the system is also indicated by status lights in the control room.

7.3.2.7.2.2.20 Information Readout (IEEE 279, Paragraph 4.20)

Refer to Section 7.5 for a discussion of safety-related display information.

7.3.2.7.2.2.21 System Repair (IEEE 279, Paragraph 4.21)

Identification of a defective device is accomplished by observation of system status lights, by indication provided for system parameters, or by testing as described in Subsection 6.2.5.1.4. Replacement or repair of devices is accomplished with the affected device taken out of service.

7.3.2.7.2.2.22 Identification (IEEE 279, Paragraph 4.22)

Nameplates identify the electrical separation division for each instrument panel or instrument or both.

7.3.2.7.2.3 Conformance to IEEE Standard 338

All components of the CGCS can be tested during plant operation. Valves and compressors can be tested from control room switches to verify operability. Each trip channel can be individually tested without initiating protective action. Upon the occurrence of a LOCA, any test will be automatically overridden by the LOCA signal. Refer to Subsection 6.2.5.1.4 for a discussion of testing of CGCS mechanical equipment.

7.3.2.7.2.4 Branch Technical Position EICSB 19

Branch Technical Position ICSB 19, “Acceptability of Design Criteria for Hydrogen Mixing and Drywell Vacuum Relief Systems,” has been deleted from Appendix 7A of the Standard Review Plan, NUREG-800 Revision 2.

7.3.2.8 Standby Power System - Instrumentation and Controls

7.3.2.8.1 HPCI Instrumentation and Controls

Refer to Section 8.3.

7.3.2.8.2 Emergency Diesel-Generator System

See Section 8.3 for this information.

7.3.2.9 Standby Gas Treatment System Instrumentation and Controls

7.3.2.9.1 Specific Conformance of the Instrumentation and Control of IEEE 279

7.3.2.9.1.1 General Functional Requirements (IEEE 279, Paragraph 4.1)

The standby gas treatment system will perform its normal and safety function during all phases of station operation and during a postulated accident condition. The standby gas treatment system is automatically initiated in response to any one of the signals described in Subsection 7.3.1.1.9.2. The system can also be manually initiated from the main control room.

7.3.2.9.1.2 Single-Failure Criteria (IEEE 279, Paragraph 4.2)

The standby gas treatment system consists of two full-capacity independent equipment trains which are powered from independent Class 1E buses and actuated by independent control circuits. Indications are powered from separate electrical sources for the two independent equipment trains. This satisfies the single failure criteria.

7.3.2.9.1.3 Quality of Components and Modules (IEEE 279, Paragraph 4.3)

Components used in the standby gas treatment have been carefully selected on the basis of suitability for the specific application. The logic relays have been selected with conservatism to ensure against significant deterioration during anticipated duty over the lifetime of the plant.

A quality assurance program is required to be implemented and documented by equipment vendors with the intent of complying with the requirements set forth in 10 CFR 50, Appendix B.

7.3.2.9.1.4 Equipment Qualification (IEEE 279, Paragraph 4.4)

The nuclear safety-related instrumentation and controls for the standby gas treatment system are qualified by type test and/or analyses in conformance with the contract specification.

7.3.2.9.1.5 Channel Integrity (IEEE 279, Paragraph 4.5)

Instrumentation and controls for the standby gas treatment system are qualified to maintain their functional capability under extreme conditions specified in the design environmental parameters.

7.3.2.9.1.6 Channel Independence (IEEE 279, Paragraph 4.6)

Electrical and mechanical separation is maintained between the instrumentation and controls of the redundant trains.

7.3.2.9.1.7 Control and Protection Interaction (IEEE 279, Paragraph 4.7)

7.3.2.9.1.7.1 Classification of Equipment (IEEE 279, Paragraph 4.7.1)

Instruments and controls for the standby gas treatment system provide filtration control and isolation function only. The protective action signal originates from separate devices. There is no interaction between these devices and instruments used for control function.

7.3.2.9.1.7.2 Isolation Devices (IEEE 279, Paragraph 4.7.2)

The transmission of signals from protection system equipment for control system passes through isolation devices which are classified as part of the protection system and meet all the requiremetns of IEEE-279. No credible failure at the output of the isolation device(s) prevents the associated protective system channels from meeting the minimum performance requirements specified in the design basis.

7.3.2.9.1.7.3 Single Random Failure (IEEE 279, Paragraph 4.7.3)

A control system action caused by a single random failure at a SGTS system channel will not interact with reactor protection system. A credible failure of one SGTS train will not prevent the proper operation of the redundant train.

7.3.2.9.1.7.4 Multiple Failures Resulting From a Credible Single Event (IEEE 279, Paragraph 4.7.4)

A control system action caused by a multiple failure resulting from a credible single event at a SGTS channels will not interact with the RPS.

7.3.2.9.1.8 Derivation of System Inputs (IEEE 279, Paragraph 4.8)

The signals for essential instruments are direct measures of desired variable parameters.

7.3.2.9.1.9 Capability for Sensor Checks (IEEE 279, Paragraph 4.9)

The sensors which are used for input to the standby gas treatment system can be checked one at a time by application of simulated signals during normal plant operation.

7.3.2.9.1.10 Capability for Test and Calibration (IEEE 279, Paragraph 4.10)

The instruments and controls for the standby gas treatment are located such that they are accessible for periodic testing and calibration without affecting the safety function of the other associated instruments.

7.3.2.9.1.11 Channel Bypass or Removal from Operation (IEEE 279, Paragraph 4.11)

Either train may be shutdown for repair work by placing the control switch in the pull-to-lock position. This action is annunciated in the main control room.

7.3.2.9.1.12 Operating Bypasses (IEEE 279, Paragraph 4.12)

Not applicable.

7.3.2.9.1.13 Indication of Bypasses (IEEE 279, Paragraph 4.13)

The pull-to-lock control switch selection for each fan causes all corresponding indicating lights in the main control room to go out.

7.3.2.9.1.14 Access to Means for Bypassing (IEEE 279, Paragraph 4.14)

The handswitches in the main control room are under the administrative control of the operators.

7.3.2.9.1.15 Multiple Setpoints (IEEE 279, Paragraph 4.15)

This is not applicable.

7.3.2.9.1.16 Completion of Protective Action Once it is Initiated (IEEE 279, Paragraph 4.16)

It is not necessary that the actions of this system go to completion. Only by deliberate operator action can the action be stopped or reversed.

7.3.2.9.1.17 Manual Initiation (IEEE 279, Paragraph 4.17)

Startup of major components of each equipment train can be initiated from the main control room bench board.

7.3.2.9.1.18 Access to Setpoint Adjustments, Calibration, and Test Points (IEEE 279, Paragraph 4.18)

Access to setpoints, and calibrations, are under administrative control.

7.3.2.9.1.19 Identification of Protective Actions (IEEE 279, Paragraph 4.19)

Indication and annunciation are provided on panels in the main control room for any one of the initiating conditions described in Subsection 7.3.1.1.9.2.

7.3.2.9.1.20 Information Readout (IEEE 279, Paragraph 4.20)

As appropriate, indicators are provided in the main control room and on local panels. Important alarm conditions are annunciated in the main control room and indicated locally. These alarms and indicators provide the operators with accurate, complete and timely status information.

7.3.2.9.1.21 System Repair (IEEE 279, Paragraph 4.21)

The standby gas treatment system instrumentation and controls are located to facilitate the recognition, location, replacement, repair, or adjustment of any malfunctioning instrument(s).

7.3.2.9.1.22 Identification (IEEE 279, Paragraph 4.22)

Nameplates identify the electrical separation division for each instrument panel or instrument or both. All interconnecting wires and cables are properly identified with tags.

7.3.2.9.2 Specific Conformance of Instruments and Controls to General Design Criteria 10 CFR 50, Appendix A

Criterion 13 Instrumentation and Control

Instrumentation and controls for the standby gas treatment system have been provided to limit the offsite dose to the limits of 10 CFR 100 and to maintain a negative pressure in the secondary containment under abnormal station operating conditions.

7.3.2.10 Suppression Pool Makeup System

7.3.2.10.1 Conformance with General Functional Requirements

General functional requirements for the suppression pool makeup system are described in Subsection 6.2.7.2.

7.3.2.10.2 Conformance with Specific Regulatory Requirements

7.3.2.10.2.1 Conformance With 10 CFR 50, General Design Criteria

General design criteria, established in Appendix A of 10 CFR 50, which are generally applicable to all ECCS systems are discussed in Subsection 7.3.2.1. Those with specific impact on the suppression pool makeup system are discussed in this Section.

Criterion 13: Instrumentation and Controls

Instrumentation is provided with the suppression pool makeup system to monitor suppression pool level over the full range of anticipated levels during normal operations and accident conditions as required to initiate the system.

Criterion 35: Emergency Core Cooling

The suppression pool makeup system maintains the suppression pool as an adequate source of core cooling water for the five ECCS pumps. The rate and volume of dump is sufficient to prevent the five ECCS pumps from lowering the suppression pool water level below the elevation required for minimum vent coverage and ECCS pump NPSH.

Criterion 37: Testing of Emergency Core Cooling System

Provisions are included in the suppression pool makeup system to allow periodic testing of each component in the system without initiating protective action during reactor operation.

7.3.2.10.2.2 Conformance to IEEE Standard 279

The suppression pool makeup system is designed to conform with the requirements of Section 4 of IEEE Standard 279, Criteria for Protection Systems for Nuclear Power Generating Stations, as described below:

Requirement 4.1: General Functional Requirement

The suppression pool makeup system is automatically initiated whenever the conditions it monitors require system action.

Requirement 4.2: Single Failure Criterion

The suppression pool makeup system, comprised of two independent and redundant actuation systems, meets all credible aspects of the single failure criterion. By providing two initiation signals from primary sensors in each actuation system, and by using separate relay logic circuits for the two valves in each system, it is assured that no single failure of an instrument or relay can cause an inadvertent dump of the upper containment pool or prevent a dump from occurring if conditions require it.

Requirement 4.3: Quality of Components and Modules

Components used in the suppression pool makeup system have been carefully selected on the basis of suitability for the specific application. The logic relays have been selected with conservatism to ensure against significant deterioration during anticipated duty over the lifetime of the plant.

A quality assurance program is required to be implemented and documented by equipment vendors with the intent of complying with the requirements set forth in 10 CFR 50, Appendix B.

Requirement 4.4: Equipment Qualification

The suppression pool makeup system components meet the equipment qualification requirements described in Sections 3.10 and 3.11.

Requirement 4.5: Channel Integrity

Type testing of components, separation of sensors and channels, and qualification of cabling are utilized to ensure that the channels will maintain the functional capability required under applicable design basis conditions.

Loss of or damage to any one channel will not prevent the action of the redundant channel.

Requirement 4.6: Channel Independence

Channel independence for sensors is provided by electrical and mechanical separation.

Requirement 4.7: Control and Protective System Interaction

No portion of the suppression pool makeup system is used for control functions.

Requirement 4.8: Derivation of System Inputs

The level transmitters which provide signals as inputs to the suppression pool makeup system give a direct measure of the desired variable, suppression pool level.

Requirement 4.9: Capability for Sensor Checks

The sensors which are used for input to the suppression pool makeup system can be checked one at a time by application of simulated signals during normal plant operation.

Requirement 4.10: Capability for Test and Calibration

Electronic trip calibration units are provided for this and other systems. The primary sensors provide an analog (4-20 mA) signal to trip units in the main control room. The trip units provide contact outputs to drive the system relay logic and initiate system action.

A calibration unit mounted in the same rack as the trip units provides means to perform an inplace calibration check or setpoint adjustment. Refer to Subsection 7.3.1.1.10.10 for a discussion of inservice testability.

Requirement 4.11: Channel Bypass or Removal from Operation

Either of the two channels may be removed from operation. System action is assured by the redundant channel which operates the valves in the alternate dump line. While a trip unit may be bypassed, however, system action will not be initiated unless there is a LOCA or the control switch is placed in the open position.

Requirement 4.12: Operating Bypasses

Refer to Subsection 7.3.1.1.10.6 for a discussion of suppression pool makeup system bypasses. It may also be bypassed by manually opening a valve motor starter feeder breaker at a motor-control center. The bypass is under the control of supervisory personnel and is not intended to be automatically overcome by accident detection signals.

Requirement 4.13: Indication of Bypasses

Bypass of either train of the suppression pool makeup system is continuously indicated in the main control room.

Requirement 4.14: Access to Means for Bypassing

Access to means for bypassing the suppression pool makeup system is under administrative control. Handswitches for system bypass are located in the main control room.

Requirement 4.15: Multiple Setpoints

There are no multiple setpoints in the suppression pool makeup system.

Requirement 4.16: Completion of Protective Action Once It is initiated.

Once initiated, either automatically or manually, operator action is required to stop the flow of upper containment pool water to the suppression pool.

Requirement 4.17: Manual Initiation

The suppression pool makeup system may be manually initiated on a system level from main control room handswitches.

No failure in one division of the suppression pool makeup system can prevent operation of the redundant system.

Requirement 4.18: Access to Setpoint Adjustments, Calibration and Test Points

The electronic trip and calibration units are under administrative control in the main control room.

Requirement 4.19: Identification of Protective Actions

Initiation of the suppression pool makeup system is annunciated in the main control room. The status of each device in the system is indicated in the main control room.

Requirement 4.20: Information Readout

Refer to Section 7.5 for a discussion of safety-related display instrumentation.

Requirement 4.21: System Repair

Identification of a defective channel is accomplished by observation of system status lights or by testing as described in Subsection 7.3.2.10.2.3. Replacement or repair of components is accomplished with the affected channel bypassed. The affected trip function then operates with a single sensor.

Requirement 4.22: Identification

Nameplates identify the electrical separation division for each instrument panel or instrument or both. All interconnecting wires and cables are properly identified with tags.

7.3.2.10.2.3 Conformance to IEEE Standard 338

All components of the suppression pool makeup system can be tested during plant operation. Each trip channel can be individually tested without initiating protective action. The dump valves can be individually opened from main control room handswitches to test their operation. Interlocks are provided to prevent an inadvertent dump of the upper containment pool water during refueling.

7.3.2.11 Diesel Oil-Instrumentation and Controls

7.3.2.11.1 Conformance to General Functional Requirements

Conformance to general functional requirements is also described in Subsection 9.5.4.

The diesel fuel oil system is an auxiliary system for the emergency diesel generators. The functional requirements of the diesel fuel oil system assure that the generators always have a source of fuel and in the quantity required.

The diesel fuel oil system is designed and operated to assure a supply of fuel oil from the day tank to the diesel generators. Sufficient fuel oil is maintained in the storage tank as described in Subsection 9.5.4. Low level alarms in the main control room, remote indication, and visual inspection provide indication of storage tank fuel oil volume.

Day tank fuel oil volume is controlled by the operation of the transfer pumps. Set points for pump start and stop are chosen to assure that the day tank has the required volume of fuel oil. Should the generator be started for any reason, the transfer pumps will also start. The flow capacity of the transfer pumps is greater than the full load requirements of the diesel generators assuring continuous fuel oil availability from the day tank. Oil in excess of that required to keep the day tank full is recirculated to the storage tank. Low levels are also alarmed in the main control room.

Flow from the day tank to the generator is by gravity. With sufficient fuel oil volume in and makeup flow to the day tank, supply to the generator is maintained.

Should the generator start signal fail to start the transfer pump, the day tank level switch will start the pump to add fuel oil to the day tank.

Low level (transfer pump start) is determined such that the volume of fuel oil in the tank at low level is sufficient to start the generator. Temperature monitoring is not provided for the diesel fuel oil storage and transfer system.

7.3.2.11.2 Conformance to Specific Regulatory Requirements

7.3.2.11.2.1 Conformance to 10 CFR 50, Appendix A

Criterion 13

Conformance is achieved by monitoring day tank and storage tank levels over the expected range and by providing controls to maintain the required volume of fuel oil in the day tank.

Criterion 17, 18

The diesel fuel oil system is divided into Division 1, Division 2, and Division 3. The independence of these divisions prevents compromise and enhances inspection of safety-related power supply systems.

7.3.2.11.2.2 Conformance to Industry Standards

7.3.2.11.2.2.1 IEEE 279, Criteria for Protection Systems for Nuclear Power Generating Stations

7.3.2.11.2.2.1.1 General Functional Requirements (IEEE 279, Paragraph 4.1)

The diesel fuel oil transfer pumps may be started manually from the main control room. When started, the pump is stopped automatically on high day tank level and generator stop signal. The pump can be stopped manually under conditions which could cause system damage or under conditions where system operation is neither necessary nor appropriate.

7.3.2.11.2.2.1.2 Single Failure Criterion (IEEE 279, Paragraph 4.2)

The single failure criterion is met by providing three separate and independent subsystems in the diesel fuel oil system. No single failure of one subsystem will affect either of the other two subsystems from performing their respective safety functions.

7.3.2.11.2.2.1.3 Quality of Components and Modules (IEEE 279, Paragraph 4.3)

Components used in the diesel fuel oil system have been carefully selected on the basis of suitability for the specific application. The logic relays have been selected with conservatism to ensure against significant deterioration during anticipated duty over the lifetime of the plant.

A quality assurance program is required to be implemented and documented by equipment vendors with the intent of complying with requirements set forth in 10 CFR 50, Appendix B.

7.3.2.11.2.2.1.4 Equipment Qualification (IEEE 279, Paragraph 4.4)

Class 1E equipment qualification is demonstrated by the vendors or others by type tests in accordance with the purchase specification. Where necessary operating experience or analysis is used to supplement type tests.

7.3.2.11.2.2.1.5 Channel Integrity (IEEE 279, Paragraph 4.5)

The diesel fuel oil system is designed to maintain its functional capability under the environmental conditions, electrical transients, and malfunctions that may occur in the design basis LOCA.

7.3.2.11.2.2.1.6 Channel Independence (IEEE 279, Paragraph 4.6)

Channel independence for sensors is provided by electrical and mechanical separation. Physical separation is maintained among the three subsystems to increase reliability of operation. There are no interfaces among the subsystems.

7.3.2.11.2.2.1.7 Control and Protection System Interaction (IEEE 279, Paragraph 4.7)

There are no control functions in the diesel fuel oil system.

7.3.2.11.2.2.1.8 Derivation of System Inputs (IEEE 279, Paragraph 4.8)

All input signals to the instrumentation and control systems are derived from direct measurement of system variables.

7.3.2.11.2.2.1.9 Capability of Sensor Checks (IEEE 279, Paragraph 4.9)

The sensors which are used for input to the diesel fuel oil system can be checked one at a time by application of simulated signals during normal plant operation.

7.3.2.11.2.2.1.10 Capability of Test and Calibration (IEEE 279, Paragraph 4.10)

All active components of the diesel fuel oil system can be tested during plant operation. Pumps can be tested by operating manual switches in the control room and observing indicating lights. Instrument setpoints are tested by simulated signals to verify the setpoints are within limits.

7.3.2.11.2.2.1.11 Channel Bypass or Removal from Operation (IEEE 279, Paragraph 4.11)

The diesel fuel oil system can be tested without channel bypass or removal from operation. Testing of transfer pumps will add oil to the day tank or will result in excess day tank fuel oil overflow returning to the storage tank.

7.3.2.11.2.2.1.12 Operating Bypasses (IEEE 279, Paragraph 4.12)

This requirement is not applicable to the diesel fuel oil system because no operating channel bypasses are provided.

7.3.2.11.2.2.1.13 Indication of Bypasses (IEEE 279, Paragraph 4.13)

When parts of the system have been deliberately made inoperative for test calibration or maintenance, an indication of this condition is provided in the main control room.

7.3.2.11.2.2.1.14 Access to Means for Bypassing (IEEE 279, Paragraph 4.14)

Not applicable to the diesel fuel oil system.

7.3.2.11.2.2.1.15 Multiple Set Points (IEEE 279, Paragraph 4.15)

All set points are fixed. However, transmitter calibration changes may be periodicaly required due to change in fuel oil grades (changes in specific gravity) which effectively changes setpoints in units of gallons. Administrative controls are used whenever such a change is required.

7.3.2.7.2.2.1.16 Completion of Protection Action Once Initiated (IEEE 279, Paragraph 4.16)

The diesel fuel oil system will remain in continuous operation after system initiation unless manually terminated or the diesel generator stops and there is a high level in the day tank.

7.3.2.11.2.2.1.17 Manual Actuation (IEEE 279, Paragraph 4.17)

Each diesel fuel oil subsystem can be initiated manually from the main control room.

7.3.2.11.2.2.1.18 Access to Set Point Adjustments, Calibration, and Test Point (IEEE 279, Paragraph 4.18)

Access to setpoint adjustments, calibration points and test points are under administrative control.

7.3.2.11.2.2.1.19 Identification of Protective Actions (IEEE 279, Paragraph 4.19)

Initiation of each diesel fuel oil subsystem is indicated in the main control room.

7.3.2.11.2.2.1.20 Information Read-Out (IEEE 279, Paragraph 4.20)

Meters located in the control room provide indication of process variables necessary for the proper operation of the diesel fuel oil system. Indicator lights actuated by pump controls provide pump status information.

7.3.2.11.2.2.1.21 System Repair (IEEE 279, Paragraph 4.21)

The system is designed to provide easy recognition of malfunctioning equipment through proper test procedures. Accessibility is provided for the sensors and controls to facilitate repair or adjustment.

7.3.2.11.2.2.1.22 Identification of Protection Systems (IEEE 279, Paragraph 4.22)

Nameplates identify the electrical separation division for each instrument panel or instrument or both.

7.3.2.11.2.2.2 Compliance to IEEE 338

The operability of the diesel fuel oil system can be verified, and credible failures are detectable through testing during normal plant operation. Each subsystem logic, through the final actuators, may be tested independent of the other subsystem. The input sensors and setpoints are checked by the application of simulated signals. A failure of a subsystem while testing will not prevent the other subsystems from being initiated.

7.3.2.11.2.2.3 Compliance to IEEE 379

See Subsection 7.3.2.11.2.2.1.2.

7.3.2.12 Diesel-Generator Room HVAC System – Instrumentation and Controls

7.3.2.12.1 Specific Conformance of the Instrumentation and Control to IEEE 279

7.3.2.12.1.1 General Functional Requirement (IEEE 279, Paragraph 4.1)

Instrumentation and controls are provided for each of the redundant diesel-generator room ventilation fans. The ventilation fans are interlocked to startup automatically upon the start of the respective diesel generator. The ventilation fans can also be started manually from the

main control room. With the associated remote shutdown transfer switch in either the NORMAL or EMERGENCY position, the Division 1 ventilation fan will automatically start with initiation of the Division 1 diesel generator.

A temperature switch installed in each diesel generator room will stop the respective fan if room temperature drops below a pre-determined setpoint and the diesel generator is not running.

7.3.2.12.1.2 Single Failure Criterion (IEEE 279, Paragraph 4.2)

Independent instrumentation and controls are provided for each of the three redundant ventilation fans. Single failure of the instrumentation and controls associated with one fan will not affect the safety-related function of the other two ventilation fans.

7.3.2.12.1.3 Quality of Components and Modules (IEEE 279, Paragraph 4.3)

Components used in the diesel-generator room HVAC have been carefully selected on the basis of suitability for the specific application. The logic relays have been selected with conservatism to ensure against significant deterioration during anticipated duty over the lifetime of the plant.

A quality assurance program is required to be implemented and documented by equipment vendors with the intent of complying with the requirements set forth in 10 CFR 50, Appendix B.

7.3.2.12.1.4 Equipment Qualification (IEEE 279, Paragraph 4.4)

The nuclear safety related instrumentation and controls for the diesel generator ventilation fans are qualified by type test and/or analyses in conformance with the contract specification.

7.3.2.12.1.5 Channel Integrity (IEEE 279, Paragraph 4.5)

Instrumentation and controls for the diesel-generator HVAC system are qualified to maintain their functional capability under extreme conditions specified in the design environmental parameters.

7.3.2.12.1.6 Channel Independence (IEEE 279, Paragraph 4.6)

The diesel-generator room ventilation systems instrument and control channels are independent from each other. Electrical and physical separation is maintained between the instruments and controls provided for the redundant ventilation systems, and no interface exists between the control channels.

7.3.2.12.1.7 Control and Protection System Interaction (IEEE 279, Paragraph 4.7)

7.3.2.12.1.7.1 Classification of Equipment (IEEE 279, Paragraph 4.7.1)

The instruments and controls provided for the diesel-generator ventilation fans do not have any direct interaction with the control and the safeguard function for the diesel generators.

7.3.2.12.1.7.2 Isolation Devices, Single Random Failure and Multiple Failures Resulting from a Credible Single Event (Paragraphs 4.7.2, 4.7.3, 4.7.4)

Does not apply based on Subsection 7.3.2.12.1.7.1.

7.3.2.12.1.8 Derivation of System Input (IEEE 279, Paragraph 4.8)

The signals for essential instruments are direct measures of desired variable parameters.

7.3.2.12.1.9 Capability for Sensor Checks (IEEE 279, Paragraph 4.9)

The sensors which are used for input to the diesel-generator room HVAC system can be checked one at a time by application of simulated signals during normal plant operation.

7.3.2.12.1.10 Capability for Test and Calibration (IEEE 279, Paragraph 4.10)

The instruments and controls for the diesel-generator ventilation system are located such that they are accessible for periodic testing and calibration without affecting the safety function of the other associated instruments.

7.3.2.12.1.11 Channel Bypass or Removal from Operation (IEEE 279, Paragraph 4.11)

Removal from operation per design can be achieved from the pull-to-lock position on the control switch. Therefore this Paragraph does not apply.

7.3.2.12.1.12 Operating Bypass (IEEE 279, Paragraph 4.12)

The automatic start of the diesel generator room fans can be bypassed either by manual or pull to lock selection of the fan control switch.

7.3.2.12.1.13 Indication of Bypasses (IEEE 279, Paragraph 4.13)

The pull-to-lock control switch selection for each fan causes all corresponding indicating lights to go out.

7.3.2.12.1.14 Access to Means for Bypassing (IEEE 279, Paragraph 4.14)

The control switch for each fan is located on the main control benchboard and is under administrative control.

7.3.2.12.1.15 Multiple Set Points (IEEE 279, Paragraph 4.15)

The design of the diesel-generator room HVAC system control and instrumentation does not require provisions for multiple control setpoints.

7.3.2.12.1.16 Completion of Protective Action Once It Is Initiated (IEEE 279, Paragraph 4.16)

The operation of diesel-generator room ventilation fans does not require a protective action signal.

7.3.2.12.1.17 Manual Initiation (IEEE 279, Paragraph 4.17)

On the basis of Subsection 7.3.2.12.1.16, the requirement of this Paragraph does not apply.

7.3.2.12.1.18 Access to Set Point Adjustments, Calibrations and Test Points (IEEE 279, Paragraph 4.18)

Access to setpoint adjustments, calibrations, and test points are under administrative control.

7.3.2.12.1.19 Identification of Protective Action (IEEE 279, Paragraph 4.19)

This article does not apply since no protective action is required for the operation of diesel-generator room fans.

7.3.2.12.1.20 Information Read Out (IEEE 279, Paragraph 4.20)

Each diesel generator room is provided with local room temperature indicators. Ventilation fan status is indicated in the main control room.

7.3.2.12.1.21 System Repair (IEEE 279, Paragraph 4.21)

The diesel generator instrumentation and controls are located to facilitate the recognition, location, replacement, repair or adjustment of any malfunctioning instrument(s).

7.3.2.12.1.22 Identification (IEEE 279, Paragraph 4.22)

Nameplates identify the electrical separation division for each instrument panel or instrument or both. All interconnecting wires and cables are properly identified with tags.

7.3.2.12.2 Specific Conformance of the Instrumentation and Controls to General Criteria, 10 CFR 50 Appendix A

7.3.2.12.2.1 Criterion 13 - Instrumentation and Controls

Diesel generator ventilation fan instrumentation and controls for each system have been provided to monitor and maintain room temperature at a predetermined setpoint.

7.3.2.13 Shutdown Service Water Pump Room Ventilation System Instrumentation and Controls

7.3.2.13.1 Specific Conformance of the Instrumentation and Controls to IEEE-279

7.3.2.13.1.1 General Functional Requirements (IEEE 279, Paragraph 4.1)

Instruments and controls are provided to start each shutdown service water (SSW) pump room cooling system fan automatically when the respective SSW pump is started or the temperature in the pump room rises above the setpoint.

Fans in Pump Rooms can be started and stopped manually through their respective control switches provided on the main control benchboard.

7.3.2.13.1.2 Single Failure Criterion (IEEE 279, Paragraph 4.2)

Independent instrumenation and controls are provided for each of the three redundant ventilation fans. Single failure of the instrumentation and controls associated with one fan will not affect the safety related function of the other two ventilation fans.

7.3.2.13.1.3 Quality of Components and Modules (IEEE 279, Paragraph 4.3)

Components used in the SSW pump room ventilation have been carefully selected on the basis of suitability for the specific application. The logic relays have been selected with conservatism to ensure against significant deterioration during anticipated duty over the lifetime of the plant.

A quality assurance program is required to be implemented and documented by equipment vendors with the intent of complying with the requirements set forth in 10 CFR 50, Appendix B.

7.3.2.13.1.4 Equipment Qualification (IEEE 279, Paragraph 4.4)

The nuclear safety-related instrumentation and controls for the shutdown service water pump room ventilation fans are qualified by type test and/or analyses in conformance with the contract specification.

7.3.2.13.1.5 Channel Integrity (IEEE 279, Paragraph 4.5)

Instrumentation and controls for the SSW pump room system are qualified to maintain their functional capability under extreme conditions specified in the design environmental parameters.

7.3.2.13.1.6 Channel Independence (IEEE 279, Paragraph 4.6)

The SSW pump room ventilation systems instrument and control channels are independent from each other. Electrical and physical separation is maintained between the instruments and controls provided for the redundant ventilation systems, and no interface exists between the control channels.

7.3.2.13.1.7 Control and Protection System Interaction (IEEE 279, Paragraph 4.7)

7.3.2.13.1.7.1 Classification of Equipment (IEEE 279, Paragraph 4.7.1)

The instruments and controls provided for the SSW pump room ventilation fans do not have any direct interaction with the control and the function of the SSW pumps.

7.3.2.13.1.7.2 Isolation Devices, Single Random Failure and Multiple Failures Resulting from a Credible Single Event (Paragraphs 4.7.2, 4.7.3, 4.7.4 of IEEE-279

Does not apply based on Subsection 7.3.2.13.1.7.1.

7.3.2.13.1.8 Derivation of System Input (IEEE 279, Paragraph 4.8)

The signals for essential instruments are direct measures of desired variable parameters.

7.3.2.13.1.9 Capability for Sensor Checks (IEEE 279, Paragraph 4.9)

The sensors which are used for input to the SSW pump room ventilation system can be checked one at a time by application of simulated signals during normal plant operation.

7.3.2.13.1.10 Capability for Test and Calibration (IEEE 279, Paragraph 4.10)

The instruments, controls, and devices for the SSW pump room ventilation system are located such that they are accessible for periodic testing and calibration without affecting the safety function of the other related instruments.

7.3.2.13.1.11 Channel Bypass or Removal from Operation (IEEE 279, Paragraph 4.11)

This Paragraph does not apply.

7.3.2.13.1.12 Operating Bypass (IEEE 279, Paragraph 4.12)

The automatic start of the SSW pump room fans can be bypassed either by the manual or pull to lock selection of the fan control switch.

7.3.2.13.1.13 Indication of Bypasses (IEEE 279, Paragraph 4.13)

The pull-to-lock control switch selection for each fan causes an annunciator and an indicating light in the main control room to activate.

7.3.2.13.1.14 Access to Means for Bypassing (IEEE 279, Paragraph 4.14)

The control switch for each fan is located on the main control benchboard and is under administrative control.

7.3.2.13.1.15 Multiple Set Points (IEEE 279, Paragraph 4.15)

The design of the SSW pump room ventilation control and instrumentation does not require provisions for multiple control setpoints.

7.3.2.13.1.16 Completion of Protective Action Once It Is Initiated (IEEE 279, Paragraph 4.16)

The operation of SSW pump room ventilation fans does not require a protective action signal.

7.3.2.13.1.17 Manual Initiation (IEEE 279, Paragraph 4.17)

On the basis of Subsection 7.3.2.13.1.16, the requirement of this Paragraph does not apply.

7.3.2.13.1.18 Access to Set Point Adjustments, Calibrations and Test Points (IEEE 279, Paragraph 4.18)

Access to setpoint adjustments, calibrations, and test points are under administrative control.

7.3.2.13.1.19 Identification of Protective Action (IEEE 279, Paragraph 4.19)

This article does not apply since no protective action is required for the operation of SSW pump room fans.

7.3.2.13.1.20 Information Readout (IEEE 279, Paragraph 4.20)

Ventilation fan status is indicated in the main control room. Each SSW water pump room is provided with local room temperature indicators.

7.3.2.13.1.21 System Repair (IEEE 279, Paragraph 4.21)

The SSW pump room instrumentation and controls are located to facilitate the recognition, location, replacement, repair or adjustment of any malfunctioning instrument(s).

7.3.2.13.1.22 Identification (IEEE 279, Paragraph 4.22)

Nameplates identify the electrical separation division for each instrument panel or instrument or both. All interconnecting wires and cables are properly identified with tags.

7.3.2.13.2 Specific Conformance of the Instrumentation and Controls to General Criteria, 10 CFR 50 Appendix A

7.3.2.13.2.1 Criterion 13 - Instrumentation and Controls

SSW pump room ventilation instrumentation and controls for each system have been provided to monitor and maintain room temperature at a predetermined setpoint.

7.3.2.14 Essential Switchgear Heat Removal HVAC System Instrumentation and Controls

7.3.2.14.1 Specific Conformance of the Instrumentation and Controls to IEEE-279

7.3.2.14.1.1 General Functional Requirements (IEEE 279, Paragraph 4.1)

Instruments and controls are provided to start and stop the ventilation fans for the switchgear heat removal system to maintain switchgear room temperature between the high and low setpoints.

Each switchgear room is provided with one nuclear safety-related and one non-safety-related heat removal coil cabinet and a fan unit.

The safety-related fan can be started and stopped manually through a control switch provided in the main control room. When the control switch is placed in the AUTO position, the fan is interlocked with the room thermostat to start automatically when the room temperature rises above the high setpoint and to stop automatically when the room temperature drops below the reset value. The chilled water runs through the cooling coil without control at all times.

The non-safety related fan can be started and stopped manually through a control switch located on the MCB. The fan will stop automatically when the safety-related fan starts. A temperature transmitter sensing the room temperature modulates the chilled water valve through a temperature controller to maintain the room temperature at a predetermined setpoint.

7.3.2.14.1.2 Single Failure Criterion (IEEE 279, Paragraph 4.2)

Independent instrumentation and controls are provided for each of the three redundant ventilation fans. Single failure of the instrumentation and controls associated with one fan will not affect the safety-related function of the other two ventilation fans.

7.3.2.14.1.3 Quality of Components and Modules (IEEE 279, Paragraph 4.3)

Components used in the essential switchgear heat removal HVAC system have been carefully selected on the basis of suitability for the specific application. The logic relays have been selected with conservatism to ensure against significant deterioration during anticipated duty over the lifetime of the plant.

A quality assurance program is required to be implemented and documented by equipment vendors with the intent of complying with the requirements set forth in 10 CFR 50, Appendix B.

7.3.2.14.1.4 Equipment Qualification (IEEE 279, Paragraph 4.4)

The nuclear safety-related instrumentation and controls for the switchgear heat removal ventilation fans are qualified by type test and/or analyses in conformance with the contract specification.

7.3.2.14.1.5 Channel Integrity (IEEE 279, Paragraph 4.5)

Instrumentation and controls for the switchgear heat removal HVAC system are qualified to maintain their functional capability under extreme conditions specified in the design environmental parameters.

7.3.2.14.1.6 Channel Independence (IEEE 279, Paragraph 4.6)

The switchgear heat removal room ventilation systems instruments and controls channel are independent from each other. Electrical and physical separation is maintained between the instruments and controls provided for the redundant ventilation systems, and no interface exists between the control channels.

7.3.2.14.1.7 Control and Protection System Interaction (IEEE 279, Paragraph 4.7)

7.3.2.14.1.7.1 Classification of Equipment (IEEE 279, Paragraph 4.7.1)

The instruments and controls provided for the switchgear heat removal ventilation fans do not have any direct interaction with the control and the protective function of the essential switchgear.

7.3.2.14.1.7.2 Isolation Devices, Single Random Failure and Multiple Failures Resulting from a Credible Single Event (Paragraphs 4.7.2, 4.7.3, 4.7.4 of IEEE-279)

Does not apply based on Subsection 7.3.2.12.1.7

7.3.2.14.1.8 Derivation of System Input (IEEE 279, Paragraph 4.8)

The signals for essential instruments are direct measures of desired variable parameters.

7.3.2.14.1.9 Capability for Sensor Checks (IEEE 279, Paragraph 4.9)

The sensors which are used for input to the essential switchgear heat removal HVAC system can be checked one at a time by application of simulated signals during normal plant operation.

7.3.2.14.1.10 Capability for Test and Calibration (IEEE 279, Paragraph 4.10)

The instruments and controls for the switchgear heat removal ventilation system are located such that they are accessible for periodic testing and calibration without affecting the safety function of the other related instruments.

7.3.2.14.1.11 Channel Bypass or Removal from Operation (IEEE 279, Paragraph 4.11)

This Paragraph does not apply.

7.3.2.14.1.12 Operating Bypass (IEEE 279, Paragraph 4.12)

The automatic start of the switchgear heat removal room fans can be bypassed either by the manual or pull-to-lock selection of the fan control switch.

7.3.2.14.1.13 Indication of Bypasses (IEEE 279, Paragraph 4.13)

The pull-to-lock control switch selection for each fan causes an annunciator and an indicating light in the main control room to activate.

7.3.2.14.1.14 Access to Means for Bypassing (IEEE 279, Paragraph 4.14)

The control switch for each fan is located on the main control benchboard under administrative control.

7.3.2.14.1.15 Multiple Set Points (IEEE 279, Paragraph 4.15)

The design of the essential switchgear heat removal HVAC system control and instrumentation does not require provisions for multiple control setpoints.

7.3.2.14.1.16 Completion of Protective Action Once It Is Initiated (IEEE 279, Paragraph 4.16)

The operation of essential switchgear heat removal HVAC system ventilation fans do not require a protective action signal.

7.3.2.14.1.17 Manual Initiation (IEEE 279, Paragraph 4.17)

On the basis of Subsection 7.3.2.14.1.16, the requirement of this Paragraph does not apply.

7.3.2.14.1.18 Access to Set Point Adjustments, Calibrations, and Test Points (IEEE 279, Paragraph 4.18)

Access to setpoint adjustments, calibrations, and test points are under administrative control.

7.3.2.14.1.19 Identification of Protective Actions (IEEE 279, Paragraph 4.19)

This article does not apply since no protective action is required for the operation of switchgear heat removal room fans.

7.3.2.14.1.20 Information Read Out (IEEE 279, Paragraph 4.20)

Ventilation fan status is indicated in the main control room. Each switchgear heat removal room is provided with local room temperature indicators.

7.3.2.14.1.21 System Repair (IEEE 279, Paragraph 4.21)

The switchgear heat removal HVAC system instrumentation and controls are located to facilitate the recognition, location, replacement, repair, or adjustment of any malfunctioning instrument(s).

7.3.2.14.1.22 Identification (IEEE 279, Paragraph 4.22)

Nameplates identify the electrical separation division for each instrument panel or instrument or both. All interconnecting wires and cables are properly identified with tags.

7.3.2.14.2 Specific Conformance of the Instrumentation and Controls to General Criteria, 10 CFR 50 Appendix A

7.3.2.14.2.1 Criterion 13 - Instrumentation and Controls

Essential switchgear heat removal ventilation instrumentation and controls for each system have been provided to monitor and maintain room temperature at a predetermined setpoint.

7.3.2.15 ECCS Equipment Room HVAC System - Instrumentation and Controls

7.3.2.15.1 Specific Conformance of the Instrumentation and Controls to IEEE-279

7.3.2.15.1.1 General Functional Requirement (IEEE 279, Paragraph 4.1)

Instruments and controls are provided to automatically start the LPCS, RCIC, and RHR pump room HVAC fans when the respective ECCS equipment is started, or the ambient temperature in the cubicle rises above the high setpoint. The RHR heat exchanger room fans are operated automatically only with ambient temperature, while HPCS, MSIV Inboard and MSIV Outboard room fans are operated automatically only with operation of the respective ECCS equipment.

Control switches for each fan are located on the main control room benchboard except for the MSIV Inboard and MSIV Outboard room fan control switches which are located on a local panel.

7.3.2.15.1.2 Single Failure Criterion (IEEE 279, Paragraph 4.2)

Independent instrumentation and controls are provided for each of the redundant ventilation fans. Single failure of the instrumentation and controls associated with one fan will not affect the safety related function of the other ventilation fans.

7.3.2.15.1.3 Quality of Components and Modules (IEEE 279, Paragraph 4.3)

Components used in the ECCS equipment room HVAC system have been carefully selected on the basis of suitability for the specific application. The logic relays have been selected with conservatism to ensure against significant deterioration during anticipated duty over the lifetime of the plant.

A quality assurance program is required to be implemented and documented by equipment vendors with the intent of complying with the requirements set forth in 10 CFR 50, Appendix B.

7.3.2.15.1.4 Equipment Qualification (IEEE 279, Paragraph 4.4)

The nuclear safety-related instrumentation and controls for the ECCS equipment room ventilation fans are qualified by type test and/or analyses in conformance with the contract specification.

7.3.2.15.1.5 Channel Integrity (IEEE 279, Paragraph 4.5)

Instrumentation and controls for the ECCS equipment room ventilation system are qualified to maintain their functional capability under extreme conditions specified in the design environmental parameters.

7.3.2.15.1.6 Channel Independence (IEEE 279, Paragraph 4.6)

The ECCS equipment room ventilation systems instruments and controls channel are independent from each other. Electrical and physical separation is maintained between the instruments and controls provided for the redundant ventilation systems, and no interface exists between the control channels.

7.3.2.15.1.7 Control and Protection System Interaction IEEE 279, Paragraph 4.7)

7.3.2.15.1.7.1 Classification of Equipment (IEEE 279, Paragraph 4.7.1)

The instruments and controls provided for the ECCS equipment room ventilation fans do not have any direct interaction with the control and the function of the ECCS.

7.3.2.15.1.7.2 Isolation Devices, Single Random Failure and Multiple Failures Resulting from a Credible Single Event (Paragraphs 4.7.2, 4.7.3, 4.7.4 of IEEE-279

Does not apply based on Subsection 7.3.2.15.1.7.1.

7.3.2.15.1.8 Derivation of System Input (IEEE 279, Paragraph 4.8)

The signals for essential instruments are direct measures of desired variable parameters.

7.3.2.15.1.9 Capability for Sensor Checks (IEEE 279, Paragraph 4.9)

The sensors which are used for input to the ECCS equipment room HVAC can be checked one at a time by application of simulated signals during normal plant operation.

7.3.2.15.1.10 Capability for Test and Calibration (IEEE 279, Paragraph 4.10)

The instruments and controls for the ECCS equipment room ventilation system are located such that they are accessible for periodic testing and calibration without affecting the safety function of the other related instruments.

7.3.2.15.1.11 Channel Bypass or Removal from Operation (IEEE 279, Paragraph 4.11)

This Paragraph does not apply.

7.3.2.15.1.12 Operating Bypass (IEEE 279, Paragraph 4.12)

This Paragraph does not apply.

7.3.2.15.1.13 Indication of Bypasses (IEEE 279, Paragraph 4.13)

This Paragraph does not apply.

7.3.2.15.1.14 Access to Means for Bypassing (IEEE 279, Paragraph 4.14)

This Paragraph does not apply.

7.3.2.15.1.15 Multiple Set Points (IEEE 279, Paragraph 4.15)

The design of the ECCS equipment room control and instrumentation does not require provisions for multiple control setpoints.

7.3.2.15.1.16 Completion of Protective Action Once It Is Initiated (IEEE 279, Paragraph 4.16)

The operation of ECCS equipment room ventilation fans do not require a protective action signal.

7.3.2.15.1.17 Manual Initiation (IEEE 279, Paragraph 4.17)

On the basis of Subsection 7.3.2.15.1.16, the requirement of this Paragraph does not apply.

7.3.2.15.1.18 Access to Set Point Adjustments, Calibrations, and Test Points (IEEE 279 Paragraph 4.18)

Access to setpoint adjustments, calibrations, and test points are under administrative control.

7.3.2.15.1.19 Identification of Protective Actions (IEEE 279 Paragraph 4.19)

This article does not apply since no protective action is required for the operation of ECCS equipment room fans.

7.3.2.15.1.20 Information Read Out (IEEE 279 Paragraph 4.20)

Except for the MSIV Inboard and Outboard rooms, ventilation fan status is provided in the control room. The MSIV room fans are indicated locally with off normal status provided in the control room. Temperature of each ECCS Equipment room is available in the main control room. Each room except the HPCS, MSIV Inboard and MSIV Outboard rooms is provided with local room temperature indication.

7.3.2.15.1.21 System Repair (IEEE 279 Paragraph 4.21)

The ECCS equipment ventilation instrumentation and controls are located to facilitate the recognition, location, replacement, repair, or adjustment of any malfunctioning instrument(s).

7.3.2.15.1.22 Identification (IEEE 279 Paragraph 4.22)

Nameplates identify the electrical separation division for each instrument panel or instrument or both. All interconnecting wires and cables are properly identified with tags.

7.3.2.15.2 Specific Conformance of the Instrumentation and Controls to General Criteria, 10 CFR 50 Appendix A

7.3.2.15.2.1 Criterion 13 - Instrumentation and Controls

ECCS equipment room ventilation instrumentation and controls have been provided to monitor and maintain room temperature within design limits.

7.3.2.16 Additional Design Considerations Analyses

7.3.2.16.1 General Plant Safety Analysis

The examination of the subject ESF system at the plant safety analyses level is presented in Chapter 15 and Appendix 15A.

7.3.2.16.2 Loss of Plant Instrument Air System

Loss of plant instrument air will not negate the subject ESF system safety functions. Refer to Appendix 15A.

7.3.2.16.3 Loss of Cooling Water to Vital Equipment

Loss of cooling water to ECCS, containment and reactor vessel isolation systems and other systems described in this Section when subject to Single Active Component Failure (SACF) or Single Operator Error (SOE) will not result in the loss of sufficient ESF system to negate their safety function. Refer to Appendix 15A.

7.3.2.17 Suppression Pool Cooling (SPC) Mode (RHR) Instrumentation and Controls

7.3.2.17.1 General Functional Requirements Conformance

The suppression pool cooling mode of the RHR system is designed to limit the water temperature in the suppression pool such that the temperature immediately after a blowdown does not exceed the established limit when reactor pressure is above the limit for cold shutdown. During this mode of operation, water is pumped from the suppression pool, through the RHR system heat exchangers, and back to the suppression pool. Thus, the SPC (RHR) maintains the suppression pool as a heat sink for reactor and containment blowdown and source of water for ECCS and containment spray and shutdown cooling.

7.3.2.17.2 Specific Regulatory Requirements Conformance

7.3.2.17.2.1 NRC Regulatory Guides

7.3.2.17.2.1.1 Regulatory Guides 1.6, 1.11, 1.22, 1.29, 1.30, 1.32, 1.47, 1.53, 1.62, 1.63, 1.75, 1.89, 1.97, 1.105, and 1.118

Refer to Subsection 7.3.2.1.2.1; the discussion of conformance to these guides applies to the suppression pool cooling mode (RHR).

7.3.2.17.2.1.2 Regulatory Guide 1.100

All Class 1E equipment will meet the requirements of IEEE Standard 344 and will be environmentally qualified in conformance with Regulatory Guide 1.89, as discussed in Subsections 3.10 and 3.11. All applicable equipment will also be qualified subject to the supplementary requirements of Regulatory Guide 1.100. This provides an adequate basis for complying with the requirements of Regulatory Guide 1.100.

7.3.2.17.2.2 10 CFR 50, Appendix A

7.3.2.17.2.2.1 General Design Criteria 5, 13, 19, 21, 22, 24, 35, 37

Refer to Subsection 7.3.2.1.2.2. The discussion of these criteria applies to the suppression pool cooling mode of RHR.

7.3.2.17.3 Conformance to Industry Codes and Standards

7.3.2.17.3.1 IEEE Standard 279, Criteria for Protection Systems for Nuclear Power Generating Stations

7.3.2.17.3.1.1 General Functional Requirements (IEEE 279, Paragraph 4.1)

7.3.2.17.3.1.1.1 Auto-Initiation

The suppression pool cooling mode of the RHR system has no auto-initiation feature, but is manually initiated from the main control room. Proper and timely system operation is assured with manual initiation, because sufficient time and information is available to the operator. Monitored parameters indicating satisfactory system performance or which would indicate operator error include fluid temperatures, flow, pressure, and valve positions.

7.3.2.17.3.1.1.2 Appropriate Protective Action

The suppression pool cooling instrumentation and controls are used to initiate cooling flow to maintain suppression pool temperatures within established limits.

7.3.2.17.3.1.1.3 Precision

Since suppression pool cooling is manually initiated based on one or more parameters, precision does not strictly apply to this system's control circuitry.

7.3.2.17.3.1.1.4 Reliability

Reliability of the control system is compatible with controlled equipment.

7.3.2.17.3.1.1.5 Performance Under Adverse Conditions

(1) Power Supply Voltage and Frequency

An electrical fault in one division cannot impair proper suppression pool cooling system operation due to the redundant control circuits, each being supplied by different power sources.

(2) Temperature

The suppression pool cooling system is designed to function properly in the high temperature environment expected during the design basis loss- of-coolant accident (LOCA).

(3) Humidity

The system is designed to function properly in the high humidity (steam) environment expected during the design basis LOCA.

(4) Pressure

The system is designed to function properly in the full range of pressures expected during the design basis LOCA.

(5) Vibration

Tolerance to environmentally-induced vibration (earthquake, wind) is discussed in Section 3.10.

(6) Accidents

The system is tolerant to any design basis accident.

(7) Fire

The system is tolerant to a fire in a single division raceway or enclosure.

(8) Explosions

Explosions are not defined in the design basis.

(9) Missiles

The system is tolerant of any single missile destroying no more than one pipe, raceway, or electrical enclosure.

(10) Lightning

The system is tolerant of lightning damage to one auxiliary ac bus.

(11) Flood

All instrumentation and controls are located above flood level or are protected from flood damage.

(12) Earthquake

All control equipment is housed in a Seismic Class I structure. Tolerance to earthquake damage is discussed in Section 3.10.

(13) Wind and Tornado

Tolerance to wind and tornado is discussed in Subsection 7.3.1.2.8.

(14) System Response Time

Response time of the circuitry associated with suppression pool cooling is not critical to plant safety, but is adequate to enable timely operator action. Control circuit time response and valve operation speed in excess of the manufacturer's standard speed in not required because the speed of operation has an insignificant effect on proper and timely system operation.

(15) System Accuracies

The discussion in 7.3.2.17.3.1.1.3 above applies.

(16) Ranges of Monitored Parameters

Instrument sensors and processing equipment are capable of displaying the fullranges of parameters expected during the design basis LOCA.

7.3.2.17.3.1.2 Single Failure Criterion (IEEE 279, Paragraph 4.2)

7.3.2.17.3.1.2.1 Redundancy

Two independent fluid systems are provided, each with the capacity for removing the total design heat load. Two division logic networks are provided: Division 1 logic initiates loop A equipment and Division 2 logic initiates loop B equipment.

Redundancy in equipment and control logic circuitry is provided so that a single failure will not interfere with proper operation of the redundant portions of the system.

7.3.2.17.3.1.2.2 System Performance with Single Failure

Assuming that, in a design basis accident, equipment failures caused by the accident occur simultaineously with the failure of all nonsafety grade and non-qualified equipment, the additional failure of any remaining single component will not impair system operation. Also, system design and testing procedures eliminate the possibility of undetected failures impairing

system function. Instrumentation sensors, trip logic, actuator logic circuitry, and actuated equipment is designed such that the system is tolerant to single failures.

7.3.2.17.3.1.3 Quality of Components (IEEE 279, Paragraph 4.3)

Components used in the suppression pool cooling mode (RHR) have been carefully selected for their specific applications. Ratings have sufficient conservatism to prevent significant deterioration during expected duty over the lifetime of the plant, as illustrated below:

(1) Switch contacts and other logic elements carry no more than 50% of their continuous duty rating.

(2) Controls are “energized to operate” and have infrequent duty cycles.

(3) Motor starters and circuit breakers are effectively derated for motor-starting applications since their nameplate ratings are based on short circuit interruption capabilities and on continuous current-carrying capabilities.

(4) Normal motor starting equipment ratings include allowance for a much greater number of operating cysles thant the application will demand, including testing.

(5) Instrumentation and controls are rated for application in the normal, abnormal, and accident environments in which they are located.

(6) These components are subjected to the manufacturer's normal quality control and undergo functional testing on the panel assembly floor as part of the integrated module test prior to shipment of each panel. Only components which have demonstrated a high degree of reliability and serviceability in other functionally similar applications, or which have been qualified by testing, are selected for use. Additionally, equipment vendors are required to implement and document a quality control and assurance program in accordance with the requirements of 10CFR50, Appendix B.

There are no specific criteria to evaluate conformance with this criterion; however, the intent of the criteria is satisfied.

7.3.2.17.3.1.4 Equipment Qualification (IEEE 279, Paragraph 4.4)

Components of the suppression pool cooling system instrumentation haver undergone qualification testing to evaluate their suitability for reliable service in their installed locations, or have demonstrated reliable operation in similar nuclear power plant installations and industrial applications (see Subsection 3.11).

No component of the control system is required to operate in the drywell environment. Sensory equipment is located outside the drywell and is capable of accurate operation in wide variations of environmental conditions.

7.3.2.17.3.1.5 Channel Integrity (IEEE 279, Paragraph 4.5)

The suppression pool cooling system instrumentation and controls are designed to remain operable under extreme environmental conditions. This is discussed in detail in 7.3.2.17.3.1.1 above.

7.3.2.17.3.1.6 Channel Independence (IEEE 279, Paragraph 4.6)

Channel independence is maintained for all suppression pool cooling control circuitry.

7.3.2.17.3.1.7 Control and Protection System Interaction (IEEE 279, Paragraph 4.7)

The suppression pool cooling mode (SPC) is a safety system and is independent of plant control systems. The requirements of this Paragraph are not applicable.

7.3.2.17.3.1.8 Derivation of System Inputs (IEEE 279, Paragraph 4.8)

The inputs to the interlock circuit for suppression pool cooling flow control are the same as those used in LPCS and LPCI (see Subsections 7.3.1.1.1.5 and 7.3.1.1.1.6).

7.3.2.17.3.1.9 Capability for Sensor Checks (IEEE 279, Paragraph 4.9)

Discussion of checks on sensors used in the interlock circuit are discussed in Subsection 7.3.2.1.2.3.1.9.

Trip units mounted in the control structure are calibrated separately by introducing a calibration source and verifying the setpoint through the use of a digital readout on the trip calibration module.

7.3.2.17.3.1.10 Calibration for Test and Calibration (IEEE 279, Paragraph 4.10)

The suppression pool cooling mode can be tested completely during normal plant operation to verify that each element of the system, active or passive, is capable of performing its intended function. Motor-operated valves can be exercised by the appropriate control logic and starters, and all indications and annunciations can be observed during the test.

7.3.2.17.3.1.11 Channel Bypass or Removal from Operation (IEEE 279, Paragraph 4.11)

Calibration of each sensor will introduce a single instrument channel trip. This does not cause a protective function. Removal of a sensor from operation during calibration does not prevent the redundant instrument channel from functioning if accident conditions occur. By design, the period during which an instrument channel is removed from service for calibration is brief.

7.3.2.17.3.1.12 Operating Bypasses (IEEE 279, Paragraph 4.12)

The suppression pool cooling control system has no operating bypasses; thus, the requirements of these Paragraphs are not applicable.

7.3.2.17.3.1.13 Indication of Bypasses (IEEE 279, Paragraph 4.13)

The suppression pool cooling control system has no operating bypasses; thus, the requirements of these Paragraphs are not applicable.

7.3.2.17.3.1.14 Access to Means for Bypassing (IEEE 279, Paragraph 4.14)

Since there are no bypasses, this criterion is not strictly applicable. However, means of disabling instrumentation and controls is controlled as follows:

(1) Access to instrument valves is controlled administratively.

(2) Emergency switchgear rooms are lockable.

7.3.2.17.3.1.15 Multiple Setpoints (IEEE 279, Paragraph 4.15)

There are no multiple trip settings.

7.3.2.17.3.1.16 Completion of Protective Action Once Initiated (IEEE 279, Paragraph 4.16)

The final control elements for the suppression pool cooling system are essentially bi-stable; for example, motor-operated valves stay open once they have reached their open position even after the motor starter drops out. Thus, once initiated an action will go to completion.

7.3.2.17.3.1.17 Manual Initiation (IEEE 279, Paragraph 4.17)

Suppression pool cooling is manually-initiated.

7.3.2.17.3.1.18 Access to Setpoint Adjustments (IEEE 279,Paragraph 4.18)

The suppression pool cooling system is manually initiated and secured. The only setpoints are those associated with LPCS and LPCI initiation (see Subsection 7.3.2.1.2.3.1.18).

7.3.2.17.3.1.19 Identification of Protective Actions (IEEE 279, Paragraph 4.19)

The suppression pool cooling system is manually initiated and secured. The only protective actions are those associated with LPCS and LPCI as discussed in Subsection 7.3.2.1.2.3.1.19.

7.3.2.17.3.1.20 Information Readout (IEEE 279, Paragraph 4.20)

Continuous-reading indications are provided to enable the operator to verify proper system operation. The design minimizes the possibility of confusion due to erroneous indications.

7.3.2.17.3.1.21 System Repair (IEEE 279, Paragraph 4.21)

The suppression pool cooling system is designed for efficient maintainability. Easy recognition of malfunctioning equipment is provided through proper test procedures. Accessibility is provided for the sensors and controls to facilitate repair or adjustment.

7.3.2.17.3.1.22 Identification (IEEE 279, Paragraph 4.22)

Colored nameplates identify each logic cabinet and instrument panel that is part of the suppression pool cooling mode (RHR) system. The nameplates also indicate the division to which each panel or cabinet is assigned. Panels in the main control room are identified by tags which indicate the system and logic contained therein. Identification of safety related equipment is discussed in Subsection 8.3.1.3.

7.3.2.17.3.2 IEEE Standard 308

Class 1E electrical loads in the suppression pool cooling (RHR) instrumentation and control system are physically separated and electrically isolated into independent load groups. A failure in one group will not interfere with proper operation of the redundant potions of the systems. Details of the Class 1E power system are discussed in Chapter 8.

7.3.2.17.3.3 IEEE Standard 323

Refer to Subsection 3.11 for a discussion of system compliance to this standard.

7.3.2.17.3.4 IEEE Standard 338

The capability for testing the suppression pool cooling instrumentation and control system is discussed in Subsections 7.3.2.17.3.1.9 and 7.3.2.17.3.1.10.

7.3.2.17.3.5 IEEE Standard 344

Refer to Section 3.10 for a discussion of system compliance of this standard.

7.3.2.18 CGCS Equipment Cubicle Cooling System

7.3.2.18.1 Conformance with General Functional Requirements

General Functional Requirements for the CGCS Equipment Cubicle Cooling System are discussed in Subsection 9.4.5.5.

7.3.2.18.2 Conformance with Specific Regulatory Requirements

7.3.2.18.2.1 Conformance with 10 CFR 50 General Design Criteria

General Design Criteria, established in Appendix A of 10 CFR 50, which are generally applicable to all ESF systems, are discussed in Subsection 7.1.2.7. Those with specific impact on the CGCS Equipment Cubicle Cooling System are described in this section.

Criterion 13: Instrumentation and Control

CGCS Equipment Cubicle Cooling System instrumentation and controls for each train have been provided to monitor and maintain room temperature below a predetermined value.

7.3.2.18.2.2 Conformance to IEEE Standard 279

The CGCS Equipment Cubicle Cooling System is designed to conform to the requirements of Section 4 of IEEE Standard 279, Criteria for Protection Systems for Nuclear Power Generating Stations, as described below.

7.3.2.18.2.2.1 General Functional Requirements (IEEE 279, Paragraph 4.1)

Instrumentation and controls are provided for each of the redundant CGCS Equipment Cubicle Cooling System trains. The trains are interlocked to start up automatically upon the start of the respective CGCS equipment. The trains can also be started manually from the local control panel.

7.3.2.18.2.2.2 Single Failure Criterion (IEEE 279, Paragraph 4.2

Independent instrumentation and controls are provided for each train. Single failure of the instrumentation and controls associated with one train will not affect the safety-related function of the other train.

7.3.2.18.2.2.3 Quality of Components and Modules (IEEE 279, Paragraph 4.3)

Components used in the CGCS Equipment Cubicle Cooling System have been carefully selected on the basis of suitability for the specific application.

A quality assurance program is required to be implemented and documented by equipment vendors with the intent of complying with the requirements set forth in 10 CFR 50, Appendix B.

7.3.2.18.2.2.4 Equipment Qualification (IEEE 279, Paragraph 4.4)

The nuclear safety-related instrumentation and controls for the CGCS Equipment Cubicle Cooling System are qualified by type test and/or analyses to meet the performance requirements.

7.3.2.18.2.2.5 Channel Integrity (IEEE 279, Paragraph 4.5)

Instrumentation and controls for the CGCS Equipment Cubicle Cooling System are qualified to maintain their functional capability under extreme conditions specified in the design environmental parameters. Loss or damage to any one channel will not prevent the action of the redundant channel.

7.3.2.18.2.2.6 Channel Independence (IEEE 279, Paragraph 4.6)

The CGCS Equipment Cubicle System instrument and control channels are independent from each other. Electrical and mechanical separation is maintained between the instrumentation and controls of the redundant trains, and no interface exists between the control channels.

7.3.2.18.2.2.7 Control and Protection System Interaction (IEEE 279, Paragraph 4.7)

Instruments and controls for the CGCS Equipment Cubicle Cooling System provide only control function. There is no interaction with the protection system.

7.3.2.18.2.2.8 Derivation of System Inputs (IEEE 279, Paragraph 4.8)

The signals which are used for input to the CGCS Equipment Cubicle Cooling System are direct measures of desired variable parameters.

7.3.2.18.2.2.9 Capability for Sensor Checks (IEEE 279, Paragraph 4.9)

The sensors which are used for input to the CGCS Equipment Cubicle Cooling System can be checked one at a time by application of simulated signals during normal plant operation.

7.3.2.18.2.2.10 Capability for Test and Calibration (IEEE 279, Paragraph 4.10)

The instruments and controls for the CGCS Equipment Cubicle Cooling System are located such that they are accessible for periodic testing and calibration during normal plant operation or shutdown.

7.3.2.18.2.2.11 Channel Bypass or Removal from Operation (IEEE 279, Paragraph 4.11)

Either train may be shut down for maintenance, test or calibration by placing the control switch in the pull-to-lock position without affecting the operation of the other train.

7.3.2.18.2.2.12 Operating Bypasses (IEEE 279, Paragraph 4.12)

The automatic start of the CGCS Equipment Cubicle Cooling System can be bypassed by pull-to-lock selection of the train control switch.

7.3.2.18.2.2.13 Indication of Bypasses (IEEE 279, Paragraph 4.13)

The pull-to-lock control switch selection for each train causes all corresponding indicating lights to go out.

7.3.2.18.2.2.14 Access to Means for Bypassing (IEEE 279, Paragraph 4.14

The control switch for each fan is located on local control panels and is under administrative control.

7.3.2.18.2.2.15 Multiple Setpoints (IEEE 279, Paragraph 4.15)

This does not apply because the setpoints are fixed and administratively controlled.

7.3.2.18.2.2.16 Completion of Protective Action Once it is Initiated (IEEE 279, Paragraph 4.16)

There are no protective interlocks in the system.

7.3.2.18.2.2.17 Manual Initiation (IEEE 279, Paragraph 4.17)

The system is capable of being initiated manually, on the train level, from the local control panel.

7.3.2.18.2.2.18 Access to Setpoint Adjustments, Calibration, and Test Points (IEEE 279, Paragraph 4.18)

Access to setpoint adjustments, calibrations, and test points are under administrative control.

7.3.2.18.2.2.19 Identification of Protective Actions (IEEE 279, Paragraph 4.19)

Not applicable based on Subsection 7.3.2.18.2.2.16.

7.3.2.18.2.2.20 Information Readout (IEEE 279, Paragraph 4.20)

Each train is provided with local panel indicating lights and alarms showing the fan status. Fan-coil unit differential pressure is provided locally.

7.3.2.18.2.2.21 System Repair (IEEE 279, Paragraph 4.21)

The CGCS Equipment Cubicle Cooling System instrumentation and controls are located to facilitate the recognition, location, replacement, repair, or adjustment of any malfunctioning instrument(s).

7.3.2.18.2.2.22 Identification (IEEE 279, Paragraph 4.22)

Nameplates identify the electrical separation division for each instrument panel or instrument or both. All interconnecting wires and cables are properly identified with tags.

7.3.2.19 Reactor Core Isolation Cooling System

This system is discussed in Section 7.4.2.1.

7.3.2.20 Feedwater Leakage Control Mode (RHR) - Instrumentation and Controls

7.3.2.20.1 General Functional Requirement Conformance

Initiation of the FWLC diverts water from RHR to the feedwater lines to provide a seal at the outboard feedwater isolation check valves (1B21-FO32A/B) and gate valves (1B21-FO65A/B) after a DBA LOCA to prevent the release of containment atmosphere through the feedwater piping release path. The FWLC mode of RHR can be operated simultaneously with RHR LPCI, suppression pool cooling, or containment spray cooling modes.

7.3.2.20.2 Specific Regulatory Requirements Conformance

7.3.2.20.2.1 Regulatory Guide Conformance

7.3.2.20.2.1.1 Regulatory Guide 1.6

The two loops of FWLC are powered from separate divisional emergency AC-power sources.

7.3.2.20.2.1.2 Regulatory Guide 1.29

All instrumentation and controls required to complete the safety function are tested and qualified to meet Seismic Category I requirements and will be functional after a seismic event.

7.3.2.20.2.1.3 Regulatory Guide 1.30

The quality assurance requirements of IEEE 336 are applicable during the plant design and construction phases (see Section 7.1) and will also be implemented as an operational QA program during plant operation in response to Regulatory Guide 1.30.

7.3.2.20.2.1.4 Regulatory Guide 1.32

Both divisions of FWLC are powered from Class 1E safety-related busses.

7.3.2.20.2.1.5 Regulatory Guide 1.47

Conformance to Regulatory Guide 1.47 is discussed in Sections 7.1.2.6.11 and 8.1.6.1.9.

7.3.2.20.2.1.6 Regulatory Guide 1.53

The system is designed with two independent and redundant portions to ensure that no single failure can prevent the safety function.

7.3.2.20.2.1.7 Regulatory Guide 1.75

The instrumentation and control devices and power supplies for each subsystem are completely separated and independent. Separate and independent raceways are routed from devices to the respective subsystem enclosure. The system conduit groupings comply with the requirements of this regulatory guide. Redundant subsystems are on separate and independent main control room panels. Optical isolators provide electrical isolation between the FWLC valve limit switches and the non-safety plant computer.

7.3.2.20.2.1.8 Regulatory Guide 1.89

The FWLC cables are environmentally qualified for the harsh areas in which they are located. All other instrumentation and controls components are located in mild environmental areas and therefore do not require environmental qualification.

7.3.2.20.2.1.9 Regulatory Guide 1.97

See Subsection 7.1.2.6.23 and Table 7.1-13, parameter B10, for the degree of conformance regarding primary containment isolation valve position.

7.3.2.20.2.1.10 Regulatory Guide 1.100

See Section 3.10 for discussion of the degree of conformance.

7.3.2.20.2.1.11 Regulatory Guide 1.105

See Subsection 7.1.2.6.25 for discussion of the degree of conformance.

7.3.2.20.2.1.12 Regulatory Guide 1.118

See Subsection 7.1.2.6.26 for discussion of the degree of conformance.

7.3.2.20.2.2 Conformance to 10 CFR 50, Appendix A General Design Criteria

(1) Criterion 13 - Instrumentation and indicators are provided to monitor the position of the FWLC valves.

(2) Criterion 19 - Controls and instrumentation (position indication) are provided in the main control room for the FWLC valves.

7.3.2.20.3 Conformance to Industry Standards

7.3.2.20.3.1 Conformance to IEEE 279 - Criterion for Protection Systems for Nuclear Power Generating Stations

7.3.2.20.3.1.1 General Functional Requirement (IEEE 279, Paragraph 4.1)

The FWLC mode is a manually operated system and therefore has no automatic initiation. The FWLC valves, however will automatically close upon loss of any of the permissives described in Section 7.3.1.1.19.6.

7.3.2.20.3.1.2 Single Failure Criterion (IEEE 279, Paragraph 4.2)

The FWLC mode consists of two separate loops. The two loops feature separate and independent sets of controls and instrumentation which meet the single failure criterion.

7.3.2.20.3.1.3 Quality of Components and Modules (IEEE 279, Paragraph 4.3)

Components used in FWLC mode have been carefully selected on the basis of suitability for the specific application.

A quality assurance program is required to be implemented and documented by equipment vendors with the intent of complying with requirements set forth in 10 CFR 50, Appendix B.

7.3.2.20.3.1.4 Equipment Qualification (IEEE 279, Paragraph 4.4)

No components of the FWLC mode are located inside containment. With the exception of the cabling, all instrumentation and controls equipment is located in mild environments. The FWLC essential components meet the equipment requirements described in Sections 3.10 and 3.11.

7.3.2.20.3.1.5 Channel Integrity (IEEE 279, Paragraph 4.5)

The FWLC mode is designed to maintain its functional capability under the environmental conditions, electrical transients, and malfunctions that may occur in the design basis LOCA.

7.3.2.20.3.1.6 Channel Independence (IEEE 279, Paragraph 4.6)

Channel independence for sensors is provided by electrical and mechanical separation. The two loops of FWLC are on opposite sides of the steam tunnel and power is supplied from divisionally separated cables and sources.

7.3.2.20.3.1.7 Control and Protection System Interaction (IEEE 279, Paragraph 4.7)

The FWLC mode is a safety system and is independent of plant control systems. The requirements of this Paragraph are not applicable.

7.3.2.20.3.1.8 Derivation of System Inputs (IEEE 279, Paragraph 4.8)

The inputs to the FWLC permissives are derived from signals that are direct measures of the desired variables. The pressure signals are from pressure switches mounted on the feedwater side of the FWLC valves. The valve position signals from valves IB21-FO65A/B are from limit switches on the valve operator.

7.3.2.20.3.1.9 Capability for Sensor Checks (IEEE 279, Paragraph 4.9)

Testing of the pressure switches will be performed in reactor modes 4 or 5.

7.3.2.20.3.1.10 Capability for Test and Calibration (IEEE 279, Paragraph 4.10)

The FWLC mode will be tested in reactor modes 4 or 5.

7.3.2.20.3.1.11 Channel Bypass or Removal from Operation (IEEE 279, Paragraph 4.11)

The FWLC valves are operator initiated valves that are normally closed. The only automatic feature is the permissive which would close the valves if permissives are not met. Calibration, testing and maintenance of the pressure switches including breaker maintenance, overload bypass, etc., is not planned during normal operation.

7.3.2.20.3.1.12 Operating Bypasses (IEEE 279, Paragraph 4.l2)

The FWLC mode has no operating bypasses.

7.3.2.20.3.1.13 Indication of Bypasses (IEEE 279, Paragraph 4.13)

The FWLC mode has no operating bypasses. All motor control center control circuits related to engineered safety feature systems are individually monitored. If control voltage is lost as a result of tripping of a motor starter feeder breaker or removal of a fuse in the control circuit (rendering the valve inoperable), indication is provided in the control room.

7.3.2.20.3.1.14 Access to Means for Bypassing (IEEE 279, Paragraph 4.14)

The FWLC mode has no operating bypasses.

7.3.2.20.3.1.15 Multiple Set Points (IEEE 279 Paragraph 4.15)

There are no multiple trip settings for the FWLC mode.

7.3.2.20.3.1.16 Completion of Protective Action Once It Is Initiated (IEEE 279, Paragraph 4.16)

The FWLC mode is manually initiated. The FWLC mode will remain in continuous operation after system initiation unless manually terminated, or one of the motor operated valve permissives is lost.

7.3.2.20.3.1.17 Manual Initiation (IEEE 279, Paragraph 4.17)

The FWLC mode is a manually-initiated function.

7.3.2.20.3.1.18 Access to Set Point Adjustments, Calibration, and Test Points (IEEE 279, Paragraph 4.18)

The FWLC mode is manually initiated and secured. The only setpoints are those associated with the pressure switch permissive. Setpoint check/adjustments will be performed during the calibration process in reactor modes 4 or 5.

7.3.2.20.3.1.19 Identification of Protective Actions (IEEE 279, Paragraph 4.l9)

FWLC mode initiation is indicated by position indication in the main control room of the two FWLC motor operated valves.

7.3.2.20.3.1.20 Information Readout (IEEE 279, Paragraph 4.20)

FWLC mode initiation is indicated by position indication in the main control room of the two FWLC motor operated valves.

7.3.2.20.3.1.21 System Repair (IEEE 279, Paragraph 4.21)

The FWLC mode is designed for efficient maintainability. Easy recognition of malfunctioning equipment is provided through proper test procedures.

7.3.2.20.3.1.22 Identification (IEEE 279, Paragraph 4.22)

Colored nameplates identify the two MCCs that are part of the FWLC mode. The nameplates also indicate the division to which MCCs are assigned. Panels in the main control room are identified by tags which identify the FWLC valves. Identification of safety related equipment is discussed in Subsection 8.3.1.3.

7.3.2.20.3.2 Conformance to IEEE 308 - Standard Criteria for Class 1E Electric Systems

Class 1E loads are physically separated and electrically isolated into independent load groups, including the instrumentation and controls used in the FWLC mode of the RHR system. A failure in one loop will not interfere with proper operation of the redundant loop. Details of the Class 1E power system are discussed in Chapter 8.

7.3.2.20.3.3 Conformance to IEEE 323 - Standard for Qualifying Class 1E Equipment for Nuclear Power Generating Stations

The class 1E equipment qualification is demonstrated by the vendor or others by type tests on actual equipment in accordance with the purchase specification. Qualification documentation is maintained to verify that the equipment is qualified. (See Section 3.11.)

7.3.2.20.3.4 Conformance to IEEE 336 - Installation, Inspection, and Testing Requirements for Instrumentation and Electrical Equipment During the Construction of Nuclear Power Generating Stations

The IEEE 336 requirements for installation, inspection and testing of Class 1E instrument and control equipment and systems during construction have been met through a quality assurance program. See Chapter 17 for specific details of the program.

7.3.2.20.3.5 Conformance to IEEE 338 - Standard Criteria for Periodic Testing of Nuclear Power Generating Station Safety Systems

The FWLC instrumentation and controls will be tested in reactor modes 4 or 5.

7.3.2.20.3.6 Conformance to IEEE 344 - Recommended Practices for Seismic Qualification of Class 1E Equipment for Nuclear Power Generating Stations

The safety-related equipment for FWLC is classified as Seismic Category 1. (Refer to Section 3.10).

7.3.2.20.3.7 Conformance to IEEE 379 - Standard Application of the Single-Failure Criterion to Nuclear Power Generating Station Class 1E System

The FWLC mode consists of two separate loops. The two loops feature separate and independent sets of controls and instrumentation which meet the single failure criterion.

7.3.2.20.3.8 Conformance to IEEE 384 - Standard Criteria for Independence of Class 1E Equipment and Circuits

See Section 7.1.2.5.9 for conformance to IEEE 384.

Table 7.3-1 through Table 7.3-6 have been deleted.

TABLE 7.3-7
INSTRUMENT CHANNEL REQUIRED FOR CONTAINMENT AND REACTOR VESSEL ISOLATION CONTROL SYSTEM

I. MSIV and Main Steam Line Drain Isolation

Instrument Channel Description	Normal
Reactor Vessel Low Water Level (Level 1 Setting)	4
Main Steam Line High Radiation	4
Main Steam Line High Flow (each steam line)	4
Main Steam Line Low Pressure	4
Main Condenser Low Vacuum	4
Main Steam Line Area High Temperature	4 ambient 4 differential
Main Steam Line Area High Temp - Turbine Bldg.	4

The normal column shows the number of instrument channels provided to monitor each variable required for the functional performance of CRVICS (MSIV MS drain valve isolation only).

TABLE 7.3-7
INSTRUMENT CHANNEL REQUIRED FOR CONTAINMENT AND REACTOR VESSEL ISOLATION CONTROL SYSTEM (Continued)

II. CRVICS (General)

Instrument Channel Description	Normal Total
Reactor Vessel Low Water Level (Level 3)	4
Reactor Vessel Low Water Level (Level 2)	4
Main Steam Line High Radiation (shared with MS line isolation logic)	4
Reactor High Pressure	4
Drywell High Pressure	4
Containment Exhaust High Radiation	4
Reactor Water Cleanup System Differential Flow	2
Reactor Water Cleanup Equipment Area Temperatures (2 per room)	10 ambient 10 differential
RHR Equipment Area Temperatures (2 per room)	4 ambient 4 differential
RCIC High Steam Flow	4
RCIC Equipment Area Temperatures	2 ambient 2 differential
Main Steam Line Tunnel Area Temperatures (2 ambient and 2 differential are shared with MS line isolation logic)	4 ambient 4 differential

The "normal" column lists the number of instrument channels provided to monitor each variable required for the functional performance CRVICS.

TABLE 7.3-8
TRIP CHANNELS REQUIRED FOR FUNCTIONAL PERFORMANCE OF HPCS SYSTEM

Component Affected	Trip Channel	Instrument	Channels Provided
HPCS system initiation	Reactor Vessel low water level	Level transmitter	4
HPCS system initiation	Drywell high pressure	Pressure transmitter	4
Suppression pool suction valve	RCIC storage tank low level	Level transmitter	2
Suppression pool suction valve	Suppression pool high level	Level transmitter	2

TABLE 7.3-9
TRIP CHANNELS REQUIRED FOR FUNCTIONAL PERFORMANCE OF AUTOMATIC DEPRESSURIZATION SYSTEM

Initiating Function	Instrument	Channels Provided
Reactor Vessel Low Water Level (Level 1)	Level transmitter and trip unit	2/trip system
Reactor Vessel Low Water Level (Level 3) - Confirmatory	Level transmitter and trip unit	1/trip system
Drywell high pressure	Pressure transmitter and trip unit	2/trip system
LPCI permissive	Pressure transmitter and trip unit	6 total
Time delay	Solid State digital timer	3/trip system
LPCS permissive	Pressure transmitter and trip unit	2 total

LPCS interlocks only with Division 1, but RHR interlocks both divisions of ADS

TABLE 7.3-10
TRIP CHANNELS REQUIRED FOR FUNCTIONAL PERFORMANCE OF LPCI "B" AND "C"

Component Affected	Trip Channel	Instrument	Channels Provided
LPCI initiation (B and C loops)	Reactor vessel low water level	Level transmitter & trip unit	2
LPCI initiation (B and C loops)	Drywell high pressure	Pressure transmitter & trip unit	2
Minimum flow bypass valves (B and C loops)	LPCI pumps discharge low flow	Flow transmitter & trip unit	2 (1/pump)
LPCI injection valve permissive (B and C loops)	Reactor vessel pressure	Pressure transmitter & trip unit	4*

* 4 trip units, 2 pressure transmitters

TABLE 7.3-11
TRIP CHANNELS REQUIRED FOR FUNCTIONAL PERFORMANCE OF LPCS SYSTEM AND LPCI "A"

Component Affected	Trip Channel	Instrument	Channels Provided
LPCS and LPCI A initiation	Reactor vessel water level	Level transmitter	2
LPCS and LPCI A initiation	Drywell high pressure	Pressure transmitter	2
Minimum flow valves (LPCS and LPCI A)	LPCI or LPCS pumps discharge low	Flow transmitter	2 (1/pump)
LPCS and LPCI "A" injection valve permissive	Reactor vessel pressure	Pressure transmitter and trip unit	4*

* 4 trip units, 2 pressure transmitters

7.4 SYSTEMS REQUIRED FOR SAFE SHUTDOWN

7.4.1 Description

7.4.1.1 Reactor Core Isolation Cooling (RCIC) System - Instrumentation and Controls

7.4.1.1.1 System Identification

7.4.1.1.1.1 Function

The Reactor Core Isolation Cooling System consists of a turbine, pump, piping, valves, accessories, and instrumentation designed to assure that sufficient reactor water inventory is maintained in the reactor vessel thus assuring continuity of core cooling. Reactor vessel water is maintained or supplemented by the RCIC during the following conditions:

(1) When the reactor vessel is isolated and yet maintained in the hot standby condition;

(2) When the reactor vessel is isolated and accompanied by a loss of normal coolant flow from the reactor feedwater system;

(3) When a complete plant shutdown under conditions of loss of normal feedwater system is started but before the reactor is depressurized to a level where the reactor shutdown cooling mode of the RHR system can be placed into operation.

(4) When a design basis control rod drop accident occurs, the RCIC System can be used in conjunction with the HPCS System and together with the latter meets single failure criteria in mitigating the consequences of this event. (RCIC System is an engineered safety feature for this event.)

7.4.1.1.1.2 Classification

Electrical components for the RCIC system are classified as Safety Class 2 and Seismic Category I.

7.4.1.1.2 Power Sources

The RCIC logic is powered by the 125 vdc Division 1 system, except the inboard isolation valves logic which is powered by the 125 vdc Division 2 system. Motive power for inboard isolation valves is by Division 2 standby ac power, while outboard isolation valves are driven by Division 1 standby ac power. The remaining valves are driven by the Division 1 dc system.

7.4.1.1.3 Equipment Design

7.4.1.1.3.1 General

When actuated, the RCIC system pumps water from either the RCIC storage tank or the suppression pool to the reactor vessel. The RCIC system includes one turbine-driven pump, one gland seal system dc powered air compressor, automatic valves, control devices for this equipment, sensors and logic circuitry. The arrangement of equipment and control devices is shown in Drawing M05-1079 (RCIC P&ID).

Level transmitters used for the initiation and tripping and pressure transmitters for isolation of the RCIC system are located on instrument panels outside the drywell but inside the containment. The only operating components of the RCIC system that are located inside the drywell are the inboard steam line isolation valve, the steam line warmup line isolation valve, and one testable check valve on the pump discharge line.

Cables connect the sensors to control circuitry in the main control room. The rest of the RCIC system control and instrumentation components are located in the auxiliary building.

A design flow functional test of the RCIC system can be performed during normal plant operation by drawing suction from the RCIC storage tank and discharging through a full flow test return line to the RCIC storage tank. The discharge valve to the reactor remains closed during the test, and reactor operation remains undisturbed. All components of the RCIC system (except 1E51-F066) are capable of individual functional testing during normal plant operation. The control system provides automatic return from test to operating mode if system initiation is required. There are three exceptions:

(1) The flow controller in manual mode. This feature is required for operation flexibility during system operation.

(2) Steam inboard/outboard isolation valves closed. Closure of either or both of these valves requires operator action to properly sequence their opening. An alarm sounds when either of these valves leaves the fully open position.

(3) If breakers have been manually racked out-of-service.

7.4.1.1.3.2 Initiating Circuits

Reactor vessel low water level is monitored by four level transmitters that sense the difference between the pressure to a constant reference leg of water and the pressure due to the actual height of water in the vessel. Each transmitter supplies a signal to analog comparator trip units that energize control logic. The analog comparator trip units are located in the main control room. The instrument sensing lines for the transmitters are physically separated from each other and tap off the reactor vessel at widely separated points.

The RCIC system is initiated automatically by a reactor vessel low water level signal utilizing a one-out-of-two twice logic and produces the design flow rate within 30 seconds. The system will provide design makeup water flow to the reactor vessel until the amount of water delivered to the reactor vessel is adequate to restore vessel level, at which point the RCIC system automatically shuts down. The controls are also provided to allow remote manual startup, operation, and shutdown, provided initiation or shutdown signals do not exist.

The RCIC turbine is controlled as shown in drawing E02-1RI99. The turbine governor limits the turbine speed and adjusts the turbine steam control valves so that design pump discharge flow rate is obtained. The flow signal used for automatic control of the turbine is derived from a differential pressure measurement across a flow element in the RCIC system pump discharge line.

The turbine is shut down by tripping the turbine trip and throttle valve closed if any of the following conditions are detected:

(1) Turbine overspeed

(2) High turbine exhaust pressure

(3) RCIC isolation signal from logic "A" or "B"

(4) Low pump suction pressure

(5) Manual trip actuated by the operator.

Turbine overspeed indicates a malfunction of the turbine control mechanism. High turbine exhaust pressure indicates a condition that threatens the physical integrity of the exhaust line. Low pump suction pressure warns that cavitation and lack of cooling can cause damage to the pump which could place it out of service. A turbine trip is initiated for these conditions so that if the causes of the abnormal conditions can be found and corrected, the system can be quickly restored to service. The trip settings are selected so that a spurious turbine trip is unlikely, but not so that damage occurs before the turbine is shut down. Turbine overspeed is detected by a standard turbine overspeed mechanical device. Two pressure sensors are used to detect high turbine exhaust pressure; either sensor can initiate turbine shutdown. Two pressure sensors are used to detect low RCIC system pump suction pressure.

A high reactor water level signal initiates the closure of the steam supply valve, rather than the turbine trip valve, to shut off steam to the turbine. Closure of the steam supply valve places the RCIC system in a standby configuration until a low reactor water level initiation signal reinstates system operation.

High water level in the reactor vessel indicates that the RCIC system has performed satisfactorily in providing makeup water to the reactor vessel. Further increase in level could result in RCIC system turbine damage caused by gross carry-over of moisture. The reactor vessel high water level setting is near the top of the steam separators and is sufficient to prevent gross moisture carry-over to the turbine. Two level transmitters and associated trip units which sense differential pressure are arranged to require that both trip units trip to initiate a steam supply valve closure.

7.4.1.1.3.3 Logic and Sequencing

The scheme used for initiating the RCIC system is shown in drawing E02-1RI99.

7.4.1.1.3.4 Bypasses and Interlocks

To prevent the turbine pump from being damaged by overheating at reduced RCIC pump discharge flow, a pump discharge bypass is provided to route the water discharged from the pump back to the suppression pool.

The bypass is controlled by an automatic, dc motor-operated valve whose control scheme is shown in drawing E02-1RI99. The valve is closed at high flow or when either the steam supply or turbine trip valves are closed. Low flow combined with high pump discharge pressure opens the valve.

To prevent the RCIC steam supply pipeline from filling up with water and cooling excessively, a condensate drain pot, steam line drain, and appropriate valves are provided in a drain pipeline arrangement just upstream of the turbine supply valve. The control scheme is shown in drawing E02-1RI99. The controls position valves so that during normal operation steam line drainage is routed to the main condenser. The water level in the steam line drain condensate pot is normally maintained by a steam trap which is open to the main condenser. In addition, the water level in the steam line drain condensate pot is controlled by a level switch and a direct acting solenoid bypass valve which energizes to allow condensate to flow out of the drain pot. Upon receipt of an RCIC initiation signal, the drainage path is isolated.

To prevent the turbine exhaust line from filling with water, a condensate drain pot is provided. The water in the turbine exhaust line condensate drain pot is routed to the RCIC pump room floor drain sump. The water level in the turbine exhaust line condensate drain pot is controlled by a level switch which, upon sensing high water level, opens the drain valve and allows condensate to flow to the Auxiliary Building Floor Drain system. RCIC initiation causes the condensate drainage line to be isolated. The control logic is shown in drawing E02-1RI99.

During test operation, the RCIC pump discharge is routed to the RCIC storage tank. Two dc motor-operated valves are installed in the pump discharge to the RCIC storage tank pipeline. The arrangement is shown in Drawing M05-1079 (RCIC P&ID). Upon receipt of an RCIC initiation signal, the valves close as is shown in drawing E02-1RI99. Valves for the pump suction from the RCIC storage tank and the test discharge to the RCIC storage tank valves are automatically closed or interlocked closed if the suppression pool suction valve is fully closed. Numerous indications pertinent to the operation and condition of the RCIC are available to the main control room operator. Drawing E02-1RI99 shows the various indications provided.

To reduce the potential possibility for moisture ingestion by the main and feedwater turbines during RCIC system operation, RCIC will issue a trip signal. If the RCIC injection valve is not fully closed, and if the RCIC pump flow is greater than a minimum set point, then a trip signal is generated to trip the main turbine and the feedwater turbines.

7.4.1.1.3.5 Redundancy and Diversity

On a network basis, the HPCS is redundant to RCIC for the safe shutdown function. Therefore, RCIC as a system by itself is not required to be redundant, although the instrument channels are redundant for operational availability purposes. While no initiating-signal diversity exists within this system, there does exist system level diversity between RCIC and HPCS for plant conditions identified in Chapter 15.

Diversity of initiating signals is a requirement stipulated only for RPS, ECCS, and Containment Isolation systems. Therefore, diversity of initiating circuits is not employed for the RCIC system.

The RCIC is actuated by reactor low water level. Four level sensors in a one-out-of-two twice circuit supply this signal.

7.4.1.1.3.6 Actuated Devices

All automatic valves in the RCIC are equipped with remote-manual capability, so that the entire system can be operated from the main control room. Motor operated valves are equipped with limit and torque switches. In the opening direction, limit switches turn off the motors when movement is complete. In the closing direction, torque switches turn the motor off (except for

double disc valve, which is turned off by limit switch) when the valve has properly seated. Thermal overload devices may temporarily be placed in service during testing, maintenance or valve repositioning during routine operation. All motor and air operated valves provide main control room indication of valve position. The system is capable of initiation independent of auxiliary ac power.

To assure that the RCIC can be brought to design flow rate within 30 seconds from the receipt of the initiation signal, essential RCIC valves have the maximum operating times given in Subsection 5.4.6.2.2.2 item 4.

The operating time is the time required for the valve to travel from the fully closed to the fully open position, or vice versa. The two RCIC steam supply line isolation valves are normally open and they are designed to isolate the RCIC steam line in the event of a break in that line. These valves are operated by ac motors powered from different ac sources and automatically close after a 8-second time delay on receipt of an isolation signal. One normally closed dc motor-operated valve is located in the turbine steam supply pipeline. This is the turbine steam admission valve. The flow coefficient profile for the turbine steam admission valve is designed to bring the turbine to idle speed, prior to bringing the turbine to normal operating speed. The control scheme for these valves are shown in drawing E02-1RI99. Upon receipt of a RCIC initiation signal these valves open and remain open until closed by operator action from the main control room.

The instrumentation for isolation consists of the following:

Outboard RCIC Turbine Isolation Valve.

(1) Ambient temperature switches-RCIC equipment area high temperature.

(2) Ambient temperature switch-RCIC pipe routing area (main steam line pipe tunnel) high temperature.

(3) Differential pressure transmitter and trip unit-drywell RCIC steamline or auxiliary building RCIC steamline high flow or instrument line break.

(4) A 8-second time delay break detection logic circuit.

(5) Two pressure transmitters and trip units-RCIC turbine exhaust diaphragm high pressure. Both trip units must activate to isolate.

(6) Pressure transmitter and trip unit-RCIC steam supply pressure low.

(7) Manual isolation if the system operation has been initiated.

Inboard RCIC Turbine Isolation Valve.

(1) Except for the manual isolation feature, a similar set of instrumentation causes the inboard valve to isolate.

Two pump suction valves are provided in the RCIC system. One valve lines up pump suction from the RCIC storage tank; the other one from the suppression pool. The RCIC storage tank is the preferred source. Both valves are operated by dc motors. The control arrangement is

shown in drawing E02-1RI99. Upon receipt of an RCIC initiation signal, the RCIC storage tank suction valve automatically opens. RCIC storage tank low water level or suppression pool high water level automatically opens the suppression pool suction valve. Moving this valve from the fully closed position automatically closes the RCIC storage tank suction valve.

One dc motor-operated RCIC pump discharge valve in the pump discharge pipeline is provided. The control scheme for this valve is shown in drawing E02-1RI99. This valve is arranged to open upon receipt of the RCIC initiation signal and closes automatically upon receipt of a turbine trip signal.

7.4.1.1.3.7 Separation

As in the emergency core cooling system, the RCIC system is separated into divisions designated 1 and 2. The RCIC is a Division 1 system, but the inboard steam line isolation valve, the steam line warmup line isolation valve, the inboard vacuum breaker isolation valve, the inboard turbine exhaust drain isolation valve, and the inboard steam supply drain isolation valve are Division 2; therefore, part of the RCIC logic is Division 2. The inboard and outboard steam supply line isolation valves, the steam line warmup line isolation valve and the inboard and outboard vacuum breaker isolation valves are ac powered valves. The rest of the valves are dc powered valves. In order to maintain the required separation, RCIC trip channel and logic components, instruments and manual controls are mounted so that separation from Division 2 is maintained.

All power and signal cables and cable trays are clearly identified by division.

The auxiliary systems that support the RCIC system are: the gland seal system (which prevents turbine steam leakage) and the lube oil cooling water system. An RCIC initiation signal activates the gland seal compressor and opens the cooling water supply valve therefore initiating the gland seal and lube oil cooling functions. These systems remain on until manually turned off. The water leg pump maintains water in RCIC pump suction line. The water-leg pump is continuously running and derives its power from the standby ac power source.

Safety-related power and signal cables, cable trays and instrument panels are specified in accordance with the requirements of Regulatory Guide 1.75.

7.4.1.1.3.8 Testability

The RCIC may be tested to design flow during normal plant operation. The system is designed to return to the operating mode if system initiation is required during testing as discussed in section 7.4.1.1.3.1. Water is drawn from the RCIC storage tank and discharged through a full flow test return line to the RCIC storage tank. The discharge valve from the pump to the reactor is tested separately and closed during the system flow test so that reactor operation remains undisturbed.

Testing of the initiation sensors which are located outside the drywell is accomplished by valving out each sensor and applying a test pressure source. This verifies the operability of the sensor as well as the calibration range. The logic is tested by automatic pulse testing. The Automatic Pulse Test (APT), the sixth test, discussed in RPS Testability 7.2.1.1.4.8 is also applicable here for RCIC. The instrument channel trip may be tested by manually introducing a signal of sufficient magnitude to trip the instrument channel trip device in the logic cabinets in the control

room. The change of state of the trip device may be observed by annunciation and by visual inspection of the trip device output indicator.

7.4.1.1.4 Environmental Considerations

The only RCIC control components located inside the drywell that must remain functional in the environment resulting from a loss-of-coolant accident are the control mechanisms for the inboard isolation valve and the steam line warmup line isolation valve. The environmental capabilities of these valves are shown in Table 3.11-5. The equipment located outside the drywell which are required for a design basis event will operate in their worst-case environments shown in the Section 3.11 tables. All safety-related RCIC instrumentation is seismically qualified to remain functional following a Safe Shutdown Earthquake (SSE).

7.4.1.1.5 Operational Considerations

7.4.1.1.5.1 General Information

Normal core cooling is required in the event the reactor becomes isolated during normal operation from the main condenser by a closure of the main steam line isolation valves. Steam is vented through in the pressure relief/safety valves to the suppression pool. The RCIC system maintains reactor water level by providing the makeup water. Initiation and control are automatic.

7.4.1.1.5.2 Reactor Operator Information

The following items are located in the main control room for operator information:

Analog Indication

(1) RCIC Turbine Inlet Pressure

(2) RCIC Turbine Outlet Pressure

(3) RCIC Pump Suction Pressure

(4) RCIC Pump Discharge Pressure

(5) RCIC Pump Discharge Flow

(6) RCIC Turbine Speed

Indicating Lamps

(1) Position of all motor-operated valves.

(2) Position of all solenoid-operated valves.

(3) Turbine trip solenoid energized or deenergized.

(4) All sealed-in circuits.

(5) Pump status.

Annunciators

Annunciators are provided as shown in drawing E02-1RI99 and the RCIC system P&ID per Drawing M05-1079.

7.4.1.1.5.3 Setpoints

For setpoints see the Operational Requirements Manual (ORM).

7.4.1.2 Standby Liquid Control System (SLCS) – Instrumentation and Controls

7.4.1.2.1 System Identification

7.4.1.2.1.1 Function

The instrumentation and controls for the standby liquid control system are designed to initiate and continue injection of a liquid neutron absorber into the reactor when manually called upon to do so. This equipment also provides the necessary controls to maintain this liquid chemical solution well above saturation temperature in readiness for injection.

7.4.1.2.1.2 Classification

The standby liquid control system is a backup method for manually shutting down the reactor to cold subcritical conditions by independent means other than the normal method by the control rod system. Thus, the system is considered a "Safe shutdown System." The standby liquid control process equipment, instrumentation, and controls essential for injection of the neutron absorber solution into the reactor are designed to withstand Seismic Category I earthquake loads. Non-direct process equipment, instrumentation, and controls of the system are not required to meet Seismic Category I requirements, however, the local and main control room mounted equipment is located in seismically qualified panels.

7.4.1.2.2 Power Sources

The power supply to one explosive-operated injection valve, storage tank outlet valve, and injection pump and control circuit is powered from Division 1, 480 Vac and 120 Vac. The supply to the other explosive-operated injection valve, storage tank outlet valve, and injection pump and control circuit is powered from Division 2, 480 Vac and 120 Vac. The power supply to the tank heaters and heater controls is provided from two separate reliable AC sources. The power supply to the main control room benchboard indicator lights and the level and pressure sensors is powered from an emergency instrument bus.

7.4.1.2.3 Equipment Design

7.4.1.2.3.1 General

The SLCS is a special "plant capability" event system. No single active component failure of any plant system or component would necessitate the need for the operational function of the SLCS. It is included for a number of special consideration events:

(1) Plant Capability to Shutdown the Reactor Without Control Rods From Normal Operation (Refer to Appendix A of Chapter 15).

(2) Plant Capability to Shutdown the Reactor without Control Rods From a Transient Incident (Refer to Appendix A of Chapter 15 and Section 15.8).

Although this system has been designed to a high degree of reliability with many safety system features, it is not required to meet the safety design basis requirements of the safety systems.

7.4.1.2.3.2 Initiating Circuits

The standby liquid control is initiated in the main control room by turning a keylocking switch for system A and a separate keylocking switch for system B to the RUN position. The switch slip contacts remain in the activated position, but the mechanism spring returns to the center NORMAL position from which the key is removable.

7.4.1.2.3.3 Logic and Sequencing

When one division of standby liquid control system is initiated, one explosive valve fires and the tank discharge valve starts to open immediately. The pump that has been selected for injection will not start until its associated tank discharge valve is nearly open. In order to provide maximum MOV availability when the SLC system is in normal standby readiness, the overloads for the storage tank outlet valves are bypassed with a test switch in its NORMAL position. When the TEST position is selected, the overload bypass is removed thus allowing motor protection during routine non-accident operation of the valves.

7.4.1.2.3.4 Bypasses and Interlocks

Pumps are interlocked so that either the storage tank discharge valve or the test tank discharge valve must be open for the pump to run. When the standby liquid control system is initiated to inject the neutron absorber into the reactor, the Reactor Water Cleanup System suction valve is automatically closed, per SLC subsystem initiation, to accomplish that isolation.

7.4.1.2.3.5 Redundancy and Diversity

The SLCS is functionally redundant to the control rod drive system in achieving and maintaining the reactor subcritical. Therefore, the SLCS as a system by itself is not required to be redundant, although the active components and control channels are redundant for serviceability.

Diversity of initiating signals is a requirement only for RPS, ECCS, and Containment Isolation Systems. Therefore, diversity of initiating circuits is not employed for the SLCS design. The SLCS provides, however, a diverse means for reactivity control.

The method of identifying redundant power cables, signal cables and cable trays, and the method of identifying non-safety related cables as associated circuits are discussed in Subsection 8.3.1.3.

7.4.1.2.3.6 Actuated Devices

When the standby liquid control system is initiated to inject a liquid neutron absorber into the reactor, the following devices are actuated:

(1) One of the two explosive valves is fired;

(2) One of the two storage tank discharge valves is opened;

(3) One of the two injection pumps is started, and

(4) The pump output pressure and storage tank level sensing equipment indicates that the standby liquid control system is pumping liquid into the reactor.

7.4.1.2.3.7 Separation

The SLCS is separated both physically and electrically from the control rod drive system. The SLC system electrical control channels are separated in accordance with the requirements of Regulatory Guide 1.75.

7.4.1.2.3.8 Testability

The instrumentation and control system of the standby liquid control system can be tested as described in Subsection 7.4.2.2.2.1.3.

7.4.1.2.4 Environmental Considerations

The environmental considerations for the instrument and control portions of the standby liquid control system are the same as for the active mechanical components of the system. This is discussed in Section 3.11. The instrument and control portions of the Standby Liquid Control System are seismically qualified not to fail during and to remain functional following a Safe Shutdown Earthquake (SSE). Refer to Section 3.10 for seismic qualification aspects.

7.4.1.2.5 Operational Considerations

7.4.1.2.5.1 General Information

The control scheme for the standby liquid control system can be found in drawing E02-1SC99. The standby liquid control system is manually initiated in the main control room by inserting keys in the “A” and the “B” keylocking switches and turning them to the pump run position. It will take approximately 50 minutes with both pumps running to complete the injection and for the storage tank level sensors to indicate that the storage tank is depleted. When the injection is completed, the system may be manually turned off by turning the keylocking switch counterclockwise to the “STOP” position. The slip contacts will remain in their deactivate positions but the switch mechanism will spring-return to the center “NORMAL” position for key removal.

7.4.1.2.5.2 Reactor Operator Information

The following items are located in the main control room for operator information:

Analog Indication

(1) Storage tank level

(2) System pressures

(3) Explosive valves continuity

Status Lights

(1) Pump or storage tank outlet valve overload, trip or power loss

(2) Explosive loss of continuity or power loss

(3) Position of injection line manual service valve in the SLC sparger line

(4) Position of storage tank outlet valve

(5) Position of test tank discharge manual service valve

(6) SLCS manually out of service

(7) Pump auto trip

Annunciators and Status Lights

The standby liquid control system main control room annunciators indicate:

(1) Manual or automatic out of service condition of SLC system “A” and/or “B” due to:

a. Operation of manual out-of-service switch.

b. The loss of continuity of any explosive valve primers.

c. Storage tank outlet valve in test status.

d. Overload trip or power loss in pump or storage tank outlet valve controls.

(2) Standby liquid storage tank high or low temperature.

(3) Standby liquid tank high or low level.

(4) Standby liquid pump “A” or “B” auto trip.

The following items are located locally at the equipment for operator utilization:

Analog Indication

(1) Storage tank level

(2) System pressures

(3) Storage tank temperature

Indicating Lamps

(1) Pump status

(2) Storage tank operating heater status

(3) Storage tank mixing heater status

7.4.1.2.5.3 Set Points

The standby liquid control system is a manually initiated system with no automatic setpoints.

7.4.1.3 Reactor Shutdown Cooling Mode (RHR) Instrumentation and Controls

7.4.1.3.1 System Identification

7.4.1.3.1.1 Function

The shutdown cooling mode of the RHR System used during a normal shutdown and cooldown is a safe shutdown function.

The initial phase of a normal nuclear system cooldown is accomplished by routing steam from the reactor vessel to the main condenser which serves as the heat sink.

Reactor shutdown cooling mode consists of a set of pumps, valves, heat exchangers, and instrumentation designed to provide decay heat removal capability for the core. The mode specifically accomplishes the following:

(1) The reactor shutdown cooling mode is capable of providing cooling for the reactor during shutdown operation after the vessel pressure is reduced to approximately 96.5 psig.

(2) The mode is capable of cooling the reactor water to a temperature at which reactor refueling and servicing can be accomplished.

(3) The mode is capable of diverting part of the shutdown flow to a nozzle in the reactor vessel head to condense the steam generated from the hot walls of the vessel while it is being flooded.

The mode can accomplish its design objectives by a preferred means of directly extracting reactor vessel water from the vessel via the loop and routing it to a heat exchanger and back to the vessel, or by an alternate means by indirectly extracting the water via relief valve discharge lines to the suppression pool and routing suppression pool water to the heat exchanger and back to the vessel.

7.4.1.3.1.2 Classification

Electrical components for the Reactor Shutdown cooling mode of the Residual Heat Removal System are classified as Safety Class 3 and Seismic Category I. Portions of the RHR shutdown cooling system which are used in other modes that are safety related are classified as Safety Class 1 or 2.

7.4.1.3.2 Power Sources

This system utilizes normal plant power sources. These include 4160 vac, 480 vac, 120 vac instrument busses. and dc sources. If, for any reason, the normal plant sources become unavailable, the system is designed to utilize the emergency busses and sources since the RHR has safety modes of operation (e.g., LPCI) associated with this equipment.

7.4.1.3.3 Equipment Design

7.4.1.3.3.1 General

The reactor water is cooled by taking suction from one of the recirculation loops; the water is pumped through the system heat exchanger and back to the reactor vessel via the feedwater lines. Part of the flow can be diverted to a nozzle in the vessel head to provide for head cooling. The function of head cooling is to condense steam generated from the hot walls of the vessel while it is being flooded, thereby keeping system pressure down. During the initial phase of cooling the reactor, only a portion of the RHR system heat exchanger capacity is required. This allows the remaining portion of the RHR system with its heat exchanger, associated pumps, and valving to be available for the LPCI mode. The LPCI mode portion of the system is shifted to the shutdown mode after the reactor is depressurized so the proper cooling rate may be achieved with the lower reactor water inlet temperature. See Drawing M05-1075 for RHR System P&ID.

7.4.1.3.3.2 Initiating Circuits

The reactor shutdown cooling system is initiated by manual operator actions. There is no requirement for automatic control.

7.4.1.3.3.3 Logic and Sequencing

The following is a typical sequence of operations illustrating the use of the RHR shutdown cooling mode:

(1) Initially steam is condensed in the main condenser. This heat sink allows the reactor to be brought from operating pressures (1000 psig) and temperature (540°F) to the RHR shutdown cooling mode permissive setpoint (~96.5 psig and 335°F).

(2) RHR shutdown cooling operates to bring the reactor to 125° F within 20 hours after all rods have been inserted. Early in the shutdown, part of the RHR flow may be diverted to condense steam in the reactor head area (head spray) to allow the vessel to be flooded.

During the RHR shutdown cooling operation, a reactor low low water level signal will cause vessel isolation.

7.4.1.3.3.4 Bypasses and Interlocks

To prevent opening the reactor shutdown cooling valves except under proper conditions, the interlocks are provided as shown in Table 7.4-2.

The RHR A heat exchanger may be used for spent fuel pool cooling as described in Subsection 7.6.1.9.

The two RHR pumps used for shutdown cooling are interlocked to trip if the reactor shutdown cooling valves and suction valves from the suppression pool are not properly positioned.

7.4.1.3.3.5 Redundancy and Diversity

The reactor shutdown cooling system contains two loops. Either loop is sufficient to satisfy the cooling requirements for shutdown cooling. A diverse method of shutdown cooling is provided by the alternate shutdown cooling mode, which is actually an extension of the LPCI mode. To establish the alternate mode, the normal shutdown cooling loop is bypassed by manually switching to take suction water from the suppression pool and manually opening the ADS valves to allow reactor water to flow back to the suppression pool. The ADS valves may be actuated by either Division 1 or Division 2 power thus providing redundancy in the event of a divisional power failure.

Refer to Chapter 15 and Appendix 15A of Chapter 15 for a system level examination of the above operation.

Although there is no instrumentation diversity requirement for the reactor shutdown cooling system, the design basis objective is achieved by providing two shutdown cooling paths.

7.4.1.3.3.6 Actuated Devices

All power operated valves in the shutdown cooling system are equipped with remote manual switches in the main control room. Further discussion can be found in Section 7.3.1.1 relative to the general operation of the RHR system including its other modes of operation.

7.4.1.3.3.7 Separation

Since various modes of operation of the RHR system perform safety-related functions (LPCI and containment cooling), any of the system's equipment performing safety-related functions satisfy the appropriate safety separation criteria (refer to Section 7.3.1.1).

7.4.1.3.3.8 Testability

The reactor shutdown cooling pumps (RHR) may be tested to full capacity during normal plant operation. All valves except those isolated by reactor pressure interlock in the system may be tested during normal plant operation from the remote manual switches in the main control room. The logic is tested by automatic pulse testing. The Automatic Pulse Test (APT), the sixth test, discussed in RPS Testability 7.2.1.1.4.8 is also applicable here for the Reactor Shutdown Cooling mode function of RHR.

7.4.1.3.4 Environmental Considerations

The only reactor shutdown cooling control component located inside the drywell that must remain functional in the environment is the control mechanism for the inboard isolation shutdown cooling suction valve. The environmental capabilities of this valve are discussed in Subsection 7.3.1.1.2. The control and instrumentation equipment located outside the drywell is selected in consideration of the normal and accident environments in which it must operate.

RHR equipment is seismically qualified and environmentally classified as discussed in Sections 3.2, 3.10 and 3.11.

7.4.1.3.5 Operational Considerations

7.4.1.3.5.1 General Information

All controls for reactor shutdown cooling are located in the main control room. Reactor operator information is provided as described in the RHR discussion of the LPCI mode in Subsection 7.3.1.1.1.6.11.

7.4.1.3.5.2 Reactor Operator Information

Refer to Section 7.3.1.1 for reactor operator information associated with RHR in general.

7.4.1.3.5.3 Set Points

There are no safety-related set points involved in the operation of the shutdown cooling mode of RHR except that reactor pressure and water level set points must be satisfied before the operator can begin this mode.

7.4.1.4 Remote Shutdown System

7.4.1.4.1 Plant Special Capabilities Identification

7.4.1.4.1.1 General

The remote shutdown system provides a means to carry out the reactor shutdown functions from outside and independent of the main control room and bring the reactor to cold conditions in a safe and orderly fashion fo any abnormal occurrence that results in the evacuation of the MCR, including a 10CFR50 Appendix R remote shutdown in the event of a fire.

The control panel contains Division I controls and indications for equipment used as the primary means to cool the reactor to the cold condition from outside the main control room. A back up means of accomplishing the cool down assuming a failure of the primary means for other than Appendix R fires is provided by Division II controls and indications on the panel and equipment operation from Division II motor control centers.

The main control room and the remote shutdown panel and the Division II motor control centers are each served by separate HVAC systems located in different areas of the plant. It is therefore considered improbable that the event which caused evacuation of the main control room would also render the remote shutdown or Division II MCC's inaccessible.

7.4.1.4.1.2 Postulated Conditions Assumed to Exist as the Main Control Room Becomes Inaccessible

The following is a list of conditions which were assumed to exist at the time that the main control room becomes inaccessible and form the basis of the remote shutdown system design. These conditions are the conditions under which the safe shutdown has to be achieved and maintained.

(1) The plant is operating initially at or below design power.

(2) The plant is not experiencing any accident situation. No design basis accident (including a LOCA) is assumed, so that complete control of engineered

safeguard feature (ESF) systems from outside the main control room is not required. For Division II remote shutdown instrumentation/equipment used in case of failure of Division I power to the remote shutdown panel, no fire damage is assumed to any system or component required for reactor shutdown.

(3) All personnel have evacuated the main control room and the main control room continues to be inaccessible for the duration of the cool down.

(4) The initial event that causes the main control room to become inaccessible is assumed to be such that the reactor operator can manually scram the reactor before leaving the main control room. If this is not possible, opening the output breakers of the RPS logic from outside the main control room will be used as a backup means to achieve initial reactor reactivity shutdown.

(5) Under normal conditions, the main turbine pressure regulators will be controlling reactor pressure via the bypass valves. However, in the interest of demonstrating that remote shutdown system can accommodate even loss of the turbine controls, it is assumed that the turbine generator control panel function is also lost. Therefore, main steam line isolation is initiated prior to control room evacuation and reactor pressure is relieved through the relief valves to the suppression pool.

(6) The reactor feedwater system isolation is also initiated prior to control room evacuation. Reactor vessel water inventory is maintained by the RCIC system.

(7) AC/DC power services are expected to be supplied from at least one plant power system for each essential system or equipment item in the remote shutdown system. Even though the loss of off-site AC power is considered unlikely, the remote shutdown system is powered from Class 1 power buses which are automatically backed-up by the plant diesel generators. Manual control of the diesel generators is available outside the main control room.

The above initial conditions and associated assumptions are very severe and conservatively bound any similar postulated situation. For an additional list of assumptions refer to Appendix F, Section 1.4.

7.4.1.4.2 Remote Shutdown Capability Description

The overall features and capabilities of the remote shutdown system to cool the reactor to cold shutdown are as follows:

(1) The capability provides remote control for reactor systems needed to carry out the shutdown function from outside the main control room and bring the reactor to cold condition in a safe and orderly fashion.

(2) It provides a variation to the normal system used in the main control room permitting the shutdown of the reactor when the normal heat sinks (turbine and condenser) are assumed to be unavailable.

(3) Automatic activation of relief valves and the Reactor Core Isolation Cooling (RCIC) system will bring the reactor to a hot shutdown condition after scram and

isolation are achieved. During this phase of shutdown, the suppression pool will be cooled by operating the Residual Heat Removal (RHR) system in the suppression pool cooling mode. Reactor pressure will be controlled and core decay and sensible heat rejected to the suppression pool by relieving steam pressure through the relief valves. Reactor water inventory will be maintained by the RCIC system.

(4) Manual operation of the certain safety relief valves will cool the reactor and reduce pressure at a controlled rate until reactor pressure becomes so low that the RCIC turbine will discontinue operation. This condition will be reached at 50 to 100 psig reactor pressure.

(5) The RHR system will then be operated in the shutdown cooling mode using the RHR system heat exchanger in the reactor water circuit to bring the reactor to the cold low pressure condition.

(6) Essential equipment cubicles cooling systems will maintain the environmental conditions for equipment operated from the remote shutdown panel within their design basis.

(7) Redundant safety grade means of carrying out the reactor shutdown from outside the control room are provided by Division I controls and indications on the remote shutdown panel and by Division II controls and indications on the remote shutdown panel and operation of Division II equipment from local motor control centers.

(8) Operating any single transfer switch will not result in the transfer of controls for more than one system for most NSSS (see Section 7.4.1.4.4.3).

7.4.1.4.3 Remote Shutdown Capability Procedure

The following is a general description of the procedure which will be followed in using the remote shutdown procedure:

(1) If evacuation becomes necessary, the operator will manually scram the reactor by placing the Mode switch in “SHUTDOWN” at the Principal Plant Console prior to leaving the main control room.

(2) The remainder of the procedure assumes that the automatic pressure regulator is not available, the main steam line isolation valves are closed, and the Feedwater Injection is terminated.

(3) Opening the output breakers on feeders from the NSPS buses and the auxiliary 120 Vac bus to the Reactor Protection System trip logic channels will be used as a backup means of scramming the reactor and closing the containment and reactor vessel isolation valves. The controls for this function are located on the Reactor Protection System power distribution panel.

(4) When conditions of the evacuation warrant, the breaker for the scram solenoids will be opened and left open while the control room is unattended to assure the reactor scram and to prevent unplanned and spurious rod withdrawal.

(5) Operate transfer switches to transfer control to the remote shutdown panel. The operation or the transfer switches is such that the operator can either transfer all control to the Remote Shutdown Panel by operating all switches or transfer only the system (RCIC or RHR Shutdown Cooling) to be operated by operating the associated transfer switch. Operation of any single transfer switch will not transfer controls or indication for more than one system for most NSSS (see Section 7.4.1.4.4.3).

(6) Relief valves may open automatically and cycle to control reactor pressure. Reactor level will drop at a rate dependent on prior power level and elapsed time from scram.

(7) The postulated situation and actions taken upon evacuation of the main control room are expected to result in Emergency Operating Procedure (EOP) entry conditions. The EOPs, when entered, are utilized concurrently with the remote shutdown procedure for controlling critical plant parameters.

(8) The operator establishes RPV water level control consistent with EOP guidance using RCIC as the preferred system. LPCI (Div 1 or Div 2) is available for RPV level control if needed.

(9) The operator establishes RPV pressure control consistent with EOP guidance utilizing RCIC, SRVs (Div 1 or 2), or a combination of both.

(10) Use the RHR system with pump and one heat exchanger, and associated water systems to cool the suppression pool.

(11) After RPV water level and pressure control has been established, a controlled plant cooldown to 96.5 psig is commenced. The reactor cooldown rate should not exceed 100°F per hour, as determined by observing reactor pressure.

(12) Place the RHR system in the shutdown cooling mode, and continue cooldown until the reactor is in the cold low-pressure condition.

(13) As a back up means of shutdown in the event that Division I control and indication is unavailable at the Remote Shutdown Panel, the operator can control reactor depressurization at the panel by operating the Division II SRV controls and monitoring Division II indications. The cooldown can be accomplished by local operation of Division II equipment at motor control centers.

7.4.1.4.4 Remote Shutdown Capability Controls and Instrumentation Equipment, Panels, and Displays

7.4.1.4.4.1 Main Control Room - Remote Shutdown Capability Interconnection Design Considerations

Some of the systems used in the normal reactor shutdown operation are also utilized in the remote shutdown capability to shutdown the reactor from outside the main control room. The remote shutdown capability for Division I with the exception identified in section 7.4.1.4.4.3 are designed to control the required shutdown systems from outside the main control room irrespective of shorts, opens, or grounds in the control circuit in the main control room that may

have resulted from the event causing an evacuation. For Division I with the exception identified in section 7.4.1.4.4.3, the functions needed for remote shutdown control are provided with manual transfer devices which override controls in the main control room and transfer the controls to the remote shutdown panel. All necessary power supplies are also transferred. For Division I with the exception identified in section 7.4.1.4.4.3, remote shutdown control is not possible without actuation of the transfer devices.

Operation of the transfer devices causes an alarm in the main control room. The remote shutdown panel is located in the Aux. Building. Access to this panel is administratively controlled. Most of the Division II control switches and indicating lights are located on various MCC cubicles and switchgear compartments. Actuation of these control switches will sound alarms in the control room. The automatic controls and permissives for this equipment are not bypassed by the control switches for remote shutdown for Division II.

7.4.1.4.4.2 Reactor Core Isolation Cooling (RCIC) System

The following RCIC System equipment/functions have transfer and control switches located on the remote shutdown panel:

DIVISION I

E51-F010 - RCIC Storage Tank Suction Valve
E51-F013 - RCIC Pump Discharge to Reactor Outboard Isolation Valve
E51-F019 - RCIC Pump Minimum Flow Recirc to Suppression Pool
E51-F022 - RCIC Pump First Test Valve to Storage Tank
E51-C002F - Gland Seal Compressor
E51-F031 - RCIC Suppression Pool Suction Valve
E51-F045 - RCIC Turbine Steam Supply Shutoff Valve
E51-F046 - RCIC Pump Supply to Turbine Lube Oil Cooler
E51-F059 - RCIC Pump Second Test Valve to Storage Tank
E51-F064 - RHR and RCIC Steam Supply Outboard Isolation Valve
E51-F068 - RCIC Turbine Exhaust to Suppression Pool Stop Valve
E51-F077 - RCIC Exhaust Vacuum Breaker Outboard Isolation Valve
E51-C002E - RCIC Turbine Trip Throttle Valve

DIVISION II

E51-F063 - RHR and RCIC Steam Supply Inboard Isolation Valve
E51-F076 - RHR and RCIC Steam Supply Warm Up Isolation Valve
E51-F078 - RCIC Exhaust Vacuum Breaker Inboard Isolation Valve

See RCIC P & ID Drawing M05-1079

RCIC functional control is shown on drawing E02-1R199 which reflects the latest RCIC system design. (Q&R 421.14)

The following RCIC System instrumentation is provided on the remote shutdown panel:

(1) RCIC Flow Controller and indicator, transfer switch, DC-to-AC inverter and square root converter

(2) RCIC Turbine Speed Indicator

(3) Indicating lights are provided for:

a. Turbine tripped

b. Turbine Bearing oil low pressure

c. Turbine governor end bearing oil temperature high

d. Turbine coupling end bearing oil temperature high

(4) RCIC storage tank level indicator.

(5) Suppression pool level indicator (Div. I and II).

(6) Suppression pool temperature indicator (Div. I and II).

7.4.1.4.4.3 Residual Heat Removal (RHR) System

The following RHR System equipment/functions have transfer and control switches located at the remote shutdown panel:

DIVISION I

1E12-C002A - RHR Pump A
1E12-F003A - RHR A Heat Exchanger Outlet Valve
1E12-F004A - RHR A Suppression Pool Suction Valve
1E12-F006A - RHR A Shutdown Cooling Suction Valve
1E12-F008 - Shutdown Cooling Outboard Suction Isolation Valve
1E12-F014A - RHR A Heat Exchanger SSW Inlet Valve
1E12-F024A - RHR Pump A Test Line Return to Suppression Pool
1E12-F027A - RHR to Containment Outboard Isolation Valve
1E12-F028A - RHR A to Containment Spray Shutoff Valve
1E12-F037A - RHR A to Containment Pool Cooling Shutoff Valve
1E12-F042A - RHR Pump A LPCI Injection Valve
1E12-F047A - RHR A Heat Exchanger Inlet Valve
1E12-F048A - RHR A Heat Exchanger Bypass Valve
1E12-F053A - RHR Shutdown Cooling Return Valve
1E12-F064A - RHR Pump A Minimum Flow Recirc Valve
1E12-F068A - RHR A Heat Exchanger SSW Outlet Valve

DIVISION II

1E12-F006B - RHR B Shutdown Cooling Suction Valve
1E12-F009 - Shutdown Cooling Inboard Suction Isolation Valve

The following RHR system equipment/functions have control switches located at various MCCs or switchgears:

DIVISION I

1E12-F023 - RPV Spray Isolation Valve

DIVISION II

1E12-F014B - RHR B Heat Exchanger SSW Inlet Valve
1E12-F068B - RHR B Heat Exchanger SSW Outlet Valve
1E12-F004B - RHR Pump B Suppression Pool Suction Valve
1E12-F003B - RHR B Heat Exchanger Shell Side Outlet Valve
1E12-F064B - RHR Pump B Minimum Flow Recirc Valve
1E12-F048B - RHR B Heat Exchanger Bypass Valve
1E12-F047B - RHR B Heat Exchanger Inlet Valve
1E12-C002B - RHR Pump B
1E12-F024B - RHR Pump B Test Line Return to Suppression Pool Valve
1E12-F042B - RHR Pump B LPCI Injection Valve
1E12-F053B - RHR Shutdown Cooling Return Valve

The following RHR instrumentation is located on the remote shutdown panel:

(1) RHR Flow indicator (Division I)

The Division II RHR pump flow is derived from pump differential pressure by locally obtaining suction and discharge pressure from instrumentation located on panel 1H22-P021.

7.4.1.4.4.4 Nuclear Boiler System

The following functions have transfer and control switches located at the remote shutdown panel:

Division I and Division II controls for two non-ADS and one ADS air operated relief valves are provided on different sections of the panel to provide the capability to manually depressurize the reactor from either division. (The valves are 125 Vdc solenoid pilot operated.)

The following Nuclear Boiler instrumentation is provided on the remote shutdown panel:

(1) Reactor water level indicators (Div. I and II)

(2) Reactor pressure indicators (Div. I and II)

7.4.1.4.4.5 Shutdown Service Water System

The following Shutdown Service Water System (SSWS) equipment/functions have transfer and control switches located at the remote shutdown panel for proper operation of the remote shutdown system:

One control switch is provided for each of the following:

DIVISION I

SX01PA - SSW Pump 1A
SX014A - Plant Service Water to SSW System Interconnection Valve
SX063A - Diesel Generator 1A Heat Exchanger Outlet Valve

One control (selector) switch is provided which is common to the following:

DIVISION I

SX003A - SSWS Strainer 1A Inlet Valve
SX004A - SSWS Strainer 1A Outlet Valve
SX008A - SSWS Strainer 1A Bypass Valve

Controls for the strainer motor are available on a motor control center remote from the main control room.

One control switch is provided which is common to all of the following. This switch allows closing of all valves listed.

DIVISION I

SX011A - SSWS Division 1 Crosstie Isolation Valve
SX082A - RHR Heat Exchanger 1A Demineralized Water Inlet Valve
SX012A - Fuel Pool Heat Exchanger 1A SSW Inlet Valve
SX062A - Fuel Pool Heat Exchanger 1A SSW Outlet Valve
SX016A - SSW to Fuel Pool Make-Up Inlet Valve
SX073A - SGTS Train A Charcoal Bed Deluge Valve
SX076A - Control Room HVAC Recirc Unit A Deluge Valve
SX107A - Control Room HVAC M/U Unit A Deluge Valve

The following shutdown service water system equipment/functions have control switches located at local MCC/switchgear (no transfer switches are provided):

DIVISION II

SX01PB - SSWS Pump 1B
SX014B - Plant Service Water to SSW System Interconnection Valve

The following SSWS instrumentation is provided at the remote shutdown panel:

(1) SSWS Strainer A discharge pressure indicator.

(2) Alarm (indicating light) for SSWS Strainer A high differential pressure.

7.4.1.4.4.6 Essential Equipment Cubicle HVAC Systems

The following essential equipment cubicle HVAC systems have transfer switches located on the remote shutdown panel. Controls are provided by local instrumentation remote from the main control room.

DIVISION I

VH01CA- SSW Pump 1A Room Supply Fan
VY02C - RHR Pump 1A Room Supply Fan
VY03C - RHR Heat Exchanger 1A Room Supply Fan
VY04C - RCIC Pump Room Supply Fan
VD01CA- Diesel Generator 1A Room Vent Fan

VD02CA- Diesel Generator 1A Fuel Oil Storage/Day Tank Room Exhaust Fan
VX03CA- Division 1 Switchgear Room Exhaust Fan
VX05CA- Division 1 Battery Room Exhaust Fan
VX12CA- Switchgear Heat Removal Return Fan A

The following essential equipment cubicle HVAC system has control switches provided at local MCC (no transfer switches are provided):

DIVISION II

VH01CB - SSW pump room B supply fan

Status (indicating) lights are provided on the remote shutdown panel for each of the fans listed.

7.4.1.4.4.7 Miscellaneous Instrumentation

The following miscellaneous instrumentation is provided on the remote shutdown panel:

(1) Drywell temperature indications (two)

(2) Suppression pool temperature indicators (Three each in Division I and Division II associated with the three safety relief valves controlled from each division.)

(3) Indicating lights for:

a. Diesel Generator Status

b. Diesel Fuel Oil Transfer Pump Status

7.4.1.4.4.8 Miscellaneous Controls

The following miscellaneous equipment/function has a transfer and control switch at the remote shutdown panel for proper operation of the remote shutdown system:

DIVISION I

480V Unit Substation 1A and A1 breaker

A transfer switch is provided to isolate the following equipment/functions from the main control room (no control switches are located at the remote shutdown panel):

DIVISION I

Diesel generator output breaker control power.
Diesel generator fuel oil transfer pump.

7.4.1.4.4.9 Reactor Water Cleanup System

The Reactor Water Cleanup pump suction outboard isolation valve 1G33-F004 control is provided by transfer and control switches located on MCC 1A3.

7.4.1.4.4.10 Instrument Air System

The Compressed Gas Header Outboard Isolation Valve 1IA012A control is provided by transfer and control switches located on Auxiliary Building MCC 1A3.

7.4.1.4.4.11 Main Steam Line System

The Main Steam Line Drain Outboard Isolation Valve 1B21-F019 control is provided by transfer and control switches located on MCC 1A3.

7.4.1.4.4.12 Feedwater System

The Feedwater Shutoff valves 1B21-F065A and 1B21-F065B control is provided by transfer and control switches located on Auxilary Building MCC 1A2.

7.4.2 Analysis

7.4.2.1 Reactor Core Isolation Cooling (RCIC System - Instrumentation and Control

7.4.2.1.1 General Functional Requirements Conformance

For the events specified in Subsection 7.4.1.1.1.1, the RCIC system has a makeup capacity sufficient to prevent the reactor vessel water level from decreasing to the level where the core is uncovered.

To provide a high degree of assurance that the RCIC system shall operate when necessary and in time to provide adequate inventory makeup, the power supply for the system is taken from energy sources of high reliability and which are immediately available. Evaluation of instrumentation reliability for the RCIC system shows that no failure of a single initiating sensor either prevents or falsely starts the system.

A design flow functional test of the RCIC system can be performed during plant operation by taking suction from the demineralized water in the RCIC storage tank and discharging through the full flow test return line back to the RCIC storage tank. During the test, the discharge valve to the reactor vessel remains closed so that reactor operation is not disturbed. Control system design provides automatic return from the test mode to the operating mode if system initiation is required during testing except for the conditions described in 7.4.1.1.3.1.

Chapter 15 and Appendix 15A of Chapter 15 examine the system level aspects of this system in plant operation and consider its function under various plant transient events.

7.4.2.1.2 Specific Regulatory Requirements Conformance

7.4.2.1.2.1 NRC Regulatory Guides Conformance

7.4.2.1.2.1.1 RG 1.6 - Independence Between Redundant Standby Power Sources and Between Their Distribution Systems

Since it is not necessary for RCIC alone to meet the single-failure criterion, redundant power sources are not required.

7.4.2.1.2.1.2 RG 1.11 - Instrument Lines Penetrating Primary Reactor Containment

All RCIC instrument lines penetrating or connected to containment meet the requirements of regulatory position C.1 of RG 1.11, with the exceptions stated in Section 1.8.

7.4.2.1.2.1.3 RG 1.22 - Periodic Testing of Protection System Actuation Functions

RCIC is fully testable from initiating sensors to actuated devices during full power operation, except for the discharge valve to head spray nozzle.

7.4.2.1.2.1.4 RG 1.29 - Seismic Design Classification

The safety related portion of RCIC instrumentation and control is classified as Seismic Category I and is qualified to remain functional following an SSE.

7.4.2.1.2.1.5 RG 1.30 - Quality Assurance Requirements for the Installation, Inspection and Testing of Instrumentation and Electric Equipment

Conformance to RG 1.30 is discussed in Subsection 7.1.2.6.7.

7.4.2.1.2.1.6 RG 1.32 - Use of IEEE - 308

Conformance to RG 1.32 as discussed in Section 8.3 is applicable to RCIC safety related control instrumentation.

7.4.2.1.2.1.7 RG 1.47 - Bypassed and Inoperable Status Indication for Nuclear Power Plant Safety System

Regulatory Guide 1.47 Positions C.1, C.2, and C.3

Automatic indication is provided in the main control room to inform the operator that RCIC is inoperable. Annunciation is provided to indicate the system or part of the system is not operable. Bypasses of certain infrequently used pieces of equipment, such as manual locked open valves, are not automatically annunciated in the main control room; however, capability for manual activation of each system level bypass indicator is provided in the control room for those systems that have these infrequently used bypasses. An administratively controlled switch is used for this manual activation. Following are examples of automatic indication of inoperability.

(1) Circuit breaker opening or withdrawal is indicated in the main control room.

(2) All motor control center control circuits are individually monitored. If control voltage is lost as a result of tripping of a motor starter feeder breaker or removal of a fuse in the control circuit, indication is provided in the main control room.

(3) Instruments which form part of a one-out-of-two twice logic can be removed from service for calibration. Removal of the instrument from service will be annunciated in the control room as “RCIC Division 1(2) out of service.”

(4) The RCIC contains a control switch with “Lockout” or “Test Mode” with continuous main control room indication that “Lockout” or “Test Mode” has been selected.

Regulatory Guide 1.47 Position C.4

All the annunciators can be tested by depressing the annunciator test switches on the main control room benchboards.

Individual indicators will be arranged together on the control room panel to indicate what function of the system is out of service, bypassed, or otherwise inoperable. All bypass and inoperability indicators both at a system level and component level will be grouped only with items that will prevent a system from operating if needed. Indication of pressures, temperatures, and other system variables that are a result of system operation will not be included with the bypass and inoperability indicators.

These indication provisions serve to supplement administrative controls and aid the operator in assessing the availability of component and system level protective actions. This indication does not perform a safety function.

All non-1E circuits are electrically independent of the station safety systems. The annunciator initiation signals are provided with isolators and can in no way prevent protective actions.

Each indicator will be provided with dual lamps. Testing will be included on a periodic basis when equipment associated with the indication is tested.

7.4.2.1.2.1.8 RG 1.53 - Application of the Single-Failure Criterion to Nuclear Power Plant Protection Systems

RCIC meets the single-failure criterion on a network basis in conjunction with HPCS. It is not necessary for RCIC alone to meet the single-failure criterion in itself since its function is duplicated or backed up by other systems. Redundant sensors are discussed in Section 7.4.2.1.2.3.1.6.

7.4.2.1.2.1.9 RG 1.62 - Manual Initiation of Protective Actions

RCIC may be automatically as well as manually initiated inside the main control room as well as manually at the remote shutdown facility outside the main control room.

7.4.2.1.2.1.10 RG 1.63 - Electric Penetration Assemblies in Containment Structures for Water-Cooled Nuclear Power Plants

Conformance to RG 1.63 is discussed in Subsection 8.1.6.1.12.

7.4.2.1.2.1.11 RG 1.75

See Subsection 7.1.2.6.19 for discussion of the degree of conformance.

7.4.2.1.2.1.12 RG 1.89 - Qualification of Class 1E Equipment for Nuclear Power Plants

Conformance to RG 1.89 is discussed in Section: 3.11.

7.4.2.1.2.1.13 Regulatory Guide 1.97

See Subsection 7.1.2.6.23 for discussion of the degree of conformance.

7.4.2.1.2.1.14 Regulatory Guide 1.100

See Section 3.10 for discussion of the degree of conformance.

7.4.2.1.2.1.15 Regulatory Guide 1.105

See Subsection 7.1.2.6.25 for discussion of the degree of conformance.

7.4.2.1.2.1.16 Regulatory Guide 1.118

See Subsection 7.1.2.6.26 for discussion of the degree of conformance.

7.4.2.1.2.2 NRC Regulations Conformance - 10 CFR 50 Appendix A Requirements

7.4.2.1.2.2.1 General Design Criterion 13

The reactor vessel water level, RCIC pump discharge pressure, and RCIC flow rate are monitored and displayed in the main control room.

7.4.2.1.2.2.2 General Design Criterion 20

Level sensors constantly monitor the water level in the reactor vessel and the RCIC system is automatically initiated when the level drops below the pre-established set point.

7.4.2.1.2.2.3 General Design Criterion 21

RCIC is fully testable from sensor to actuated device during normal operation.

7.4.2.1.2.2.4 General Design Criterion 22

RCIC initiation signal is supplied by redundant, independent sensors in a one-out-of-two twice logic.

7.4.2.1.2.2.4.1 General Design Criterion 24

The RCIC system is designed to be completely independent of control systems such that no single control system failure can affect RCIC operation.

7.4.2.1.2.2.5 General Design Criterion 29

RCIC maintains reactor vessel water level by providing the makeup water in the event the reactor becomes isolated from the main condenser during normal operation.

7.4.2.1.2.2.6 General Design Criterion 34

Conformance to GDC 34 is discussed in Subsection 7.4.1.1.1.1.(3).

7.4.2.1.2.2.7 General Design Criterion 37

RCIC is not part of the ECCS.

7.4.2.1.2.3 Conformance to Industry Codes and Standards

7.4.2.1.2.3.1 IEEE 279

7.4.2.1.2.3.1.1 General Functional Requirement (IEEE 279, Paragraph 4.1)

RCIC is automatically initiated by reactor low water level measurements.

7.4.2.1.2.3.1.2 Single-Failure Criterion (IEEE 279, Paragraph 4.2)

The RCIC system is not required to meet the single-failure criterion. The RCIC initiation sensors wiring and logic cabinet do, however, meet the single-failure criterion. Physical separation of instrument sensing lines is provided so that no single instrument rack destruction or single instrument sensing line (pipe) failure can prevent RCIC initiation. Wiring separation between divisions also provides tolerance to single wireway destruction (including shorts, opens, and grounds) in the accident detection portion of the control logic . The single-failure criterion is not applied to the logic cabinet or to other equipment required to function for RCIC operation.

RCIC and HPCS mitigate only the water level effects of a rod drop accident by providing makeup water required as a consequence of this event. Chapter 15 analysis of the rod drop accident, however, takes no credit for either of these systems in mitigating the consequences of the event. (Q&R 421.4)

7.4.2.1.2.3.1.3 Quality of Components and Modules (IEEE 279, Paragraph 4.3)

The components of the RCIC instrumentation and control are of the same high quality as the ECCS systems. The safety-related portion of RCIC control and instrumentation components and modules is seismically qualified to remain functional following a Safe Shutdown Earthquake (SSE).

7.4.2.1.2.3.1.4 Equipment Qualification (IEEE 279) Paragraph 4.4)

No components of the RCIC control system are required to operate in the drywell environment except the RCIC steamline isolation valve.

All other equipment for RCIC initiation is located outside the drywell and is capable for accurate operation in ambient temperature conditions that result from abnormal conditions. Panels and equipment cabinets are located in the main control room and/or auxiliary room environment so environmental testing of components mounted in these enclosures is not warranted.

The components in the RCIC control system have demonstrated their reliable operability in previous applications in nuclear power plant protection systems or in extensive industrial use.

7.4.2.1.2.3.1.5 Channel Integrity (IEEE 279, Paragraph 4.5)

The RCIC system instrument initiation channels satisfy the channel integrity objective.

7.4.2.1.2.3.1.6 Channel Independence (IEEE 279, Paragraph 4.6)

Channel independence for initiation sensors is provided by electrical and mechanical separation. The A sensors for reactor vessel level, for instance, are located on one local

instrument panel identified as Division 1 equipment and the B sensors are located on a second instrument panel widely separated from the first and identified as Division 2 equipment. The Division 1 sensors have a common pair of process taps which are widely separated from the corresponding taps for the Division 2 sensors.

Disabling one or both sensors in one location does not disable the control for RCIC initiation.

7.4.2.1.2.3.1.7 Control and Protection Interaction (IEEE 279, Paragraph 4.7)

The RCIC system has no interaction with plant control systems. Annunciator circuits use sensors and logic circuits which cannot impair the operability of the RCIC system control because of electrical isolation.

7.4.2.1.2.3.1.8 Derivation of System Inputs (IEEE 279, Paragraph 4.8)

The RCIC system uses a direct measure of the need for coolant inventory makeup, e.g., reactor vessel low water level.

7.4.2.1.2.3.1.9 Capability for Sensor Checks (IEEE 279, Paragraph 4.9)

All sensors are installed with calibration taps and instrument valves to permit testing during normal plant operation or during shutdown.

7.4.2.1.2.3.1.10 Capability for Test and Calibration (IEEE 279, Paragraph 4.10)

The RCIC control system can be completely tested during normal plant operation to verify that each element of the system, whether active or passive, is capable of performing its intended function.

As part of this test the turbine and RCIC pump are started in the test mode with the pump discharging into the RCIC storage tank. In this test mode all major components, except the isolation valves are tested. Valve operability tests completes the major system component testing.

7.4.2.1.2.3.1.11 Channel Bypass or Removal From Operation (IEEE 279, Paragraph 4.11)

Calibration of a sensor which introduces a single instrument channel trip will not cause a protective function without the coincident trip of a second channel. There are no instrument channel bypasses. Removal of a sensor from operation during calibration does not prevent the redundant instrument channel from functioning.

7.4.2.1.2.3.1.12 Operating Bypasses (IEEE 279, Paragraph 4.12)

There is no violation of the operating bypass section of IEEE 279, since RCIC and HPCS cannot be simultaneously disabled.

7.4.2.1.2.3.1.13 Indication of Bypasses (IEEE 279, Paragraph 4.13)

Automatic indication of bypasses is provided by individual annunciators to indicate what function of the system is out of service, bypassed or otherwise inoperative. In addition, each of the indicated bypasses also activates a "SYSTEM-INOPERATIVE" or a "SYSTEM-OUT-OF-

SERVICE" annunciator. Manual "SYSTEM INOPERATIVE" or "SYSTEM-OUT-OF-SERVICE" switches are provided for operator use for items that are only under administrative control.

7.4.2.1.2.3.1.14 Access to Means for Bypassing (IEEE 279, Paragraph 4.14)

Access to means o[bypassing is located in the main control room and therefore under the administrative control of the operators.

7.4.2.1.2.3.1.15 Multiple Set Points (IEEE 279, Paragraph 4.15)

This is not applicable.

7.4.2.1.2.3.1.16 Completion of Protective Action Once it is Initiated (IEEE 279, Paragraph 4.16)

The final control elements for the RCIC system are essentially bistable, i.e., motor-operated valves stay open or closed once they have reached their desired position, even though their starter may drop out. In the case of the gland seal air compressor, the auto initiation signal is electrically sealed-in.

Thus, once protective action is initiated (i.e., flow established), it must go to completion until terminated by deliberate operator action or automatically stopped on high vessel water level or system malfunction trip signals.

7.4.2.1.2.3.1.17 Manual Actuation (IEEE 279, Paragraph 4.17)

Each piece of RCIC actuation equipment required to operate (pumps and valves) is capable of manual initiation from the main control room.

Failure of logic circuitry to initiate the RCIC system will not affect the manual control of equipment. However, failures of active components or control circuits which produce a turbine trio may disable the manual actuation of the RCIC system. Failures of this type are continuously monitored by alarms.

7.4.2.1.2.3.1.18 Access to Set Point Adjustment (IEEE 279, Paragraph 4.18)

Access to setpoint adjustment is under administrative controls.

7.4.2.1.2.3.1.19 Identification of Protective Actions (IEEE 279, Paragraph 4.19)

Protective actions are directly indicated and identified by annunciator operation or action of the trip unit which permits convenient visible verification of the trip unit actuation. The annunciation of trips fulfills the requirements of this criterion.

7.4.2.1.2.3.1.20 Information Readout (IEEE 279, Paragraph 4.20)

The RCIC control system is designed to provide the operator with accurate and timely information pertinent to its status. It does not introduce signals into other systems that could cause anomalous indications confusing to the operator. Periodic testing is provided for verifying the operability of the RCIC components. Proper selection of test periods compatible with the historically established reliability of the components avails, complete and timely indications.

Sufficient information is provided on a continuous basis so that the operator can have a high degree of confidence that the RCIC function is available and/or operating properly.

7.4.2.1.2.3.1.21 System Repair (IEEE 279, Paragraph 4.21)

The RCIC control system is designed to permit repair or replacement of components.

7.4.2.1.2.3.1.22 Identification (IEEE 279, Paragraph 4.22)

All controls and instruments are located in specific main control room panel which are clearly identified by nameplates.

7.4.2.1.2.3.2 IEEE 323 General Guide for Qualifying Class 1E Electric Equipment For Nuclear Power Generating Stations

Specific conformance to requirements of IEEE 323 is covered in Section 7.1.2.5 and Section 3.11.

7.4.2.1.2.3.3 IEEE 338 Criteria for Periodic Testing of Nuclear Power Generating Station Protection Systems

The RCIC system is fully testable during normal operation in conformance with IEEE 338. For further discussions refer to Subsections 7.4.2.1.2.3.1.9 and 7.4.2.1.2.3.1.10.

7.4.2.1.2.3.4 IEEE 344 Guide for Seismic Qualification of Class I Electric Equipment for Nuclear Power Generating Stations

The conformance to the requirements of IEEE 344 is detailed in Section 3.10.

7.4.2.2 Standby Liquid Control System (SLCS) Instrumentation and Controls

7.4.2.2.1 General Functional Requirements Conformance

Redundant positive displacement pumps, explosive valves, and control circuits for the standby liquid control system components have been provided in Section 7.4.1.2. This constitutes all of the active equipment required for injection of the sodium pentaborate solution. Continuity relays provide monitoring of the explosive valves, and indicator lights provide indication on the reactor control bench board of system status. Testability and redundant power sources are described in subsections 7.4.2.2.2.1.3 and 7.4.1.2.2.

Chapter 15 and Appendix A of Chapter 15 examine the system-level aspects of the subject system under applicable plant events. Loss of plant instrument air of cooling water will not, by itself, prevent reactor shutdown capability.

7.4.2.2.2 Specific Regulatory Requirements Conformance

7.4.2.2.2.1 NRC Regulatory Guides Conformance

7.4.2.2.2.1.1 NOT USED

7.4.2.2.2.1.2 NOT USED

7.4.2.2.2.1.3 RG 1.22 - Periodic Testing of Protection System Actuation Functions

SLCS is capable of testing from initiation to actuated devices, except squib valves, during normal operation. In the test mode, demineralized water is circulated in the SLCS loops rather than sodium pentaborate. The explosive valves may be tested when plant is shut down. Otherwise, continuity in the explosive valve initiation circuits is continuously monitored during plant operation.

7.4.2.2.2.1.4 RG 1.29 - Seismic Design Classification

The controls essential to the operation of the SLCS are classified as Seismic Category I and are qualified to remain functional following a SSE.

7.4.2.2.2.1.5 RG 1.30 - Quality Assurance Requirements for the Installation, Inspection, and Testing of Instrumentation and Electric Equipment

Conformance to RG 1.30 is discussed in Section 7.1.2.6.

7.4.2.2.2.1.6 NOT USED

7.4.2.2.2.1.7 RG 1.47 - Bypassed and Inoperable Status Indication for Nuclear Power Plant Safety System

System level bypass condition is automatically indicated as described in Section 7.4.1.2. The removal of equipment for servicing is indicated by an administratively controlled display.

7.4.2.2.2.1.8 RG 1.53 - Application of the Single-Failure Criterion to Nuclear Power Plant Protection Systems

SLCS is a backup method of manually shutting down the reactor to cold subcritical conditions by independent means other than the normal method by the control rod system. It is not necessary for SLCS to meet the single-failure criterion. The heating elements, the discharge pumps and pump motors, and the explosive valves are redundant so that no single failure in one of these components will cause or prevent initiation of SLCS.

7.4.2.2.2.1.9 RG 1.62 - Manual Initiation of Protective Action

SLCS may be initiated manually from the main control room. The timing associated with SLCS is large compared to ten minutes so that the operator will have sufficient time to initiate SLCS if necessary.

7.4.2.2.2.1.10 RG 1.63 - Electric Penetration Assemblies in Containment Structures for Water-Cooled Nuclear Power Plants

Conformance to RG 1.63 is discussed in Chapter 8.

7.4.2.2.2.1.11 RG 1.75 - Physical Independence of Electrical System

Physical independence of electrical systems of the SLCS is provided by channel independence for sensors exposed to each process variable using electrical and mechanical separation. Physical separation is maintained between redundant elements adding to reliability of operation.

7.4.2.2.2.1.12 RG 1.89 - Qualification of Class 1E Equipment for Nuclear Power Plants

Conformance to RG 1.89 is discussed in Section 3.11.

7.4.2.2.2.1.13 Regulatory Guide 1.100 - Seismic Qualification of Electrical Equipment for Nuclear Power Plants

See Section 3.10 for discussion of the degree of conformance.

7.4.2.2.2.1.14 Regulatory Guide 1.105 - Instrument Set Points

See Subsection 7.1.2.6.25 for discussion of the degree of conformance.

7.4.2.2.2.1.15 Regulatory Guide 1.118 - Periodic Testing of Electrical Power and Protection Systems

See Subsection 7.1.2.26 for discussion of the degree of conformance.

7.4.2.2.2.2 NRC Regulations Conformance - 10 CFR Appendix A Requirements

7.4.2.2.2.2.1 General Design Criterion 13

The sodium pentaborate tank temperature and level and explosive valves control circuit continuity are monitored and annunciated.

7.4.2.2.2.2.2 General Design Criterion 26

SLCS is a backup method of manually shutting down the reactor to cold subcritical conditions by independent means other than the normal method by the control rod system.

7.4.2.2.2.2.3 General Design Criterion 27

The system provides reactivity control with sufficient margin to assure that the core is maintained cool.

7.4.2.2.2.2.4 General Design Criterion 28

The SLCS is designed to bring the reactor from full power to subcritical condition.

7.4.2.2.2.2.5 General Design Criterion 29

SLCS maintains the reactor subcritical by introducing poison into the reactor in the event the control rods fail to achieve subcriticality in the reactor.

7.4.2.2.2.3 Conformance to Industry Codes and Standards

7.4.2.2.2.3.1 IEEE 279

7.4.2.2.2.3.1.1 General Functional Requirement (IEEE 279 Paragraph 4.1)

SLCS is manually initiated by operator action. Display instrumentation in the main control room provide the operator with information on reactor vessel water level, pressure, neutron flux level, control rod position, and scram valve status.

7.4.2.2.2.3.1.2 Single Failure Criterion IEEE 279, Paragraph 4.2)

The standby liquid control system is a backup method of manually shutting down the reactor to cold subcritical conditions by independent means other than the normal method by the control rod system. It is not necessary for SLCS to meet the single failure criterion. However, the discharge pumps and pump motors. the explosive valves; and the storage tank outlet valves are redundant so that no single failure in one of these components will cause or prevent initiation of SLCS.

7.4.2.2.2.3.1.3 Quality of Components and Modules (IEEE 279, Paragraph 4.3)

The control components of SLCS are qualified Class 1E in accordance with IEEE 323.

7.4.2.2.2.3.1.4 Equipment Qualification (IEEE 279, Paragraph 4.4)

No components of SLCS are required to operate in the drywell environment. A maintenance valve and isolation check valve are the only components located inside the drywell and the maintenance valve is normally locked open. Other SLCS equipment is located outside the drywell and is capable of operation following an SSE.

7.4.2.2.2.3.1.5 Channel Integrity (IEEE 279, Paragraph 4.5)

SLCS is not required to operate during a decision basis accident. It is designed to remain functional following an SSE.

7.4.2.2.2.3.1.6 Channel Independence (IEEE 279, Paragraph 4.6)

SLCS is a backup method of manually shutting down the reactor to cold subcritical conditions by independent means other than the normal method by the control rod system. It is therefore kept independent of the control rod scram system.

There are two channels of control circuits, discharge pumps and motors, explosive valves and storage tank discharge valves. These two channels are independent of each other, so that failure in one channel will not prevent the other from operating.

7.4.2.2.2.3.1.7 Control and Protection Interaction (IEEE 279, Paragraph 4.7)

SLCS has no interaction with plant control systems. It has no function during normal plant operation and it is completely independent of control systems and other safety systems.

7.4.2.2.2.3.1.8 Derivation of System Inputs (IEEE 279, Paragraph 4.8)

Display instrumentations in the main control room provide the operator with information on reactor vessel water level, pressure, neutron flux level, control rod position and scram valve status. Based on this information, the operator can manually initiate SLCS.

7.4.2.2.2.3.1.9 Capability of Sensor Checks (IEEE 279, Paragraph 4.9)

The explosive valve control circuits continuity is continuously monitored and is indicated in the main control room.

The testability of the sensors that provide information on reactor water level, pressure, and neutron flux, is discussed in Sections 7.2 and 7.3 and Topical Report NED0-21617-A.

7.4.2.2.2.3.1.10 Capability for Test and Calibration (IEEE 279, Paragraph 4.10)

The explosive valves may be tested during plant shutdown. The explosive valve control circuits are continuously monitored and indicated in the main control room. The remainder of the SLCS may be tested during normal plant operation to verify each element passive or active is capable of performing its intended function. In the test mode, demineralized water instead of sodium pentaborate solution is circulated from and back to the test tank.

7.4.2.2.2.3.1.11 Channel Bypass or Removal from operation (IEEE 279, Paragraph 4.11)

The discharge pumps and pump motors are redundant, so that one pump may be removed from service during normal plant operation in accordance with Technical Specification 3.1.7.

7.4.2.2.2.3.1.12 Operating Bypass (IEEE 279, Paragraph 4.12)

SLCS has no function during normal plant operation.

7.4.2.2.2.3.1.13 Indication of Bypass (IEEE 279, Paragraph 4.13)

Removal of components from service is manually indicated in the main control room.

7.4.2.2.2.3.1.14 Access to Means for Bypass IEEE 279, Paragraph 4.14)

Removal of components from service during normal plant operation is under administrative control.

7.4.2.2.2.3.1.15 Multiple Sets Points (IEEE 279, Paragraph 4.15

The actual injection operation of SLCS is not dependent on or affected by set points because the system is manually initiated.

7.4.2.2.2.3.1.16 Completion of Protective Action Once it is Initiated (IEEE 279. Paragraph 4.16)

The explosive valves remain open once fired, and once initiated the injection valves will not close and discharge pump motors will not stop running unless terminated by operator action.

7.4.2.2.2.3.1.17 Manual Initiation (IEEE 279, Paragraph 4.17)

SLCS may only be manually initiated.

7.4.2.2.2.3.1.18 Access to Set Point Adjustments, Calibration and Test Points (IEEE 279, Paragraph 4.18)

The actual injection operation of SLCS is not dependent on or affected by any set point adjustment or calibration, because the system is manually initiated. The control circuits, discharge pumps, pump motors, and motor-operated valves are accessible for test and service. Setpoint adjustment for Boron solution temperature and level are inside the containment or within the main control room and are, therefore, under administrative control.

7.4.2.2.2.3.1.19 Identification of Protective Actions (IEEE 279, Paragraph 4.19)

The explosive valve status, once fired, is indicated in the main control room. Other indications of SLC action are noted in Subsection 7.4.1.2.5.2.

7.4.2.2.2.3.1.20 Information Readout (IEEE 279, Paragraph 4.20)

The discharge pressure of sodium pentaborate pumps is indicated in the main control room. Also, storage tank level is indicated in the main control room.

7.4.2.2.2.3.1.21 System Repair (IEEE 279, Paragraph 4.21)

The control circuits, pumps and pump motors may be repaired or replaced during normal plant operation. This is possible because of the redundant electrical control train provided.

7.4.2.2.2.3.1.22 Identification (IEEE 279, Paragraph 4.22)

Controls and instrumentation are located in main control room and local panels and are clearly identified by nameplates.

7.4.2.2.2.3.2 IEEE 308 Criteria for Class 1E Power Systems for Nuclear Power Generating Stations

SLCS loads are physically separated and electrically isolated into redundant load groups so that safety action provided by redundant counter parts is not compromised.

7.4.2.2.2.3.3 IEEE 323 - General Guide for Qualifying Class I Electric Equipment for Nuclear Power Generating Stations

The controls essential for injection of SLCS are qualified Class 1E. Specific conformance to requirements of IEEE 323 is covered in Section 7.1.2.5.

7.4.2.2.2.3.4 IEEE 338 - Criteria for Periodic Testing of Nuclear Power Generating Station Protection Systems

Except for the explosive valves, the design of SLCS permits periodic testing of the system from initiation to actuated devices. The explosive valves that control circuit continuity is continuously monitored and indicated in the main control room. The explosive valves can be test fired only during each refueling outage.

7.4.2.2.2.3.5 IEEE 344 - Guide for Seismic Qualification of Class 1 Electric Equipment for Nuclear Power Generating Stations

The control equipment essential to injection of SLCS are classified as Seismic Category I and will remain functional following an SSE. Qualification and documentation procedures used for Seismic Category I equipment are discussed in 3.10.

7.4.2.3 Reactor Shutdown Cooling Mode (RHR) – Instrumentation and Controls

7.4.2.3.1 General Functional Requirements Conformance

The design of the reactor shutdown cooling mode of the RHR system meets the general functional requirements as follows:

(1) Valves.

Manual control and position indication is provided in the main control room. No single failure in a valve electrical circuitry can result in loss of capability to perform a safety function.

Interlocks are provided to close the valves if an isolation signal is present or if high reactor pressure exists.

(2) Instrumentation.

Instrumentation is provided for shutdown flow, heat exchanger service water flow and temperature. Head spray flow indication is provided.

(3) Annunciation.

Indication of valve motor overload, heat exchanger cooling water outlet high temperature, shutdown suction header high pressure, and pump motor overload are annunciated in the main control room, either individually or as part of group alarms.

(4) Pumps.

Manual controls and stop and start indicators are provided in the main control room. Interlocks are provided to trip the pumps if the shutdown suction valves are not open and no other suction path exists.

Appendix A of Chapter 15 examines the protective sequences relative to the above event and equipment. Chapter 15 considers the operation and the system-level qualitative aspects of this system.

Loss of plant instrument air or cooling water will not, by itself, prevent reactor shutdown capability.

7.4.2.3.2 Specific Regulatory Requirements Conformance

7.4.2.3.2.1 Conformance to NRC Regulatory Guides

The regulatory guides as applied for ECCS are also applicable to RHR shutdown cooling.

7.4.2.3.2.1.1 Regulatory Guide 1.6

See Subsection 7.3.2.1.2.1.1.

7.4.2.3.2.1.2 Regulatory Guide 1.22

See Subsection 7.3.2.1.2.1.3.

7.4.2.3.2.1.3 Regulatory Guide 1.29

See Subsection 7.3.2.1.2.1.4.

7.4.2.3.2.1.4 Regulatory Guide 1.32

See Subsection 7.3.2.1.2.6.

7.4.2.3.2.1.5 Regulatory Guide 1.47

See Subsection 7.3.2.1.2.1.7.

7.4.2.3.2.1.6 Regulatory Guide 1.53

See Subsection 7.3.2.1.2.1.8.

7.4.2.3.2.1.7 Regulatory Guide 1.62

See Subsection 7.3.2.1.2.1.9.

7.4.2.3.2.2 Conformance to NRC Regulations - 10 CFR 50 Appendix A Requirements

7.4.2.3.2.2.1 Criteria 19 through 24

Conformance to these criteria is shown in Subsection 7.3.1.1.1.6. This system is actually an operating mode of the RHR System.

7.4.2.3.2.2 General Design Criterion 34 - Residual Heat Removal

The Reactor Shutdown Cooling System removes residual heat from the reactor when it is shut-down and the main steamlines are isolated to maintain the fuel and reactor coolant pressure boundary within design limits. Redundant channels are provided to assure performance, even with a single failure. On-site and off-site power are provided in the event that either source is not available when shutdown cooling is needed. Subsection 3.1.2.4.5 provides a discussion of the RHR system compliance with General Design Criteria 34. Subsection 5.2.5 provides a

discussion of the leak detection system and its application to the RHR system.
Subsystem 15.2.9 discusses a backup method for disposing of residual heat should the normal shutdown line become unavailable during shutdown.

7.4.2.3.2.3 Conformance to Industry Codes and Standards

7.4.2.3.2.3.1 IEEE 279

See Subsections 7.3.2.1.2.3.1 and 7.3.2.4.3.1.1 on RHR containment spray.

7.4.2.3.2.3.2 IEEE 308

See Subsection 7.3.2.1.2.3.2

7.4.2.3.2.3.3 IEEE 323

See Subsection 7.1.2.5.

7.4.2.3.2.3.4 IEEE 344

See Subsection 3.10.

7.4.2.3.2.3.5 IEEE 379

See Subsection 7.3.2.1.2.3.6.

7.4.2.4 Remote Shutdown System (RSS)

7.4.2.4.1 General Functional Requirements Conformance

The remote shutdown capability, by itself, does not perform any safety related or protective function. This system does interface with safety related systems, such as RHR and RCIC and meets the design criteria for those systems. All design criteria for the remote shutdown capability are addressed in the respective design requirements sections.

Appendix A of Chapter 15 examines the protective sequences relative to this event and equipment. Chapter 15 considers the operation and the system-level qualitative aspects of this plant capability.

7.4.2.4.2 Specific Regulatory Requirements Conformance

7.4.2.4.2.1 NRC Regulatory Guides Conformance

7.4.2.4.2.1.1 Regulatory Guide 1.29 - Seismic Design Classification

This guide is not applicable to the RSS by itself. Components which interface with other systems meet the same qualifications as the interfacing system. See Section 3.10.

7.4.2.4.2.1.2 R.G. 1.68 - Initial Startup Test Program to Demonstrate Remote Shutdown

Conformance to this Regulatory Guide is discussed in Chapter 14.

7.4.2.4.2.1.3 R.G. 1.75 - Physical Independence of Electric Systems

See Subsection 7.1.2.6.19

7.4.2.4.2.1.4 Regulatory Guide 1.89 - Qualification of Class 1E Equipment for Nuclear Power Plants

This guide is not applicable to the RSS by itself. Components which interface with other systems meet the same qualification standards as the interfacing systems. Such standards for Class 1E systems are addressed in Section 3.11.

7.4.2.4.2.1.5 Regulatory Guide 1.100 - Seismic Qualification of Electrical Equipment for Nuclear Power Plants

This guide is not applicable to the RSS by itself. Components which interface with other systems meet the same qualification standards as the interfacing system. Such standards for Class 1E systems are addressed in Section 3.10.

7.4.2.4.2.2 NRC Regulations Conformance - 10 CFR 50 Appendix A Requirements

7.4.2.4.2.2.1 General Design Criteria 19

The remote shutdown system consists of equipment outside the main control room which is sufficient to provide and assure prompt hot shutdown of the reactor and to maintain safe conditions during hot shutdown. The equipment also provides capability for subsequent cold shutdown of the reactor.

7.4.2.4.2.3 Conformance to Industry Codes and Standards

7.4.2.4.2.3.1 IEEE 279 - Criteria for Protection Systems for Nuclear Power Generating Stations

During normal plant operation the remote shutdown system interfaces with and becomes part of the RCIC and RHR systems. During this time the interfacing remote shutdown instrumentation and controls maintains channel independence required by IEEE 279, Paragraph 4.6, as discussed in sections covering the RCIC and RHR Systems.

7.4.2.4.2.3.2 IEEE 323 - General Guide for Qualifying Class 1 Electric Equipment for Nuclear Power Generating Stations

The components of the remote shutdown panel were designed and purchased to the requirements of the interfacing system. These qualification requirements are discussed in the sections of this document which address the interfacing systems.

7.4.2.4.2.3.3 IEEE 344 - Guide for Seismic Qualification of Class I Electric Equipment for Nuclear Power Generating Stations

The components of the remote shutdown panel were designed and purchased to the requirements of the interfacing system. These qualification requirements are discussed in the sections of this document which address the interfacing systems.

TABLE 7.4-1
THIS TABLE HAS BEEN INTENTIONALLY DELETED

TABLE 7.4-2
REACTOR SHUTDOWN COOLING BYPASSES AND INTERLOCKS

VALVE FUNCTION MANUAL OPEN	REACTOR PRESSURE EXCEEDS SHUTDOWN	ISOLATION VALVE CLOSURE SIGNAL
Inboard suction isolation	Cannot open	Cannot open
Outboard suction isolation	Cannot open	Cannot open
Reactor injection	Cannot open	Cannot open
Head spray	Cannot open	Cannot open
Radwaste discharge inboard	Can open	Cannot open
Radwaste discharge outboard	Can open	Cannot open
Valve Function Auto (A) close or manual (M) close		
Inboard suction isolation	Closes A and M	Closes A and M
Outboard suction isolation	Closes A and M	Closes A and M
Reactor injection	Closes A and M	Closes A and M
Head spray	Closes A and M	Closes A and M
Radwaste discharge inboard	Closes A and M	Closes A and M
Radwaste discharge outboard	Closes A and M	Closes A and M

7.5 SAFETY RELATED DISPLAY INSTRUMENTATION

7.5.1 Description

7.5.1.1 General

This section describes the instrumentation which provides information to the operator to enable him to perform required safety and power generation functions.

The Safety Related Display Instrumentation is listed in Table 7.5-1. It tabulates equipment illustrated on the various system P&IDs and IEDs discussed in Sections 7.2, 7.3, 7.4, and 7.6.

The instrumentation and ranges shown or referenced in Table 7.5-1 are selected on the basis of providing the reactor operator the necessary information to perform normal plant maneuvers and yet the capability to track process variables pertinent to safety during expected operational perturbations.

The Elementary Diagrams illustrate separation of redundant display instrumentation and electrical isolation of redundant sensors and channels. The P&IDs, IEDs, and Elementary Diagrams adequately illustrate the redundancy of monitored variables and component sensors and channels.

Nuclenet design provides an optimized operator/plant interface through the reduction of panel sizes and the logical grouping and simplification of controls and information displays. Where appropriate, considerable reduction in console (control panel) size is accomplished by simplifying controls and presenting normal operating data and supporting graphic displays on computer-controlled color displays. The computer systems are discussed in Subsections 7.7.1 and 7.7.2. A hardwired, independent annunciator system provides additional confirmation of the status of plant systems and components, and all system controls and switches remain conventionally hard-wired. The annunciator system is discussed in Subsections 7.7.1 and 7.7.2. Wherever the status or action of safety systems or safety-related information is concerned, additional hard-wired conventional display and/or indicating devices are used. The design stresses that the presentation of plant information to the operator be done in such a manner that efficient operation is enhanced. The partial or complete failure of the Nuclenet computer system will have no adverse effect upon continued safe operation of the unit.

Nuclenet design also incorporates the Power Generation Control Complex (PGCC) described in General Electric Licensing Topical Report, NEDO-10466-A. PGCC allows improved control of cable routing in the main control room while maintaining strict separation requirements.

The arrangement of the main control room is shown on Figure 7.5-1. This figure shows the relative location of the eight panels, benchboards, and consoles in the central control room area which serve as the primary operator interface with the plant. These panels are the Principal Plant Console (PPC) (P680), the Reactor Core Cooling Systems Benchboard (RCCS) (P601), Diesel Generator Benchboard (P877), the Standby Information Panel (SIP) (P678), and three Balance of Plant (BOP) Benchboards (P800, P801, P870). Their individual descriptions are given in the following sections.

7.5.1.1.1 Principal Plant Console (P680)

The PPC (also called the nuclenet control console) is the primary operator interface for monitoring and controlling plant operational systems. This console also contains some safety-related controls and hard-wired displays. The console is an angled, U-shaped, low-profile console and is approximately 16 ft long. Figure 7.5-2 shows the general arrangement of the console. The control functions that are located on the PPC are those that are required for normal operation of the nuclear unit. The functions that have been included are integrated on a unit basis as opposed to the use of separate nuclear boiler and turbine-generator benchboards. Drawing 828E320 shows the system area assignment of space, within each area, for the hard-wired annunciators, displays, controllers and other instruments, and control switches and indicator lights. The overall shape and size of the console, combined with the centralized grouping of major plant system controls and displays, enhances the operator's interface with the plant processes. His awareness of and control response capabilities to changing plant conditions are thereby improved.

The center section of the PPC contains integrated controls and displays for the reactor protection system, neutron monitoring system, The Rod Control and Information System, including the core display map and display control system. A detailed description of the design and functioning of these systems, the information displayed, and the control actions required by the operator is given in Sections 7.2, 7.6.1.5, 7.6.2.5, 7.7.1.2, and 7.7.2.2. The display control system is discussed in Section 7.7.1.21 and 7.7.2.21.

7.5.1.1.2 Standby Information Panel (P678)

The Standby Information Panel (SIP) is functional]y complementary to the displays on the Principal Plant Console. In case of a partial or complete failure of the Display Control System and the subsequent attendant loss of some or all data displays on the PPC, the standby information panel provides information which is required to perform plant operating activities.

The SIP is positioned behind the PPC so that the operator has a clear view of the panel area where indicators and other display and recording devices are mounted. An outline of the SIP is provided in Drawing 866E441.

7.5.1.1.3 Reactor Core Cooling Systems Benchboard (P601)

The RCCS Benchboard provides all annunciators, necessary, recorders, indicators, and control functions for Division 1, 2, and 3 Engineered Safety Features. The layout of the benchboard, shown in Drawing 793E945, is functionally similar to designs approved for use on previous BWR's. Annunciators, indicators, and recording devices located on the RCCS benchboard are visible to an operator at the Principal Plant Console.

7.5.1.1.4 Balance of Plant Benchboards (P800, P801, P870)

The BOP Benchboards contain the annunciators, meters, recorders, controllers, indicators, and control devices for those plant systems and functions which do not require frequent attention or a rapid operator response. The operator generally has an extended period of time available to respond to control requirements on the BOP Benchboards. Annunciators, indicators, and displays can be seen by an operator at the Principal Plant Console. BOP Benchboard outline is shown in Figure 7.5-6.

7.5.1.1.5 Diesel Generator Benchboard (P877)

The Diesel Generator Benchboard provides annunciation, necessary recorders, indicators and control functions for operation of Division 1 and 2 Engineered Safety Features diesel generators. The layout of the benchboard, shown in Figure 7.5-10, is functionally similar to designs approved for use on previous BWR's. All annunciators, indicators, and recording devices located on the Diesel Generator Benchboard are visible to an operator at the Principal Plant Console.

7.5.1.2 Normal Operation

The indicators and recorders for the plant process variables are described elsewhere in this chapter and are shown on the P&ID's for the various system. Hard-wired indicators and recorders are selected on the basis of being able to provide the operator the necessary information to perform all the normal plant maneuvers with the required precision and being able to track all the process variables pertinent to safety during expected operational perturbations. These devices are mounted on the Standby Information Panel, Reactor Core Cooling Benchboard, or Balance of Plant Benchboard, according to the system which they serve and the functional classification of that system.

7.5.1.3 Abnormal Transient Occurrences

The ranges of indicators and recorders provided are capable of covering the process variables and provide adequate information for all abnormal transient events.

7.5.1.4 Accident Conditions

The DBA-LOCA is the most extreme postulated operational action event. Information readouts are designed to accommodate this event from the standpoint of operator action, information, and event tracking requirements and, therefore, will cover all other design-basis events or incident requirements. The annunciators discussed in this section are informational devices only and not part of the Safety Related Display Instrumentation (SRDI) and not indicators to direct operator action. They are addressed here because of the additional information they provide to the operator as a suppliment to SRDI devices.

7.5.1.4.1 Initial Accident Event

The design basis of all engineered safety features to mitigate the accident event takes into consideration that no operator action or assistance is assumed for the first ten minutes of the event. This requirement, therefore, makes it mandatory that all protective action necessary in the first ten minutes be "automatic". Although continuous tracking of process variables is available, no operator action based on them is required.

7.5.1.4.2 Post-Accident Tracking

No operator action (and, therefore, no post-accident information) is required for at least ten minutes following an accident although the various monitoring devices are continuously tracking and indicating important parameter information and displaying it to the operator as well as recording appropriate data.

The DBA-LOCA serves as the envelope accident sequence event to provide and demonstrate the plant's post-accident tracking capabilities. All other accidents have less severe and limiting tracking requirements.

The following process instrumentation provides information to the operator after a design basis loss-of-coolant accident to monitor plant conditions. The instrumentation is also operable before and after a SSE.

7.5.1.4.2.1 Reactor Water Level

(1) Two wide-range water level signals are transmitted from two independent differential pressure transmitters and are recorded on two, two-pen recorders located in the Main Control Room. One pen records the wide-range level and the other pen records the reactor pressure on each of the two recorders. These recorders are located on the RCCS benchboard. One recorder monitors Division 1 instrumentation and the other Division 2 instrumentation. Their design provides information over the full water level range for normal operation, abnormal transients, and accident conditions. The differential pressure transmitters have one side connected to a condensing chamber reference leg and the other side connected directly to a vessel nozzle, for the variable leg. The water level system is not compensated for variation in reactor water density and is calibrated to be most accurate at operational pressure and temperature conditions. The range of the recorded level is from the top of the feedwater control range (just above the high-level turbine trip point) down to a point near the top of the active fuel. The power sources for the two channels are the Division 1 and 2 instrument a-c buses fed by the Class 1E Power System buses. The feedwater control system has other reactor water level recorders and indicators in the Main Control Room.

Generic Letter 92-04 and NRC Bulletin 93-03 had addressed an issue where water in the RPV water level reference legs made up by the steam condensing chambers could be high in concentration of non-condensable gases. During depressurization, the high gas concentration could come out of solution causing a false high level indication. To comply with the generic letter and bulletin, CPS has installed a keep-fill system where water from the CRD system is fed into the Division 1 and 2 reference legs. This keeps the legs full of water with a low concentration of non-condensable gases. The low flow rate, approximately 4 lb/hr, does not impact the accuracy of the water level signals.

If a channel of keep fill is not available, then the compensatory action of NRC Bulletin 93-03 would be in effect. This consists of enhanced monitoring during depressurization.

(2) The narrow, upset and shutdown zone water levels and the fuel zone water level recorder are not safety related and are discussed in Subsection 7.7.1.1.3.1.2.

(3) In order to minimize the level measurement error due to changes in the drywell temperature, the differences in vertical drops (from the condensing chamber to the drywell penetration) between the reference and variable legs of the wide and narrow ranges are within approximately ±1 foot. In order to minimize the level measurement error due to boiling in the sense lines, the vertical drop in the

reference legs shared by the narrow, wide and fuel zone ranges is less than 2.5 feet.

7.5.1.4.2.2 Reactor Pressure

(1) Two high-range reactor pressure signals with range as itemized in Table 7.1-13 for RPV pressure are transmitted from two independent pressure transmitters and are recorded on two 2-pen recorders. These signals share the recorders described in Subsection 7.5.1.4.2.1.

(2) Two low-range reactor pressure signals with range as itemized in Table 7.1-14 for RPV pressure are transmitted from two independent pressure transmitters and are recorded on two 3-pen recorders in the main control room. One pen records the low-range reactor pressure, the second pen records the suppression pool level, and the third pen records the low-range containment pressure. These recorders are located on the RCCS benchboard. One recorder monitors Division 1 instrumentation and the other monitors Division 2 instrumentation. The power sources are from Class 1E power systems.

7.5.1.4.2.3 Reactor Shutdown, Isolation and Core Cooling Indication

7.5.1.4.2.3.1 Reactor Operator Information and Observations

The information furnished to the main control room operator permits him to assess reactor shutdown, isolation, and availability of emergency core cooling following the postulated accident.

(1) Operator verification that reactor shutdown has occurred may be made by observing one or more of the following indications:

a. The control rod status lights will be indicating each rod fully inserted. The power source is a non-class 1E ac distribution panel. These lights are located on the Principal Plant Console. (See Drawing 828E320)

b. Control rod scram valve status lights will be indicating open valves. The power source is an instrument a-c bus. These lights are located on the PPC.

c. The neutron monitoring power range channels and recorders will indicate decreasing neutron flux or be downscale. Power sources for the Neutron flux signals are the NSPS buses, and the power source for the recorders is a non-class 1E ac distribution panel. Recorded indication is provided on the Standby Information Panel.

d. Indicators and supplementary annunciators for the reactor protection system variables and trip logic will be in the actuated state. The power source for the indicators is ac inverted from divisional dc batteries. The power source for the supplementary annunciators is dc from the station battery. These devices are located on the PPC.

e. Supplementary information from the PMS by logging of trips and control rod position log. The power source is the computer power supply from battery-backed uninterruptible power.

(2) Reactor isolation also occurs after the accident, as various environmental and process variables exceed their set points. The operator may verify reactor isolation by observing one or more of the following indications:

a. The isolation valve position lamps in each affected system indicate valve closure by direct means. Each motor-operated isolation valve has limit switches operated by the motor operator. Air-operated isolation valves have limit switches operated by the valve stem. The power source for the valve position lamps is the same as for the associated valve operator. These lamps are on the RCCS benchboard.

b. The main steam line flow indication will be downscale. This information is provided on the SIP. The power source is the instrument ac bus.

c. Indication for the containment and reactor vessel isolation system variables and trip logic will be in the tripped state. These indicators are located on the RCCS benchboard. The power source is dc from the station battery.

d. Supplementary information from the PMS.

(3) Operation of the emergency core cooling and the RCIC system following the accident may be verified by observing the following indications, which except as noted are located on the RCCS benchboard;

a. Indicators and status lights for high pressure core spray, low pressure core spray, residual heat removal, automatic depressurization system, and reactor core isolation cooling system sensor initiation logic trips. The power source is from the appropriate divisional supply.

b. Flow and pressure indications for each emergency core cooling system are provided and are operable before and after a Safe Shutdown Earthquake (SSE). The power sources are independent and from the same Class 1E power system buses as the driven equipment.

c. RCIC isolation valve position lamps directly indicate open valves via limit switches. These limit switches are operated by the motor operator on motor-operated valves, and by the valve stem on air-operated valves. The power source for the valve position lights is the same as the valve motor.

d. Injection valve position lights indicating either open or closed vlaves. Injection valve position inidcations are provided by direct means of limit switches operated by the motor operator. The power source for the position lights is the same as the vlave motor.

e. Relief valve initiation circuit status by open or closed indicator lamps. The power source is the same as for the pilot solenoid.

f. Relief valve position indications are provided by an acoustic-type valve position indicating system that provides open/closed status in the Main Control Room. The power ource is from a Class 1E system bus.

g. Supplementary information from the PMS display located on panel H13-P870. The power source is the computer power supply which utilizes a reliable ac cource including a battery backup.

h. Relief valve discharge pipe temperature monitor located on panel H13-P614. The power source is from an instrument ac bus.

7.5.1.4.2.3.2 System Operation Information-Display Equipment

(1) RCIC

Two meters, one displaying RCIC discharge flow rate and one displaying RCIC pump discharge pressure, are located on the RCCS benchboard.

(2) HPCS

Two meters, one displaying HPCS discharge flow rate and one displaying HPCS pump discharge pressure, are located on the RCCS benchboard.

(3) LPCS

One meter displaying LPCS flow rate is located on the RCCS benchboard.

(4) RHR

The following meters are located on the RCCS benchboard:

a. One meter displaying RHR flow rate for each of the three RHR loops.

b. One meter displaying RHR water temperature for each of the RHR heat exchanger outlets.

c. One meter displaying RHR service water flow rate for each of the two RHR service water loops.

d. There are more instruments monitoring RHR service water. They are described in Subsection 7.5.1.4.2.6.

(5) MSIV/LCS

The following meters are located in the main control room displaying reactor and steam line pressures:

a. One meter displaying main steam line pressure for each of the four MSL.

b. Two meters displaying reactor pressure.

c. One meter and one (low pressure) range meter displaying outboard steam line header pressure.

d. One meter displaying inboard steam line pressure for each of the four steam lines. The instruments are powered from separate 120 Vac divisional power buses.

e. Two meters displaying MSIV leakage control system header pressure.

(6) Containment Atmosphere Monitoring System (CAMS)

The following CAMS display instrumentation is located in the main control room:

a. Two channels of drywell hydrogen and oxygen concentration indication and recording.

b. Two channels of containment hydrogen and oxygen concentration indication and recording.

c. Two channels of drywell gross gamma radiation level indication and recording.

d. Two channels of containment gross gamma radiation level indication and recording.

(7) Miscellaneous

In addition to the above displays, the following also provide information to enable the reactor operator in the main control room to perform post-accident safety functions:

a. Control rod status lamps (powered from a non-class 1E ac distribution panel.)

b. Scram pilot valve status lamps (powered from non-class 1E uninteruptable RPS power supplies.)

c. Neutron flux level meters (powered from the NSPS buses.)

d. Two meters displaying ADS instrument air header pressure. One meter monitors Division 1 instrumentation and the other monitors Division 2 instrumentation.

e. Two meters displaying ADS backup air bottle pressure. One meter monitors Division 1 instrumentation and the other monitors Division 2 instrumentation.

7.5.1.4.2.3.3 System Operation Information-Display Equipment Qualification

The safety-related display instrumentation sensors, modules, cabling, and display equipment are of the same high quality as the safety system's instrumentation. The environmental and seismic qualification of the sensors and modules is discussed in Sections 3.10 and 3.11. The post-accident display instrumentation is of a quality that is consistent with minimum maintenance requirements and low failure rates and is qualified according to IEEE 323.

The post-accident monitoring equipment is environmentally and seismically qualified to continue to operate following a design basis accident.

Redundant elements (such as cables, cable tray components, modules, and interconnecting wiring) are identified according to the requirements of IEEE 384.

7.5.1.4.2.4 Drywell and Containment Indications

Drywell and containment building conditions are indicated and/or recorded by the instrumentation described below.

(1) Containment Pressure Monitoring

a. There are two post accident containment pressure monitoring channels with a range as itemized in Table 7.1-13 for primary containment pressure. One channel monitors Division 1 instrumentation and the other monitors Division 2 instrumentation. Each channel of instrumentation consists of two transmitters, one 3-pen recorder and one 2-pen recorder. These two transmitters per channel overlap and split the required pressure range, thus providing the required measurement range and accuracy. One transmitter provides a low-range signal to one 3-pen recorder. This signal shares the recorder described in Subsection 7.5.1.4.2.2(2) which monitors low range reactor pressure and suppression pool level. The other transmitter provides a high range signal to one 2-pen recorder.

b. Additionally, there are two higher range containment pressure monitoring channels with a range as itemized in Table 7.1-14 for primary containment pressure. The instrumentation consists of two separate transmitters and two 2-pen recorders. One pen records the containment pressure and the other records containment atmosphere temperature. These recorders are mounted on the RCCS benchboard. One channel monitors Division 1 instrumentation and the other monitors Division 2 instrumentation. The power sources for the two channels are the two instrument a-c buses feeding from the Class 1E power system buses. The two monitoring channels are redundant to each other and qualified Seismic Category I and Class 1E.

One pen records the containment pressure and the other records the suppression pool level. The recorders are mounted on the RCCS benchboard in the main control room. The power sources for the two channels are the Class 1E power system buses. The two monitoring

channels are redundant to each other and qualified Seismic Category I and Class 1E.

(2) Drywell Pressure Monitoring

There are two drywell pressure monitoring channels with a range as itemized in Table 7.1-13 for drywell pressure. The instrumentation consists of two separate transmitters and two 2-pen recorders. One pen records the drywell pressure and the other records the drywell average temperature. These recorders are mounted on the RCCS benchboard. One channel monitors Division 1 instrumentation and the other monitors Division 2 instrumentation. The power sources for the two channels are the two instrument a-c buses feeding from the Class 1E power system buses. The two channels are redundant to each other and qualified Seismic Category I and Class 1E.

(3) Suppression Pool Temperature Monitoring

The suppression pool temperature is monitored by 24 sensors with a range as itemized in Table 7.1-13 for suppression pool bulk average temperature. The sensors are located between each SRV discharge pipe and below the minimum suppression pool water level. Twelve sensors are associated with Division 1 and 12 sensors with Division 2. Sensor outputs are recorded on the following recorders:

a. Two multi-point recorders mounted on Panels 1H13-P638 and 1H13-P639 in the main control room. One records the outputs from the eight Division 1 sensors and the other records the outputs from the eight Division 2 sensors. Each recorder is provided with contact closure outputs which actuate an alarm on the RCCS benchboard at high suppression pool temperature. The temperature sensors are located at Elevation 730'-6".

b. Two 2-pen recorders mounted on the RCCS benchboard in the main control room. One records the average output from four Division 1 sensors and the other records the average output from four Division 2 sensors. The second pen is used to monitor the suppression pool level. The temperature sensors are located at Elevation 730'-6".

c. Two 1-pen recorders mounted on the standby information panel in the main control room. One records the average output from four Division 1 sensors and the other records the average output from four Division 2 sensors. The temperature sensors are located at Elevation 726'-10". The instrumentation described in this subparagraph fulfills the requirements of TS 3.3.3.1, Post Accident Monitoring.

Power sources for the two divisions of sensors are the two instrument a-c buses feeding from the Class 1E power system buses. The two divisions are redundant to each other and qualified Seismic Category I and Class 1E.

(4) Suppression Pool Water Level

The suppression pool water level is monitored by water level monitoring channels which measure a level range as itemized in Table 7.1-13 for suppression pool level. The lower end of the measurement range (720'-0") is at the same elevation as the ECCS suction line. Each division of instrumentation consists of two transmitters, one for low range and one for high range.

For each division, the two transmitters over-lap and split the required water level range, thus providing the required measurement range and accuracy:

The high range transmitter (CM system designator) provides a signal to one 2-pen recorder (which also records containment pressure described in Item (1)b above.

The low range transmitter (SM system designator) provides a signal to one 3-pen recorder (which also records containment pressure and reactor pressure described in Subsection 7.5.1.4.2.2(2)).

The power sources for the two suppression pool level instrumentation are the two instrument a-c buses feeding from the Class 1E power system buses. The divisional channels are redundant to each other and qualified Seismic Category I and Class 1E.

(5) Suppression Pool Wide Range Water Level

The suppression pool wide range (primary containment) water level is monitored by two channels of instrumentation which measure a level range as itemized in Table 7.1-14 for suppression pool level. One channel monitors Division 1 and the other monitors Division 2. Each channel of instrumentation consists of six transmitters, one selector switch and one indicator. These six transmitters split the required water level range, thus providing the required measurement accuracy. They provide a signal to one indicator by means of a range selector switch mounted on the RCCS benchboard. These transmitters and the suppression pool water level transmitters described in Item (4) above overlap to provide a full range of water level measurement from the centerline of ECCS suction to the containment maximum floodable water level.

The power sources for the two channels are the two instrument a-c buses feeding from the Class 1E power system buses. The two monitoring channels are redundant to each other and qualified Seismic Category I and Class 1E.

(6) Containment Atmosphere Temperature Monitoring

The containment atmosphere temperature is monitored by eight sensors with a range as itemized in Table 7.1-14 for containment atmosphere bulk temperature. Four sensors are associated with Division 1 and four sensors are associated with Division 2. Each division of four sensor outputs are averaged and the averaged signal is then recorded on one 2-pen recorder. This signal is recorded on the 2-pen recorder described in Subsection 7.5.1.4.2.4(1b) which monitors the high-range containment pressure.

Power sources for the two divisions of sensors and recorders are the two instrument a-c buses feeding from the Class 1E power system buses. The two divisions are redundant to each other and qualified Seismic Category I and Class 1E.

(7) Drywell Atmosphere Temperature Monitoring

The drywell atmosphere temperature is monitored in a similar way as described in Item (6) above except the signal shares the recorder described in Item (2) above. There are eight Containment Monitoring (CM) sensors, four associated with Division 1 and four associated with Division 2, which fulfill the Post Accident Monitoring requirements of Regulatory Guide 1.97. These sensors are Seismic Category I and Class 1E. The range for these instruments is itemized in Table 7.1-13 for drywell atmosphere bulk average temperature.

There are also 14 Drywell Cooling (VP) temperature sensors located at various elevations and azimuths within the drywell. These VP sensors are normally utilized to periodically calculate the arithmetic drywell average air temperature as required by the Technical Specifications during plant operation. These sensors are non-safety related. They have a range of 0-250 degrees Fahrenheit. The instrument number, elevation, and azimuth of these sensors are shown below.

DRYWELL AIR TEMPERATURE SENSORS

Instrument Number		Elevation	Azimuth
a.	ITE-VP033A	729’-0”#	45°
b.	ITE-VP033B	775’-0”	160°
c.	ITE-VP033C	741’-0”	45°
d.	ITE-VP033D	772’-0”	130°
e.	ITE-VP033E	802’-0”	0°
f.	ITE-VP033F	746’-0”	307°
g.	ITE-VP033G	794’-0”	0°
h.	ITE-VP034A	732’-0”#	225°
i.	ITE-VP034B	775’-0”	230°
j.	ITE-VP034C	741’-0”	220°
k.	ITE-VP034D	772’-0”	235°
l.	ITE-VP034E	802’-0”	180°
m.	ITE-VP034F	746’-0”	135°
n.	ITE-VP034G	794’-0”	180°

The instruments at a. and h. are considered to be at the same elevation.

7.5.1.4.2.5 Main Control Room HVAC System

Operation of the Main Control Room HVAC System may be verified by observing the following indications:

a. The Make-up Filter Package Trains, Supply and Return fans status lights are indicated in the main control room. The control power circuits of the driven equipment provide power to the fan operating status lights.

b. System damper position lights indicating either open or closed dampers are provided in the main control room and on local control panels as required. Intermediate damper position is indicated by simultaneous energization of both the open and closed indicating lights. These position indicating lights are actuated by limit switches that are operated directly from the damper shaft. The power sources are the same as the damper motor.

c. The Make-up Filter Package Train flow is indicated and recorded in the main control room. Differential pressure recorders monitor the differential pressure across the demister and prefilter combination, and across the upstream HEPA filter. The downstream HEPA filter differential pressure is indicated in the main control room. The power sources for these instruments are the same as for their respective systems.

d. The main control room differential pressure with respect to the adjacent areas is indicated in the main control room. The power sources for these indicators are the same as their respective HVAC trains.

7.5.1.4.2.6 Shutdown Service Water System

The safety related display instrumentation for the Shutdown Service Water System (SSWS) is located in the main control room. Each subsystem of the SSWS is monitored by independent pressure sensors at each subsystem supply header which transmit signals that are indicated on the control board near the controls for the equipment being cooled by the SSWS. Additionally, each subsystem of the SSWS is monitored by independent temperature sensors at the inlet to the RHR heat exchangers which provides a signal indicated on the RCCS benchboard in the main control room. Each instrument loop is seismically qualified and Class 1E and is powered from the same safety related electrical separation division as the subsystem being monitored.

7.5.1.4.2.7 Standby Gas Treatment System (SGTS)

Operations of the SGTS may be verified by observing the following indications:

a. Standby Gas Treatment System running lights indicate the operation of the equipment. The power sources are the same as for the equipment.

b. System valve and damper open and closed position lights are provided in the main control benchboard. These position indications are actuated by limit switches that are operated directly from the valve stem or damper shaft. The power sources are the same as for the associated valve and damper motor.

c. The filter train flow is indicated and recorded in the main control room. Differential pressure across the upstream and downstream HEPA filters is indicated in the main control room. A recorder monitors the differential pressure across the upstream HEPA filter. Instrument power is supplied by the same Class 1E bus that supplies power to each respective SGTS train.

7.5.1.4.2.8 Combustible Gas Control System

7.5.1.4.2.8.1 Drywell-Containment Mixing System

Safety related controls for the drywell-containment mixing system are located in the main control room. Differential pressure is monitored across each compressor by an electronic differential pressure transmitter. The signal is indicated on the main control board near the control switches. Each instrument loop is seismically qualified, Class 1E, and is powered from the same electrical separation division which provides power to the equipment being monitored. Status lights located above the compressor control switches indicate whether the compressor is running, stopped or tripped.

Position indicating lights are provided on the Standby Information Panel in the main control room for each of the eight check valves in the four vacuum relief lines. These indicating lights are controlled by limit switches on the check valves and indicate closed, intermediate, and open valve position. The indicating lights are powered from Class 1E, Division 1 power. (Q&R 421.12)

7.5.1.4.2.8.2 Hydrogen Recombiner System

Safety related instrumentation for the hydrogen recombiners is located on the local control panels for each recombiner. Recombiner flow and temperature is monitored and indicated on the control panel. Each instrument is seismically qualified, Class 1E, and is powered from the same electrical separation division which powers the equipment being monitored. Status lights in the main control room above the control switch indicate whether the recombiner is running or stopped.

7.5.1.4.2.9 (NOT USED)

7.5.1.4.2.10 Diesel Generator Room Ventilation System

7.5.1.4.2.10.1 Indication

Indication is provided as follows:

a. Diesel Generator Room Ventilation fan status (i.e., on, tripped or off)

b. Diesel Generator Ventilation Oil Room Exhaust Fan Status (i.e., on, tripped or off)

7.5.1.4.2.11 Essential Switchgear Heat Removal HVAC System

7.5.1.4.2.11.1 Indication

Indication is provided as follows:

a. Heat removal fan status (i.e., on, tripped or off), on the MCB.

b. Battery Room exhaust fan status (i.e., on, tripped or off), on the MCB.

7.5.1.4.2.12 ECCS Equipment Room Cooling - HVAC System

7.5.1.4.2.12.1 Indication

Indication is provided as follows:

a. Emergency Core Cooling System fan status (i.e., on, tripped or off)

7.5.1.4.2.13 Shutdown Service Water Pump Room Cooling System

7.5.1.4.2.13.1 Indication

Indication is provided as follows:

a. Shutdown Service Water Pump Room Cooling System fan status (i.e., on, tripped, or off), on the MCB.

b. Room temperature for each SSW pump room

7.5.1.4.2.14 Secondary Containment Area Temperature Monitoring Instrumentation

The secondary containment ambient temperatures are monitored by a total of 40 sensors with an instrument channel range as itemized in Table 7.1-14 for secondary containment area temperature. These sensors are located in various secondary containment areas. These areas are assigned to one of two groups each consisting of 20 sensors which are recorded on multi-point recorders mounted on the standby information panel in the main control room. The recorders are provided with alarm contact outputs which will activate one common high temperature alarm when the temperature of any of the monitored areas reaches a maximum normal operating value (MNOV), and will activate another common high-high alarm when the temperature of any of the monitored areas reaches a maximum safe operating valve (MSOV). The alarms are located on the RCCS benchboard. The areas monitored are identified as follows:

a. Group A

LOCATION	NUMBER OF SENSORS
HPCS Pump Room	1
Auxiliary Building Aisle Elevation 707 feet, 6 inches‘	1
RHR Pump Room A	1
RHR Heat Exchanger Room A	1
RHR Pump Room B	1
RHR Heat Exchanger Room B	1
RHR Pump Room C	1

LOCATION	NUMBER OF SENSORS
Auxiliary Building RCIC Pump Room	1
Auxiliary Building RCIC Instrument Panel Room	1
LPCS Pump Room	1
Auxiliary Building Access Aisle Elevation 737, 0 inches	2
Auxiliary Building Radwaste Pipe Tunnel	1
Auxiliary Building Below Main Steam Tunnel	1
RWCU Pump Room A	1
RWCU Pump Room B	1
RWCU Pump Room C	1
Auxiliary Building Steam Tunnel	1
Fuel Pool Cooling Heat Exchanger Room	2

b. Group B

LOCATION	NUMBER OF SENSORS
Fuel Building General Area Elevation 712 feet, 0 inches	4
Fuel Building Pipe Valve Room	2
Fuel Building Fuel Pool Cooling Pump Room	2
Fuel Building General Area Elevation 737 feet, 0 inches	4
Fuel Building General Area Elevation 744 feet, 0 inches	4
Auxiliary Building MSIV Room A	1
Auxiliary Building MSIV Room B	1
Auxiliary Building Gas Control Boundary	2

7.5.1.4.2.15 Secondary Containment Water Level Monitoring Instrumentation

Secondary containment areas are monitored for flooding by level switches. Each level switch will activate one common high-high water level alarm when the water level of any of the monitored areas reaches a maximum safe operating water level. The alarm is located on the RCCS benchboard. The areas monitored are identified as follows:

a. RCIC Pump Room

b. RHR Pump Room A

c. RHR Pump Room B

d. RHR Pump Room C

e. LPCS Pump Room

f. HPCS Pump Room

g. Fuel Building Elevation 712 feet, 0 inches

7.5.2 Analysis

7.5.2.1 General Functional Requirements

The safety-related and power generation display instrumentation provides adequate information to allow an operator to make correct decisions as bases for manual control actions permitted under normal, abnormal transient, and accident conditions. The Nuclenet design provides the operator with readily accessible information and control of the various plant operational parameters. This is accomplished by the logical organization of functional plant system indicators, displays, controls, and a computer display system into a human-engineered operator interface. The implementation involves the use of five modular console/ panel/benchboards.

Additional information concerning analysis and design criteria applicable to the specific hard-wired indicators, displays and controls, for the various safety-related systems, is provided elsewhere in this chapter with the systems they serve. Redundancy and independence or diversity are provided in all of those information systems which are used as a basis for operator-controlled safeguards action.

The complete failure of the Display Control System, which serves as an active part of the operator/plant interface, does not degrade the quantity or quality of necessary information, presented by hard-wired devices, needed to determine the status or action of plant safety systems. Some safety-related process information is displayed and/or analyzed by this non-safety class Display Control System (DCS), as well as by the conventional hard-wired instruments. In all cases where a safety-related information is shared this way, the DCS is isolated from the safety- related circuitry so that no DCS failure can inhibit or affect that circuit or vice versa.

7.5.2.1.1 Design Criteria

7.5.2.1.1.1 Power Generation Control Complex Criteria

The applicable design criteria for the PGCC aspects of Nuclenet design are provided in General Electric Licensing Topical Report NEDO-10466-A.

7.5.2.1.1.2 Nuclenet Design and Operational Criteria Compliance

7.5.2.1.1.2.1 Design Criteria

(1) Nuclenet is designed to enhance the operational information without degrading the ability of the ESF systems I&C to meet the requirements of their design specifications.

(2) In the implementation of Nuclenet, instruments for the reactor protection system and the engineered safety features meet the system design requirements of the systems they serve. They shall be located at easily visible and accessible positions.

(3) The design employs modular techniques to implement distinct circuits so that the separation and redundancy requirements are satisfied.

(4) All reactor protection system components incorporated by Nuclenet are of at least comparable quality to those components that are integral to the design of related systems and shall have demonstrated operational reliability.

(5) Nuclenet design is such that the IEEE-279 requirement for protection system integrity, independence, and absence of interaction can be maintained from the various controls, indicators, and displays on the console/panel/benchboards through the termination cabinets. The termination cabinets are described in NEDO-10466-A and are incorporated as part of Nuclenet.

(6) Nuclenet makes use of modular control and indication components. Plug-connected cables are used to facilitate removal of the modules. Cables and connectors are easily accessible and identified. Connector separation requires deliberate action.

(7) Cabling is identified at each connection point, in the panels, in the wireways, and in the termination cabinets, so that visual verification of separation is easily made. Connectors and cabling at connection points are clearly marked with system and reference designations.

(8) The Reactor Core Cooling benchboard is physically separated from those benchboards or consoles used for planned operating activities not performed by systems on the RCC benchboard.

(9) Hard-wired standby display capabilities are provided in the main control room to permit operational continuity following a malfunction in or loss of the Display Control System (DCS).

(10) All plant system controls are hard wired. They are external to, and not dependent upon, the computer systems.

(11) Simplification of controls is restricted to manual functions operating independently from, but compatible with, the automatic protective functions.

(12) All safety system functions, either automatic protective or interlocking, including controls, displays, and alarms, are hardwired.

(13) The Display Control System provides an alarm initiated display capability for selected variables. This display also presents relevant parameters associated with the alarmed parameter.

7.5.2.1.1.2.2 Operating Criteria

The Nuclenet design provides for normal plant operation under planned conditions in the absence of significant abnormalities. Operations subsequent to an incident (transient, accident, or special event) are not considered planned operations until the procedures being followed or equipment being used are identical to those used during any one of the defined planned operations. The established planned operations can be considered as a chronological sequence: refueling outage, achieving shutdown, cooldown, refueling outage. The following planned operations are identified.

a. Refueling Outage

b. Achieving Criticality

c. Heatup

d. Reactor Power Operation

e. Achieving Shutdown

f. Cooldown

7.5.2.1.2 Principal Plant Console (P680)

The PPC (shown in Figure 7.5-2 and Drawing 828E320) contains control and display instrumentation which is safety-related, and also control and display instrumentation which is not safety-related.

7.5.2.1.3 Standby Information Panel (P678)

The SIP (shown in Drawing 866E441) contains both safety and nonsafety related instrumentation. The organization of system displays follows the same relative positional relationship when viewed by the operator as is used on the PPC. Certain functions of the following systems appear on the SIP:

(1) Reactor Water Cleanup System

(2) Feedwater System

(3) Recirculation System

(4) Nuclear Boiler and Main Steam Systems

(5) Neutron Monitoring System

7.5.2.1.4 Reactor Core Cooling Systems Benchboard (P601)

The RCCS benchboard (shown in Drawing 793E945) is similar to previously approved designs. Hardwired controls, annunciators, and other instrumentation for the following systems appear on the RCCS benchboard:

(1) CRD Hydraulic Control System

(2) Standby Liquid Control System

(3) Reactor Core Isolation Cooling and Low Pressure Core Spray Systems

(4) RHR A System

(5) Automatic Depressurization A System

(6) Outboard Isolation System

(7) Inboard Isolation System

(8) Automatic Depressurization B System

(9) RHR B and C Systems

(10) HPCS Diesel Generator System

(11) HPCS System

This benchboard has welded steel barriers separating the controls and displays of one division from those of another division, and separating devices associated with any of the divisions from devices not associated with any division. All devices on the RCCS benchboard which are Class 1E, have been previously qualified for Class 1E use. Other criteria stated in Section 7.5.2.1.1.2 apply to the RCC benchboard.

7.5.2.1.5 Balance of Plant Benchboards (P800, P801, P870)

The function and description of the BOP benchboard were given in section 7.5.1.1.4. Instruments, controls, and annunciators are organized by system and function. The following safety and non-safety related systems are represented on these benchboards (shown in Figure 7.5-6):

(1) Main Generator and Auxiliary Power Systems

a. Main Generator, Switchyard, and Auxiliary Electrical Systems

(2) Steam and Power Conversion Systems

a. Turbine and Main Steam Systems

b. Extraction Steam Systems

c. Vents, Drains, Heaters, and Coolers

d. Condensate and Feedwater Systems

e. Condenser Air Removal and Seal Steam Systems

(3) Water Systems

a. Circulating and Cooling Water Systems

b. Service Water Systems

c. Fuel Pool Cooling and Cleanup Systems

d. Suppression Pool Cleanup and Makeup Systems

(4) Other Service and Instrument Systems

a. Instrument and Service Air Systems

b. Drywell and Containment Temperature and Pressure Monitoring

c. Containment Combustible Gas Control System

d. Suppression Pool Temperature and Level Monitoring

e. Control Building HVAC Systems

f. Fire Protection System

g. Standby Gas Treatment Systems

h. Radiological Monitoring Display

The BOP benchboard conforms to criteria in Section 7.5.2.1.1.2.

7.5.2.1.6 Diesel Generators Benchboard (P877)

The Diesel Generator benchboard, shown in Figure 7.5-10, is similar to previously approved designs. Hard-wired controls, annunciators, and other instrumentation for the following systems appear on the Diesel Generator benchboard:

(1) Division 1 Diesel Generator Control System

(2) Division 2 Diesel Generator Control System

This benchboard has welded steel barriers separating the controls and displays of one division from those of another division, and separating devices associated with any of the divisions from devices not associated with any division. All devices on the Diesel Generator benchboard which are Class 1E have been previously qualified for Class 1E use.

7.5.2.2 Normal Operation

Subsection 7.5.1.2 describes the basis for selecting ranges for instrumentation and since abnormal, transient, or accident conditions monitoring requirements exceed those for normal operation, the normal ranges are covered adequately.

7.5.2.3 Abnormal Transient Occurrences

These occurrences are not limiting from the point of view of instrument ranges and functional capability. (See Subsection 7.5.2.4.)

The indications which may be utilized to verify that shutdown and isolation safety actions have been accomplished (see Subsection 7.5.1.4.2.3) meet the requirements of IEEE 279.

7.5.2.4 Accident Conditions

The DBA-LOCA is the most extreme operational event. Information readouts are designed to accommodate this event from the standpoint of operator actions, information, and event tracking requirements, and therefore, will cover all other design basis events or incident requirements.

7.5.2.4.1 Initial Accident Event

The design basis of all engineered safety features to mitigate accident event conditions takes into consideration that no operator action or assistance is required or recommended for the first ten (10) minutes of the event. This requirement therefore makes it mandatory that all protective action necessary in the first ten minutes be automatic. Therefore, although continuous tracking of variables is available, no operator action based on them is intended.

7.5.2.4.2 Post-Accident Tracking

The following process instrumentation provides information to the operator after a DBA loss-of-coolant accident for use in monitoring reactor conditions.

(1) Reactor Water Level and Pressure

Vessel water level and pressure sensor instrumentation described in Subsection 7.5.1.4.2 is redundant, electrically independent, and is qualified to be operable during and after a loss-of-coolant accident in conjunction with an SSE. Power is from independent instrument buses supplied from the two divisional ac buses. This instrumentation complies with the independence and redundancy requirements of IEEE 279 and provides recorded outputs.

The reactor water level and pressure sensors are mounted on two independent local panels. The transmitters and recorders are designed to operate during normal operation and/or post-accident environmental conditions. The design criteria that these instruments must meet are discussed in Subsection 7.1.2.1.7. There are two complete and independent channels of wide range reactor water level and reactor vessel pressure with each channel having readout on a separate two-pen recorder.

The design, considering the accuracy, range and quality of the instrumentation, is adequate to provide the operator with reliable reactor water level and reactor pressure information during normal operation, abnormal, transient, and accident conditions.

(2) Suppression Pool Water Level

This instrumentation is redundant, electrically independent, and qualified to be operable during and after a LOCA in conjunction with an SSE. Power is from independent instrument buses supplied from the two divisional Class 1E ac power buses and complies with the requirements of IEEE 279 and provides recorded outputs.

(3) Drywell and Containment Pressure

This instrumentation is redundant, electrically independent, and is qualified to be operable during and after a LOCA in conjunction with an SSE. Power is from independent instrument buses supplied from the two divisional Class 1E ac power buses and the instrumentation complies with the requirements of IEEE 279 and provides recorded and indicated outputs.

(4) Emergency Core Cooling Systems

Performance of emergency core cooling systems following an accident may be verified by observing redundant and independent indications as described in Subsection 7.5.1.4.2.3.1(3) and fully satisfies the need for operator verification of operation of the system.

Redundancy of instrumentation within the individual ECCS systems is not always provided. However, redundancy is provided within the combination of ECCS systems. Each ECCS is provided with system flow measuring indication and valve status indication allowing the operator to assess the operating conditions.

(5) Continued Shutdown Tracking

The various indications described in Subsection 7.5.1.4.2 provide adequate information regarding status of the reactor vessel level and pressure to allow reactor operators to make proper decisions regarding core and containment cooling operations, and fully satisfies the need for post-accident surveillance of these variables.

(6) MCR Ventilation System

Performance of the HVAC system following an accident may be verified by observing redundant and independent indications as described in subsection 7.5.1.4.2.5 and fully satisfies the need for operator verification of system operation. Redundancy of instrumentation within individual HVAC trains is not provided. However, redundancy is provided by the redundancy of the HVAC trains.

(7) Shutdown Service Water System (SSW)

Performance of the SSW System following an accident may be verified by observing redundant and independent indications as described in subsection 7.5.1.4.2.6 and fully satisfies the need for operator verification of system operation. Redundancy of instrumentation within individual SSW divisional trains is not provided. However, redundancy is provided by the redundancy of the trains.

(8) Hydrogen Control Aspect

The hydrogen control system hydrogen analyzer with indicator, recorder and alarm is designed to automatically operate during LOCA conditions. Hydrogen control system operation following an accident or LOCA condition may be verified by observing the hydrogen concentration recorded in the control room as described in Subsection 7.5.1.4.2.8. Indications in the control room fully satisfy the need for operator verification of operation of the hydrogen mixing system and the hydrogen recombiner.

(9) Standby Gas Treatment System (SGTS)

Performance of the SGTS following an accident may be verified by observing redundant and independent indications as described in subsection 7.5.1.4.2.7 and fully satisfies the need for operator verification of system operation. Redundancy of instrumentation within individual SGTS trains is not provided. However, redundancy is provided by the redundancy of the individual SGTS trains.

(10) Combustible Gas Control System (CGCS)

Performance of the CGCS subsequent to the manual initiation of the system may be verified by observing the indications as described in Subsection 7.5.1.4.2.8 and fully satisfies the need for operator verification of system operation. Redundancy of instrumentation within the divisional systems is not provided. However, redundancy is provided by the redundant CGCS's.

(11) Containment and Drywell Atmosphere Monitoring System

The various indicators described in Subsection 7.5.1.4.2 provide adequate information concerning containment and drywell hydrogen concentration and gross gamma radiation levels under post accident conditions. This will allow the (reactor) operator to make proper decisions regarding radiation and hydrogen hazards in those spaces. All equipment is required to function following the design basis seismic event.

7.5.2.4.3 Safe Shutdown Display

The safe shutdown display instrumentation in Subsection 7.5.1.4.2.3.1 consists of control rod status lamps, scram pilot valve status lamps, and neutron monitoring instrumentation. These displays are expected to remain operable for a long enough time following an accident to support and verify safe and orderly shutdown.

The displays provide diverse indications by monitoring separate parameters. The rod position and neutron monitoring outputs are recorded (the former by the PMS). The systems cited are automatically connectable to standby ac power.

7.5.2.4.4 Engineered Safety Feature Operation Display

The other operating instruments provide indication of operation of various safety systems but, except for the isolation valve status, do not constitute post-accident surveillance or safe

shutdown display. Isolation valve status meets qualifications, redundancy, power and IEEE 279 requirements for indication. The others meet only qualification, redundancy, and power requirements and do not meet seismic qualification requirements.

7.5.2.5 Specific Regulatory Requirements

7.5.2.5.1 Conformance to IEEE-279

7.5.2.5.1.1 General Functional Requirement (IEEE-279, Paragraph 4.1)

Scram valves position status display verifies completion of RPS scram function. This is further verified by the rods status display. This combination satisfies the requirements for reliability by redundant confirmation of diverse sensors. All components except the front panel display are seismically qualified. Rod position information can also be obtained directly from the rod information panels in the main control room.

The neutron monitoring system is designed to meet all the requirements of IEEE-279 as a part of the reactor protection system. However, its RPS function is a "fail-safe" function while safe shutdown display is not. Further, its RPS function terminates with the generation and maintenance of a shutdown signal. In this regard, post DBA environment conditions may cause malfunction but not until the RPS has had sufficient time to complete its scram function. This makes it impossible to claim continuous indicating capability for safe shutdown display by the neutron monitoring system. Redundancy, power switching capabilities, RPS capabilities, and expected time to failure under DBA environment conditions allow the neutron monitoring system to meet the functional requirements of IEEE-279 as applicable to display instrumentation. The automatic initiation of protective action function is not applicable to the safe shutdown display instrumentation.

7.5.2.5.1.2 Single Failure Criterion (IEEE-279, Paragraph 4.2)

The redundant channels provide indication to meet the single failure criterion. Also, signals feeding the instrumentation are electrically buffered so that failures in the display apparatus cannot be reflected back into essential system functions.

7.5.2.5.1.3 Quality of Indicators (IEEE-279, Paragraph 4.3)

The quality of the indicators will be in accordance with their importance to safety. Instruments providing information necessary for manual safety actions are class 1E.

7.5.2.5.1.4 Equipment Qualification (IEEE-279, Paragraph 4.4)

All safety-related equipment is qualified to assure performance of safety-related functions including post-seismic performance.

7.5.2.5.1.5 Channel Integrity (IEEE-279, Paragraph 4.5)

The failure of any indicator will not adversely affect channel integrity.

7.5.2.5.1.6 Channel Independence (IEEE-279, Paragraph 4.6)

The failure of any indicator will not adversely affect channel independence.

7.5.2.5.1.7 Control and Protection System Interaction (IEEE-279, Paragraph 4.7)

This design requirement is not applicable to the safe shutdown display instrumentation.

7.5.2.5.1.8 Derivation of System Inputs (IEEE-279, Paragraph 4.8)

This is not applicable to display instrumentation.

7.5.2.5.1.9 Capability for Sensor Checks (IEEE-279, Paragraph 4.9)

This is not applicable to safe shutdown display instrumentation.

7.5.2.5.1.10 Capability for Test and Calibration (IEEE-279, Paragraph 4.10)

Calibration checks of the display instrumentation can be made in conjunction with testing of the associated systems.

7.5.2.5.1.11 Channel Bypass (IEEE-279, Paragraph 4.11)

This is not applicable.

7.5.2.5.1.12 Operating Bypasses (IEEE-279, Paragraph 4.12)

This is not applicable.

7.5.2.5.1.13 Indication of Bypass (IEEE-279, Paragraph 4.13)

This is not applicable.

7.5.2.5.1.14 Access to Means for Bypassing (IEEE-279, Paragraph 4.14)

Bypassing is not applicable.

7.5.2.5.1.15 Multiple Setpoints (IEEE-279, Paragraph 4.15)

This design requirement is not applicable to safety-related display instrumentation.

7.5.2.5.1.16 Completion of Protective Action Once It Is Initiated (IEEE-279, Paragraph 4.16)

This is not applicable.

7.5.2.5.1.17 Manual Actuation (IEEE-279, Paragraph 4.17)

Manual actuation is not applicable to display instrumentation.

7.5.2.5.1.18 Access to Setpoints (IEEE-279, Paragraph 4.18)

This design requirement is not applicable to display instrumentation.

7.5.2.5.1.19 Identification of Protective Action (IEEE-279, Paragraph 4.19)

Indicators will indicate protective actions at the channel level.

7.5.2.5.1.20 Information Read Out (IEEE-279, Paragraph 4.20)

Indicators will provide required information.

7.5.2.5.1.21 System Repair (IEEE-279, Paragraph 4.21)

This design requirement is not directly applicable, however the indicators provide diagnostic information and are replaceable.

7.5.2.5.1.22 Identification (IEEE-279, Paragraph 4.22)

Indicators are identified.

7.5.2.5.2 Conformance with IEEE-323

See Section 3.11

7.5.2.5.3 Conformance with IEEE-344

See Section 3.10

7.5.2.5.4 Regulatory Guide 1.22, Periodic Testing of Protection System Actuation Function

Calibration checks may be made of the display instrumentation in conjunction with testing of the associated system.

7.5.2.5.5 Regulatory Guide 1.47, Bypassed and Inoperable Status Indicator for Nuclear Power Plant Safety Systems

Regulatory Guide 1.47 is not applicable to safety related display instrumentation (SRDI) because the SRDI is designed to operate continuously and thereby allows continuous instrument status monitoring. Removal of instrumentation for servicing during plant operation is administratively controlled.

The bypassed and inoperable status indications for the ESF systems are automatically activated and indicated in the main control room should any system or part of a system become inoperable. The bypassed and inoperable status annunciators and indicators are capable of being manually tested from the main control room.

7.5.2.5.6 Regulatory Guide 1.53, Application of the Single Failure Criterion to Nuclear Power Plant Protection Systems

Safety Related Display Instrumentation conforms to the Regulatory Guide as addressed in Paragraph 4.2 of IEEE-279 above.

7.5.2.5.7 Regulatory Guide 1.97

See Subsection 7.1.2.6.23 for degree of conformance.

7.5.2.5.8 Other Regulatory Guides

Conformance to other regulatory guides identified in Table 7.1-3 for safety-related instruments is addressed generically in Section 7.1.2.6.

7.5.2.5.9 Conformance to 10CFR50

A. Appendix A

(1) Criterion 13, Instrumentation and Control

The safety-related display instrumentation is designed to provide reliable information to the operator consistent with this criteria for both normal and accident conditions (see Subsections 7.5.1.2 and 7.5.1.4, respectively).

(2) Criterion 19, Control Room

The safety-related display instrumentation discussed in this section is mounted in the main control room. It is designed to enhance operator awareness of plant functions, contributing to more effective main control room operation. Thus, it is consistent with the intent of this criterion.

(3) Criterion 24, Separation of Protection and Control Systems

Signals feeding the instrumentation are electrically buffered so that failures in the display apparatus cannot be reflected back into essential system functions. Thus, separation between protection and control system is retained.

(4) GDC 41, Containment Atmosphere Cleanup

Containment atmospheric monitoring and control system are provided as addressed in Subsections 7.6.1.10 (CAM) and 7.3.1.1.7 (CGCS), respectively. The instrumentation provided with these systems is consistent with the intent of this criteria.

TABLE 7.5-1
CONTROL ROOM SAFETY-RELATED DISPLAY INSTRUMENTATION

PANEL	SERVICE	PROCESS VARIABLE	INSTRUMENT TYPE	INSTRUMENT NUMBER	DIVISION
System-AP Auxiliary Power					
1H13-P822	Bus 1ET4 FDR TO	4160V Bus 1C1 WATTHR	JI	1JI -AP783	3
1H13-P852	Bus 1ET4 FDR TO	4160V Bus 1B1 WATTHR	JI	1JI -AP775	2
1H13-P862	Bus 1ET4 FDR TO	4160V Bus 1A1 WATTHR	JI	1JI -AP767	1
1H13-P877-14B					
	4160V Bus 1A1		EI	1EI -AP760	1
	480V Bus 1A&A	Voltage	EI	1EI -AP955	1
1H13-P877-15B		Voltage			
	4160V Bus 1B1	Voltage	EI	1EI -AP769	2
	4160V Bus 1B1 FDR	480V Bus B1	II	1II -AP707	2
	TO	Current	II	1II -AP837	2
	4160V Bus 1B1 FDR	480V Bus 1B			
	TO	Current			
System-B21 Nuclear Boiler System					
1H13-P601-17B	RPV Pressure-Level	Press & Level	PR/LR	1B21-R623 B	2
1H13-P601-20B	RPV Pressure-Level	Press & Level	PR/LR	1B21-R623 A	1
1H13-P661	MSIV 1B21-F028A	SOL A AMPS	II	1B21-R661 A	1
	MSIV 1B21-F028B	SOL A AMPS	II	1B21-R661 B	1
	MSIV 1B21-F028C	SOL A AMPS	II	1B21-R661 C	1
	MSIV 1B21-F028D	SOL A AMPS	II	1B21-R661 D	1
	MSIV 1B21-F028A	SOL B AMPS	II	1B21-R662 A	1
	MSIV 1B21-F028B	SOL B AMPS	II	1B21-R662 B	1
	MSIV 1B21-F028C	SOL B AMPS	II	1B21-R662 C	1
	MSIV 1B21-F028D	SOL B AMPS	II	1B21-R662 D	1
1H13-P662	MSIV 1B21-F022A	SOL A AMPS	II	1B21-R659 A	2
	MSIV 1B21-F022B	SOL A AMPS	II	1B21-R659 B	2
	MSIV 1B21-F022C	SOL A AMPS	II	1B21-R659 C	2
	MSIV 1B21-F022D	SOL A AMPS	II	1B21-R659 D	2
	MSIV 1B21-F022A	SOL B AMPS	II	1B21-R660 A	2
	MSIV 1B21-F022B	SOL B AMPS	II	1B21-R660 B	2
	MSIV 1B21-F022C	SOL B AMPS	II	1B21-R660 C	2
	MSIV 1B21-F022D	SOL B AMPS	II	1B21-R660 D	2
System-CM Containment					
1H13-P601-17B	Cont Press & Cont Temp	Press & Temp	PR/TR	1PR-CM256	1
	Cont Press & Cont Temp	Press & Temp	PR/TR	1PR-CM257	2

TABLE 7.5-1 (CONT'D)

PANEL	SERVICE	PROCESS VARIABLE	INSTRUMENT TYPE	INSTRUMENT NUMBER	DIVISION
1H13-P601-18B	Supp Pool Level & Cont Press	Level & Press	LR/PR	1LR-CM031	2
1H13-P601-19B	DW Press & DW Bulk Temp	Press & Temp	PR/TR	1PR-CM063	1
	DW Press & DW Bulk Temp	Press & Temp	PR/TR	1PR-CM064	2
	Supp Pool Level & Supp Pool	Level & Temp	LR/TR	1LR-CM240	1
	Bulk Temp			1LR-CM241	2
	Supp Pool Level & Supp Pool	Level & Temp	LR/TR	1LR-CM030	1
	Bulk Temp			1LI-CM260	1
1H13-P601-20B	Supp Pool Level & Cont Press	Level & Press	LR/PR	1LI-CM261	2
1H13-P601-21B	Supp Pool Water	Level	LI	1TR-CM017	1
	Supp Pool Water	Level	LI	1RIX-CM061	1
1H13-P638	Supp Pool Water	Temp	TR	1RIX-CM059	1
	Log Radiation Monitor	Cont	RIX	1TR-CM018	2
	Log Radiation Monitor	DW	RIX	1RIX-CM062	2
1H13-P639	Supp Pool Water	Temp	TR	1RIX-CM060	2
	Log Radiation Monitor	Cont	RIX	1TR-CM334	1
	Log Radiation Monitor	DW	RIX	1TR-CM335	2
1H13-P678	Supp Pool Water	Temp	TR		
	Supp Pool Water	Temp	TR		
System C-11 CRD Hydraulic System					
1H13-P661	Turb First Stage	Press Swch 1A	PIS	1C11-N654 A	1
	Turb First Stage	Press Swch 1C	PIS	1C11-N654 C	1
1H13-P662	Turb First Stage	Press Swch 1B	PIS	1C11-N654 B	2
	Turb First Stage	Press Swch 1D	PIS	1C11-N654 D	2
System-DC Direct Current					
1H13-P877-14B	MCC 1A	Voltage	EI	1EI-DC001	1
	Battery 1A	AMM	II	1II-DC006	1
1H13-P877-15B	MCC 1B	Voltage	EI	1EI-DC002	2
	MCC 1D	Voltage	EI	1EI-DC003	4
	Battery 1B	AMM	II	1II-DC007	2
	Battery 1D	AMM	II	1II-DC008	4
System-DG Diesel Generator					
1H13-P852	DG 1B Output Current		II	1II-DG811 B	2
	DG 1B Ouptut WATTHR		JI	1JI-DG809	2
1H13-P862	DG 1A Output Current		II	1II-DG805 B	1
	DG 1A Output WATTHR		JI	1JI-DG803	1

TABLE 7.5-1 (CONT'D)

PANEL	SERVICE	PROCESS VARIABLE	INSTRUMENT TYPE	INSTRUMENT NUMBER	DIVISION
1H13-P877-14B	DG 1A Output Voltage		EI	1EI-DG801	1
	DG 1A Output Current		II	1II-DG805 A	1
	DG 1A Output WATTS		JI	1JI-DG802	1
	DG 1A Output VARS		JI	1JI-DG804	1
	DG 1A Output Freq		SI	1SI-DG819	1
1H13-P877-15B	DG 1B Output Voltage		EI	1EI-DG807	2
	DG 1B Output Current		II	1II-DG811 A	2
	DG 1B Output WATTS		JI	1JI-DG808	2
	DG 1B Output VARS		JI	1JI-DG810	2
	DG 1B Output Freq		SI	1SI-DG821	2
System-DO Diesel Oil					
1H13-P877-14B	DG Fuel Oil Storage	TK 1A	LI	1LI-DO011	1
	DG Fuel Oil Storage	TK 1C	LI	1LI-DO013	3
1H13-P877-15B	DG Fuel Oil Storage	TK 1B	LI	1LI-DO012	2
System-D17 Process Radiation Monitoring System					
1H13-P669	Main Steam Line	Rad Monitor	RIY	1D17-K610 A	1
1H13-P670	Main Steam Line	Rad Monitor	RIY	1D17-K610 B	2
1H13-P671	Main Steam Line	Rad Monitor	RIY	1D17-K610 C	3
1H13-P672	Main Steam Line	Rad Monitor	RIY	1D17-K610 D	4
System-E12 RHR					
1H13-P601	RHR Pmp 1A Motor AMM	Amps	II	1E12-R555	1
	RHR Pmp 1B Motor AMM	Amps	II	1E12-R556	2
	RHR Pmp 1C Motor AMM	Amps	II	1E12-R557	2
1H13-P601-17B	RHR Heat Exch B001B	Service Water Flow	FI	1E12-R602 B	2
	RHR Line B Flow	Flow	FI	1E12-R603 B	2
	RHR Line C Flow	Flow	FI	1E12-R603 C	2
	RHR Heat Exch B001B Service Water Inlet	Temp	TI	1E12-R564	2
	RHR Heat Exch B001B Outlet	Temp Service Water Flow	TI FI	1E12-R566 1E12-R602 A	2 1

TABLE 7.5-1 (CONT'D)

PANEL	SERVICE	PROCESS VARIABLE	INSTRUMENT TYPE	INSTRUMENT NUMBER	DIVISION
1H13-P601-20B	RHR Heat Exch B001A	Flow	FI	1E12-R603 A	1
	RHR Line A Flow	Temp	TI	1E12-R563	1
	RHR Heat Exch B001A Service Water Inlet	Temp	TI	1E12-R565	1
	RHR Heat Exch B001A Outlet				
System-E21 LPCS					
1H13-P601-21B	LPCS Pump Discharge	Flow	FI	1E21-R600	1
	LPCS Pump Motor AMM	Amps	II	1E21-N558	1
System-E22 HPCS					
1H13-P601-16B	HPCS Transformer	AMPS	II	1E22-R621	3
	Reserve Source	WATTS	JI	1E22-R625	3
	HPCS Pump Discharge	Pressure	PI	1E22-R601	3
	HPCS Pump Flow	Flow	FI	1E22-R603	3
	HPCS Test Recirc Vlv	POS (1E22-F010)	ZI	1E22-R604	3
	HPCS Test Recirc Vlv	POS (1E22-F011)	ZI	1E22-R606	3
System-E32 MSIV-LCS					
1H13-P655	HTR B001A	MSIV LCS Leakoff Line Temp	TI	1E32-R602 A	1
	HTR B001E	MSIV LCS Leakoff Line Temp	TI	1E32-R602 E	1
	HTR B001J	MSIV LCS Leakoff Line Temp	TI	1E32-R602 J	1
	HTR B001N	MSIV LCS Leakoff Line Temp	TI	1E32-R602 N	1
1H13-P601-19B	MSIV Blower C001	Suct Press	PI	1E32-R500	1
	MSIV Blowers C002 B & F	Suct Press	PI	1E32-R501	1
System-E51 RCIC					
1H13-P601	RCIC Turbine Speed	Speed	SI	1E51-C002-1	1
1H13-P601-21B	RCIC Pump Disch Flow	Sig to Turb Sp Cont	FC	1E51-R600	1
1H13-P601	RCIC Pump Disch Pressure	Press	PI	1E51-R601	1
System-FC Fuel Pool Cooling and Cleanup					
1H13-P800-62B	Fuel Pool Clg Pmp 1A	Motor AMM	II	1II-FC119	1
	Fuel Pool Clg Pmp 1B	Motor AMM	II	1II-FC120	2
System-HG Containment Combustible Gas Control					
1H13-P800-63	Compressor 1HG02CA	Diff Press	PDI	1PDI-HG052 B	1
	Compressor 1HG02CB	Diff Press	PDI	1PDI-HG053 B	2

TABLE 7.5-1 (CONT'D)

PANEL	SERVICE	PROCESS VARIABLE	INSTRUMENT TYPE	INSTRUMENT NUMBER	DIVISION
System-IA Instrument Air					
1H13-P601-19B	ADS Instr Air HDR	Press	PI	1PI-IA078	1
	ADS Backup Bottles	Press	PI	1PI-IA080	1
	ADS Instr Air HDR	Press	PI	1PI-IA079	2
	ADS Backup Bottles	Press	PI	1PI-IA081	2
System-VG Standby Gas Treatment					
1H13-P801-66B	SGTS Train A	Flow through DMPR 01YA	FI	0FI-VG004	1
	CTMT Gas Cont	Boundary N & S	PDI	0PDI-VG001	1
	SGTS Train A Upstream	HEPA Fltr 07FA	PDI	0PDI-VG023	1
	SGTS Train A Downstream	HEPA Fltr 11FA	PDI	0PDI-VG024	1
	SGTS Train A	Inlet Temp	TI	0TI-VG-021	1
	SGTS Train A	Outlet Temp	TI	0TI-VG022	1
1H13-P801-67B	SGTS Train B	Flow through DMPR 01YB	FI	0FI-VG104	2
	CTMT Gas Cont	Boundary E & W	PDI	0PDI-VG101	2
	SGTS Train B Upstream	HEPA Flter 07FB	PDI	0PDI-VG123	2
	SGTS Train B Upstream	HEPA Fltr 11FB	PDI	0PDI-VG124	2
	SGTS Train B	Inlet Temp	TI	0TI-VG121	2
	SGTS Train B	Outlet Temp	TI	0TI-VG122	2
System-SM Suppression Pool Makeup					
1H13-P601	Supp Pool Level, Cont & RPV Press	Level & Press	LR/PR	1LR-SM014	1
1H13-P601	Supp Pool Level, Cont & RPV Press	Level & Press	LR/PR	1LR-SM016	2

TABLE 7.5-2

THIS TABLE HAS BEEN INTENTIONALLY DELETED

7.6 ALL OTHER INSTRUMENTATION SYSTEMS REQUIRED FOR SAFETY

7.6.1 Description

This section will examine and discuss the instrumentation and control aspects of the following plant systems:

(1) Refueling Interlocks System

(2) Process Radiation Monitoring System

(3) High Pressure/Low Pressure Systems Interlock Protection System

(4) Leak Detection System

(5) Neutron Monitoring System (NMS) - (IRM, LPRM, OPRM and APRM)

(6) Rod Pattern Control System (RPCS)

(7) Recirculation Pump Trip System (RPT)

(8) Fuel Pool Cooling System

(9) Containment Atmosphere Monitoring System

(10) Safety Relief Valve Monitoring System

A number of very important, special observations are cited relative to the evaluation of the instrumentation and control portions of the subject systems.

(1) The systems themselves and their I&C portion serve design basis that are both safety and power generation.

(2) Many systems inherently perform mechanical or containment safety functions but need little I&C protective support.

(3) Many systems provide protective functions in selective minor events and are not required for other major plant occurrence.

(4) Several systems perform safety functions with other parallel and complementary systems in a network protective manner and as such the network, not the individual system, is to be evaluated for redundancy, diversity, and separation considerations.

(5) Several systems have only a small portion of their I&C participating in safety functions.

(6) Most of the I&C systems described in this section are an integral part of the total system function described in other sections.

(7) A system/safety function, qualitative-level Nuclear Safety Operational Analysis (NSOA) is presented in Chapter 15 Appendix 15A. The interrelated design basis of the various safety system functions are also analyzed in this Appendix.

7.6.1.1 Refueling Interlocks System - Instrumentation and Controls

7.6.1.1.1 System Identification

The purpose of the refueling interlocks system is to restrict the movement of control rods and the operation of refueling equipment to reinforce operational procedures that prevent the reactor from becoming critical during refueling operations.

This equipment is not required to operate during a seismic event. The operability of the equipment can be verified after a seismic event without jeopardizing safety.

7.6.1.1.2 Power Sources

There is only one source of power for both channels of the logic circuits (see Section 7.6.1.1.3.2). However, this power source supplies the Control Rod Drive System as well. A failure of this power supply will prevent any rod motion.

7.6.1.1.3 Equipment Design

7.6.1.1.3.1 Circuit Description

The refueling interlocks circuitry senses the condition of the refueling equipment and the control rods. Depending on the sensed condition, interlocks are actuated to prevent the movement of the refueling equipment or withdrawal of control rods (rod block) as follows:

(1) All rods inserted (see 7.6.1.1.3.2 below)

(2) Refueling platform positioned near or over the core

(3) Refueling platform fuel grapple hoist fuel-loaded, and

(4) Reactor Mode Switch in REFUEL position.

7.6.1.1.3.2 Logic and Sequencing

The indicated conditions are combined in logic circuits to satisfy all restrictions on refueling equipment operations and control rod movement (drawing E02-1RD99). A two-channel circuit indicates that all rods are in. The rod-in condition for each rod is established by the closure of a magnetically operated reed switch in the rod position indicator probe. The rod-in switch must be closed for each rod before the all-rods-in signal is generated. (This is not the same switch that provides rod numerical position information to the process computer and for rod position display.) Both channels must register the all-rods-in signal in order for the refueling interlock circuitry to indicate the all-rods-in condition.

During refueling operations, no more than one control rod is permitted to be withdrawn except as allowed by Technical Specification 3.10-6; this is enforced by a redundant logic circuit that uses the all-rods-in signal and a rod selection signal to prevent the selection of a second rod for

movement with any other rod not fully inserted. Control rod withdrawal is prevented by comparison checking between the A and B portions of the rod control and information system and subsequent message transmission to the affected control rod. The simultaneous selection of two control rods is prevented by the interconnection arrangement of the select push buttons. With the mode switch in the REFUEL position, the circuitry prevents the withdrawal of more than one control rod and the movement of the loaded refueling platform over the core with any control rod withdrawn.

Operation of refueling equipment is prevented by interrupting the power supply to the equipment. The refueling platform is provided with two mechanical switches attached to the platform, which are tripped open by a long, stationary ramp mounted adjacent to the platform rail. The switches open before the platform or any of its hoists are physically located over the reactor vessel to indicate the approach of the platform toward its position over the core.

Load cell readout is provided for all hoists. Indicators display given hoist loads directly to the operator. For the frame and monorail hoists, load sensing is by hydraulic load cells that use demineralized water as the operating fluid. Associated interlock and load functions are performed by pressure switches that sense the pressure generated by the hydraulic load cells. The main hoist load cell consists of an electronic compression transducer that sends an electronic signal to a signal conditioning unit. Associated load interlock functions are performed by the system's Programmable Logic Controller (PLC).

The load-related interlocks provided by the PLC are used in the software to inhibit raising and lowering the hoist depending upon the condition. The "hoist loaded" interlock is based upon load weight that is lighter than that of a single fuel assembly, to indicate when fuel is loaded on hoist.

7.6.1.1.3.3 Interlocks

The rod block interlocks and refueling platform interlocks provide two independent levels of interlock action. The interlocks which restrict operation of the platform hoist and grapple provide a third level of interlock action since they would be required only after a failure of a rod block and refueling platform interlock. The strict procedural control exercised during refueling operations may be considered a fourth level of backup.

7.6.1.1.3.4 Redundancy and Diversity

Although the refueling interlocks are not designed nor required to meet the IEEE 279 criteria for Nuclear Power Plant Protection Systems, a single interlock failure will not cause an accident. interlocks are provided for use during planned refueling operations. Criticality is prevented during the insertion of fuel, provided control rods in the vicinity of the vacant fuel space are fully inserted during the fuel insertion. The interlock systems accomplish this by:

(1) Preventing operation of the fuel loaded refueling equipment over the core whenever any control rod is withdrawn

(2) Preventing control rod withdrawal whenever fuel loading equipment is over the core.

(3) Preventing withdrawal of more than one control rod when the mode switch is in the refuel position.

The refueling interlocks have been carefully designed utilizing redundancy of sensors and circuitry to provide a high level of reliability and assurance that the stated design bases will be met. Each of the individual refueling interlocks discussed above need not meet the single failure criterion because the four essentially independent levels (including procedural control) of protection provide assurance that the design basis will be met. For any of the "situations" listed in Table 7.6-1 a single interlock failure will not cause an accident or result in potential physical damage to fuel or result in radiation exposure to personnel during fuel handling operations.

7.6.1.1.3.5 Actuated Devices

The refueling interlocks, from the Rod Control and Information System to the refueling equipment, sends a signal to the Programmable Logic Controller (PLC) in the refueling equipment controls which interrupts power to the equipment and prevents it from moving over the core.

The interlocks from the refueling equipment to the Rod Control and Information System actuate circuitry that provides a control rod block. The rod block prevents the operator from withdrawing any control rods.

7.6.1.1.3.6 Separation

The refueling interlocks are not designed to nor required to meet the IEEE 279 criteria for Nuclear Power Plant Protection Systems. However, a single interlock failure will not cause an accident. They are for use during planned refueling operations. Criticality is prevented during the insertion of fuel provided that control rods in the vicinity of the vacant fuel space are fully inserted during the fuel insertion. Separation is provided, to a degree, for two of the three interlocks. The interlock that prevents control rod withdrawal whenever fuel loading equipment is over the core, has two separate channels. These are generated from separate switches located on the bridge end truck and input to two separate Rod Activity Control Systems in the RC&IS. The mode switch is refuel position interlock is two separate channels from two separate banks of the reactor mode switch to the two separate Rod Activity Control Systems.

7.6.1.1.3.7 Testability

Functional testing of all refueling interlocks before any refueling outage will positively indicate that the interlocks operate in the situations for which they were designed. The interlocks can be subjected to valid operational tests by loading each hoist with a dummy fuel assembly, positioning the refueling platform and mode switch, and withdrawing control rods. Where redundancy is provided in the logic circuitry, tests are performed automatically, on a periodic basis, to assure that each redundant logic element can independently perform its function.

7.6.1.1.4 Environmental Considerations

The refueling interlocks are required to operate when subjected to the normal environment conditions listed in Table 3.11-5. The selection of normal environment for qualification is based on the fact that the refueling interlocks are not required at times other than refueling which coincides with normal plant environment.

Refueling components are capable of surviving design basis events such as earthquakes, accidents, and anticipated operational occurrences without consequential damage, but are not required to be functional during or after the event without repair.

7.6.1.1.5 Operational Considerations

7.6.1.1.5.1 General information

The refueling interlocks system is required only during refueling operations.

7.6.1.1.5.2 Reactor Operator Information

In the refueling mode, the main control room operator has an indicator light for "Refueling Mode Select Permissive" whenever all control rods are fully inserted. He can compare this indication with control rod in-out status on the full core status display. Furthermore, whenever a control rod withdrawal block situation occurs, the operator receives annunciation and computer logs of the rod block. Both channels of the control rod withdrawal interlocks must agree that permissive conditions exist in order to move control rods; otherwise, a control rod withdrawal block is placed into effect. Failure of one channel may initiate a rod withdrawal block, and will not prevent application of a valid control rod withdrawal block from the remaining operable channel.

In terms of refueling platform interlocks, the platform operator has digital type readout indicators for the platform x-y position relative to the reactor core. And for grapple position and hoist load these digital readouts are located on the flat screen display in the operator interface cabinet. Analog load cell indications of hoist loads are given for the frame and monorail hoist by locally mounted indicators. Individual push button and rotary control switches are provided for local control of the platform and its hoists. The platform operator can immediately determine whether the platform and hoists are responding to his local instructions, and can, in conjunction with the main control room operator, verify proper operation of each of the three categories of interlocks listed previously.

7.6.1.1.5.3 Set Points

There are no safety set points associated with this system.

7.6.1.2 Process Radiation Monitoring System – Instrumentation and Controls

7.6.1.2.1 Main Steam Line Radiation Monitoring Subsystem

7.6.1.2.1.1 Design Basis

7.6.1.2.1.1.1 Safety Design Basis

The high-high radiation trip will result from the fission products released on gross fuel failure.

The main steam line radiation monitoring subsystem is designed to meet the following design bases:

(1) The subsystem is able to detect a gross release of fission products from the fuel under any anticipated operating combination of main steam lines.

(2) The subsystem shall promptly indicate a gross release of fission products from the fuel.

(3) On detection of a gross release of fission products from the fuel the subsystem shall stop the mechanical vacuum pump or, if not running, prevent the start of the mechanical vacuum pump.

7.6.1.2.1.1.2 Specific Regulatory Requirements

The specific requirements applicable to this subsystem instrumentation and controls conform to the specific regulatory requirements shown in Table 7.1-3.

7.6.1.2.1.1.3 Power Generation Design Basis

The main steam line radiation monitoring subsystem is designed to display in the main control room an indication of gross gamma radiation level in the main steam tunnel.

7.6.1.2.1.2 Subsystem Identification

High radiation in the vicinity of the main steam lines could indicate a gross release of fission products from the fuel. High radiation near the main steam line is annunciated in the main control room. The condenser mechanical vacuum pump cannot be started when there is high main steam line radiation and, if running the pump will trip on either high radiation or inoperative radiation monitor in two channels.

The high radiation trip setting is selected high enough above background radiation levels to avoid spurious isolation, yet low enough to promptly detect a gross release of fission products from the fuel.

The objective of the main steam line radiation monitoring subsystem is to monitor for the gross release of fission products from the fuel and, upon indication of such release, to contain the released fission products and alert the operator to initiate appropriate action to limit fuel damage.

This subsystem classification is provided in Table 3.2-1.

7.6.1.2.1.3 Power Sources

120 VAC NSPS Buses A and D are the power sources for the two main steam line radiation monitors. Each channel is powered from its respective bus. (See Figure 7.2-9).

The mechanical vacuum pump trip relay and annunciation are powered from non-divisional 125 VDC.

7.6.1.2.1.4 Equipment Design

Main steam line radiation is monitored by two radiation monitors. Each monitor will annunciate in the main control room on high radiation to alert the operator of a potential fuel failure. Each monitor provides a trip signal when high-high gamma radiation is detected in the vicinity of the main steam lines or the monitor is inoperative. The trip is one-out-of-two-twice logic. The trip signal triggers an annunciator in the main control room. The same signal trips a permissive to prevent the start of the condenser mechanical vacuum pumps or, if running, the condenser mechanical vacuum pumps will be tripped.

Each radiation monitor is positioned to monitor all four main steam lines.

7.6.1.2.1.5 Initiating Circuits

Two gamma-sensitive instrument channels monitor the gross gamma radiation from the main steam lines. The detectors are physically located near the main steam lines just downstream of the outboard main steam line isolation valves. The detectors are geometrically arranged to detect significant increases in radiation level in any main steam line. Their location along the main steam lines allows the earliest practical detection of a gross fuel failure.

Each monitoring channel consists of a gamma-sensitive ion chamber and a log radiation monitor, as shown in drawing E02-1PR99. Capabilities of the monitoring channel are listed in Table 7.6-2. Each log radiation monitor has two trip circuits, one upscale trip and one operative trip. The two trips from each channel annunciate on a single common alarm in the main control room when both channels are tripped. The same common signal trips the condenser mechanical vacuum pumps or removes the permissive to start those pumps. The output from each log radiation monitor is displayed on a six-decade meter and PMS display.

7.6.1.2.1.6 Logic and Sequencing

When a predetermined increase in the main steam line radiation level is detected, trip signals are transmitted to the condenser mechanical vacuum pumps. If running, the vacuum pumps are tripped to prevent release rates from the common HVAC stack in excess of 10 CFR 100 limits.

Two instrument channels are provided. The high-high trip and inop signals are one-out-of-two to provide a trip from that channel. The two channels are in a two-out-of-two logic arrangement to prevent spurious trips on instrument failure.

7.6.1.2.1.7 Bypasses and Interlocks

No operational bypasses are provided with this subsystem, however, the individual log radiation monitors may be tripped for maintenance or calibration by the use of test switches on each monitor.

7.6.1.2.1.8 Redundancy and Diversity

Two gamma-sensitive ion chambers and log radiation monitors are provided to prevent spurious indication of gamma radiation in the main steam tunnel. Diversity in the trip circuitry is not provided.

7.6.1.2.1.9 Testability

A built-in source of adjustable current is provided to simulate the ion chamber detector input to each log radiation monitor for test purposes. The operability of each monitoring channel can be routinely verified by comparing the outputs of the channels during power operation.

7.6.1.2.1.10 Environmental Considerations

This subsystem is designed and has been qualified to meet the environmental conditions indicated in Section 3.11. In addition, this subsystem has been seismically qualified as described in Section 3.10.

7.6.1.2.1.11 Operational Considerations

In the event of a high radiation alarm in either channel, or two high-high radiation/inop trips, the subsystem will automatically actuate the appropriate alarm annunciator in the main control room. Similarly, the occurrence of a high-high or an inoperable trip within both of the channels will result in the trip of the condenser mechanical vacuum pump(s), if running or prevent the start of either mechanical vacuum pump if not running. Continuous radiation level meter indication is provided in the main control room.

A high level alarm prompts operators to observe other plant conditions due to the possibility of failed fuel. This action ensures that any significant increases in the levels of radioactivity in the main steam lines will be expeditiously controlled to limit both occupational doses and environmental releases.

Cables from each detector to its respective LRM cabinet are individually routed in conduits which are physically separated from each other.

The panels in the main control room are identified by tags which indicate the panel function and identify the contained channels.

The only direct support required is the electrical power system which is provided for the LRMs from 120 VAC NSPS Buses as described in Subsection 7.3.1.1.2.4.1.2.2 and Chapter 8.0, and by non-divisional power for the annunciator and vacuum pump trip circuits.

7.6.1.2.1.12 Setpoints

The high-high radiation trip setpoint is sufficiently above the background radiation level in the vicinity of the main steam lines that spurious trips are unlikely at rated power, yet the setting is low enough to trip on the fission products calculated to be released during the design basis rod drop accident. This high-high trip setpoint is established at a level away from the normal operating range to prevent inadvertent actuation of the systems involved. The mechanical vacuum pump may be operated with one channel inoperative or in a spurious alarm state.

The amount of fuel damage and fission product release involved in the design basis rod drop accident is relatively small. Any other condition would occur only after an accident, in which the primary variables for reactor trip initiation would be reactor vessel low level, reactor vessel high pressure or power. These variables are diverse to main steam high radiation. It is concluded that, for any situation involving gross fission product release, the main steam line radiation monitors provide prompt operator notification and prevent the inadvertent release of radioactivity via the station common stack.

7.6.1.2.2 Containment Fuel Transfer Pool Vent Plenum Radiation Monitoring Subsystem

7.6.1.2.2.1 Subsystem Identification

The purpose of this subsystem is to indicate when excessive amounts of radioactive material exist in the containment fuel transfer pool vent plenum, and to initiate appropriate action so that the release of radioactive material to the environs is controlled. The subsystem consists of four channels of radiation monitors and is a part of the integrated radiation monitor system described in Subsection 7.7.1.19.

7.6.1.2.2.2 Power Sources

Two channels receive power from one safety-related divisional bus, and the other two channels receive power from a second safety-related divisional bus.

7.6.1.2.2.3 Equipment Design

Each of the four channels is identical and consists of a directionally shielded detector and a digital data acquisition module (DDAM).

7.6.1.2.2.3.1 Circuit Description

The detector contains a GM tube, high voltage supply, and pulse conditioning circuitry.

The DDAM provides the following features and capabilities:

(1) Converts the detector's signal to a digital signal.

(2) Converts the digital signal to engineering units (mR/hr).

(3) Local warning lights and audible alarm for high radiation and instrument failure trips.

(4) Local and remote trip reset.

(5) Local digital display, reading out in mR/hr.

(6) Transmission of radiation data, alarm information, and monitor status to the central control terminal.

(7) Initiation of channel checks in order to facilitate maintenance and surveillance checks.

(8) Retention of data for a limited amount of time upon loss of power.

(9) Condensing, averaging, and storage of data.

Each DDAM provides one trip output which is actuated on high radiation level. An annunciator in the main control room is actuated on the trip. A manual, two-position toggle switch (NORMAL/TRIP) is provided for the purpose of simulating a high radiation level and generating a trip output signal in the event of DDAM failure or inoperability.

Each DDAM has one set of status (warning) lights: Normal, Maintenance, Fail, High, Alert, and Trend. They indicate the status of the channel selected for display.

The trend alarm, determined at the 10-minute history file update, is based upon the rate of increase of the reading. The alarm is activated when the rate of increase between the last 10-minute interval and the current 10-minute interval exceeds the value input as the trend alarm setting.

7.6.1.2.2.3.2 Logic and Sequencing

Not applicable to this subsystem.

7.6.1.2.2.3.3 Bypasses and Interlocks

Not applicable to this subsystem.

7.6.1.2.2.3.4 Redundancy and Diversity

Redundancy is achieved by providing two channels for each separation division, one and two.

7.6.1.2.2.3.5 Actuated Devices

The trip outputs of this subsystem initiates isolation of the containment building and fuel building ventilation systems and starts the standby gas treatment system as described in Subsection 7.3.1.

7.6.1.2.2.3.6 Separation

The two divisions (two channels each) are physically and electrically separated from each other to maintain divisional separation. This subsystem is electrically isolated from the non-safety-related portions of the radiation monitoring system.

7.6.1.2.2.3.7 Testability

Each monitor may be tested by initiating a channel source check or by substituting an electronic pulse generator for the detector.

The sequence of the channel source check routine is as follows:

(1) Initiate source check routine functions.

(2) System acquires the "current" reading.

(3) The check source is actuated.

(4) The system prints the check source status.

(5) System acquires the check source data.

The pulse generator may be connected to the processor to verify the correlation between detector counts per minute and display mR/hr.

7.6.1.2.2.4 Environmental Considerations

Each channel is designed to meet the following environmental considerations:

(1) Less than a 10% change in calibration or response per decade reading will occur for temperatures between 65 and 120°F. The channels have also been qualified to the expected duration, frequency, and temperature of periodic SRV actuation.

(2) Less than a 10% change in calibration or response per decade reading will occur for relative humidity between 5 and 100%.

(3) No change in calibration or response for pressure between -1.0 inch of water and 2 psig.

7.6.1.2.2.5 Operational Considerations

7.6.1.2.2.5.1 General Information

Each channel communicates with the central control terminal in the main control room. In addition, a portable control terminal may be connected to the individual DDAM. The portable control terminal provides an operator with the capability to communicate with the DDAM locally for maintenance or surveillance activities. All monitor functions can be initiated from a control terminal and the DDAM provides capabilities for locally acknowledging any alarms or initiating a source check sequence.

Each channel's safety-related functions are designed to operate without the use of any of the non-safety-related portions of the radiation monitoring system.

The operational considerations of the terminal is described in Subsection 7.7.1.9.5.

7.6.1.2.2.5.2 Reactor Operator Information

Reactor operator information is provided by the main control room central control terminal described in Subsection 7.7.1.9.5.

7.6.1.2.2.5.3 Setpoints

Setpoints are calculated and controlled administratively. Calculations are based upon design and/or actual operating values and the guidance provided in Regulatory Guide 1.105.

7.6.1.2.3 Containment Building Exhaust Duct Radiation Monitoring Subsystem

7.6.1.2.3.1 Subsystem Identification

The purpose of this subsystem is to indicate when excessive amounts of radioactive material exist in the containment duct, and to initiate appropriate action so that the release of radioactive material to the environs is controlled. The subsystem consists of four gamma sensitive radiation monitors and is part of the integrated radiation monitoring system described in Subsection 7.7.1.19.

7.6.1.2.3.2 Power Sources

Two channels receive power from one safety-related divisional bus, and the other two channels receive power from a second safety-related divisional bus.

7.6.1.2.3.3 Equipment Design

The equipment design of this subsystem is as described in Subsection 7.6.1.2.2.3.

7.6.1.2.3.4 Environmental Considerations

The environmental considerations of this subsystem are as described in Subsection 7.6.1.2.2.4.

7.6.1.2.3.5 Operational Considerations

The operational considerations of this subsystem are as described in Subsection 7.6.1.2.2.5.

7.6.1.2.4 Fuel Building Ventilation Exhaust Radiation Monitoring Subsystem

7.6.1.2.4.1 Subsystem Identification

The purpose of this subsystem is to indicate when excessive amounts of radioactive material exist in the fuel building duct, and to initiate appropriate action so that the release of radioactive material to the environs is controlled. The subsystem consists of four channels of radiation monitors and is part of the integrated radiation monitor system described in Subsection 7.7.1.19.

7.6.1.2.4.2 Power Sources

Two channels receive power from one safety-related divisional bus, and the other two channels receive power from a second safety-related divisional bus.

7.6.1.2.4.3 Equipment Design

The equipment design of this subsystem is as described in Subsection 7.6.1.2.2.3 with the exception that the actuated devices do not include containment isolation valves.

7.6.1.2.4.4 Environmental Considerations

The environmental considerations of this subsystem are as described in Subsection 7.6.1.2.2.4.

7.6.1.2.4.5 Operational Considerations

The operational considerations of this subsystem are as described in Subsection 7.6.1.2.2.5.

7.6.1.2.5 Control Room Air Intakes Radiation Monitoring Subsystem

The purpose of this subsystem is to indicate when excessive amounts of radioactive material exist in the control room minimum air intake ducts and to initiate appropriate action to minimize the dose to the control room inhabitants. The subsystem consists of four channels of radiation monitors and is part of the integrated radiation monitor system described in Subsection 7.7.1.19.

7.6.1.2.5.1 Power Sources

The two channels receive power from one safety-related divisional bus, and the other two channels receive power from the other safety-related divisional bus.

7.6.1.2.5.2 Equipment Design

The equipment design of this subsystem is the same as described in Subsection 7.6.1.2.2.3 except the detectors are not directionally shielded and the following differences exist regarding circuit and actuated devices, respectively.

1. A manual NORMAL/TRIP switch is not provided in this circuitry. Instead, each DDAM provides one trip output which is actuated on failure (power or count rate) or on high radiation level. An annunciator in the main control room is actuated on the trip.

2. The trip output will start the applicable makeup air filter train and isolate the air intake as described in Subsection 7.3.1.

7.6.1.2.5.3 Environmental Considerations

The environmental considerations of this subsystem are as described in Subsection 7.6.1.2.2.4.

7.6.1.2.5.4 Operational Considerations

The operational considerations of this subsystem are as described in Subsection 7.6.1.2.2.5.

7.6.1.2.6 Standby Gas Treatment System (SGTS) Exhaust High Range Radiation Monitoring System - Instrumentation and Controls

7.6.1.2.6.1 System Identification

In this subsection, the instrumentation and controls associated with the safety-related SGTS exhaust high range radiation monitoring system are discussed. (This system was procured and designed as a safety-related system in order to provide a monitor which meets and/or exceeds Category 2 requirements of Regulatory Guide 1.97. This system, however, is not redundant and is not designed to mitigate the consequences of an accident.) This system provides the capability for continuous accident range noble gas monitoring and sampling of SGTS effluent for postaccident releases of radioactive iodines and particulates. The SGTS exhaust high range radiation monitoring system is comprised of the following subassemblies:

a. SGTS Exhaust Isokinetic Sample Probe (OAE-PR009). This probe is located in the 18-inch diameter common SGTS exhaust line at approximate elevation 779 feet, and samples the discharge of the standby gas treatment systems (Division 1 and/or 2). The probe is designed for a SGTS design basis exhaust flow rate of 4000 cfm. A sample flow control device is not needed, since the SGTS exhaust flow rate is controlled automatically by a damper.

b. Grab Sample Pallet (GSP-1; OPR05S). This assembly is located in the diesel generator building at elevation 762 feet, approximately 20 feet from the SGTS exhaust line, and receives the sample from the isokinetic probe. The functions of this assembly are to:

    1. Collect postaccident particulate and iodine samples at approximately the rate of 1/60 of the normal sample flow rate;

    2. Allow safe removal of the collected particulate and iodine samples for transport to the laboratory for analysis; and

    3. Purge the system of radioactive gases. Instrument air is drawn through the system via a valving arrangement on the grab sample pallet and the sample pump and is discharged to the SGTS exhaust line.

c. Bulk Filter Assembly (BFA-1; OPR06S). The bulk filter assembly is located in the diesel generator building at elevation 763 feet 3 1/8 inches approximately 6 feet from the grab sample pallet. The function of this filter is to remove radioactive particulates and iodines from the sample, so the sample is entirely gaseous in composition before it enters the noble gas pallet described below. The bulk filter assembly is housed in a lead enclosure to limit personnel exposures from the deposited radioactive particulates and iodines.

d. Sample Cooler (OPR13A). The sample cooler is located in the diesel generator building at elevation 763 feet 3 1/4 inches near the bulk filter assembly.

   Sample effluent from the bulk filter assembly passes through the cooler prior to entering the noble gas pallet. Its function is to reduce the sample temperature from 180°F to approximately 120°F.

   Shutdown service water is the cooling water source for this sample cooler and flows constantly through the cooler in both normal and postaccident conditions.

e. Noble Gas Pallet (NGP-1; OPR07S). This assembly is located in the diesel generator building at elevation 762 feet, approximately 20 feet from the SGTS exhaust line, and accepts the sample from the cooler discharge. The functions of this assembly are to:

   1. Move the sample through the system via the sample pump;

   2. Monitor the noble gas concentrations of the sample; and

   3. Determine when a low sample flow condition exists and provide a corresponding alarm.

   After it leaves the noble gas pallet, the sample is returned to the SGTS exhaust line downstream of the isokinetic probe.

f. Data Acquisition Module (DAM-4; OPR08S). This assembly is located in the diesel generator building above floor elevation 762 feet, approximately 25 feet from the sampling assemblies described above. The radiation detectors on the grab sample pallet and noble gas pallet, through their interfacing electronics are connected to the microprocessor in the data acquisition module. The module allows for communication between the field units and the radiation monitoring control terminal in the main control room via a twisted pair transmission line.

g. Communication Line Isolator (CLI-1; OUT-PR008A and B). Communication line isolators are located in the diesel generator building above floor elevation 762 feet, directly above the data acquisition module. Their function is to provide a d-c isolated interface between the safety-related data acquisition module and the non-safety related transmission line and radiation monitoring control terminal.

The SGTS exhaust high range radiation monitoring system is a part of the integrated radiation monitor system described in Subsection 7.7.1.19.

7.6.1.2.6.2 Power Sources

The Class 1E electrical system supplies 120 Vac power to the SGTS exhaust high range radiation monitoring system. The data acquisition module is powered from a Division 1 120/208 Vac distribution panel located in a control building motor control center. This same power source is distributed to both the grab sample and noble gas pallets via interconnecting wiring to the data acquisition module.

7.6.1.2.6.3 Equipment Design

7.6.1.2.6.3.1 Sample Flow Path Description

The sample collected by the probe in the SGTS exhaust line passes into the GSP-1 through an isolation valve. The length of sample line between the probe and grab sample pallet is minimized to maintain an acceptable system response time.

A small portion is extracted by an isokinetic nozzle located on the GSP-1 and placed in the flow path. This sample passes through an isolation valve and into the sample assembly, which contains the particulate and iodine filters surrounded by 2 inches of lead. The sample then passes through a flow-meter and an isolation valve and then is recombined with the main sample flow.

After exiting the grab sample pallet, the sample flows through the bulk filter assembly. The filter removes radioactive particulates and iodines from the sample.

Once leaving the bulk filter assembly, the sample is drawn through the tube side of the sample cooler and then through the noble gas pallet by the diaphragm pump. The pump exhausts the sample through a flowmeter and into the noble gas sampler assemblies. On leaving the sampler assemblies, the sample is then exhausted back into the SGTS exhaust line above the sample extraction point.

Two condensate traps are provided in the SGTS sample line. One is between the bulk filter assembly and the sample cooler, the other between the sample cooler and the noble gas pallet. Each trap can be manually drained by removing a cap and opening a pair of shut off valves.

The sample lines between the probe and grab sample pallet isokinetic nozzle and between the grab sample pallet outlet and the bulk filter assembly are heat traced (the sample lines are maintained at 180°F during both normal and postaccident conditions) to prevent sample condensation. An 8 to 10-inch section of sample tubing between the particulate/iodine sample assembly and the GSP-1 isokinetic nozzle and the sample assembly itself are not heat traced. Physical design constraints and the requirement to allow the removal and replacement of the sample assembly prevent extending the heat tracing to include these items. In addition certain sections of the tubing on the GSP-1 are insulated (only) to prevent the formation of moisture and possible plugging of the grab sample pallet isokinetic nozzle. Refer to Subsections 7.6.1.10.11.1(j) and 7.6.1.10.11.2(b) for a description of the heat tracing temperature controllers and alarms associated with this system.

7.6.1.2.6.3.2 Circuit Description

The circuit description of the applicable SGTS exhaust high range radiation monitoring system subassemblies are described below:

1. Grab Sample Pallet

The grab sample pallet particulate/iodine sample assembly is furnished with an energy compensated G-M detector which can be utilized to indicate the relative amount of radioactivity deposited on the filter. The G-M tube is interfaced with the data handling system through a device which generates the high voltage to operate the detector and provides low voltage regulation to operate the pulse amplifier and the transmission line driver. This G-M tube assembly is not furnished with a check source mechanism.

2. Noble Gas Pallet

The noble gas pallet is furnished with two noble gas sampler assemblies. The intermediate level detector assembly has a chamber volume of 2.7 liters and an energy compensated G-M tube at its center. The sample chamber is surrounded by 5 inches of lead shielding. The high range detector utilizes a section of 1-inch outside diameter tubing which is viewed by an energy compensated G-M tube to make its measurement. This sampler also employs 5 inches of lead shielding. Another G-M tube is placed in the high range lead shield and reacts to background radiation in a similar manner to the sample detectors. Its reading can be subtracted from that of the sample detectors, thus minimizing the effects of fluctuating background.

These G-M tubes are interfaced with the data handling system through a device which generates the high voltage to operate the detectors and provides low voltage regulation to operate the pulse amplifiers and the transmission line drivers.

Check source assemblies are provided to permit evaluation of the intermediate and high range noble gas channel operation.

3. Data Acquisition Module

The G-M tubes and interface boxes (high voltage supply and pulse amplifier) described above are input to the detector input-output boards of the microcomputer located in the data acquisition module. These signals are converted to count rate by the microcomputer, which then performs all mathematical calculations and control functions.

Four active channels are recognized by the data acquisition module as follows:

Channel 1 Particulate and Iodine Filter Gamma Activity

Channel 2 Noble Gas Channel Background Subtraction

Channel 3 High Range Noble Gas

Channel 4 Intermediate Range Noble Gas

The data acquisition module provides the following features and capabilities:

a. Converts the detector's signal to a digital signal;

b. Converts the digital signal to engineering units;

c. Local visual warning lights for high radiation alarm (red beacon) and fail condition (blue beacon);

d. Local controls for the following functions:

Sample pump on/off,

Initiate check source,

Alarm acknowledge, and

Initiate purge;

e. Local digital display with values reading out in CPM or engineering units (value in engineering units obtained by proper selection of calibration constant). Six light-emitting diode lamps on the digital display that indicate the status of the channel being displayed as follows:

Normal Operation	(green)
Maintenance	(clear red)
Fail	(yellow)
Trend Alarm	(yellow)
Alert Alarm	(yellow)
High Alarm	(red)

In normal operation only one of the status lamps will be lit at any time;

f. Transmission of radiation data, alarm information, and monitor status to the main control room central control terminal;

g. Retention of data upon loss of Class 1E 120 Vac power. A battery back-up system furnished with the data acquisition module has the capacity to supply the microprocessor system loads for 8 hours. The purpose of the battery system is to retain data collected in the microcomputer memory upon loss of normal a-c power. The battery system does not have the capacity to operate the sample pump or the rotating beacons and local audible alarm;

h. Condensing, averaging, and storage of data.

4. Communication Line Isolator (CLI)

The isolator provides a d-c-isolated interface between the safety-related data acquisition module and the non-safety-related transmission line and radiation monitoring control terminal. Isolators are provided to interface with the transmission line.

In the transmit mode, the CLI optical isolator is driven by the data acquisition module and the switched output of the optical isolator in turn drives the twisted pair transmission line. In the receive mode, high power pulses are received by the current regulator in the CLI from the twisted pair transmission line. The output of the current regulator in turn drives the data acquisition module.

7.6.1.2.6.3.3 Logic and Sequencing

The SGTS exhaust high range radiation monitoring system data acquisition system microprocessor provides the logic to initiate the various functions of the system.

7.6.1.2.6.3.4 Bypasses and interlocks

The transfer from standby mode interlock is provided for the SGTS exhaust high range radiation monitoring system. The data acquisition module is provided with remote startup capabilities. During normal plant operations, the SGTS exhaust high range radiation monitoring system will be placed in the standby mode. This mode of operation allows the system to be powered up and ready for operation while maintaining the sample pump in the non-operating condition (samples will not be drawn through the system in the standby mode). The system which is in a standby mode can be caused to start up (activate sample pump) by closure of a contact external to the data acquisition module. Once in the operating mode, the system will continue to operate in this fashion until it is placed back in the standby mode through the main control room central control terminal.

The SGTS exhaust high range radiation monitoring system is transferred from the standby mode to the operating mode by the same signal that initiates automatic startup of the Division 1 standby gas treatment system. Testing of the Division 1 standby gas treatment system will not cause the standby transfer to occur.

The operator has the ability through the main control room central control terminal to transfer the SGTS exhaust high range radiation monitoring system from standby to normal operation or vice versa. Once the system is placed in the normal operating mode (either by external contact or operator action) the monitor will continue to run until the operator terminates it.

7.6.1.2.6.3.5 Redundancy and Diversity

Not applicable to this subsystem.

7.6.1.2.6.3.6 Actuated Devices

Actuation of devices external to this subsystem is not applicable.

7.6.1.2.6.3.7 Separation

The SGTS exhaust high range radiation monitor subsystem is electrically assigned to the Division 1 segregation code. This subsystem is electrically isolated from the non safety-related radiation monitoring system transmission line by the communication line isolator.

7.6.1.2.6.3.8 Testability

The testability of this subsystem is as described in Subsection 7.6.1.2.2.3.7.

7.6.1.2.6.3.9 Environmental Considerations

All components of the SGTS exhaust high range radiation monitoring system are designed to be operable during normal and post environments. The system is environmentally qualified in accordance with IEEE-323, and seismically qualified in accordance with IEEE-344.

7.6.1.2.6.4 Operational Considerations

7.6.1.2.6.4.1 General Information

Each channel communicates with the radiation monitoring system central control terminal in the main control room. In addition, the data acquisition module is equipped with a portable terminal interface which permits communication between the system and a portable terminal. This interface isolates the system from the transmission line while the portable terminal is connected.

All operator actions require the use of a control terminal. Local controls, however, are provided on the data acquisition module to allow alarm acknowledgment, to initiate check source and purge, and to allow control of the sample pump.

Each channel's safety-related functions are designed to operate without the use of any of the non-safety-related portions of the radiation monitoring system.

The operational considerations of the terminal are described in Subsection 7.7.1.9.5

7.6.1.2.6.4.2 Reactor Operator Information

Reactor operator information is provided by the main control room central control terminal described in Subsection 7.7.1.9.5.

7.6.1.2.6.4.3 Setpoints

There are no setpoints associated with this monitor.

7.6.1.2.7 Common Station HVAC Exhaust High Range Radiation Monitoring System - Instrumentation and Controls

7.6.1.2.7.1 System Identification

In this subsection, the instrumentation and controls associated with the safety-related HVAC exhaust high range radiation monitoring system are discussed. (This system was procured and designed as a safety-related system in order to provide a monitor which meets and/or exceeds

Category 2 requirements of Regulatory Guide 1.97. This system, however, is not redundant and is not designed to mitigate the consequences of an accident.)

This system provides the capability for continuous accident range noble gas monitoring and sampling of HVAC stack effluent for postaccident releases of radioactive iodines and particulates. The HVAC exhaust high range radiation monitoring system is comprised of the following subassemblies which are identical in design to those described in subsection 7.6.1.2.6.1.:

a. HVAC Exhaust Isokinetic Sample Probe (0AE-PR013). This probe is located in the common station HVAC vent stack at approximate elevation 896 feet and samples the HVAC discharge downstream of all ventilation inputs to the stack. This probe consists of an array of samplers configured to take a representative sample of the rectangular duct. The probe is designed for a design-basis postaccident exhaust air flow rate of 180,000 cfm. This flow rate takes into account expected reductions from normal stack flow rate for a design basis accident, which occur because of the isolation of primary and secondary containments. Variation in this flow rate is not expected, and hence a sample flow control device is not provided.

b. Grab Sample Pallet (GSP-1; 0PR09S). This assembly is located in the diesel generator building at elevation 762 feet, approximately 15 feet from the HVAC vent stack, and receives the sample from the isokinetic probe. The equipment design of this subsystem is as described in Subsection 7.6.1.2.6.1(b).

c. Bulk Filter Assembly (BFA-1; 0PR10S). The bulk filter assembly is located in the diesel generator building at elevation 763 feet 3 1/8 inches, approximately 4 feet from the grab sample pallet. The equipment design of this subsystem is as described in Subsection 7.6.1.2.6.1(c).

d. A sample cooler is not required nor furnished for this system.

e. Noble Gas Pallet (NGP-1; OPRIIS). This assembly is located in the diesel generator building at elevation 762 feet, approximately 10 feet from the HVAC vent stack, and accepts the sample from the bulk filter assembly. The sample is returned to the HVAC vent stack at approximate elevation 775 feet which is upstream of the isokinetic probe (the volume of sample returned is low in proportion to the volume of effluent discharged from the vent stack). The equipment designed of this subsystem is as described in Subsection 7.6.1.2.6.1(e).

f. Data Acquisition Module (DAM-4; 0PR12S). This assembly is located in the diesel generator building above floor elevation 762 feet, approximately 25 feet from the sampling subassemblies described above. The equipment design of this subsystem is as described in Subsection 7.6.1.2.6.1(f).

g. Communication Line Isolator (CLI-1; OUT-PR012A and B). Redundant communication line isolators are located in the diesel generator building above floor elevation 762 feet, directly above the data acquisition module. The equipment design of this subsystem is as described in Subsection 7.6.1.2.6.1(g).

The HVAC exhaust high range radiation monitoring system is a part of the integrated radiation monitoring system described in Subsection 7.7.1.19.

7.6.1.2.7.2 Power Sources

The Class 1E electrical system supplies 120 Vac power to the HVAC exhaust high range radiation monitoring system. The data acquisition module is powered from a Division 1 120/208 Vac distribution panel located in a control building motor control center. This same power source is distributed to both the grab sample and noble gas pallets via interconnecting wiring to the data acquisition module.

7.6.1.2.7.3 Equipment Design

7.6.1.2.7.3.1 Sample Flow Path Description

The system flow path is similar to that described for the SGTS exhaust high range radiation monitoring system (Subsection 7.6.1.2.6.3.1) except that the sample is collected by the probe in the common station HVAC vent stack and a sample cooler is not required to cool the sample prior to it entering the noble gas pallet.

One condensate trap is provided. It is located between the bulk filter assembly and the noble gas pallet. The trap can be manually drained by removing a cap and opening a pair of shut off valves.

The sample lines between the probe and grab sample pallet isokinetic nozzle (only the portion between the point where the sample line exits the interior of the HVAC vent stack and the grab sample pallet isokinetic nozzle) and between the grab sample pallet and the bulk filter assembly are heat traced to prevent sample condensation. An 8- to 10-inch section of sample tubing between the particulate/iodine sample assembly and the GSP-1 isokinetic nozzle and the sample assembly itself are not heat traced. Physical design constraints and the requirement to allow the removal and replacement of the sample assembly prevent extending the heat tracing to include these items. In addition, certain sections of the tubing on the GSP-1 are insulated (only) to prevent the formation of moisture and possible plugging of the grab sample pallet isokinetic nozzle. The sample lines are maintained at 130°F during both normal and postaccident conditions. Refer to Subsections 7.6.1.10.11.1(j) and 7.6.1.10.11.2 (b) for a description of the heat tracing temperature controllers and alarms associated with the system.

7.6.1.2.7.3.2 Circuit Description

The circuit description of the applicable HVAC exhaust high range radiation monitoring system assemblies is identical to that described in Subsection 7.6.1.2.6.3.2 for the SGTS exhaust high range radiation monitoring system.

7.6.1.2.7.3.3 Logic and Sequencing

The HVAC exhaust high range radiation monitoring system data acquisition system microprocessor provides the logic to initiate the various functions of the system.

7.6.1.2.7.3.4 Bypasses and Interlocks

The following interlocks are provided for the HVAC exhaust high range radiation monitoring system:

1. Transfer from standby mode. The data acquisition module is provided with remote startup capabilities. During normal plant operations, the HVAC exhaust high range radiation monitoring system will be placed in the standby mode. This mode of operation allows the system to be powered up and ready for operation while maintaining the sample pump in the non-operating condition (samples will not be drawn through the system in the standby mode). The system which is in a standby mode can be caused to start up (activate sample pump) by closure of a contact external to the data acquisition module. Once in the operating mode, the system will continue to operate in this fashion until it is placed back in the standby mode through the main control room central control terminal.

   The HVAC exhaust high range radiation monitoring system is transferred from the standby mode to the operating mode by either of the two non-safety related normal range HVAC exhaust radiation monitoring systems (0PR01S and 0PR02S). An alarm relay provided at each of the normal range monitors will deenergize, closing a contact (which transfers the HVAC exhaust high range radiation monitoring system from standby to normal operation) under the following conditions occurring at the normal range monitor:

   a. External failure (loss of sample flow)

   b. Low count rate failure

   c. High count rate failure

   d. High radiation alarm

   e. Loss of a-c power. (Although a battery back-up system is provided with the normal range monitor data acquisition module, loss of a-c power will stop the sample pump. The battery system is provided only to retain collected data in the microcomputer memory upon loss of normal a-c power. This sequence will de-energize the alarm relay due to loss of sample flow).

      The circuit is tested by using a check source. When a check source is commanded, a high alarm is artificially produced. This causes the alarm relay to de-energize. As soon as the relay de-energizes, the high alarm is cleared and the relay is energized. This occurs in a very short time frame so that the alarm indicators do not come on.

      The operator has the ability through the main control room central control terminal to transfer the HVAC exhaust high range radiation monitoring system from standby to normal operation or vice versa. Once the system is placed in the normal operating mode (either by external contact or operator action) the monitor will continue to run until the operator terminates it.

7.6.1.2.7.3.5 Redundancy and Diversity

Not applicable to this subsystem.

7.6.1.2.7.3.6 Actuated Devices

Actuation of devices external to this subsystem is not applicable.

7.6.1.2.7.3.7 Separation

The HVAC exhaust high range radiation monitor subsystem is electrically assigned to the Division 1 segregation code. This subsystem is electrically isolated from the non-safety-related radiation monitoring system transmission line by the communication line isolator.

7.6.1.2.7.3.8 Testability

The testability of this subsystem is as described in Subsection 7.6.1.2.2.3.7.

7.6.1.2.7.3.9 Environmental Considerations

All components of the HVAC exhaust high range radiation monitoring system are designed to be operable during normal and post accident environments. The system is environmentally qualified in accordance with IEEE-323, and seismically qualified in accordance with IEEE-344.

7.6.1.2.7.4 Operational Considerations

The operational considerations of this subsystem are as described in Subsection 7.6.1.2.6.4.

7.6.1.2.8 Continuous Containment Purge Exhaust Duct Radiation Monitoring Subsystem

7.6.1.2.8.1 Subsystem Identification

The purpose of this subsystem is to indicate when excessive amounts of radioactive material exist in the exhaust duct, and to initiate appropriate action so that the release of radioactive material to the environs is controlled. The subsystem consists of our channels of radiation monitors and is part of the integrated radiation monitoring system described in Subsection 7.7.1.19.

7.6.1.2.8.2 Power Sources

Two channels receive power from one safety-related divisional bus, and the other two channels receive power from a second safety-related divisional bus.

7.6.1.2.8.3 Equipment Design

The equipment design of this subsystem is as described in Subsection 7.6.1.2.2.3.

7.6.1.2.8.4 Environmental Considerations

The environmental considerations of this subsystem are as described in Subsection 7.6.1.2.2.4.

7.6.1.2.8.5 Operational Considerations

The operational considerations of this subsystem are as described in Subsection 7.6.1.2.2.5.

7.6.1.3 High Pressure/Low Pressure Systems Interlock Protection System

7.6.1.3.1 Function Identification

The low pressure systems which interface with the reactor coolant pressure boundary and the instrumentation which protects them from overpressurization are discussed in this section.

7.6.1.3.2 Power Sources

The power for the interlocks is provided from the essential power supplies for the associated systems, (RHR for the RHR valves and LPCS for the LPCS valves).

7.6.1.3.3 Equipment Design

The following high pressure/low pressure interlock equipment is provided:

Interlocked Process Line	Type	Valve	Parameter Sensed	Purpose
RHR Shutdown Cooling Suction	MO	E12-F009 E12-F008	Reactor pressure	Prevents valve opening until reactor pressure is low
RHR Shutdown Cooling Return	Check MO	E12-F050A/B E12-F053A/B	N/A Reactor Pressure	N/A Prevents valve opening until reactor pressure is low
RHR Head Spray	Check MO	E51-F066 E12-F023	N/A Reactor Pressure	N/A Prevents valve opening until reactor pressure is low
LPCS System Spray Injection	Check MO	E21-F006 E21-F005	N/A Reactor Pressure	N/A Prevents valve opening until reactor pressure is low
RHR	Check	E12-F041A/B/C	N/A	N/A
LPCI	MO	E12-F042A/B/C	Reactor pressure	Prevents valve opening until pressure is low
RHR Feedwater Leakage Control (FWLC) Mode	Check Check MO Check Check MO	E12-F495A E12-F495B E12-F496 E12-F499A E12-F499B E12-F497	Feedwater Line Pressure	Prevent valve opening until feedwater pressure is below a preset limit to protect the RHR piping components.

7.6.1.3.3.1 Circuit Description

At least two valves are provided in series in each of these lines.

The shutdown cooling suction valves E12-F008 and E12-F009 have independent interlocks to prevent the valves from being opened when the primary system pressure is above the subsystem design pressure, and receive a close command when primary system pressure exceeds the subsystem design pressure.

The RHR system head spray motor operated valve E12-F023 is interlocked to prevent valve opening whenever the primary pressure is above the subsystem design pressure, and automatically closes whenever the primary system pressure exceeds the subsystem design pressure.

The RHR shutdown cooling return valves E12-F053A, B are interlocked to prevent valve opening whenever the primary pressure is above the subsystem design pressure, and automatically close whenever the primary system pressure exceeds the subsystem design pressure. This valve must operate for long-term cooling, and has check valves E12-F050A, B downstream. Relief valves E12-F025A, B will handle the leakage of the closed check valve.

The RHR LPCI system vessel injection valves E12-F042A, B and C must operate for short-term cooling. This valve opens upon receipt of an accident signal and low pressure permissive. This valve is the fastest opening valve available and it has a remote testable check valve down stream.

The LPCS system injection valve E21-F005 must operate for core flooding/spray. This valve opens upon receipt of an accident signal and low pressure permissive. This valve is the fastest opening valve available and it has a testable check valve downstream.

The feedwater leakage control valves are operated to control long term post-accident leakage through the feedwater lines. These valves may be opened when feedwater pressure is low, and they have check valves downstream.

The RHR Feedwater Leakage Control Mode (FWLC) valves are manually operated from the main control room. Manual operation of these valves will divert RHR flow to the feedwater lines to provide a water seal at the outboard feedwater isolation check valves (1B21-F032A/B) and gate valves (1B21-F065A/B) after a DBA LOCA to prevent the release of containment atmosphere through the feedwater piping release path. Pressure switches provide a permissive to prevent valve opening (or to close the valves) when the feedwater line pressure is above the maximum operating pressure of the RHR system.

7.6.1.3.3.2 Logic and Sequencing

Refer to system elementary diagram.

7.6.1.3.3.3 Bypasses and Interlocks

There are no bypasses or interlocks in the high pressure/low pressure interlocks.

7.6.1.3.3.4 Redundancy and Diversity

Each process line has two valves in series which are redundant in assuring the interlock. The recirculation suction valves have independent interlocks to prevent the valves from being opened when the primary system pressure is above the subsystem design pressure.

7.6.1.3.3.5 Actuated Devices

The motor operated valves and air operated valve listed in Subsection 7.6.1.3.3 are the actuated devices.

7.6.1.3.3.6 Separation

Separation is maintained in the instrumentation portion of the high pressure/low pressure interlocks by assigning the signals for the electrically controlled valves to ESF separation divisions. The sensors and cabling are in separate ESF division.

7.6.1.3.3.7 Testability

The actuated devices can (except those valves kept closed by reactor pressure interlocks and the RHR FWLC mode valves) be tested during reactor operation. The sensors (except the RHR FWLC mode pressure switches) can be tested during reactor operation in the same manner that the ECCS sensors are tested. Refer to subsections of 7.3.1.1.1 for a discussion of various ECCS systems testing.

7.6.1.3.4 Environmental Considerations

The instrumentation and controls for the high pressure/low pressure interlocks are qualified as Class 1E equipment. The sensors are mounted on local instrument panels and the control circuitry is housed in control panels in the main control room.

7.6.1.3.5 Operational Considerations

7.6.1.3.5.1 General Information

The high pressure/low pressure interlocks are strictly automatic. There is no manual actuation capability. If the operator initiates a low pressure system, the interlocks will prevent exposure to the high pressure.

7.6.1.3.5.2 Reactor Operator Information

The status of each valve providing the high pressure/low pressure boundary is indicated in the main control room. The state of the sensors is also indicated in the main control room except for the FWLC mode pressure switches which have local indication only.

7.6.1.3.5.3 Setpoints

Set points are discussed in the Operational Requirements Manual (ORM). The RHR FWLC mode pressure switch setpoints are provided in the instrument setpoint log.

7.6.1.4 Leak Detection System - Instrumentation and Controls

The safety-related portion of the Leak Detection System consists of the following subsystems:

(1) Main Steam Line Leak Detection

(2) RCIC System Leak Detection

(3) RHR System Leak Detection

(4) Reactor Water Cleanup System Leak Detection

7.6.1.4.1 System Identification

This section discusses the instrumentation and controls associated with the leak detection system. The system itself is discussed in Section 5.2.5. Associated automatic valve isolating logic is defined to be part of the Containment and Reactor Vessel Isolation Control System (CRVICS) (Subsection 7.3.1.1.2) and RCIC Instrumentation and Control System (Subsection 7.4.1.1) and is described in those sections. The non-safety-related portions of the Leak Detection System are discussed in Subsection 7.7.1.24.

The purpose of the leak detection system instrumentation and controls is to monitor leakage from the reactor coolant pressure boundary and initiate alarms and/or an isolation function before predetermined limits are exceeded.

Safety, seismic and environmental classifications for the Leak Detection System are discussed in Sections 3.2, 3.10 and 3.11.

7.6.1.4.2 Power Sources

Separation requirements are applicable to leak detection signals that are associated with the CRVICS function. Two or four power sources are used to comply with separation criteria. All equipment associated with Division 1 is powered by 120 Vac NSPS Bus A. Divsion 2 equipment is powered by 120 Vac NSPS Bus B. Division 3 equipment is powered by 120 Vac NSPS Bus C. Division 4 equipment is powered by 120Vac NSPS Bus D. Power sources for the Containment and Reactor Vessel Isolation Control System (CRVICS) are described in Subsection 7.3.1.1.2.

7.6.1.4.3 Equipment Design

7.6.1.4.3.1 General

The systems or parts of systems which contain water or steam coming from the reactor vessel or supply water to the reactor vessel, and which are in direct communication with the reactor vessel, are provided with leakage detection systems.

The systems within the drywell share a common area; therefore their leakage detection systems are common. Each of the required leakage detection systems inside the drywell is designed with a capability to detect established leakage rate limits.

Major components within the drywell that by nature of their design are sources of leakage (e.g., pump seals, valve stem packing) are contained and piped to an equipment drain sump and thereby identified.

Equipment associated with systems within the drywell (e.g., vessels, piping, fittings) share a common free volume; therefore their leakage detection systems are common and thereby unidentified. Steam or water leaks from such equipment are collected ultimately in the floor drain sumps.

Each of the sumps equipment drain is protected to prevent leaks of an identified source from masking those from unidentified sources.

Outside the drywell, the piping within each system monitored for leakage is in compartments or rooms separate from other systems wherever feasible so that leakage may be detected by sump level, ambient or differential temperature indications, or high process flow.

7.6.1.4.3.2 Main Steam Line Leak Detection

7.6.1.4.3.2.1 Subsystem Identification

The main steam lines are constantly monitored for leaks by the leak detection system (drawing E02-1LD99). Steam line leaks will cause changes in at least one of the following monitored operating parameters: area temperature, flow rate, or low water level in the reactor vessel. If a leak is detected, the detection system responds by annunciating the abnormal condition and initiating a steam line isolation trip logic signal.

The main steam line break leak detection subsystem consists of three types of monitoring circuits: a) the first of these monitors the ambient area temperature, causing an alarm and main steam line isolation valve logic to be initiated when the monitored temperature rises above a preset maximum. b) The second type of circuit monitors the volumetric flow rate through the main steam lines to provide comparative information and to initiate an alarm circuit and closure of isolation valves when the monitored flow rate exceeds a preset maximum. c) The third type of circuit detects low water level in the reactor vessel and sends a trip signal to the isolation valve logic when level decreases below a preselected set point.

The area temperature monitoring feature is discussed in Subsection 7.3.1.1.2.4.1.3.

The main steam line flow monitoring feature is discussed in Subsection 7.3.1.1.2.4.1.4.

The reactor vessel level monitoring feature is discussed in Subsection 7.3.1.1.2.4.1.1.

7.6.1.4.3.3 RCIC System Leak Detection

7.6.1.4.3.3.1 Subsystem Identification

The steam lines of the RCIC system are constantly monitored for leaks by the leak detection system. Leaks from the RCIC will cause a change in at least one of the following monitored operating parameters: sensed equipment area or MSL pipe tunnel temperature, steam pressure or steam flow rate. If the monitored parameters indicate that a leak may exist, the detection system (drawing E02-1LD99) responds by activating an annunciator and initiating an RCIC isolation trip logic signal.

The RCIC leak detection subsystem consists of four types of monitoring circuits. The first of these monitors equipment area, or main steam line tunnel ambient temperature, actuating an annunciator when the temperature rises above a preset maximum. Differential temperature monitors in these areas provide indication only. The second type of circuit utilized by the leak detection system monitors the flow rate (differential pressure) through the steam line, actuating an annunciator when the observed differential pressure (excess flow rate) rises above a preset maximum. Outputs from these Class 1E monitoring circuits are also used to generate the RCIC auto-isolation signal. The Main Steam Line (MSL) tunnel ambient temperature is time delayed to prevent RCIC system isolation caused by leakage from other system piping. Some of the RCIC piping share the common area of the MSL tunnel. To keep the RCIC system available for water makeup, upon main steam line isolation due to a high temperature condition, the RCIC high temperature monitors are time delayed. The time delay will allow MSL tunnel temperature reduction if a system other than RCIC is the leaking source.

The third type of monitoring circuit monitors the RCIC area sump pump running and sump fillup times and is identical to those described in Subsection 7.7.1.24.10.1.1 for the drywell floor drain sump. Their circuit provides annunciation only.

The fourth type of monitoring circuit monitors radiation level in air particulates and noble gases and iodine in air.

7.6.1.4.3.3.2 RCIC Area and MSL Pipe Tunnel Temperature Monitoring

7.6.1.4.3.3.2.1 Circuit Description

The area ambient subsystem temperature monitoring circuits are similar to those described for the main steam line tunnel temperature monitoring system, (See Subsection 7.3.1.1.2.4.1.3), except only two RCIC channels are provided in lieu of four and there is a time delay on the MSL tunnel temperature inputs.

7.6.1.4.3.3.2.2 Subsystem Logic and Sequencing

Using 1 out of 2 logic, any RCIC high area or MSL tunnel ambient temperature monitoring circuit activates an annunciator and initiates a RCIC isolation signal when the temperature rises above a preset limit. Annunciation and isolation for the MSL tunnel inputs occur at start and end of the time delay. In addition to isolating the steam line and pump suction line, the RCIC turbine is tripped.

7.6.1.4.3.3.2.3 Subsystem Bypasses and Interlocks

A bypass/test switch is provided in each logic channel for the purpose of testing the temperature monitors without initiating RCIC system isolation. Placing the keyswitch in test position in one logic channel will not prevent operation of the temperature monitors in the opposite logic channel when required for RCIC system isolation. No interlocks are provided from this subsystem. High area ambient temperatures in the RHR equipment areas will provide isolation signals to close the RCIC steam line isolation valves.

7.6.1.4.3.3.2.4 Subsystem Redundancy and Diversity

Two physically and electrically independent channels of leak detection are supplied to those systems designed to isolate upon receipt of the leak detection signal and required to meet the single failure and redundancy criteria.

Redundancy is provided by supplying two instrument channels for ambient temperatyre. Diversity is satisfied by providing ambient temperatre, low steam pressure, and steam line high flow.

7.6.1.4.3.3.2.5 Subsystem Testability

Testability is discussed in Subsection 7.6.1.4.5.

7.6.1.4.3.3.3 Not Used

7.6.1.4.3.3.4 RCIC Flow Rate Monitoring

7.6.1.4.3.3.4.1 Circuit Description

The RCIC steam line from the main steam line leading to the RCIC turbine is instrumented with two sets of two differential pressure sensors connected to measure the differential pressure (steam flow rate) created as steam flows through an elbow in the line so that the steam flow rate can be used to indicate the presence of a leak (or break). In the presence of a leak, the RCIC system responds by generating the auto-isolation signal and actuating an annunciator.

7.6.1.4.3.3.4.2 Logic and Sequencing

Redundant instrumentation consists of two instrument channels of differential pressure monitoring equipment in each logic channel. Two instrument channels monitor differential pressure (high flow) in the drywell RCIC steam line and two instrument channels monitor differential pressure (high flow) in the auxiliary building RCIC steam line. One instrument channel from each location is combined in a 1-out-of-2 arrangement for use in a logic channel. The other two instrument channels provide inputs to the second logic channel. Since the isolation function for the RCIC system is accomplished by independent actuation of either logic channel, a single failure of a system component in either logic channel will not prevent the required isolation function. In addition to isolating the steam line and pump suction line, the RCIC turbine is tripped.

7.6.1.4.3.3.4.3 Bypass and Interlocks

No bypasses or interlocks are provided.

7.6.1.4.3.3.4.4 Redundancy and Diversity

Redundancy of the RCIC system is accomplished using two separate logic channels, each feeding their respective inboard and outboard isolation valves. Each logic channel incorporates two channels of RCIC high steam flow monitoring instrumentation.

Diversity is satisfied by providing ambient temperature and RCIC steam line flow monitoring.

7.6.1.4.3.4 RHR System Leak Detection

7.6.1.4.3.4.1 Subsystem Identification

Leaks from the RHR system are detected by equipment area ambient temperature.

If the monitored parameters indicate that a leak may exist, the detection system responds by activating annunciators in the main control room and initiating an RHR isolation trip logic signal.

The RHR leak detection subsystem consists of two types of monitoring circuits. The first of these monitors ambient temperature, actuating an annunciator when the observed temperature rises above a preset maximum. Outputs from this circuit are also used to generate the RHR auto-isolation signal. The second type of monitoring circuit monitors the RHR areas three sump pump running and sump fillup times and is identical to those described in Subsection 7.7.1.24.10.1.1 for the drywell floor drain sump. This circuit provides annunciation only.

Detection of leakage from ECCS system during the long term post-LOCA cool-down recovery will involve leak detection from the RHR system. RHR room ambient temperatures can be monitored from the main control room. RHR flow and reactor water level can be also monitored from the main control room to detect a large leak in the RHR system. All of these instruments are Class 1E instruments.

The area temperature monitoring feature is discussed in Subsection 7.3.1.1.2.4.1.11.

7.6.1.4.3.4.2 RHR Steam Process Line Pressure Monitoring

(Not applicable to RHR)

7.6.1.4.3.4.3 RHR Flow Rate Monitoring

(Not applicable to RHR)

7.6.1.4.3.4.4 RHR Process Line Pressure Monitoring

(Not applicable to RHR)

7.6.1.4.3.5 Reactor Water Clean-Up System Leak Detection

7.6.1.4.3.5.1 Subsystem Identification

The purpose of this part of the leak detection system is to monitor the reactor water cleanup system components, activating a system annunciator should a system leak of sufficient magnitude occur. In addition to annunciation, a high differential flow comparison will activate automatic isolation of the cleanup system.

The reactor water cleanup (RWCU) leak detection subsystem consists of the following two types of monitoring circuits.

a. Leakage monitoring by the flow comparison of RWCU system water inlet and outlet flow rate. See Subsection 7.3.1.1.2.4.1.9.

b. Ambient temperature monitoring. See Subsection 7.3.1.1.2.4.1.10.

7.6.1.4.4 System and Subsystem Separation Criteria

Separate channels are provided to monitor the same system variable for all leak detection instrumentation required for safety. These separate channels are both physically and electrically separated.

7.6.1.4.5 System and Subsystem Testability

The proper operation of the sensors and the logics associated with the leak detection systems is verified during the leak detection system preoperational test and during inspection tests that are provided for the various components during plant operation. Each ambient temperature switch which provides an isolation signal, is connected to one element of a dual thermocouple element.

Each temperature switch contains a trip light which illuminates when the temperature exceeds the set point. To verify the thermocouple (sensor) input, a comparison of the sensor reading from each trip channel and the recorded channel is made. The recorded channel monitors the second element of the dual element thermocouples. The first element is part of the division one trip channel. To test the temperature trip switches, a simulated trip level signal is input to the device from an external source. In addition, keylock test switches are provided so that instrument and logic channels can be tested without sending a signal to isolate the system involved. Thus, a complete system check can be confirmed by checking actuation of the trip logic relay associated with each temperature switch.

RWCU differential flow leak detection alarm units are tested by inputting an electrical signal to simulate a high differential flow. Alarm and indicator lights monitor the status of the trip circuit.

Testing of flow and reactor vessel level and pressure leak detection equipment is described in the Primary Containment and Reactor Vessel Isolation Section, section 7.3.1.1.2.

7.6.1.4.6 System and Subsystem Environmental Considerations

The sensors, wiring, and electronics of the leak detection system which are associated with the isolation valve logic are designed to withstand the envelope conditions that follow a design basis loss-of-coolant accident. (See Section 3.11.5)

All portions of the leak detection system which provide for isolation of all or portions of systems are environmentally qualified to meet the requirements for Class 1E electrical equipment.

7.6.1.4.7 System and Subsystem Operational Considerations

The operator is kept aware of the status of the leak detection system variables through meters, computer displays and recorders which indicate the measured variables in the main control room. If a trip occurs, the condition is continuously annunciated in the main control room.

Leak detection system bypass switches are provided in the main control room to allow bypassing of certain trip functions during testing and as described in section 7.3.1.1.2.4.1.9.6. The Technical Specifications and the Operational Requirements Manual (ORM) limit the time for the system to be bypassed.

During normal operation the main control room operator can manually operate valves which are affected by the leak detection system. Once a trip signal has been generated, the condition

which generated the trip signal must clear and the isolation logic must be reset before further manual valve operations can be performed. Manual reset switches are provided in the main control room.

There is no vital supporting system which supplies direct support for the leak detection systems.

7.6.1.5 Neutron Monitoring System - Instrumentation and Controls

The neutron monitoring system consists of six major subsystems:

(1) Source range monitor subsystem (SRM),

(2) Intermediate range monitor subsystem (IRM),

(3) Local power range monitor subsystem (LPRM),

(4) Average power range monitor subsystem (APRM),

(5) Traversing in-core probe subsystem (TIP), and

(6) Oscillation Power Range Monitoring subsystem (OPRM)

7.6.1.5.1 System Identification

The purpose of this system is to monitor power generation in the core and in the case of the SRMs, IRMs, OPRMs and APRMs provide signals to the reactor protection system to indicate excessive conditions. It also provides information for operation and control of the reactor.

The IRM, OPRM and APRM subsystems provide a safety function, and have been designed to meet particular requirements established by the NRC. The LPRM Subsystem has been designed to provide a sufficient number of LPRM inputs to the APRM subsystem to meet the APRM requirements. The system is classified as shown in Tables 3.2-1. The safety related subsystems are qualified in accordance with Sections 3.10 and 3.11.

7.6.1.5.2 Power Source

The power sources for each subsystem are discussed in the individual circuit description.

7.6.1.5.3 Source Range Monitor (SRM) Subsystem

7.6.1.5.3.1 Equipment Design

Refer to Subsection 7.7.1.22.

7.6.1.5.4 Intermediate Range Monitor (IRM) Subsystem

7.6.1.5.4.1 Equipment Design

7.6.1.5.4.1.1 Circuit Description

The IRM monitors neutron flux from the upper portion of the SRM range to the lower portion of the power range. The IRM subsystem has eight IRM channels, each of which includes one

detector that can be positioned in the core by remote control. The detectors are inserted into the core for a reactor startup and are withdrawn after the reactor mode selector switch is turned to RUN.

(1) Power Supply

Power is supplied separately from four 120 Vac NSPS sources. The supplies are split according to their uses so that loss of a power supply will result in loss of only one division of the reactor protection system.

(2) Physical Arrangement

Each detector assembly consists of a miniature fission chamber attached to a low-loss, quartz-fiber-insulated transmission cable. When coupled to the signal conditioning equipment, the detector produces a reading of full scale on the most sensitive range with a neutron flux of 4×10^8 nv. The detector cable is connected underneath the reactor vessel to a tri-shielded coaxial cable that carries the pulses generated in the fission chamber to the preamplifier.

The detector and cable are located in the drywell. They are movable in the same manner as the SRM detectors and use the same type of mechanical arrangement (see Figures 7.6-10, 7.6-11 and Reference 1).

(3) Signal Conditioning

A voltage amplifier unit located outside the drywell serves as a preamplifier. This unit converts the current pulses to voltage pulses, modifies the voltage signal, and provides impedance matching. The preamplifier output signal is coupled by a cable to the IRM signal conditioning electronics (see Figure 7.6-15, IRM Block Diagram).

Each IRM channel receives its input signal from the preamplifier and operates on it with various combinations of preamplification gain and amplifier attenuation ratios. The amplification and attenuation ratios of the IRM and preamplifier are selected by a remote range switch that provides 10 ranges of increasing attenuation (the first 6 called low range and the last 4 called high range) acting on the signal from the fission chamber. As the neutron flux of the reactor core increases from 1×10^8 nv to 1.5×10^{13} nv, the signal from the fission chamber is attenuated to keep the input signal to the inverter in the same range. The output signal, which is proportional to neutron flux at the detector, is amplified and supplied to a locally mounted meter. Outputs are also provided for a remote meter and recorder.

(4) Trip Functions

The IRM Scram Trip Functions are discussed in Section 7.2. The IRM trips are shown in Table 7.6-4. The IRM Rod Block Trip Functions are discussed in Subsection 7.7.1.2.3.2.3.

7.6.1.5.4.1.1.1 Bypasses and Interlocks

The arrangement of IRM channels allows two IRM channels in one trip channel to be bypassed without compromising intermediate range neutron monitoring.

7.6.1.5.4.1.2 Redundancy

The IRM system consists of 8 IRM channels, two of which are connected to each of four trip channels. The redundancy and single failure requirements are met because any single failure with the IRM system cannot prevent needed safety action of the IRM system. (See also Subsection 7.2.1.1.4.1)

7.6.1.5.4.1.3 Testability

Each IRM channel is tested and calibrated using the procedures listed in the IRM instruction manual. The IRM detector drive mechanisms and the IRM rod blocking functions are checked in the same manner as for the SRM channels. Each IRM channel can be checked to ensure that the IRM high flux scram function is operable.

7.6.1.5.4.2 Environmental Considerations

The wiring, cables, and connectors located in the drywell are designed for the same environmental conditions as the IRM detectors.

The IRM pre-amplifiers, located outside the containment and the monitors, located in the main control room, are designed to operate under all expected environmental conditions in those areas. The IRM system components are designed to operate during and after certain design basis events such as earthquakes, accidents, and anticipated operational occurrences.

7.6.1.5.4.3 Operational Considerations

The IRM range switches must be upranged or downranged to follow increases and decreases in power within the range of the IRM to prevent either a scram or a rod block. The IRM detectors must be inserted into the core whenever these channels are needed, and withdrawn from the core, when permitted, to prevent their burnup. The identification scheme for the IRM subsystem is the same as that described for RPS in Subsection 7.2.2.1.2.3.1.22.

7.6.1.5.5 Local Power Range Monitor (LPRM) Subsystem

7.6.1.5.5.1 Equipment Design

7.6.1.5.5.1.1 Circuit Description

The LPRM consists of fission chamber detectors, signal conditioning equipment, display and alarm equipment, associated power supplies and cabling, and trip functions. The LPRM provides outputs to the APRM, to displays and annunciators, and to the performance monitoring system through the computer interface module.

(1) Power Supply

Power for the LPRM is supplied by the four 120 Vac NSPS divisional buses. Approximately one quarter of the LPRMs are supplied from each bus. Each

LPRM detector has a separate power supply in the control room, which furnishes the detector polarizing potential. This power supply is adjustable from 75 to 200 Vdc. The maximum current output is three milliamps. This ensures that the chambers can be operated in the saturated region at the maximum specified neutron fluxes. For maximum variation in the input voltage or line frequency, and over extended ranges of temperature and humidity, the output voltage varies no more than two volts. Each divisional LPRM "cards" of amplifiers are supplied operating voltages from four separate low voltage power supplies.

(2) Physical Arrangement

The LPRM includes 33 LPRM detector strings having detectors located at different axial heights in the core; each detector string contains four fission chambers. These assemblies are distributed to monitor four horizontal planes throughout the core. Drawing E02-1NR99 shows the LPRM detector radial layout scheme that provides a detector assembly at every fourth intersection not containing control crosses of the water channels around the fuel bundles. Thus, the uncontrolled water gap has either an actual detector assembly or a symmetrically equivalent assembly in some other quadrant. The LPRM assembly consists of four neutron detectors contained in a housing containing 5 dry tube thimbles (see Figure 7.6-17). The housings are installed and removed through the top of the vessel (when the head is removed). The individual detectors are installed into and removed from the housing from below the vessel. The upper end of the housing is held into the top of the top fuel guide by a spring-loaded plunger. A permanently installed sleeve (in core guide tube and in core housing) locates and constrains the assembly below the lower core plate and provides a sealing surface under the reactor vessel. Thimbles, which are welded to the vessel extend to the access area below the vessel where they terminate in a replaceable flange. The flange mates to a machined sealing surface on the in-core dry tube assembly.

Each LPRM detector assembly contains four miniature ion chambers with an associated solid sheath cable. The chambers are vertically spaced in the LPRM detector assemblies in a way that gives adequate axial coverage of the core, complementing the radial coverage given by the horizontal arrangement of the LPRM detector assemblies. Each ion chamber produces a current that is coupled with the LPRM signal conditioning equipment to provide the desired scale indications.

Each miniature chamber consists of two concentric cylinders, which act as electrodes. The inner cylinder (the collector) is mounted on insulators and is separated from the outer cylinder by a small gap. The gas between the electrodes is ionized by the charged particles produced as a result of neutron fissioning of the uranium-coated outer electrode. The chamber is operated at a polarizing potential of approximately 100 Vdc. The negative ions produced in the gas are accelerated to the collector by the potential difference maintained between the electrodes. In a given neutron flux, all the ions produced in the ion chamber can be collected if the polarizing voltage is high enough. When this situation exists, the ion chamber is considered to be saturated. Output current is then independent of operating voltage.

Each housing also contains a calibration tube for a traversing in-core probe. Numerous tests have been performed on the chamber assemblies including tests of linearity, lifetime, gamma sensitivity, and cable effects, (Reference 1). These tests and experience in operating reactors provide confidence in the ability of the LPRM subsystem to monitor neutron flux to the design accuracy throughout the design lifetime.

(3) Signal Conditioning

The current signals from the LPRM detectors are transmitted to the LPRM amplifiers in the control room. The current signal from a chamber is transmitted directly to its amplifier through coaxial cable. The amplifier is a linear current amplifier whose voltage output is proportional to the current input and therefore proportional to the magnitude of the neutron flux. Low level output signals are provided that are suitable as an input to the computer, recorders, etc. The output of each LPRM amplifier is isolated to prevent interference of the signal by inadvertent grounding or application of stray voltage at the signal terminal point.

The LPRM amplifier signals are indicated on the operator's control console. When a central control rod is selected for movement, the output signals from the amplifiers associated with the nearest LPRM detectors are displayed on operator's control console. The four LPRM detector signals are displayed on 4 digital displays. The operator can readily obtain readings of all the LPRM amplifiers by selecting the control rods in order. Subsection 7.6.1.7, "Rod Control and Information System" describes in greater detail the indications on the operator's control console.

(4) Trip Functions

The trip circuits for the LPRM provide trip signals to activate lights and annunciators. Table 7.6-5 indicates the trips.

The trip levels can be adjusted to within 0.5% of full-scale deflection and are accurate to 1% of full-scale deflection in the normal operating environment.

7.6.1.5.5.1.2 Bypasses and Interlocks

Each LPRM channel may be individually bypassed. When the maximum number of bypassed LPRMs associated with any APRM channel has been exceeded, an inoperative trip is generated by that APRM.

7.6.1.5.5.1.3 Redundancy

The LPRM channels meet the redundancy criterion because of the multiplicity of sensing channels. The minimum number of LPRMs that must be in service is shown in the CPS Technical Specifications.

7.6.1.5.5.1.4 Testability

LPRM channels are calibrated using process computer and TIP data, and are tested with procedures from the applicable instruction manuals.

7.6.1.5.5.2 Environmental Considerations

Each individual chamber of the assembly is a moisture-proof, pressure-sealed unit. The chambers are designed to operate up to 575°F and 1250 psig. The wiring, cables, and connectors located within the drywell are designed for continuous duty up to 270°F; 100% relative humidity and a 4-hour single exposure rating of 482°F at 100% relative humidity. The LPRMs are capable of functioning during and after certain design basis events such as earthquakes and anticipated operational occurrences.

7.6.1.5.5.3 Operational Considerations

The LPRM is a monitoring system with no special operating considerations.

7.6.1.5.6 Average Power Range Monitor (APRM) Subsystem

7.6.1.5.6.1 Equipment Design

7.6.1.5.6.1.1 Description

The APRM subsystem has four APRM channels. Each channel uses input signals from a number of LPRM channels. One APRM channel is associated with each trip system of the reactor protection system.

(1) Power Supply

The APRM channels receive power from the 120 Vac supplies used for NSPS power. Power for each APRM trip unit is supplied from the same power supply as the APRM it services. APRM channels A, B, C and D are powered from Division 1, 2, 3 and 4 ac buses respectively of the NSPS. The ac bus used for a given APRM channel also supplies power to its associated LPRMs.

(2) Signal Conditioning

The APRM channel uses electronic equipment that averages the output signals from a selected set of LPRMs, trips units that actuate automatic devices, and signals readout equipment. Each APRM channel can average the output signals from 33 LPRMs. Assignment of LPRMs to an APRM follows the pattern shown in drawing E02-1NR99. Position A is the bottom position, Positions B and C are above Position A, and Position D is the topmost LPRM detector position. The LPRM signals from all four core axial LPRM detector positions provide core wide coverage of the reactor flux patterns.

The APRM amplifier gain can be adjusted by combining fixed resistors and potentiometers to allow calibration. The averaging circuit automatically corrects for the number of unbypassed LPRM amplifiers providing inputs to the APRM.

Each APRM channel receives two flow signals one from each recirculation loop, summed together as representative of total recirculation flow. The flow signals are sensed from two pairs of elbowstaps, one pair in each recirculation loop.

(3) Trip Function

APRM system trips are summarized in Table 7.6-6. The APRM Scram Trip Function is discussed in Section 7.2. The APRM circuit arrangement for RPS trip input is shown in Figure 7.6-20. The APRM Rod Block Trip Function is discussed in Subsection 7.6.1.7.3.

7.6.1.5.6.1.2 Bypasses and Interlocks

One APRM channel may be bypassed at any time. The trip logic when bypassed will become 2-out-of-3 instead of 2-out-of-4.

7.6.1.5.6.1.3 Redundancy

Four independent channels of APRMs monitor neutron flux. The four channels are separated into four divisions. Any two of the four APRMs indicating an abnormal condition will initiate a reactor scram.

7.6.1.5.6.1.4 Testability

APRM channels are calibrated using data from previous full power runs and are tested by procedures in the applicable instruction manual. Each APRM channel can be tested individually for the operability of the APRM scram and rod blocking functions by introducing test signals.

7.6.1.5.6.2 Environmental Considerations

All APRM equipment is installed and operated in a control room environment as described in Table 3.11-5. The APRM system is capable of functioning during and after certain design basis events such as earthquakes and anticipated operational occurrences.

7.6.1.5.6.3 Operational Considerations

The APRM system is a monitoring system which has no special operational considerations.

7.6.1.5.7 Oscillation Power Range Monitor (OPRM) System

7.6.1.5.7.1 Equipment Design

7.6.1.5.7.1.1 Description

The OPRM subsystem has four OPRM channels. Each channel uses input signals from a number of LPRM channels. One OPRM channel is associated with each trip system of the reactor protection system.

(1) Power Supply

The OPRM channels receive power from the 120 vac supplies used for NSPS power. Power for each OPRM trip unit is supplied from the same power supply as the OPRM it services. OPRM channels A, B, C and D are powered from Division 1, 2, 3 and 4 ac buses respectively of the NSPS. The ac bus used for a given OPRM channel is also the bus used by the associated APRM channel.

(2) Signal Conditioning

The OPRM system consists of four OPRM trip channels, one per RPS channel. The OPRM implements an Oscillation Detection Algorithm (ODA) with a Class 1E microprocessor, based on inputs from 33 LPRM signals. The channel consists of two OPRM modules either of which can generate a channel trip signal. An OPRM module is wired to the outputs of the LPRM flux amplifier cards in the LPRM page and APRM power and flow signals in the APRM page. Each OPRM module reads directly 16 or 17 locally wired LPRM signals and 17 or 16 LPRM signals from a fiber optic data link from its companion module. By sharing the signals between the two OPRM modules in a given channel, all 33 LPRM signals in the channel are monitored by each OPRM module.

The LPRMs are configured in the OPRM module into groups of up to 4 LPRMs called cells. There can be up to 18 cells in each OPRM module. LPRM signals may be input to more than one OPRM cell within a OPRM channel. The use of instantaneous flux and smaller grouping of LPRMs in cells provide a better resolution for detection of instability oscillations than the APRM system alone. By having cells consisting of more than one LPRM, but in a close proximity to each other, the OPRM will not be sensitive to single LPRM failures while still providing adequate margin to SCRAM, protecting the MCPR Safety Limit. The OPRM algorithm is processed for each cell, any of which can produce a channel alarm and trip. A minimum of one LPRM must be valid for a cell to remain valid.

Within each OPRM module, there are three separate algorithms for detecting stability related oscillations: the period based detection algorithm, the amplitude based algorithm, and the growth rate algorithm. The OPRM System implements these algorithms within the microprocessor based modules. These modules execute the algorithms based on LPRM input and generate alarms and trips based on these calculations. These trips result in tripping the Reactor Protection System (RPS) when the appropriate RPS trip logic is satisfied. In addition, alarms identify to the operator when the system is in an enabled region of operation, where oscillation might occur.

Only the period based detection algorithm is used in the safety analysis. The remaining algorithms provide defense in depth and additional protection against unanticipated oscillations. The period based detection algorithm detects an instability related oscillation based on the occurence of a predetermined number of consecutive period confirmations followed by a relative amplitude signal exceeding a set point. Upon detection of a stability related oscillation, a trip is generated for that OPRM channel. The OPRM channel trip inputs to the RPS trip logic.

In Operate mode, the OPRM module is always calculating the ODA, running self-health test, servicing the inter-page data link, broadcasting on the maintenance and plant computer data links, and providing annunciator indication. The Trip output is automatically armed (Trip Enable) when the programmed high APRM power and low core flow set points are reached.

(3) Trip Function

The Trip output is wired into the existing RPS trip circuits using a relay to provide electrical compatibility. Annunciator outputs are wired to the annunciator panel using relays to provide electrical compatibility and isolation. The operator interface with the system is via the annunciator outputs:

- Trip Enable (the OPRM is armed),
- Alarm (one or more cells calculating the period based algorithm have reached the pre-trip set point),
- Trip (one or more cells have tripped),
- INOP (the OPRM module may not be performing its ODA function),
- Trouble (the OPRM module is still performing its ODA function but needs attention)

7.6.1.5.7.1.2 Bypasses and Interlocks

One OPRM channel may be bypassed at any time. The trip logic when bypassed will become 2-out-of-3 instead of 2-out-of-4.

7.6.1.5.7.1.3 Redundancy

Four independent channels of OPRMs monitor neutron flux. The four channels are separated into four divisions. Any two of the four ORPM channels indicating an abnormal condition will initiate a reactor scram.

7.6.1.5.7.1.4 Testability

OPRM channels are calibrated using a dedicated maintenance terminal using procedures in the applicable instruction manual. Each OPRM channels can be tested individually for the operability of the OPRM scram by introducing test signals.

7.6.1.5.7.2 Environmental Considerations

All OPRM equipment is installed and operated in a control room environment as described in Engineering Standard MS-02.00. The OPRM system is capable of functioning during and after certain design basis events such as earthquakes and anticipated operational occurences.

7.6.1.5.7.3 Operational Considerations

The OPRM system is a monitoring system which has no special operational considerations.

7.6.1.5.8 Traversing In-Core Probe (TIP) Subsystem

The TIP system is discussed in Subsection 7.7.1.6.

7.6.1.6 Not Used

7.6.1.7 Rod Pattern Control System (RPCS) - Instrumentation and Controls

7.6.1.7.1 System Identification

The Rod Pattern Control System (RPCS) is a subsystem of the Rod Control and Information System (RCIS).

The purpose of the rod pattern control system (RPCS) is to reduce the consequences of the postulated rod drop accident to an acceptable level by restricting the patterns of control rods that can be established to predetermined sets.

7.6.1.7.2 Power Sources

120 Vac essential power is supplied to the two redundant channels of RPCS through the RCIS from the Division 1 and Division 2 120 Vac instrument bus. 120 Vac non-interruptible power is supplied to the rod drive cabinet from a non-divisional 120 Vac instrument bus.

7.6.1.7.3 Equipment Design

The Rod Pattern Control System (RPCS) is a dual channel system designed as a safety related system. The control logic for the RPCS is contained in the rod activity control cabinets, one cabinet for each division (see drawing E02-1RD99). These electronic circuits have, in permanent storage, the identification of all rod groups and logic control information required to prevent movement of rods into unacceptable rod patterns. The logic is hardwired and is not site programmable except through engineering design change requiring new electronic circuit cards.

There is a dual rod position probe for each drive. Each probe has two sets of reed switches for rod position information and will provide, through different connectors, inputs to different rod position multiplexers. Two rod position multiplexers are provided, one for each channel. These multiplexers transmit rod position data to the rod action controls. These controls will decode the multiplexed data and provide rod position data to the RPCS controller for all rods. The rod position multiplexers and controls are arranged in two divisions.

Rod position is the primary data input for RPCS. Other inputs to the RPCS controllers include reactor power level, mode of operation, identification of selected rod, drive mode requested by the operator and special modes of operation such as shutdown margin test.

A means of comparing the outputs of the RPCS logic devices is provided as a way of monitoring the performance of the two channels. Both channels must be operable and have identical outputs before rod motion is permitted. Failed comparison and circuit failures or inoperative conditions will be indicated in the main control room. RPCS outputs are transmitted to the two activity control sections of the RCIS in the form of a rod select and drive permission interlock. The two RPCS channels provide inputs separately to the two separate activity controls. These two inputs are then treated as other rod block interlocks and further compared in the non-divisional rod drive portion of the RCIS.

There are two rod insert and withdrawal control sequences designated A and B in the rod pattern control system. From 100% rod density (all rods inserted into the core - full-in) either sequence can be used for startup. The rod sequence is selected by pushbuttons on the operator control console. Each sequence has ten rod groups (1 through 10) and each rod

group is divided into less than or equal to seven subgroups. The order in which rods from the first four groups are withdrawn is restricted as described in the subsequent paragraphs.

These groups must be withdrawn from full-in to full-out and always form a checkerboard pattern in the core. Any group number (1, 2, 3, 4) may be selected as the first group for withdrawal. Groups 1 and 2 must be fully withdrawn before any rods from groups 3 or 4 can be moved, or groups 3 and 4 must be withdrawn before any rods from group 1 or 2 can be moved.

The first two groups are always moved from full-in to full-out. These motions can be either single rod or gang rods and single notch or continuous withdrawal. One fourth of all the control rods will be full-out when this criteria is accomplished.

The next two groups will be moved into banked or intermediate positions between full-in and full-out. The withdrawn control rods are banked to notch positions 00 $\rightarrow N_1 \rightarrow N_2 \rightarrow N_3 \rightarrow N_4 \rightarrow$ 48. N_1, N_2, N_3 and N_4 are flexible inputs that may vary from cycle to cycle. Gang rod or single rod motion is permitted in this range: however, all control rods within a group must be withdrawn to their designated positions before proceeding to the next bank positions.

All control rods within a group must be withdrawn to full-out before proceeding to the next rod group. Thus, all rods in the first four groups will be fully withdrawn and will form a checkerboard pattern establishing 50% rod density.

From 50% rod density to the low power set point (LPSP), the order in which groups 5-10 are to be withdrawn is as follows: rod groups 5 and 6 are to be withdrawn to notch positions 00 $\rightarrow N_1 \rightarrow$48. N_1 is to be a flexible input which may vary from cycle to cycle.

Any subgroup contained with group 7 $\rightarrow$10 can be withdrawn to any notch position provided that the rods assigned to a group positioned at 00 $\rightarrow N_1 \rightarrow N_2 \rightarrow N_3 \rightarrow N_4 \rightarrow$48. (e.g., if N_1 = 08, a rod cannot be moved from 04 $\rightarrow$12 without banking the group to 08 first.)

Any group may be selected next; however, if rods in group 7 or 8 are moved first, rods in group 9 and 10 cannot be moved until all rods contained in groups 5 and 6 and 7 or 8 are at notch position $\geq M_1$. If rods in group 9 or 10 are moved first, rods in group 7 and 8 cannot be moved until all rods contained in groups 5 and 6 and 9 or 10 are at notch position $\geq M_1$. In this mode of operation, ganged rod operation is permitted.

When the low power set point (LPSP) is reached, no further restrictions on rod pattern are imposed; however, Rod withdrawal/limiter (RWL) restrictions are imposed. This set point is determined to be the point above which the consequences of a rod drop accident are no longer consequential when compared with the design basis case in Chapter 15.4.9. This power level is derived by measuring first stage turbine pressure using transmitters and alarm units. There are two channels of instruments which are redundant and separated divisionally. These trip functions are input to the proper Rod Activity Control Cabinet and both instrument channels must trip to bypass the RPCS. These instruments are continuously monitored, and any instruments out of service or gross failure is alarmed and indicated in the control room.

From the LPSP on up in power, continuous rod withdrawals are restricted to prevent excessive change in the heat flux rate. A power dependent number of notches is allowed for rod movement, and motion beyond this point is blocked.

Shutdown follows the same rules as above but in reverse order. The only difference is that an approach alarm, called the low power alarm point, is provided so that the operator may prepare valid rod positions for proper shutdown below the LPSP.

7.6.1.7.3.1 Bypass of the RPCS

Because of the possibility of stuck rods, provisions are made by bypass failed inputs per the following rules. Substitute rod positions may be entered into the RPCS providing:

(1) Only one entry per channel per subgroup is allowed.

(2) Upon rod motion and a new position scan, the substitute rod position will be overlayed with new data.

(3) Unknown and substitute positions are logged and indicated in the main control room.

Failed drives may be bypassed entirely. The maximum expected number of bypass switches is 8 (hardware is expandable to 20). Bypassed rods will not be checked by the RPCS. All bypass switches are under keylock control. All bypass conditions including substitute rod positions are alarmed, indicated and logged in the main control room and performance monitoring system.

In addition to the periodic self-test mode of system operation, the RCIS can be routinely checked for correct operation by manipulating control rods using the various methods of control.

Detailed testing and calibration can be performed by using standard test and calibration procedures for the various components of the Rod Control and Information circuitry.

7.6.1.7.4 Environmental Considerations

The Rod Control and Information System is not required for safety functions, nor required to operate after the design basis accident. The Rod Control and Information System is required to operate in the normal plant environments for power generation purposes only.

The hydraulic control units are located in the containment.

The logic, control units and instrumentation readout are located in the control room.

The control rod position detectors are located beneath the reactor vessel in zone 3 of the drywell. For the environments encountered in these areas, refer to the applicable tables in Section 3.11.

7.6.1.7.5 Operational Considerations

7.6.1.7.5.1 General Information

The Rod Control and Information System (RCIS) is totally operable from the main control room. Manual operation of individual control rods is possible with pushbuttons to effect control rod insertion, withdrawal, or settle. Rod position indicators, described in Subsection 7.7.1.2.3.3, provide the necessary information to ascertain the operating state and position of all control rods. Conditions which prohibit control rod withdrawal are alarmed with the rod block annunciator.

7.6.1.7.6 Separation

The RPCS is a two channel system. Separation is maintained between the redundant portions of the system to assure compliance with the separation and single failure criteria.

7.6.1.8 End of Cycle Recirculation Pump Trip (EOC-RPT) System - Instrumentation and Controls

7.6.1.8.1 System Identification

The recirculation pump trip is provided to supplement shutdown at the end of a fuel cycle when rod worths are reduced by core nuclear characteristics. The trip system includes the sensors, logic circuitry, load drivers and circuit breakers that cause main power to be disconnected from both recirculating pumps upon closure signals from the turbine stop valves or turbine control valves in the event of a turbine trip or generator load rejection above 33.3 percent reactor power. This trip shifts the pumps to the low frequency motor generators.

The recirculation pump trip system is designed to aid the RPS in protecting the integrity of the fuel barrier. Turbine stop valve closure or turbine control valve fast closure will initiate a scram and concurrent recirculation pump trip above 33.3 percent reactor power in order to keep the core within the thermal hydraulic safety limits during operational transients.

To mitigate the potential consequences of a postulated anticipated transient without scram (ATWS) event, a non-safety related recirculation pump trip (ATWS-RPT) subsystem is provided as part of the ATWS system and is described in Subsection 7.7.1.25.2.

7.6.1.8.1.1 Safety Classification

The recirculation pump trip (EOC-RPT) system is a nuclear safety-related (Class 1E) system.

7.6.1.8.1.2 Reference Design

See Table 7.1-2. Sensors and logic circuitry are shared with RPS.

7.6.1.8.2 Power Sources

The EOC-RPT system utilizes the NSPS power supplies for the logic and the 125-Vdc for the breaker trip coils. The 125-Vdc is supplied by four separate divisions of station batteries which are Class 1E and also utilized by the reactor protection and emergency core cooling systems.

7.6.1.8.3 Equipment Design

7.6.1.8.3.1 Initiating Circuits

Typical EOC-RPT initiation circuitry is depicted in Figure 7.2-7. RPS inputs sense turbine stop valve closure (turbine trip) or turbine control valve fast closure (load rejection). These inputs utilize four-division RPS logic to actuate the EOC-RPT system. Actuation of the EOC-RPT system causes each division of the RPS to energize a trip coil in its associated RPT breaker. The devices utilized to sense turbine trip and full load rejection are discussed in Subsection 7.2.1.1.4.2.

7.6.1.8.3.2 Logic

The basic logic arrangement is shown on drawing E02-1RP99. The design uses a two-out-of-four RPS sensor logic for turbine control valve and turbine stop valve position, to actuate the EOC-RPT system. Failure to initiate an actuation of EOC-RPT system requires failure of the sensor logic in more than two RPS divisions.

Each recirculation pump is supplied with fast speed power through two RPT breakers in series that may be tripped by the EOC-RPT system, producing a one-out-of-two trip logic for each pump. (Pump A may be tripped by either RPS division 1 or 3, and Pump B may be tripped by either RPS division 2 or 4). Failure of the EOC-RPT system to trip a recirculation pump requires failure in both divisions associated with its RPT breakers.

Both EOC-RPT breakers for each recirculation pump trip upon actuation of the EOC-RPT system. Each RPS division energizes one trip coil that causes one recirculation pump to trip off the main power supply.

The EOC-RPT function is automatically bypassed if reactor power is less than 33.3 percent of its rated value as indicated by turbine first stage pressure. No single failure in the bypass circuit can prevent an EOC-RPT trip.

7.6.1.8.3.3 Actuated Devices

The actuator logic allows current to flow into the breaker trip coils when a trip signal is received. The breakers interrupt the main power supply to the recirculation pumps when the coil is energized.

7.6.1.8.3.4 Separation

Sensors utilized to monitor for turbine trip and full load rejection are incorporated in the reactor protection system, where they are arranged in a four-divisional system for input to the EOC-RPT system. All system wiring outside the cabinets is run in accordance with applicable separation requirements.

7.6.1.8.3.5 Testability

See Subsection 7.2.1.1.4.8.

7.6.1.8.4 Environmental Considerations

The electrical modules and sensors are located in the main control room and the turbine building. The environmental conditions for these areas are shown in Section 3.11.

7.6.1.8.5 Operational Considerations

7.6.1.8.5.1 General Information

Actuator logic is designated by divisions 1, 2, 3, and 4 and actuation devices (breaker trip coil) by divisions 1, 2, 3 and 4. The trip conditions of sensors and logic devices are shown in drawing E02-1RP99.

7.6.1.8.5.2 Reactor Operation Information

(1) Indicators

a. Logic test indicators, wired across the trip contacts, extinguish when actuator logic closes the contact to the breaker trip coil.

b. Trip condition indicators will be energized when the breaker is in a tripped condition as indicated by switch contacts mechanically tied to the breaker mechanism.

c. Where practical, trip coil continuity lights are provided to indicate coil operability.

(2) Annunciators

a. Trip initiate annunciation is indicated by trip channel monitoring.

b. Recirculation Pump trip condition is annunciated.

7.6.1.8.5.3 Setpoints

Setpoints are discussed in the CPS Operational Requirements Manual.

7.6.1.8.6 IEEE 279 Design Basis Considerations

IEEE Standard 279 Section 3 Paragraph 1 through 9 defines the design-basis requirements. A listing of each of these requirements and its applicability to the EOC-RPT system is as follows:

(1) Document the Generating Station Conditions which Require Protective Action - EOC-RPT is a system which provides more rapid reactor shutdown for two types of turbine transients about 33.3% reactor power. No additional conditions requiring protective action are involved.

(2) Generating Station Variables - the EOC-RPT system monitors two station variables directly to provide action, turbine control valve and turbine stop valve position.

(3) Documentation of Minimal Number and Location of Sensors Required to Adequately Monitor Variables Having Spatial Dependence - (same as Subsection 7.2.1.2.3).

(4) Operational Limits - (Same as Subsection 7.2.1.2.4).

(5) Margin Between Operational Limit and Unsafe Condition - (Same as Subsection 7.2.1.2.5).

(6) Levels That When Reached Will Require Protective Action - (same as Subsection 7.2.1.2.6) applicable for RPT.

(7) Document the Range of Transient and Steady State Conditions Throughout Which the System Must Perform - see Subsections 8.3.1 and 8.3.2.

(8) Document the Malfunctions, Accidents and Other Unusual Events Which Could Cause Damage - see Subsection 7.2.1.2.8.

(9) Document Minimum Performance Requirements - (same as Subsection 7.2.1.2.9).

7.6.1.9 Fuel Pool Cooling System

7.6.1.9.1 System Identification

The fuel pool cooling portion of the fuel pool cooling and cleanup system consists of the upper containment pool cooling and the spent fuel pool cooling systems. The cooling portion of the integrated fuel pool cooling and cleanup (FPC&C system) is described in this section. The cleanup (filter/demineralizer) subsystem is classified as non-essential and is described in Section 9.1.3.

The FPC&C system instrumentation and control provides annunciation, indication, and control so that the fuel pool cooling system can maintain the shielding water temperature in the fuel pools below a preset safe limit. It also maintains the reactor water below a desired temperature and at a degree of clarity necessary for fuel handling and reactor serviceability.

7.6.1.9.2 Power Sources

The FPC&C control power is provided from the same electrical separation division which provides power to the equipment being controlled. Safety-related system instrumentation receives power from its respective divisional ESF power bus.

7.6.1.9.3 Equipment Design

Two 100% capacity fuel pool cooling subsystems are used. Required instrumentation and controls designed to Seismic Category I and Class 1E requirements are provided to operate each subsystem independent of the other. In addition, non-safety-related instrumentation is provided to monitor the spent fuel temperature and level, upper containment pool level, surge tanks level and the FPC&C system performance during normal operation.

Makeup water to the pools is provided from the cycled condensate system. During abnormal operations, the shutdown service water system can supply pool makeup water and cooling water using either of the FPC&C heat exchangers or the residual heat removal heat exchanger, subsystem A, for cooling.

7.6.1.9.4 Circuit Description

7.6.1.9.4.1 Instrumentation

A pressure indicating switch located immediately downstream of each FPC&C pump actuates an annunciator in the main control room on low pressure and indicates the discharge pressure of the pump. FPC&C pump discharge pressure is the primary indicator of system operation.

Temperature elements are located in the outlet of each of the FPC&C heat exchangers. The temperature elements provide inputs to a recorder located in the main control room.

Two pressure transmitters, one for each FPC&C subsystem, are located at the FPC&C pump suctions. The pressure transmitters provide inputs to analog comparator trip units which on low pressure activate annunciators in the main control room and interlock the FPC&C pumps.

Two temperature elements are located in the spent fuel storage pool. The temperature elements provide input to a recorder located in the main control room. The temperature recorder provides a high temperature alarm in the main control room.

Two level switches located at the spent fuel storage pool actuate low level and low-low level annunciators in the main control room.

A level transmitter is provided to monitor the spent fuel pool surge tanks level and is connected to the tanks common drain. Indication of level is provided by the performance monitoring system.

Two level switches are provided at the upper containment pool. One level switch is located at the reactor vessel pool and the other at the transfer pool. The switches actuate a low level annunciator in the main control room.

A flow control system is provided to regulate approximately 25% of the total system flow through the FPC&C filter/demineralizer (F/D) train. To accomplish this, a flow orifice is located in the return piping header from the F/D vessels. A differential pressure type flow transmitter connected across the orifice senses the differential pressure and transmits a proportionate electronic signal to a flow controller. The flow controller compares the required flow value (approximately 1000 gpm) against the actual flow value and generates an electronic signal to control valves to cause the flow to be adjusted to the flow value. Two control valves are provided, one for each F/D bypass line. Normally only one is modulated to control flow to the F/D train.

The liners of the spent fuel pool, cask storage pool, and fuel transfer pool are monitored for leakage. Drain lines from the area between the liner plate and supporting concrete contain a flow switch which actuates an alarm in the main control room if leakage greater than 5 gpm is detected. Two flow switches for the cask pool, and four for the spent fuel pool are provided, each monitoring a different area. Pool liner leak detection for the upper containment pools is described in Subsection 7.7.1.24.10.1.6.

A radiation monitor is provided to monitor the FPC&C heat exchanger service water discharge. This monitor will detect heat exchanger tube leaks and is described in Subsection 11.5.2.

7.6.1.9.4.2 Controls

Each FPC&C pump is controlled by a switch in the main control room. Low pressure at the FPC&C pump suction or suction valve not open prevents the pumps from starting. Low suction pressure will stop the pumps when they are running.

Each pump suction and isolation valve is controlled by a switch in the main control room. The FPC&C water flow to and from the pools inside the containment building is shutoff on a containment isolation signal by isolation valves discussed in Subsection 6.2.4. The FPC&C system interconnects to non-essential systems and components which are automatically isolated by isolation valves when a containment isolation signal is received. In addition, the F/D bypass valve are fully opened.

The residual heat removal system cooling mode and the shutdown service water make-up water mode are controlled by opening and closing normally closed valves.

7.6.1.9.5 Bypasses and Interlocks

The FPC&C system has no bypasses.

Interlocks are provided for pump suction pressure, suction valve position and containment isolation signals as described in Subsection 7.6.1.9.4.2.

The cooling medium for the FPC&C heat exchangers and pump motors is normally provided by the component cooling water system (CCWS). Under abnormal plant operations, the shutdown service water system (SSWS) can be aligned to supply the required service water.

The heat exchanger service water piping is provided with two inlet and two outlet valves. The CCWS inlet and outlet valves are normally open and the SSWS inlet and outlet valves are normally closed.

To transfer the heating load from the CCWS to the SSWS, both CCWS valves must be fully closed by operator action in the main control room. With both valves closed, the operator may then open the SSWS inlet and outlet valves.

7.6.1.9.6 Redundancy and Diversity

FPC&C system redundancy is provided for by the use of two 100% capacity cooling subsystems. Each cooling subsystem is electrically and physically separated from the other. The F/D subsystem, although not essential, is provided with four F/D Vessels, one of which is normally sufficient.

7.6.1.9.7 Testability

The operation of each FPC&C subsystem can be tested during normal plant operation. All instrumentation is external to the drywell and can be calibrated and verified for correct operation during normal plant operation. Instrument set points are tested by simulated signals of sufficient magnitude to verify the set point alarm or trip or both.

7.6.1.9.8 Environmental Consideration

All essential components are qualified to perform the required safety function for all design conditions in the plant environment where they are located. Devices requiring periodic calibration or maintenance are located in accessible areas.

7.6.1.9.9 Operational Considerations

7.6.1.9.9.1 Normal Operations

The FPC&C system is capable of several modes of operation. The modes of operations are established by the operator based on the following considerations.

(1) Number of spent fuel assemblies in storage and their location.

(2) Quality level of the pool water.

The operator regulates the FPC&C water distribution by manual adjustment of the pool diffuser control valves. A sufficient amount of cooling water is directed around spent fuel assemblies.

Operation of the F/D is based on laboratory analysis of samples obtained with the process sampling system (Subsection 9.3.2), and analysis instrumentation within the F/D subsystem.

The normal operational mode of the FPC&C system is as follows:

(1) One FPC&C pump operating.

(2) FPC&C filter/demineralizer train processing about 25% of the system flow.

(3) One FPC&C heat exchanger operating with cooling water provided by the component cooling water system.

(4) Water distributed to the spent fuel storage pool and to the reactor vessel pool.

(5) No water discharged into fuel cask, fuel transfer, steam separator storage, steam dryer storage, and the containment transfer pools.

Variations to this mode are expected and permitted as long as the basic functional requirements of the FPC&C system are achieved.

Proper system operation is verified by periodically checking pump suction pressure, pump discharge pressure, heat exchanger outlet temperature, pool water temperature, pool water levels, and pool water quality levels.

7.6.1.9.9.2 Infrequent Operations

(1) Residual Heat Removal System Cooling

The residual heat removal system can serve as an alternate pump and heat exchanger. The Division 1 RHR pump and heat exchanger would be connected to the FPC&C system by manually opening or closing applicable system isolation valves. The residual heat removal system will not be connected to the FPC&C system unless the reactor is in the refueling mode or cold shutdown mode and the fuel pool water temperature would otherwise rise above 150° F.

(2) Shutdown Service Water System Cooling

If necessary the shutdown service water system can provide cooling of the FPC&C heat exchangers and pump motors under loss of offsite power conditions. Transfer of secondary cooling water is by operator action. The normal source of cooling water is the component cooling water system.

(3) Shutdown Service Water System Makeup

The shutdown service water system can provide make-up water to the spent fuel storage pool. Shutdown service water is lake water and is not of the same water quality as the pool water. Therefore shutdown service water is not used as makeup water unless the spent fuel assemblies are in danger of becoming uncovered and no other source of makeup water is available.

7.6.1.10 Containment Atmosphere Monitoring System - Instrumentation and Controls

7.6.1.10.1 System Identification

In this subsection, the instrumentation and controls associated with the safety-related containment atmosphere monitoring (CAM) system are discussed. The CAM system consists of two redundant divisions which are physically and electrically independent. Each division provides the capability of monitoring and indicating normal operating and postaccident hydrogen/oxygen concentrations and high-range gamma radiation levels in the drywell and containment. Each divisional high-range gamma radiation monitoring subsystem consists of an electronic radiation detector and read-out monitor. Each divisional H_2/O_2 monitoring subsystem is an extraction type system consisting of a local panel, designated the Analysis and Sample Conditioning Module (ASCM) and a main control room panel, designated the Electronic Control Module (ECM).

The CAM system panels are designed Class 1E, Seismic Category I. The H_2/O_2 monitoring subsystem piping from sample point to panels is Quality Groups B and C. The piping, valves, pump, and remaining equipment in the H_2/O_2 monitoring subsystem local panels are Quality Group D.

The CAM system is shown in Drawing M05-1034.

7.6.1.10.2 Power Sources

The Class 1E electrical system supplies 120 Vac power to the CAM system control room instrumentation panels. The local ASCM panels for the hydrogen/oxygen channels are powered from 120-volt and 480-volt, 3-phase divisional buses. CAM system Division 1 is powered from the Division 1 bus, and CAM system Division 2 from the Division 2 bus.

The H_2/O_2 monitoring subsystem heat tracing for each division is energized from the same Class 1E electrical system that supplies 120-Vac power to the respective divisional H_2/O_2 monitoring subsystem main control room panels. The SGTS and HVAC exhaust high range radiation monitoring system heat tracing, as described in Subsections 7.6.1.2.6.3.1 and 7.6.1.2.7.3.1 respectively, is powered from the Division 1 H_2/O_2 monitoring subsystem main control room panel only. A separate Class 1E 120-Vac electrical power source is provided at the Division 1 panel for the exclusive purpose of energizing this heat tracing system.

7.6.1.10.3 Initiating Circuits

Each division of the high-range gamma radiation monitoring subsystem is energized during normal plant operation and after an accident until the power is turned off by an operator.

Both Divisional H_2/O_2 monitoring subsystem panels and heat tracing are energized during normal plant operation and after an accident. The pump operates only when a sample is taken. The system power may be turned off by an operator. Each divisional H_2/O_2 monitoring subsystem extracts a sample sequentially from the zones in the drywell (minimum of two) and two zones in containment. Once per day at a preprogrammed time during normal plant operation, a microprocessor in each ECM panel initiates a containment/drywell H_2/O_2 atmosphere check. The microprocessor opens sequentially a sample valve located in each zone. The pump automatically starts, and the sample is drawn from the zone for approximately three minutes to ensure purging of the equipment. The sample gas is returned to containment. After each zone has been analyzed, the microprocessor stops the pumps.

During normal plant operation, the heat tracing is maintained at a temperature greater than 250° F and the ovens located in the ASCM panels are maintained at 200° F to prevent sample condensation.

During normal plant operation, the containment isolation valves are open. Upon a containment isolation signal (high drywell pressure or reactor pressure vessel level 2), the containment isolation valves close. Prior to reopening the containment isolation valves, the operator warms the ovens by placing the accident/normal switch, located on each ECM panel, to the accident mode to allow the ovens to attain a temperature of 265°F. The ovens take less than 30 minutes to reach this temperature. The system can, therefore, be placed in operation within thirty minutes of the accident. Alarm lights clear on the ECM panel when the ovens have reached the desired operating temperature. To enable opening of the containment isolation valves, a key-operated bypass switch, provided for each division, must be placed in the BYPASS position. The Division 1 bypass switch is located on Panel 1H13-P638 and the Division 2 bypass switch is located on Panel 1H13-P639. The isolation valves are manually opened, and an auto/on switch on the ECM panel is moved to “On”. The system is then operating and takes samples sequentially. The operator can reprogram the microprocessor to monitor a zone continuously or start/stop the subsystem as desired.

Sample zone areas monitored for hydrogen and oxygen are shown in Drawing M05-1034.

7.6.1.10.4 Logic and Sequencing

No logic or sequencing is performed by the high-range gamma radiation monitoring subsystem. The H_2/O_2 monitoring system microprocessor provides the outputs to open the sample valves sequentially.

7.6.1.10.5 Bypasses and Interlocks

The high-range gamma radiation monitoring subsystem has no by-passes or interlocks. A key-operated bypass switch is provided for each divisional H_2/O_2 monitoring subsystem to allow the operator to open the containment isolation valves after an accident. No interlocks are provided between the H_2/O_2 monitoring subsystem and the containment isolation signals.

7.6.1.10.6 Redundancy and Diversity

The CAM system divisions are independent and redundant.

7.6.1.10.7 Actuated Devices

The CAM system provides indication, recording, and alarms in the main control room. Output signals from the CAM system do not interface with any other control systems.

7.6.1.10.8 Separation

The two CAM system divisions are electrically and physically separated so that no single design basis event is capable of damaging equipment in more than one division. No single failure or test, calibration, or maintenance operation can prevent function of more than one division.

7.6.1.10.9 Testability

Each CAM system division is testable during plant operation to determine the operational availability of the system's components. The system has the capability for test, calibration, and adjustment of the electronics in each channel.

Each channel of the high-range gamma radiation monitoring subsystem is checked automatically every 17 minutes by an electronic ramp signal to ensure the integrity of each detector/cable/readout hardware. A test button on each readout indicator is provided to cause full-scale deflection to test setpoints and to check status lights.

Each H_2/O_2 monitoring subsystem is provided with a calibration gas to check the hydrogen/oxygen sensors during normal plant operation and after an accident. The calibration is automatically checked prior to taking any samples during normal operation or after an accident. The operator may also check the calibration as desired.

7.6.1.10.10 Environmental Consideration

The CAM system local equipment is designed to be operable during normal and postaccident environments. Control and indicating equipment is located in the main control room and is designed for the environment.

The H_2/O_2 monitoring subsystem heat tracing and thermocouples used in conjunction with the temperature control are environmentally qualified in accordance with IEEE-323 and seismically qualified in accordance with IEEE-344.

7.6.1.10.11 Operational Considerations

7.6.1.10.11.1 General Information

The CAM system design additionally has the following features:

a. The ASCM panels are located in the fuel handling building within 15 feet of the containment isolation valves to minimize personnel radiation exposure.

b. The Division 1 H_2/O_2 monitoring subsystem inboard and outboard isolation valves are powered from a Division 1 bus. Division 2 H_2/O_2 monitoring subsystem inboard and outboard isolation valves are powered from a Division 2 bus.

c. The containment isolation valves have provisions to check leak rates.

d. The divisional ECM panels are located in the back row behind the main operating panel.

e. The high-range gamma radiation indicators and the H_2/O_2 monitoring subsystem containment isolation valve bypass switches are located on Panels 1H13-P638 and 1H13-P639 behind the main operating panels in the main control room.

f. Each ASCM panel sample pump is provided with a recirculation line to protect the sample pumps if isolation valves are closed.

g. Each ASCM panel is provided with a Class 1E qualified air compressor to supply instrument air for air-actuated devices in the panel.

h. Containment penetrations, all sample tubing, and associated sample valves are designed to safety-related, Seismic Category I and ASME Section III, Class B requirements.

i. The individual H_2/O_2 monitoring subsystem heat tracing circuits for each division are controlled by temperature controllers located in the respective divisional H_2/O_2 monitoring subsystem main control room panel. Each temperature controller has status lights which indicate a high or low heat tracing circuit temperature (deviation from setpoint). In addition, the heat tracing circuits external to the ASCM are each furnished with low current monitors. Degradation of the heat tracing circuits is monitored by this device by detecting decreasing circuit current. Normal and failure status lights on the main control room panel are energized by the current monitors.

j. The SGTS and HVAC exhaust high range radiation monitoring system heat tracing circuits are controlled by temperature controllers located in the Division 1 H_2/O_2 monitoring subsystem main control room panel only. These controllers are provided with similar type of alarms as described in Subsection 7.6.1.10.11.1(i), except that low current monitors are not provided. A separate indicating light on the Division 1 H_2/O_2 monitoring subsystem main control room panel provides trouble indication related to this heat tracing system.

7.6.1.10.11.2 Reactor Operator Information

The following information is available to the reactor operator:

a. Each high-range gamma radiation channel consists of a readout indicator and isolator. The readout indicators/isolators for the Division 1 System are located on Panel 1H13-P638, and for the Division 2 System are located on Panel 1H13-P639. Each channel has an indicator with a range of 1 to 10^7 R/hr. Each channel has alarm outputs for the following conditions:

1. High Gamma Radiation Level,

2. Alert Gamma Radiation Level, and

3. System Failure.

Each divisional system is provided with a high gamma radiation monitoring system trouble annunciator located on the main control room front panel. High and Alert alarm setpoints are set at the maximum value, and alarm output contacts are connected in parallel with system failure output contacts to activate the system trouble annunciator. When a lamp is illuminated, the operator must check the cause of the alarm by reviewing the status lights on the associated backrow panel. The Division 1 and the Division 2 radiation signals are inputted to the computer and are indicated in the main control room.

Each radiation channel has an accuracy of ±36%. Detectors respond to gamma radiation photons with an energy range from 0.1 MeV to 3 MeV. The response of

the containment high range gamma monitors is linear to within ±20% over the above range. The response of the drywell monitors, which are located within thin-walled penetration sleeves, however, is linear to within ±29% over the above range (linear to within ±20% over the range the range of 0.12 MeV to 3 MeV). Further, the penetration sleeve attenuates gammas, of low energies in particular, causing an underresponse by the monitors. In order to account for this effect a correction factor has been calculated for use with the response. The correction factor depends upon the energy spectrum of airborne radioactivity in the drywell, which changes with time due to different decay rates of different nuclides. Therefore, a time dependent graphical correction factor is determined with time zero corresponding to the reactor shutdown from full power. The correction factor is applied to the monitor response, per plant procedures, to correct for the underresponse.

b. Each H_2/O_2 monitoring subsystem ECM panel has a nonqualified printer. The printer records the time, the zone, and the oxygen and hydrogen content of the sample on a wet basis.

Each ECM panel has a Class 1E qualified hydrogen/oxygen indicator with a range of 0 to 30% by volume. The accuracy of the hydrogen/oxygen indicator is ±1% volume.

Each ECM panel is provided with status indicating lights for sample zone valves, sample pump and air compressor. Any alarms associated with the H_2/O_2 analyzers are typed on the printer. The H_2/O_2 analyzers have the following alarms:

1. High Hydrogen Concentration,

2. High Oxygen Concentration,

3. Multiple Sample Valves Open Simultaneously, and

4. Calibration Normal.

The following alarms, which are not typed on the printer, have Class 1E status indicating lights located on each ECM panel:

1. Oven Temperature Abnormal,

2. Sample Pressure Abnormal,

3. Air Pressure Low,

4. H_2/O_2 Monitoring Subsystem Heat Tracing Current Low/Temperature Abnormal,

5. Sample Flow Low, and

6. SGTS and HVAC Exhaust High Range Radiation Monitoring System Heat Tracing Temperature Abnormal (Division 1 ECM Panel Only).

Each divisional ECM has one dedicated main control room front panel annunciator window. When the annunciator window lamp is illuminated, the operator reviews the corresponding status lights or the printer to determine the cause of the alarm.

A separate main control room front panel annunciator window is dedicated to the SGTS and HVAC exhaust high range radiation monitoring system heat tracing alarms.

When the annunciator window lamp is illuminated, the operator reviews the corresponding status lights dedicated to this heat tracing system on the Division 1 ECM panel to determine the cause of the alarm.

7.6.1.10.11.3 Setpoints

There are no safety-related switches which actuate safety-related equipment.

7.6.1.11 Safety Relief Valve Monitoring (SRVM) System Instrumentation

7.6.1.11.1 System Identification

The purpose of the SRVM system instrumentation is to provide a positive indication in the main control room. When safety relief valves are not fully closed, the system initiates alarms in the main control room to alert the operators of this condition.

7.6.1.11.2 Power Source

All system equipment is powered from the Division 1, 120-Vac instrument bus. There is no redundancy requirement for the SRVM system.

7.6.1.11.3 Equipment Design

7.6.1.11.3.1 Circuit Description

Each main steam safety relief valve is monitored by one channel of a sixteen channel vibration monitoring system. An accelerometer, which is used as a vibration sensor, is located on the safety relief valve discharge piping near each safety relief valve.

The accelerometer output is filtered and conditioned by a preamplifier and the resulting signal is connected to flow and alarm modules located in the main control room. Each indicator located on the flow module is an LED bar graph display. The LED segments are successively illuminated as the valve position, based on relative vibration (flow), increases to the setting of the activation level of the LED's.

Each ganged alarm module provides outputs to a common annunciator window. Each vibration alarm module provides individual status to the plant computer which are activated by a "not closed" valve position indication from the flow module.

7.6.1.11.3.2 Logic and Sequencing

Alarm output signals from the SRVM system activate the main control room annunciator and input to the plant computer which alerts the operator to a "not closed" condition for each safety relief valve.

7.6.1.11.3.3 Bypasses and Interlocks

Each alarm module contains an alarm inhibiting switch. When this switch is activated, logic signals are prevented from actuating the alarm circuitry and all front row indication to the operator is disabled. There are not interlocks with any other system controls.

7.6.1.11.3.4 Redundancy and Diversity

One vibration channel is provided to monitor each safety relief valve; there are no redundancy provision for the individual valve monitoring channels. Each channel circuit is electrically independent of all other channels from the sensors to the valve position indicator unit. All channels have a common power supply. Diversity is provided by the leak detection system which utilizes thermocouples in each of the SRV discharge lines as discussed in Subsection 7.7.1.1.3.1.6.

7.6.1.11.3.5 Actuated Devices

The SRVM system actuates only indicators, annunciators, and the plant computer, all of which are located in the main control room.

7.6.1.11.3.6 Separation

Division 1 is the only electrical separation division for the SRVM system instrumentation. All interconnecting electrical cables are routed in Division 1 trays and conduit.

7.6.1.11.3.7 Testability

The SRVM system is testable during plant operation to determine the operational availability of the system components. The acoustical monitors for each channel can be tested and adjusted during normal plant operation and under postaccident conditions. The testing and adjustment of each monitor is initiated and controlled from the main control room panel. Under normal operating conditions the relief valves may be sequentially opened to allow the valve monitoring channels to be accurately calibrated; however, an alternate is to determine the setpoint from the ratio of the sensor valve coupling safety factor to the product of the channel component sensitivities. Since this results in a conservative setting it may be necessary during plant operation to reduce gain in order to eliminate crosstalk.

A test switch is provided in each vibration channel for the purpose of testing the alarm module. Depressing this test switch actuates the alarm circuitry to test the GETAR contacts/computer inputs. Also, a test switch is provided on each ganged alarm module to test the annunciator circuitry. Testing a channel does not interfere with the function of any other channel.

7.6.1.11.4 Environmental Considerations

SRVM system components are designed and tested to operate in normal and postaccident environments where the equipment is located. Devices requiring periodic calibration or maintenance are located in accessible areas.

7.6.1.11.5 Operational Considerations

7.6.1.11.5.1 Reactor Operator Information

The operator is kept aware of the status of the safety relief valves through indicators on the back row panels and computer displays/annunciators located on the front row panels in the main control room. This indication system is supplemental to the SRV solenoid indicating lights associated with the relief valve control switches, also located in the main control room on the front row panels. If the alarm circuitry is activated, the condition is continuously annunciated throughout the main control room. The accoustic monitoring system is an indication-only system and is not required to support operability of the safety relief valves.

7.6.1.11.5.2 Setpoints

Setpoints are established based on either valve full open, or a conservative calculation adjusted for background noise.

7.6.2 Analysis

7.6.2.1 Refueling Interlocks System - Instrumentation and Controls

7.6.2.1.1 General Functional Requirements Conformance

The refueling interlocks, in combination with core nuclear design and refueling procedures, limit the probability of an inadvertent criticality. The nuclear characteristics of the core assure that the reactor is subcritical even when the highest worth control rod is fully withdrawn. Refueling procedures are written to avoid situations in which inadvertent criticality is possible. The combinations of refueling interlocks for control rods and the refueling platform provides redundant methods of preventing inadvertent criticality even after procedural violations. The interlocks on hoists provide yet another method of avoiding inadvertent criticality.

Table 7.6-1 illustrates the effectiveness of the refueling interlocks. This table considers various operational situations involving rod movement, hoist load conditions, refueling platform movement and position, and mode switch manipulation. The initial condition in Situation 4 appears to contradict the action of refueling interlocks, because the initial conditions indicate that more than one control rod is withdrawn, yet the mode switch is in REFUEL. Such initial conditions are possible if the rods are withdrawn when the mode switch is in STARTUP, and then the mode switch is turned to REFUEL. In all cases, correct operation of the refueling interlock will prevent either the operation of loaded refueling equipment over the core when any control rod is withdrawn or the withdrawal of any control rod when fuel-loaded refueling equipment is operating over the core. In addition, when the mode switch is in REFUEL, only one rod can be withdrawn; selection of a second rod initiates a rod block.

7.6.2.1.2 Specific Regulatory Requirement Conformance

Refueling interlocks associated with the reactor mode switch being in the REFUEL position will be qualified to meet IEEE 344. Refueling interlocks associated with the refueling platform and hoists need not be qualified since no electrical failure or combination of failures can result in a situation resulting in a significant release of radioactive materials.

There are no specific General Design Criteria requirements for this system.

7.6.2.2 Process Radiation Monitoring System Instrumentation and Controls

7.6.2.2.1 Main Steam Line Radiation Monitoring Subsystem

The analysis for the Main Steam Line Radiation Monitoring subsystem is discussed in Subsection 7.6.1.2.1.12.

7.6.2.2.2 Containment Fuel Transfer Pool Vent Plenum Radiation Monitoring Subsystem

7.6.2.2.2.1 Conformance to General Functional Requirement

The physical location and monitoring characteristics of the containment fuel transfer pool vent plenum radiation monitoring channels are adequate to detect abnormal amounts of radioactivity in the containment fuel transfer pool vent plenum. The redundancy and arrangement of channels ensure that no single failure can prevent the initiation of isolation when required. One out of two twice high radiation trips shall:

(1) shut down containment and fuel building ventilation systems and close the containment vent system isolation valves,

(2) initiate closure of normal purge and exhaust paths for these buildings,

(3) initiate the standby gas treatment system (SGTS) trains.

7.6.2.2.2.2 Conformance to Specific Regulatory Requirements

7.6.2.2.2.2.1 Regulatory Guides Conformance

7.6.2.2.2.2.1.1 Regulatory Guide 1.22

The subsystem conforms to Regulatory Guide 1.22 in that provisions which allow periodic testing of individual channels have been included.

7.6.2.2.2.2.1.2 Regulatory Guide 1.75

Optical isolators provide electrical isolation between each safety-related monitor and the non-safety-related portions of the radiation monitoring system.

7.6.2.2.2.2.1.3 Regulatory Guide 1.53

See Subsection 7.6.2.2.2.3.1 for conformance to application of single failure criterion.

7.6.2.2.2.2.1.4 Regulatory Guide 1.89

See Subsection 7.6.2.2.2.3.2 for Class 1E qualification conformance.

7.6.2.2.2.2.1.5 Regulatory Guide 1.100

See Subsection 7.6.2.2.2.3.4 for seismic qualification conformance.

7.6.2.2.2.2.1.6 Regulatory Guide 1.105

See Subsection 7.1.2.6.25 for conformance.

7.6.2.2.2.2.1.7 Regulatory Guide 1.118

See Subsection 7.6.2.2.2.3.3 for periodic testing conformance.

7.6.2.2.2.2.2 Conformance to 10 CFR 50 Appendix A

Criterion 1-5 -- See Subsection 7.1.2.7.

Criterion 13 -- The subsystem conforms to Criterion 13 in that the instruments employed more than adequately cover the anticipated range of radiation under normal operating conditions with sufficient margin to include postulated accident conditions.

Criterion 20 -- The subsystem conforms to criterion 20 in that the exhaust plenum is continuously monitored and the required protection action is automatically initiated when the setpoint is exceeded.

Criterion 21 -- The subsystem conforms to criterion 21 in that redundant instrument channels and circuits are provided. No single failure or operator action can prevent their protective function. The instrument channels and logic can be tested during plant operation to assure its operation and availability.

Criterion 22 -- The subsystem conforms to criterion 22 in that the affects of natural phenomena and normal operation (including testing) will not result in the loss of the protection function.

Criterion 23 -- The subsystem conforms to criterion 23 in that the trip circuits associated with each channel have been designed to specifically "fail-safe" in the event of loss of power.

Criterion 24 -- The subsystem conforms to criterion 24 in that the system has no control function.

Criterion 29 -- No anticipated operational occurrence will prevent this equipment from performing its safety function.

Criterion 60 -- See Subsection 11.5.4.

Criterion 63 -- See Subsection 11.5.4.

Criterion 64 -- Continuous radiation monitoring is provided for this discharge path under all reactor conditions.

7.6.2.2.2.3 Conformance to Industry Standards

7.6.2.2.2.3.1 IEEE 279

7.6.2.2.2.3.1.1 General Function Requirement (IEEE-279 Par. 4.1)

Refer to Conformance to General Functional Requirements for this subsystem.

7.6.2.2.2.3.1.2 Single Failure Criterion (IEEE-279 Par. 4.2)

This criterion is met since there are two independent pairs of channels which initiate redundant equipment. One failure effects only one pair of channels.

7.6.2.2.2.3.1.3 Quality of Components and Modules (IEEE-279 Par. 4.3)

Components used in the Containment Fuel Transfer Pool Vent Plenum Radiation Monitoring Subsystem have been carefully selected on the basis of suitability for the specific application. The logic relays have been selected with conservatism to ensure against significant deterioration during anticipated duty over the lifetime of the plant.

A quality assurance program is required to be implemented and documented by equipment vendors with the intent of complying with the requirements set forth in 10 CFR 50, Appendix B.

7.6.2.2.2.3.1.4 Equipment Qualification (IEEE-279 Par. 4.4)

The equipment is specified to include qualifications of hardware to cover the full range of the expected environment under all operating, abnormal occurrences, and accident conditions.

7.6.2.2.2.3.1.5 Channel Integrity (IEEE-279 Par. 4.5)

The channel components have been designed to be operable under design-basis conditions.

The trip channel components have been selected to fulfill these minimum requirements.

7.6.2.2.2.3.1.6 Channel Independence (IEEE-279 Par. 4.6)

The Division 1 and Division 2 channels of this protective function are electrically isolated and physically separated in order to meet this design requirement.

7.6.2.2.2.3.1.7 Control and Protection System Interaction (IEEE-279 Par. 4.7)

The four monitors for this function have no control function.

7.6.2.2.2.3.1.8 Derivation of System Inputs (IEEE-279 Par. 4.8)

The measurement of radiation at the specified location is direct measurement of the variable to determine radioactive releases.

7.6.2.2.2.3.1.9 Capability for Sensor Checks (IEEE-279 Par. 4.9)

The sensors which are used for input to the Containment Fuel Transfer Pool Vent Plenum Radiation Monitoring Subsystem can be checked one at a time by application of simulated signals during normal plant operation.

7.6.2.2.2.3.1.10 Capability for Test and Calibration (IEEE-279 Par. 4.10)

Provisions are incorporated to provide capability of testing the monitors for functional checks and to calibrate the monitors over the full range during plant operation.

7.6.2.2.2.3.1.11 Channel Bypass or Removal from Operation (IEEE-279 Par. 4.11)

During the periodic test of any given channel, the controls associated with a monitor permit the monitor to be tested for proper operation and the 1-out-of-2 twice trip system logic prevents system level action due to testing but maintains the action when required.

7.6.2.2.2.3.1.12 Operating Bypasses (IEEE-279 Par. 4.12)

This design requirement is not applicable to this function.

7.6.2.2.2.3.1.13 Indication of Bypasses (IEEE-279 Par. 4.13)

Not applicable to this function.

7.6.2.2.2.3.1.14 Access to Means for Bypassing (IEEE-279 Par. 4.14)

This design requirement is not applicable to this function.

7.6.2.2.2.3.1.15 Multiple Setpoints (IEEE-279 Par. 4.15)

This design requirement does not apply to this protective function.

7.6.2.2.2.3.1.16 Completion of Protective Action Once it is Initiated (IEEE-279 Par. 4.16)

The monitor output trip circuits are latching type and must be manual reset.

7.6.2.2.2.3.1.17 Manual Actuation (IEEE-279 Par. 4.17)

Not applicable to this function.

7.6.2.2.2.3.1.18 Access to Setpoint Adjustments, Calibration, and Test Points (IEEE-279 Par. 4.18)

Access is under the administrative control of station personnel.

7.6.2.2.2.3.1.19 Identification of Protective Actions (IEEE-279 Par. 4.19)

Actuation of any radiation monitor to produce a tripped condition will initiate a main control room annunciator for this protective function.

7.6.2.2.2.3.1.20 Information Readout (IEEE-279 Par. 4.20)

See Subsection 7.7.1.9.

7.6.2.2.2.3.1.21 System Repair (IEEE-279 Par. 4.21)

The one-to-one relationship of detector, processor, and trip circuitry permits the operator to identify the faulty channel and determine the defective component.

Provisions have been made to facilitate repair of the channel components during station operation.

7.6.2.2.2.3.1.22 Identification (IEEE-279 Par. 4.22)

Color coded nameplates are provided to identify each instrument.

7.6.2.2.2.3.2 IEEE 323

Qualification of components of this subsystem is in compliance with the requirements of IEEE 323.

7.6.2.2.2.3.3 IEEE 338

This subsystem is testable during reactor operation as described under the IEEE 279 conformance description above Paragraphs 4.9, 4.10, 4.11, 4.13, and 4.14.

7.6.2.2.2.3.4 IEEE 344

Seismic qualification of the components of the subsystem is in compliance with the requirements of IEEE 344.

7.6.2.2.2.3.5 IEEE 379

This subsystem meets the single-failure criterion as described under the IEEE 279 conformance description above, Paragraph 4.2.

7.6.2.2.2.3.6 IEEE 384

Optical isolators are provided between the safety and non-safety-related portions of the radiation monitoring system. Optical isolators furnished for safety related radiation monitors are safety-related (Class 1E Seismic Category 1). The safety function performed by the isolators is to maintain complete electrical and physical separation of the safety and non-safety-related circuits as defined in IEEE 384 and Regulatory Guide 1.75. The capability of the isolators to perform this safety function while subjected to their design-basis events is demonstrated and documented.

7.6.2.2.3 Containment Building Exhaust Duct Radiation Monitoring Subsystem

7.6.2.2.3.1 General Functional Requirement Conformance

The physical location and monitoring characteristics of the containment building exhaust duct radiation monitoring channels are adequate to detect abnormal levels of radioactivity in the containment building ventilation exhaust. The redundancy and arrangement of channels ensure that no single failure can prevent initiation of action when required. One out of two twice high radiation trips shall:

(1) shut down the containment and fuel building ventilation system;

(2) initiate closure of normal purge and exhaust paths for these buildings;

(3) initiate the SGTS trains.

7.6.2.2.3.2 Conformance to Specific Regulatory Requirements

Conformance to specific regulatory requirements is as described in Subsection 7.6.2.2.2.2.

7.6.2.2.3.3 Conformance to Industry Standards

See Subsection 7.6.2.2.2.3.

7.6.2.2.4 Fuel Building Ventilation Exhaust Radiation Monitoring Subsystem

7.6.2.2.4.1 General Functional Requirement Conformance

The physical location and monitoring characteristics of the fuel building ventilation exhaust radiation monitoring channels are adequate to detect abnormal amounts of radioactivity in the fuel building ventilation exhaust. The redundancy and arrangement of channels ensure that no single failure can prevent initiation of isolation when required. One out of two twice high radiation trips shall:

(1) shut down and isolate the fuel building ventilation system, and

(2) initiate the SGTS train.

7.6.2.2.4.2 Conformance to Specific Regulatory Requirements

Conformance to specific regulatory requirements is as described in Subsection 7.6.2.2.2.2.

7.6.2.2.4.3 Conformance to Industry Standards

See Subsection 7.6.2.2.2.3.

7.6.2.2.5 Control Room Air Intakes Radiation Monitoring Subsystem

7.6.2.2.5.1 General Functional Requirement Conformance

The physical location and monitoring characteristics of the main control room air intakes radiation monitoring channels are adequate to detect abnormal amounts of radioactivity at the air intakes. The redundancy and arrangement of channels ensure that no single failure can prevent initiation of the appropriate actions when required. Radiation in excess of preset limits on any one of the four monitors actuates a control room annunciator. Excess radiation at both monitors in one division or both monitors in one air intake initiates the required protective action as described in Subsection 9.4.1.5.

7.6.2.2.5.2 Conformance to Specific Regulatory Requirements

Conformance to specific regulatory requirements is as described in Subsection 7.6.2.2.2.2.

7.6.2.2.5.3 Conformance to Industry Standards

See Subsection 7.6.2.2.2.3.

7.6.2.3 High Pressure/Low Pressure Interlock Protection and Control System

7.6.2.3.1 General Functional Requirements Conformance

The high pressure/low pressure interlocks provide an interface between low pressure systems and reactor pressure. When reactor pressure is low enough as to not be harmful to the low pressure systems, the valves open exposing the low pressure system to reactor pressure. The interlocks are automatic and the operator is given indication of their status.

7.6.2.3.2 Specific Regulatory Requirements Conformance

7.6.2.3.2.1 General Design Criteria Conformance

No General Design Criteria apply to the high pressure/low pressure interlocks.

7.6.2.3.2.2 IEEE Standards Conformance

7.6.2.3.2.2.1 Conformance to IEEE 279

The interlocks are designed in accordance with the single failure criterion, redundancy requirements, and testability criterion.

7.6.2.3.2.2.2 Conformance to IEEE 336

The IEEE 336 requirements for installation, inspection, and testing of Class 1E instrument and control equipment and systems during construction have been met through a quality assurance program. Conformance to IEEE 336-1971 (ANSI N45.2.4-1972) is discussed in conjunction with Regulatory Guide 1.30. Refer to USAR Section 1.8.

7.6.2.3.2.2.3 Conformance to IEEE 338

The design of the interlocks is such that they can be tested during reactor operation except for the actuated devices (valves). The valves can be tested during startup and shutdown.

7.6.2.3.2.2.4 Conformance to IEEE 379

The single failure criterion is not met in the design of the high pressure/low pressure interlocks for a specific pipeline. Rather, the single failure criterion is met in the design of the engineered safety features. For the low pressure core cooling function, redundant systems are provided which meet the single failure criterion. These systems are LPCI loop A and LPCS versus LPCI loop B and LPCI loop C.

7.6.2.3.2.3 Regulatory Guide Conformance

Regulatory Guide 1.22

See Subsection 7.6.2.3.2.2.3 on conformance to IEEE Standard 338.

Regulatory Guide 1.53

See Subsection 7.6.2.3.2.2.4 on conformance to IEEE Standard 379.

Regulatory Guide 1.68

Conformance to this regulatory guide is discussed in Chapter 14.

Regulatory Guide 1.75

The sensors and instrument and control panels that are part of the high pressure/low pressure interlock feature are separated and identified in accordance with the Regulatory Guide.

7.6.2.4 Leak Detection System (Safety-Related)-Instrumentation and Controls

7.6.2.4.1 General Functional Requirement Conformance

The part of leak detection system instrumentation and controls that is related to the various subsystem isolation circuitry is designed to meet requirements of the containment and reactor vessel isolation control systems cited in Subsection 7.3.2.2.

7.6.2.4.2 Specific Regulatory Requirements Conformance

7.6.2.4.2.1 Regulatory Guides Conformance

Regulatory Guide 1.22

The portion of the leak detection subsystem that provides outputs to the system isolation logic is designed so that complete periodic testing of the isolation system actuation function is provided. This is accomplished by tripping the leak detection system one channel at a time from the leak detection panel in the main control room. An indicator lamp is provided to show that the particular channel is tripped.

Regulatory Guide 1.29

See Subsection 7.1.2.6.6 for degree of conformance.

Regulatory Guide 1.30

See Subsection 7.1.2.6.7 for degree of conformance.

Regulatory Guide 1.45

See Subsection 5.2.5.10 for degree of conformance.

Regulatory Guide 1.47

The leak detection system indicates all bypass conditions.

Regulatory Guide 1.53

The portions of the leak detection system that provide outputs to system isolation logic comply with this guide. Discussion is provided in paragraph 7.3.2.2.2.1.6 under Regulatory Guide 1.53.

Regulatory Guide 1.70

See Subsection 7.1.2.6.17 for degree of conformance.

Regulatory Guide 1.75

Discussion of compliance with the R.G. is provided in Subsection 7.1.2.6.19.

Regulatory Guide 1.89

Discussion of compliance with the R.G. is provided in Section 3.11.

Regulatory Guide 1.97

Discussion of compliance with the regulatory guide is provided in Subsection 7.1.2.6.23.

Regulatory Guide 1.100

See Section 3.10 for discussion of conformance.

Regulatory Guide 1.105

Discussion of compliance with the regulatory guide is provided in Subsection 7.1.2.6.25.

Regulatory Guide 1.118

Discussion of compliance with the regulatory guide is provided in Subsection 7.1.2.6.26.

7.6.2.4.2.2 Regulation Conformance to 10 CFR 50 Appendix A

Criterion 1

The Leak Detection System has been designed, fabricated, erected and tested in accordance to the codes and standards identified in Table 7.1-3. These codes and standards are commensurate with the importance of the safety function of the Leak Detection System.

Criterion 2

The design bases for protection against natural phenomena is discussed in Chapter 3.0.

Criterion 3

The design bases for protection against fire is discussed in Chapter 3.0.

Criterion 4

The criteria for protection against environmental affects and missiles is described in Chapter 3.0.

Criterion 10

The Leak Detection System has been designed with appropriate margin to monitor leakage from the RCPB.

Criterion 13

The leak detection sensors and associated electronics are designed to monitor the reactor coolant leakage over all expected ranges required for the safety of the plant.

Automatic initiation of the system isolation action, reliability, testability, independence, and separation have been factored into leak detection design as required for isolation systems.

Criterion 19

Controls and instrumentation are provided in the main control room.

Criterion 20

Leak detection equipment senses accident conditions and automatically initiates the containment and reactor vessel isolation control system when appropriate.

Criterion 21

Protection related equipment is arranged in two redundant divisions and maintained separately. Testing is covered in the conformance discussion for Regulatory Guide 1.22.

Criterion 22

Protection related equipment is arranged in two redundant divisions so that no single failure can prevent isolation. Diversity of sensed variables is used.

Criterion 23

Signals provided are such that isolation logic is fail safe.

Criterion 24

The system has no control functions.

Criterion 30

The system provides means for detection and generally locating the source of reactor coolant leakage. This criterion also applies to the sump, drywell, recirculating pump, and ADS leak monitoring equipment.

Criterion 33

The leak detection total leakage limitations are confined to conservative levels far below the coolant makeup capacity of the RCIC system.

Criterion 34

Leak detection is provided for the RHR system.

Criterion 35

ECCS leak detection is provided.

Criterion 54

Leak detection is provided for main steam, RCIC, RHR shutdown cooling and reactor water cleanup lines penetrating the drywell. Sump fill rate monitoring provides leak detection for other pipes penetrating the drywell and containment.

7.6.2.4.2.3 Industry Standards Conformance

IEEE 279 and 379

Leak detection system isolation functions comply with IEEE 279 and 379 and are included in the IEEE 279 and 379 compliance discussions of the containment and reactor vessel isolation control system, Subsections 7.3.2.2.2.3.1 and 7.3.2.2.2.3.8, for which this system provides logic trip signals.

IEEE 323

Conformance to IEEE 323 is discussed in Section 3.11.

IEEE 336

Specifications include requirements for conformance to IEEE 336.

IEEE 338

Leak detection complies with IEEE 338. All active components of the leak detection system associated with the isolation signal can be tested during plant operation.

IEEE 344

Leak detection system compliance is shown in Section 3.10.

IEEE 384

See Subsection 7.1.2.5.9 for degree of conformance.

7.6.2.5 Neutron Monitoring System - Instrumentation and Controls

7.6.2.5.1 Source Range Monitor Subsystem

Refer to Subsection 7.7.2.22.

7.6.2.5.2 Intermediate Range Monitor Subsystem

7.6.2.5.2.1 General Functional Requirements Conformance

The analysis for the RPS trip inputs from the Intermediate Range Monitor Subsystem are discussed in Subsection 7.2.2.

The IRM is the primary source of information as the reactor approaches the power range. Its linear steps (approximately a half decade) and the rod blocking features on both high flux level and low flux level require that all the IRMs are on the correct range as core reactivity is increased by rod withdrawal. The SRM overlaps the IRM. The sensitivity of the IRM is such

that the IRM is on scale on the least sensitive (highest) range with approximately 15% reactor power.

The number and locations of the IRM detectors have been determined to provide sufficient intermediate range neutron flux level information under the worst permitted bypass conditions. To assure that each IRM is on the correct range, a rod block is initiated any time the IRM is both downscale and not on the most sensitive (lowest) scale. A rod block is initiated if the IRM detectors are not fully inserted in the core unless the reactor mode switch is in the RUN position. The IRM scram trips and the IRM rod block trips are automatically bypassed when the reactor mode switch is in the RUN position.

The IRM detectors and electronics have been tested under operating conditions and verified to have the operational characteristics described. They provide the level of precision and reliability required by the RPS safety design bases.

7.6.2.5.2.2 Specific Regulatory Requirement Conformance

7.6.2.5.2.2.1 Regulatory Guides Conformance

Regulatory Guide 1.22

The portion of the IRM subsystem that provides outputs to the Reactor Protection System is designed to provide complete periodic testing of Protection System Actuation Function as desired. The provision is accomplished by initiating an output trip of one IRM channel at any given time which will result in tripping one of the four RPS trip systems. Details are provided in Subsection 7.2.2.1.2.3.1 under IEEE 279 Conformance-Neutron Monitoring System Scram Trip.

Operator indication of IRM bypass is provided by indicator lamps.

Regulatory Guide 1.29

All devices and circuitry from sensor to trip output are classified as Seismic Category I.

Regulatory Guide 1.47, 1.53, 1.75, 1.89, 1.100, 1.105, and 1.118.

The IRM complies with these Guides. Discussion is provided in Subsection 7.2.2.1.2.1.

7.6.2.5.2.2.2 Conformance to 10 CFR 50 Appendix A

Criterion 1, 2, 3, 10, and 25

The IRM, as an input to the Reactor Protection System, complies with these criterion as discussed in Subsection 7.2.2.1.2.2.

Criterion 13, 20, 21, 22, 23, 24, and 29

The IRM detectors and associated electronics are designed to monitor the in-core flux over all expected ranges required for safety of the plant.

Automatic initiation of protection system action, reliability, testability, independence, and separation have been factored into the IRM design as required for protection systems.

7.6.2.5.2.2.3 Conformance to Industry Standards

IEEE 279

The IRM design is shown to comply with the design requirements of IEEE-279 in Subsection 7.2.2.1.2.3.1 under IEEE 279 - Neutron Monitoring Scram Trip.

IEEE 323

IRM compliance is shown in Section 7.1.2.5.

IEEE 338

IRM compliance with IEEE 338 is shown in Subsection 7.2.2.1.2.3.1 under IEEE 279 Conformance - Neutron Monitoring Scram Trip. (Paragraph 4.9 and 4.10).

IEEE 344

The IRMs are qualified for seismic events. Compliance is further shown in Section 3.10.

IEEE 379

IRM signal separation, cabinet separation, use of isolation circuitry, and number of channels per trip system are methods used to meet the single-failure criterion. Convenient test and calibration circuits permit frequent checks for undetected failures.

IEEE 384

IRM channels are physically and electrically separated into four groups to provide four sets of inputs to the Reactor Protection System. Further discussion of compliance is contained in Subsection 7.2.2.1.2.3.9.

7.6.2.5.3 Local Power Range Monitor Subsystem

7.6.2.5.3.1 General Functional Requirement Conformance

The LPRM provides detailed information about neutron flux throughout the reactor core. The number of LPRM assemblies and their distribution is determined by extensive calculational and experimental procedures. The division of the LPRM into various groups for ac power supply allows operation with one ac power supply failed or out of service without limiting reactor operation. Individual failed chambers can be bypassed. Neutron flux information for a failed chamber location can be interpolated from nearby chambers. A substitute reading for a failed chamber can be derived from an octant-symmetric chamber, or an actual flux indication can be obtained by inserting a TIP to the failed chamber position. Each output is electrically isolated so that an event (grounding the signal or applying a stray voltage) on the reception end does not destroy the validity of the LPRM signal. Tests and experience attest to the ability of the detector to respond proportionally to the logic neutron flux changes. (Reference 1)

7.6.2.5.3.2 Specific Regulatory Requirement Conformance

7.6.2.5.3.2.1 Conformance to General Design Criteria and Regulatory Guides

The LPRMs provide the inputs to the APRM channels which are integrated together in the Neutron Monitoring System. Conformance is therefore, identical with that of the APRMs as discussed in Subsection 7.6.2.5.4.

7.6.2.5.3.2.2 Conformance to Industry Standards

IEEE 279

The large number of individual LPRM channels, physical separation of groups of LPRMs, and electrical separation of these groups of LPRMs allow the LPRM system to meet single failure, channel independence, and separation requirements. Equipment quality requirements are met by the qualification of the LPRM equipment.

IEEE 323

LPRM equipment is qualified per the requirements of this standard.

IEEE 338

LPRM equipment is designed so that individual channels may be taken out of service for test or calibration without affecting the remaining channels.

IEEE 344

The LPRM equipment is designed and qualified to function during and after the design basis seismic event.

IEEE 379

The LPRM equipment is designed so that a single failure will not prevent needed safety functions.

IEEE 384

The four groups of LPRM channels are physically and electrically isolated from each other. They provide input to four separate APRM channels. Further discussion of compliance is contained in Subsection 7.2.2.1.2.3.9.

7.6.2.5.4 Average Power Range Monitor Subsystem

The analysis for the Average Power Range Monitor Subsystem is covered in Subsection 7.2.2 analysis for RPS.

7.6.2.5.4.1 General Functional Requirement Conformance

Each APRM derives its signal from LPRM information. The assignment, power separation, cabinet separation, and LPRM signal isolation are in accord with the safety design bases of the RPS. There are four APRM channels, one for each RPS trip logic, to allow one undetected failure of an APRM in compliance with the RPS safety design bases.

The tracking ability of the APRMs through power changes resulting from flow control and control rod manipulation is illustrated for a typical plant in General Electric Topical Report APED 5706.

The flow-referenced APRM scram set point is adequate to prevent fuel damage during an abnormal operational transient, as demonstrated in Chapter 15.

7.6.2.5.4.2 Specific Regulatory Requirement Conformance

7.6.2.5.4.2.1 Regulatory Guides Conformance

Regulatory Guide 1.22

The portion of the APRM subsystem that provides outputs to the Reactor Protection System is designed to provide complete periodic testing of Protection System Actuation Functions. This provision is accomplished by initiating an output trip of one APRM channel at any given time which will result in tripping one of the four RPS trip systems. Details are provided in Subsection 7.2.2.1.2.3.1.10.

Operator indication of APRM bypass is provided by indicator lamps.

Regulatory Guide 1.29

All devices and circuitry from sensor to trip output are classified as Seismic Category I.

Regulatory Guides 1.47, 1.53, 1.75, 1.89, 1.100, 1.105, and 1.118.

The APRM complies with these guides. Discussion is provided in Subsection 7.2.2.1.2.1.

7.6.2.5.4.2.2 Conformance to 10 CFR 50 Appendix A

Criterion 1, 2, 3, 10, and 25

The APRM, as an input to the Reactor Protection System, complies with these criteria as discussed in Subsection 7.2.2.1.2.2.

Criterion 13, 20, 21, 22, 23, 24, and 29

The APRM detection and associated electronics are designed to monitor the in-core flux over all expected ranges required for safety of the plant.

Automatic initiation of protection system action, reliability, testability, independence, and separation have been factored into the APRM design as required for protection systems.

7.6.2.5.4.2.3 Conformance to Industry Standards

IEEE 279

The APRM design is shown to comply with the design requirements of IEEE-279 in Subsection 7.2.2.1.2.3.1.

IEEE 323

APRM compliance is shown in Subsection 7.1.2.5.

IEEE 338

APRM compliance with IEEE 338 is shown in Subsections 7.2.2.1.2.3.1.9 and 7.2.2.1.2.3.1.10.

IEEE 379

LPRM signal separation, cabinet separation, use of isolation circuitry and number of channels per trip system are methods used to meet the single failure criterion. Convenient test and calibration circuits permit frequent checks for undetected failures.

IEEE 384

APRM channels are physically and electrically separated into four groups to provide four inputs to the Reactor Protection System. Further discussion of compliance is contained in Subsection 7.2.2.1.2.3.9.

7.6.2.5.5 Oscillation Power Range Monitor Subsystem

7.6.2.5.5.1 General Functional Requirement Conformance

The OPRM provides detailed information about neutron flux oscillations. It provides indications, alarms, and trip signals on detection of oscillations to complement the LPRM and APRM functions. The OPRM monitors the output of all installed LPRM detectors from available locations in the associated APRM panels. These LRPM signals are grouped together such that the resulting OPRM response provides adequate coverage of expected oscillation modes, either full core or second order harmonics (i.e. half core). Each OPRM channel is comprised of a relatively large number of OPRM cells, where an OPRM cell represents a combination of up to four LPRMs in geometrically adjacent areas of the core. LPRM signals may be input to more than one OPRM cell within a OPRM channel. The use of instantaneous flux and smaller grouping of LPRMs in cells provide a better resolution for detection of instability oscillations than the APRM system alone. By having cells consisting of more than one LPRM, but in a close proximity to each other, the OPRM will not be sensitive to single LPRM failures while still providing adequate margin to SCRAM, protecting the MCPR Safety Limit.

The OPRM System consists of four redundant OPRM trip channels, each channel consisting of two OPRM modules. Each OPRM module receives input from LPRMs. Each OPRM module aslo receives input signals from the APRM Power and RR Driver Flow signals to automatically enable the trip function of the OPRM module. The enabled region is conservatively large to assure no oscillation will occur outside the region. Also RR Drive flow is used to conservatively represent core flow.

The division of the OPRM into various groups for ac power supply allows operation with one ac power supply failed or out of service without limiting reactor operation. Individual failed OPRM channels can be bypassed. Oscillation information for a failed OPRM module can be accounted for by the companion module in the same channel or by the other divisional channles using octant-symmetric cell arrangements. Each LPRM is electrically isolated so that an event (grounding the signal or applying a stray voltage) on the reception end does not destroy the validity of the LPRM signal. Tests and experience attest to the ability of the OPRM to detect oscillations prior to exceeding the safety limit minimum critical power ratio.

7.6.2.5.5.2 Specific Regulatory Requirement Conformance

7.6.2.5.5.2.1 Conformance to Regulatory Guides

Regulatory Guide 1.22

The portion of the OPRM subsystem that provides outputs to the Reactor Protection System is designed to provide complete periodic testing of Protection System Actuation Functions. This provision is accomplished by an internal self test function as well as the capability of initiating an output trip of one OPRM channel at any given time which will result in tripping one of the four RPS inputs.

Regulatory Guide 1.29 and 1.100

All devices and circuitry from sensor to trip output are classified as Seismic Category 1.

Regulatory Guides 1.47, 1.53, 1.75, 1.89, 1.105, and 1.118

The OPRM complies with these guides via its input to the Reactor Protection System.

7.6.2.5.5.2.2 Conformance to 10 CFR 50 Appendix A

Criterion 1, 2, 3, 10, and 25

The OPRM, as an output to the Reactor Protection System, complies with these criteria.

Criterion 13, 20, 21, 22, 23, 24, and 29

The OPRM detection and associated electronics are designed to monitor the in-core flux over all expected ranges required for safety of the plant.

Criterion 12

The OPRM is designed to detect and suppress oscillations which could exceed the fuel design limits.

7.6.2.5.5.2.3 Conformance to Industry Standards

IEEE 279

The OPRM has been designed for single failure criteria, the components, including software, are built to 10CFR Part 50 Appendix B criteria, has multiple independent channels and power sources, fails to the trip condition on loss of power, automatically removes the trip bypass condition when power and flow are in the trip enabled region, and is testable and repairable on line. Therefore, it meets the requirements of IEEE 279.

IEEE 338

OPRM equipment is designed so that individual channels may be taken out of service for test or calibration without affecting the remaining channels.

IEEE 344

The OPRM equipment is designed and qualified to function during and after the design basis seismic event.

IEEE 379

The OPRM equipment is designed so that a single failure will not prevent needed safety functions.

IEEE 384

The four OPRM channels are physically and electrically isolated from each other. They provide input to four separate RPS channels.

The software functions of the OPRM have been designed and verified to the following industry standards: IEEE-7-4.3.2; IEEE 829; IEEE 830; IEEE 1008; IEEE 1012; IEEE 1016; and IEEE 1028.

7.6.2.5.6 Traversing In-Core Probe Subsystem (TIP)

The analysis for the TIP Subsystem is discussed in Subsection 7.7.2.6.

7.6.2.6 Not used

7.6.2.7 Rod Pattern Control System

7.6.2.7.1 General Functional Requirement Conformance

The requirements for the rod pattern control portions of RCIS will include tolerance of single failures and component quality. The rod pattern control portions of the RCIS include both channels of the rod position probe, the associated rod position multiplexers and the rod pattern controllers.

These portions of the RCIS are designed such that no single failure can result in rod motion. On loss of power to the system, rod motion is prohibited. All manual inputs from the RCIS are through isolation devices.

Data on rod positions for each rod pattern controller is dynamic with time and the position of all rods is continuously being scanned and updated. This data is decoded and transmitted to the rod pattern controller. Failed closed, open, or shorted reed switches appear as illegal data and is not accepted by the affected channel of rod pattern control. This action results in a rod block.

Any failure in one channel of the rod pattern controller will result in the transmission of false or illegal data to the RCIS. Since the data of each channel of the pattern controller is compared with the other channel, a rod block would occur. A permissive signal to move rods occurs only when the comparator portion of the RCIS will transmit the rod motion data to the corresponding rod. Transmission of rod motion data to the HCUs can occur only when both channels of the rod pattern controller input identical data to the RCIS. Failures producing identical false data probes, rod pattern controllers, or rod position multiplexers for both channels simultaneously would be required to effect incorrect rod motion. All data faults are displayed and rod blocks indicated.

7.6.2.7.2 Specific Regulatory Requirement Conformance

7.6.2.7.2.1 Conformance to Regulatory Guides

Regulatory Guide 1.47

See Subsection 7.6.1.7.3.1 for discussion of bypass conditions and alarms.

Regulatory Guide 1.53

See Subsections 7.6.1.7.6 and 7.6.2.7.1 for discussion.

Regulatory Guide 1.70

See Subsection 7.1.2.6.17 for degree of conformance.

Regulatory Guide 1.75

See Subsections 7.1.2.6.19 and 7.6.2.7.3 for degree of conformance.

Regulatory Guide 1.97

See Subsection 7.1.2.6.23 for degree of conformance.

Regulatory Guide 1.100

See Section 3.10 and Subsection 7.6.2.7.3 for degree of conformance.

Regulatory Guide 1.105

See Subsection 7.1.2.6.25 for degree of conformance.

Regulatory Guide 1.118

See Subsection 7.1.2.6.26 for degree of conformance.

7.6.2.7.2.2 Conformance to 10 CFR 50 Appendix A

Criterion 24

No failure in the rod pattern control portion of RCIS can prevent a protective system action.

7.6.2.7.2.3 Conformance to Industry Standards

IEEE-323

See Section 3.11 for degree of conformance.

IEEE-344

See Section 3.10 for degree of conformance.

IEEE-384

See Subsection 7.1.2.5.9 for degree of conformance.

7.6.2.7.3 Special Specific Requirements

7.6.2.7.3.1 Separation and Redundancy

The rod pattern control portion of RCIS has two channels which are separated to RG 1.75 criteria with the exception of the control rod position probe and its immediate connections, and with the exception of the output data to the hydraulic control units.

7.6.2.7.3.2 Single Failure

See Subsection 7.6.2.7.1.

7.6.2.7.3.3 Seismic Capability

The equipment will not permit an otherwise prohibited rod motion following, but not during, a seismic event.

7.6.2.7.3.4 Qualification

The equipment will be type-tested and qualified for operation in its normal environment, and will not permit an otherwise prohibited rod motion following an abnormal environmental condition.

7.6.2.8 End of Cycle Recirculation Pump Trip (EOC-RPT) System

7.6.2.8.1 General Functional Requirements Conformance

The EOC-RPT system is designed to aid the RPS in protecting the integrity of the fuel barrier. Turbine stop valve closure or turbine control valve fast closure will initiate a scram and recirculation pump trip in time to keep the core within the thermal-hydraulic safety limit during operational transients. The trip shifts the pumps to the low frequency motor generators.

The design uses a two-out-of-four RPS sensor logic to actuate the EOC-RPT system for either turbine stop valve closure or turbine control valve fast closure. Upon actuation of the EOC-RPT system, each RPS division energizes the trip coil of an individual recirculation pump fast speed breaker, resulting in a one-out-of-two trip logic for each pump. A trip of the sensed variable in any two divisions will result in a trip initiate signal for all recirculation pumps.

Failure to repair in a single RPS division will not violate single-failure criteria. Channel bypass switches are provided. The switches provide a "tripped" input to the recirculation pump trip logic. Sensors, channels, and logics of the EOC-RPT system are not used directly for automatic control or process systems. Therefore, failure in the controls and instrumentation of process systems cannot induce failure of any portion of the system. Design of the system to safety class requirements and the redundance of Class 1E power supplies as breaker trip sources assures actuation of the pump trip function if required during design-basis earthquake ground motion.

Operator verification that two-pump trip has occurred may be made by observing the following functions:

(1) recirculation flow indicators,

(2) breaker trip indicating lights,

(3) two-pump trip initiation annunciators.

7.6.2.8.2 Specific Regulatory Requirement Conformance

7.6.2.8.2.1 Conformance to Industry Standards

7.6.2.8.2.1.1 IEEE-279

General Functional Requirement (IEEE 279 Par. 4.1)

Refer to general functional requirements conformance in Subsection 7.6.2.8.1.

Single-Failure Criterion (IEEE 279 Par. 4.2)

The design complies as discussed in 7.6.2.8.1.

Quality of Components and Modules (IEEE 279 Par. 4.3)

The division logic consists of high-quality circuitry that has been proven to be highly reliable and is qualified per IEEE 323.

The actuators are devices selected to be operated substantially within their capabilities and are of high quality and reliability and qualified for their application per IEEE 323.

Equipment Qualification (IEEE 279 Par. 4.4)

At the component level, vendor certification is required that these parts will operate in accordance with the requirements of the purchase specification. Devices have been qualified. In addition, insitu operational tests have been performed on the system during the preoperational test phase.

Channel Integrity (IEEE 279 Par. 4.5)

The logic system complies with this requirement.

Channel Independence (IEEE 279 Par. 4.6)

The four-division arrangement meets this requirement.

Control and Protection System Interaction (IEEE 279 Par. 4.7)

The four division logics are totally separate from any nonprotection system. Due to the design of this output and separation of the cabling, there is no interaction with control systems of the plant. The actuator logic has no interaction with any other plant system, and the breaker trips are physically separate and electrically isolated from the other portions of the recirculation pump power supply. Consequently, this design requirement is met by this equipment. Any system interlocks to control systems will only be isolated such that no failure or combination of failures will have any effect on EOC-RPT.

Derivation of System Inputs (IEEE 279 Par. 4.8)

This design requirement is met by the instrument channels selected for inputs. See the RPS Subsection 7.2.2.

Capability for Sensor Checks (IEEE 279 Par. 4.9)

This design requirement is not literally applicable but by interpretation can be applied and is fully complied with by the input tests, logic tests, and output tests for which provisions are made. The system utilizes RPS sensors addressed in Subsection 7.2.2.1.2.3.1.9.

Capability for Test and Calibration (IEEE 279 Par. 4.10)

Refer to Subsection 7.2.2.1.2.3.1.10.

Channel Bypass or Removal from Operation (IEEE 279 Par. 4.11)

This design requirement is not applicable.

Operating Bypasses (IEEE 279 Par. 4.12)

See Subsection 7.2.2.1.2.3.1.12.

Indication of Bypasses (IEEE 279 Par. 4.13)

This design requirement is complied with by indication of test bypasses.

Access to Means for Bypassing (IEEE 279 Par. 4.14)

This design requirement is complied with by operator control of test program.

Multiple Setpoints (IEEE 279 Par. 4.15)

This design requirement is not applicable.

Completion of Protective Action Once It Is Initiated (IEEE 279 Par. 4.16)

Once the EOC-RPT logic is tripped, it in turn trips the trip coils of the recirculation pump breakers.

Manual Actuation (IEEE 279 Par. 4.17)

Manual actuation is provided in the recirculation system.

Access to Setpoint Adjustments, Calibration, and Test Points (IEEE 279 Par. 4.18)

This design requirement is met. See Subsection 7.2.2.1.2.3.1.18.

Identification of Protective Actions (IEEE 279 Par. 4.19)

Main control room annunciators are provided to identify the tripped portions of RPT in addition to the previously described instrument channel indicators associated with the RPS:

(1) Recirculation Pump motor A tripped, and

(2) Recirculation Pump motor B tripped.

These same functions are connected to the performance monitoring system to provide a typed record of the system status.

Information Readout (IEEE 279 Par. 4.20)

The information presented to the main control room operator satisfies this design requirement.

Systems Repair (IEEE 279 Par. 4.21)

The design complies with this design requirement.

Identification of Protection Systems (IEEE 279 Par. 4.22)

Refer to Subsection 7.2.2.1.2.3.1.22.

7.6.2.8.2.1.2 IEEE 308 Standard Criteria for Class 1E Electric Systems

This does not apply to the logic system, which is failsafe. Its power supplies are thus unnecessary for EOC-RPT. A Class 1E system is required to energize the breaker trip coils.

7.6.2.8.2.1.3 IEEE 323-Standard General Guide for Qualifying Class 1 Electric Equipment

See Subsection 3.11.

7.6.2.8.2.1.4 IEEE 338-Periodic Testing

Refer to Subsection 7.2.2.1.2.3.6.

7.6.2.8.2.1.5 IEEE 344-Seismic Qualifications

All Class 1E Equipment will meet the requirements of Subsection 3.10.1.

7.6.2.8.2.1.6 IEEE 379-Application of the Single-Failure Criterion to Nuclear Power Generating Station Protection Systems

These requirements are satisfied by consideration of the different types of failure and carefully designing all violations of the single-failure criterion out of the system. An exception may be imposed infrequently during periodic logic testing when the EOC-RPT inhibit switch is utilized.

7.6.2.8.2.2 Regulatory Guides Conformance

Regulatory Guide 1.22

The system is designed so that it may be tested during plant operation from sensor device to final actuator logic.

Regulatory Guide 1.29

See Subsection 7.1.2.6.6 for degree of conformance.

Regulatory Guide 1.30

See Subsection 7.1.2.6.7 for degree of conformance.

Regulatory Guide 1.47

Regulatory Positions C.1., C.2 and C.3

Indication is provided to show a part of a system is not operable. Bypassing is possible by operating the EOC-RPT bypass switch in one EOC-RPT division.

All bypass and inoperability indicators both at the division level and the component level are grouped for operational convenience. As a result of design, preoperational testing, and startup testing, no erroneous bypass indication is anticipated.

These indication provisions serve to supplement administrative controls and aid the operator in assessing the availability of component and system level protective actions. This indication does not perform functions that are essential to the health and safety of the public.

All indication circuits are electrically independent of the plant safety systems to prevent the possibility of adverse effects. Annunciator initiation signals are provided through isolation devices and can in no way prevent protective actions. Each indicator is provided with dual lamps. Testing is included on a periodic basis when equipment associated with the indication is tested.

Regulatory Guide 1.53

Compliance with Regulatory Guide 1.53 is by specifying, designing, and constructing the reactor protection system to meet the single-failure criterion (Section 4.2 of IEEE 279 and IEEE 379). Redundant sensors are used and the logic is arranged to ensure that a failure in a sensing element or the division logic or an actuator will not prevent EOC-RPT. Separate channels are employed, so that a fault affecting one channel will not prevent another channel from operating properly.

Regulatory Guide 1.62

See Subsection 7.1.2.6.14 for degree of conformance.

Regulatory Guide 1.70

See Subsection 7.1.2.6.17 for degree of conformance.

Regulatory Guide 1.75

See Subsection 7.2.2.1.2.1.10 which degree of conformance also applies to the EOC-RPT portion of RPS.

Regulatory Guide 1.89

See Section 3.11 for degree of conformance.

Regulatory Guide 1.100

See Section 3.10 for degree of conformance.

Regulatory Guide 1.105

See Subsection 7.1.2.6.25 for degree of conformance.

Regulatory Guide 1.118

See Subsection 7.1.2.6.26 for degree of conformance, except that response time testing of the recirculation pump breakers associated with the EOC-RPT logic is not required to be performed as approved via Amendment No. 111 to the CPS Operating License.

7.6.2.8.2.3 Conformance to 10 CFR 50 Appendix A - General Design Criteria

(1) Criterion 13 - Each system input is monitored and annunciated.

(2) Criterion 20 - The system constantly monitors the appropriate plant variables and initiates an EOC-RPT automatically when the variables exceed setpoints.

(3) Criterion 21 - The system is designed with four independent and separate instrument channels and four independent and separate output divisions. No single failure or operator action can prevent EOC-RPT. The instrumentation and logic can be tested during plant operation to assure its availability.

(4) Criterion 22 - The redundant portions of the system are separated such that no single failure or credible natural disaster can prevent a trip.

(5) Criterion 23 - Where the system is not fail safe, redundant Class 1E sources are utilized. Loss of a power supply will not prevent a trip. Postulated adverse environments will not prevent a trip.

(6) Criterion 24 - The system has no control function. Signals for main control room annunciation are isolated.

(7) Criterion 29 - The system is highly reliable so that it will trip in the event of the anticipated operational occurrences.

7.6.2.9 Fuel Pool Cooling Functional Requirements

7.6.2.9.1 Conformance to General Functional Requirements

Conformance to general functional requirements is described in Subsections 9.1.3 and 7.6.1.9.

7.6.2.9.2 Conformance to Specific Regulatory Requirements

7.6.2.9.2.1 Regulatory Guides Conformance

7.6.2.9.2.1.1 Regulatory Guide 1.13

See Subsection 9.1.3.3 for degree of conformance.

7.6.2.9.2.2 Conformance to 10 CFR 50, Appendix A

Criterion 5

The FPC&C system filter demineralizers (F/D) are not shared with any other unit.

Criterion 13

Conformance is achieved by monitoring appropriate variables over the expected range and providing cooling and makeup water functions to maintain the variables within the prescribed ranges.

Criterion 18

Two redundant FPC&C subsystems are divided into Division 1 and Division 2. The independence of these Divisions prevents compromise, and enhances inspection of safety-related power supply systems.

7.6.2.9.2.3 Conformance to Industry Standards

7.6.2.9.2.3.1 IEEE 279 Criteria for Protection Systems for Nuclear Power Generating Stations

The FPC&C system is not required to meet the requirements of IEEE 279.

7.6.2.9.2.3.2 Compliance to IEEE 338

The operability of the FPC&C can be verified and credible failures are detectable through testing during normal plant operation. Each subsystem logic through the final actuators may be tested independent of the other subsystem. The input sensors and setpoints are checked by the application of simulated signals. A failure of a subsystem while testing will not prevent the other subsystem from being initiated.

7.6.2.10 Containment Atmosphere Monitoring System - Instrumentation and Controls

7.6.2.10.1 General Functional Requirements Conformance

The containment atmosphere monitoring (CAM) system provides normal and postaccident monitoring for gross gamma radiation and hydrogen/oxygen concentration levels in both the drywell and containment. Main control room display and annunciation indicate the gamma and hydrogen/oxygen levels to the operating personnel.

7.6.2.10.2 Specific Regulatory Requirements Conformance

7.6.2.10.2.1 Regulatory Guides Conformance

Regulatory Guide 1.29

The CAM system is qualified to Seismic Class I.

Regulatory Guide 1.53

The CAM system design conforms to the single failure criterion.

Regulatory Guide 1.75

The safety-related CAM system described in Subsection 7.6.1.10 meets the independence and separation criteria for redundant systems in accordance with Regulatory Guide 1.75.

Regulatory Guide 1.89

The safety-related CAM system described in Subsection 7.6.1.10 is type tested to meet the requirements of IEEE 323 and IEEE 344.

Regulatory Guide 1.97

The safety-related CAM system described in Subsection 7.6.1.10 complies with Regulatory Guide 1.97.

Regulatory Guide 1.100

The safety-related CAM system meets the requirements of IEEE 344.

7.6.2.10.2.2 Conformance to 10 CFR 50 Appendix A

Criterion 13

The CAM system monitors the hydrogen, oxygen, and gamma radiation levels in containment during normal operation and after an accident.

Criterion 19

Indication and alarms are provided to the operator in the main control room.

Criterion 41

The CAM system is provided with redundant channels to measure the hydrogen/oxygen levels in containment after an accident.

7.6.2.10.2.3 Industry Standards Conformance

7.6.2.10.2.3.1 IEEE 279

General Functional Requirements (IEEE 279 Paragraph 4.1)

Refer to general functional requirements conformance in Subsection 7.6.2.10.1.

Single-Failure Criterion (IEEE 279 Paragraph 4.2)

No single failure will cause the loss of hydrogen/oxygen or gamma indication.

Quality of Components and Modules (IEEE 279 Paragraph 4.3)

The CAM system consists of high quality components. They meet the requirements of the specification.

The quality assurance program is required to be implemented and documented by equipment vendors with the intent of complying with the requirements set forth in 10CFR50, Appendix B.

Equipment Qualification (IEEE 279 Paragraph 4.4)

The CAM system was type tested to ensure the safety-related function operates in accordance with the requirements of the purchase specification. The manufacturers must complete test reports certifying that the CAM system safety-related functions are met in the event of an accident.

Channel Integrity (IEEE 279 Paragraph 4.5)

No protective action is required by the CAM system. The safety-related indication complies.

Channel Independence (IEEE 279 Paragraph 4.6)

The two-division arrangement meets this requirement for the safety-related indication.

Control and Protection System Interaction (IEEE 279 Paragraph 4.7)

The CAM system output does not perform any control function.

Derivation of System Inputs (IEEE 279 Paragraph 4.8)

The high-range gamma radiation monitor measures the radiation levels via an ionization chamber.

The H_2/O_2 monitoring subsystem measures gas concentrations via a gas chromatograph.

Capability for Sensor Checks (IEEE 279 Paragraph 4.9)

The CAM system complies. Refer to Subsection 7.6.1.10.9.

Capability for Test and Calibration (IEEE 279 Paragraph 4.10)

The CAM system complies. Refer to Subsection 7.6.1.10.9.

Channel Bypass or Removal from Operation (IEEE 279 Paragraph 4.11)

The CAM system is a redundant system. Removal from operation of one channel does not affect the redundant channel. The CAM system does not initiate any protective action.

Operating Bypasses (IEEE 279 Paragraph 4.12)

Each H_2/O_2 divisional monitoring subsystem isolation valve is opened after an accident via a key-operated bypass switch for each division. When sampling is completed, the switch is placed in normal position and isolation valves close if isolation signals are still present.

Indication of Bypasses (IEEE 279 Paragraph 4.13)

Whenever either redundant CAM channel is out of operation or either containment isolation valve signal is bypassed, the main control room annunciator lamps are alarmed.

Access to Means for Bypassing (IEEE 279 Paragraph 4.14)

The operator, through administrative procedures, is allowed to manually open the containment isolation valves via a key-operated bypass switch after an accident.

Multiple Setpoints (IEEE 279 Paragraph 4.15)

This design requirement is not applicable.

Completion of Protective Action Once It is Initiated (IEEE 279 Paragraph 4.16)

The CAM system does not initiate a protective action. The CAM system is in service during an accident to provide indication until terminated by the operator.

Manual Actuation (IEEE 279 Paragraph 4.17)

The CAM system does not initiate a protective action; therefore, this is not applicable.

Access to Setpoint Adjustments, Calibration, and Test Points (IEEE 279 Paragraph 4.18)

Access to setpoint adjustments, calibration points, and test points is regulated by administrative control.

Identification of Protective Actions (IEEE 279 Paragraph 4.19)

The CAM system does not initiate protective action; therefore, this is not applicable.

Information Readout (IEEE 279 Paragraph 4.20)

The information presented to the main control room operator satisfies this design requirement.

Systems Repair (IEEE 279 Paragraph 4.21)

The design of the system complies with this design requirement.

Identification of Protection Systems (IEEE 279 Paragraph 4.22)

Name plates are used to identify the divisional system equipment.

7.6.2.10.2.3.2 IEEE 323

Qualification of the CAM system is provided through type testing in compliance with the requirements of IEEE 323.

7.6.2.10.2.3.3 IEEE 334

The H_2/O_2 monitoring subsystem motors are type tested to meet these requirements.

7.6.2.10.2.3.4 IEEE 336

The CAM system is installed, inspected, and tested to meet the intent of IEEE 336.

7.6.2.10.2.3.5 IEEE 338

The system complies with IEEE 338. The system is testable during normal plant operation. Refer to Subsection 7.6.1.10.9.

7.6.2.10.2.3.6 IEEE 344

The CAM system complies with the requirements of IEEE 334 by type testing.

7.6.2.10.2.3.7 IEEE 379

The system is redundant and no single failure will cause a complete loss of indication. Therefore, the CAM system meets the intent of this standard.

7.6.2.10.2.3.8 IEEE 383

The CAM system complies with this requirement by type testing. Cables and connections meet requirements of IEEE 323 - 1974.

7.6.2.10.2.3.9 IEEE 384

The CAM system is a redundant system. Sensors, cables, cabinets, and electrical penetrations per division are physically separated. Isolators are provided to separate Class 1E components from non-Class 1E components. Refer to Subsection 7.1.2.5.9.

7.6.2.10.2.3.10 IEEE 622

The CAM system H_2/O_2 monitoring subsystem is provided with qualified heat tracing. The design of the heat tracing and temperature controllers is qualified by type testing to ensure the system can operate post-LOCA. The heat tracing circuits are continuously monitored for loss of current or low sample line temperature.

Proper installation inspection is performed to ensure the setpoint temperature of the sample gases is maintained.

The heat tracing is designed to meet the intent of this standard.

6.2.10.2.4 NUREG Conformance

NUREG-0588

The CAM system meets the Environmental Category I requirements.

NUREG-0737

The high-range gamma radiation monitoring subsystem complies with NUREG-0737, Article II.F.1-3, with the exceptions as noted in Appendix D, Subsection II.F.1.

The H_2/O_2 monitoring subsystem complies with NUREG-0737, Article II.F.1-6.

7.6.2.11 Additional Design Considerations Analyses

7.6.2.11.1 General Plant Safety Analyses

The examination of the subject safety systems at the plant safety analyses level is presented in Chapter 15 and Appendix 15A.

7.6.2.11.2 Cold Water Slug Injection

Refer to Section 15.5.1.

7.6.2.11.3 Refueling Accidents

Refer to Section 15.7.4.

7.6.2.12 Safety Relief Valve Monitoring (SRVM) System Instrumentation

7.6.2.12.1 Conformance to General Functional Requirements

Conformance to general functional requirements is described in Subsection 7.6.1.11.3.1.

7.6.2.12.2 Conformance to Specific Regulatory Requirements

7.6.2.12.2.1 Conformance to 10CFR50 Appendix A

Criterion 14

The SRVM system gives the operator indication from a reliable source of the "not closed" position of the relief valves so proper action can be initiated.

7.6.2.12.3 Conformance to Industry Standards

7.6.2.12.3.1 IEEE 279

General Functional Requirement (IEEE 279 Paragraph 4.1)

Refer to Subsection 7.6.2.12.1.

Single-Failure Criterion (IEEE 279 Paragraph 4.2)

This design requirement is not applicable to the SRVM system.

Quality of Components and Modules (IEEE 279 Paragraph 4.3)

The SRVM system consists of high-quality components that are proven to be highly reliable.

The devices of each channel are selected to operate substantially within their capabilities and without significant degradation during anticipated duty over the lifetime of the plant. The quality assurance program implemented by the equipment vendor complies with the requirements set forth in 10CFR50, Appendix B.

Equipment Qualification (IEEE 279 Paragraph 4.4)

The equipment is specified to include qualification of the hardware to cover the full range of the expected environments during normal operating conditions, abnormal occurrences, and accident conditions.

Channel Integrity (IEEE 279 Paragraph 4.5)

The SRVM system is type tested to verify its integrity under all expected operating conditions.

Channel Independence (IEEE 279 Paragraph 4.6)

With the exception of a common power supply, each channel of the SRVM system is independent.

Control and Protection System Interaction (IEEE 279 Paragraph 4.7)

The SRVM system performs no control functions and has no interconnection to any control systems.

Derivation of System Inputs (IEEE 279 Paragraph 4.8)

The SRVM system utilizes direct measurement of flow to determine SRV position to the extent feasible and practical.

Capability for Sensor Checks (IEEE 279 Paragraph 4.9)

The SRVM system design provides for the capability to check the operational availability of each system input sensor during reactor operation.

Capability for Test and Calibration (IEEE 279 Paragraph 4.10)

Refer to Subsection 7.6.1.11.3.7.

Channel Bypass of Removal from Operation (IEEE 279 Paragraph 4.11)

Refer to Subsection 7.6.1.11.3.3.

Operating Bypasses (IEEE 279 Paragraph 4.12)

This design requirement is not applicable.

Indication of Bypasses (IEEE 279 Paragraph 4.13)

This design requirement is complied with by indication of test bypasses.

Access to Means for Bypassing (IEEE 279 Paragraph 4.14)

This design requirement is complied with by operator control of the test program.

Multiple Setpoints (IEEE 279 Paragraph 4.15)

This design requirement is not applicable.

Completion of Protective Action Once It Is Initiated (IEEE 279 Paragraph 4.16)

This design requirement is not applicable.

Manual Actuation (IEEE 279 Paragraph 4.17)

This design requirement is not applicable.

Access to Setpoint Adjustments, Calibration, and Test Points (IEEE 279 Paragraph 4.18)

Refer to Subsection 7.6.1.11.3.7.

Identification of Protective Actions (IEEE 279 Paragraph 4.19)

This design requirement is not applicable.

Information Readout (IEEE 279 Paragraph 4.20)

The information presented to the main control room operator satisfies this design requirement.

Systems Repair (IEEE 279 Paragraph 4.21)

The design complies with this design requirement.

Identification of Protection Systems (IEEE 279 Paragraph 4.22)

The design complies with this design requirement.

7.6.2.12.3.2 IEEE 323 - Standard General Guide for Qualifying Class 1 Electric Equipment

The SRVM system equipment is environmentally qualified per the requirements of this standard.

7.6.2.12.3.3 IEEE 344 Seismic Qualifications

The SRVM system equipment is qualified to function during and after the design basis seismic event per the requirements of this standard.

7.6.2.12.4 NUREG-0737 Item II.D.3

The reactor coolant system safety-relief valves are provided with a positive indication in the main control room derived from a reliable indication of flow in the discharge pipe. The system provides the operator with indication of valve position so appropriate operator actions can be taken. The valve position is indicated in the main control room and an alarm is provided in conjunction with this indication. The valve position indication is a safety grade reliable single-channel indication powered from a vital instrument bus without a redundant method of determining valve position. However, diversity is provided by the leak detection system, discussed in Subsection 7.7.1.1.3.1.6. The valve position indication system is seismically and environmentally qualified, and appropriate human factors are taken into consideration.

7.6.2.12.5 NUREG-0737, Item II.B.3 - Postaccident Sampling Capability

Clinton Power Station License Amendment 155 approves the elimination of the requirement to have and maintain the Post Accident Sampling System.

The following information contained in the USAR regarding the regulatory requirements for post accident sampling is retained for historical purposes.

The capability to promptly obtain reactor coolant samples in the event of an accident in which there is core damage is described below.

1. Compliance with all requirements of NUREG-0737, II.B.3, for sampling, chemical and radionuclide analysis capability, under accident conditions is demonstrated in USAR Appendix D, Item II.B.3 and subsection 9.3.7.

2. Sufficient shielding has been provided to meet the requirements of GDC-19, assuming Reg. Guide 1.3 source terms.

3. The sampling and analysis requirements of Reg. Guide 1.97, Rev. 3 have been met per USAR Appendix D, Item II.B.3 and subsection 9.3.7.

4. Verification that all electrically powered components associated with postaccident sampling are capable of being supplied with power and operated, within thirty minutes of an accident in which there is core degradation, assuming loss of offsite power has been provided in USAR Appendix D, Item II.B.3 and subsection 9.3.7.

5. Verification that valves which are not accessible for repair after an accident are environmentally qualified for the conditions in which they must operate has been provided in USAR Appendix D, Item II.B.3 and subsection 9.3.7.

6. A procedure has been developed for relating radionuclide gaseous and ionic species to estimate core damage. The procedure factors in other plant indicators (hydrogen, containment radiation, etc.) in interpreting the extent of core damage and will be used for accident assessment in the Clinton Power Station (CPS) Emergency Plan.

7. The design of operational provisions required to prevent high pressure carrier gas from entering the reactor coolant system from on line gas analysis equipment are stated in USAR Appendix D, Item II.B.3.

8. A method of verifying that reactor coolant dissolved oxygen is at < 0.1 ppm if reactor coolant chlorides are determined to be ≥ 0.15 ppm is provided in USAR Appendix D, Item II.B.3 and subsection 9.3.7.

9. A demonstration that the reactor coolant system and suppression chamber sample locations are representative of core conditions is provided in USAR Appendix D, Item II.B.3.

Data regarding accuracy and sensitivity of analytical procedures and on-line instrumentation for the Postaccident Sampling System has been provided to the NRC staff via the "Postaccident Sampling System Evaluation Report" (Reference IPC letter U-0833, dated April 19, 1985 from Mr. F. A. Spangenberg, IPC to Mr. A. Schwencer, Chief Licensing Branch No. 2, NRC). (Q&R 281.11)

7.6.3 References

1. Morgan, W.R., "In-Core Neutron Monitoring System for General Electric Boiling Water Reactors", APED-5706, November, 1968 (Rev. April, 1969).

TABLE 7.6-1
REFUELING INTERLOCK EFFECTIVENESS

Situation	Refueling Platform Position	Refueling TMH*	Platform FMH*	FG*	Control Rods	Mode Switch	Attempt	Result
1.	Not near core	UL*	UL*	UL*	All rods in	Refuel	Move refueling platform over core	No restrictions
2.	Not near core	UL	UL	UL	All rods in	Refuel	Withdraw rods	Cannot withdraw more than one rod
3.	Not near core	UL	UL	UL	One rod withdrawn	Refuel	Move refueling platform over core	No restrictions
4.	Not near core	UL	UL	L	One or more rods withdrawn	Refuel	Move refueling platform over core	Platform stopped before over core
5.	Not near core	UL	UL	UL	More than one rod withdrawn	Refuel	Move refueling platform over core	Platform stopped before over core
6.	Over core	UL	UL	UL	All rods in	Refuel	Withdraw rods	Cannot withdraw more than one rod
7.	Over core	UL	UL	L	All rods in	Refuel	Withdraw rods	Rod block
8.	Not near core	UL	UL	UL	All rods in	Startup	Move refueling platform over core	Platform stopped before over core
9.	Not near core	UL	UL	UL	All rods in	Startup	Withdraw rods	No restrictions
10.	Over core	UL	UL	UL	All rods in	Startup	Withdraw rods	Rod block

* Legend

TMH - Trolley Mounted Hoist FMH - Frame Mounted Hoist FG - Fuel Grapple UL - Unloaded L - Fuel Loaded

TABLE 7.6-2
PROCESS RADIATION MONITORING SYSTEMS - INSTRUMENT CHARACTERISTICS

Monitoring Subsystem	Instrument Scale	Trips per Channel
Mainsteam Line Rad Monitor(1)	$1\text{-}10^6$mR/hr	2

(1) Refer to Section 7.6.1.2.1.

TABLE 7.6-3
THIS TABLE HAS BEEN INTENTIONALLY DELETED

TABLE 7.6-4
IRM TRIPS

TRIP FUNCTION	NOMINAL SETPOINT	TRIP ACTION
IRM upscale trip	120/125 FS	Scram, annunciator, red light display
or IRM inoperative	(See Note)	Rod Block, scram, annunciator red light display
IRM upscale alarm	108/125 FS	Rod block, annunciator, amber light display.
IRM downscale	5/125 FS	Rod block (exception on most sensitive scale), annunciator, amber light display
IRM bypassed		White light display

Note: IRM is inoperative if module interlock chain is broken, operate-calibrate switch is not in operate position, or detector polarizing voltage is below 80 V.

TABLE 7.6-5
LPRM SYSTEM TRIPS

TRIP FUNCTION	LPRM POWER RANGE	TRIP ACTION
LPRM downscale	0 to 125% full scale	Indicator and annunciator
LPRM upscale	0 to 125% full scale	Indicator and annunciator
LPRM bypass	Manual switch	Indicator and APRM averaging compensation

TABLE 7.6-6
APRM SYSTEM TRIPS

TRIP FUNCTION	APRM POWER RANGE	ACTION
APRM downscale	0 to 125% full scale (5% nominal)	Rod block, annunciator, amber light display
**APRM upscale alarm	Setpoint varies with flow, slope adjustable, intercepts separately adjustable	Rod block, annunciator, amber light display
**APRM upscale Thermal Trip	Setpoint varies with flow, slope adjustable, intercepts separately adjustable	Scram, annunciator, red light display
APRM upscale Neutron Trip	0 to 125% full scale (118% nominal)	Scram, annunciator, red light display
APRM inoperative	Calibrate switch or too few inputs	Scram, rod block, annunciator, red light display
APRM Bypass	Manual Switch	White light

**APRM signal passes through a 6 second time constant circuit to simulate heat flux prior to setpoint comparison

Note: Setpoints are listed in the Operational Requirements Manual (ORM).

7.7 CONTROL SYSTEMS NOT REQUIRED FOR SAFETY

7.7.1 Description

This subsection discusses instrumentation controls of systems whose functions are not essential for the safety of the plant and permits an understanding of the way the reactor and important subsystems are controlled. The systems include:

(1) reactor vessel - instrumentation

(2) rod control and information system (RCIS) - instrumentation and controls

(3) recirculation flow control system - instrumentation and controls

(4) feedwater control system - instrumentation and controls

(5) pressure regulator and turbine - generator system - instrumentation and controls

(6) neutron monitoring system (NMS) - instrumentation and controls

(7) performance monitoring computer (PMS)

(8) reactor water cleanup (RWCU) system - instrumentation and controls

(9) area radiation monitoring system (ARM) - instrumentation and controls

(10) gaseous radwaste system - instrumentation and controls

(11) liquid radwaste system - instrumentation and controls

(12) solid radwaste system - instrumentation and controls

(13) auxiliary building HVAC system - instrumentation and controls

(14) fuel building HVAC system - instrumentation and controls

(15) drywell cooling system - instrumentation and controls

(16) drywell purge system - instrumentation and controls

(17) containment building HVAC system - instrumentation and controls

(18) radwaste building HVAC system - instrumentation and controls

(19) process radiation monitoring system - instrumentation and controls

(20) fire protection and suppression system - instrumentation and controls

(21) display control system (DCS)

(22) source range monitor (SRM) subsystem

(23) main control room annunciator system

(24) leak detection system - instrumentation and controls

(25) anticipated transient without scram - instrumentation and controls

(26) safety parameter display system (SPDS)

(27) buffer system

7.7.1.1 Reactor Vessel - Instrumentation

Drawing 796E724 (Nuclear Boiler System P&ID) shows the instrument numbers, arrangements of the sensors, and sensing equipment used to monitor the reactor vessel conditions. Because the reactor vessel sensors used for safety systems, engineered safeguards, and control systems are described and evaluated in other portions of this document, only the sensors that are not required for those systems are described in this subsection.

7.7.1.1.1 System Identification

7.7.1.1.1.1 General

The purpose of the reactor vessel instrumentation is to monitor the key reactor vessel operating variables during plant operation.

These instruments and systems are used to provide the operator with information during normal plant operation, startup and shutdown. They are monitoring devices and provide no active power control or safety functions.

7.7.1.1.1.2 Classification

The systems and instruments discussed in this Subsection are designed to operate under normal and peak operating conditions of system pressures and ambient pressures and temperatures and are classified as not related to safety.

7.7.1.1.1.3 Reference Design

Table 7.1-2 lists the reference design information. This system is functionally identical to the referenced system, except as noted in Table 7.1-2 footnote I.

7.7.1.1.2 Power Sources

The systems and instruments discussed in this subsection are powered from nonsafety-related instrument buses, unless stated otherwise.

7.7.1.1.3 Equipment Design

For instruments which are located below the process tap, the sensing lines will slope downward from the process tap to the instrument a minimum of 1 in/ft, so that air traps are not formed and bubbles will return to the process.

7.7.1.1.3.1 Circuit Description

7.7.1.1.3.1.1 Reactor Vessel Temperature

The reactor pressure vessel (RPV) temperature is determined on the basis of reactor coolant temperature. Temperatures needed for operation and for compliance with the technical specification operating limits are obtained from one of several sources, depending on the operating condition. During normal operation, either reactor pressure and/or the inlet temperature of the coolant in the recirculation loops can be used to determine the vessel temperature. Below the operating span of the temperature read out in the recirculation loop and above 212°F, the vessel pressure is used for determining the temperature. Below 212 °F, the vessel coolant, and thus the vessel temperature, is reasonably well shown by the reactor water cleanup system inlet temperature. These three sources of input are most conveniently available from the performance monitoring system. During normal operation, vessel thermal transients are limited via operational constraints on parameters other than temperature.

7.7.1.1.3.1.2 Reactor Vessel Water Level

Figure 7.7-1 shows the water level range and the vessel pressure tap for each water level range. The instruments that sense the water level are strictly differential pressure devices calibrated to be accurate at a specific vessel pressure and liquid temperature condition. The following is a description of each water level range shown on Figure 7.7-1.

(1) Shutdown Water Level Range: This range is used to monitor the reactor water level during the shutdown condition when the reactor is flooded for maintenance and head removal. The water level measurement design is the reference leg type. The vessel temperature and pressure condition that is used for the calibration is 0 psig and 120°F water in the vessel.

(2) Upset water Level Range: This range is continuously recorded (one pen, 0 to 180") on the same dual pen recorder as the Narrow Water Level Range (the other pen, 0 to 60"). The vessel pressure and temperature condition for accurate indication is at the normal operating point.

(3) Narrow Water Level Range: This range has RPV taps at the elevation near the top of the dryer skirt and at an elevation near the bottom of the dryer skirt. The zero of the instrument is near the bottom of the dryer skirt and the instruments are calibrated to be accurate at the normal operating point. The water level measurement design is the condensate reference chamber type and uses differential pressure devices as its primary elements. The feedwater control system uses this range for its water level control and indication inputs. For more information as to the range, trip points, number of channels, and main control room indication, see the discussion on the feedwater control system, Subsection 7.7.1.4.

(4) Wide Water Level Range: This range is safety- related and is described in Subsection 7.5.1.4.2.1.

(5) Fuel Zone Water Level Range: The range is from over the top of the active fuel to near the bottom of the active fuel. The ranges of the wide range level and the fuel zone level overlap. The fuel zone water level range has RPV taps at the

elevation near the bottom of the dryer skirt and at the jet pump diffuser skirt. The zero of the instrument is at the top of the active fuel, and the instruments are calibrated to be accurate at 0 psig and saturated condition and reactor recirculation pumps tripped. Fuel zone water level signals are transmitted from two independent differential pressure transmitters. One signal goes to a fuel zone water level indicator and the other water level signal goes to a fuel zone water level recorder. The recorder and indicator are located on the RCCS benchboard. The differential pressure transmitters have one side connected to the narrow range variable leg tap and the other side connected directly to the bottom tap of a calibrated jet pump for the variable leg. The power source for the fuel zone level indicator and its transmitter are fed from a battery backed uninterruptible power source 1E bus, while the power source for the fuel zone level recorder and its level transmitter are fed from a separate 1E bus.

The fuel zone water level system is not compensated for variation in reactor water density. A second scale is provided on the control room indicator which references the water level to 15 inches above the bottom of the dryer skirt.

The condensate reference chambers for the narrow range, and wide range, water level range are common as shown by Drawing 796E724, Sheet 3. Common reference level for reactor vessel level instrumentation is discussed in Appendix D by item II.K.3.27.

Reactor water level instrumentation that initiates safety systems and engineered safeguards systems is discussed in Subsections 7.2.1 and 7.3.1. Reactor water level instrumentation that is used as part of the feedwater control system is discussed in Subsection 7.7.1.4.3.2.

7.7.1.1.3.1.3 Reactor Core Hydraulics

A differential pressure transmitter indicates core plate pressure drop by measuring the pressure difference between the core inlet plenum and the space just above the core support assembly. The instrument sensing line used to determine the pressure below the core support assembly attaches to the same reactor vessel tap that is used for the injection of the liquid from the standby liquid control system. An instrument sensing line is provided for measuring pressure above the core support assembly. The differential pressure of the core plate is recorded in the main control room.

A local differential pressure device indicates the jet pump developed head by measuring the pressure difference between the pressure above the core and the pressure below the core plate.

7.7.1.1.3.1.4 Reactor Vessel Pressure

Pressure indicators and transmitters detect reactor vessel internal pressure from the same instrument lines used for measuring reactor vessel water level.

The following list shows the subsection in which the reactor vessel pressure measuring instruments are discussed:

(1) Pressure transmitters and trip units for initiating a reactor scram are discussed in Subsection 7.2.1.1.4.2.

(2) Pressure transmitters and trip units used for ECCS logic are discussed in Subsection 7.3.1.1.1.

(3) Pressure transmitters and recorders used for feedwater control are discussed in Subsection 7.7.1.4.

(4) Pressure transmitters that are used for pressure recording are discussed in Subsection 7.5.1.4.2.2.

7.7.1.1.3.1.5 Reactor Vessel Head Seal Leak Detection

Pressure between the inner and outer reactor vessel head seal ring is sensed by a pressure transmitter. If the inner seal fails, the pressure at the pressure transmitter is the vessel pressure and the associated trip unit will trip and actuate an annunciator. The plant will continue to operate with the outer seal as a backup, and the inner seal can be repaired at the next outage when the head is removed. If both the inner and outer head seals fail, the leak will be detected by an increase in drywell temperature and pressure.

7.7.1.1.3.1.6 Safety/Relief Valve Seat Leak Detection

Thermocouples are located in the discharge exhaust pipe of the safety/relief valve. The temperature signal goes to a multipoint recorder with an alarm and will be activated by any temperature in excess of a set temperature signaling that one of the safety/relief valve seats has started to leak.

7.7.1.1.3.1.7 Other Instruments

(1) The steam temperature is measured and is transmitted to the main control room.

(2) The feedwater temperature is measured and transmitted to the main control room.

7.7.1.1.3.2 Testability

Pressure, differential pressure, water level, and temperature readout instruments are located outside the drywell and are installed so that calibration and test signals can be applied during reactor operation, if desired.

7.7.1.1.4 Environmental Considerations

There are no special environmental considerations for the instruments described in this subsection.

7.7.1.1.5 Operational Considerations

7.7.1.1.5.1 General Information

The reactor vessel instrumentation discussed in this subsection is designed to augment the existing information from the engineered safeguards and safety systems such that the operator can start up, operate at power, shut down, and service the reactor vessel in an efficient manner. None of this instrumentation is required to initiate any engineered safeguard or safety system.

7.7.1.1.5.2 Reactor Operator Information

The information that the operator has at his disposal from the instrumentation discussed in this subsection is discussed below:

(1) The shutdown flooding water level is indicated in the main control room.

(2) The core plate differential pressure is recorded on one pen of a two pen recorder. The second pen is used for total core flow.

(3) The jet pump developed head is indicated at a local instrument panel.

(4) The reactor pressure is indicated at two local racks in the containment by pressure gages.

(5) The reactor head seal leak detection system turns on an annunciator when the inner reactor head seal fails.

(6) The discharge temperatures of all the safety/relief valves are shown on a multipoint recorder in the main control room. Any temperature point that has exceeded the trip setting will turn on an annunciator indicating that a safety/relief valve seat has started to leak.

(7) The upset water level is recorded in the main control room.

(8) The wide water level range and reactor pressure are recorded in the main control room, and indicated at two local racks in the containment.

(9) The RPV head flange, bottom head, shell flange, and bottom head drain temperatures are recorded in the main control room. An annunciator is actuated by temperature above a preset limit.

(10) The steam line temperature is transmitted to the main control room and is available for monitoring.

(11) The feedwater temperature is transmitted to the main control room and is available for monitoring by the Nuclenet computers.

(12) Reactor vessel temperature is recorded in the main control room.

(13) The wide range monitor level is indicated in the main control room.

(14) Steam line drain temperature is indicated on a local instrument panel.

7.7.1.1.5.3 Set Points

The annunciator alarm set points for the reactor head seal leak detection and safety/relief valve seat leak detection are set so the sensitivity to the variable being measured will provide adequate information.

Figure 7.7-1 includes a chart showing the relative indicated water levels at which various automatic alarms and safety actions are initiated. Specific level values are provided by the

Operational Requirements Manual. The following list references where various level measuring components and their set points are discussed.

(1) Level transmitters and trip units for initiating scram are discussed in Subsection 7.2.1.1.

(2) Level transmitters and trip units for initiating containment or vessel isolation are discussed in Subsection 7.3.1.1.2.

(3) Level transmitters and trip units used for initiating HPCS, LPCI, LPCS and ADS and for terminating HPCS flow are discussed in Subsection 7.3.1.1.1.

(4) Level transmitters and trip units used to initiate RCIC and the level transmitters and trip units used to shut down the RCIC pump drive turbine are discussed in Subsection 7.4.1.1.

(5) Level trips to initiate various alarms and trip the main turbine and the feedpumps are discussed in Subsection 7.7.1.4.

7.7.1.2 Rod Control and Information System (RCIS) - Instrumentation and Controls

7.7.1.2.1 System Identification

7.7.1.2.1.1 General

The objective of RCIS is to provide the operator with the means to make changes in nuclear reactivity so that reactor power level and power distribution can be controlled. The system allows the operator to manipulate control rods.

RCIS instrumentation and controls consists of the electrical circuitry, switches, indicators, and alarm devices provided for operational manipulation of the control rods and the surveillance of associated equipment.

This system includes the interlocks that inhibit rod movement (rod block) under certain conditions. RCIS does not include any of the circuitry or devices used to automatically or manually scram the reactor; these devices are discussed in Section 7.2, "Reactor Protection System." In addition, the mechanical devices of the control rod drives and the control rod drive hydraulic system are not included in RCIS. The latter mechanical components are described in the Subsection 4.1.3, "Reactivity Control Systems."

7.7.1.2.1.2 Classification

This system is a power generation system, and is classified as not related to safety. Certain portions of the system pertaining to rod pattern control are classified as essential.

7.7.1.2.1.3 Reference Design

Table 7.1-2 lists reference design information. RCIS is an operational system with some safety functions. It is functionally identical to the referenced system.

7.7.1.2.2 Power Sources

RCIS receives its power from the 120 Vac instrumentation buses, and A and B buses. Each of these buses receives its normal power supply from the appropriate 480 Vac power system. (See Subsection 8.3.1, A-C Power Systems.)

7.7.1.2.3 Equipment Design

7.7.1.2.3.1 General

The following discussions examine the control rod movement instrumentation, the control aspects of the subject system, and the control rod position information system aspects. The control descriptions include:

(1) Control Rod Drive Control System

(2) Control Rod Drive Hydraulic System

(3) Rod Block Interlocks

The position descriptions include:

(1) Rod Position Probes

(2) Display Electronics

Drawing M05-1078 shows the layout of the control rod drive hydraulic system. Drawing E02-1RD99 shows the devices for the control of components in the control rod drive hydraulic system. Although the figures also show the arrangement of scram devices, these devices are not part of RCIS. Control rods are moved by admitting water, under pressure from a control rod drive water pump, into the appropriate end of the control rod drive cylinder. The pressurized water forces the piston, which is attached by a connecting rod to the control rod, to move. Three modes of control rod operation are used: insert, withdraw and settle. Four solenoid-operated valves are associated with each control rod to accomplish the actions required for the operational modes. The valves control the path that the control rod drive water takes to the cylinder. The control rod drive control system, a subsystem of RCIS, controls the valves.

7.7.1.2.3.2 Rod Movement Controls

7.7.1.2.3.2.1 Control Rod Drive Control System

7.7.1.2.3.2.1.1 Introduction

When the operator selects a control rod for motion and operates the rod insertion control switch as shown in Figure 7.7-5, messages are formulated in the A and B portions of the rod drive control system. A comparison test is made of these two messages, and identical results confirmed; then a serial message in the form of electrical pulses is transmitted to all hydraulic control units (HCU). The message contains two portions, (1) the identity or "address" of the selected HCU, and (2) operation data on the action to be executed. Only one HCU responds to this transmission; it proceeds to execute the rod insertion commands for example. Hence, the

two insert valves for the selected rod open, and allow the control rod drive water to follow a path that results in control rod insertion. In the ganged rod mode, up to 4 HCUs will respond.

On receipt of the transmitted signal as shown in Figure 7.7-5, the responding HCU transmits three portions of a message back to the control room for comparison with the original message:

(1) its own hard-wire identity "address",

(2) its own operations currently being executed, and

(3) status indications of valve positions, accumulator conditions, and test switch positions.

In a similar manner, rod withdrawal is accomplished by formulating a message containing a different operation code. The responding HCU decodes the message and proceeds to execute the withdrawal command by operation of HCU valves shown in Drawing M05-1078.

In either rod motion direction, the Division 1 and Division 2 messages are formulated and compared each millisecond and, if they agree, the comparison message is transmitted to the HCU selected by the operator. Continued rod motion depends on receipt of a train of sequential messages because the HCU insert, withdraw, and settle valve control circuits are ac-coupled. The system must operate in a dynamic manner to effect rod motion. Postulated failures within the rod control and information system generally will result in a static condition within the system, which will prevent further rod motion.

Any disagreement between the Division 1 and Division 2 formulated messages or the acknowledge responding echo message will prevent further rod motion. However, electrical noise disruptions will have only a momentary effect on the system in proportion to the duration of the offending source. Correct operation of the system will resume when the noise source ceases.

In Figure 7.7-5a, three action loops of the solid-state rod control and information system are depicted:

(1) The high speed loop (0.0002-sec duration) services the control rod selected by the operator to transmit action commands and receive status indications.

(2) The medium speed loop (0.045-sec duration) monitors the other control rods in the reactor, one at a time, to update their status display.

(3) The low speed loop (on the order of 20 to 100-sec duration) exercises one HCU at a time to ensure correct execution of actions commanded. This provides for a continuous, periodic self-test of the rod control and information system.

The rod selection circuitry is arranged so that a rod selection is sustained until either another rod is selected or separate action is taken to revert the selection circuitry to a no-rod-selection condition. Initiating movement of the selected rod prevents the selection of any other rod until the movement cycle of the selected rod has been completed. Reversion to the no-rod-selected condition is not possible (except for loss of control circuit power) until any moving rod has completed the movement cycle.

The direction in which the selected rod moves is determined by the position of four switches located on the reactor control panel. These four switches, INSERT, WITHDRAW, CONT WITHDRAW and IN TIMER SKIP are pushbuttons which return by spring action to an off position.

7.7.1.2.3.2.1.2 Insert Cycle

Following is a description of the detailed operation of RCIS during an insert cycle. The cycle is described in terms of the insert, withdraw, and settle commands emanating from RCIS. The response of a selected rod when the various commands are transmitted has been explained previously. Refer to Figure 7.7-5 for an overview of the control system.

With a control rod selected for movement, depressing the INSERT switch and then releasing the switch energizes the insert command for a limited time. Just before the insert command is removed, the settle command is automatically energized and remains energized for a limited time. The insert command time setting and the rate of drive water flow provided by the control rod drive hydraulic system determine the distance traveled by a rod. The tie setting results in a one-notch (6-in.) insertion of the selected rod for each momentary application of a rod-in signal from the rod movement switch.

Continuous insertion of a selected rod can be achieved by holding the INSERT pushbutton in the depressed position. Continuous insertion can also be achieved by holding the IN TIMER SKIP pushbutton in the depressed position. The use of the IN TIMER SKIP function bypasses the normal rod motion timer circuitry.

7.7.1.2.3.2.1.3 Withdraw Cycle

Following is a description of the detailed operation of the reactor manual control system during a withdraw cycle. The cycle is described in terms of the insert, withdraw, and settle commands. The response of a selected rod when the various commands are transmitted has been explained previously. Refer to Figure 7.7-5 for an overview of the control system.

With a control rod selected for movement, depressing the WITHDRAW switch energizes the insert valves for a short time. Energizing the insert valves at the beginning of the withdrawal cycle is necessary to allow the collet fingers to disengage the index tube. When the insert valves are deenergized, the withdraw and settle valves are energized for a controlled period of time. The withdraw valve is deenergized before motion is complete; the drive then settles until the collet fingers engage. The settle valve is then deenergized, completing the withdraw cycle. This withdraw cycle is the same whether the withdraw switch is held continuously or momentarily depressed position. The timers that control the withdraw cycle are set so that the rod travels one notch (6-in.) per cycle. Provisions are included to prevent further control rod motion in the event of timer failure.

A selected control rod can be continuously withdrawn if the WITHDRAW switch is held in the depressed position at the same time that the CONT WITHDRAW switch is held in the depressed position. With both switches held in these positions, the withdraw and settle commands are continuously energized.

7.7.1.2.3.2.1.4 Ganged Rod Motion

In the ganged rod mode of operation, more than one rod may be moved at a time. This mode of operation facilitates plant startup. Ganged rod movement can be used for either INSERT or WITHDRAWAL and the operation of the HCUs is the same as described for the withdraw and insert cycle. Ganged rod movement can be initiated at any power level and is subject to the constraints of the rod pattern control system.

To initiate ganged rod movement, the operator pushes a mode selector pushbutton switch located on the operator control module in the GANG DRIVE position. To select a gang of rods for motion the operator can select any rod in that gang and the other rods in the gang are automatically selected. There are 1, 2, 3 or 4 rods in a gang. The selected gang may be inserted or withdrawn in either the notch mode or the continuous mode. Movement of the selected gang of rods is accomplished the same as discussed in Subsections 7.7.1.2.3.2.1.2 and 7.7.1.2.3.2.1.3.

The positions of all rods in a gang are continuously monitored by both channels of rod position indication systems RPIS and rod pattern control system. From 75% rod density to approximately 16.7% reactor power, gang motion is blocked when any rod in a gang is beyond a given notch position before the other rods in the gang reach the same notch position.

7.7.1.2.3.2.2 Control Rod Drive-Hydraulic System

One motor-operated pressure control valve, two air-operated flow control valves, and four pairs of solenoid-operated stabilizer valves are included in the control rod drive hydraulic system to maintain smooth and regulated system operation. These devices are shown in Drawing M05-1078. The motor operated pressure control valve is positioned by a control switch located in close proximity to the system pressure indicators in the main control room. One of the two flow control valves is in service and is automatically positioned in response to signals from an upstream flow measuring device.

The stabilizer valves are automatically controlled by the energization of the insert and withdraw commands. The control scheme is shown in drawing E02-1RD99. There are two drive water pumps which are controlled by switches in the main control room. Each pump automatically stops on indication of low suction pressure.

7.7.1.2.3.2.3 Rod Block Trip System-Instrumentation and Controls

A portion of RCIS, upon receipt of input signals from other systems and subsystems, inhibits movement or selection of control rods.

7.7.1.2.3.2.3.1 Grouping of Channels

The same grouping of neutron monitoring equipment (SRM, IRM, and APRM) that is used in RPS is also used in the rod block circuitry.

Half of the total monitors (SRM, IRM, and APRM) provide inputs to one of the RCIS rod block logic circuits and the remaining half provide inputs to the other RCIS rod block logic circuit. Scram discharge volume high water level signals are provided as inputs into each of the two rod block logic circuits. Both rod block logic circuits sense when the high water level trip for the scram discharge volume is bypassed.

The APRM rod block setting is varied as a function of recirculation flow. Analyses show that the selected setting is sufficient to avoid reactor protection system action. Mechanical switches in the SRM and IRM detector drive systems provide the position signals used to indicate that a detector is not fully inserted. Additional detail on all the neutron monitoring system trip channels is available in Subsection 7.6.1.5, "Neutron Monitoring System." Two level transmitters installed on the scram discharge volume (SDV) provide high water level signals to two trip units to provide rod block signals. The same level transmitters provide control room annunciation, through two additional trip units, of increasing SDV water level below the level at which rod block occurs.

7.7.1.2.3.2.3.2 Rod Block Functions

The following discussion describes the various rod block functions and explains the intent of each function. The instruments used to sense the conditions for which a rod block is provided are discussed later. The rod block functions provided specifically for refueling situations are described in subsection 7.6.1.1, "Refueling Interlocks System."

(1) With the mode switch in the SHUTDOWN position, no control rod can be withdrawn. This enforces compliance with the intent of the shutdown mode.

(2) The circuitry is arranged to initiate a rod block regardless of the position of the mode switch for the following conditions:

a. The rod selected for withdrawal violates the acceptable rod pattern determined by the rod pattern control system. The purpose of the rod pattern control system is to limit the worth of any control rod such that no undesirable effects will result from a rod drop accident or a rod withdrawal error. The rod pattern control system will enforce operational procedural controls by applying rod blocks before any rod motion can produce high worth rod patterns.

b. A substitute position violation exists or a substitute position violation between channels exists. This assures that no control rod can be withdrawn unless the rod position information is valid.

(3) With the mode switch in the RUN, STARTUP, or REFUEL positions, any of the following conditions initiates a rod block:

a. Any average power range monitor (APRM) upscale rod block alarm. The purpose of this rod block function is to avoid conditions that would require reactor protection system action if allowed to proceed. The APRM upscale rod block alarm setting is selected to initiate a rod block before the APRM high neutron flux scram setting is reached.

b. Any APRM inoperative alarm. This assures that no control rod is withdrawn unless the average power range neutron monitoring channels are either in service or correctly bypassed.

c. Any APRM downscale or flow reference upscale alarm and mode switch in "RUN" mode. This assures that no control rod will be withdrawn during

power range operation unless the average power range neutron monitoring channels are operating correctly or are correctly bypassed.

d. Scram discharge volume high water level. This assures that no control rod is withdrawn unless enough capacity is available in the scram discharge volume to accommodate a scram. The setting is selected to initiate a rod block earlier than the scram that is initiated on scram discharge volume high water level.

(4) With the mode switch in the STARTUP or REFUEL position, any of the following conditions initiates a rod block:

a. Any source range monitor (SRM) detector not fully inserted into the core when the SRM count level is below the retract permit level and any IRM range switch on either of the two lowest ranges. This assures that no control rod is withdrawn unless all SRM detectors are correctly inserted when they must be relied on to provide the operator with neutron flux level information.

b. Any SRM upscale level alarm. This assures that no control rod is withdrawn unless the SRM detectors are correctly retracted during a reactor startup. The rod block setting is selected at the upper end of the range over which the SRM is designed to detect and measure neutron flux.

c. Any SRM downscale alarm. This assures that no control rod is withdrawn unless the SRM count rate is above the minimum prescribed for low neutron flux level monitoring.

d. Any SRM inoperative alarm. This assures that no control rod is withdrawn during low neutron flux level operations unless neutron monitoring capability is available in that all SRM channels are in service or correctly bypassed.

e. Any intermediate range monitor (IRM) detector not fully inserted into the core. This assures that no control rod is withdrawn during low neutron flux level operations unless proper neutron monitoring capability is available in that all IRM detectors are correctly located.

f. Any IRM upscale alarm. This assures that no control rod is withdrawn unless the intermediate range neutron monitoring equipment is correctly upranged during a reactor startup. This rod block also provides a means to stop rod withdrawal in time to avoid conditions requiring reactor protection system action (scram) in the event that a rod withdrawal error is made during low neutron flux level operations.

g. Any IRM downscale alarm except when range switch is on the lowest range. This assures that no control rod is withdrawn during low neutron flux level operations unless the neutron flux is being correctly monitored. This rod block prevents the continuation of a reactor startup if the operator upranges the IRM too far for the existing flux level. Thus, the

rod block ensures that the intermediate range monitor is on scale if control rods are to be withdrawn.

h. Any IRM inoperative alarm. This assures that no control rod is withdrawn during low neutron flux level operations unless neutron monitoring capability is available in that all IRM channels are in service or are correctly bypassed.

i. The refueling platform is over the core. This assures that no control rod is withdrawn while work is taking place over the core.

(5) With the mode switch in the REFUEL position, the following conditions initiate a rod block:

a. Grapple loaded. This assures that no control rod is withdrawn during refueling.

b. Scram discharge volume high water level scram trip bypassed. This assures that no control rod is withdrawn while the scram discharge volume high water level scram function is out of service.

7.7.1.2.3.2.3.3 Rod Block Bypasses

To permit continued power operation during repair or calibration of equipment for selected functions that provide rod block interlocks, a limited number of manual bypasses are permitted as follows:

For the SRM see Subsection 7.7.1.22.1.2
For the IRM see Subsection 7.6.1.5.4.1.1.1
For the APRM see Subsection 7.6.1.5.6.1.2

An automatic bypass of the SRM detector position rod block is effected as the neutron flux increases beyond a preset low level on the SRM instrumentation. The bypass allows the detectors to be partially or completely withdrawn as a reactor startup is continued.

7.7.1.2.3.2.3.4 Rod Block Interlocks

Drawing E02-1NR99 shows the rod block interlocks used in the RCIS. Drawing E02-1NR99 also details the rod blocking functions that originate in the neutron monitoring system.

7.7.1.2.3.2.3.5 Redundancy

To achieve an operationally desirable performance objective where most failures of individual components would be easily detectable or would not disable the rod movement inhibiting functions, the rod block logic circuitry is arranged as two redundant and separate logic circuits. These circuits are energized when control rod movement is allowed. Each logic circuit receives input trip signals from a number of trip channels and each logic circuit can provide a separate rod block signal to inhibit rod withdrawal.

The output of each logic circuit is coupled to a comparator by the use of isolation devices in the rod drive control cabinet. The formulated A and B signals are compared and rod blocks applied

when either A or B trip signals are present. Rod withdrawal is permitted only if the two signals agree at all times. Because the transmitted signals are dynamic and vary with time, any RCIS failure that interrupts the dynamic signals transmitted to the hydraulic control units will prevent further control rod motion. Hence, failures consisting of short circuits, open circuits, loss of circuit continuity, loss of power, or cards or instruments out of file will inhibit rod movement.

The rod block circuitry is effective in preventing rod withdrawal, if required, during both normal (notch) withdrawal and continuous withdrawal. If a rod block signal is received during a rod withdrawal, the control rod is automatically stopped at the next notch position, even during a continuous rod withdrawal. It is designed so that no single failure can prevent a rod block.

The components used to intiate rod blocks in combination with refueling operations provide rod block trip signals to these same rod block circuits. These refueling rod blocks are described in Subsection 7.6.1.1, "Refueling Interlocks System".

7.7.1.2.3.2.3.6 Testability

On-line testability of the systems and indication of bypassed or inoperable status of the system is provided.

7.7.1.2.3.2.3.7 Environmental Considerations

The equipment is qualified by tests or analyses to meet the environmental conditions in Table 3.11-5. The equipment is mounted in the main control room and will not see design basis accident or anticipated operational occurrence environments.

7.7.1.2.3.2.3.8 Operational Considerations

The rod block trips prevent an operator from withdrawing rods if the associated equipment is not capable of monitoring core response or, if unchecked, the withdrawals might require a protective system action (scram). There are no special operational considerations.

7.7.1.2.3.2.4 Testability

In addition to the periodic self-test mode of system operation, the RCIS circuitry can be routinely checked for correct operation by manipulating control rods using the various methods of control. Detailed testing and calibration can be performed by using standard test and calibration procedures for the various components of the RCIS circuitry.

7.7.1.2.3.3 Rod Position Information

This subsystem includes the rod position probes and the electronic hardware that process the probe signals and provide the data described above.

7.7.1.2.3.3.1 Position Probes

Control rod position information is obtained from reed switches in the control rod drive that open or close as a magnet attached to the rod drive piston passes during rod movement. Reed switches are provided at each 3-in. increment of piston travel. Because a notch is 6 inches, indication is available for each half-notch of rod travel. The reed switches located at the half-notch positions for each rod are used to indicate rod drift. Both a rod selected for movement

and the rods not selected for movement are monitored for drift. A drifting rod is indicated by an alarm and indicator in the main control room. The rod drift condition is also monitored by PMS.

Reed switches are also provided at locations that are beyond the limits of normal rod movement. If the rod drive piston moves to the withdrawn overtravel position, an alarm is sounded in the main control room. The overtravel alarm provides a means to verify that the drive-to-rod coupling is intact because, with the coupling in its normal condition, the drive cannot be physically withdrawn to the overtravel position. Coupling integrity can be checked by attempting to withdraw the drive to the overtravel position. All position data for each rod are arranged in two 11-wire (5 by 6) matrices for transmission to the main control room. See Figure 7.7-6.

Each control rod drive has two complete sets of reed switches for redundant indication of all the information specified above. These two sets of switches are electronically and mechanically separate within a common enclosure.

7.7.1.2.3.3.2 Position Indication Electronics (Two Channels)

The electronics consists of a set of "probe multiplexer cards" (one per 4-rod group where the 4-rod group is the same as the display grouping described above), a set of "file control cards" (one per 10 multiplexer cards), and one set of master control and processing cards serving the whole system. All probe multiplexer cards are the same except that each has a pair of plug-in "daughter cards" containing the identity code of one 4-rod group (the probes for the corresponding 4 rods are connected to the probe multiplexer card).

7.7.1.2.3.3.3 System Operation (Each Channel)

The system operates on a continuous scanning basis with a complete cycle every 45 milliseconds. The operation is as follows: the control logic generates the identity code of one rod in the set, and transmits it using time multiplexing to all of the file control cards. These in turn transmit the identity with timing signals to all of the probe multiplexer cards. The one multiplexer card with the matching rod identity will respond and transmit its identity (locally generated) plus the "raw" probe data for that rod back through the file control card to the master control and processing logic. The processing logic does several checks on the returning data. First, a check is made to verify that an answer was received. Next, the identity of the answering data is checked against that which was sent. Finally, the format of the data is checked for legitimacy. [Only a single even position or, full-in plus position "00", or full-out plus position "48," or odd, or overtravel, or blank (no switch closed) are legitimate. Any other combination of switches is flagged as a fault.]

If the data passes all of these tests, it is encoded and transmitted in multiplexed form to the main control room for display in the main control panel and loaded into a memory to be read by PMS as required.

As soon as one rod's data is processed, the next rod's identity is generated and processed and so on for all of the rods. When data for all rods has been gathered, the cycle repeats.

7.7.1.2.4 Environmental Considerations

The rod control and information system (control and position indication circuitry) is not required for any plant safety function, nor is it required to operate in any associated design basis

accident or transient occurrence. The rod control and information circuitry is required to operate only in the normal plant environments during normal power generation operations.

The control rod drive hydraulic control units and control rod position multiplexers are located outside the drywell in the containment.

The logic, control units, and readout instrumentation are located in the main control room.

The control rod drives and position detectors are located beneath the reactor vessel in the drywell.

7.7.1.2.5 Operational Considerations

7.7.1.2.5.1 General Information

RCIS is totally operable from the main control room. Rod position indicators, described below, provide the necessary information to ascertain the operating state and position of all control rods. Conditions which prohibit control rod insertion are alarmed with the rod block annunciator.

7.7.1.2.5.2 Reactor Operator Information

Table 7.7-1 gives information on instruments for the Control Rod Drive Hydraulic system. A large rod information display on the principal plant console is patterned after a top view of the reactor core. (See Figure 7.5-2.) The display allows the operator to acquire information rapidly by scanning. The following information for each control rod is presented in the display:

Rod fully inserted
Rod fully withdrawn
Selected rod identification
Rod position (numeric) of selected rod or rods

Also dispersed throughout the display, in locations representative of the physical location of LPRM strings in the core, are LPRM indicators as follows:

LPRM downscale
LPRM upscale

The following indications are displayed in a "on demand" function as selected by the operator:

Accumulator trouble
Rod scram
Rod drift
Rod position (numeric) of all rods.
Rods with data faults
Substitute positions
Rod drives bypassed
Improper scram valve position
Rod position bypassed
LPRMs bypassed
Rods with insert permissive
Rods with withdrawal permissive

A continuous core rod position display is provided from both of the rod position information system cabinets. The data for the display is automatically alternated between the two RPIS outputs at a rate that is visible to the operator so that position data faults are easily detected.

A separate, smaller display below the full core status display provides the LPRM reading adjacent to the selected rod. The associated LPRM string for each rod in a gang may be selected and displayed so that the operator can easily observe proper motion of the gang rods. Proper gang motion can be further confirmed by observing rod position changes indicated by the full core display.

The position signals of selected control rods, together with a rod identification signal, are provided as inputs to the on-line performance monitoring system. The acquisition of the rod position signal does not interrupt the rod position indication signal in the main control room. The performance monitoring system can, on demand, provide a full core printout of control rod positions.

The following main control room lights are provided to allow the operator to know the conditions of the control rod drive hydraulic system and the control circuitry:

Insert command energized
Withdraw command energized
Settle command energized
Insert not permissive
Withdrawal not permissive
Insert required
Continuous withdrawal
Pressure control valve position
Flow control valve position
Drive water pump low suction pressure (alarm and pump trip)
Drive water filter high differential pressure (alarm only)
Charging water (to accumulator) low pressure (alarm only)
Control rod drive temperature (alarm only)
Scram discharge volume not drained (alarm only)
Scram valve pilot air header high/low pressure (alarm only)

7.7.1.2.5.3 Set Points

The subject system has no safety set points.

7.7.1.3 Recirculation Flow Control System - Instrumentation and Controls

7.7.1.3.1 System Identification

7.7.1.3.1.1 General

The objective of the recirculation flow control system is to control reactor power level, over a limited range, by controlling the flow rate of the rector recirculating water.

The recirculation flow control system consists of the electrical circuitry, switches, indicators, motors and alarm devices provided for operational manipulation of the recirculation flow control valves, low frequency M-G (LFMG) sets, and the surveillance of associated equipment.

Recirculation flow control is by manual operation, when the plant is operating on a rod pattern where rated power is produced with rated recirculation flow. During periods of low power operation, such as plant startup and shutdown, the recirculation pump and motor will be powered by the LFMG set and will operate at approximately 25% rated full load speed.

7.7.1.3.1.2 Classification

This system is a power generation system and is classified as not required for safety.

7.7.1.3.1.3 Reference Design

Table 7.1-2 lists reference design information. The recirculation flow control system is an operational system and has no safety function; therefore, there are no safety differences between this system and those of the above referenced facilities. The subject system is functionally identical to the referenced system.

7.7.1.3.2 Power Sources

Normal

The recirculation flow control system power is supplied by two non-essential 120 VAC instrument buses. Flow control loop A is powered from one bus and flow control loop B from the other bus. Each bus receives its normal power supply from the appropriate 480 Vac normal auxiliary power system. The LFMG sets (one for each recirculation loop) are supplied power from the AC auxiliary power system. (See Subsection 8.3.1, A-C Power Systems)

Alternate

On loss of normal auxiliary power, the startup transformer provides backup power to the 480 Vac normal auxiliary power systems.

7.7.1.3.3 Equipment Design

7.7.1.3.3.1 General

Reactor recirculation flow is varied by throttling the recirculation pumps discharge with control valves. The recirculation pumps operate at constant speed, on either LFMG or normal 60-cycle power. By adjusting the position of the discharge throttling valves, the recirculation system can change the reactor power level (drawing E02-1RR99 and Figure 7.7-7b).

Control of core flow is such that, at various control rod patterns, different power level changes can be accommodated. For a rod pattern where rated power accompanies 100% flow, power can be reduced to approximately 75% of full power by manual flow variation. At other rod patterns, manual power control is possible.

An increase in recirculation flow temporarily reduces the void content of the moderator by increasing the flow of coolant through the core. The additional neutron moderation increases reactivity of the core, which causes reactor power level to increase. The increased steam generation rate increases the steam volume in the core with a consequent negative reactivity effect, and a new steady-state power level is established. When recirculation flow is reduced, the power level is reduced in the reverse manner.

Each flow control valve has its individual manual control system.

7.7.1.3.3.2 Pump Motor Control

The pump drive motor is a four pole ac induction motor that will operate from the normal plant electrical supply during normal plant power operation. At plant low-power levels, the recirculation pump/motor will operator from the electrical output of the low-frequency motor generator (LFMG) set. Since the LFMG set electrical output frequency is at approximately one-fourth the normal plant electrical frequency, the recirculation pump/motor will be driven at approximately one-fourth of its rated speed.

The LFMG set is not intended to be capable of starting the recirculation pump/motor with the pump/motor initially at zero speed. At low reactor power levels, the pump/motor start is initiated on the normal plant electrical power supply. As the pump/motor speed approaches rated full load speed, it is automatically tripped. When the pump/motor speed coastdown is about 25% of rated full load speed, the pump/motor will be reenergized from the LFMG set and driven at about 25% rated full load speed. Preceding initiation of the pump/motor, the plant operator may manually start the LFMG set. If the LFMG set is not operating when the pump/motor start is initiated, the LFMG will be automatically started.

If pump/ motor start is initiated at higher reactor power levels, the LFMG set will not start automatically, and the pump/motor will continue to operate at rated full load speed.

Certain trip functions, as defined in drawing E02-1RR99, will trip the pump/motor and automatically transfer it to the LFMG set. Other trip functions will trip the pump/motor without transfer to the LFMG set.

In addition to the normal drive motor trips, a high vessel pressure or low vessel level will initiate trips of the recirculation pump motors and the LFMG sets through the ATWS/RPT function. See Subsections 7.7.1.25.1 and 7.7.1.25.2. Each trip sensor and channel is separate and independent from the reactor protection system, and includes a testability feature that will allow testing of each trip sensor while the recirculation system is in operation. The "in test" position of the test switch is annunciated.

7.7.1.3.3.3 Low Frequency Motor-Generator (LFMG) Set

The LFMG set consists of a 16-pole ac induction motor driving a 4-pole ac synchronous generator through a flexible coupling. This arrangement provides one-quarter normal plant frequency at the output of the generator. The generator exciter is directly connected to the generator to provide a brushless excitation system. The voltage regulator for the excitation system is located in the auxiliary relay panel which is separate from the LFMG set.

Several permissives, described on drawing E02-1RR99, must be satisfied before the recirculation pump/motor can be operated from either the normal plant electrical system or the LFMG set. These permissives prohibit pump start until conditions assure there will be no damage to the system. Section 4.4.3 describes the regions of the operational map where operation is not permitted.

7.7.1.3.3.4 Valve Position Control Components

The main flow regulating valves are controlled individually. There are two separate sets of control system components, one for each valves, which are: a manual/automatic transfer station with the automatic function not usable, an error limiter, a position controller, a high-low signal failure alarm, a loss of signal valve "motion inhibit" interlock, a valve actuator, and a limiter. The limiter closes the main flow regulating valve if one of the reactor feed pumps should trip, with a coincident or subsequent reactor vessel low water level (runback).

A drywell pressure transmitter which is independent of any safety related transmitters, is actuated when the drywell pressure increases to a level indicative of a LOCA. During normal operation, actuation of the pressure transmitter circuit will actuate the "motion inhibit" interlock to the flow control valve so that its position cannot be changed. This circuit can be tested during operation by placing the drywell high pressure test switch in the test position and externally applying pressure to the transmitter. Lockup of the flow control valve will occur during test. However, the hydraulic system for the flow control valve will not be shutdown as will occur during an actual disturbance. The position of the test switch is annunciated.

7.7.1.3.3.4.1 Master Controller

Deleted

7.7.1.3.3.4.2 Flux Demand Limiter

Deleted

7.7.1.3.3.4.3 Flux Controller

Deleted

7.7.1.3.3.4.4 Drive Flow Limiter

Deleted

7.7.1.3.3.4.5 Flux Feedback Isolation Amplifier

Deleted

7.7.1.3.3.4.6 Manual/Automatic Transfer Stations

Manual operation is done on the individual flow controllers, using a manually operated switch.

7.7.1.3.3.4.7 Flow Controller

The individual flow controller (one for each valve) transmits the signal that adjusts the valve position. Each flow regulating valve can be manually positioned with the manual output signal raise/lower lever provided on each flow controller.

7.7.1.3.3.4.8 Limiter

A limiting function is required (as briefly discussed in Subsection 7.7.1.3.3.4). Electronic limiting, with reasonable range adjustment, is provided in each main flow control loop. This

limiter is normally held bypassed by auxiliary devices such as relay contacts. When the limiting permissive condition is reached, the main regulating valve control signal is limited to close the valve to the desired position.

7.7.1.3.3.4.9 Valve Actuator

The valve actuator (one on each valve) is the electro-hydraulic device that moves the flow control valve to the desired position and maintains it there. The valve control system is designed to maintain the valve in the last position demanded if control power is lost.

The valve actuator has an inherent rate limiting feature that will keep the resulting rate of change of core flow and power to within safe limits in the events of an upscale or downscale failure of the valve position control system.

7.7.1.3.3.5 Testability

The error signal limiting network, valve position controller, feedback proportional amplifier, and valve actuator are functioning during normal power operation. Any abnormal operation of these components can be detected during operation. The components that do not continuously function during normal operation can be tested and inspected for calibration and operability during scheduled plant shutdown. All the recirculation flow control system components are tested and inspected according to the component manufacturers' recommendations.

7.7.1.3.4 Environmental Considerations

The recirculation flow control system is not required for safety purposes, nor required to operate during or after any design basis accident. The system is required to operate in the normal plant environment for power generation purposes only.

The recirculation flow control equipment in the drywell, namely, the hydraulic actuator and pump isolation valve motors, is subject to the environment under design conditions listed in Table 3.11-5.

The logic, control units and instrumentation terminals are located in the main control room and subject to the normal control room environment as listed in Table 3.11-5.

7.7.1.3.5 Operational Considerations

7.7.1.3.5.1 General Information

Controllers for positioning the flow control valve are located in the main control room. The controllers are manually operated. Control switches for LFMG set, pump/motor, pump isolation valves and interlock reset functions are also located in the main control room. Switches and indicators for control of the flow control valve hydraulic system are located on a back row panel in the main control room for easy accessibility.

Except for the equipment protective interlocks, controls are manual requiring operator action.

The LFMG set is required to supply power to the recirculation pump/motor only during plant low power conditions. Provisions are made to allow operation of the LFMG set independent of pump/motor operation during normal power plant operation as well as during plant shutdown.

7.7.1.3.5.2 Reactor Operator Information

Indication and alarms are provided to keep the operator informed of the status of systems and equipment, and to quickly determine the location of malfunctioning equipment.

Visual display consists of loop flow, valve position, and controller output and input deviation meters. Alarms are provided to alert the operator of malfunctioning control signals, inability to change valve position, condition of the hydraulic system, pump, and motor, and temperatures of cooling water. In most cases alarms are supplemented by light indicators to more closely define the problem area.

Indicating lights are provided to indicate status of the LFMG set and pump/motor control breakers. A pump/motor speed indicator is provided to indicate (in addition to the breaker indicating lights) to the operator which power supply is driving the pump/motor. Alarms are provided to alert the operator of automatic trips and transfers of the pump/motor, malfunctions, and availability of automatic control circuitry.

7.7.1.3.5.3 Set Points

The subject system has no safety set points.

7.7.1.4 Feedwater Control System - Instrumentation and Controls

7.7.1.4.1 System Identification

7.7.1.4.1.1 General

The Feedwater Control System controls the flow of feedwater into the reactor pressure vessel to maintain the water in the vessel within predetermined levels during all normal plant operating modes. The range of water level is based upon the requirements of the steam separators (this includes limiting carryover, which affects turbine performance, and carryunder, which affects recirculation pump operation). The Feedwater Control System employs water level, steam flow, and feedwater flow in a three-element control configuration.

Single-element control is also available based on water level only. Normally, the signal from the feedwater flow is equal to the steam flow signal; thus, if a change in the steam flow occurs, the feedwater flow follows. The change of steam flow signal provides anticipation of the change in water level that will result from change in load. The level signal provides a correction for any mismatch between the steam and feedwater flow which causes the level of the water in the reactor vessel to rise or fall accordingly.

7.7.1.4.1.2 Classification

This system is a power generation system and is classified as not related to safety.

7.7.1.4.1.3 Reference Design

Table 7.1-2 lists reference design information. The feedwater control system is an operational system and has no safety function. Therefore, there are no safety differences between this system and those of the above referenced facilities. The subject system is functionally identical to the referenced system.

7.7.1.4.2 Power Sources

The feedwater level measurement channels are powered by three independent sources such that no single power failure can incapacitate more than one level-sensing channel. Power for two of the three level-sensing channels is supplied through inverters from the plant battery supplies and the other channel is powered from one of the 120 Vac instrumentation power buses.

7.7.1.4.3 Equipment Design

7.7.1.4.3.1 General

During normal plant operation, the feedwater control system automatically regulates feedwater flow into the reactor vessel. The system can be manually operated. (See drawing E02-1FW99.)

The feedwater flow control instrumentation measures the water level in the reactor vessel, the feedwater flow rate into the reactor vessel, and the steam flow rate from the reactor vessel. During three element control operation, these three measurements are used for controlling feedwater flow.

The optimum reactor vessel water level is determined by the requirements of the steam separators. The separators limit water carry-over in the steam going to the turbines and limit steam carry-under in water returning to the core. The water level in the reactor vessel is maintained within ±1.5 in. of the set point value during normal operation and within the high and low level trip set points during normal plant maneuvering transients. This control capability is achieved during plant load changes by balancing the mass flow rate of feedwater to the reactor vessel with the steam flow from the reactor vessel. The feedwater flow is regulated by controlling the two turbine-driven feedwater pumps and by varying the position of the control valve on the discharge of the motor driven feed pump to deliver the required flow to the reactor vessel.

7.7.1.4.3.2 Reactor Vessel Water Level Management

Reactor vessel narrow range water level is measured by three identical, independent sensing systems. For each channel, a differential pressure transmitter senses the difference between the pressure caused by a constant reference column of water and the pressure caused by the variable height of water in the reactor vessel. The differential pressure transmitter is installed on instrument sensing lines that serve other systems. (See Subsection 7.7.1.1, "Reactor Vessel Instrumentation".) Two of the differential pressure signals are used for indication and control and the third for indication only. The narrow range level signal from one of the two control channels can be selected by the operator as the signal to be used for feedwater flow control. A third narrow range level sensing channel is used in conjunction with the two control channels to provide failure tolerant trips of the main turbine and feed pump prime movers. All three narrow range reactor level signals and reactor pressure are indicated in the main control room. A fourth level sensing system (upset range) provides level information beyond the span of the narrow range devices. The selected narrow range water level and upset range water level signals are continually recorded in the main control room.

7.7.1.4.3.3 Steam Flow Measurement

Steam flow is sensed at an elbow tap on each mean steam line by a differential pressure transmitter. A signal proportional to the true mass steam flow rate is linearized and indicated in the main control room. The signals are summed to produce a total steam flow signal for indication and feedwater flow control. The total steam flow signal is recorded in the main control room.

7.7.1.4.3.4 Feedwater Flow Measurement

Feedwater flow is sensed at a flow element in each feedwater line by differential pressure transmitters. Each feedwater signal is linearized and then summed to provide a total mass flow signal which is recorded in the main control room. In addition, feedwater flow through each pump is sensed at a point downstream of the feed pump discharge. After being linearized, the flow is compared to the demand flow for that pump. Resulting error is used to adjust the actuator in the direction necessary to zero the flow error. Valve position control or turbine speed change are the flow adjustment techniques involved.

7.7.1.4.3.5 Feedwater/Level Control

Three modes of feedwater flow control and thus level control are provided.

(1) Manual

(2) Single element

(3) Three element

Separate level controllers are provided for each automatic mode. Each level controller contains set point deviation meters, an output indicator, a manual output control, manual automatic switching capability and a manually operated set point adjustment. In the single element control mode, measured level is compared to level set point within the controller. The resulting signal is conditioned by the proportional plus integral controller circuits and transmitted to the actuator selected by the operator. In the start up mode, only one actuator is automatically controlled at any time. Any other actuator may be controlled manually through the flow control loop manual-automatic station.

During normal operation three element automatic control is provided. The total steam flow signal, modified by the conditioned level error signal, provides a flow demand signal to the feedwater flow control loop. The demanded flow is compared to actual flow in each active pump. The resulting flow error signal after conditioning by the proportional plus integral flow controller commands the active actuators which have been automatically selected on the flow controller manual-automatic station.

Manual control is available by selecting manual on the controller manual-automatic stations. Flow change is accomplished by depressing the decrease button or the increase button depending on the desired flow change.

Automatic inventory control is available with any single pump or combination of two pumps.

7.7.1.4.3.5.1 Interlocks

The level control system also provides interlocks and control functions to other systems. When one of the reactor feed pumps is lost and coincident or subsequent low water level exists, recirculation flow is reduced to within the power capabilities of the remaining reactor feed pumps. This reduction aids in avoiding a low level scram by reducing the steaming rate. In addition, the sustained low total feedwater flow interlock to the reactor recirculation pumps prevents transfer of the pumps from slow to fast speed or will initiate an automatic transfer from fast speed to slow speed in order to ensure adequate NPSH is available for the recirculation pumps.

Alarms are also provided for (1) high and low water level and (2) reactor high pressure. Interlocks will trip the plant turbine and feedwater pumps in event of high reactor water level.

7.7.1.4.3.6 Feedwater Flow Control

Feedwater is delivered to the reactor vessel through a combination of turbine-driven and electric-motor driven feedwater pumps, which are arranged in parallel. The turbines are driven by steam from the reactor vessel. The electric-motor driven pump operates at constant speed and flow is controlled by a flow control valve. During planned operation, the feedwater control signal from the flow controller is fed to the turbine speed control systems, which adjust the feedwater flow so that it is proportional to the feedwater demand signal. Each turbine can be controlled by its manual/automatic transfer station. If the feedwater control signal is lost, an alarm unit in the feedwater control circuit causes the turbine speed control system to lock the turbine speed "as is" and initiates an alarm in the main control room. The reactor master level control station, and the manual/auto transfer stations associated with each turbine speed controller, are the "bumpless transfer" types.

7.7.1.4.3.7 Testability

All feedwater flow control system components can be tested and inspected according to manufacturers' recommendations. This can be done prior to plant operation and during scheduled shutdowns. Reactor vessel water level signals from the three water level sensing systems are automatically compared during normal operation to detect instrument malfunctions. Steam mass flow rate and feedwater mass flow rate can be compared during constant load operation to detect inconsistencies in their signals. The level controller can be tested while the feedwater control system is being controlled by the manual/automatic transfer stations.

7.7.1.4.4 Environmental Considerations

The feedwater control system is not required for safety purposes, nor is it required to operate after the design basis accident. This system is required to operate in the normal plant environment for power generation purposes only. The reactor feed pumps in the turbine building experience the normal design environments listed in Table 3.11-5.

7.7.1.4.5 Operational Considerations

7.7.1.4.5.1 General Information

The level controller is located in the main control room where, at the operator's discretion, the system can be operated either manually or automatically via the manual/auto control selector.

Manual control of the individual feedwater reactor turbine driven pumps is available to the operator in the main control room. This includes control of any low flow feedwater bypass valve that may be used for startup when steam is not available to run the turbine driven reactor feed pumps.

In event of loss of feedwater, the reactor protection system will cause plant shutdown on reactor low water level thus preventing any further lowering of vessel water level.

7.7.1.4.5.2 Reactor Operator Information

Indicators and alarms, provided to keep the operator informed of the status of the system, are as noted in previous subsections.

7.7.1.4.5.3 Set Points

The subject system has no safety set points.

7.7.1.5 Pressure Regulator and Turbine-Generator System - Instrumentation and Controls

7.7.1.5.1 System Identification

7.7.1.5.1.1 General

One of the features of direct cycle boiling water reactors is the direct passage of the nuclear boiler generated steam through the turbine and regenerative system. In this system the turbine is slaved to the reactor in that all (except steam to the moisture separator reheaters) steam generated by the reactor is normally accepted by the turbine. The operation of the reactor demands that a pressure regulator concept be employed to maintain a constant (within the range of the regulator controller proportional band setting) turbine inlet pressure.

The turbine pressure regulator normally controls the turbine control valves to maintain constant (within the range of the regulator controller proportional band setting) turbine inlet pressure. In addition, the pressure regulator also operates the steam bypass valves such that a portion of nuclear boiler rated flow can be bypassed when operating at steam flow loads above that which can be accepted by the turbine as well as during the startup and shutdown phase.

The overall turbine-generator and pressure control system accomplishes the following:

(1) Control turbine speed and turbine acceleration.

(2) Operate the steam bypass system to keep reactor pressure within limits, and avoid large power transients.

(3) Control main turbine inlet pressure within the proportional band setting of the pressure regulator.

(4) Deleted

7.7.1.5.1.2 Classification

The main turbine-generator control system and pressure control system are classified as primary power generation systems. That is, they are not safety systems but their operation is essential to the power production cycle.

7.7.1.5.1.3 Reference Design

Table 7.1-2 lists reference design information. The subject instrumentation and control system is an operational system and has no safety function. Therefore, there are no safety design differences between this system and those of the reference design facilities. This system is functionally identical to the referenced system.

7.7.1.5.2 Power Sources

7.7.1.5.2.1 Normal

For high plant availability, one set of power supplies to the pressure regulator is fed by a 115 Vac instrument bus, with the other set driven by a 115 Vac non-interruptible instrument bus. Similarly, one set of power supplies to the turbine control system is powered from a 115 Vac housepower, with the other set receiving power from a 115 Vac turbine shaft-driven permanent-magnet generator. For both the pressure regulator controls and the turbine controls, either one of their power sources can sustain operation of the electrical control system.

7.7.1.5.2.2 Alternate

Upon failure of either electrical power source to the pressure regulator or to the turbine controls, there will be no interruption of power flow.

7.7.1.5.3 System Design

7.7.1.5.3.1 General

BWR pressure control is accomplished by controlling main steam pressure immediately upstream of the main turbine stop and control valves through modulation of the turbine-control or steam-bypass valves. Command signals to these valves are generated by redundant control elements using the sensed main steam line pressure signals as the feedback, as shown in Figure 7.7-10. For normal operation, the turbine control valves regulate steam pressure; however, whenever the total steamflow demand from the pressure regulator exceeds the capacity of the turbine control valves, the pressure control system sends the excess steamflow directly to the main condenser, through the steam bypass valves. The plant ability to follow grid-system load demands is enabled by adjusting reactor power level, by varying reactor recirculation flow manually, or by manually moving control rods. In response to the resulting steam production changes, the pressure control system adjusts the turbine control valve to accept the steam output change, thereby regulating steam pressure.

7.7.1.5.3.2 Steam Pressure Control

During normal plant operation steam pressure is controlled by the turbine control valves which are positioned in response to either the pressure regulator signal or the turbine speed-load signal as selected by a "low value gate" circuit: (see Figure 7.7-10).

Two essentially identical pressure regulators are provided. Either regulator may be in normal control with the other serving as a backup. Failure of either regulator will cause that regulator to be automatically switched out or to remain switched out. A separate pressure tap, sensing line, and sensor are provided for each regulator, sensing equalized steam pressure at the turbine inlet.

The turbine control valve (steam flow) demand signal is limited, after passage through the low value gate in Figure 7.7-10, to that required for full opening of the turbine control valves. Thus, if the pressure control system requests additional steam flow be relived from the reactor when the control valves reach wide open, the control signal error to the bypass valves will increase and cause bypass actuation.

7.7.1.5.3.3 Steam Bypass System

The steam bypass equipment is designed to control steam pressure when reactor steam generation exceeds turbine requirements such as during startup (pressure, speed ramping and synchronizing), sudden load reduction, and cooldown.

The bypass capacity of the system is 28.8% of NSSS rated steam flow; sudden load reductions of up to the capacity of the steam bypass can be accommodated without reactor scram.

Normally, the bypass valves are held closed and the pressure regulator controls the turbine control valves, directing all steam flow to the turbine. If the speed governor or the load limiter restricts steam flow to the turbine, the regulator controls system pressure by opening the bypass valves. If the capacity of the bypass valves is exceeded while the turbine cannot accept an increase in steam flow, the system pressure will rise and reactor protection system action will cause shutdown of the reactor.

The bypass valves are an automatically-operated, regulating type which are proportionally controlled by the turbine pressure regulator and control system.

The turbine control system provides a signal to the bypass valves corresponding to the "error" between the turbine control valve opening required by the controlling pressure regulator and the turbine control valve position demanded by the output of the low value gate circuit. (see Figure 7.7-10.) An adjustable bias signal is provided to maintain the bypass valves closed for momentary differences during normal operational transients.

Bypass valves and controls are designed so that bypass steam flow is shut off upon loss of control system electric power or hydraulic pressure.

7.7.1.5.3.4 Turbine Speed-Load Control Systems

7.7.1.5.3.4.1 Turbine Speed/Load Control

Turbine speed and load control is accomplished by an electric hydraulic control system provided by the turbine manufacturer. Features incorporate automatic control of turbine speed and acceleration from zero to full speed and automatic load and loading rate from zero to full load. A standby manual speed/load system is provided should it become necessary to remove the automatic control system from service. Monitoring of significant turbine and control system parameters along with alarming any undesirable conditions is provided to the operator in the main control room.

A trip and monitoring system is provided which will initiate appropriate action on abnormal operating conditions and indicate the existence of these conditions to the operator. Any trip action of this system will result in removing the hydraulic fluid pressure from the emergency trip system resulting in rapid closure of all turbine valves. Circuitry is also provided to test most components of the trip system during operation.

7.7.1.5.3.4.2 Behavior of Turbine Outside of Normal Operation

(1) Turbine Startup.

Prior to turbine startup, sufficient reactor steam-flow is generated to permit the steam bypass valves to maintain reactor pressure control while the turbine is brought up to speed and synchronized under its speed-load control.

(2) Partial Load Rejection.

During partial-load rejection transients, which are apparent to the reactor as a reduction in turbine load demand resulting from an increase in generator (or grid) frequency above rated, the turbine-pressure control scheme allows the reduced turbine speed-load demand to override the pressure regulation demand and thereby directly regulate the turbine control valves.

7.7.1.5.3.4.3 Turbine Generator to Reactor Protection System Interface

Two conditions which initiate reactor scram are turbine stop valve closure and turbine control valve fast closure when reactor power is above a preselected percent of rated power. (see Section 7.2.1.1.4.4.2.)

The turbine stop valve closure signal is generated before the turbine stop valves have closed more than 10 percent. This signal originates from position switches that sense stop-valve motion away from fully open. Four limit switches are provided distributed equally among the turbine stop valves. The switches are closed when the stop valves are fully open, and open within 10 milliseconds after the set point is reached. The switches are electrically isolated from each other and from other turbine plant equipment.

The control valve fast closure signal is generated by four turbine hydraulic oil line pressure switches which sense hydraulic oil pressure decay which is indicative of fast control valve closure. The switches are closed when the valves are open, and open within 20 milliseconds after the control valves start to close in a fast closure mode.

Four turbine first stage pressure sensors, which measure equivalent steam flow, are provided for bypassing the stop valve closure and control valve fast closure inputs at lower power levels.

7.7.1.5.3.4.4 Turbine-Generator to Main Steam Isolation System Interface

7.7.1.5.3.4.4.1 Main Condenser Vacuum Sensors

There are four independent main condenser vacuum sensors for the purpose of providing an isolation signal to the NSSS main steam isolation valves. Each vacuum sensor has its own isolation (root) valve and pressurizing source connection for testing. Pressure sensor signal goes low on low vacuum. The vacuum sensor setting is selected so that it is compatible with

safe turbine and main condenser operating and design conditions should loss of vacuum occur. Condenser vacuum sensors are also discussed in Section 7.3.1.1.2.4.1.14.

7.7.1.5.3.5 Testability

Testing controls are provided for testing the turbine valve reactor protection system interface signal switches in the following ways:

(1) Actuate each stop valve individually to the 10% closed point with no interaction with other valves.

(2) Actuate one control valve fast closure hydraulic oil pressure switch at a time by actuating test valves in the pressure switch sensing line.

(3) Individually test each main condenser low vacuum sensor.

7.7.1.5.4 Environmental Considerations

The turbine-generator control system is required to operate in the normal plant environment for power generation purposes only.

Instruments and controls on the turbine that experience the turbine building normal design environment are listed in Engineering Standard MS-02.00 (Reference 2). The logic, remote control units, and instrument terminals located in the main control room experience the environment listed in Table 3.11-5.

7.7.1.5.5 Operational Considerations

7.7.1.5.5.1 General Information

Process variables which are controlled by the pressure regulator, speed/load control system are displayed on the turbine-generator section of the main control board. Manual and automatic control modes for the various turbine-generator operational modes (such as startup, normal operation, and shutdown), are available to the operator from the main control board. Auto display lights are provided to inform the operator as to the operating mode of the turbine-generator unit.

At least two pressure control channels, operating redundantly, receive inputs from independent pressure transducers in the main steam line upstream of the main steam stop valves and from the pressure reference unit. Main steam pressure indications and pressure setpoint adjustments/indications are located on the turbine control panel. Pressure set point adjustment is limited to about one psi per sec. by motor speed. In the event of failure of either regulator, alarm communication is provided in the main control room.

7.7.1.5.5.2 Reactor Operator Information

The NSSS pressure regulator has the following controls and information displayed in the main control room:

(1) Main steam pressure transducer output regulator A.

(2) Main steam pressure transducer output regulator B.

(3) Main steam pressure regulator set point A.

(4) Main steam pressure regulator set point B.

(5) Individual bypass valve position indicator.

(6) Individual bypass valve demand control signal.

(7) Bypass valve test controls.

(8) Pressure regulator selection control.

7.7.1.5.5.3 Set Points

Safety set points associated with this system are discussed in Sections 7.2.2.1 and 7.3.1.1.2.13.3.

7.7.1.6 Neutron Monitoring System - Traversing In-core Probe (TIP) Subsystem - Instrumentation and Controls

7.7.1.6.1 System Identification

7.7.1.6.1.1 General

Flux readings along the axial length of the core are obtained by fully inserting the traversing ion chamber into one of the calibration guide tubes, then taking data as the chamber is withdrawn. The analog data is available for driving a recorder or for use by the Performance Monitoring System. One traversing chamber and its associated drive mechanism is provided for each group of nine fixed in-core assemblies.

The control of the subject system is discussed in this section.

7.7.1.6.1.2 Classification

This system is a power generation system, and is classified as not related to safety.

7.7.1.6.1.3 Reference Design

Table 7.1-2 lists reference design information. The subject instrumentation and control system is an operational system and has no safety function. Therefore, there are no safety design differences between this system and those of the reference design facilities. This system is functionally identical to the referenced system.

7.7.1.6.2 Power Sources

The power for the subject system is supplied from an ac power source.

7.7.1.6.3 Equipment Design

7.7.1.6.3.1 General

The number of TIP machines is indicated in drawing E02-1NR99. TIP machines have the following components:

(1) One Traversing in-core probe (TIP),

(2) One drive mechanism,

(3) One indexing mechanism, and

(4) Up to 10 in-core guide tubes.

The subsystem allows calibration of LPRM signals by correlating TIP signals to LPRM signals as the TIP is positioned in various radial and axial locations in the core. The guide tubes inside the reactor are divided into groups. Each group has its own associated TIP machine.

7.7.1.6.3.2 Equipment Arrangement

A TIP drive mechanism uses a fission chamber attached to a flexible drive cable (Drawing 204B7284 TIP ASM). The cable is driven from outside the drywell by a gearbox assembly. The flexible cable is contained by guide tubes that penetrate the reactor core. The guide tubes are a part of the LPRM detector assembly. The indexing mechanism allows the use of a single detector in any one of ten different tube paths. The 10th tube is used for TIP cross calibration with the other TIP machines. The control system provides for both manual and semi-automatic operation. Electronics of the TIP panel amplify and display the TIP signal. Core position versus neutron flux is recorded on an X-Y recorder in the main control room and is provided to the computer. Actual operating experience has shown the system to reproduce within 1.0% of full scale in a sequence of tests (Reference 1).

7.7.1.6.3.3 Testability

The TIP equipment is tested and calibrated using Process Computer data and procedures described in the operation manuals.

7.7.1.6.4 Environmental Considerations

The equipment and tubing located in the drywell are designed for continuous duty up to 150°F and 90% relative humidity.

7.7.1.6.5 Operational Considerations

The TIP can be operated during reactor operation to calibrate the LPRM channel. The subject system has no safety set points.

7.7.1.7 Performance Monitoring System (PMS)

7.7.1.7.1 System Identification

7.7.1.7.1.1 General

The objective of the PMS are to provide a fast and accurate determination of core thermal performance; to improve data reduction, accounting, logging function, and to pass pertinent data to the display control system described in subsection 7.7.1.21.

7.7.1.7.1.2 Classification

This system is a power generation system and is classified as a system not related to safety.

7.7.1.7.1.3 Reference Design

Table 7.1-2 lists reference design information.

7.7.1.7.2 Power Sources

The power for the performance monitoring system is supplied from a reliable ac source which includes a UPS with a four hour battery back-up.

7.7.1.7.3 Equipment Design

7.7.1.7.3.1 Circuit Description

The PMS performs the monitoring functions and calculations defined as being required for the effective operation of a nuclear power plant. The functions performed include monitoring of process inputs, performing calculations on these inputs, and displaying the inputs and calculated results on one or more of the following: video monitor, typewriter, line printer, and PMS trend recorder. The calculations performed by PMS include process validation and conversion, combination of points, nuclear steam supply performance calculations, and balance of plant performance calculations. Operator communication is provided to accomplish the above functions.

The PMS hardware is composed of the following major components:

(1) The central processors perform various calculations, make necessary interpretations, and provide for general input/output device control and buffered transmission between I/O devices and memory.

(2) An automatic priority interrupt (API) module provides processor capability to respond rapidly to important process functions and to operate at optimum speed.

(3) A random access type processor memory. A memory parity check feature is capable of stopping computer operation subsequent to completing an instruction in which a parity error is detected. The processor memory has suitable shutdown protection to prevent information destruction in the event of loss of power or incorrect operating voltage.

(4) Capability is provided to maintain real time by utilizing necessary calendar type programs to compute year, month, day, hour, minute, second, and either cycles or milliseconds. This is done automatically except in the event of a processor shutdown. In this case the operator is required to update the computer with the correct time when restarting the system.

(5) Bulk memory is used for storing all programs and all data. Capability is provided to protect selectable portions of bulk memory against information destruction caused by an inadvertent attempt to write over the programs or by a system power failure.

(6) The peripheral I/O equipment is used to read data into and out of the computer.

(7) The process I/O hardware consists of analog and digital inputs. Intermittent signals and pulse type inputs are sensed by automatic priority interrupt.

(8) During routine operation means are provided to allow the operator to enter information into the computer system and request various special functions. Diagnostic alarms, displays, and associated function selection switches permit the operator to communicate with the processor.

(9) The peripheral equipment in the computer equipment area is used by programmers and maintenance personnel to permit necessary control of the system for trouble-shooting and maintenance functions.

(10) The 3D Monicore portion of PMS receives plant data from the NSS computer and calculates the nuclear performance core power distribution and thermal limit parameters.

(11) The peripheral computer is used as an alternate data acquisition interface to the PMS.

7.7.1.7.3.2 Testability

The PMS has self-checking provisions. It performs diagnostic checks to determine the operability of certain portions of the system hardware and performs internal programming checks to verify that input signals and selected program computations are either within specific limits or within reasonable bounds.

7.7.1.7.4 Environmental Considerations

(1) For all computer equipment except peripherals

a.	Operating Temperature - Room Ambient	0 to 50° C (CPU) 0 to 60°C (all others)
b.	Relative Humidity	5 to 95 percent (noncondensing)
c.	Pressure	Atmospheric to 7500 ft. Altitude

(2) Exceptions. Exceptions to the preceding environmental specifications are with respect to the magnetic disc, magnetic tape unit (retired in place), I/O typer and

line printer, and video controller. The environmental conditions for these units are listed below:

a.	Operating Temperature - Room Ambient	0 to 50° C
b.	Operating Relative Humidity	20 to 65 percent
c.	Pressure	Atmospheric up to 7500 ft. Altitude

7.7.1.7.5 Operational Considerations

7.7.1.7.5.1 Nuclear Performance Calculation Programs

The Nuclear performance programs provide the reactor core performance information. The functions performed are as follows:

(1) The local power density of every 6-inch segment for every fuel assembly is calculated, using plant inputs of pressure, temperature, flow, LPRM levels, control rod positions, and the calculated fuel exposure.

(2) Total core thermal power is calculated from a reactor heat balance. Iterative computational methods are used to establish a compatible relationship between the core coolant flow and core power distribution. The results are subsequently interpreted as power in specified axial segments for each fuel bundle in the core.

(3) The core power distribution calculation sequence is completed periodically and on demand. Subsequent to executing the program the computer prints a periodic log for record purposes. Key operating parameters are evaluated based on the power distribution and edited on the log.

(4) Flux level and position data from the traversing in-core probe (TIP) equipment are read into the computer. The computer evaluates the data and determines gain adjustment factors by which the LPRM amplifier gains can be altered to compensate for exposure-induced sensitivity loss. The LPRM amplifier gains are not to be adjusted except during the performance of a calibration. The gain adjustment factor computations help to indicate when such a calibration procedure is necessary.

(5) Using the power distribution data, a distribution of fuel exposure increments from the time of previous power distribution calculation is determined and is used to update the distribution of cumulative fuel exposure. Each fuel bundle is identified by batch and location, and its exposure is stored for each of the axial segments used in the power distribution calculation. These data are printed out on operator demand. Boron depletions are determined periodically for each quarter-length section of each control rod. The corresponding cumulative Boron depletions are periodically updated and printed out on operator demand.

(6) The exposure increment of each local power range monitor is determined periodically and is used to update both the cumulative ion chamber exposures and the correction factors for exposure-dependent LPRM sensitivity loss. These data are printed out on operator demand.

(7) The computer provides on-line capability to determine on-demand isotopic composition for each 6 inch length section of each fuel bundle in the core. This evaluation consists of computing the weight of one neptunium, three uranium, and five plutonium isotopes as well as the total uranium and total plutonium content. The isotopic composition is calculated for each 6 inch length of each fuel bundle and summed accordingly by bundles and batches.

7.7.1.7.5.2 Reactor Operation Information (Monitor, Alarm, and Logging Programs)

(1) General - The PMS is capable of checking each analog input variable against two types of limits for alarming purposes:

a. Process alarm limits as determined by the computer during computation or as preprogrammed at some fixed value by the operator, and

b. A reasonableness limit of the analog input signal level programmed.

The alarming sequence consists of an optional audible alarm, and a displayed descriptive message for the variables that exceed process alarm limits. The PMS provides the capability to alarm the main control room annunciator system in the event of abnormal PMS operation. Abnormal conditions for alarm include, but are not limited to, loss of power, over temperature, memory error, stall alarm, and selected program-driven PMS output contacts.

(2) Trip/Scram Data Recall Logging - The PMS measures and stores the values of a set of analog variables at predefined intervals to provide a history of data. An on-demand request permits the operator to initiate printing of this data and to terminate the log printout when desired. The processor automatically prints the values of these variables for the 5-minute period immediately preceding and the 5-minute period following a reactor scram.

The operator can terminate the typing of this data.

(3) Trend Logging - An analog trend capability is provided for logging the values of the operator-selected analog inputs and calculated variables. The periodicity of the log is limited to a nominal selection of intervals, which can be adjusted as desired by program control.

(4) Status Alarm - The status alarm function scans digital inputs once each second and provides a printed record of system alarms. The record includes point description and time of occurrence.

(5) Alarm Logging - The alarm logs required by the associated process programs are printed. Alarm printouts inform the operator of computer system malfunctions, system operation exceeding acceptable limits, and potentially unreasonable, off-normal, or failed input sensors.

(6) Periodic Logs - There are two Periodic Logs.

The Daily Log captures data for printing on the hour throughout a day. During plant operation this log would normally contain values for temperatures, power

outputs, and flows associated with the main generator and turbines, and with the feedwater, recirculation, and reactor water cleanup systems. The computer points and headings used in this log can be changed as desired.

The Monthly Log captures data every day at midnight for printing at the end of the calendar month, or on demand. During plant operation this log can be used to capture daily and monthly averages or accumulations for plant gross and net power outputs, load distribitions, and turbine parameters. The computer points and headings used in this log can be changed as desired.

7.7.1.7.5.3 Performance Calculation Programs

These programs perform calculations of plant performance data not directly related to the nuclear system. The data stored by the program is available for display or logs. Performance calculations include flow calculations, electrical calculations, thermodynamic calculations, nuclear boiler system performance calculations, feedwater heaters and moisture separators performance calculations, and unit performance calculations.

7.7.1.8 Reactor Water Cleanup (RWCU) System – Instrumentation and Controls

7.7.1.8.1 System Identification

7.7.1.8.1.1 General

The purpose of the RWCU system instrumentation and control is to provide for plant equipment protection and operator information concerning the effectiveness of operation of the system.

7.7.1.8.1.2 Classification

This is a power generation system and is classified as not related to safety.

7.7.1.8.1.3 Reference Design

Table 7.1-2 lists reference design information. The subject control system is an operational system and has no safety function. Therefore, there are no safety design differences between this system and those of the reference design facilities. This system is functionally identical to the referenced system.

7.7.1.8.2 Power Sources

The RWCU system instrumentation and controls are fed from the plant instrumentation bus. No backup power source is necessary since the RWCU system is not a safety related system. Adequate fuse protection is provided so that a short circuit within the system will have only a local effect which can be easily corrected without interrupting the reactor operation.

7.7.1.8.3 Equipment Design

7.7.1.8.3.1 General

The reactor water cleanup system is described in Section 5.4.8.

7.7.1.8.3.2 Circuit Description

The RWCU system is protected against overpressurization by relief valves. The ion exchange resin is protected from high temperature by temperature switches upstream of the filter demineralizer unit. One switch activates an alarm while a second switch closes the isolation valve which subsequently trips the cleanup pumps. The isolation valves will also close automatically on a reactor low water level signal and when the standby liquid control system is actuated and on a "leak signal" from the leak detection system. (See Section 7.3.1.) The pumps will automatically trip when a low flow condition is sensed by the RWCU control system.

A high differential pressure across the filter-demineralizer or its discharge strainer will automatically isolate the units and sound an alarm. The holding pump starts whenever there is low flow through a filter-demineralizer. The precoat pump will not start when the level in the precoat tank is low. A time delay is included in the low flow pump trip to prevent spurious trip.

A sampling station is provided to obtain reactor water samples from the entrance and exit of both filter-demineralizers.

The system control and instrumentation for flow, pressure, temperature, and conductivity are recorded or indicated on a panel in the control room. Instrumentation and control for backwashing and precoating the filter-demineralizers are on a local panel outside the drywell. Alarms are sounded in the control panel room to alert the operator to abnormal conditions.

7.7.1.8.3.3 Testability

Because the RWCU system is usually inservice during plant operation, satisfactory performance is demonstrated without the need for any special inspection or testing beyond that specified in the manufacturer's instructions.

7.7.1.8.4 Environmental Considerations

The RWCU system is not required for safety purposes, nor required to operate after the design basis accident. The reactor water cleanup system is required to operate in the normal plant environment for power generation purposes only.

RWCU instrumentation and controls located in the RWCU equipment area are subject to the environment described in Table 3.11-5.

7.7.1.8.5 Operational Considerations

7.7.1.8.5.1 General Information

The RWCU system-instrumentation and control is not required for safe operation of the plant. It provides a means of monitoring parameters of the system and protecting the system.

7.7.1.8.5.2 Reactor Operator Information

Refer to the RWCU System P&ID Drawing M05-1076 and Drawing E02-1RT99.

7.7.1.8.5.3 Set Points

This system has no safety setpoints.

7.7.1.9 Area Radiation Monitoring System (ARM) - Instrumentation and Controls

7.7.1.9.1 System Identification

7.7.1.9.1.1 General

The objective of the area radiation monitoring system (ARM) is to indicate, alarm and record gamma radiation levels in areas where radioactive material may be present, stored, handled, or inadvertently introduced. The ARM is described in Subsection 12.3.4.

7.7.1.9.1.2 Classification

This system is classified as not related to safety.

7.7.1.9.1.3 Reference Design

There is no reference design for this system.

7.7.1.9.2 Power Sources

The power source for the ARM system are the 120-Vac instrument buses (non-essential). Each ARM is provided with battery backup power (8 hour capacity) for limited operation.

7.7.1.9.3 Equipment Design

7.7.1.9.3.1 General

Each digital ARM consists of a GM tube detector and a local digital processor. Each ARM is capable of stand-alone operation without interface with the other portions of the radiation monitoring system.

7.7.1.9.3.2 Circuit Description

The digital processor provides the following features or capabilities:

(1) Converts the detector signal to a digital signal.

(2) Converts the digital signal to engineering units (mR/hr).

(3) Local warning lights and audible alarm for high radiation and instrument failure trips (except when operating from the battery).

(4) Local and remote trip reset.

(5) Local digital display, reading out in mR/hr.

(6) Capable of transmitting radiation data, alarm information, and monitor status to the central terminal.

(7) Ability to initiate source checks in order to facilitate maintenance and surveillance checks.

(8) Able to retain data for a limited amount of time upon loss of power.

(9) Able to condense, average, and store data available to it.

(10) One set of status (warning) lights: Normal, Maintenance, Fail, High, Alert and Trend. The operation of the Trend Alarm is based on increasing radiation intensity (count rate) over a 10-minute period compared to the prior 10-minute period. To avoid the problems of insensitivity at low count rates or false alarms caused by statistical fluctuation at high count rates, the alarm is based on a percentage increase over the prior count rate. Thus, at each 10-minute interval, the average count rate is computed, the prior 10 minutes average count rate is subtracted and the result is divided by the prior. This result is refined to get units of percent per minute which is compared to the number entered for alarm trend setting. If it exceeds the setting, the alarm will be actuated.

7.7.1.9.3.3 Testability

Each ARM may be tested by initiating a functional source check. The sequence of the source check is as follows:

(1) Initiate source check functions.

(2) System acquires the current reading.

(3) The check source is actuated.

(4) The system prints the check source status.

(5) System acquires the check source data.

(6) The system prints the time and date, the current reading, check source reading, net reading, the result of test, alarm setting, and operational status on return.

A pulse generator may be connected to the processor to verify the correlation between detector counts per minute and display mR/hr.

7.7.1.9.4 Environmental Considerations

Each ARM is designed to meet the following environmental considerations:

(1) Less than a 10% change in calibration or response per decade reading shall occur for temperatures between 65°F and 120°F.

(2) Less than a 10% change in calibration or response per decade reading shall occur for relative humidity between 5% and 100%.

(3) No change in calibration or response for pressure between -1.0 inch of water and 2 psig.

7.7.1.9.5 Operational Considerations

7.7.1.9.5.1 General Information

Each digital ARM can communicate with the central control terminal in the main control room. In addition, portable control terminals may be connected to the individual ARM. All operator actions require the use of a control terminal.

7.7.1.9.5.2 Reactor Operator Information

Reactor operator information is provided by the central control terminal located in the main control room.

7.7.1.9.5.2.1 General Description of Central Control Terminal

7.7.1.9.5.2.1.1 Terminal Definitions

(1) Central Control Terminal - a general term used to refer to the entire AR/PR MCR LAN.

(2) Control Terminal - any terminal on the system with the ability to display annunciations and trend information, respond to alarms, send control signals to field units, and update field unit parameters. There are three of these stations, 1H13-P864, 1H13-P870 and in the Technical Support Center.

(3) Master Control Terminal - the only control terminal that receives audible alarm indication, usually 1H13-P870.

(4) Monitoring Terminal - a terminal that monitors current data from field units. It does not have ability to query the AR/PR MCR LAN, send information to field units or display historical data maintained by the central control terminal. There is one monitoring terminal, located in the Radiation Protection Office.

7.7.1.9.5.2.1.2 AR/PR MCR LAN

The Area Radiation/Process Radiation (AR/PR) centralized monitoring system is a local area network (LAN) for the main control room. The LAN contains three primary work areas and a remote monitoring terminal.

(1) The Central Server is located in 1H13-P864 in the MCR. It has the following functions:

- provides a means of communicating with various radiation monitoring field units
- maintains a database relative to each field unit
- provides the Secondary Domain Server for the LAN operating system
- provides the primary server for the AR/PR centralized monitoring system
- provides for communication of AR/PR information to the NRC and IDNS
- provides a backup Control Terminal for the MCR.

(2) The 1H13-P870 Panel houses a control terminal which:

- is the primary control terminal for the AR/PR MCR LAN
- s normally the Master Control Terminal.

(3) The Technical Support Center contains the LAN hub which routes signals between the three control terminals, is the location of the LAN printer, and provides a desktop PC with the following functions:

- provides the Primary Domain Server for the LAN operating system
- provides a control terminal for use during Emergency Response operations and maintenance activities
- provides a blind server to provide AR/PR information to remote terminals. The blind server protects the AR/PR MCR LAN from unauthorized access.

(4) The Radiation Protection Office houses a monitoring terminal where RP personnel can monitor current plant radiological conditions.

7.7.1.9.5.3 Setpoints

The basis for setpoints is described in subsection 12.3.4.

7.7.1.10 Gaseous Radwaste System - Instrumentation and Controls

7.7.1.10.1 System Identification

7.7.1.10.1.1 General

The objective of the gaseous radwaste system is to process and control the release of gaseous radioactive wastes to the site environs so that the total radiation exposure to persons outside the controlled area is as low as practicable and does not exceed applicable regulations.

7.7.1.10.1.2 Classification

This system is required for power generation only and is classified as not related to safety.

7.7.1.10.1.3 Reference Design

Table 7.1-2 lists reference design information.

7.7.1.10.2 Power Sources

The Gaseous radwaste system instrumentation is powered by non-class 1E ac distribution panels.

7.7.1.10.3 Equipment Design

7.7.1.10.3.1 General

This system is monitored by flow, temperature, pressure, dew point and hydrogen analyzer instrumentation to ensure correct operation and control. Table 11.3-4 lists the process parameters that are instrumented to alarm in the main control room. It also indicates whether

the parameters are recorded or just indicated. The mechanical process system is described in Subsection 11.3.2. The reactor operator is in control of the system at all times.

A radiation monitor after the cooler condenser continuously monitors radioactivity release from the reactor and input to the charcoal adsorbers. This radiation monitor is used to provide an alarm on high radiation in the off-gas.

Radiation monitors are also provided at the outlet of the charcoal adsorbers to continuously monitor the rate from the adsorber beds. These radiation monitors are used to isolate the off-gas system on high radioactivity to prevent treated gas of unacceptably high activity from entering the vent.

The activity of the gas entering and leaving the off-gas treatment system is continuously monitored. Thus, system performance is known to the operator at all times. Provision is made for sampling and periodic analysis of the influent and effluent gases for purposes of determining their compositions. This information is used in calibrating the monitors and in relating the release to calculated environs dose. Process radiation instrumentation is described in Subsection 11.5.2.2.

7.7.1.10.3.2 SJAE Flow Control and Interlocks

An instrumentation loop is provided to control the steam pressure to the SJAE. In the event of low steam (dilution) flow, which also provides the motive force for the system, the SJAE train suction valve is closed in order to prevent non-diluted levels of detonable mixtures down stream of the SJAE.

The steam (dilution) flow is recorded as well as annunciated for high and low flow.

7.7.1.10.3.3 Catalytic Recombiner Instrumentation

The internal arrangement of the catalytic recombiners is outlined in Table 11.3-2. The catalytic recombiner vessel temperatures are monitored by thermocouples and recorded. High or low temperatures are annunciated in the main control room. The standby recombiner temperature is controlled, monitored, and recorded. Inlet process gas is monitored for temperature and annunciated in the main control room if temperatures are low. The preheater inlet gas pressure is monitored and alarmed in the main control room if pressure becomes too high.

None of the process variable alarms on the standby recombiner train are activated, save the recombiner condenser high/low level alarms, since only these can indicate a significant standby malfunction. Other alarms, if not inactivated during standby, would sound continuously and make the operator insensitive to alarms from the operating recombiner train. However, process variables are monitored, recorded and indicated on the standby train as on the operating train, and operator control of the standby train is not prevented.

The offgas condenser's condensate level is maintained at a given level within the condenser shell. The level control system will provide drainage of condensate from the condenser shell if the liquid level becomes higher than the level control set point. High and low level are annunciated in the main control room.

The process gas discharge from the condenser is monitored for high temperature. This is a secondary indication for the operating efficiency of the unit.

7.7.1.10.3.4 Cooler Condenser Discharge Temp

The process gas discharged from the cooler condenser is alarmed for high and low extremes and recorded. This equipment further dewaters the process gas prior to entering the desiccant driers.

7.7.1.10.3.5 Hydrogen Analyzer Measurement System

Two parallel independent hydrogen analyzers are used to measure the hydrogen content of the offgas process steam downstream of moisture removal system and upstream of the charcoal beds and charcoal bed bypass line. The hydrogen concentration percentage output from the analyzers is indicated and recorded in the main control room along with independent annunciation for a high hydrogen concentration percentage. No local annunciation is provided. Alarm setpoint is adjustable over full scale range of the instrument. The analyzer range is 0 to 5 volume percent hydrogen, with an accuracy of ±0.25 volume percent. Exact setpoint is set at plant control room.

Each hydrogen analyzer continuously withdraws a sample of the process offgas, conditions the gas to a constant temperature, pressure, and humidity, analyzes the hydrogen content, and returns the sample gas to the main condenser. During normal plant operation, the main condenser vacuum provides the pumping force to withdraw the sample gas from the offgas process line and through the hydrogen analyzer system. A high temperature thermal detector, positioned above the sintered metal sample gas inlet within the chamber, will activate the sample gas line isolation solenoid valve on high temperature if the hydrogen is ignited. The sample line isolation valve will also close on low sample chamber temperature due to either loss of heat tracing performance or failure of the thermal detector. In addition, the analyzer element specified is an electrolytic cell type unit, and does not serve as an inherent ignition source to a detonable hydrogen-oxygen mixture. An auxiliary vacuum pump is provided to provide vacuum pumping to withdraw sample gases in the absence of sufficient main condenser vacuum. Sample gas flow, pressure, and temperature are monitored within each hydrogen analyzer system and an annunciation in the main control room is provided to notify the operator of a malfunction within the hydrogen analyzer system. Hydrogen percentage calibration checks are made by closing off the line to the offgas process line and admitting a hydrogen calibration gas and a hydrogen-free gas; this is accomplished automatically in periodic intervals by a programmer or manually by remote switches in the main control room. A loss of ac power to an analyzer system will isolate all sample gas inlets. Vacuum pumping condition (vacuum or flow) must be established before any sample gas inlet valve can be opened. These interlocks are provided within each hydrogen analyzer system.

7.7.1.10.3.6 Moisture or Dew Point Measurement

A dew point detector instrument loop is placed downstream of each desiccant vessel to measure the efficiency of the gas dryer system in removing moisture.

Each dew point channel is recorded in the main control room along with a high dew point alarm to notify the operator of the possibility that corrective action may have to be taken.

7.7.1.10.3.7 Charcoal Vessel and Vault Temperature and Flow Monitoring and Control

The charcoal vessel train temperature profile is monitored and recorded in the main control room. High vessel temperature is alarmed and annunciated in the main control room. The

charcoal vessel vault is also temperature monitored and recorded in the main control room along with high and low temperature alarm and annunciation. Two independent refrigeration units with independent temperature controls maintain the vault at a constant temperature. The refrigeration unit is part of BOP scope.

7.7.1.10.3.8 Differential Pressure Measurements

Differential pressure measurements are made across each recombiner train, the gas dryer train, the gas cooler, the charcoal vessel train, and the filter. These are all indicated in the main control room along with high differential pressure alarms and annunciation except for the gas dryer train which is just indicated.

7.7.1.10.3.9 Offgas System Flow Measurements

The flow measurements are made downstream of the bypass line, downstream of the filter. Two flow range measurements are provided. The normal plant operating flow scale range is from 3 to 30 scfm and the high flow or startup scale range is from 3 to 300 scfm. Overlap is provided to obtain a continuous measurement over the two ranges. The high flow range measures the plant startup flow while the main condenser vacuum is being established. The startup flow is indicated and recorded in the main control room along with annunciation for high and high-high flow. The normal flow is indicated and recorded in the main control room along with annunciation for low flow. The low flow alarm is provided to tell the operator that air should be added to the offgas system to reduce possible hydrogen concentration into the recombiner trains. The normal dilution for range high flow annunciation is provided to inform the operator of the possibility of catalytic recombiner failure by an increase in flow or of a large turbine seal leaking excess air into the main condenser.

7.7.1.10.3.10 Testability

Since this is a process-on-line monitoring control system with redundant instrumentation, the cross-correlation of the data provides sufficient confirmation of the systems correct operation.

7.7.1.10.4 Environmental Considerations

7.7.1.10.4.1 General

The gaseous radwaste control system is not required for safety purposes, nor required to operate after the design basis accident. The control system is required to operate in the normal plant environment for power generation purposes only.

Radwaste control and instrumentation located in the offgas equipment area are subject to environment and design conditions listed in Table 3.11-5.

7.7.1.10.4.2 Local Instrument Panels

The local instrument panels are located in the operating area outside of the shield wall from the process. The environmental conditions are the same as described above. See Table 3.11-5. Specially designed instrumentation panels house all of the instruments with sensing lines connected to the offgas system process stream. The panels are furnished with exhaust blowers which discharge out through a duct which is routed into a radiation control portion of the building. This keeps the inside of the panels at a negative pressure with respect to the

immediate area. This will exhaust any offgas leak, if it should develop, into a control area or duct. All instruments and connecting lines are purchased, installed and tested to the maximum leak rate requirement of 1 x 10^{-6} cc/sec at 5 psid. Air or water purging and draining means are provided to flush out process gas or liquid back to the process system to permit instrument or device removal for maintenance purposes.

7.7.1.10.4.3 Hydrogen Analyzer Enclosures

The hydrogen analyzer is housed in a special enclosure. The enclosure has a discharge duct which is connected to an exhaust blower. This keeps the inside of the enclosure at a negative pressure with respect to the immediate area. It is provided with air purge and drainage back to the main condenser. The radiation level at the hydrogen analyzers could be on the order of rads per hour since it is continuously pumping a sample of the off-gas process stream through it for hydrogen analysis. The other environmental conditions are the same as above.

7.7.1.10.4.4 Special Considerations

The instrument sensing lines are designed with a detonation resistant pressure rating to the first root valve.

7.7.1.10.5 Operational Considerations

7.7.1.10.5.1 General Information

No operator action is required on the equipment described unless an alarmed condition occurs.

7.7.1.10.5.2 Reactor Operator Information

Operator indicators and alarms are shown in Drawing M05-1084.

7.7.1.10.6 Alarmed Parameters

Those process parameters which are alarmed are listed in Table 11.3-4.

7.7.1.11 Liquid Radwaste System Instrumentation and Controls

7.7.1.11.1 System Identification

The objective of the liquid radwaste system is to control the release of liquid radioactive waste material to the environs. The liquid radwaste control system consists of the electrical circuitry, switches, indicators, sensors, and alarm devices provided for operations manipulation of the valves, motors, and other equipment associated with the liquid radwaste system.

The system is required for power generation only. There are no Safety Class 1 components in this system.

7.7.1.11.2 Power Sources

The 120-Vac instrument power is provided by two MCC feeds through a transfer switch and voltage regulator. The 120-Vac control power is provided from the MCCs for miscellaneous equipment and solenoid valves.

7.7.1.11.3 Equipment Design

The liquid radwaste system is designed to process liquid waste water to remove particulates, impurities, and other materials and return the processed water for plant usage.

Only those portions of the liquid radwaste system providing information which requires operator attention are described to show operator ability to take corrective action when needed.

Waste water is collected in various sumps and drain tanks throughout the plant and is automatically pumped under level switch control into the radwaste collection tanks where it will be semi-automatically processed and returned to storage tanks. Excess processed liquids that are required to be discharged from the plant are radiation monitored and flow controlled, with flow rate and radiation level recorded. The instrumentation and control system of the radwaste process is typical of a standard chemical and water treatment process. Tank levels and other process parameters are indicated and out of limit conditions are annunciated in the Main Control Room and/or radwaste operations center (ROC).

Drywell and Containment Building Sump Pump Controls

The drywell and containment building sumps are pumped to drain tanks in the fuel and auxiliary building. Each sump is equipped with two pumps that automatically start and stop on high and low sump level respectively. Manual pump controls are provided in the main control room. A high-high level is provided by a level detecting device which annunciates in the main control room. The lines from the pumps are provided with isolation valves which close on containment isolation signal as described in Subsection 6.2.4. The fuel and auxiliary building collection tanks are pumped to the radwaste system automatically on tank level controls.

Auxiliary Building, Fuel Building, Radwaste Building, and Turbine Building Sumps

These sumps collect waste water from their respective areas and automatically pump out the sumps to drain tanks by level controls. These are not safety systems, and an alarm and annunciation in the main control room or ROC will occur on a high-high sump level to alert the operator to take corrective action.

Tank Level and Process Control

All tanks containing waste liquids throughout the radwaste liquid processing system are provided with liquid level sensors which input to indicators and control logic in the radwaste control room as well as alarm in the radwaste control room for high liquid level to inform the operator that corrective action is to be taken. The process control is primarily initiated by an operator from the radwaste control room panel. The control system is designed for manual start-up and automatic stop when a process is completed (i.e., tank liquid contents have been emptied to the next in sequence process).

Testability

Level, flow, and other process parameters are located and installed so that calibration and test signals can be applied during system operation if desired.

7.7.1.11.4 Environmental Considerations

The liquid radwaste control systems are not required for safety purposes, nor required to operate after the design-basis accident. The liquid radwaste control system is required to operate in the normal plant environment for power generation purposes only.

7.7.1.11.5 Operational Considerations

The operator has full control of the process system batches.

Indicators are provided in the ROC for all collection tanks to inform the operator of the status of the system. Process parameters of flow, differential pressure, conductivity, and level are indicated in the ROC to enable the operator to monitor process operation. Discharge radioactivity level is recorded in the ROC.

Alarms are provided to inform the operator that a tank must be emptied or processed, or that a particular piece of equipment has malfunctioned and that corrective action is to be taken.

All tank levels are set to alarm in sufficient time for the operator to take corrective action in the process control.

7.7.1.12 Solid Radwaste Control System Instrumentation and Control

7.7.1.12.1 System Identification

The objective of the solid radwaste system is to control the release of solid radioactive waste material to the environs and to package in suitable containers for offsite shipment and burial those wastes that cannot be released.

The solid radwaste control system consists of electrical circuitry, switches, indicators, sensors, and alarm devices provided for operation and manipulation of the valves, motors, and other equipment associated with the solid radwaste system.

This system is required for power generation only. There are no Safety Class 1 components in this system.

7.7.1.12.2 Power Sources

The 120-Vac instrument power is provided by MCC feeds. The 120-Vac control power is provided from the MCCs for miscellaneous equipment and solenoid valves.

7.7.1.12.3 Equipment Design

The solid radwaste system is designed to process dry wastes from the drywaste storage area and sludge from the liquid radwaste system. The resulting solid waste is then packaged in suitable containers for shipment offsite.

Only those portions of the solid radwaste system providing information which requires operator attention are described to show operator ability to take corrective action when needed.

7.7.1.12.3.1 Sludge Collection

Sludge is collected from various tanks filter, demineralizers, and evaporators in the radwaste system and pumped to sludge tanks. The sludge level and water level in each tank is measured remotely by tank sounding instrumentation. When the radwaste operator initiates level measurement, the selected tank inventory is displayed on the sounding instrumentation control terminal in the ROC. The operator initiates decanting of excess water and pumping of concentrated sludge from the ROC, and controls the process to its completion.

The high-high water level is alarmed in the radwaste control room from all tanks.

7.7.1.12.3.2 Sludge Processing

A mobile solidification system is used to package radioactive solid waste for off site shipment. The mobile solidification station consists of concentrated waste, sludge and resin waste transfer lines with isolation valves (for details see section 11.4).

The solid radwaste system is controlled and monitored from the radwaste operations center. The valves which interface between the spent resin, sludge and concentrates tanks and the mobile solidification station are controlled at the mobile solidification control panel in the radwaste operations center.

7.7.1.12.3.3 Storage and Handling

An overhead drum handling bridge crane is used to move filled waste containers from the mobile solidification system to storage or the shipping area. The crane is equipped with a position indexing device with remote readout at the control panel. Closed circuit TV is provided to enable the operator to monitor the operation of the bridge crane.

7.7.1.12.3.4 Testability

Level, flow, and other process parameter sensor channels are designed and located so that calibration and test signals can be applied to verify operability.

7.7.1.12.4 Environmental Considerations

The solid radwaste control system is not required for safety purposes, nor required to operate after the design-basis accident. The solid radwaste control system is required to operate in the normal plant environment for power generation purposes only.

7.7.1.12.5 Operational Considerations

The operator has full remote control of the process system batch operation.

Indication of the water and sludge inventory for all solid radioactive waste process tanks is available in the ROC. Alarms are provided to inform the operator that a tank must be emptied or processed, or that a particular piece of equipment has malfunctioned and that corrective action is to be taken.

All tank levels are set to alarm in sufficient time for the operator to take corrective action in the process control.

7.7.1.13 Auxiliary Building HVAC System Instrumentation and Controls

7.7.1.13.1 System Identification

The instrumentation and controls of the auxiliary building HVAC system are designed to (1) provide ventilation air requirements to part of the auxiliary building and to the control building (except for the main control room) and limit the maximum ambient temperature therein.

The auxiliary building HVAC system is described in detail in Subsection 9.4.3.

7.7.1.13.2 Power Supply

Ventilation equipment, instruments, and controls for the auxiliary building HVAC system are fed with power from non-Class 1E power bus.

7.7.1.13.3.1 Initiating Circuits, Logic, and Sequencing

The instruments and controls functions for each auxiliary building HVAC system are described below:

(1) Start and Stop

a. Auxiliary building HVAC supply fans are started and stopped manually by independent control switches provided on the HVAC local control panels for the supply air system.

b. Auxiliary building HVAC exhaust air fans are started and stopped manually by independent control switches provided on the supply air system local control panel.

c. Auxiliary building HVAC exhaust air fans can also be started and stopped manually by their respective control switches provided on the exhaust air system local panel.

(2) Temperature Control

a. In winter the heating controller maintains fan discharge air temperature by modulating a four-stage electric heating coil.

b. In summer the cooling controller maintains fan discharge air temperature by modulating a fail open chilled water valve.

c. In mild weather the heating and cooling coils are automatically inactive and 100% unconditioned outdoor air is supplied to the building.

(3) Freeze Protection

When air temperature upstream of the cooling coils or on the floor of the duct is below its freeze protection setpoint, the control air signal is automatically cut off and the chilled water valve is rendered to full open position, and the freeze detection condition is annunciated at the local control panel. During cold weather

months, the cooling coils are manually isolated and drained to provide additional freeze protection.

(4) Building Pressure Control

The building pressure of auxiliary building, control building (elevation 719 feet and 825 feet) and diesel-generator building (elevation 762 feet) is maintained by modulating the corresponding exhaust air dampers.

7.7.1.13.3.2 Bypasses and Interlocks

(1) Interlocks

a. The corresponding discharge isolation damper of each fan automatically opens when the fan starts and closes when the fan stops or trips.

b. The standby fan automatically starts when the companion operating fan trips due to motor overload.

c. Standby fan will never start in normal or auto-mode when the companion fan is running.

d. When the operating fan trips due to high building pressure the standby fan will not start.

(2) Tripping

a. Supply and exhaust fans will trip on sensing of low air flow across the operating fan, 30 seconds after it has been started.

b. Supply and exhaust fan will trip due to fan motor overload.

(3) Bypass

There is no bypass provision.

7.7.1.13.3.3 Redundancy/Diversity

Redundancy is not required for this system. However, some redundant equipment does exist.

7.7.1.13.3.4 Actuated Devices

(1) The following devices are actuated by the start of any one of the two auxiliary building supply fans:

a. Outside air isolation damper.

b. Respective discharge isolation damper.

c. Heating and cooling coils control circuit.

(2) The following devices are actuated by the start of any one of the two auxiliary building exhaust fans:

a. Respective discharge air isolation dampers.

b. Modulating pressure control dampers.

7.7.1.13.3.5 Separation

The logic circuits of the auxiliary building HVAC control systems are designed as non-safety-related since these circuits are not required to be operating during abnormal station operating conditions.

7.7.1.13.3.6 Testability

Means have been provided for checking the operational availability of auxiliary building HVAC system supply and exhaust fans separately on a channel basis. The sensor module and control channels are tested separately and jointly during the operation of supply and exhaust fans.

7.7.1.13.3.7 Module Checks

Temperature transmitters, controllers, current relays, auxiliary electric relays, and the damper actuators are easily accessible for testing.

7.7.1.13.3.8 Channel Checks

After checks have been proven to be satisfactory at the module level, each channel is checked and monitored for satisfactory operation.

7.7.1.13.3.9 System Checks

After each channel has been checked and proved to be operating properly, the whole instrument and control system is tested jointly.

7.7.1.13.4 Environmental Considerations

Temperature, pressure, humidity, and radiation dosage are considered in the selection of various instruments, controls and devices for the auxiliary building HVAC system.

7.7.1.13.5 Operational Considerations

The auxiliary building HVAC system is not required during abnormal station operating conditions.

7.7.1.14 Fuel Building HVAC System Instrumentation and Controls

7.7.1.14.1 System Identification

The instrumentation and controls of the fuel building HVAC system are designed to maintain a negative pressure inside the fuel building, containment gas control boundary, reactor water clean-up pump rooms, and emergency core cooling system pump rooms with respect to the outside ambient pressure. The air temperature in accessible and normally inaccessible areas is

controlled to maintain a predetermined temperature range. The fuel building HVAC system is described in detail in Subsection 9.4.2. Supply and exhaust air isolation damper interlocks are nuclear safety-related and described in Subsection 7.3.1.1.9.3.

7.7.1.14.2 Power Sources

Ventilation equipment, instruments, and controls for the fuel building HVAC system are fed from a non-Class 1E power bus except for the supply and exhaust air isolation dampers.

7.7.1.14.3 Equipment Design

7.7.1.14.3.1 Redundancy/Diversity

Redundancy is not required for this system. However, some redundant equipment does exist.

The control systems for the supply and exhaust air isolation dampers are nuclear safety-related and redundant.

7.7.1.14.3.2 Indication and Annunciation

7.7.1.14.3.2.1 Indication on Local Control Panel

Indication is provided on local control panels as follows:

(1) Fuel building HVAC supply and exhaust fans status; i.e., ON, TRIPPED, or OFF.

(2) Supply and exhaust air temperature and flow.

(3) Isolation dampers open and close position.

(4) Supply air heating coil on or off position.

7.7.1.14.3.2.2 Annunciation on Local Control Panel

Annunciation is provided on local control panels as follows:

(1) High and low differential pressure across the fuel building and the surrounding areas.

(2) High supply air temperature.

(3) Fire dampers heat detection (high temperature in the supply and/or exhaust air ducts near the fire dampers).

(4) Freeze protection of the cooling coil when entering air temperature drops below its freeze protection setpoint.

(5) High differential pressure across supply air filters.

(6) Low air flow after a time delay, commencing with supply and exhaust fan start.

(7) Auto-start and auto-trip of the supply and exhaust fans.

(8) Trouble on the local control panel, and any one of the electrical heating coil internal safeties, i.e., air pressure differential switch, automatic high temperature cut-out and manual high-temperature cut-out is not satisfied, is annunciated on a common alarm on the main control board.

7.7.1.14.3.3 Initiating Circuits, Logic, and Sequencing

The instruments and controls functions for each fuel building HVAC system are described below:

(1) Start and Stop

a. Fuel building HVAC supply fans are started and stopped manually by their respective control switches on the local panel.

b. Exhaust air fans are started and stopped manually by their respective control switches on the local panel.

c. Each supply and exhaust fan can be manually stopped by a selector switch on the main control benchboard.

(2) Temperature Control

The supply air temperature is controlled by sequencing the chill water valve and heating coil.

(3) Freeze Protection

Where the air temperature upstream of the cooling coil drops below its freeze protection setpoint, the control air signal to the chilled water valve is automatically cut off and the valve fails open. During cold weather months, the cooling coils are manually isolated and drained to provide additional freeze protection.

(4) Building Pressure Control

The fuel building is maintained at greater than or equal to 0.25 inches vacuum water gauge with respect to atmosphere by modulating the pressure control damper in the supply air duct.

7.7.1.14.3.4 Bypasses and Interlocks

(1) Bypass

There is no bypass provision.

(2) Interlocks

a. The corresponding discharge isolation dampers for each fan automatically opens when the fan starts and closes when the fan stops or trips.

b. The standby fan automatically starts when the companion operating fan trips due to motor overload or any other reason.

c. The standby fan will never start in normal or auto mode when its companion fan is running.

d. When the operating supply fan trips due to high building pressure, the standby supply fan will not start and when the operating exhaust fan trips due to low building pressure, the standby exhaust fan will not start.

e. The supply and exhaust fan will trip after time delay of 30 seconds commencing with fan start on low air flow.

f. The supply and exhaust fan will trip due to fan motor overload.

7.7.1.14.3.5 Actuated Devices

(1) The following devices are actuated by the start of any one of the two fuel building supply fans:

a. Outside air isolation damper.

b. Respective discharge isolation damper.

c. Heating coils control circuit.

(2) The respective discharge isolation damper is actuated by the start of any one of the two fuel building exhaust fans.

7.7.1.14.4 Environmental Consideration

Temperature, pressure, humidity, and radiation dosage are considered in the selection of various instruments, controls, and devices for the fuel building HVAC system.

7.7.1.14.5 Operational Consideration

The fuel building HVAC system is not required to function following a loss of off-site power, design-basis accident, or safe shutdown earthquake. However, the isolation dampers at the fuel building boundary wall will close to effect building isolation on any signal which initiates the standby gas treatment system or upon failure of the instrument air supply.

7.7.1.15 Drywell Cooling and Supplement Drywell Cooling System Instrumentation and Controls

7.7.1.15.1 System Identification

The instrumentation and controls for the drywell cooling and supplemental drywell cooling systems function to limit the environmental temperatures of the various drywell zones within ranges dictated by equipment requirements. The instrumentation is designed to circulate drywell air through fan-coil units to limit the maximum temperature in the following areas:

		Maximum Temperature
1.	Vicinity of recirculation pump motors	135° F
2.	CRD area	135° F
	(during reactor scram)	185° F
3.	Balance of drywell	150° F (1)

(1) Temperatures in localized areas may exceed 150° F provided Equipment Qualification and component/structural integrity are maintained.

7.7.1.15.2 Power Sources

The drywell cooling unit fans, chilled water pumps, refrigeration units, and instrumentation are powered from two independent Division 1 and 2 safety-related buses. Instrumentation and control systems for the drywell cooling system are designed to operate during loss-of-offsite power to prevent actuation of ECCS systems due to high drywell pressure following drywell cooler shutdown. The supplemental drywell cooling system does not operate during loss-of-offsite power. Therefore, it is not powered from Divisions 1 and 2 safety-related buses.

7.7.1.15.3 Equipment Design

7.7.1.15.3.1 Redundancy/Diversity

(1) The drywell cooling HVAC system is designed with sufficient equipment redundancy to ensure continuous operation under normal plant operating conditions. Hence, instruments and controls for each equipment train are not redundant.

(2) Independent control and separation of logic relay cabinets is utilized to ensure reliability.

7.7.1.15.3.2 Indication and Annunciation

7.7.1.15.3.2.1 Indication

Indication is provided as follows:

(1) Drywell cooler fans status, including the supplemental drywell cooling system, i.e., ON, TRIPPED, or OFF.

(2) Drywell chiller status; i.e., ON, TRIPPED, or OFF.

(3) Drywell chilled water pump status, i.e., ON, TRIPPED, or OFF.

(4) Entering and leaving chiller chilled water temperature locally.

(5) Leaving air temperature from each supply fan.

(6) Return air temperature to each coil cabinet.

(7) Ambient temperature throughout various subvolumes of the drywell.

(8) Chilled water flows and the chilled water chiller condenser cooling water pressure.

(9) Relief dampers OPEN and CLOSE position.

(10) Drywell chilled water containment isolation valves OPEN and CLOSE positions.

7.7.1.15.3.2.2 Annunciation on Main Control Board

Annunciation is provided as follows:

(1) Chiller trip due to internal safeties.

(2) No chilled water flow after time delay of 30 seconds commencing with chilled water pump start.

(3) Low condenser water pressure when chiller start is initiated.

(4) Low leaving air temperature from coil cabinets.

(5) Condenser water control valve not open after a time delay of 2 minutes commencing with chiller start.

(6) If both fans in different divisions are running at the same time.

(7) Auto trip for the drywell cooler fans, chiller, and chilled water pump.

(8) Supply air temperature low.

7.7.1.15.3.3 Initiating Circuits, Logic, and Sequencing

The instruments and controls functions for each drywell cooling system are described below:

(1) Start and Stop

a. Drywell cooler fans are started and stopped manually by their respective control switches on the main control board.

b. Chiller starts in response to pushbutton START signal from the main control board or on chiller local panel, provided the two-position ON-STOP control switch furnished with chiller is in the ON position. Chiller stops in response to STOP position of the control switch.

c. Each chilled water pump is started and stopped manually by its control switch on the main control benchboard.

(2) Condenser Water Flow

Condenser water flow provided by the plant service water system is controlled by modulating the motor-operated control valve downstream of the chiller in response to condensing pressure.

(3) Chiller Temperature and Capacity Control

Chiller capacity is controlled electronically. Temperature control is accomplished by feeding the chilled water discharge temperature signal to the chiller temperature control unit.

7.7.1.15.3.4 Bypass and Interlocks

(1) Bypass

There is no bypass provision.

(2) Interlocks

a. Chiller trips automatically when the chilled water pump stops.

b. Proof of chilled water flow is required to permit chiller start.

c. A running chiller permits the chiller condenser cooling water control valve to modulate.

d. Proof of condenser water pressure to permit chiller start.

e. Chilled water containment isolation valves are normally open and will close on high drywell pressure or low reactor water level (LOCA signals).

f. Chillers, pumps, and fans trip on LOCA.

7.7.1.15.3.5 Actuated Devices

(1) Chiller is interlocked with chilled water pump in order to have start circuits energized whenever chilled water pump is running.

(2) Condenser water flow control valve is energized to modulate upon chiller start and is de-energized to fail close upon stop or trip of chiller.

7.7.1.15.4 Environmental Considerations

Temperature, pressure, humidity, and radiation dosage are considered in the selection of various instruments, controls, and devices for the drywell cooling system.

7.7.1.15.5 Operational Consideration

The primary and supplemental drywell cooling systems are not required for safe shutdown of the reactor or during any abnormal operating conditions, but only the primary system will

operate during loss-of-offsite power to prevent drywell pressure from exceeding 2 psig and thus resulting in a false LOCA signal.

7.7.1.16 Drywell Purge System Instrumentation and Controls

7.7.1.16.1 System Identification

(1) The drywell purge system instrumentation and controls function to regulate the pressure in the drywell, and to purge the drywell atmosphere, through filters, to allow personnel access to the drywell under normal operating conditions.

(2) The system consists of three full-capacity filter trains, associated duct, dampers, and controls.

(3) The drywell is purged by shutting the normal containment building exhaust fans, starting the purge exhaust fan on one filter train and opening the appropriate exhaust and inlet valves on the drywell purge connections.

The exhaust air removed from the drywell is made up by allowing some ventilation air from the containment building to flow into the drywell through isolation valves.

The purge air is exhausted from the drywell, mixed with exhausted containment building ventilation air, and is routed to the purge filter units for treatment before release to the common station, HVAC vent.

(4) After an accidental release of radioactivity in the containment building and when conditions permit, a drywell purge filter train can be started to a filter the contaminated ventilation air.

7.7.1.16.2 Power Sources

(1) The drywell and containment purge isolation valves and dampers and instruments and controls associated with them must be operational during normal operational transients and hence they are powered from electrical safety featured (ESF) Division 1 and 2 buses. The low flow exhaust fans on the fan-filter trains are also powered from ESF Divisions 1 and 2 buses.

(2) The fan-filters trains are not required to operate during abnormal operating conditions and hence they are powered from nondivisional electrical sources.

7.7.1.16.3 Equipment Design

7.7.1.16.3.1 System Description

(1) The drywell purge system is manually operated from the main control room to purge the potentially contaminated air from the drywell to permit personnel access therein.

(2) The system is manually operated from the main control room to maintain drywell pressure under 3 psig.

(3) The operation of the containment building isolation valves is required to assure that the offsite dose rates of General Design Criteria 10 CFR 100 are not exceeded. Redundant, air-operated, spring-loaded fail closed valves, are provided to assure isolation. These valves are part of the containment isolation system which is described in Subsection 6.2.4.

7.7.1.16.3.2 Indication and Annunciation

7.7.1.16.3.2.1 Indication on the Main Control Benchboard

(1) Open and close status for the following valves/dampers is indicated as follows:

a. Drywell Purge Supply Outboard Isolation Valve,

b. Drywell Purge Supply Inboard Isolation Valve,

c. Drywell Purge Inboard Isolation Valve,

d. Containment Vent/Purge Isolation Valve,

e. Containment Building Exhaust/Purge Outboard Isolation Valve,

f. Containment Building Exhaust/Purge Inboard Isolation Valve,

g. Drywell Head Purge Exhaust Isolation Valve,

h. Containment Building Exhaust Outboard Isolation Valve,

i. Containment Building Exhaust Inboard Isolation Valve,

j. Containment Exhaust Damper,

k. Drywell Purge Normal Exhaust Damper,

l. Drywell Purge Low Flow Exhaust Damper,

m. Drywell Purge Train Inlet Low Flow Dampers, and

n. Drywell Purge Train Inlet Damper.

(2) On or off status of the electric blast coils and drywell purge low flow protection which are a part of drywell purge filter trains indicated.

(3) Motor-operated deluge valves (which provide fire extinguishing water to the charcoal adsorbers) open or close status is indicated.

(4) Drywell purge exhaust fan and drywell purge low flow exhaust fan status, i.e., ON, OFF, or TRIPPED is indicated.

(5) Air flows for drywell purge exhaust fan and drywell purge low flow exhaust fan is indicated.

(6) Pressure differentials across prefilters and upstream, downstream HEPA filters are indicated locally.

7.7.1.16.3.2.2 Annunciations on the Main Control Benchboard

Annunciators are provided as follows:

(1) Low flow purge heater coil cutoff or trouble due to internal safety interlocks.

(2) Electric blast coil cutoff (via common trouble alarm due to internal safety interlocks).

(3) High charcoal adsorber temperature and high-high charcoal adsorber temperature.

(4) Auto trip for drywell purge exhaust fans and low flow exhaust fans.

(5) High pressure differential across prefilters and HEPA filters on the local control panel.

(6) High radiation level in the containment exhaust and containment pool exhaust.

7.7.1.16.3.3 Initiating Circuits, Logic, and Sequencing

7.7.1.16.3.3.1 Start and Stop

(1) The drywell purge exhaust fans and the low flow exhaust fans can be started and stopped manually by their respective control switches.

(2) Drywell Purge is interlocked with the Containment Ventilation System auto-manual selector switch (A/MSS) and the Containment Ventilation System Mode switch (VQ/VR Mode switch). The Drywell Purge Exhaust Fan start automatically when the respective control switch is in AUTO, the Containment Ventilation System auto-manual selector switch (A/MSS) is in AUTO and the Containment Ventilation System Mode (VQ/VR Mode) switch is placed in any of the following modes:

a. Containment Purge (CP Mode)
b. Containment/Drywell Purge (CDP Mode) or
c. Drywell Head Purge (DHP Mode)

(3) These fans stop automatically from the conditions in item (2) when Neutral or Containment Vent (CV Mode) is selected on the VQ/VR Mode switch.

(4) The A and B Drywell purge exhaust fans will also start automatically when the respective fan control switch is placed in Auto and the Continuous Containment Purge System (CCP) Mode switch is placed in CCP Filtered mode.

(5) The A and B Drywell purge exhaust fans will stop automatically from the conditions in item (4) if the CCP Mode switch is placed in the Off, Manual or Unfiltered positions.

7.7.1.16.3.4 Bypasses and Interlocks

7.7.1.16.3.4.1 Bypasses

None.

7.7.1.16.3.4.2 Interlocks

(1) The drywell purge supply isolation valves will open automatically when their respective control switch is placed in Auto, the A/MSS switch is in Auto and CDP or DHP mode is selected on the VQ/VR Mode switch.

a. The valves close automatically when CV or CP mode is selected on the VQ/VR Mode switch or when any one of the following containment isolation signals are present:

high drywell pressure,

low reactor water level,

high radiation in the refueling pool exhaust duct,

high radiation in the containment building exhaust duct, and high radiation in the continuous containment purge exhaust duct.

b. The valves cannot be opened manually or automatically if any one of the containment building isolation signals given in item (1a) are present.

(2) The drywell purge inboard isolation valve will automatically open either fully or partially when the control switch is placed in Auto, the A/MSS switch is in Auto and CDP Mode (100% open) or DHP Mode (50% open) is selected on the VQ/VR Mode switch.

a. Refer to item (1a) for automatic closure.

b. Refer to item (1b) for other interlocks.

(3) The Containment ventilation/purge isolation valve will automatically open either partially or fully when the control switch is in Auto, the A/MSS switch is in Auto and the VQ/VR Mode switch is any one of the following positions.

CV Mode - Full open

CP Mode - Full open

CDP Mode - Half open (normal flow) or quarter open (half flow)

DHP Mode - Half open (normal flow) or Quarter open (half flow)

a. For automatic closure refer to containment isolation signals given in item (1a).

b. For other interlocks refer to item (1b).

(4) The Containment exhaust/purge isolation valves will open automatically when their respective control switch is placed in Auto, the A/MSS switch is in Auto and any mode except Neutral is selected on the VQ/VR Mode switch.

a. For automatic closure refer to item (3a).

b. The valves cannot be opened manually in the presence of high drywell pressure. The valves will not open automatically when any one of the containment isolation signals given in item (1a) are present. When these valves are closed, the drywell purge exhaust fans cannot be started except as noted in item (4c).

c. The A or B Drywell purge exhaust fans can be started to support Continuous Containment Purge (CCP) system without the containment exhaust/purge isolation valves being opened if the CCP containment exhaust isolation valves are open.

(5) The Drywell head purge exhaust isolation valve will open automatically when the control switch is placed in Auto, the A/MSS switch is in Auto and DHP mode is selected on the VQ/VR Mode switch.

a. The valve will close automatically when CV, CP or CDP mode is selected on the VQ/VR Mode switch.

b. For other interlocks refer to item (1b).

(6) The containment building exhaust isolation bypass valves cannot be opened when the containment pressure is greater than 3 psig.

(7) The Containment exhaust damper will open automatically when the control switch is placed in Auto, the A/MSS switch is in Auto and CV mode is selected on the VQ/VR Mode switch.

The damper will close automatically when Netural, CP, CDP or DHP mode is selected on the VQ/VR Mode switch.

(8) The Drywell purge normal exhaust damper will open automatically when the control switch is placed in Auto, the A/MSS switch is in Auto and CP, CDP or DHP mode is selected on the VQ/VR Mode switch.

The damper will close automatically when Neutral or CV Mode is selected on the VQ/VR Mode switch.

(9) Drywell purge trains A and B inlet low flow dampers will open when the respective drywell purge low flow exhaust fan is operating. The C inlet low flow

damper will open when Low Flow Purge is selected on the Filter Train C Low Flow Lineup selector switch on the main control room benchboard.

a. The A and B inlet low flow dampers will close when the respective low flow exhaust fan is not operating. The C inlet low flow damper will close when Stop or PASS (Post Accident Sample System) Purge is selected on the Filter Train C Low Flow Lineup selector switch.

(10) Drywell purge train A,B,C inlet dampers and exhaust fans isolation dampers are interlocked to open automatically when the respective exhaust fan starts in CP, CDP or DHP mode as selected on the VQ/VR Mode switch or when the drywell purge exhaust fan is manually operated.

a. The damper will close automatically with exhaust fan shutdown when Neutral or CV mode is selected on the VQ/VR Mode switch or if the fan is shutdown manually.

b. These dampers are interlocked to close automatically with the exhaust fan shutdown when the respective fire protection deluge valve for the charcoal adsorber is open.

When Continuous Containment Purge system is operated in Filtered mode, the normal inlet damper for Drywell purge train A or B remains closed and a separate inlet damper will open automatically when the respective A or B Drywell purge exhaust fan is operating. The damper will close automatically when the respective A or B Drywell purge exhaust fan is not operating.

(11) The drywell purge trains A and B low flow isolation (outlet) dampers will open under the same conditions discussed in item (9). The C purge train low flow isolation damper will open when Low Flow Purge or PASS Purge is selected on the Filter Train C Low Flow Lineup selector switch.

a. The A and B low flow isolation dampers will close under the same conditions discussed in item (9a). The C low flow isolation damper is closed when Stop is selected on the Filter Train C Low Flow Lineup selector switch.

(12) The motor operating deluge valves which provide fire extinguishing water into the charcoal adsorbers have a permissive interlock such that they can only be opened when the high-high temperature alarm, furnished with the filter train unit is activated.

When these valves are opened, the respective drywell purge exhaust fan will stop. In addition, the respective inlet and outlet dampers for the filter train shall close and the solenoid actuated drain valve, furnished with the filter train, shall open.

(13) The PASS panel purge inlet damper to the drywell purge system is opened by placing the Filter Train C Low Flow Lineup selector switch in the PASS Purge position. The damper will close if Stop or Low Flow Purge is selected on the Filter Train C Low Flow Lineup selector switch.

7.7.1.16.3.5 Actuated Devices

(1) The drywell purge low flow heaters are energized by the respective drywell purge low flow exhaust fan provided that air flow is proven by the differential pressure switches furnished with each filter train. The electric blast coil heaters are energized provided the respective control switch is in Auto, the respective drywell purge exhaust fan is energized and air flow is proven by the differential pressure switches furnished with each filter train.

a. The heaters are automatically deenergized by low air flow, abnormally high temperature at the heater or shutdown of the respective fan.

b. The electric blast coils can be energized by their respective control switches on the main control benchboard only if condition (1) is satisfied.

(2) The drywell purge exhaust fans will trip on any of the following: low flow after a set time delay commencing with fan start, no containment building ventilation supply fan operating after a time delay, opening of the fire protection deluge valve, closure of the containment building exhaust/purge isolation valves or high temperature at the purge filter train inlet fire damper.

When utilized to support Continuous Containment Purge (CCP) system, the A and B drywell purge train exhaust fans will trip if no CCP supply fan is running after a time delay or the CCP exhaust isolation valves are not open.

The drywell purge train inlet dampers and drywell purge exhaust fan isolation dampers will open when the fan starts, and will close when the fan stops.

(3) The drywell purge train is secured prior to manual initiation of the respective deluge fire protection system.

Drywell purge train A and B low flow inlet dampers and fan isolation dampers will open when the respective fan is started and will close when the fan is stopped.

The drywell purge train C low flow inlet and fan isolation dampers are controlled as discussed in subsection 7.7.1.16.3.4.2 items (9) and (11).

(4) The PASS panel purge inlet damper to the drywell purge system is controlled by use of the Filter Train C Low Flow Lineup selector switch as discussed subsection 7.7.1.16.3.4.2 item (13).

7.7.1.16.4 Environmental Considerations

Temperature, pressure, humidity, and radiation dosage are considered in the selection of various instruments, controls, and devices for the drywell purge system.

7.7.1.16.5 Operational Considerations

(1) The drywell purge system is not safety-related except for those portions which provide containment isolation.

(2) The drywell purge isolation valves must be operational during all abnormal operational transients and are normally closed, fail-closed valves.

(3) The fan-filter trains are not required to operate during abnormal operating conditions.

7.7.1.17 Containment Building HVAC Instrumentation and Controls

7.7.1.17.1 System Identification

(1) The containment building ventilation system instrumentation and controls are designed to supply filtered, heated, or cooled air to the general areas through a central fan system consisting of an outside air intake, filters, a heating coil, a cooling coil, two 100% capacity supply air fans, and supply air ductwork.

(2) The system instrumentation and controls are designed to maintain potentially contaminated cubicles at a slightly lower pressure than the surrounding accessible areas and therefore the air flows from the accessible areas to these shielded cubicles before it is exhausted.

(3) The exhaust duct from the refueling floor will be provided with radiation monitors which will automatically initiate containment isolation and standby gas treatment startup on high radiation detection. The time required to completely close the isolation valve, after high radiation is detected, is less than 12 seconds.

(4) The containment building ventilation isolation valves are designed for fail safe operation. These valves are operated by spring loaded air cylinders which fail closed on loss of station air or loss of electrical power.

(5) The containment building is maintained at a minimum of 1/4 inch water negative pressure with respect to outdoor atmosphere by modulating the supply air flow through the pressure control damper.

(6) The control system is designed to exhaust more air from the operating floor than supplied, to draw air from adjacent accessible areas, thereby minimizing the possibility of potentially contaminated air from the containment building migrating to clean areas of the operating floor.

(7) Fan-coil units are located in accessible and inaccessible areas as required to remove generated heat and to maintain temperatures within the required ranges.

7.7.1.17.2 Power Sources

The containment building isolation valves which are common to both the drywell purge system and containment building ventilation system, and the continuous containment purge system isolation valves, must maintain their structural and functional integrity during and after abnormal operating conditions. Hence, Divisions 1 and 2, Class 1E power sources are provided for these valves.

7.7.1.17.3 Equipment Design

The containment building ventilation system is non-safety-related, except for the containment isolation valves and the piping between them.

7.7.1.17.3.1 Indication and Annunciation

7.7.1.17.3.1.1 Indication

Indication is provided as follows:

(1) Containment building HVAC supply and exhaust fans status, i.e., ON, TRIPPED, or OFF.

(2) Heating coil ON or OFF.

(3) Supply filter pressure differential.

(4) Supply and exhaust air temperature and flow rate.

(5) Supply and exhaust fan isolation dampers open and close position.

(6) Speed selection (only fast speed is operable), lead-lag, and mode indication for the supply air fans.

7.7.1.17.3.1.2 Annunciation on Local Control Board

Annunciation is provided at the local control panel as follows:

(1) High supply air temperature

(2) High supply air filter differential pressure

Annunciation is provided at the main control room panel as follows:

(1) Supply and exhaust fan auto start and auto trip

(2) Low supply air flow

(3) Low exhaust air flow

(4) Low air temperature at cooling coil inlet

(5) High or low building differential pressure, with respect to outside ambient

(6) Local control panel trouble or alarm condition

7.7.1.17.3.2 Initiating Circuits, Logic, and Sequencing

The instruments and controls function for each HVAC system component is described below.

(1) Start and Stop

a. Each supply fan can be manually started by its control switch, if the Containment Ventilation System auto-manual selector switch (A/MSS) is in manual. (A fan/speed selector switch must also be aligned to select the fan to be started. The original slow/fast speed capability of these fans is now reduced to fast speed only.)

The supply fans are interlocked with the Containment Ventilation System auto-manual selector switch (A/MSS) and the Containment Ventilation System Mode (VQ/VR mode) switch. A supply fan will automatically start if its control switch is in auto, the A/MSS switch is in auto, and the VQ/VR switch is in the containment ventilation or any purge position. (The fan/speed selector switch will determine which fan starts.)

Each fan can be manually stopped by its control switch.

The supply fans, when running in auto, automatically stop if:

- The Containment Ventilation System auto-manual selector switch (A/MSS) is placed to manual.
- The Containment Ventilation System Mode (VQ/VR Mode) switch is removed from the containment ventilation, or any purge mode.
- When running in the containment ventilation mode and no drywell purge fans are running.
- When running in any purge mode and no containment exhaust fans are running.

The supply fans, when running in either manual or auto, automatically stop if:

- A low flow is sensed for a prolonged time period, longer than a time delay.
- Either supply containment isolation valve fully closes.
- Fan motor overload cutout.

b. Each exhaust fan can be manually started by its control switch.

One fan will start automatically when the respective control switch is in Auto, the Containment Vent (CV Mode) is selected on the Containment Ventilation Mode (VQ/VR Mode) switch and Auto is selected on the Containment Ventilation System auto-manual selector (A/MSS) switch. (A selector switch will determine which fan will be the lead start).

Each fan can be manually stopped by its control switch.

The fans will stop automatically when Auto is selected on the A/MSS switch and either Neutral or one of the following modes is selected on the VQ/VR Mode switch.

- Containment Purge (CP mode).
- Containment/Drywell Purge (CDP mode).
- Containment/Drywell/Head Purge (DHP mode).

or if one of the following conditions apply

- Fan motor overload.
- Low airflow after a time delay commencing with fan start.
- Closure of the containment building exhaust/purge outboard or inboard isolation valves.
- Trip of both containment building supply fans.

(2) Temperature Control

Supply air temperature shall be controlled by sequencing the chilled water valve and the electric heating coil.

(3) Freeze Protection

When potential freezing conditions are sensed by either one of the two linear temperature sensors (one on the floor of duct, the other in the airstream) located at the upstream side of the coil, an alarm is annunciated on a main control room panel and the chilled water flow control valve fully opens. During cold weather months, the cooling coils are manually isolated and drained to provide additional freeze protection.

(4) Building Pressure Control

The containment building pressure is maintained at 1/4 inch w.g. negative with respect to the atmosphere by modulating the pressure control damper on the supply air line.

7.7.1.17.3.3 Bypasses and Interlocks

(1) Bypass

There are no bypass provisions.

(2) Interlocks

a. It is not possible for both supply or both exhaust fans of a unit to operate at the same time. Standby fans have a permissive interlock to start automatically on auto trip of the companion operating fan.

b. The electric heating coil cannot be energized if neither supply fan is operating.

c. Both containment building supply air isolation valves must be at least partially open before either supply fan can be started.

The valves cannot be opened manually when the following containment building isolation signals are present:

- High Drywell Pressure
- Low reactor water level

The valve will not open automatically when any of the following containment building isolation signals are present.

- High drywell pressure
- Low Reactor Water Level
- High radiation in the containment building refueling pool exhaust duct
- High radiation in the containment building exhaust duct
- High radiation in the containment continuous purge duct

d. The exhaust fan can be started only when the containment building exhaust/purge isolation valves are fully open.

e. The containment building supply air isolation bypass valves cannot be opened by their control switches when the containment pressure is greater than 3 psig.

7.7.1.17.3.4 Actuated Devices

(1) The outside air damper will open when either supply fan starts and closes when both fans are not operating.

(2) The supply and exhaust fan isolation dampers will open when the corresponding fan starts and close when the corresponding fan stops.

(3) Containment building supply air isolation valves will open automatically when their control switches are in the auto position, and the Containment Ventilation System Mode (VQ/VR Mode) switch is in the containment vent or any purge position. The valves will close automatically when the containment building isolation signals mentioned in subsection 7.7.1.17.3.3 are present.

7.7.1.17.4 Environmental Consideration

Temperature, pressure, humidity, and radiation dosage are considered in the selection of various instruments, controls, and devices for the containment building HVAC system.

7.7.1.17.5 Operational Consideration

(1) The containment building ventilation system is not safety-related and is not required to assure either the integrity of the reactor coolant pressure boundary or the capability to shut down the reactor and maintain it in a safe shutdown condition.

(2) The operation of the containment building isolation valves is required to assure that the offsite dose rates of General Design Criteria 10 CFR 100 are not exceeded. Redundant, air-operated, spring-loaded fail closed valves are provided to assure isolation. Thus on a loss of control power, or control air, the valve close.

(3) The containment building ventilation system operates continuously during normal plant operation (including normal shutdown) to ventilate the containment building and to limit the maximum and minimum air temperatures therein. The ventilation function provides control of airborne radioactivity levels.

(4) The system incorporates features to assure its reliable operation over the full range of normal station operations. These features include the installation of redundant principal system components.

7.7.1.18 Radwaste Building HVAC Instrumentation and Controls

7.7.1.18.1 System Identification

(1) The radwaste building ventilation system instrumentation and controls are designed to supply filtered, heated, or cooled air to the general areas through a central fan system consisting of an outside air intake, filters, a heating coil, a cooling coil, two 100% of full capacity supply air fans, and supply air ductwork.

(2) The potentially contaminated cubicles are maintained at a slightly lower pressure than the surrounding accessible areas and therefore the air flows from the accessible areas to these shielding cubicles before it is exhausted.

(3) The radwaste building ventilation system instrumentation and controls function to maintain the radwaste monitoring area at a temperature of 73° F ± 1° F through a central system consisting of a packaged water cooled air handling unit. A slight positive pressure in this room is maintained with respect to adjacent areas to preclude the infiltration of potentially contaminated air.

(4) By exhausting more air than is being supplied, a negative differential pressure, with respect to atmospheric pressure, of 0.25 inch w.g. is maintained in the Radwaste building with the exception of the machine shop, which is maintained at negative 0.125 inch w.g., with respect to atmospheric pressure. This is done to preclude exfiltration of contaminated air to the outside atmosphere. The storeroom area is maintained at atmospheric pressure.

7.7.1.18.2 Power Sources

Ventilation equipment, instruments, and controls for the radwaste building HVAC system are fed with power from non-Class 1E power buses.

7.7.1.18.3 Equipment Design

7.7.1.18.3.1 Redundancy/Diversity

(1) Instrumentation and controls are not redundant for the radwaste building HVAC system since redundant principal components have been provided.

(2) The system is non-nuclear safety-related.

7.7.1.18.3.2 Indication and Annunciation

7.7.1.18.3.2.1 Indication on Local Control Panel

Indication is provided as follows:

(1) Pressure differential indication on the package filter units.

(2) Radwaste building HVAC supply and exhaust fans status, i.e., ON, TRIPPED, or OFF.

(3) Supply and exhaust air temperature.

(4) Packaged filter unit isolation dampers open and close position.

(5) Supply and exhaust fan isolation dampers open and close position.

(6) Supply air heating coil ON or OFF status and any one of heating coil safeties (air flow switch, automatic high temperature cutout, and manual high temperature cutout) are not satisfied.

(7) Pressure differential indication between various locations in the radwaste building and the atmosphere.

7.7.1.18.3.2.2 Annunciation on Local Control Panel

Annunciation is provided as follows:

(1) High and low differential pressure between the radwaste building and the atmosphere.

(2) Trouble on local panels is annunciated in the radwaste operation center.

(3) Low air flow after a time delay commencing with supply and exhaust fan start.

(4) High pressure differential across the packaged filter unit.

(5) Deleted.

(6) Freeze protection of the cooling coil when it receives air below its freeze protection setpoint.

(7) Auto start and auto trip of the supply and exhaust fans.

(8) When all isolation dampers of the packaged filter unit are fully closed and any exhaust fan is running.

(9) High supply air temperature.

7.7.1.18.3.3 Initiating Circuits, Logic, and Sequencing

(1) Start and Stop

a. Each radwaste building HVAC supply and exhaust fan can be manually started by its control switch on the local control panel or by a control switch in the radwaste operations center. A control switch on the local control panel will determine from which panel the fan will be started.

b. Each fan can be manually stopped by its control switch on the local control panel or from the radwaste operation center.

(2) Temperature Control

Supply air temperature is controlled by sequencing the chilled water valve and the electric heating coil.

(3) Freeze Protection

Two linear temperature sensors (one on floor of duct, the other in the airstream) located at the upstream side of the coil indicate freezing conditions.

When the air temperature upstream of the cooling coil is below its freeze protection setpoint, the control air signal to the chilled water valve is automatically cut off and the valve fails open. During cold weather months, the cooling coils are manually isolated and drained to provide additional freeze protection.

(4) Building Pressure Control

In the Radwaste building; pressure is maintained at negative 0.25 inch w.g., with the exception of the machine shop area which is maintained at negative 0.125 inch w.g., and the storeroom area which is maintained at 0.00 inch w.g. with respect to the average atmospheric pressure by modulating the pressure control damper on the supply air duct. The damper modulates in response to a signal from an averaging relay which computes the mean pressure differential between the Radwaste building and outside.

7.7.1.18.3.4 Bypasses and Interlocks

(1) Bypass

There is no bypass provision.

(2) Interlocks

a. The corresponding discharge isolation dampers for each fan automatically open when the fan starts and close when the fan stops or trips.

b. Standby fans have a permissive interlock to start automatically on auto trip of the companion operating fan.

c. It is not possible for both supply fans or both exhaust fans to operate at the same time.

d. When the operating supply fan trips due to high building pressure, the standby supply fan will not start. When the operating exhaust fan trips due to low building pressure, the standby exhaust fan will not start.

e. The supply and exhaust fan will trip on low air flow after a time delay commencing with fan start.

f. The supply and exhaust fan will trip due to fan motor overload.

7.7.1.18.3.5 Actuated Devices

(1) The following devices are actuated by the start of any one of the two radwaste building supply fans:

a. Outside air isolation damper.

b. Respective discharge isolation damper.

c. Heating coils control circuit.

(2) Respective discharge isolation dampers are actuated by the start of either one of the two radwaste building exhaust fans.

7.7.1.18.4 Environmental Consideration

Temperature, pressure, humidity, and radiation dosage are considered in the selection of various instruments, controls, and devices for the radwaste building HVAC system.

7.7.1.18.5 Operational Considerations

The Radwaste facility HVAC system operates during normal plant operation to ventilate the radwaste building and to limit the maximum and minimum air temperatures therein and to provide control over in-plant airborne radioactivity and the release to the environment. The

system is not required to operate following a loss of offsite power, design-basis accident, or safe shutdown earthquake.

7.7.1.19 Process Radiation Monitoring System - Instrumentation and Controls

The radiation monitoring system includes the following categories of equipment. Description of each category is contained in the references sections:

(1) Safety-Related Process Radiation Monitors (Subsection 11.5.2 and 7.6.1.2).

(2) Independent analog radiation monitors for interlocking the containment building refueling platform and the fuel building fuel handling platform and for the containment building polar crane. (Subsection 12.3.4).

(3) Area radiation monitors (Subsections 12.3.4 and 7.7.1.9).

(4) Off-line liquid process radiation monitors (Sections 11.5.2 and 7.7.1.19).

(5) Off-line gaseous radiation monitors (Subsections 11.5.2, 12.3.4, and 7.7.1.19).

7.7.1.19.1 System Identification

7.7.1.19.1.1 General

The process radiation monitors (PRM) described are those not required for safety.

The following off-line liquid process radiation monitors are provided to measure, indicate, and record the levels of radiation and radioactivity associated with the coolant and process streams and in the effluents released from the plant:

(1) Plant Service Water Effluent (one).

(2) Shutdown Service Water Effluent (two).

(3) Fuel Pool Heat Exchanger Service Water (two).

(4) Component Cooling Water (one).

(5) Liquid Radwaste Discharge (one).

The following off-line gaseous radiation monitors are provided to measure, indicate, and record the levels of radiation and radioactivity associated with condenser off-gas and ventilation (including effluent flow from plant areas):

(1) Pretreatment Air Ejector Off-Gas.

(2) Post-treatment Air Ejector Off-Gas (two).

(3) Standby Gas Treatment System (SGTS) Exhaust (two).

(4) Common Station HVAC Exhaust (two).

(5) Continuous Airborne Radioactivity Monitors (CAM) (refer to Subsection 12.3.4 for quantities and application).

7.7.1.19.1.2 Classification

The PRM System monitors described, as identified in Subsection 7.7.1.19.1.1, are classified as not related to safety.

7.7.1.19.1.3 Reference Design

There is no reference design for this system.

7.7.1.19.2 Power Sources

The power sources for the PRM System described are the 120-Vac instrument buses (nonessential).

7.7.1.19.3 Equipment Design

The off-line PRM's include a sampling assembly, detector(s), signal conditioning equipment, and a digital processor.

The sampling assembly is a closed, sealed system and includes a sampling pump, valves, interconnecting piping, fitting, sample chamber (shielded), flow indicator, and for gaseous monitors only, filters, pressure indication, flow regulator and flow sensor assembly to make the flow correction automatically (except Pretreatment Air Ejector Off-Gas monitor).

7.7.1.19.4 Circuit Description

The circuitry of each PRM includes detectors, detector signal conditioners, pump and valve controls, and a digital processor. Each monitor's circuitry is similar and differs in the quantity of detector's and in the quantity and function of valves on the sampling assembly which are controlled.

The detectors provided for each type of PRM are as follows:

(1) Each liquid PRM contains one gamma scintillation detector.

(2) The Pre-Treatment Air Ejector Off-Gas monitor contains one GM tube detector.

(3) Each CAM contains five detectors including three for measuring airborne radioactivity and two for measuring background radioactivity.

a. Particulate: beta scintillation detector,

b. Iodine: sodium iodine detector, gain stabilized; two channels, one for I-131 radioactivity measurement, and the other adjacent channel for background radiation,

c. Noble Gas: beta scintillation detector,

d. Gamma (external background): GM tube detector

e. Alpha (naturally occurring Rn and Th background): Silicon diffused junction detector.

(4) Each Post-Treatment Air Ejector Off-gas monitor, SGTS exhaust monitor and common station HVAC stack monitor contains the same five detectors as above plus an additional GM tube detector for high range noble gas activity measurements.

Valves on the sample assembly are controlled in the required sequence by the system to allow flushing or purging of the monitor. Pump on/off controls are also provided.

For the Liquid Radwaste Discharge Radiation Monitor, additional controls for pump on/off control, source check initiate, and flushing are provided remotely at the liquid radwaste control panel.

The detector signal converter converts the detector signal to a digital signal.

The digital processor receives the detector signals and provides the following features or capabilities:

(1) Calculations of the following, depending on the detectors provided:

a. Corrected particulate radioactivity (subtracking noble gas contributions or alpha (radon daughter) and gamma background),

b. Corrected iodine radioactivity (adjacent window single channel analyzer used for background subtraction),

c. Corrected noble gas radioactivity (subtracking gamma contributions),

d. Gamma background subtraction done with an empirically determined fraction of the count entered via a control terminal.

(2) Local warning lights and audible alarm (on certain monitors only) for high radiation, and instrument failure trips.

(3) Local and remote trip reset.

(4) Local digital display, reading out in:

a. Engineering units (as edited) for all detectors

b. Micro Ci/cc for liquid PRMs, noble gas channels

c. Micro Ci for deposited particulate and iodine (Micro Ci/cc for certain monitors).

(5) Capability of transmitting radiation data, alarm information, and monitor status to the control terminal.

(6) Ability to initiate source checks in order to facilitate maintenance and surveillance checks.

(7) Ability to retain data for a limited amount of time upon loss of power.

(8) Ability to condense, average, and store data available to it.

(9) One set of status lights: NORMAL, MAINTENANCE, FAIL, HIGH, ALERT, and TREND. These lights indicated the status of the channel selected for display. The operation of the Trend Alarm is based on increasing radiation intensity (count rate) over a 10-minute period compared to the prior 10-minute period.

7.7.1.19.5 Testability

Each detector, except alpha background detectors, may be tested by initiating a source check. The sequence of the source check is as follows:

(1) Initiate source check functions.

(2) System acquires the current reading.

(3) The check source is actuated.

(4) The system prints the check source status.

(5) System acquires the check source data.

(6) The system prints the time and date, the current reading, check source reading, net reading, the result of test, alarm setting, and operational status on return.

A pulse generator may be connected to a DAM to verify the correlation between detector counts per minute and display data.

7.7.1.19.6 Environmental Consideration

Each monitor is designed to meet the following environmental considerations:

(1) Less than a 10% change in calibration or response per decade reading shall occur for temperature between 65° F and 120° F.

(2) Less than a 10% change in calibration or response per decade reading shall occur for relative humidity between 5% and 100%.

(3) No change in calibration or response for pressure between -1.0 inch of water and 2 psig.

7.7.1.19.7 Operational Considerations

7.7.1.19.7.1 General Information

Monitors have local indication and may have remote communication to the main control room, as described in Chapter 12. All operator actions require the use of a control terminal. In addition, local controls are provided for alarm acknowledgment, source check actuation, and where applicable, purge/flush and pump controls.

7.7.1.19.7.2 Reactor Operator Information

Reactor operator information is provided by the central control terminal located in the main control room. The central control terminal is described in Subsection 7.7.1.9.5. *

7.7.1.19.7.3 Setpoints

The basis for setpoints is described in Subsections 11.5.2 and 12.3.4.

7.7.1.19.8 Actuated Devices

The monitors which actuate devices are the Post-Treatment air ejector off-gas and the liquid radwaste discharge radiation monitors. These actions are described in Subsection 11.5.2.

7.7.1.20 Fire Protection and Suppression System

7.7.1.20.1 System Identification

7.7.1.20.1.1 General

The fire protection and suppression system is related to the power generation control complex (PGCC) is described below. A detailed description and analysis of the PGCC can be found in General Electric topical report NEDO-10466-A; "Power Generation Control Complex."

The defense in depth concept of fire protection and suppression is implemented in the PGCC/control room configuration by operator use of hand-held fire extinguishers as a backup during control room fires.

The total plant fire protection and suppression system will be found in Section 9.5.

7.7.1.20.1.2 Classification

The PGCC fire protection and suppression system is classified as not related to safety.

7.7.1.20.2 Power Sources

The fire detection, alarm, and actuation systems are provided with primary and secondary (battery) power supplies. The primary system is 115-Vac.

7.7.1.20.3 Equipment Design

7.7.1.20.3.1 General

The PGCC fire protection and suppression system consists of products of combustion and rate of rise/temperature detectors and a Halon 1301 fire suppressant system. (In-plant fire water service and distribution systems are described in Section 9.5.)

---

* “With regard to HVAC PRM PR001, PR002, PR003, PR004, PR035, and PR041, the Low Count Rate Alarm functions as described in 7.7.1.9.5 except the criteria for actuation is 30-minutes.”

7.7.1.20.3.2 Equipment Arrangement

PGCC design provides a defense-in-depth approach to fire protection. Each floor section contains at least four smoke detectors and eight thermal detectors. Fire stops of RTV/silicon rubber foam are installed in the cable ducts. A Halon 1301 extinguishing agent is introduced into the floor section cable ducts via a header manifold and nozzle distribution system. This provides at least a 6% concentration of Halon within 10 seconds of activation; there is sufficient Halon to maintain this concentration for at least 10 minutes. In addition, the floor plate design allows for quick removal so that the main control room operators may use hand-held fire extinguishers when required.

There are four smoke detectors in each termination cabinet. Smoke detectors are also located in the main control room panel bays.

The detectors and manifold piping and distribution system is part of the PGCC/control room complex.

7.7.1.20.4 Environmental Considerations

PGCC fire protection system will operate satisfactorily through a temperature range of -40° F to +120° F and through a humidity range from 10% to 90% relative humidity.

7.7.1.20.5 Operational Considerations

7.7.1.20.5.1 General

The PGCC detectors provide alarm annunciation in the main control room.

7.7.1.20.5.2 Reactor Operator Information

Defense-in-depth is again implemented by the reactor operator upon failure of initiation of the Halon system. As an option he can use the hand-held fire extinguishers.

7.7.1.20.6 Setpoints

Products of combustion detectors respond to .003 grams of product per cubic foot of air. The thermal detectors respond to a temperature rate of rise of 15° F per minute (minimum) or an ambient temperature of 140° F (minimum).

7.7.1.21 Display Control System (DCS)

7.7.1.21.1 General

Through the DCS and its color displays located on the PPC, the operator receives all pertinent information concerning the normal operation and status of plant systems. Primary data is measured directly from plant process inputs and supporting information is available from the Performance Monitoring System (PMS) described in Section 7.7.1.7. Considerable flexibility is provided in display formats to accommodate the various plant operating modes. The design utilizes both modularity and redundancy to ensure a highly reliable system. It is emphasized that such redundancy is provided to secure the benefits of operational continuity. The DCS

computer system is not safety-related and is not necessary to determine the status or proper performance of any safety system.

7.7.1.21.2 Hardware Configuration

Plant process data are received and signal conditioned by the remote analog and digital units. Process inputs are checked by the two data acquisition processors and then transmitted to each of two display control processors, provided there is a significant change in the data since they were last transmitted. Common memory connections and flexible priority interrupt structures permit the direct interchange of information with the Performance Monitoring System (PMS). The display control processors format data from the data acquisition processors in the DCS and from PMS into the required graphical and tabular displays. This information is then transferred to the display generators and then to the displays.

The operator initially selects the set of DCS processors which are to be active. The other processors are in operational standby so that they will be ready to take over the display control function if failure is detected. Detection of Display Control System failures is accomplished by the Test and Reconfiguration Unit (TRU).

The TRU receives DCS elements status signals from the data acquisition and display control processors, and performs logical operations on the status signals; it annunciates failures and automatically switches the active operations path to bypass the failed element.

The TRU has the ability to accept an Operator manual override control signal which takes precedence over a TRU decision as to which processors shall be active.

Although display control processor inputs to the display generators are verified by the technique described above, display failures are not detected by the Test and Reconfiguration Unit. Changing display symbols transmitted continuously to a dedicated portion of each display screen may be readily verified by the operator for assurance that he is receiving a dynamic display. In addition, the operator may select a single predefined format to test any given display. If the operator detects a malfunction of any display, he may switch the desired format to an alternate display.

7.7.1.21.3 Selection of Displays

To accommodate varying plant conditions and operating information requirements, considerable flexibility is allowed in the selection and presentation of the various formats which the system can display. The operator establishes communication with the Display Control System by operating switches located adjacent to each display. These, and other DCS controls located on the PPC may be operated as follows:

(1) System Assignment - A switch located adjacent to each display allows the operator to assign the displays for any of the predefined systems to that display. Since system formats are normally displayed on the display directly above the control devices for that system, this control would be used primarily in the event of display failure.

(2) Format Selection - A second switch located adjacent to each display allows the operator to display any one of the formats normally associated with the system assigned to that display. In addition to codes for formats, the switch includes

"Combined," "Master," and "Display Test" positions. The "Combined" position selects formats for use in the event of partial DCS failure. These formats may combine the process variables of two system groups and may not include those process variables that remain conventionally hardwired.

(3) Master Display Select - An array of pushbutton switches at the near-center (operator's left hand) of the console may be operated to cause all displays to display those formats most appropriate to a given plant operating activity. Typically, the operator might select a pushbutton labeled "Approach to Critical," thereby causing all displays to display preselected formats most helpful during that phase of operation. Each display will respond to this selection only if its Format Selection Switch is in the "Master" position. The purpose of the Master Display Select Switch is to reduce operator effort necessary in setting up individual displays for a specific operating activity.

(4) Menu Select - (Menu -- identifies the system group process variables and the formats wherein these process variables are contained. A pushbutton is provided with each display for displaying the Menu. When this button is depressed, the display will display the Menu of a system group selected through the system assignment switch. The Menu displays only for the duration the Menu pushbutton is depressed. During the interval that the Menu button is depressed, any other format requested on the display is overridden.

The configuration of the display system is such that the operator is provided with dynamically updated information. The rate at which the computer system updates the display generators and the speed at which the display generators present video information to the displays is such that changes to displays appear to be instantaneous to the operator.

7.7.1.22 Source Range Monitor (SRM) Subsystem

7.7.1.22.1 Equipment Design

7.7.1.22.1.1 Circuit Description

The SRM provides neutron flux information during reactor startup and low flux level operations. There are four SRM channels. Each includes one detector that can be physically positioned in the core from the main control room (see drawing E02-1NR99).

The detectors are inserted into the core for a reactor startup or in shutdown condition. They can be withdrawn if the indicated count rate is between present limits or if the IRM is on the third range or above (see drawing E02-1NR99).

During shutdown, neutron flux is monitored by source range monitoring instrumentation channels. When the shorting links are removed the source range monitors provide a scram signal when a preset flux level of any channel has been reached. In addition, the logic configuration for the IRM and APRM trips are changed to non-coincidence scram trips while the shorting links are removed.

(1) Power Supply

The power for the monitors is supplied from the four separate 120 Vac NSPS buses. One monitor is powered from each bus (see drawing E02-1NR99).

(2) Physical Arrangement

Each detector assembly consists of a miniature fission chamber and a low-noise, quartz-fiber-insulated transmission cable. The sensitivity of the detector is 1.2 x 10-3 cps/nv nominal, 5.0 x 10-4 cps/nv minimum, and 2.5 x 10-3 cps/nv maximum. The detector cable is connected underneath the reactor vessel to the multiple-shielded coaxial cable. This shielded cable carries the pulses to a pulse current preamplifier located outside the drywell.

The detector and cable are located inside the reactor vessel in a dry tube sealed against reactor vessel pressure. A remote-controlled detector drive system moves the detector along the dry tube. Vertical positioning of the chamber is possible from above the centerline of the active length of fuel to 30 inches below the reactor fuel region (see Figure 7.6-10, SRM/IRM neutron monitoring unit and 7.6-11, detector drive system schematic). When a detector arrives at a travel end point, detector motion is automatically stopped. SRM drive control arrangement and logic are presented in Figure 7.6-11, detector drive system schematic and drawing E02-1NR99. The display for the source range monitors, their trips, and their bypasses are located on the PPC. Source range signal conditioning equipment is designed so that it can also be used for open vessel experiments.

(3) Signal Conditioning

A current pulse preamplifier provides amplification and impedance matching for the signal conditioning electronics (Figure 7.7-15, SRM Block Diagram).

The signal conditioning equipment converts the current pulses to analog dc currents that correspond to the logarithm of the count rate (LCR). The equipment also derives the period. The output is displayed on front panel meters and is provided to remote indicators and recorders. The recorder displays the rate of occurrence of the input current pulses. In addition, the equipment contains integral test and calibration circuits, trip circuits, power supplies, and selector circuits.

(4) Trip Functions

The trip outputs of the SRM operate in the fail-safe mode. Loss of power to the SRM causes the associated outputs to become tripped.

The SRM provides signals indicating SRM upscale, downscale, inoperative, and incorrect detector position to the rod control and information system to block rod withdrawal under certain conditions. Any SRM channel can initiate a rod block. These rod blocking functions are discussed in Subsection 7.7.1.2.3.2.3.2, Rod Pattern Control System. Appropriate lights and annunciators are also actuated to indicate the existence of these conditions Table 7.7-2).

7.7.1.22.1.2 Bypasses and Interlocks

One SRM trip channel can be bypassed at any one time by the operation of a switch on the operator's control panel.

7.7.1.22.1.3 Redundancy and Diversity

SRM channels are not redundant because SRM detectors are spatially dependent and do not serve as a backup to other detectors.

7.7.1.22.1.4 Testability

Each SRM channel is tested and calibrated using procedures developed from the SRM instruction manual. Inspection and testing are performed as required on the SRM detector drive mechanism; the mechanism can be checked for full insertion and retraction capability. The various combinations of SRM trips can be introduced to ensure the operability of the rod blocking functions.

7.7.1.22.1.5 Environmental Considerations

The wiring, cables, and connectors located within the drywell are designed for continuous duty in the conditions described in Table 3.11-5. The SRM system components are designed to operate during and after certain design basis events such as earthquakes and anticipated operational occurrences.

7.7.1.22.1.6 Operational Considerations

The SRM system provides information to the operator and does not require any operation other than insertion of the SRM detectors into the core whenever these channels are needed, and withdrawal of the SRM detectors, when permitted, to prevent their burnup.

7.7.1.23 Main Control Room Annunciator

7.7.1.23.1 System Identification

The purpose of the annunciator is to attract the operator's attention to a plant variable that is out of the established operating limits. This is accomplished by the use of a lighted window and an audible alarm system. The window designates the system variable that is off normal. The operator's attention is thereby directed to a defined area. He may then investigate the cause of the off-normal condition and initiate corrective action.

Alarms are derived from plant equipment contacts which actuate when an abnormal condition develops. The actuated contact energizes the audible alarm device and illuminates the associated alarm window. The window message informs the operator of the plant area or the main control board area to which the operator's attention must be directed. The classification of alarms to be included are listed in the following paragraphs.

Isolation Alarms: These main control room alarms indicate conditions which will cause certain valve groups to close and isolate. The parameter causing the alarm is displayed on blue lighted windows.

Equipment Trip and Isolation Alarms: This is a combination of equipment trip alarms and isolation alarms. The equipment trip alarms apply to reactor, turbine, generator, motors, pumps, and devices which have ceased operating. Equipment trip alarms, including those associated with a plant trip or scram conditions, are displayed. The isolation alarms are described above. When a two color window is lit, red over blue, it will indicate the cause of the alarm and isolation. The window lens will be two colors, each color separated by a diagonal line running from the lower left corner to the upper right corner of the lens. Only one lamp will light both colors and one alarm will sound.

Trouble Alarms: These alarms indicate problems which should be investigated, and which require corrective action. In the case of a control loop malfunction, it may be operated on manual control until repair can be made. It should generally be possible to take corrective action and avoid a more serious trip. These are displayed on white lighted windows.

Pretrip and Isolation Alarms: These are a combination of pretrip alarms and isolation alarms. A pretrip alarm would very likely cause a plant trip if the cause for this alarm was not immediately investigated and action taken to rectify the impending trip. The isolation alarms are described above. When a two color window is lit, amber over blue, it will indicate the cause of the alarm and may effect isolation. The window lens will be two colors, each color separated by a diagonal line running from the lower left corner to the upper right corner of the lens. Only one lamp will light both colors, and one alarm will sound.

Group Alarms: These main control room alarms indicate malfunctions in a system which has its own detailed annunciator groups (e.g., radioactive waste system). These are displayed on white lighted windows.

7.7.1.23.2 Power Sources

The annunciator is powered from a 125 Vdc power supply. (Not Class 1E.) A non-class 1E 120 Vac source is also utilized to provide alarm for loss of DC power.

7.7.1.23.3 Classification

The annunciator is classified as a power generation system, and is not required for plant safety. Safety related system inputs to the annunciator are isolated using devices in the safety related system, that meet the definition of "Isolation Device" specified in IEEE 384.

7.7.1.23.4 Equipment Design

7.7.1.23.4.1 General

The annunciator is of the solid state type and utilizes plug in type cards, plugs, and receptacles. A self-standing vertical cabinet contains the solid state control logic for the annunciator unit. The window displays are flush mounted in the tops of main control room benchboards and panels. The control logic for each window is contained on a single printed circuit board (PCB) that plugs in to an edge connector. Normally each window will accommodate only one alarm contact. However, by using a special internal logic card, multiple inputs can be connected to a single window. Two bulbs are wired in parallel behind each window.

7.7.1.23.4.2 Components

The annunciator includes the following major components:

7.7.1.23.4.2.1 Flasher

The flasher unit is an internally mounted device causing the visual alarm signal to flash during the Alert condition.

7.7.1.23.4.2.2 Pushbuttons

(1) An alarm silence pushbutton is a momentary pushbutton common to all points on all panels. It is pressed to silence the alarm horn.

(2) An alarm acknowledge pushbutton is a momentary pushbutton common to points on the same board and is pressed to shift the annunciator from the alert to the acknowledge state, thereby causing the flasing alarm windows to illuminate steadily.

(3) An alarm reset pushbutton is a momentary pushbutton common to points on the same board, and is pressed to shift the annunciator lamp from the return-to-normal position, extinguishing the lamp.

(4) A test pushbutton is a momentary pushbutton common to annunciator points on the same board and is pressed to test lamps and circuitry in the alarm annunciator and horn.

7.7.1.23.4.2.3 Alarm Annunciator Window

This window provides a back-lighted, visual display of a single alarm function. The function may be a single-point or group repeat.

7.7.1.23.4.2.4 Audible Alarm

There are six horns in the system; four are dc horns of the same model and two are ac horns of the same model. The horns are grouped into sets with two dc horns and one ac horn in each set. Adjustments are provided on the horns so that the tone relationships can be varied, and made distinctly different from the other horns.

7.7.1.23.5 Operation

Operation of the annunciator is relevant to the following definitions. The annunciator logic sequence is specified in Table 7.7-3.

7.7.1.23.5.1 Definition of Annunciator States

(1) Normal is the alarm annunciator state when the remote contact is in the position indicating a normal plant condition.

(2) Alert is the alarm annunciator state immediately after the remote contact is actuated to a position indicating an abnormal plant condition.

(3) Acknowledge is the alarm annunciator state after an alert has been received and an alarm acknowledge pushbutton has been pressed.

(4) Return to Normal is the alarm annunciator state after the plant state has returned to normal.

7.7.1.24 Leak Detection System - Instrumentation and Controls

The non-safety-related portions of the Leak Detection System consists of the following subsystems:

(1) Recirculation Pump Leak Detection

(2) Safety/Relief Valves Leak Detection

(3) Reactor Vessel Head Leak Detection

(4) Drywell/Containment Leak Detection

(5) ECCS Leak Detection

7.7.1.24.1 General

This section discusses the instrumentation and controls associated with the non-safety-related leak detection system. The system itself is discussed in Section 5.2.5. The safety-related leak detection systems are found in Subsection 7.6.1.4.

The purpose of the leak detection system instrumentation and controls is to monitor leakage from the reactor coolant pressure boundary and initiate alarm.

No credit is taken in the safety analysis for operation of or operator reliance upon that instrumentation associated with the drywell sump leakage detection monitoring instrumentation. (Q&R 421.8)

7.7.1.24.2 Classification

This portion of the leak detection system is classified as not related to safety.

7.7.1.24.3 Reference Design

There is no reference design for this system.

7.7.1.24.4 Power Sources

The power sources for the non-essential systems are 120-Vac instrument buses or from NSPS power with LOCA power disconnect.

7.7.1.24.5 Recirculation Pump Leak Detection

7.7.1.24.5.1 Subsystem Identification

The purpose of the recirculation pump leak detection subsystem is to monitor the rate of coolant seepage or leakage past the pump shaft seals. Abnormal coolant flow past the seal will result in annunciator activation.

There are two leak detection systems, for each of the recirculation pumps. The recirculation pump leak detection system consists of two types of monitoring circuits, (Figure 7.7-16). The first of these monitors the pressure levels within the seal cavities, presenting the plant operator with a visual display of the sensed pressure in each of the two cavities. The second type of monitoring circuit utilized by the leak detection system monitors abnormal liquid flow from the seal cavities.

7.7.1.24.5.2 Pump Seal Cavity Pressure Monitoring

7.7.1.24.5.2.1 Equipment Design

The pressure levels within seal cavity No. 1 and seal cavity No. 2 are measured with identical instruments arranged similarly. Only one circuit, seal cavity No. 1 pressure monitoring, will be discussed. The pressure within seal cavity No. 1 is measured using a pressure transmitter. The pressure transmitter produces an output signal whose magnitude is proportional to the sensed pressure within its dynamic range. This output signal is then applied to the Performance Monitoring System for plant operator readout. Pump seal cavity pressure monitoring is a diverse method of detection to the seal cavity flow rate monitoring.

7.7.1.24.5.3 Liquid Flow Rate Monitoring

7.7.1.24.5.3.1 Equipment Design

All condensate flowing past the recirculation pump seal packings and into the seal cavities is collected and sent by one of two drain systems to the drywell equipment sump for disposal. The first drain system drains the major portion of the condensate collected within the No. 2 seal cavity. The condensate flow rate through the drain system is measured by a flow switch. The point at which the switch closes can be adjusted so that switch actuation occurs only below certain flow rates.

Excessively low flow rates through this drain system will activate an annunciator in the main control room.

The second drain system drains the cavity beyond the No. 2 seal cavity collecting the condensate that has seeped (or leaked) past the outer seal. The condensate flow rate through this drain system is also measured (high), using a flow switch. The physical construction of this switch is similar to the flow switch described above, with one contact set used to indicate the high flow rate. A high flow rate through this system will activate an annunciator in the main control room.

7.7.1.24.5.3.2 Operational Considerations

The main function served by the pressure and flow rate instrumentation is to provide indication and annunciation, respectively. There are no bypasses or interlocks associated with this subsystem. Back-up indication of seal leakage is provided, by monitoring both seal cavities to allow verification of seal failure. Excessive shaft seal leakage is collected by the drywell equipment sump. Seal cavity monitoring diversity is provided by monitoring leakage flow rate and seal cavity pressure.

7.7.1.24.6 ECCS Leak Detection

7.7.1.24.6.1 RHR Injection Lines Break Detection Monitoring

7.7.1.24.6.1.1 Circuit Description

A differential pressure transmitter senses the DP between the LPCS and RHR-A injection lines inboard of their respective isolation valves. The DP is normally approximately zero because each injection line is open to the pressure vessel. If the LPCS line breaks, a pressure transmitter will sense a high DP in one direction; if the RHR-A line breaks, it will sense a high DP in the opposite direction. Two alarm trip units are connected to the transmitter, one to actuate the LPCS Out-of-Service Alarm and LPCS Line Break Light and another to actuate the RHR-A Out-of-Service Alarm and RHR-A Line Break Status Light.

A differential pressure transmitter and two alarm trip units provide RHR-B/RHR-C Out-of-Service Alarms and Line Break Status Lights, as described above for LPCS/RHR-A.

7.7.1.24.6.2 LPCS and HPCS Leak Detection Monitoring

7.7.1.24.6.2.1 Circuit Description

The LPCS injection line break detection monitoring is described in subsection 7.7.1.24.6.1.1. The HPCS line break detection is similar except that the differential pressure transmitter senses the pressure difference between the HPCS and injection line inboard of the isolation valves and reactor pressure at the above-core-plate sensing line. Only one trip unit is used and will actuate the HPCS out-of-service alarm and HPCS line break status light.

7.7.1.24.6.2.2 Logic and Sequencing

Annunciator and status light actuation are the only action initiated by the injection line monitoring circuits.

7.7.1.24.6.3 ECCS Cubicle Floor Drain Sump Monitoring

7.7.1.24.6.3.1 Circuit Description

The ECCS and RCIC cubicle floor drain sumps are monitored for high influent flows by timers monitoring the pump cycling. The sump pump cycle timers are similar to those described in section 7.7.1.24.10.1.1 for the drywell floor drain sump.

7.7.1.24.6.3.2 Logic and Sequencing

Annunciator and status light actuation are the only action initiated by the injection line monitoring circuit.

7.7.1.24.6.3.3 Bypasses and Interlocks

There are no bypasses or interlocks associated with this subsystem.

7.7.1.24.6.3.4 Redundancy and Diversity

The main function served by this subsystem is to provide annunciation. There is no redundancy or diversity provided for this subsystem. It does not serve a safety function.

7.7.1.24.7 Main Steam Line Guard Pipe Monitor

7.7.1.24.7.1 Circuit Description

Each Main Steam Line guard pipe is monitored by the Leak Detection System. A temperature element is located near the end of the guard pipe near the drywell wall. A recorder in the main control room records the temperature and actuates an annunciator if the temperature exceeds a predetermined value.

7.7.1.24.7.2 Logic and Sequencing

Annunciator actuation is the only action initiated by the guard pipe monitor.

7.7.1.24.8 Safety/Relief Valve Leak Detection

Refer to Subsections 7.5.1.4 and 7.7.1.1.

7.7.1.24.9 Reactor Vessel Head Leak Detection

Refer to Subsection 7.7.1.1.

7.7.1.24.10 Drywell/Containment Leak Detection

7.7.1.24.10.1 Subsystem Identification

The primary detection methods for unidentified leaks within the drywell and containment include monitoring of:

(1) drywell floor drain sump flow rates,

(2) drywell cooler condensate flow rate increases,

(3) drywell cooler chilled water differential temperature increases,

(4) drywell airborne gaseous iodine and particulate radioactivity increases,

(5) increases in ambient temperature, and

(6) monitoring of containment floor drain sump fill and pump-out times.

The detection of identified leakage within the drywell and containment is accomplished by monitoring drywell and containment equipment drain sump fillup time and pumpout time, by flow indication, and flow alarms on drain lines to the drywell equipment drain sump from locations of potential leakage.

7.7.1.24.10.1.1 Drywell Sumps Monitor

(1) The normal design leakage collected in the floor drain sump includes unidentified leakage from the control rod drives, valve flange leakage, component service water, air cooler drains, and any other leakage not connected to the equipment drain sump. Collection in excess of background leakage would indicate an increase in reactor coolant leakage from an unidentified source.

a. Two Drywell Floor Drain Monitoring Systems capable of performing the same functions and operations are available. The purpose of having two systems performing the same function using diverse methods is to enhance overall system to reliability. Improved Tech Spec (ITS) Basis section B3.4.7 allows either of the systems to satisfy LCO 3.4.7.A. Both systems meet the same regulations and operating requirements. When both systems are operable, the output signals can be compared to determine system operating conditions.

b. One system (the sump pump discharge flow monitoring system) consists of a magnetic flow meter installed in the discharge piping of the Drywell floor drains sump pumps, and a flow totalizer converter installed in containment near the flow element. The flow totalizer converter provides local indication of total pump discharge flow and discharge flow rate. It also transmits a signal representing actual pump discharge flow rate to a Programmable Logic Controller (PLC) in the Main Control Room. The PLC calculates the average influent flow (averaged over the pump cycle) by integrating the signal from the flow totalizer converter and dividing the result by the total pump cycle time. A pump cycle is defined as "the time elapsed from the time the pump stops until the next time the pump stops." When the RF Drywell sump pit reaches a high level, one of the two pumps starts (the pumps alternate each cycle) pumping water to the drain sump collector tank. This operation will continue until the pit level reaches a low level setting. When the pump stops, the PLC senses a no flow signal, resets the internal timer, performs the average flow rate calculation, and transmits the resulting signal to a recorder, a computer point, and a totalizer (counter). This operation is repeated every time a sump pump completes its cycle.

1) The most recent calculated influent flow rate is continuously recorded by two recorder channels (one low range and one high range) in the main control room. If the flow rate has significantly decreased since the last calculated value, (and the current pump cycle is already longer than it was for the previous calculation) the

display will slowly decrease based on what the leakage rate would be if the pump cycle were to end at the moment the display shows. This regression calculation feature is intended to improve the system response time for significantly decreased flow rates.

2) The PLC also feeds two main control room annunciators. One activates upon an excessive calculated influent flow rate, and the other upon a significant indicated influent flow rate increase.

3) The PLC also feeds a plant computer generated alarm for system inoperable (PLC diagnostic fault).

4) The calculated influent flow rate signal provides an analog input to the plant computer.

5) The calculated influent flow rate is integrated by a totalizer instrument to give total sump influent volume. The integrated flow is displayed on a resetable counter in the main control room.

c. The second flow monitoring system consists of a bubbler-type level sensing system installed in the Drywell floor drain sump pit. The bubbler level sensor provides a signal to a differential pressure transmitter located in the containment building. The transmitter provides a signal representing sump pit level to a PLC located in the main control room. The PLC calculates the total inleakage flow rate by determining the rate of sump level change every minute and alternates pump operation.

1) The calculated influent flow rate is continuously recorded by two recorder channels (one low range and one high range) in the main control room. When the sump pumps are started, the calculated influent flow rate clamps at the last valid calculation until 30 seconds after the pumps stop, at which time it begins updating the indication normally again.

2) The PLC feeds two main control room annunicators. One activates upon an excessive calculated influent flow rate, and the other upon a significant indicated influent flow rate increase.

3) The PLC also feeds a plant computer generated alarm for system inoperable (PLC diagnostic fault, or level signal out of range).

4) The calculated influent flow rate signal provides an analog input to the plant computer.

5) The calculated influent flow rate is integrated by a totalizer instrument to give a total sump influent volume. The integrated flow is displayed on a resettable counter in the main control room.

d. Each of the sumps contain additional instrumentation to monitor sump performance. At intervals, the liquid collected in the sump will be pumped to the drain sump collector tank for processing. If these pumping cycles

become too lengthy or too frequent, it is indicative of a higher than normal influent flow rate to the sump due to high leakage rates. Pumping cycles that are too lengthy or too frequent are alarmed in the main control room using two timers which are operated by the sump pump controls. One will alarm if the pump-out time is too long, the other if the sump fill-up time is too short.

Pumping is initiated when a level switch senses a high liquid level within the floor drain sump. One of the pump starts at this time and the sump pump out timer starts the timing interval. If the pump is still running at the end of the timed interval, the timer activates an annunciator. If the liquid level in the sump decreases to the actuation point of the level switch before the timer has completed its cycle, the annunciator will not sound. The level switch initiates the pump stop signal and the timer automatically resets without energizing the annunciator circuit.

When the sump pump motor stops, the sump fill timer is energized. If the pump motor has not started at the end of the timer setpoint, the timer deenergizes and is automatically reset. If, however, the pump start is initiated before the timer has completed its cycle, an alarm is initiated in the main control room. The sump fill timer is reset by pressing the RESET push-button switch located on the leak detection panel in the main control room.

A level detecting device (different from the one used for pump control) in the sump will actuate an annunciator in the main control room if the sump level is high-high.

(2) The equipment drain sump collects only identified leakage. This sump receives piped drainage from pump seal leakoff, reactor vessel head seal drain, bellows seal, and valve stem packing leakoff. Collection in excess of background leakage would indicate an increase in reactor coolant leakage from an identified source.

The sump pump cycle monitors, and level alarm are the same as described for the floor drain sump. Equipment drain sump in-leakage rate is also monitored by sensing pump discharge flow. Using the same principle as with the floor drain sump, the flow signal is integrated over the total pump cycle time to determine the in-leakage rate. The rate is recorded in the Main Control Room.

7.7.1.24.10.1.2 Containment Sump Monitor

Sump pump cycle timers and level alarms, similar to those described for the drywell floor drain sump, are provided to monitor sump performance with respect to equipment operation and leakage into the sump. Background level leakage was determined during preoperational tests. Identified leakage within the containment outside the drywell includes transfer pool liner and separator liner leakage, which is piped to the containment floor drain sump.

7.7.1.24.10.1.3 Sump Discharges Flow Totalizers

In-line flow totalizers for the discharge of the containment and drywell floor drain sump pumps to the Auxiliary Building floor drain tank and for the discharge of the containment and drywell equipment drain sumps to the Fuel Building equipment drain tank are provided to indicate the

total amount of liquid pumped out of the sumps. The totalizers are turbine type flow meters with a mechanical register.

7.7.1.24.10.1.4 Drywell Fission Product Monitoring

The Drywell Air Sampling System detects unidentified leaks in the drywell. The system continuously monitors the drywell atmosphere for airborne radioactivity (iodine, noble gases, and particulates). The sample is drawn from the drywell. A sudden increase of activity above background which may be attributed to steam or reactor water leakage, is annunciated in the main control room.

7.7.1.24.10.1.5 Drywell Air Cooler Monitors

The drywell air coolers are monitored to detect unidentified leaks in the drywell.

(1) There are eight drywell coolers, six upper (two original and four supplemental) and two lower. The upper coolers are designed to remove latent heat preferentially. This will give increased condensed moisture flow from them with increasing latent heat load. The condensed moisture is sensed by a turbine meter type flow transmitter located in the upper coolers drain line header and demonstrated on an indicating switch in the main control room. If the flow exceeds a predetermined value, the switch will actuate an annunciator on the main control board.

(2) In order to maintain drywell design temperature with the drywell atmosphere coolers operating inside the sealed drywell, the cooling water inlet and outlet temperature difference is maintained within a specified limit. Any increase of the cooling water differential temperature for the original upper two coolers will indicate the leakage inside the drywell. Differential temperature is indicated in the main control room. An annunciator in the main control room is actuated when the differential temperature exceeds a predetermined limit.

7.7.1.24.10.1.6 Fuel Pool Liner and Refueling Bellows Leak Detection

The Containment Building transfer pool liner, fuel pool liner, steam dryer storage pool, reactor vessel pool, steam separator storage pool-liners, and the refueling bellows seal are monitored for leaks. The leak detection system consists of turbine type transmitters. One is located in the transfer and steam dryer storage pool liner drain. One is in the separator storage and reactor pool liner drain. And one is in each of the two refueling bellows test and monitoring lines. The transmitter produces a signal proportional to the leakage flow in the drain line. The leakage rate is displayed in the main control room and an alarm is activated when leakage reaches a predetermined value.

7.7.1.24.10.1.7 Valve Stem Packing Leaking Detection

Valve stem packing leaks from some power-operated valves in the drywell on systems connected to the Reactor Coolant Pressure Boundary are monitored by temperature elements in the leak-off drain lines. Refer to the system P&IDs which detail the specific valves equipped with stem packing leakoff lines and associated temperature monitoring instrumentation. The drain lines are connected to the leak-off connection between a double set of packings. Should the first packing leak, a multipoint recorder monitoring the temperature element will actuate an

annunciator in the main control room. A solenoid valve in the leakoff line downstream of the temperature element can then be manually closed from the main control room stopping further leakage.

7.7.1.24.10.1.8 Drywell Ambient Temperature Monitoring

The drywell ambient is monitored by four temperature elements. The temperature is recorded in the main control room and an annunciator is actuated if temperature exceeds a predetermined value.

7.7.1.24.10.2 Operational Considerations

No logic or sequencing functions are performed by the drywell and containment leak detection monitors. The monitors provide main control room annunciation. The drywell floor drain sump, air cooler condensate monitors, and fission product monitors are diverse means of detecting unidentified leakage within the drywell.

7.7.1.25 Anticipated Transient Without Scram

7.7.1.25.1 Alternate Rod Insertion

To prevent the potential consequences of a postulated anticipated transient without scram (ATWS) event, a non-safety related alternate rod insertion (ARI) subsystem is provided as part of the ATWS system. This subsystem functions independently of the reactor protection (trip) system (RPS) by providing an alternate means of venting the scram air headers by opening the redundant scram valves. The ARI function is initiated by either RPV high pressure or RPV low level. The ATWS system includes two ARI subsystems identified in the design as systems 1 and 2. Trip inputs A and E are assigned to system 1 and trip inputs B and F to system 2. A two-out-of-two logic system for the diverse trip signal is used. The trip logic for each system is initiated by either RPV high pressure or RPV low water level. Similar logic is used for the ATWS recirculation pump trip (RPT) described in Subsection 7.7.1.25.2.

The ARI trip logic for each system is designed to perform the following three functions: (1) activate two scram pilot air header solenoid operated vent valves (one per header) to exhaust the air from the pilot scram air header; (2) activate one three-way solenoid operated valve to block the instrument air supply line to the pilot scram valves and exhaust air from the pilot scram air header; and (3) activate two solenoid operated valves that exhaust air from the air header to the scram discharge volume vent and drain valves, permitting these valves to close. Each solenoid valve is furnished with two 125 Vdc solenoid coils and both coils must be energized to open the valve. In the case of the three-way solenoid operated valve, both coils must be energized to block instrument air and vent the scram pilot air header to atmosphere.

The ARI function for each system is capable of being manually initiated from the main control room by pushbutton switches located on panel 1H13-P680-09C. Both pushbutton switches for either system must be armed by rotating the collar and depressing before the manual ARI function will be initiated for that system. Indicating lights on this panel inform the operator of the system status, and indicating lights on panel 1H13-P678, which are activated by solenoid valve limit switches, provide all solenoid valve open and close position indications.

The automatic and manual actuation signals to the ARI solenoid valves seal-in for a minimum of two minutes to assure that all control rods have time to fully insert. Manual SCRAM reset is

therefore prohibited for two minutes after initiation. The scram pilot air header vent valves and the scram air supply block valves automatically reset provided the initiating trip signal has returned to normal. The scram discharge volume vent and drain valve solenoid valves are manually reset provided the initiating trip signal has returned to normal and the two-minute seal-in has timed out. A reset pushbutton is provided in the main control room on panel 1H13-P680-09C and an indicating light which informs the operator (light on) when manual reset is allowed (manual reset is inhibited while the seal-in is activated.).

The logic circuitry for each ATWS system is housed in a vertical panel (1RR04JA for system 1 and 1RR04JB for system 2) located in the TMI/isolator panel room, elevation 800'-0" in the control building.

Provisions for testing the system control logic and valve solenoid coil continuity is provided at these panels. A test switch located at panel 1RR04JA for system 1 (1RR04JB for system 2) activates relay logic which inhibits the solenoid valve coils and the RPT activating relay from being energized. During testing, a signal is injected into the trip units for either two reactor pressure signals or two reactor level signals to simulate a trip condition. Relay contacts that energize the solenoid valves and the RPT activating relay are checked and then returned to normal. Indicating lights at both panels 1RR04JA (1RR04JB for system 2) and 1H13-P680-09C indicate that the ARI/RPT system is in test. Returning the system from the test mode to normal function requires reset of both the test switch and a test circuit seal-in switch located at the same panel. This two-step process is provided since otherwise resetting the test switch to normal during a test would scram the reactor.

Four locally mounted (inside primary containment), non-safety related, non-indicating pressure transmitters measure reactor pressure for the ARI and ATWS/RPT function at four (reactor vessel quadrant) physically separated locations, similar to those used for RPS. These transmitters sense pressure from the same sensing lines described for RPS in Subsection 7.2.1.1.4.2(2). Cables from these transmitters are routed to the ATWS panels. Each pressure transmitter provides a signal to a trip module in its instrument channel (two channels per ATWS system). High reactor pressure initiates a trip signal in that channel. Both pressure trip inputs in either system must be initiated to cause ARI and ATWS/RPT. The piping arrangement of the ARI/RPT reactor vessel pressure sensors is shown in Figure 3.6-1, Sheet 55 and 56.

Four locally mounted (inside primary containment), non-safety related, non-indicating level (differential pressure) transmitters measure reactor level for the ARI and ATWS/RPT function at four (reactor vessel quadrant) physically separated locations, similar to those used for RPS. These transmitters sense pressure from the same sensing lines described for RPS in Subsection 7.2.1.1.4.2(3). Cables from these transmitters are routed to the ATWS panels. Each level transmitter provides a signal to a trip module in its instrument channel (two channels per ATWS system). Low reactor water level initiates a trip signal in that channel. Both level trip inputs in either system must be initiated to cause ARI and ATWS/RPT. The piping arrangement of the ARI/RPT reactor vessel level sensors is shown in Figure 3.6-1, Sheet 55 and 56.

7.7.1.25.2 Recirculation Pump Trip

To mitigate the potential consequences of a postulated anticipated transient without scram (ATWS) event a non-safety related recirculation pump trip (RPT) subsystem is provided as part of the ATWS system. This subsystem functions independent of the nuclear safety-related RPT system discussed in Subsection 7.6.1.8 by providing an alternate means of tripping the recirculation pump motors and the low frequency motor/generator (LFMG) sets. The

ATWS/RPT function is initiated by either RPV high pressure or RPV low level. The ATWS system includes two RPT subsystems identified in the design as systems 1 and 2. Each system trips only one associated recirculation pump. Trip inputs A and E are assigned to system 1 and trip inputs B and F to system 2. A two-out-of-two logic system for the diverse trip signal is used. The trip logic for each system is initiated by either RPV high pressure or RPV low water level. Similar logic is used for the alternate rod insertion (ARI) system described in Subsection 7.7.1.25.1.

The trip logic described in Subsection 7.7.1.25.1 for the ARI function applies to RPT except once the trip logic is initiated there is no seal-in of the RPT logic. The trip logic activates the trip coils in the recirculation pump and the LFMG set motor circuit breakers. Once the trip logic is automatically initiated, the circuit breakers are manually reset through the normal breaker controls. Manual initiation of the ARI function as described in Subsection 7.7.1.25.1 will not activate the ATWS/RPT function. Testing of the ATWS/RPT function is also described in Subsection 7.7.1.25.1.

7.7.1.26 Safety Parameter Display System (SPDS)

7.7.1.26.1 System Identification

7.7.1.26.1.1 General

The purpose of the SPDS is to assist control room personnel in evaluating the safety status of the plant. Through the use of four Critical Safety Functions (CSFs), the SPDS provides a continuous indication of plant parameters or derived variables representative of the safety status of the plant.

The Clinton SPDS is part of the plant process computer system and in the Main Control Room. The Number 5 monitor in the plant console (NUCLENET) is designated as the SPDS Display terminal.

The Clinton SPDS sensor signals are eletrically isolated from all safety-related systems. Therefore, with the exception of the isolators, the SPDS does not require Class 1E power sources or equipment qualification. Also, the SPDS need not meet single failure criteria or seismic category I requirements.

The Safety Parameter Display System (SPDS) display is a part of the PMS/DCS Systems. The CPS SPDS provides a concise display of critical plant variables [categorized according to Critical Safety Functions (CSFs)] to the Main Control Room (MCR) operators to aid them in rapidly and reliably assessing the safety status of the plant. The variables monitored by the CPS SPDS provide information symptomatic of normal, abnormal and emergency conditions consistent with Chapter 15 and the Emergency Operating Procedures (EOPs). The SPDS displays provide the reactor plant parameters, and present the data which facilitates EOP entry conditions.

7.7.1.26.1.2 Classification

This system is a power generation system and is classified as a system not related to safety.

7.7.1.26.2 Power Sources

The power for the performance monitoring system is supplied from a reliable AC source which include a UPS with a four hour battery back-up.

7.7.1.26.3 Equipment Design Approach

7.7.1.26.3.1 SPDS Critical Safety Functions (CSF) and their associated EOPs are:

CSF	Title
RPV	EOP-1 RPV Level Control
PRI-CNMT	EOP-6 Primary Containment Control
SEC-CNMT	EOP-8 Secondary Containment Control
RAD RLSE	EOP-9 Radioactivity Radiation Release Control

The alarming parameters (algorithms), for each Critical Safety Function and the specific inputs points are identified in the I/O data base for the process computers containing the SPDS parameters and definition for each input.

7.7.1.26.3.2 Displays

The SPDS displays are available on the number 5 monitor in the NUCLENET which is dedicated for this purpose. Selection of the SPDS displays can also be made on all other system monitors as desired.

A top level display and five secondary supporting displays were developed for the system:

- SPDS SUMMARY DISPLAY
- SPDS RPV, PRI-CNMT, AND HYDROGEN
- SPDS RAD RELEASE (EOP-9) AND SEC-CNMT (EOP-8)
- SPDS RPV CONTROL ALGORITHM TREE
- SPDS PRIMARY CONTAINMENT CONTROL ALGORITHM
- SPDS RAD RELEASE/SEC CNMT ALGORITHM TREES

In addition to the displays available in the Main Control Room described above, the SPDS displays are available in the CPS Technical Support Center (TSC). Plant parameters are available in the Emergency Operations Facility (EOF) using an equivalent program.

7.7.1.26.3.3 Response Time

The System response time from plant process variable change to displaying the parameter on the monitor display is heavily dependent on the instrument and instrument loop response time. Because the SPDS displays utilizes existing instrumentation loops, the following design parameters can be specified:

Display Update Rate

The SPDS displays shall be updated at a period no greater than two seconds.

Data Update Rate

The DCS parameters shall be scanned and updated, if a significant change has occured, at a period no greater than one second. Calculated and transformed variables shall similarly be updated at a period no greater than five seconds.

7.7.1.26.3.4 Safety Classification

The Clinton SPDS is not required to satisfy single failure criteria, Class 1E qualification requirements of seismic Category I requirements. In order to protect safety-related systems from potential SPDS faults, the SPDS is electrically isolated from these systems.

7.7.1.26.3.5 Reliability and Availability

The SPDS is capable of being displayed during all operating modes of the plant. The information available from the SPDS, as well as other sources, is used in the operating procedures by Control Room personnel during all classes of emergencies as well as during normal operations.

The SPDS displays are available on the dedicated number 5 monitor in the NUCLENET. The Critical Safety Functions alarms on all active DCS monitors. A visual and audible alarm (with reflash) is provided to alert personnel of unsafe operating conditions.

7.7.1.26.3.6 SPDS Hardware

The operating system is a real time operating system with the following functions as a minimum:

- Program Development Capability
- Data Base Management System
- File Management System
- File Inquiry System
- Utility Programs
- Communications Programs
- Display Systems

a) Security

The SPDS has a security system to control access. The control room operators have unrestricted access to the SPDS displays. Administrative controls have been established to prevent unauthorized database changes and display edit functions.

b) Performance Monitoring System (PMS)

The PMS is a General Electric Company supplied computer system. The PMS is configured as separate NSSS and BOP computer based subsystems. Each subsystem has dedicated process I/O peripherals, and data storage devices.

c) Display Control System (DCS)

The DCS is also a General Electric Company supplied computer system. The primary purpose for DCS is to provide operating plant information through the NUCLENET Control Console. DCS enables the plant operator to select diagrammatic displays that present the current status of power plant systems as they pertain to the plant operating mode.

d) Keyboards

Three keyboards have been provided in addition to those contained in the CPS NUCLENET and in the computer room area. Two keyboards are located in the TSC. These operator keyboards are similar to those supplied with the NUCLENET with which the SPDS displays can be accessed.

e) Video Monitors

Two video monitors have been provided in addition to those contained in the CPS NUCLENET and in the computer room area. These monitors are located in the TSC and are similar to those supplied with the NUCLENET. Their function is to provide SPDS/DCS Displays at their respective locations.

f) Video Switches

Video switching modules are provided to the NUCLENET to provide data to the keyboards and monitors located in the TSC.

g) Fiber Optic Video/Data Communications Link

A modular fiber optic communications link is provided to accomplish communication between the main control room (MCR) and the TSC.

h) Coaxial Cable

Coaxial cable is used to provide communication between the TSC keyboards and monitors and the NUCLENET. Coaxial cable is also used to transmit data from the NUCLENET to the fiber optic video/data communications link.

i) Electrical Isolation Devices

All SPDS process input signals, which are safety related, are connected to the DCS process interface using isolation devices. All SPDS Nuclear Steam Supply System (NSSS) and Balance of Plant (BOP) process input signals, which are safety-related, are connected to the PMS process interface using isolation devices.

These isolation devices are intended to protect safety-related systems from faults in the SPDS. Each device used to accomplish isolation meets the design criteria of Regulatory Guide 1.97, Environmental Qualification requirements of 10CFR50.49, and the Seismic Qualification requirements of IEEE 344 (1975).

j) Display Selection

The Display Control System display selection is done by DCS SW407 located directly in front of the SPDS number 5 monitor. Six spare positions on that switch have been allocated for SPDS format selection and acknowledgment.

7.7.1.26.4 Testability

The PMS/DCS/SPDS has self-checking provisions. It performs diagnostic checks to determine the operability of certain portions of the system hardware and performs internal programming checks to verify that input signals and selected program computations.

7.7.1.26.5 Environmental Considerations

The Clinton SPDS is not required to satisfy single failure criteria, Class 1E qualification requirements of seismic Category I requirements. The SPDS is located in the Main Control Room (MCR) which is a mild environment area.

7.7.1.27 Buffer System

7.7.1.27.1 System Identification

7.7.1.27.1.1 General

The Buffer System (BS) is a computer system which receives plant data from plant computers, stores plant data, and makes plant data available to personnel and applications under controlled conditions.

BS 'buffers' plant computers so they are protected from general access, and provides automatic long term storage of collected data so trending may be performed with minimal prior setup. BS also generates special data collection files for particular systems, and initiates and controls data transmissions to the Illinois Department of Nuclear Safety (IDNS) and to the NRC Emergency Response Data System (ERDS).

7.7.1.27.1.2 Classification

BS is a data collection system, and is not required for plant operation or shutdown. Appendix J, NUREG 1394 specifically states that there is no requirement for ERDS supporting equipment to be safety grade, to have redundancy, or be an LCO or Tech Spec item. Consequently, BS is considered a non-safety, non-EQ/SQ, and non-Tech Spec system.

7.7.1.27.1.3 Reference Design

There is no reference design for this system.

7.7.1.27.2 Power Source

BS is powered by nominal 115 VAC line current. Per Docket No. 50-461 (3/26/92), the NRC states the expectation that "appropriate guaranteed power" is provided to the computer used to transmit data to ERDS. For this reason BS is supplied with a back-up power source.

7.7.1.27.3 Equipment Design

7.7.1.27.3.1 General

BS fulfills in part the requirements of the "Illinois Safety Preparedness Act", Public Act 83-1342 (House Bill No. 3098) of the 83d General Assembly, and of NUREG 1394 Rev. 1, "Emergency Response Data System (ERDS) Implementation".

BS provides a means for computers on the Site LAN to access plant data in its database, while preventing site computers from interfacing with plant systems. BS also sends data to IDNS and to ERDS. BS does not allow any commands or inquiries to penetrate to plant systems.

7.7.1.27.3.2 Receipt of Data

BS is designed to receive data from multiple plant systems at rates appropriate for the originating system, desired degree of resolution, and expected rate of data change.

7.7.1.27.3.3 Storage of Data

Data are automatically stored when values change. The required delta for each point is individually administratively controlled.

7.7.1.27.3.4 Access to Data

Data in BS may be accessed by a software client, by file transfer protocol (ftp), or by direct BS transmission. The software will be a secure method of trending data points with a graphical interface, and capable of generating data files which are compatible with spreadsheet programs.

BS allows access for selected applications. These applications can either automatically access, automatically transmitted to, or granted access to a pre-determined and isolated directory in BS for customized files in the required format.

BS periodically sends transmissions to IDNS and to the NRC to fulfill regulatory requirements. The IDNS transmissions are fully automatic, with frequency administratively controlled. The NRC ERDS transmissions are manually initiated and terminated.

7.7.1.27.3.5 Testability

All system components can be tested and inspected as required. Data receipt and transmission may be monitored during system operation.

7.7.1.27.4 Environmental Considerations

BS is not required for safety purposes, and is not required to operate after a design basis accident nor in any setting other than an office environment.

7.7.1.27.5 Operational Considerations

7.7.1.27.5.1 General Information

Operation is automatic, with manual intervention to initiate the ERDS transmission. Once manually initiated, transmissions to ERDS continue until manually suspended.

Periodic purging of data from the database, and other operating system activities, may be required. These are considered administrative functions.

7.7.1.27.5.2 Reactor Operator Information

There are no indicators or alarms provided to keep MCR operators informed of the status of the system. Protected administrative logins allow monitoring system operation at will.

7.7.1.27.5.3 Setpoints

BS has no safety set points.

7.7.2 Analysis

The purpose of this subsection is to:

(1) demonstrate by direction of referenced analysis that the subject described systems are not required for any plant safety function, and

(2) to demonstrate by direct or referenced analysis that the plant protection systems described elsewhere are capable of coping with all failure modes of the subject control systems.

In response to item (1) above, the following is cited: Upon considering the design basis, descriptions, and evaluations presented here and elsewhere throughout the document relative to the subject system, it can be concluded that these systems do not perform any safety function.

The individual system analysis in this section concludes that the subject systems are not required for any plant safety action.

For consideration of item (2), it is necessary to refer to the safety evaluations in Chapter 15 and Appendix 15A.

In that chapter, it is first shown that the subject systems are not utilized to provide any design basis accident safety function. Safety functions, where required, are provided by other qualified systems. For expected or abnormal transient incidents following the single operation error (SOE) or single component failure (SCF) criteria, protective functions are also shown to be provided by other systems.

Next, further considerations of situations beyond the SOE and SCF, specified as single active component failure (SACF), are analyzed in Chapter 15 and Appendix 15A. Although these are not design basis requirements, the ability of the plant to provide at least one single protective function, even under these stringent assumptions, is demonstrated.

7.7.2.1 Reactor Vessel - Instrumentation

7.7.2.1.1 General Functional Requirements Conformance

The reactor vessel-instrumentation is designed to provide redundant or augmented information to the existing information required from the engineered safeguards and safety systems. The operator utilizes this information to start up, operate at power, shut down, and service the

reactor system in an efficient manner. None of this instrumentation is required to initiate or control any engineered safeguard or safety system.

7.7.2.1.2 Specific Regulatory Requirements Conformance

There are no specific regulatory requirements imposed on this reactor vessel instrumentation but the following general considerations are offered:

(1) Conformance with 10CFR50, Appendix A, GDC 13, Instrumentation and Control

The reactor vessel information provides the operator with information on the reactor vessel operating variables during normal plant operation and anticipated operational occurrences so that the need to use the safety systems, although ready and able to respond, is minimized. This instrumentation does not serve in any direct controlling functions. Controls that maintain the reactor vessel operating variables within prescribed operating ranges are performed by the:

a. feedwater system

b. RCIC system

c. rod control and information system (RCIS)

d. main steam pressure regulating system

e. main turbine steam bypass control system

(2) Conformance with 10CFR50, Appendix A, GDC 24, seperation of protection and control systems.

This instrumentation is not part of or related to any safety system. The circuitry of the safety systems is completely independent of this instrumentation such that failures of this instrumentation will not cause or prevent any action to be initiated by the safety systems.

(3) Conformance to IEEE STD 279, Section 4.7, Control and Protection System Interaction

This instrumentation is separate from and independent of the safety systems circuitry. There is no direct circuit-to-circuit or functional interactions between this instrumentation and the safety systems. No single failure in this instrumentation can prevent the safety systems from meeting the minimum performance requirements specified in the design basis of that system.

7.7.2.2 Rod Control and Information System (RCIS) - Instrumentation and Controls

7.7.2.2.1 General Functional Requirements Conformance

The circuitry described for RCIS is completely independent of the circuitry controlling the scram valves. This separation of the scram and normal rod control functions prevents failures in the rod control and information circuitry from affecting the scram circuitry. The scram circuitry is discussed in Section 7.2. Because each control rod is controlled as an individual unit, a failure

that results in energizing of any of the insert or withdraw solenoid valves can affect only one control rod. The effectiveness of a reactor scram is not impaired by the malfunctioning of any one control rod. It can be concluded that no single failure in RCIS can result in the prevention of a reactor scram, and that repair, adjustment, or maintenance of RCIS components does not affect the scram circuitry.

Chapter 15 and Appendix 15A examine the various failure mode considerations for this system. The expected and abnormal transients and accident events analyzed, envelope the failure modes associated with this system's components. These include:

(1) control rod withdrawal errors

(2) control rod drop accident

To be specific, the following is cited:

(1) The RCIS is not required for plant safety functions. The system has no function associated with any design basis accident.

(2) This system is not used for plant shutdown resulting from an accident or nonstandard operational conditions.

(3) The function of the RCIS is to control core reactivity and thus power level. Interlocks from many different sources are incorporated to prevent the spurious operation of drives or undesirable rod patterns throughout all ranges of operation.

(4) This system contains no components, circuits or instruments required for reactor trip or scram. There are no operator manual controls which can prevent scram.

(5) The consequence of improper operator action or the failure of rod block interlocks results in a reactor scram.

7.7.2.2.2 Specific Regulatory Requirements

No specific requirements are imposed on this system, but the following general considerations are offered:

(1) 10CFR50 Appendix A Criterion 24, Separation of Protection and Control Systems

No part of the RCIS is required for scram. The rod block functions provided by the NMS are the only instances where the RCIS uses any instruments or devices related to RPS functions. The rod block signals received from the NMS prevent improper rod motion before limits causing reactor scram are reached. Common APRM, IRM, and SRM detectors are used, but electrically separate trip units provide signals for the RCIS and RPS. See Subsections 7.6.1.5 and 7.6.2.5 for a description of this interface. In addition to separate trip units for the RPS and RCIS, the inputs to the RCIS are isolated from the logic via optical isolators. Single failure of a control component therefore will not degrade the protection system.

(2) 10CFR50 Appendix A Criterion 26, Reactivity Control System Redundancy and Capability

The RCIS, in combination with the control rods and Control Rod Drive System, is one of the two independent reactivity control systems required by this criterion.

7.7.2.2.3 Rod Block Trip-Instrumentation and Controls

7.7.2.2.3.1 General Functional Requirement Conformance

The rod withdrawal block functions prevents an operator from carrying out actions which, if unchecked, might result in a protective system action (scram). A fixed margin separates the rod withdrawal block setpoints and the scram setpoints in IRM and APRM. There are no safety considerations.

7.7.2.2.3.2 Specific Regulatory Requirement Conformance

No specific regulatory requirements apply. The circuits are designed to be normally energized (fail-safe on loss of power) and single failure tolerant. The equipment is designed to prevent the rod block trip circuitry from affecting the protection system trips in the IRM and APRM channels through use of separate trip circuits and relays. IEEE Standards do not apply because rod block trips are not required for any postulated design basis accident or for safe shutdown.

7.7.2.3 Recirculation Flow Control System - Instrumentation and Controls

7.7.2.3.1 General Functional Requirements Conformance

The controls and interlocks are not required nor designed to comply with the single failure criterion. However, a degree of redundancy is provided for the more important operational and equipment protective functions. System single failures or single operator errors are evaluated in the transient analysis in Chapter 15, "Accident Analysis." It is shown that no malfunction in the recirculation flow control system or LFMG system can cause a transient sufficient to cause significant damage to the fuel barrier or exceed the nuclear system pressure limits.

There are no direct connections to safety-related systems and no interaction except through an isolated RPT input to LFMG set controls, and isolated controls and interlocks of RPT circuit breakers. These are discussed in Section 7.7.2.3.2.

The main recirculation process control system is not required to be designed to meet the single failure criterion. Control system failures resulting in complete loss of control signal will result in electrical "locking" of the flow control valve actuator in its last demanded position at the instant of signal loss.

Recirculation flow control system failures (e.g., transistors, resistors, etc.) that cause upscale control signals will initiate a motion inhibit alarm and lock the flow control valve in its last demanded position. In the case of such failures, the reactor is protected by a high pressure or high flux scram. See drawing E02-1RR99. Such faults have been analyzed in Chapter 15.

Recirculation system flow control failures causing downscale signal failures may cause one recirculation flow control valve to close. Control component failures, such as the flow controller,

function generator, and flow controller limiter result in a single flow control valve closure at 11% per second. Valve velocity is limited to not more than 11% per second with electronic limiters.

The recirculation pump isolation valves are remote manually operated MOVs. Each valve is electrically independent of the other valves with a control switch and open/close indication in the main control room.

Chapter 15 and Appendix 15A examine the various failure mode considerations for this system. The expected and abnormal transients and accident events analyzed, envelope the failure modes associated with this system's components. These include:

(1) Recirculation flow controller failures

(2) Recirculation pump seizure and pump shaft failures

7.7.2.3.2 Specific Regulatory Requirements

The control and safety system interfaces are designed in compliance with the following general design criteria (GDC) of Appendix A to 10CFR50, IEEE 279, Section 4.7, and Regulatory Guides.

(1) 10CFR50.34 For Contents of Applications

See Section 7.1 for compliance.

(2) GDC 13 For Instrumentation and Control

Conformance to this requirement is shown in the process instrument diagram figure (P&ID). The recirculation system is capable of monitoring and controlling all the important processes and control variables over their anticipated range for normal operation and for anticipated operational occurrences.

(3) GDC 15 For Reactor Coolant System Design

The recirculation flow control system functions so that no anticipated or abnormal operational transient resulting from a malfunction in the recirculation flow control system can result in significant fuel damage or exceeding nuclear system pressure limits.

(4) IEEE 279, Section 4.7 For Control and Protection System Interface, GDC 24 For Separation of Protection and Control Systems, and Regulatory Guide 1.75 for physical independence of electrical systems.

a. Deleted

b. RPT signal initiates LFMG set start. The RPT signal is isolated in the RPS system to assure that a failure in the LFMG set control circuits will not prevent RPT from performing its safety function.

c. The RPT system uses the recirculation pump motor breakers in the performance of its safety function. The RPT function trips a separate trip coil from the control trip coil. All of the nonessential controls for the RPT

breakers are isolated in the recirculation system to assure that a failure in the control, interlock, and indication circuits will not prevent RPT from performing its safety function.

(5) R.G. 1.70 For Standard Format and Content of SAR

See Subsection 7.1.2.6.17 for degree of conformance.

(6) R.G. 1.75 Physical Independence of Electric Systems.

See Section 7.1.2.6.19 for degree of conformance.

7.7.2.4 Feedwater Control System - Instrumentation and Controls

7.7.2.4.1 General Functional Requirements Conformance

The feedwater control system is a power generation system for purposes of maintaining proper vessel water level. Interlocks are provided to lock the flow changing capabilities in the "as-is" condition in the event of control signal failure. Should the vessel level rise too high, the feedwater pumps and plant main turbine would be tripped. This is an equipment protective action which would result in reactor shutdown by the RPS system as outlined in Section 7.2. Lowering of the vessel level would also result in action of the RPS to shutdown the reactor.

Chapter 15 and Appendix 15A examine the various failure mode considerations for this system relative to plant safety and operational effects. The expected and abnormal transients and accident events analyzed in the appendix, envelope the failure modes associated with this system's components. These include:

(1) Loss of all feedwater flow (pumps)

(2) Loss of feedwater heater

(3) Malfunction of feedwater controller

(4) Failure of feedwater line

7.7.2.4.2 Specific Regulatory Requirements Conformance

The feedwater system is not a safety-related system and is not required for safe shutdown of the plant, nor is it required during or after accident conditions.

There are no interconnections with safety-related systems and no specific regulatory requirements are imposed on the system.

7.7.2.5 Pressure Regulator and Turbine-Generator System - Instrumentation and Controls

7.7.2.5.1 General Functional Requirements Conformance

Turbine speed and acceleration control is provided by the initial pressure regulator which controls steam throttle valve position to maintain constant reactor pressure. The turbine speed governor overrides the pressure regulator on increase of system frequency or loss of generator

load. Excess steam is automatically bypassed directly to the main condenser by the pressure controlled bypass valves.

Chapter 15 and Appendix 15A examine the various failure mode considerations for this system relative to plant safety and operational effects. The expected and abnormal transients and accident events analyzed, envelope the failure modes associated with this system's components. These include:

(1) Failure of pressure regulator

(2) Turbine/generator trips

(3) Main condenser failures

(4) Breaks outside containment

7.7.2.5.2 Specific Regulatory Requirements Conformance

No specific regulatory requirements are imposed on the subject system.

The turbine-generator control system is not a safety related system. Protection systems which are provided as an integral part of the turbine-generator equipment override the turbine-generator control system. In the event of a turbine-generator trip due to a protective action, the control valve fast closure and the stop valve closure inputs to the RPS initiate reactor scram. (See Section 7.2.1.1.4.2(4) and 7.2.1.1.4.2(5).)

Pressure regulator malfunction which leads to low turbine inlet pressure is detected by pressure sensors provided in the main steam isolation system which in turn initiates closure of the main steam line isolation valves. (See section 7.3.1.1.3) Similarly, high turbine inlet pressure leads to detection of high reactor pressure by the RPS which initiates reactor scram. (See Section 7.2.1.1.4.2(2))

Control malfunction (e.g., pressure regulation malfunction - upscale) which results in high flow through the turbine control valves and the bypass valves is detected by main steam flow sensors provided in the main steam isolation system which initiates closure of the main steam line isolation valves (See Section 7.3.1.1.2) and a subsequent reactor scram. (See Section 7.2.1.1.4.2(6))

Interfaces between the subject non-safety systems and their components with safety-related systems (RPS, containment isolation control system, etc) are design in such a manner that failure of the non-safety components will not negate the necessary safety system functions.

7.7.2.6 Neutron Monitoring System Traversing In-Core Probe Subsystem (TIP) - Instrumentation and Controls

7.7.2.6.1 General Functional Requirement Conformance

An adequate number of TIP machines is supplied to assure that each LPRM assembly can be probed by a TIP and that one LPRM assembly (the central one) can be probed by every TIP to allow intercalibration. Typical TIPs have been tested to prove linearity. (Reference 1) The system has been field-tested in an operating reactor to assure reproducibility for repetitive

measurements. The mechanical equipment has undergone life testing under simulated operating conditions to assure that all specifications can be met. The system design allows semi-automatic operation for LPRM calibration and process computer use. The TIP machines can be operated manually to allow pointwise flux mapping.

7.7.2.6.2 Specific Regulatory Requirement Conformance

There are no specific regulatory requirements for the TIP subsystem.

7.7.2.7 Performance Monitoring System (PMS) - Instrumentation

7.7.2.7.1 General Functional Requirements

The PMS is designed to provide the operator with information and to supplement procedural requirements for control rod manipulation during reactor startup and shutdown. The system augments existing information from other systems such that the operator can start up, operate at power, and shutdown in an efficient manner. This system is not required to initiate or control any engineered safeguard or safety-related system.

7.7.2.7.2 Specific Regulatory Requirements Conformance

There are no specific regulatory requirements for the Performance Monitoring System.

7.7.2.8 Reactor Water Cleanup System - Instrumentation and Controls

7.7.2.8.1 General Functional Requirement Conformance

The reactor water clean-up instrumentation and controls are designed and supplied for plant equipment protection and operator information only. None of this instrumentation and control is required to initiate or control any engineered safeguard or safety system.

7.7.2.8.2 Specific Regulatory Requirements Conformance

The subject system has no specific regulatory requirements imposed on it but the following observation is included:

(1) Regulatory Guide 1.56

The Reactor Water Cleanup (RWCU) system provides the recorded conductivity measurements and alarms of influents and effluents of the demineralizers and records of the flow rate through each demineralizer as recommended in the guide.

(2) Regulatory Guide 1.70

See Subsection 7.1.2.6.17 for degree of conformance.

7.7.2.9 Area Radiation Monitoring System (ARMS) - Instrumentation and Controls

7.7.2.9.1 General Functional Requirements Conformance

The system monitors the gamma radiation levels at the selected locations, and provides indication locally as well as in the main control room. Local warning lights and audible alarms and annunciation in the main control room are actuated on FAIL, ALERT, and HIGH alarm conditions.

7.7.2.9.2 Conformance to 10 CFR 50, Appendix A

To meet requirements of 10 CFR 50 Appendix A General Design Criterion 63, monitors are placed in fuel and waste storage areas to give continuous display of gamma levels and to alarm if the level exceeds a preset level.

7.7.2.10 Gaseous Radwaste System - Instrumentation and Controls

7.7.2.10.1 General Functional Requirements Conformance

This system is not designed or required to be considered as a safety-related system.

The off-gas flow recorder is provided to keep a record of all discharge volumes. The flow measurements and recording accuracies are within 5% of indication for the flows measured.

All instrumentation with connections to the off-gas process lines are purchased and installed to not exceed a maximum leak rate of 1×10^{-6} cc/sec at 5 psid to limit any release of radioactive gases other than through the controlled process system release point after treatment.

The off-gas system is rated as a quality group "D" system. Refer to Topical Report NEDO-10734 for details.

The off-gas system provides tap locations in the process line to allow grab samples or process gas for continuous process monitoring. In the event that the discharge exceeds a prescribed safety limit, an isolation signal from the process radiation monitoring equipment will close the valve to the discharge vent.

Chapter 15 and Appendix 15A examine the various failure mode considerations for this system. The expected and abnormal transients and accident events analyzed, envelope the failure modes assoicated with this system's components. These include:

(1) Failure of carbon bed

(2) Failure of SJAE piping

7.7.2.10.2 Specific Regulatory Requirements Conformance

(1) Regulatory Guide 1.21, Measuring, Evaluating and Reporting Radioactivity in Solid Wastes and Releases of Radioactive Materials in Liquid and Gaseous Effluents from Light-Water-Cooled Nuclear Power Plants.

See subsection 7.7.2.19.

(2) Regulatory Guide 1.29, Seismic Design Classification.

See Section 11.3.1.3 for discussion.

(3) General Design Criteria 60, Control of Release of Radioactive Materials to the Environment.

See Section 11.3.1.2

(4) General Design Criteria 61, Fuel Storage and Handling and Radioactivity Control.

See Section 11.5.2.3

(5) General Design Criteria 63, Monitoring fuel and Waste storage.

See Section 11.5.4

(6) General Design Criteria 64, Monitoring Radioactivity Releases.

See Section 11.3.1.2.

(7) Regulatory Guide 1.68, Initial Test Programs for Water-Cooled Reactor Power Plants.

Conformance to this Regulatory Guide is discussed in Chapter 14.

(8) Regulatory Guide 1.70

See Subsection 7.1.2.6.17 for degree of conformance.

7.7.2.11 Liquid Radwaste Control Systems Instrumentation and Controls

7.7.2.11.1 General Functional Requirements Conformance

The liquid radwaste flow for discharge to the lake is flow controlled and monitored for activity level. The control switches for the discharge flow shutoff valve are keylocked and require plant supervisory and procedural control of any releases. The liquid radwaste and lake blowdown flows are recorded in the Main Control Room.

Radioactivity and quantity is the responsibility of plant supervisory personnel.

7.7.2.11.2 Specific Regulatory Requirements Conformance

7.7.2.11.2.1 Regulatory Guide 1.21

The equipment is designed to permit measurement of the quantity of radioactive liquid releases.

7.7.2.11.2.2 Regulatory Guide 1.143

This equipment is designed to prevent accidental releases of radioactive liquid.

7.7.2.11.2.3 Conformance to 10 CFR 50 Appendix A

Criterion 60

The requirements of Criterion 60 for controlling the release of radioactive liquids is met.

Criterion 61

The requirements of Criterion 61 for testing and suitable shielding for radiation protection is met.

Criterion 63

The requirements of Criterion 63 for monitoring radioactive waste process systems are met.

Criterion 64

The system conforms to Criterion 64 in that radiation monitoring is provided for discharge paths under all design conditions.

7.7.2.12 Solid Radwaste Control System Instrumentation and Controls

7.7.2.12.1 General Functional Requirements Conformance

Solid radwaste will be surveyed for activity level prior to release from the plant.

Radioactivity and quantity is the responsibility of plant supervisory personnel.

7.7.2.12.2 Specific Regulatory Requirements Conformance

7.7.2.12.2.1 Regulatory Guide 1.21

The equipment is designed to permit measurement of the quantity of radioactive solids.

7.7.2.12.2.2 Regulatory Guide 1.143

This equipment is designed to prevent accidental releases of radioactive solid.

7.7.2.12.2.3 Conformance to 10 CFR 50 Appendix A

Criterion 60

The requirements of Criterion 60 for controlling the release of radioactive solids is met.

Criterion 61

The requirements for Criterion 61 for testing and suitable shielding for radiation protection is met.

Criterion 63

The requirements for Criterion 63 for monitoring radioactive waste process systems are met.

Criterion 64

The system conforms to Criterion 64 in that radiation monitoring is provided for discharge paths under all design conditions.

7.7.2.13 Auxiliary Building HVAC System Instrumentation and Controls

7.7.2.13.1 Conformance to General Functional Requirements

Redundant fans have been provided for auxiliary building HVAC systems. The instrumentation and controls provided for these systems are non-nuclear safety-related.

Specific conformance of the instrumentation and controls to IEEE-279 does not apply.

Specific conformance of the instrumentation and controls to General Design Criteria 10CFR 50 Appendix A does not apply.

7.7.2.14 Fuel Building HVAC System Instrumentation and Controls

7.7.2.14.1 Analysis

Redundant fans have been provided for the fuel building HVAC system. The instrumentation and controls provided for these systems are non-nuclear safety-related.

7.7.2.15 Drywell Cooling System Instrumentation and Controls

7.7.2.15.1 General Functional Requirements Conformance

The drywell cooling system (which consists of primary and supplemental systems) operates to remove latent and sensible heat from the drywell environment. The systems function to distribute cooling air throughout the drywell to maintain relatively consistent ambient temperatures and to minimize local hot spots and stagnant areas. The system operates during all normal plant operating conditions, but not during abnormal operating conditions except loss-of-offsite power.

7.7.2.15.2 Specific Regulatory Requirements Conformance

(1) Each drywell chilled water containment isolation valve is redundant to one another in the same line. They are nuclear safety-related and powered from Class 1E divisional power sources.

(2) Portions of the control for other equipment which trip chillers, fans, and pumps on a LOCA condition are also safety-related.

(3) All other drywell cooling HVAC instrumentation and controls located outside the containment building are non-safety related.

7.7.2.16 Drywell Purge System Instrumentation and Controls

7.7.2.16.1 General Functional Requirements Conformance

The drywell purge system is not safety-related.

The system incorporates features to assure its reliable operation over the full range of normal station operations. These features include the installation of redundant principal system components.

Because of sufficient redundancy in the system the instruments and controls are not redundant.

7.7.2.16.2 Special Regulatory Requirements Conformance

(1) Each drywell and containment isolation valve is redundant to one another in the same line and powered from Class 1E bus in conformance with IEEE-279 and IEEE-308.

(2) All other drywell purge system instrumentation and controls, located outside the containment building are non-safety-related.

7.7.2.17 Containment Building HVAC Instrumentation

7.7.2.17.1 General Functional Requirements Conformance

(1) The containment building HVAC instrumentation maintains a negative pressure inside the containment building with respect to the outdoor atmosphere pressure to prevent exfiltration of potentially contaminated containment building air.

(2) It maintains airflow inside the containment building from clean areas to areas of greater potential radioactivity to control and minimize the spread of contamination.

(3) The system is not required to operate following a loss of off-site power, design-basis accident (DBA), or safe shutdown earthquake (SSE).

(4) The containment building isolation valves are required to maintain structural and functional integrity during and after such abnormal operating conditions.

7.7.2.17.2 Specific Regulatory Requirements Conformance

(1) Each supply and exhaust containment isolation valve is redundant to one another in the same line. They are nuclear safety-related and powered from independent Class 1E divisional power sources. Instrumentation and controls for these valves have been designed for high functional reliability and inservice testability by conformance to IEEE Standard 279.

(2) All other containment building HVAC instrumentation and controls, located outside the containment building are non-safety-related and are powered from non-ESF divisional power sources.

7.7.2.18 Radwaste Building HVAC Instrumentation and Controls

7.7.2.18.1 General Functional Requirements Conformance

(1) The radwaste building ventilation system is not safety-related.

(2) The system incorporates features to assure its reliable operation over the full range of normal station conditions. These features include the installation of redundant principal system components.

7.7.2.18.2 Specific Regulatory Requirements Conformance

Redundant fans have been provided for the radwaste building HVAC system. The instrumentation and controls provided for these systems are non-nuclear safety-related.

7.7.2.19 Process Radiation Monitoring System – Instrumentation and Controls

7.7.2.19.1 General Functional Conformance

The process liquid radiation monitors monitor their respective process liquids and will indicate to operations personnel when the radiation level exceeds the preestablished limits. The plant service water and liquid radwaste discharge radiation monitors possess radiation detection and monitoring characteristics sufficient to inform plant operations personnel of discharge radiation levels above preset limits.

The air-ejector off-gas PRM's monitor the off-gas system before and after the carbon bed and provides alarm annunciators and off-gas system isolation under appropriate "out of acceptance range" radiation levels. The monitors have monitoring characteristics sufficient to provide accurate indication of radioactivity in the air ejector off-gas. The monitors provide the operator with sufficient information to easily control the activity release rate. Sufficient redundancy is provided to allow maintenance on one channel of the post-treatment monitors without losing the system indications.

The physical location and monitoring characteristics of the standby gas treatment system exhaust radiation monitoring channels are adequate to detect abnormal amounts of radioactivity in the vent and to sound an alarm in the main control room.

The common station HVAC exhaust PRM's monitor the radiation level of the station's gaseous ventilation effluents, activating alarm annunciators if the observed level is outside of the allowable range.

The SGTS and HVAC stack PRM's are selected with monitoring characteristics sufficient to provide plant operations personnel with accurate indication of radioactivity being released to environs through the station vent stack and standby gas treatment system stack.

The continuous airborne radiation monitors (CAM) are provided to measure, indicate, and record the levels of airborne radioactivity at locations where significant airborne radioactivity is likely. Provisions are also provided to monitor ducts or process lines with CAMs to detect radioactivity which may be released due to malfunctions of equipment.

7.7.2.19.2 Conformance to Specific Regulatory Requirements

7.7.2.19.2.1 Regulatory Guides Conformance

7.7.2.19.2.1.1 Regulatory Guide 1.21

The equipment is designed to permit measurement of the quantity of radioactive gases released, iodine releases, particulate releases, and liquid releases.

7.7.2.19.2.2 Conformance to 10 CFR 50 Appendix A

Criterion 13

The system conforms to Criterion 13 in that the instruments employed adequately cover the anticipated range of radiation under normal operating conditions with sufficient margin to include postulated accident conditions.

Criterion 63

The requirements of Criterion 63 for monitoring radioactive waste process systems are met.

Criterion 64

The subsystem conforms to Criterion 64 in that radiation monitoring is provided for discharge paths under all design conditions.

7.7.2.20 Fire Protection and Suppression System

7.7.2.20.1 General Functional Requirement Conformance

The fire detection system detectors are wired to provide alarm and manual actuation of a Halon 1301 extinguishing agent to flood the PGCC floor section cable ducts by activating a manual pull station located at the end of each floor section. As a back up the operator can use hand-held fire extinguishers.

7.7.2.20.2 Specific Regulatory Requirement Conformance

The PGCC design complies with the applicable requirements as described in the Topical Report NEDO-10466-A, "Power Generation Control Complex."

7.7.2.21 Computer Systems

The computer systems are described in Sections 7.7.1.7 and 7.7.1.21. These digital computer systems are structured and applied in a highly reliable fashion to support efficient operational continuity of the nuclear unit. While they perform no safety function and cannot affect any safety-related system, their design is consistent with the goal of continuous availability.

7.7.2.22 Neutron Monitoring System - Instrumentation and Controls

7.7.2.22.1 Source Range Monitor Subsystem

7.7.2.22.1.1 General Functional Requirement Conformance

The arrangement of the neutron sources (when installed) and Source Range Monitors (SRMs) in the reactor is shown in drawing Figure 7.7-2. For Cycle 1 this arrangement produces at least three counts per second in the SRM using the sensitivity noted in Subsection 7.7.1.22.1.1 and the design source strength at initial reactor startup. For subsequent cycles the irradiated fuel provides the source of neutrons. (The initial startup neutron sources were removed at the end of Cycle 1.)

Normal startup procedures ensure that withdrawal of control rods is distributed about the core to prevent excessive multiplication in any one section of the core. Hence, each SRM chamber can respond in some degree during the initial rod withdrawal.

Examination of the sensitivity of the SRM detectors and their operating ranges of 10^6 counts/sec indicates that the IRM is on scale before the SRM reaches full scale (Figure 7.6-22).

7.7.2.22.1.2 Specific Regulatory Requirements Conformance

There are no specific regulatory or IEEE requirements imposed on the Source Range Monitor Subsystem.

7.7.2.23 Main Control Room Annunciator

7.7.2.23.1 General Functional Requirements Conformance

The main control room annunciator is designed to attract the operator's attention to a plant variable that is out of the established operating limit. This is accomplished by the use of a lighted window and an audible alarm system.

7.7.2.23.2 Specific Regulatory Requirements Conformance

The main control room annunciator, together with other power plant systems, particularly fulfills the requirements of the codes and standards:

GDC 13

The main control room annunciator monitors variables and systems outside their anticipated ranges of normal operation, and anticipated operational occurrences.

IEEE 279 (4.12), Reg Guide 1.47

The main control room annunciator provides system level indication of bypasses, for some systems. See Section 7.2 thru 7.6.

IEEE 344, Reg. Guide 1.29

Portions of the main control room annunciator are mounted with safety related equipment, in seismic category 1 panels. As such, they are required to meet certain requirments of IEEE 344, and Reg. Guide 1.29. Further discussion is contained in Section 3.10.

7.7.2.24 Leak Detection System (LDS) - Non-Safety Related Instrumentation and Controls

7.7.2.24.1 General Functional Requirements Conformance

The non-safety related portion of the leak detection system consists of temperature, pressure, flow, and airborne gaseous and particulate fission product sensors with associated instrumentation used to indicate leakage from the reactor coolant pressure boundary and to actuate annunciators if leakage is detected.

7.7.2.24.2 Specific Regulatory Requirements Conformance

Reg. guide 1.45

Conformance to reg. guide 1.45 is discussed in subsection 5.2.5.10.

10CFR50, Appendix A

GDC 30

The non-safety related portion of the LDS satisfies, in part, the requirements of GDC 30.

GDC 54

The non-safety related portion of the LDS satisfies, in part, the requirements of GDC 54.

IEEE 344

The Fission Product Monitor sample panels 1E31-P001 & 2 are qualified to the requirements of IEEE 344. In addition, the differential pressure transmitter (sump level method) for measuring Drywell floor drain influent flow (1E31-N764) has also been qualified to IEEE 344. The Regulatory Guide 1.45 requirement for these systems is only OBE qualification but that is enveloped. There are various other non-safety leak detection components OBE qualified to lesser standards. More details can be found in Regulatory Guide 1.45 and the CPS compliance statement to it found in sections 1.8 and 5.2.5.10.

7.7.2.25 Anticipated Transient Without Scram (ATWS)

7.7.2.25.1 General Functional Requirements Conformance

The non-safety-related alternate rod insertion (ARI) subsystem prevents and the non-safety-related recirculation pump trip (RPT) subsystem mitigates the potential consequences of a postulated ATWS event. The ARI subsystem functions independently of the reactor protection (trip) system (RPS) by providing an alternate means of venting the scram air headers by opening the redundant scram valves. The RPT subsystem functions independently of the

nuclear safety-related RPT system by providing an alternate means of tripping the recirculation pump motors and the low frequency motor/generator sets.

7.7.2.25.2 Specific Regulatory Requirements Conformance

The ARI and RPT subsystem of the ATWS system are in compliance with the ATWS Rulemaking in 10 CFR 50.62.

7.7.2.26 Safety Parameter Display System (SPDS)

7.7.2.26.1 General Functional Requirements

The computer systems are described in Sections 7.7.1.7, 7.7.1.21, and 7.7.1.26. The Safety Parameter Display System (SPDS) display is a part of the PMS/DCS Systems. The CPS SPDS provides a concise display of critical plant variables to the Main Control Room (MCR) operators to aid them in rapidly and reliably assessing the safety status of the plant. The variables monitored by the CPS SPDS provide information symptomatic of normal, abnormal and emergency conditions consistent with Chapter 15 and the Emergency Operating Procedures (EOPs). This system is not required to initiate or control any engineered safeguard or safety-related systems.

7.7.2.26.2 Specific Regulatory Requirements Conformance

There are no specific regulatory requirements for the Safety Parameter Display System. NUREG-0737 Supplement 1 does not require the SPDS to meet the requirements applicable to control room instrumentation (e.g. 10CFR Part 50; single-failure requirements). Since the CPS SPDS is not designed to Class 1E or Seismic Category 1 criteria, it is not required to mitigate the consequences of an accident, and does not affect the activation/trip of required safety-related systems.

Additionally, the electrical isolation of the SPDS from safety-related systems protect the safety systems from potential faults in the SPDS. This provides additional assurance that no unreviewed safety questions exist and technical specification changes are not required.

Refer to Appendix D, section 1.D.2, Plant Safety Parameter Display Console, Historical Information for CPS response to the NRC positions in regards to SPDS requirements.

7.7.3 References

1 Morgan, W. R., "In Core Neutron Monitoring System for General Electric Boiling Water Reactors," APED-5706, November 1968 (Rev. April 1969).

2. Nuclear Station Engineering Standard MS-02.00, Maintenance of Equipment Qualification Program Manual.

TABLE 7.7-1
CRD HYDRAULIC SYSTEM PROCESS INDICATORS

MEASURED VARIABLE	CONTROL ROOM INDICATORS
Total system flow	Flow indicator
Drive water pump suction pressure	Annunciator
Drive water filter differential pressure	Annunciator
Cooling water header differential pressure	Pressure indicator
Charging water header pressure	Annunciator and indicator
Drive water flow rate	Flow indicators (4)
Cooling water header flow rate	Flow indicator
Control rod drive temp	Annunciator
Drive water differential pressure	Indicator
Scram Discharge volume not drained	Annunciator
Scram valve pilot air header pressure	Annunciator
Suction filter differential pressure	Annunciator
Flow control valve position	Indicator
Scram accumulator low pressure/high level	Annunciator

TABLE 7.7-2
SRM SYSTEM TRIPS

TRIP FUNCTION	TRIP ACTION
SRM upscale	Rod block, amber light display annunciator.
SRM instrument inoperative	Rod block, amber light display annunciator.
Detector Retraction Permissive (SRM downscale)	Bypass detector full-in limit switch when above preset limit, annunciator, green light display, rod block when below preset limit with IRM range switches on first two ranges.
SRM period	Annunciator, white light display.
SRM downscale	Rod block, annunciator, amber light display.
SRM bypassed	White light display.

Note: Set points are listed in the CPS Operational Requirements Manual.

TABLE 7.7-3
ANNUNCIATOR LOGIC SEQUENCE

Condition	Operator Action	Window Light	Audible Alarm	Audible Ring Back[3]
Normal	None	Off	Off	Off
Alert	None	Fast flash	On	Off
Alert	Silence	Fast flash	Off	Off
Alert	Acknowledge[4] after silence	Steady On	Off	Off
Return to normal after acknowledge	None	Slow flash	Off	On
Return to normal after acknowledge	Reset	Off	Off	Off
Alert[1]	Acknowledge before silence or reset	Fast flash	On	Off
Alert[1]	Reset after silence but befoe acknowledge	Fast flash	Off	Off
Return to normal before silence	None	Fast flash	On	Off
Return to normal before silence1	Acknowledge before silence, or reset before silence	Fast flash	On	Off
Return to normal before silence	Silence	Fast flash	Off	Off
Return to normal before silence	Acknowledge after silence	Slow flash	Off	On
Return to normal after silence but before acknowledge	None	Fast flash	Off	Off
Return to normal[1] after silence but before acknowledge	Reset after silence but before acknowledge	Fast flash	Off	Off
Return to normal after silence but before acknowledge	Acknowledge after silence	Slow flash	Off	On
Test[2]	Test	Fast flash	On	Off

1 Operation of the pushbuttons must take place in the following sequence: Silence, Acknowledge, Reset. Any other sequence will not change the state of the annunciator.

2 Test button is so arranged that no change of state takes place due to actuation of the TEST button. Any alert conditions existing before operation of TEST button is displayed after the test.

3 Ring back is an audible signal of a different pitch or warble when an abnormal condition clears. An alarm audible takes precedence over a ring back audible under all conditions.

4 On multiple input windows, when one input trips and is acknowledged, the window light will be "steady on." When a second input trips, the window will return to "fast flash" and the audible alarm will again sound.

Figures 7.1-1 and 7.1-2
Deleted

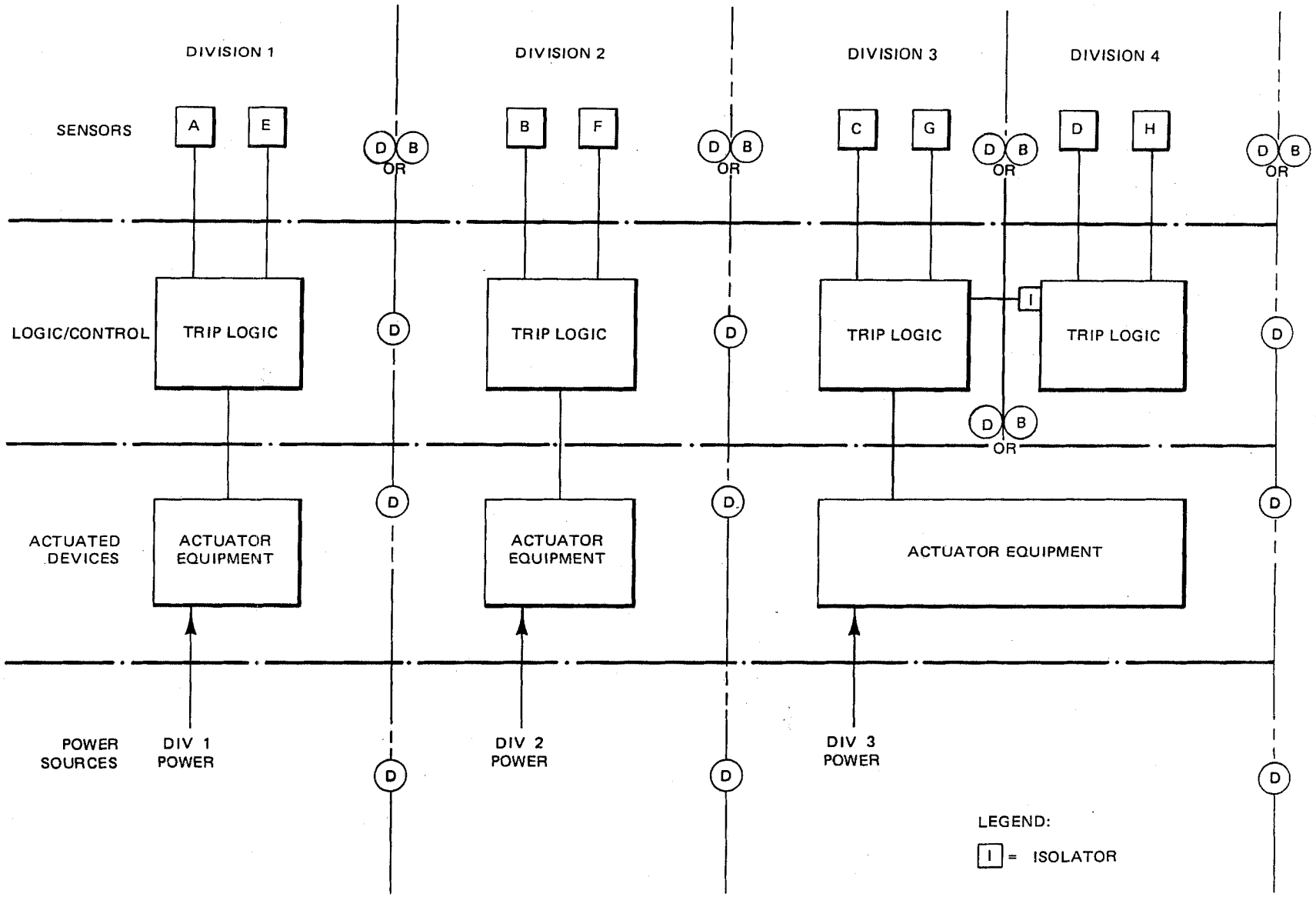

Figure 7.1-3. ECCS Separation Concept

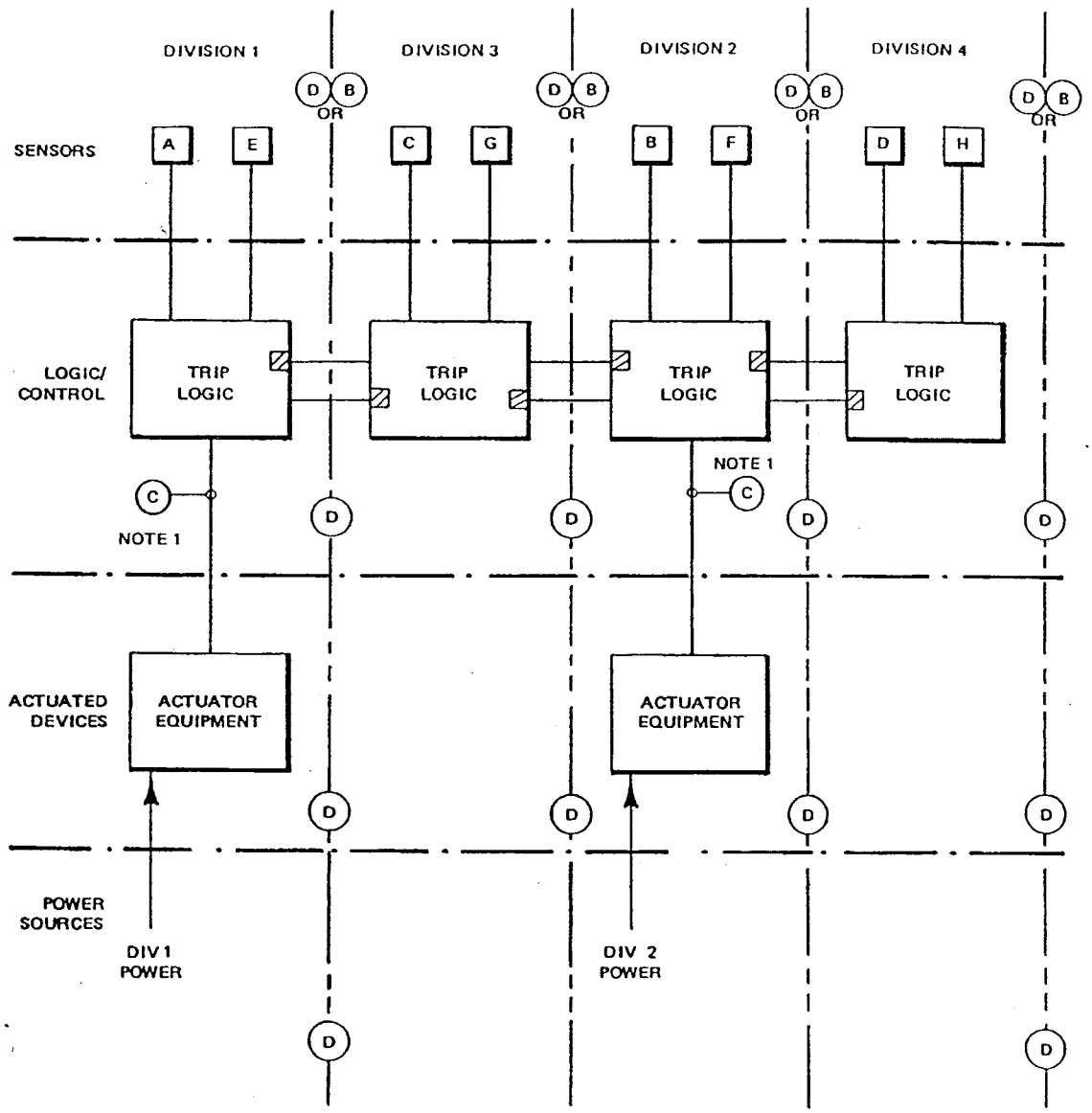

NOTE 1: CONDUIT USED ONLY FOR MAIN STEAM ISOLATION VALVES

Figure 7.1-4. NSSS Separation Concept

BWH 6

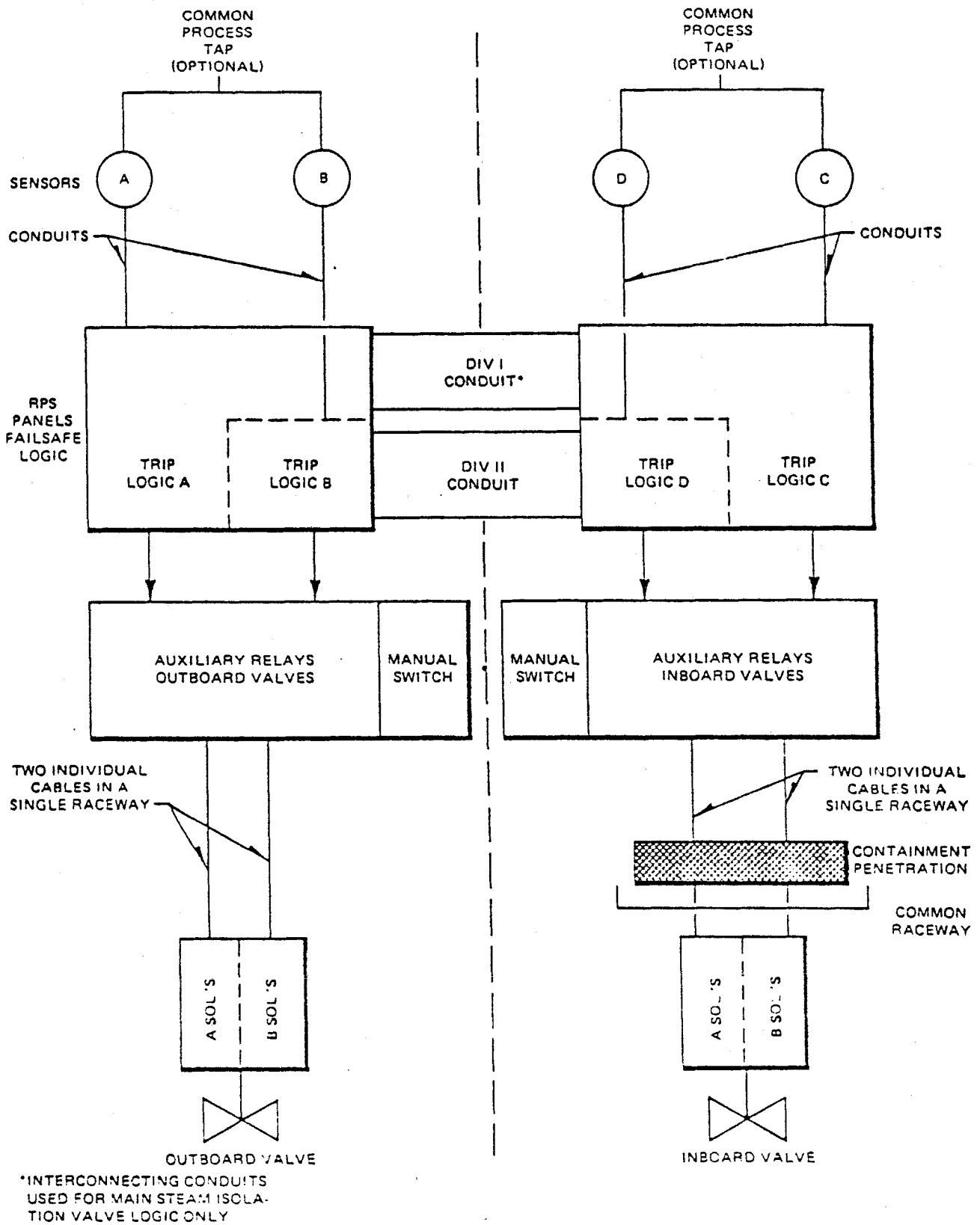

Figure 7.1-5. Main Steam Line Isolation Separation Concept

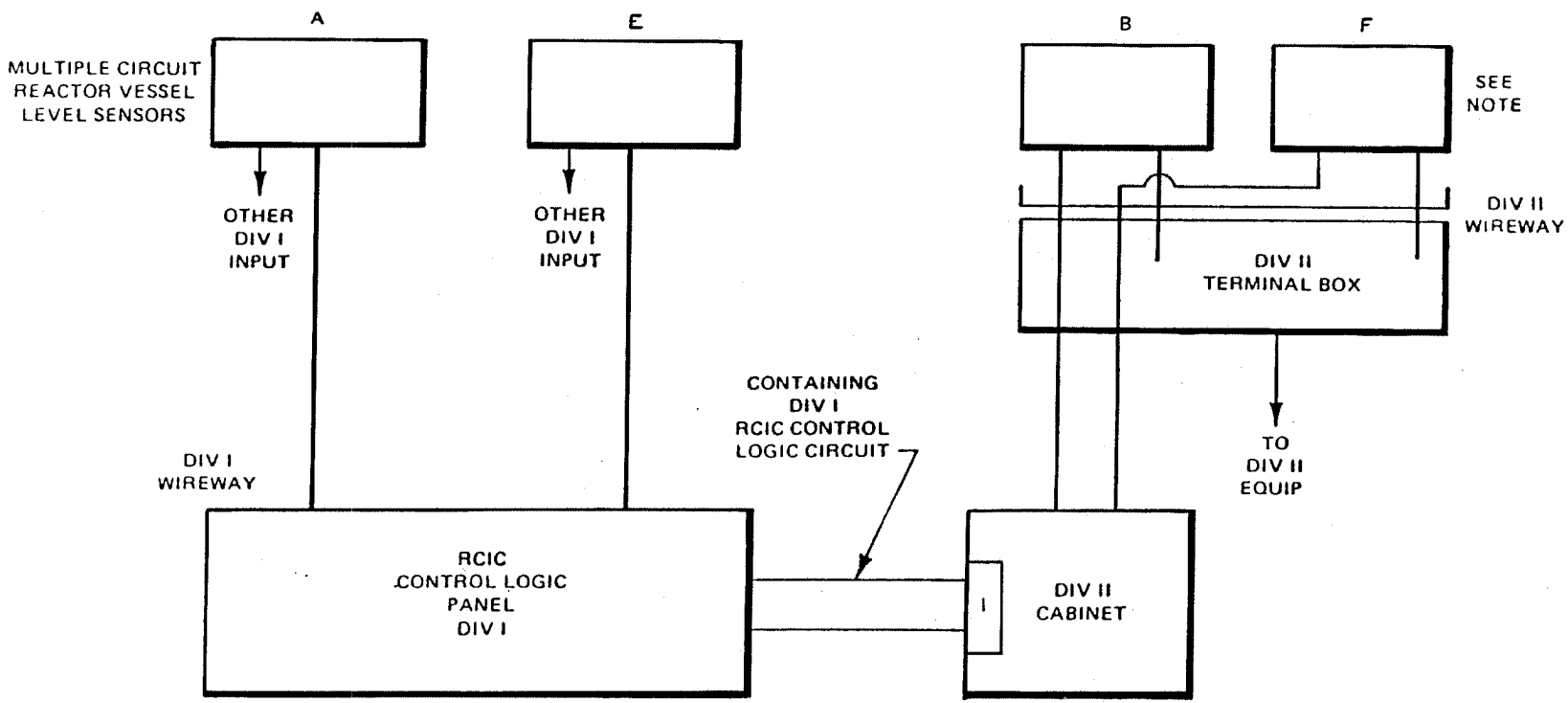

NOTE: 1) CIRCUITS FOR RCIC INITIATIONS ARE ELECTRICALLY SEPARATE FROM THOSE USED FOR OTHER DIV II INPUTS

2) I = ISOLATOR

Figure 7.1-6. RCIC Sensor Separation Scheme

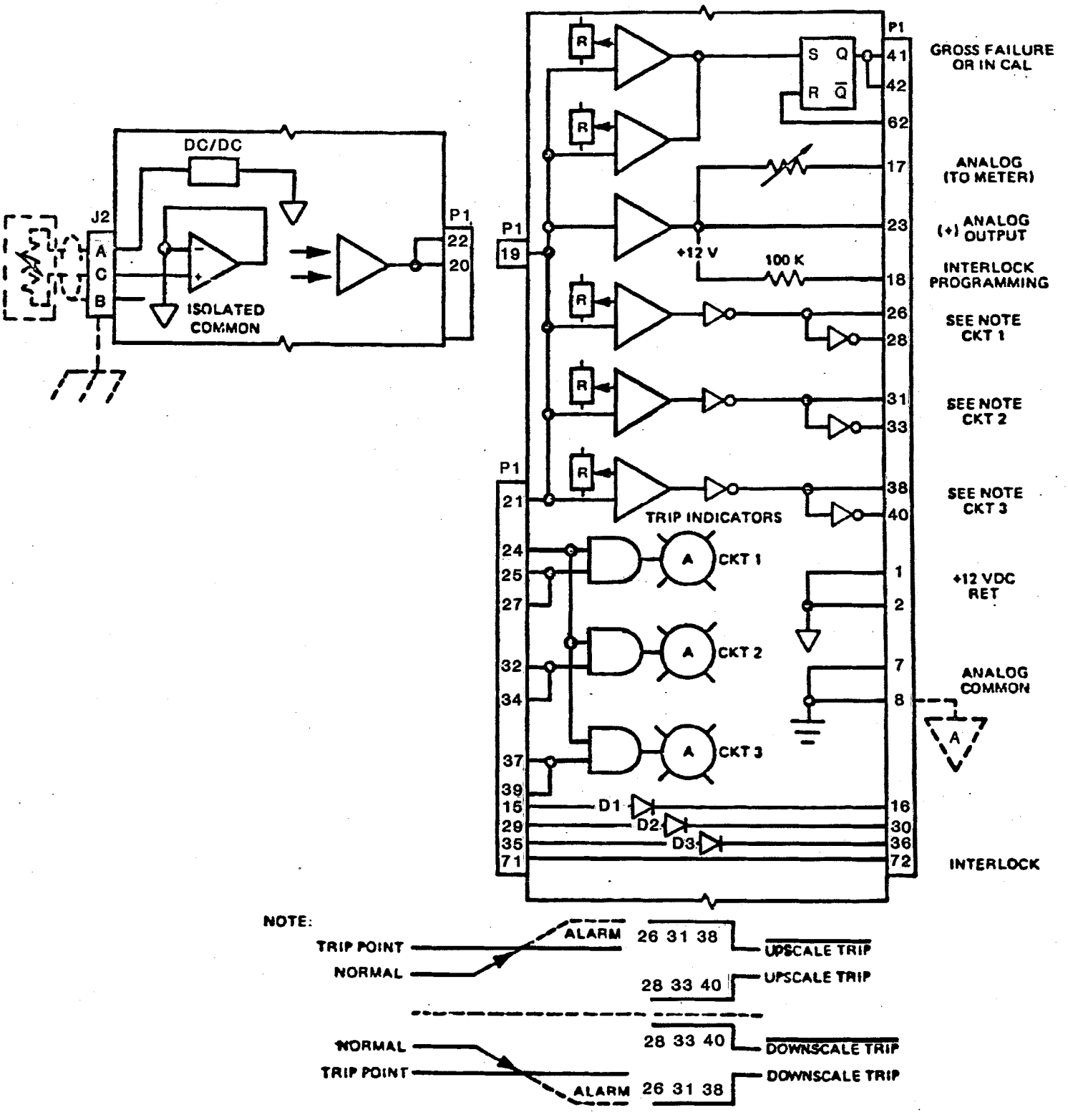

FIGURE 7.1-7. ANALOG TRIP MODULE (4-20 mA) SIMPLIFIED DIAGRAM

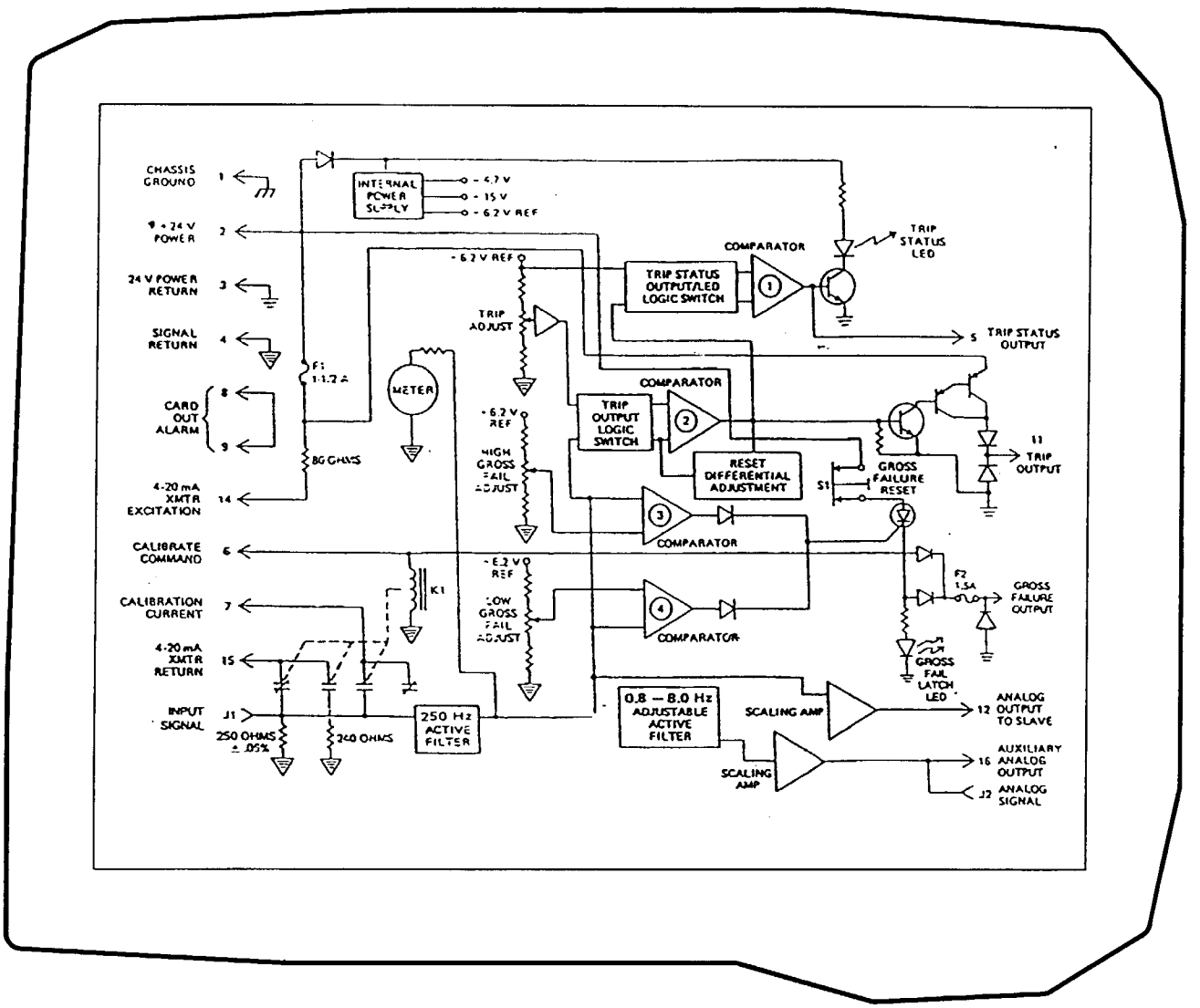

CLINTON POWER STATION
UPDATED SAFETY ANALYSIS REPORT

FIGURE 7.1-8
NON-NSPS MASTER TRIP UNIT
FUNCTIONAL BLOCK DIAGRAM

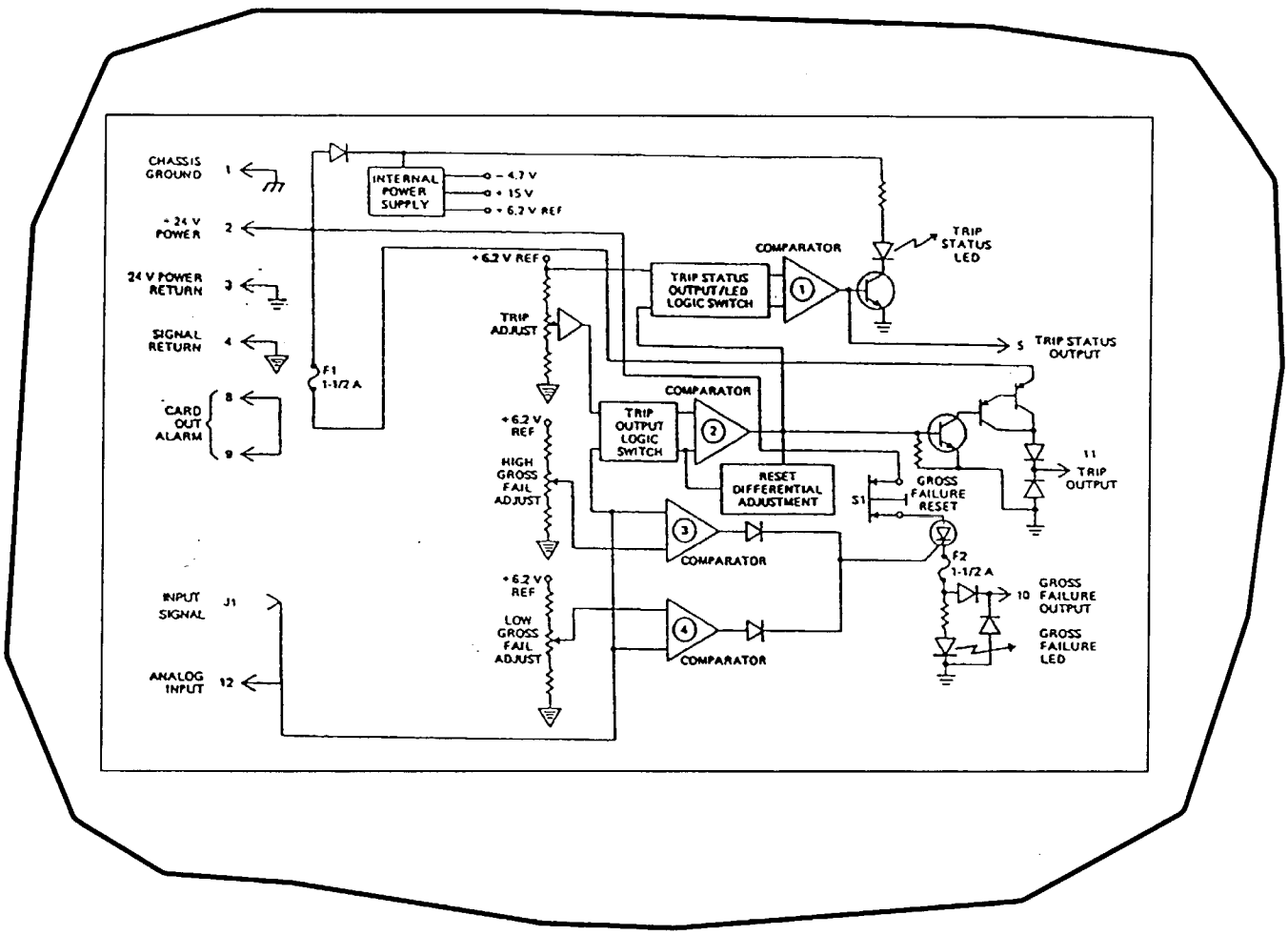

CLINTON POWER STATION
UPDATED SAFETY ANALYSIS REPORT

FIGURE 7.1-9
NON-NSPS SLAVE TRIP UNIT
FUNCTIONAL BLOCK DIAGRAM

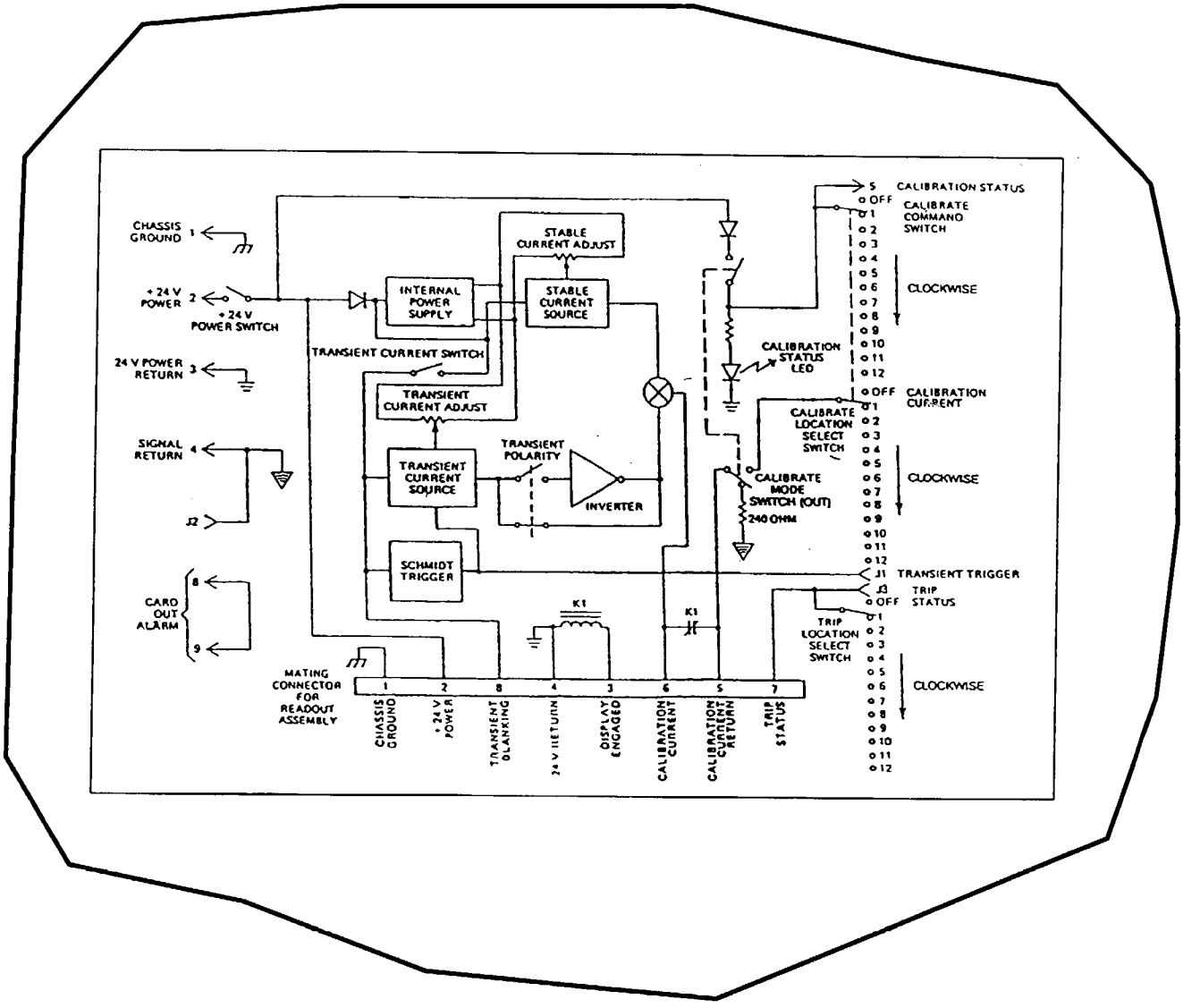

CLINTON POWER STATION
UPDATED SAFETY ANALYSIS REPORT

FIGURE 7.1-10
NON-NSPS CALIBRATION
FUNCTIONAL BLOCK DIAGRAM

FIGURE 7.2-1

HAS BEEN DELETED

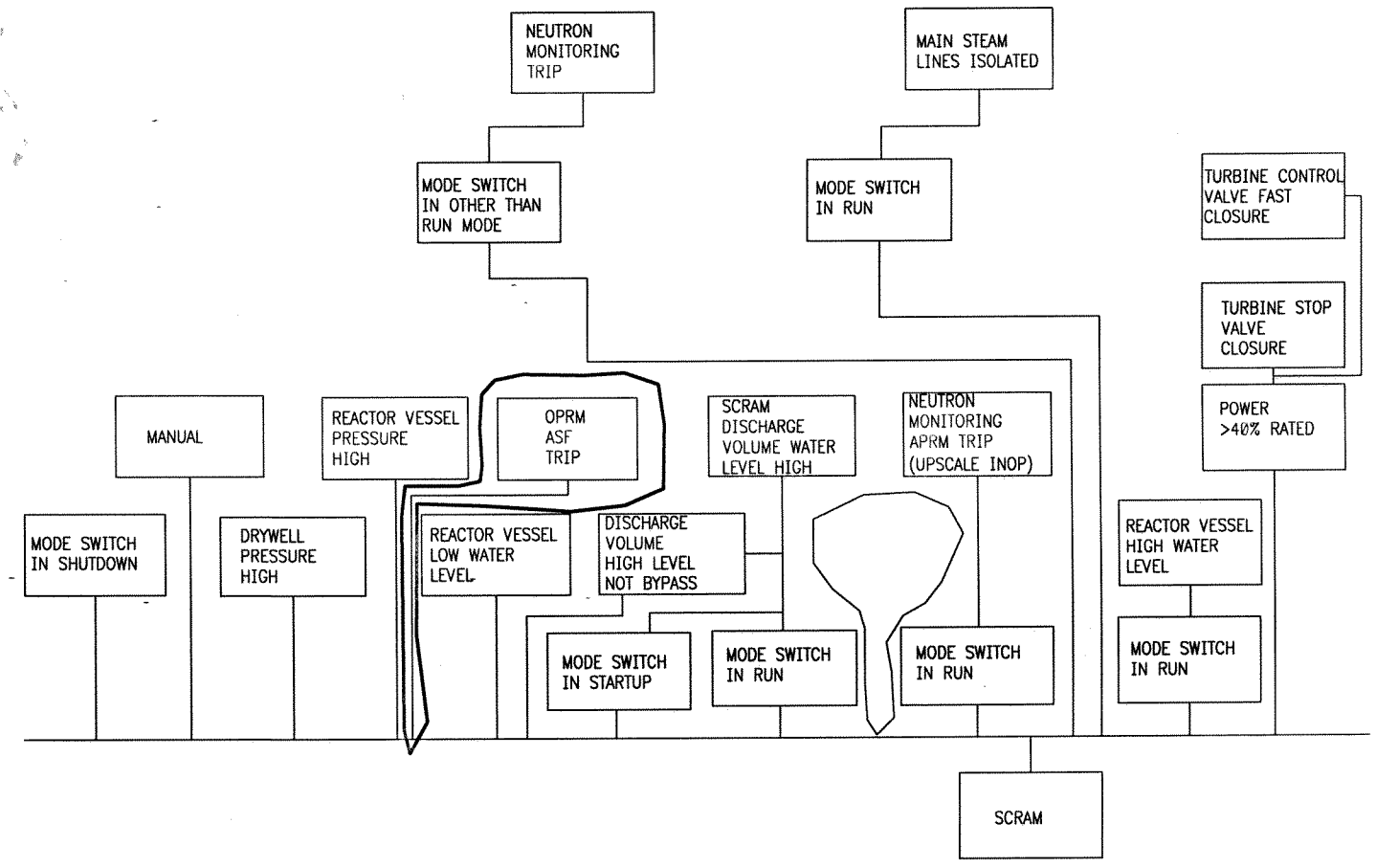

Figure 7.2-2. Reactor Protection System Scram Functions

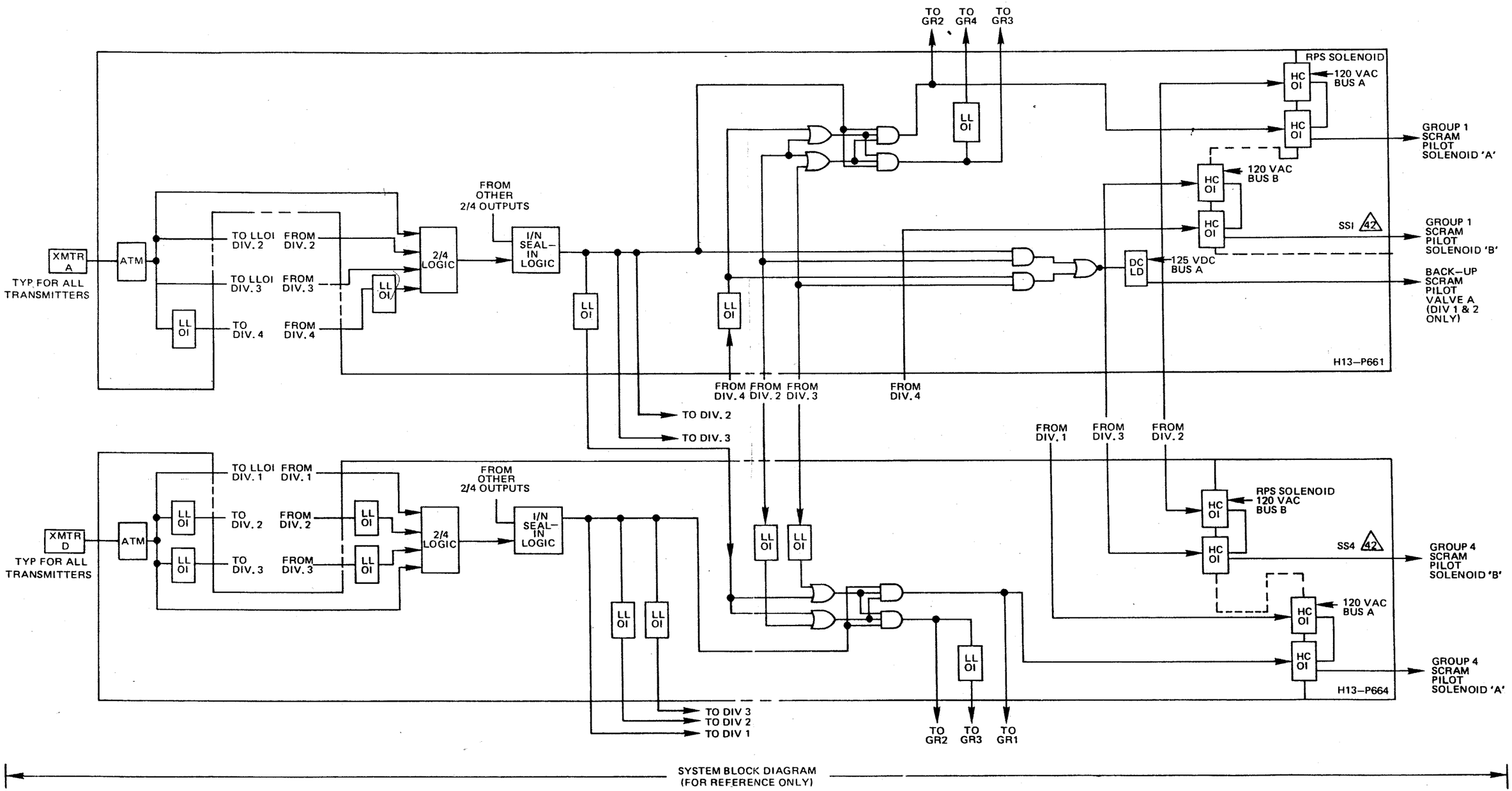

Figure 7.2-3. RPS Arrangement of Channels and Logic

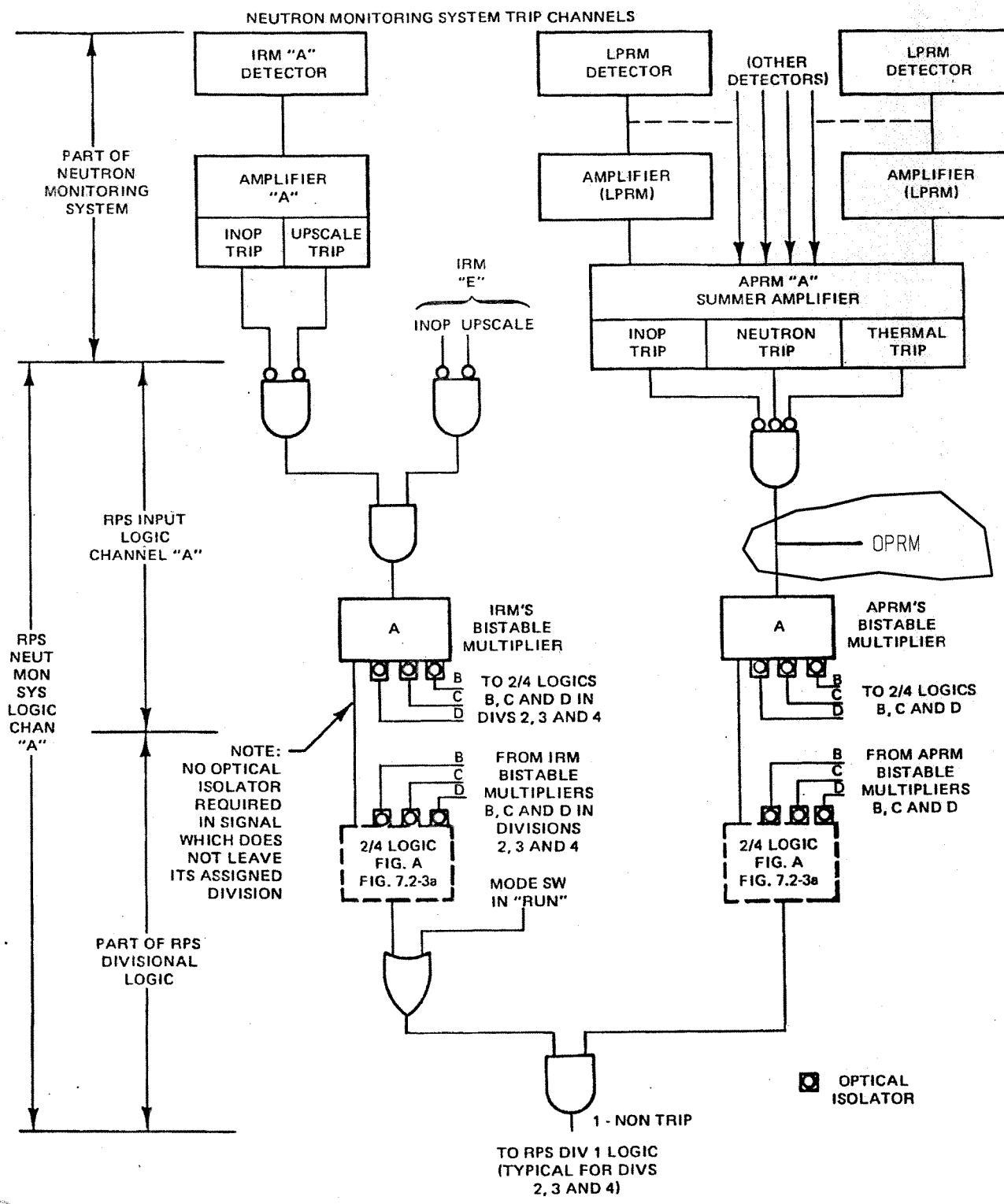

Figure 7.2-4. Relationship Between Neutron Monitoring System and Reactor Protection System

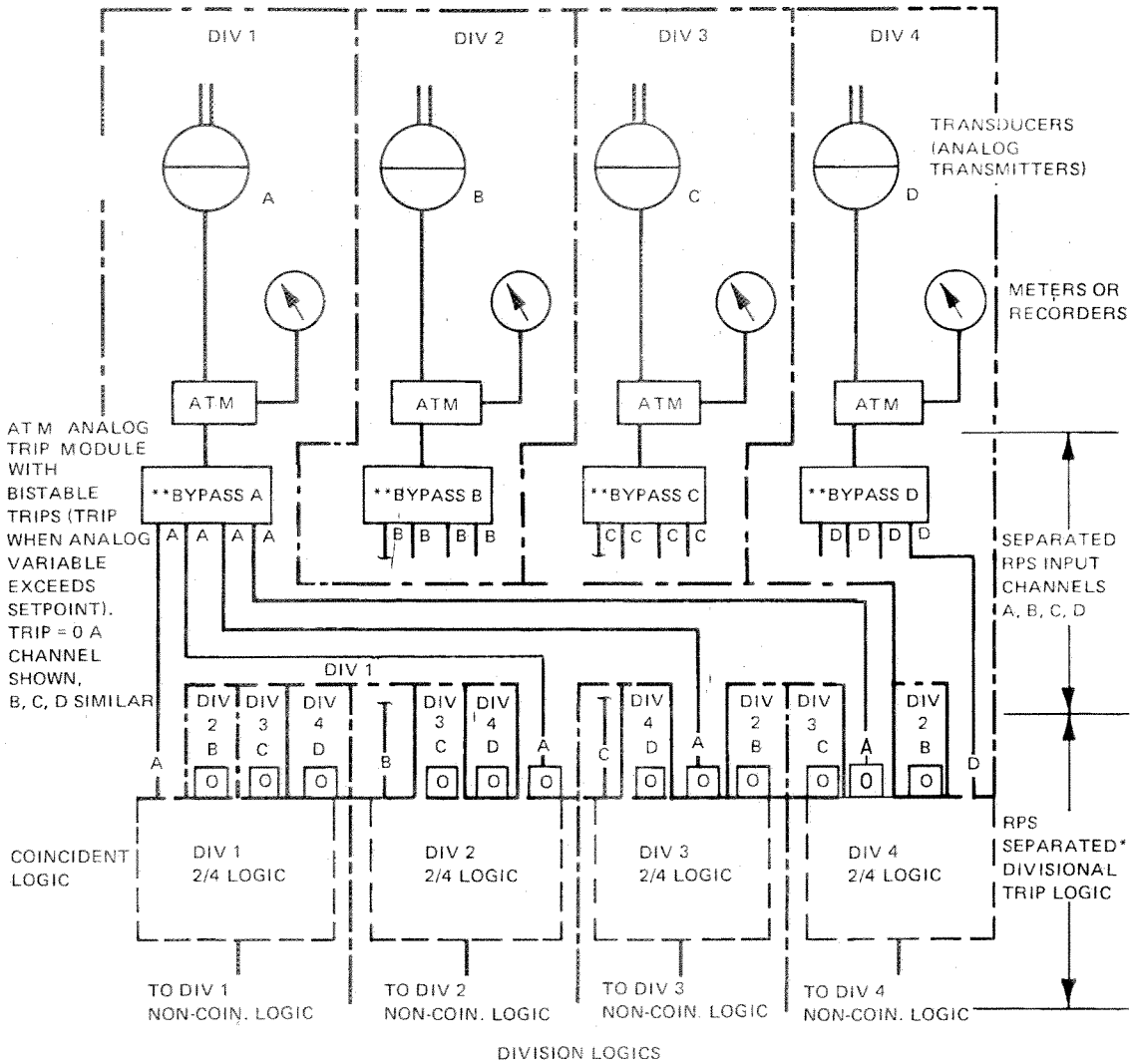

TYPICAL CONFIGURATION FOR:

- REACTOR VESSEL LOW WATER LEVEL
- DRYWELL HIGH PRESSURE
- NUCLEAR SYSTEM HIGH PRESSURE
- REACTOR VESSEL HIGH WATER LEVEL

O = OPTICAL ISOLATOR

——— DIVISIONAL BOUNDARIES

*SEE SUBSECTION 7.1.2.2.5 FOR SEPARATION CRITERIA

**BYPASS LIMITED TO ONE DIVISION AT A TIME

CLINTON POWER STATION
UPDATED SAFETY ANALYSIS REPORT

FIGURE 7.2-5
TYPICAL ARRANGEMENT OF ANALOG CHANNELS AND LOGICS

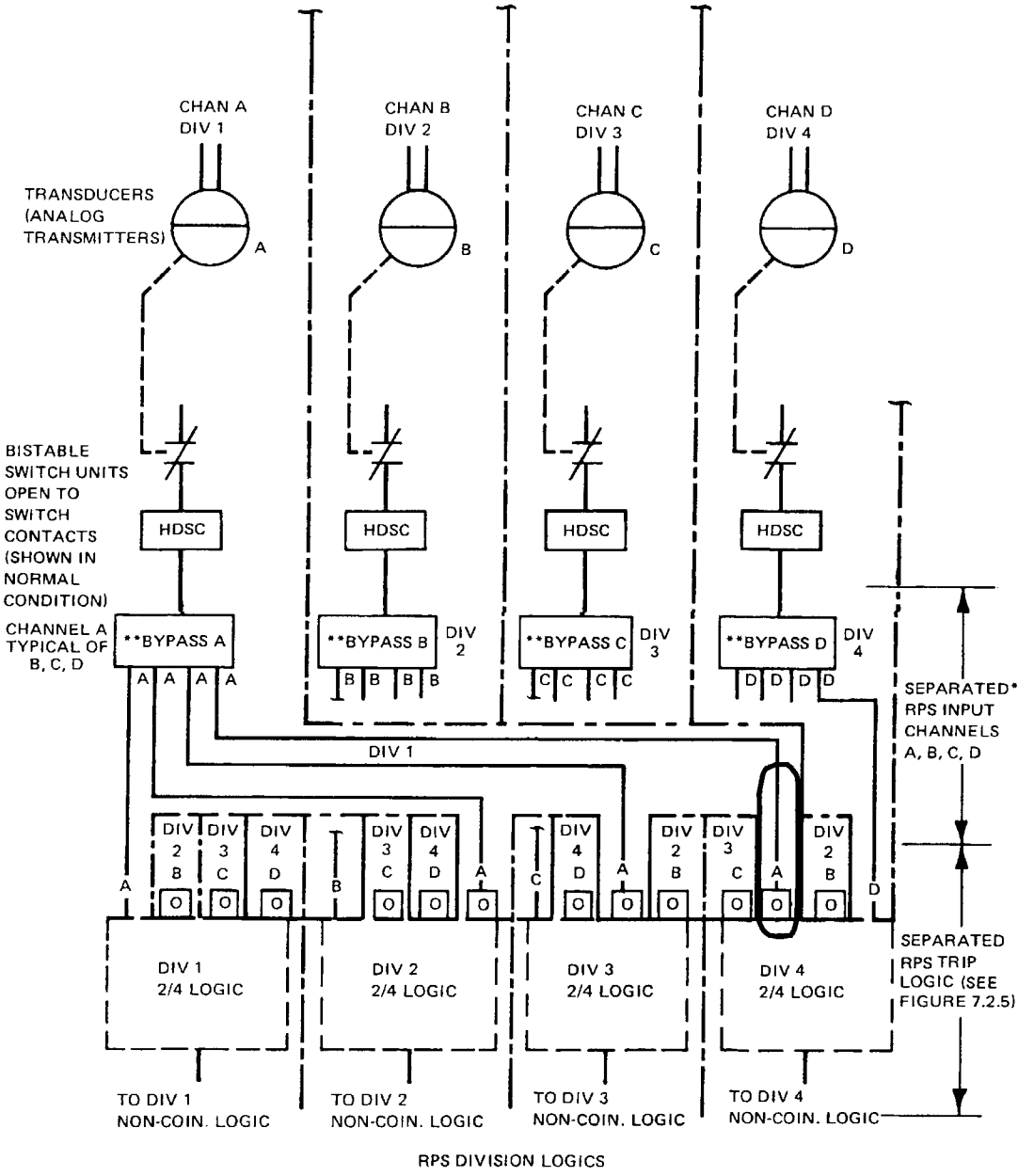

RPS DIVISION LOGICS

HDSC —HIGH-VOLTAGE DIGITAL SIGNAL CONDITIONER
—(OPTICALLY COUPLED BUT NOT PHYSICALLY SEPARATED)
O —OPTICAL ISOLATOR
— · — —DIVISIONAL BOUNDARY

* SEE SUBSECTION 7.1.2.2.5 FOR SEPARATION CRITERIA
**BYPASS LIMITED TO ONE DIVISION AT A TIME

CLINTON POWER STATION
UPDATED SAFETY ANALYSIS REPORT

FIGURE 7.2-6
TYPICAL ARRANGEMENT OF DIGITAL
CHANNELS AND LOGICS

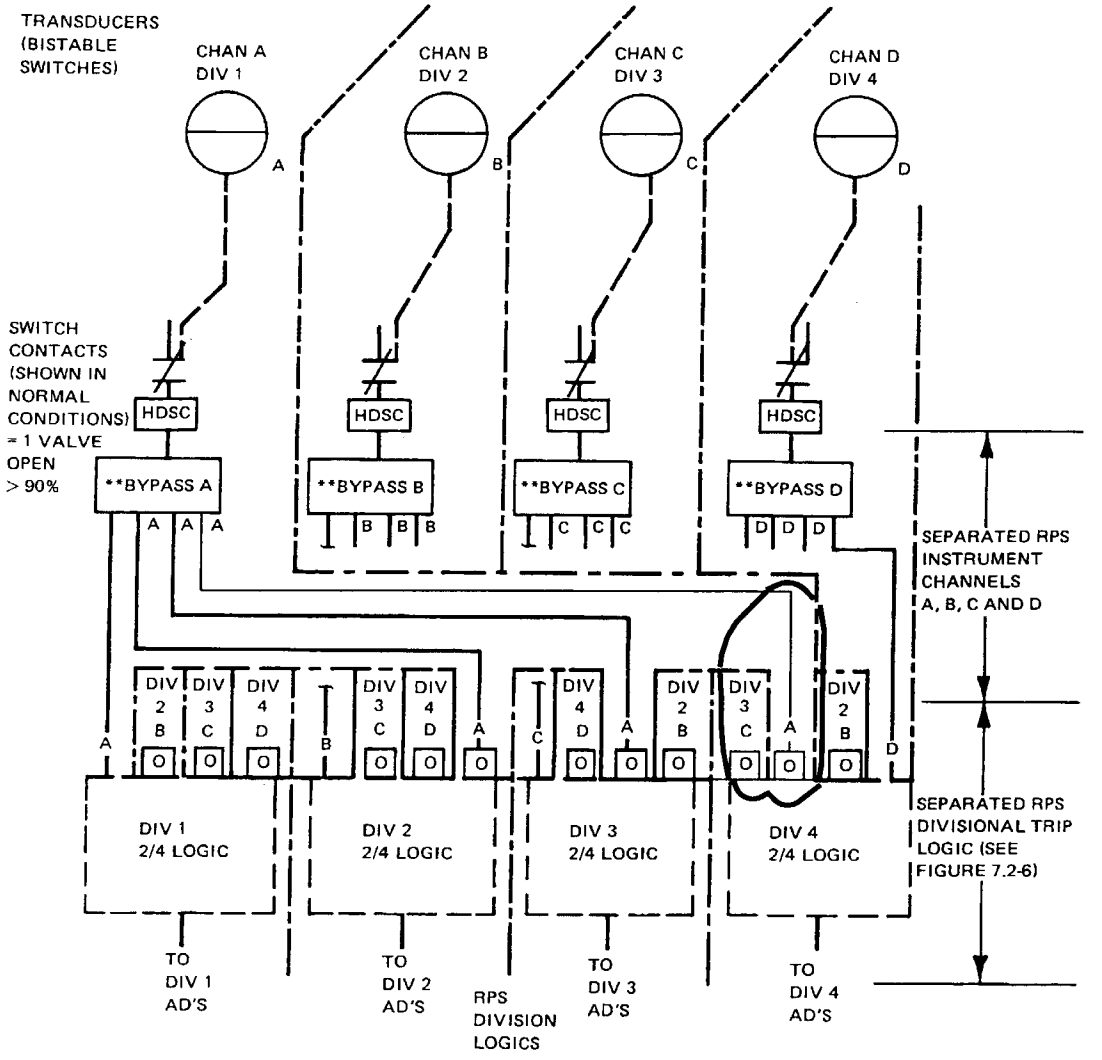

NOTE: TWO OUT OF FOUR STOP VALVES MUST CLOSE TO CAUSE A SCRAM

HDSC = HIGH VOLTAGE DIGITAL SIGNAL CONDITIONER (OPTICALLY COUPLED BUT NOT PHYSICALLY ISOLATED)

AD = ACTUATION DEVICES

O = OPTICAL ISOLATOR

DIVISIONAL BOUNDARIES

** BYPASS LIMITED TO ONE DIVISION AT A TIME

CLINTON POWER STATION
UPDATED SAFETY ANALYSIS REPORT

FIGURE 7.2-7
TYPICAL CONFIGURATION FOR TURBINE STOP VALVE CLOSURE REACTOR TRIP COINCIDENT LOGIC

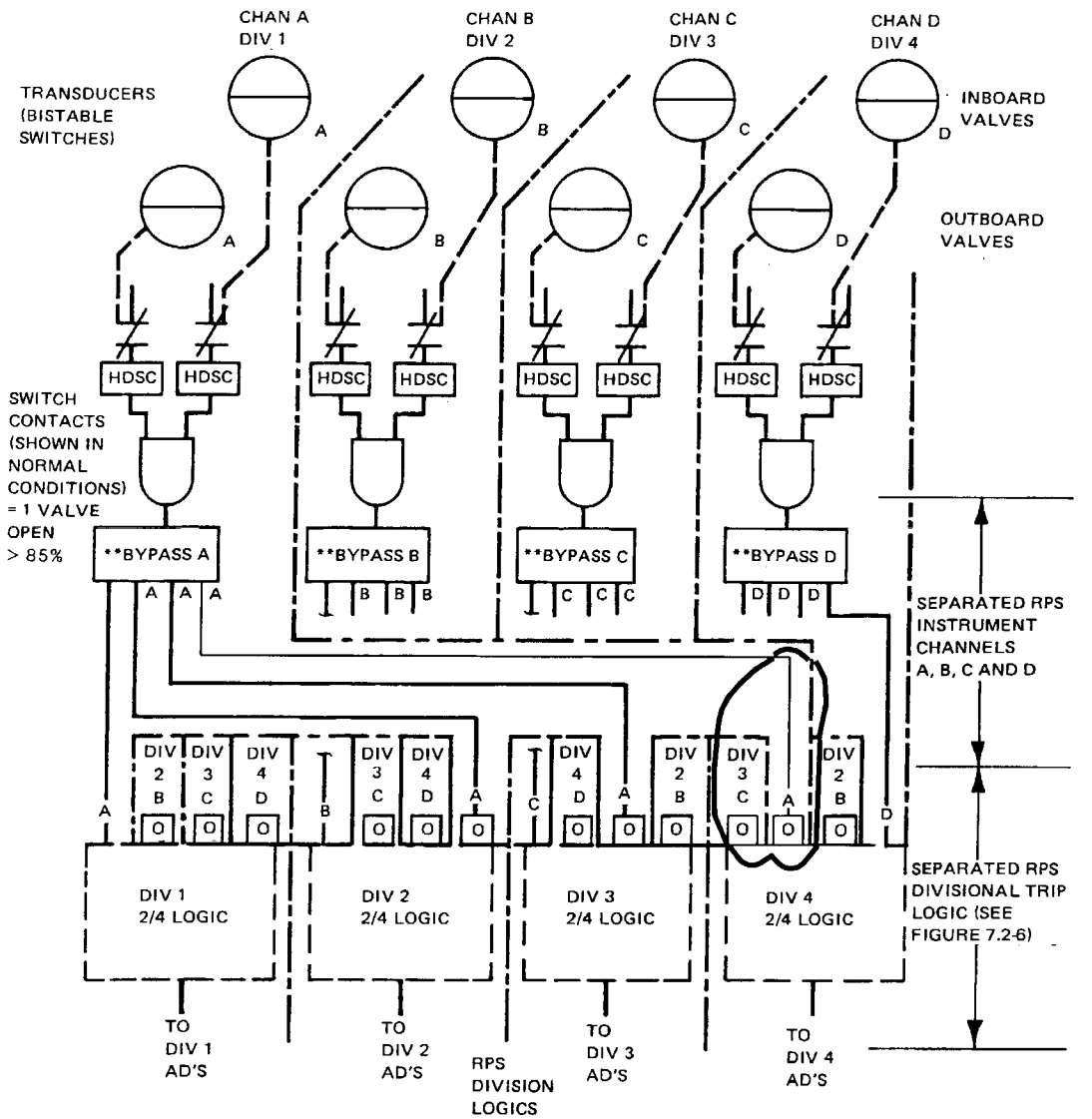

NOTE: THE LOGIC FOR THE MSIV CLOSURE TRIP IS ARRANGED SO THAT ANY ONE OF THE FOUR MAIN STEAM LINES CAN BE CLOSED WITHOUT SCRAMMING THE REACTOR PROVIDED THE LOAD IS REDUCED TO LIMIT REACTOR PRESSURE AND STEAM FLOW.

HDSC = HIGH VOLTAGE DIGITAL SIGNAL CONDITIONER (OPTICALLY COUPLED BUT NOT PHYSICALLY ISOLATED)

AD = ACTUATION DEVICES

O = OPTICAL ISOLATOR

DIVISIONAL BOUNDARIES

** BYPASS LIMITED TO ONE DIVISION AT A TIME

CLINTON POWER STATION
UPDATED SAFETY ANALYSIS REPORT

FIGURE 7.2-8
TYPICAL CONFIGURATION FOR MSIV
CLOSURE REACTOR TRIP
COINCIDENT LOGIC

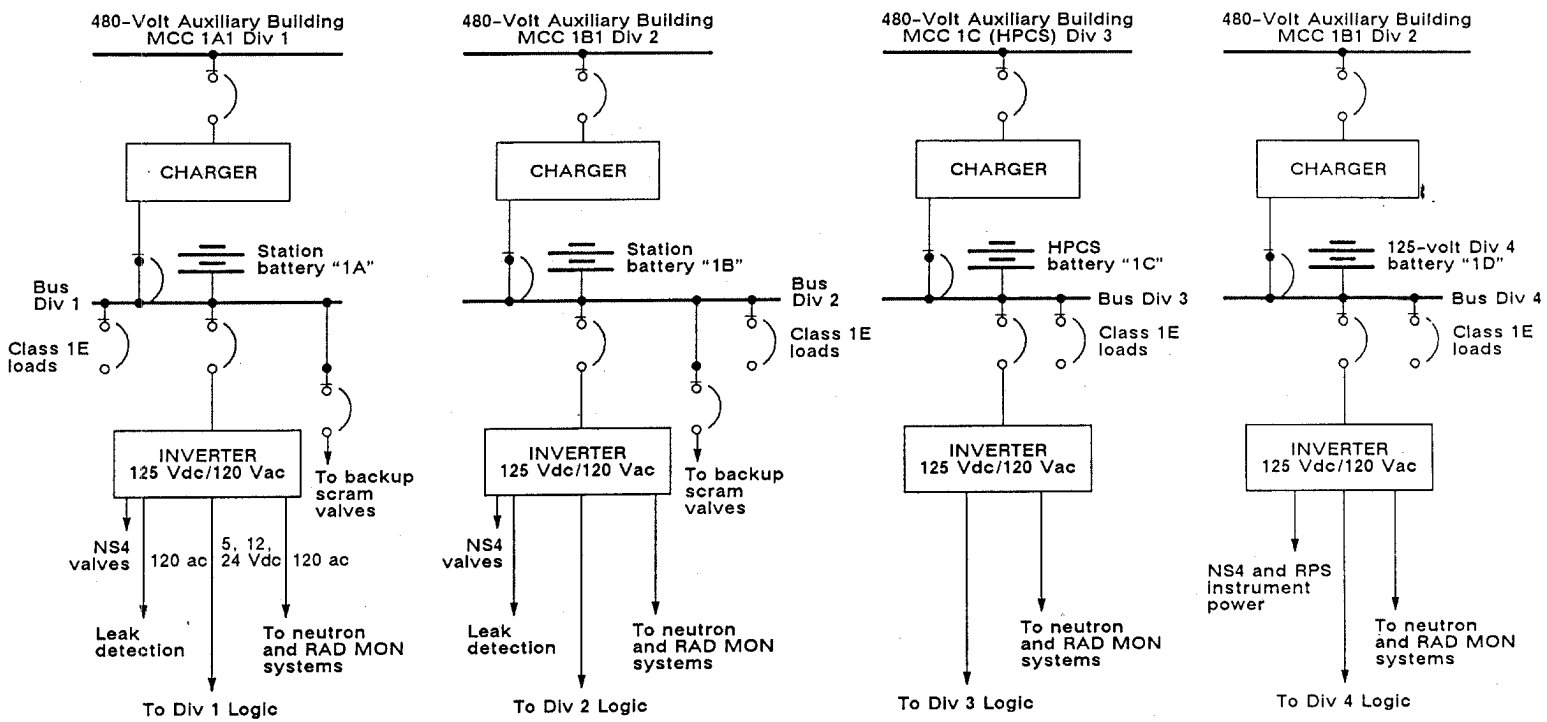

6639-1 1-86 KPS

CLINTON POWER STATION
UPDATED SAFETY ANALYSIS REPORT

FIGURE 7.2-9

NSPS POWER SUPPLY SCHEME

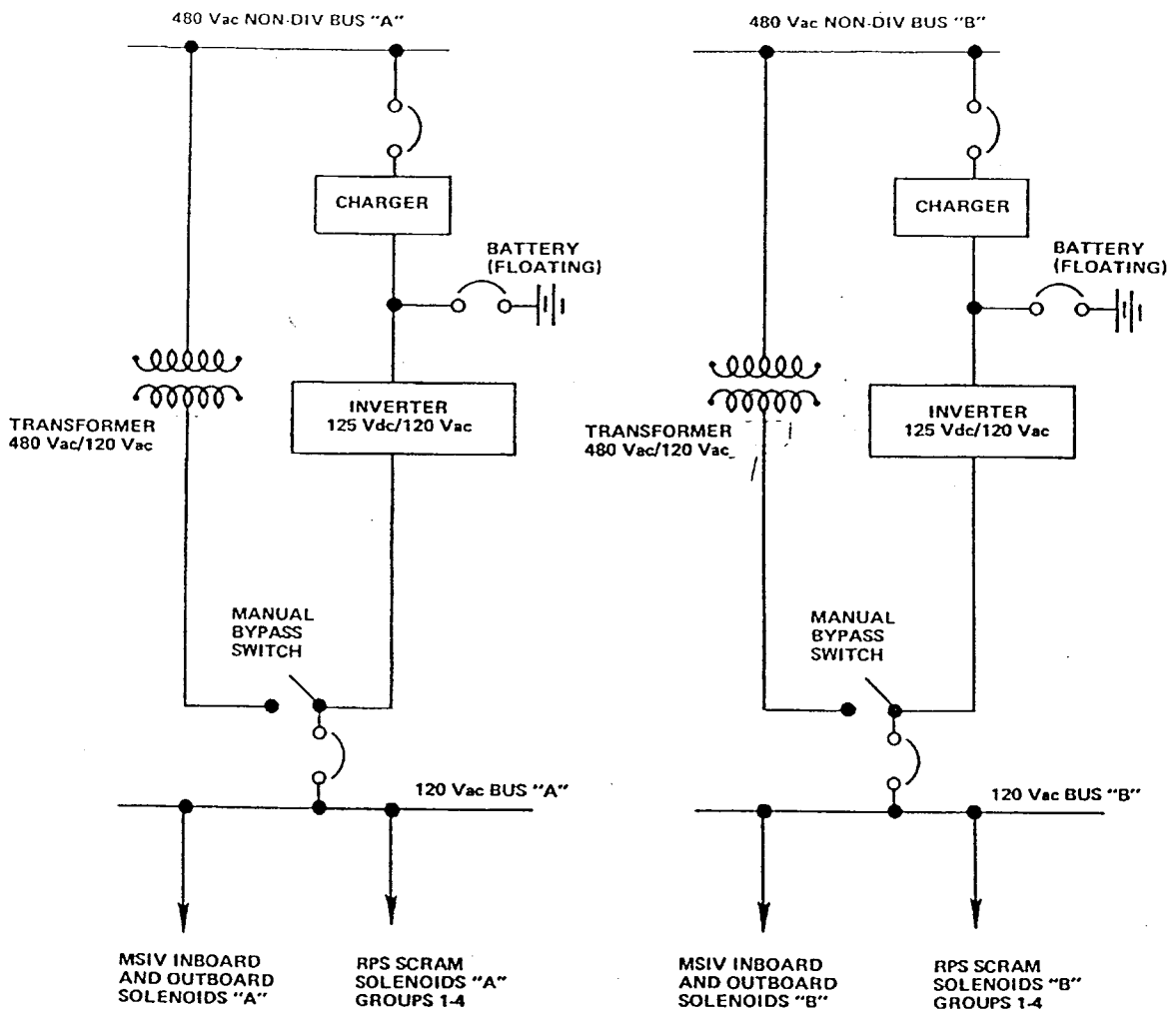

Figure 7.2-10 RPS and NSSS (MSIV) Control Power Supply Scheme

FIGURE 7.3-1

HAS BEEN DELETED

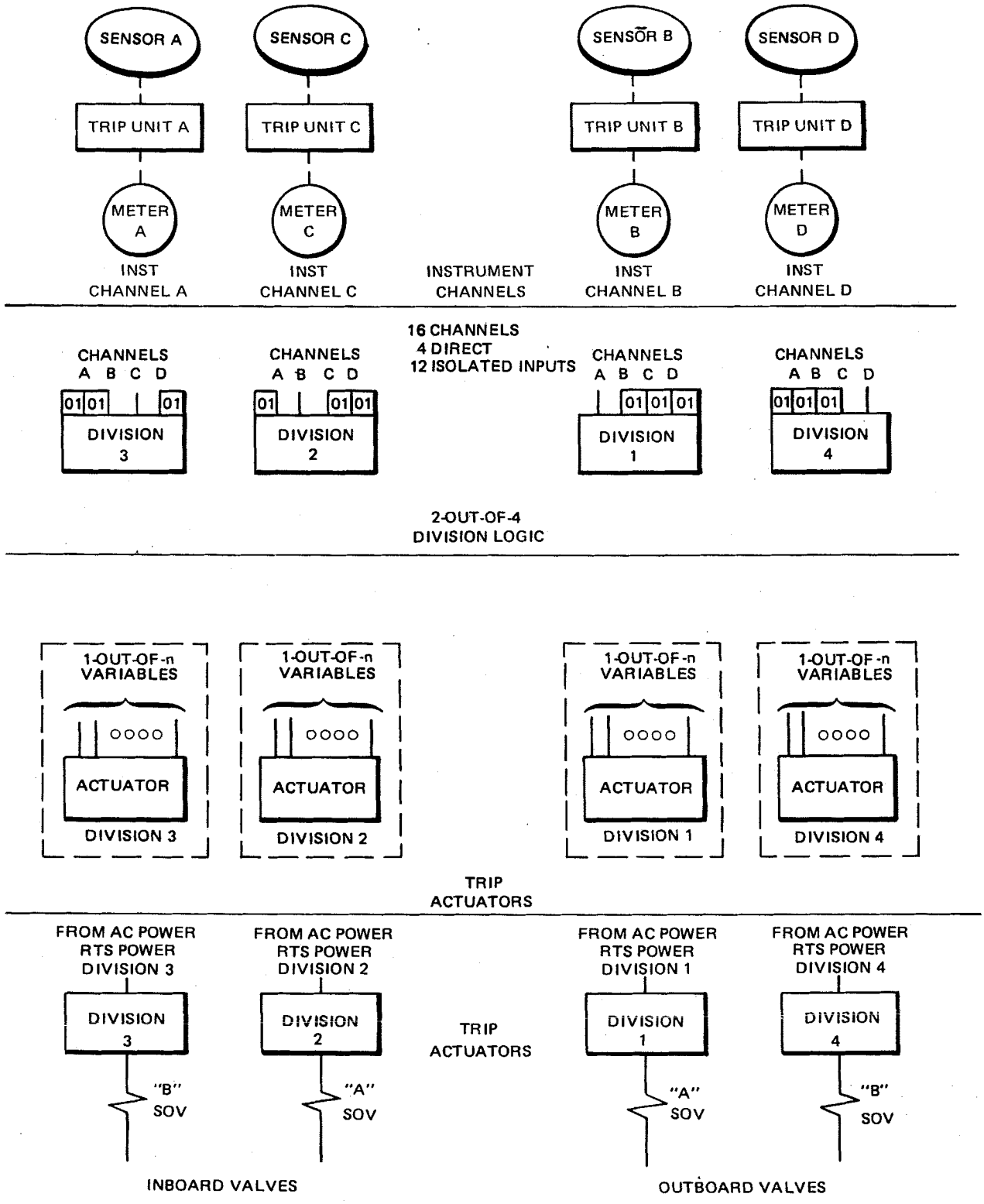

Figure 7.3-2. Typical Isolation Control System for Main Steamline Isolation Valves

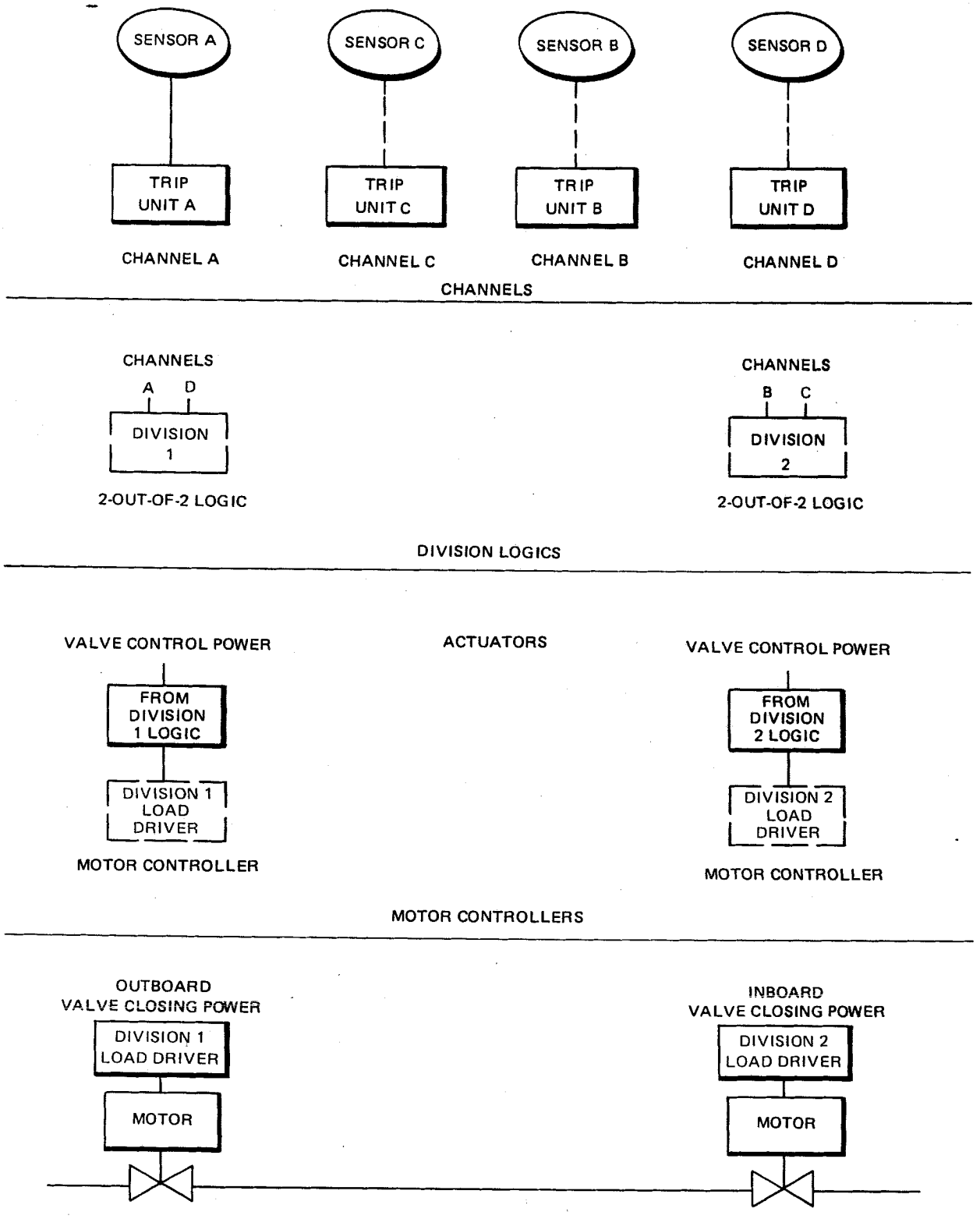

Figure 7.3-3. Typical Isolation Control System Using Motor-Operated Valves

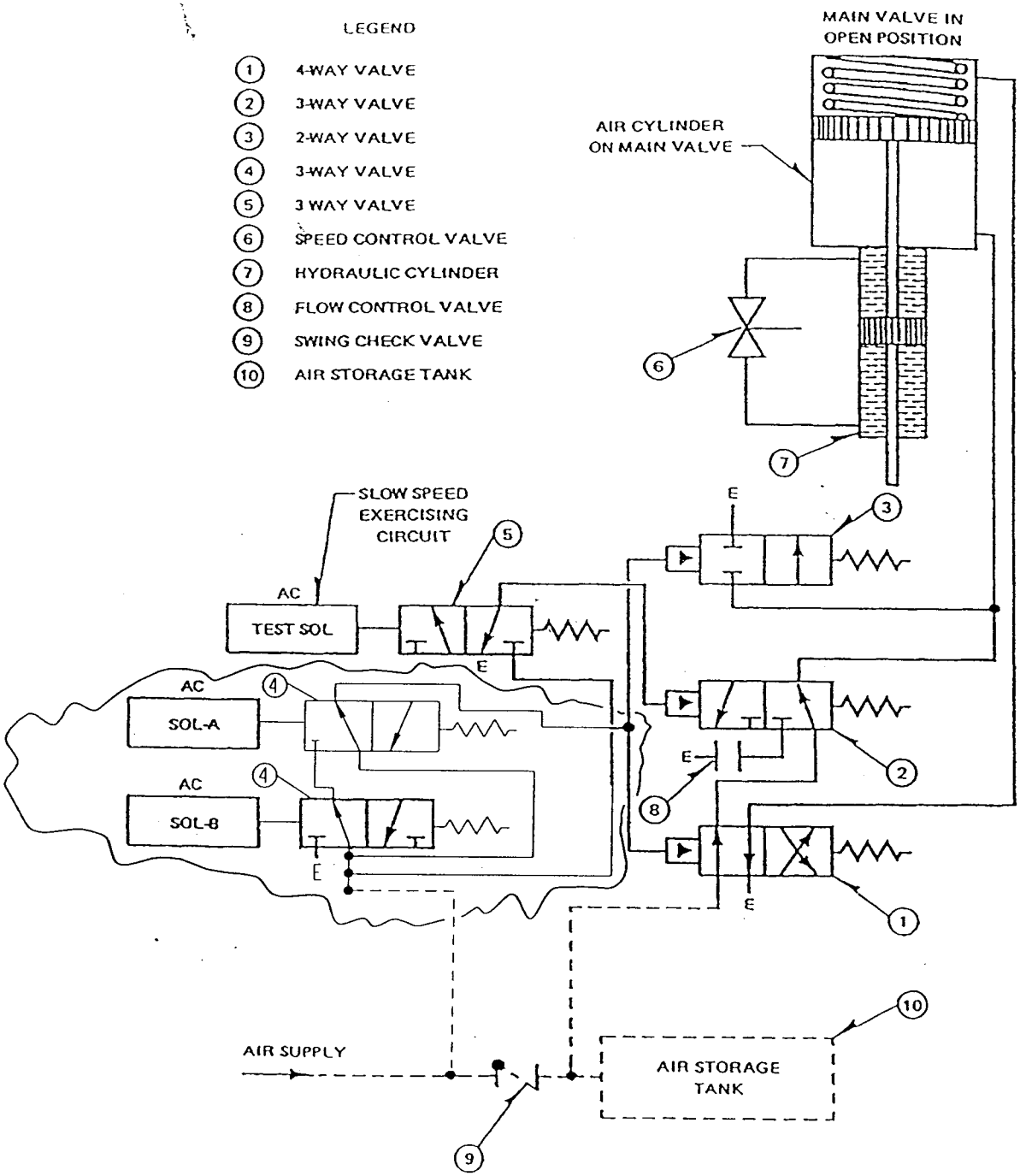

Figure 7 3-4 Main Steamline Isolation Valve (Schematic)

FIGURES 7.3-5 AND 7.3-6

HAVE BEEN DELETED

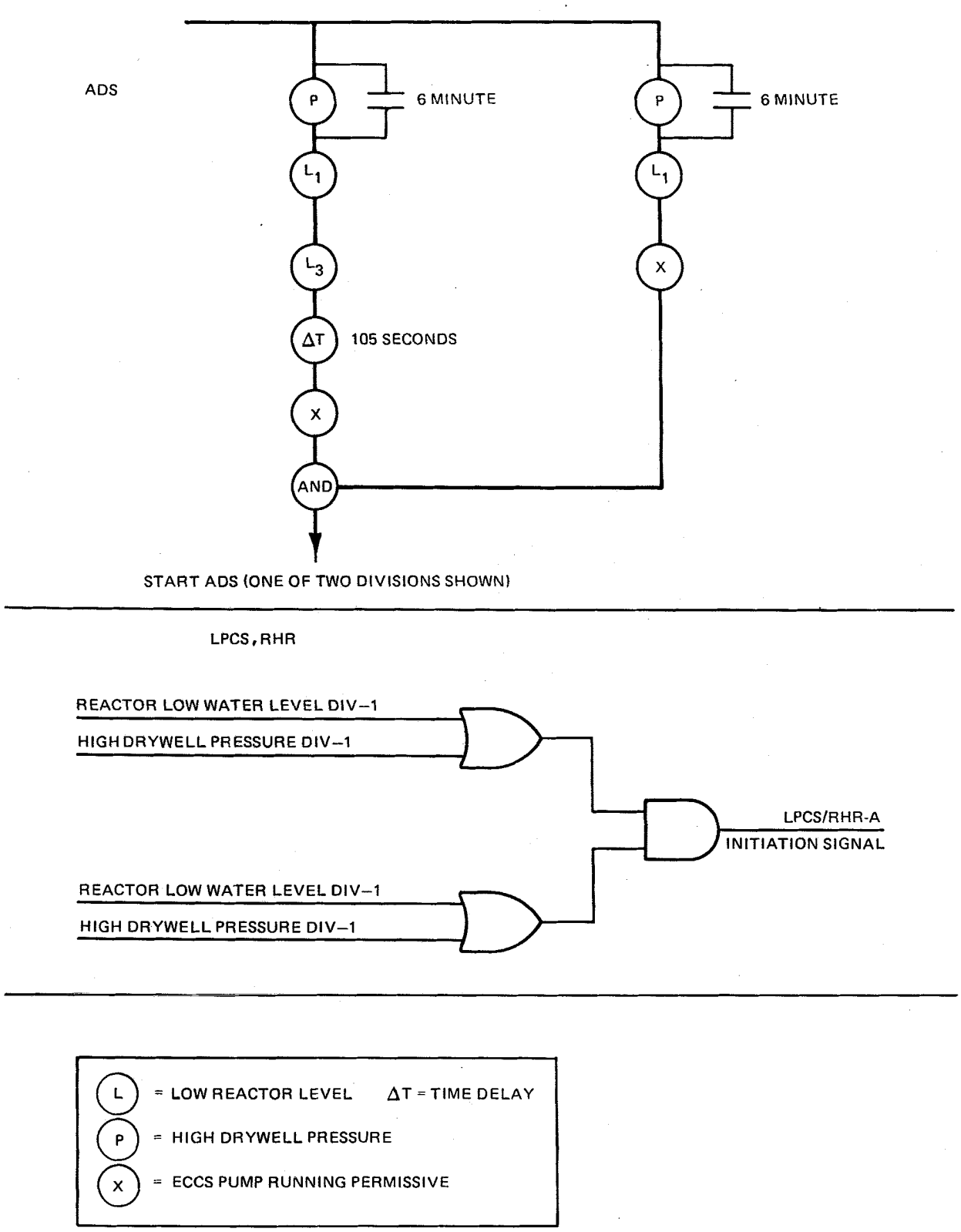

Figure 7.3.7 INITIATION LOGIC – ADS, LPCS, RHR-A

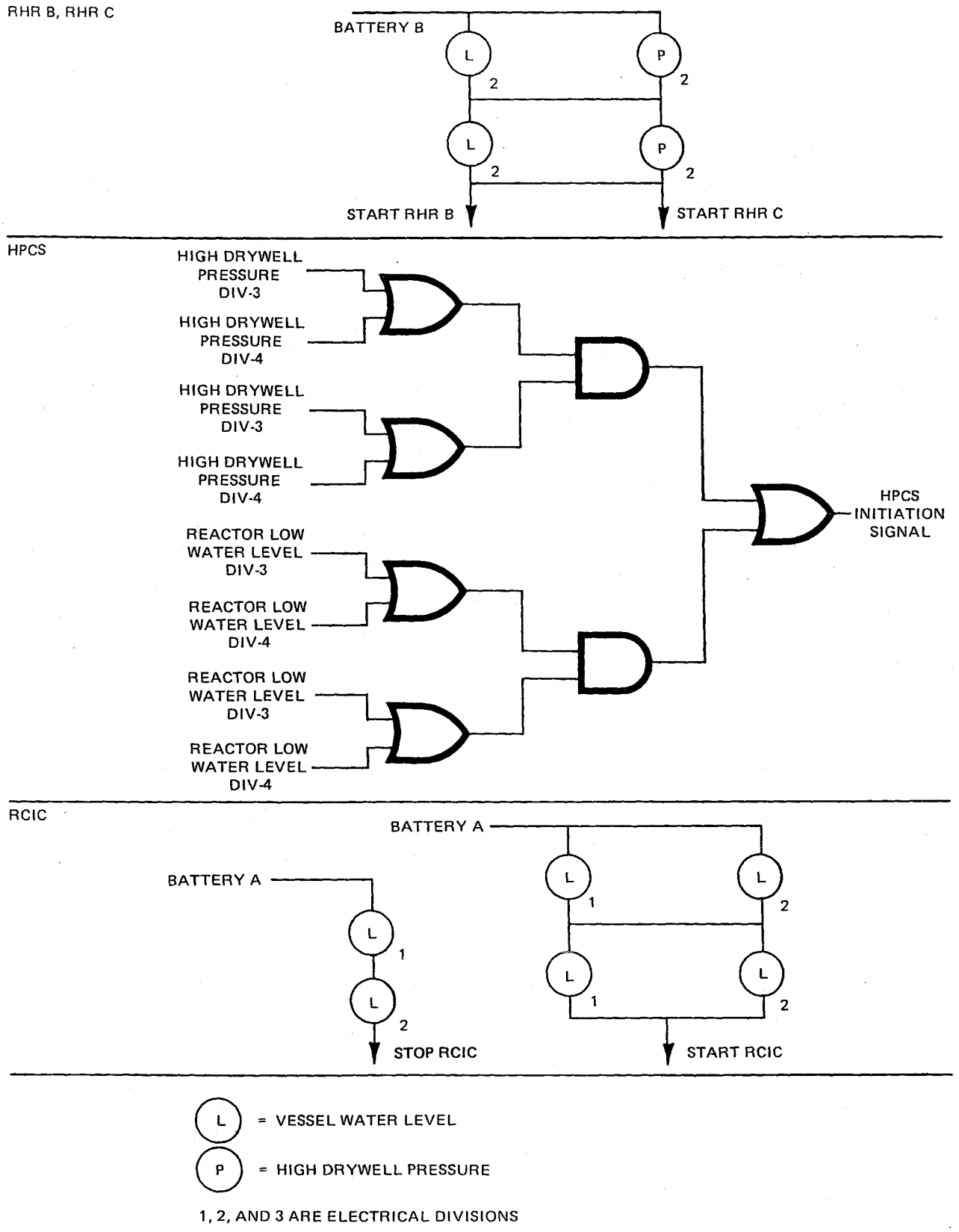

Figure 7.3-8 Initiation Logic - RHR B and C, HPCS, RCIC

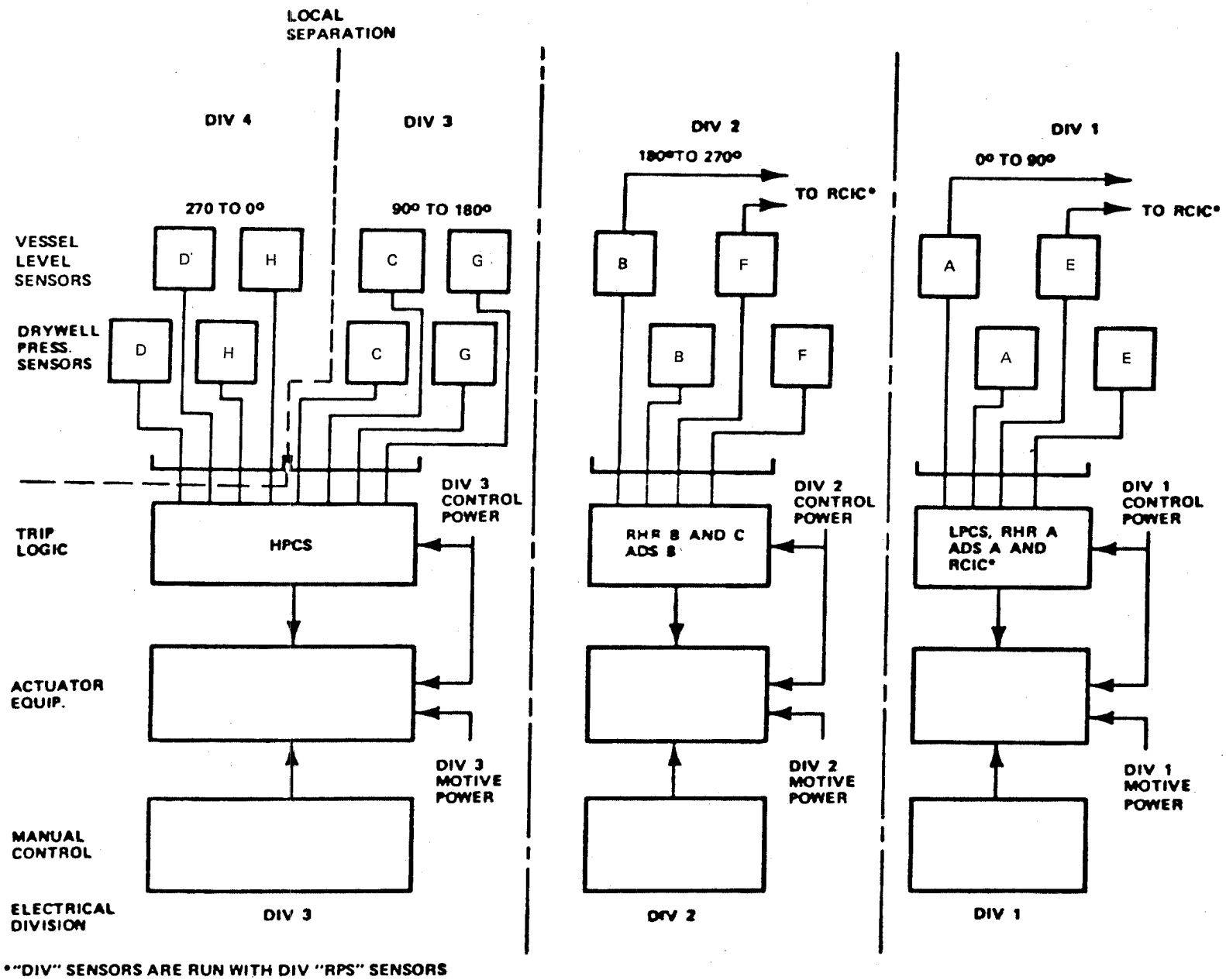

Figure 7.3-9 Emergency Core Cooling System (ECCS) Separation Scheme

FIGURES 7.4-1 THROUGH 7.4-4

HAVE BEEN DELETED

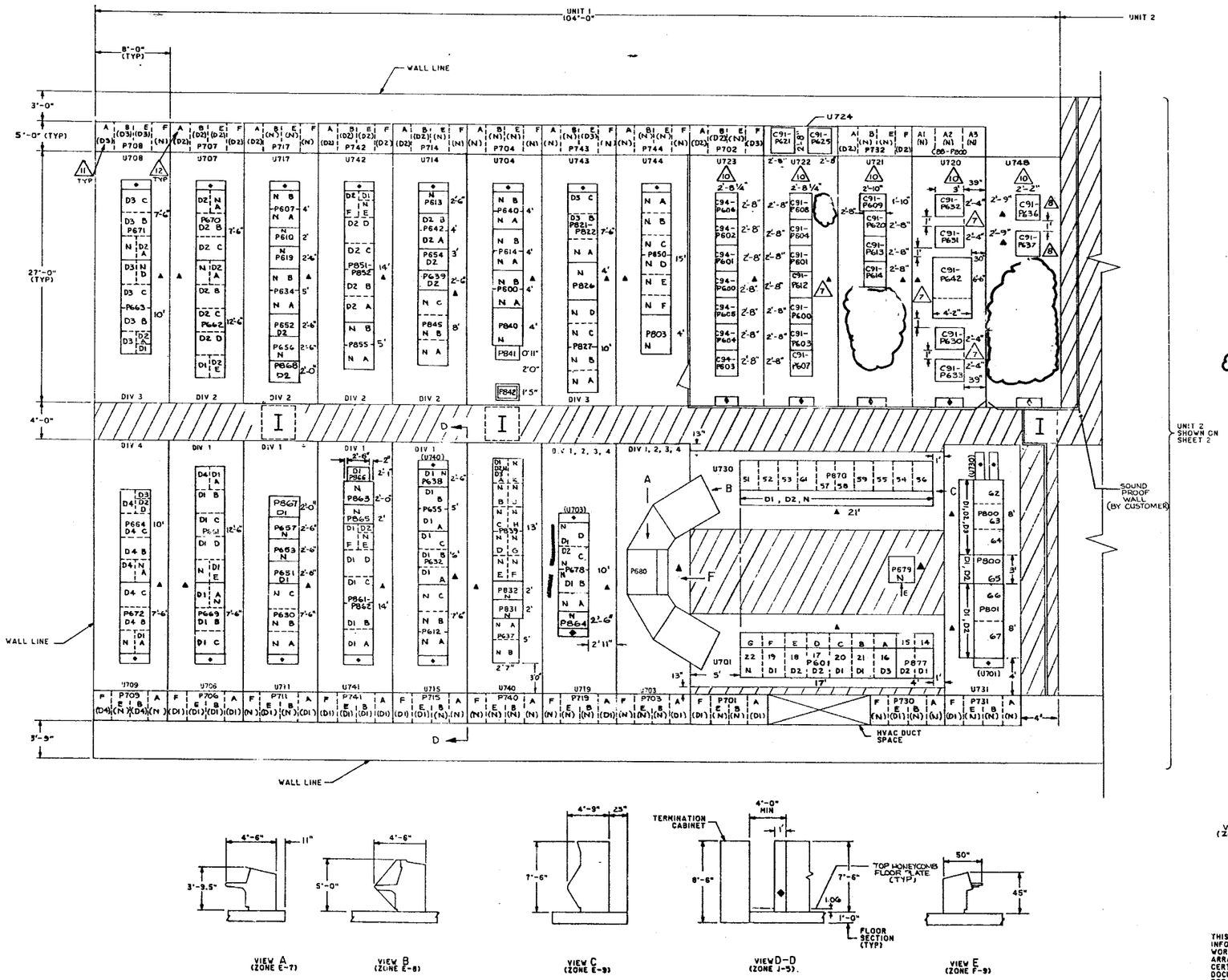

NOTES:

1. UNLESS OTHERWISE SPECIFIED, ALL DESIGNATIONS ARE UNDERSTOOD TO BE PREFIXED BY H13- (IE H13-P601).
2. UNLESS OTHERWISE SPECIFIED, ALL PANELS ARE 3'-0" DEEP EXCEPT THE COMPUTER PANELS
3. CROSS HATCHED FILLER FLOOR SECTIONS TO BE FURNISHED BY GENERAL ELECTRIC.
4. FOR TERMINATION CABINET & FLOOR SECTION DETAILS, SEE 8SIE765.
5. UNLESS OTHERWISE SPECIFIED, ALL FLOOR SECTIONS & TERMINATION CABINETS HAVE NON-DIVISIONAL WIRING SECTIONS.

6. ▲ INDICATES FRONT OF PANEL.

7. C91-P630 CONTAINS : C91-R625
   C91-P631 CONTAINS : C91-R626
   C91-P632 CONTAINS : C91-R627
   C91-P633 CONTAINS : C91-R628
   C91-P642 CONTAINS : C91-K605, C91-R608, C91-R615
   C91-P612 CONTAINS : C91-K612, C91-K613, C91-K614

8. FOR USE WITH UNIT 1

10. ALL COMPUTER EQUIPMENT IS NON-DIVISIONAL.

11. DIVISIONAL ASSIGNMENTS ARE AS FOLLOWS:
    D1 = DIVISION 1
    D2 = DIVISION 2
    D3 = DIVISION 3
    D4 = DIVISION 4
    N = NON-DIVISIONAL

12. LETTER DESIGNATES ARBITRARY BAY ASSIGNMENT USED FOR ROUTING. PANELS WITHOUT LETTERS ARE SINGLE BAY CABINETS.

13. ◆ INDICATES FIRE CONTROL PANEL. PANEL MODULE NUMBER IN PARENTHESIS "(U701)" CORRESPONDS TO THE NUMBER OF THE PANEL MODULE THAT IT WILL SERVE.

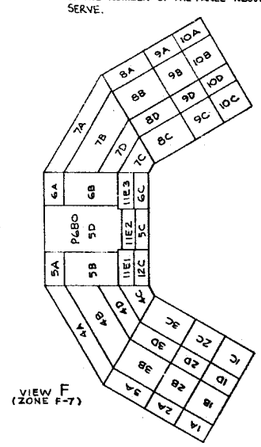

VIEW F (ZONE F-7)

VIEW A (ZONE E-7) VIEW B (ZONE E-8) VIEW C (ZONE E-9) VIEW D-D (ZONE J-5) VIEW E (ZONE F-9)

THIS DOCUMENT DEFINES MAJOR INTERFACE INFORMATION NECESSARY FOR THE PREPARATION OF WORKING DRAWINGS FOR PLANT ELECTRICAL CABLE ARRANGEMENT DESIGN. GENERAL ELECTRIC CERTIFIES THE INTERFACE DATA GIVEN ON THIS DOCUMENT TO BE CORRECT AND SUITABLE FOR ESTABLISHING MAJOR PLANT DESIGN.

CLINTON POWER STATION
UPDATED SAFETY ANALYSIS REPORT

FIGURE 7.5-1

CONTROL ROOM PANELS WITH SOLID-STATE SAFETY SYSTEMS

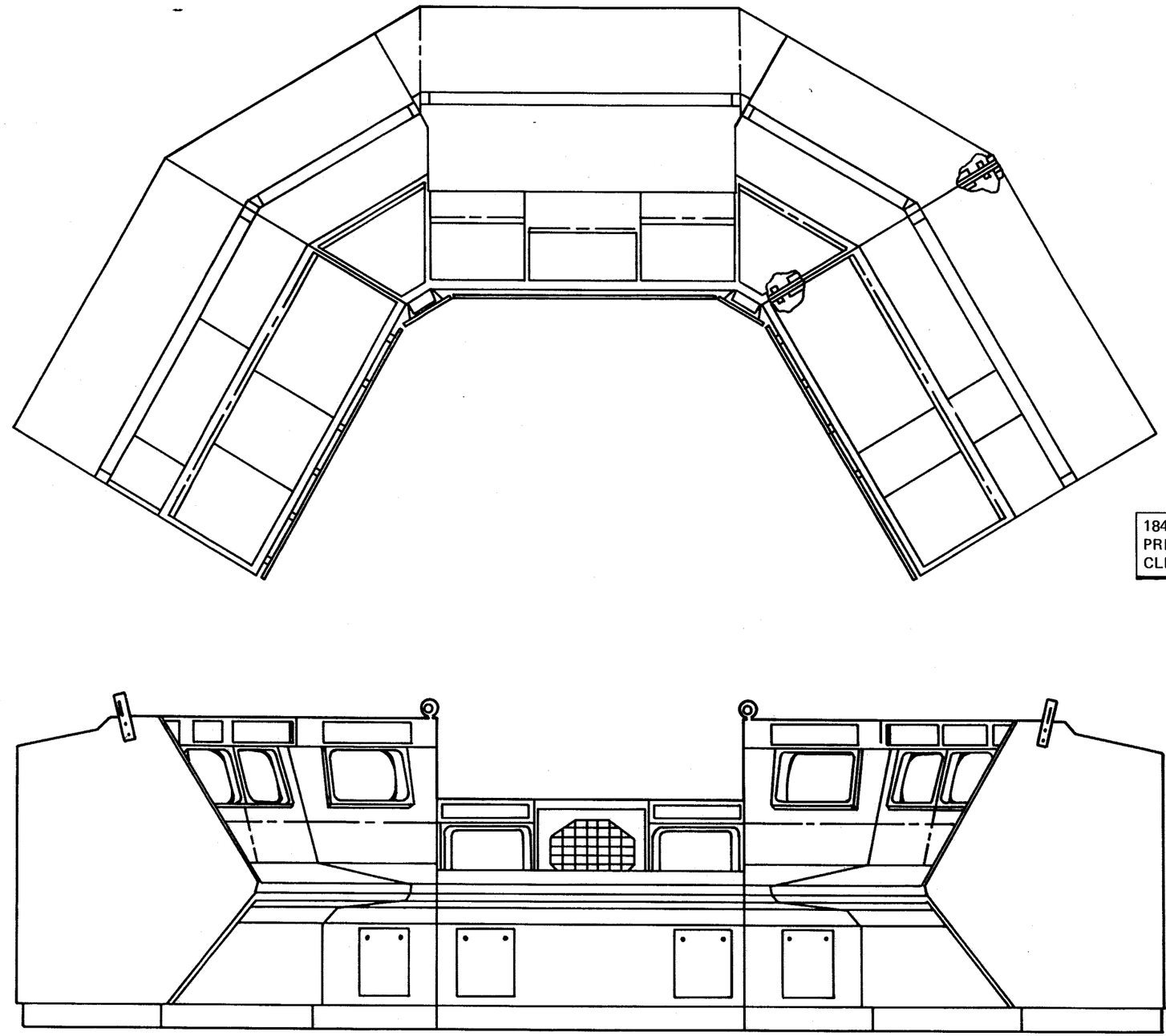

FIGURE 7.5-2. OUTLINE – PRINCIPLE PLANT CONTROL CONSOLE

Figures 7.5-3 through 7.5-5
Deleted

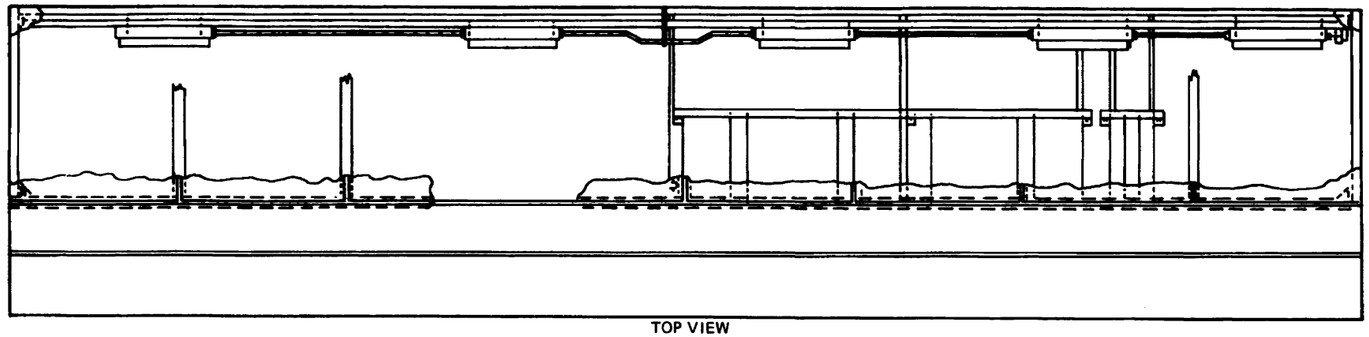

TOP VIEW

WITH ENCLOSURE TOP
COVER PARTIALLY REMOVED

915E113
BOP CONTROL BB P870

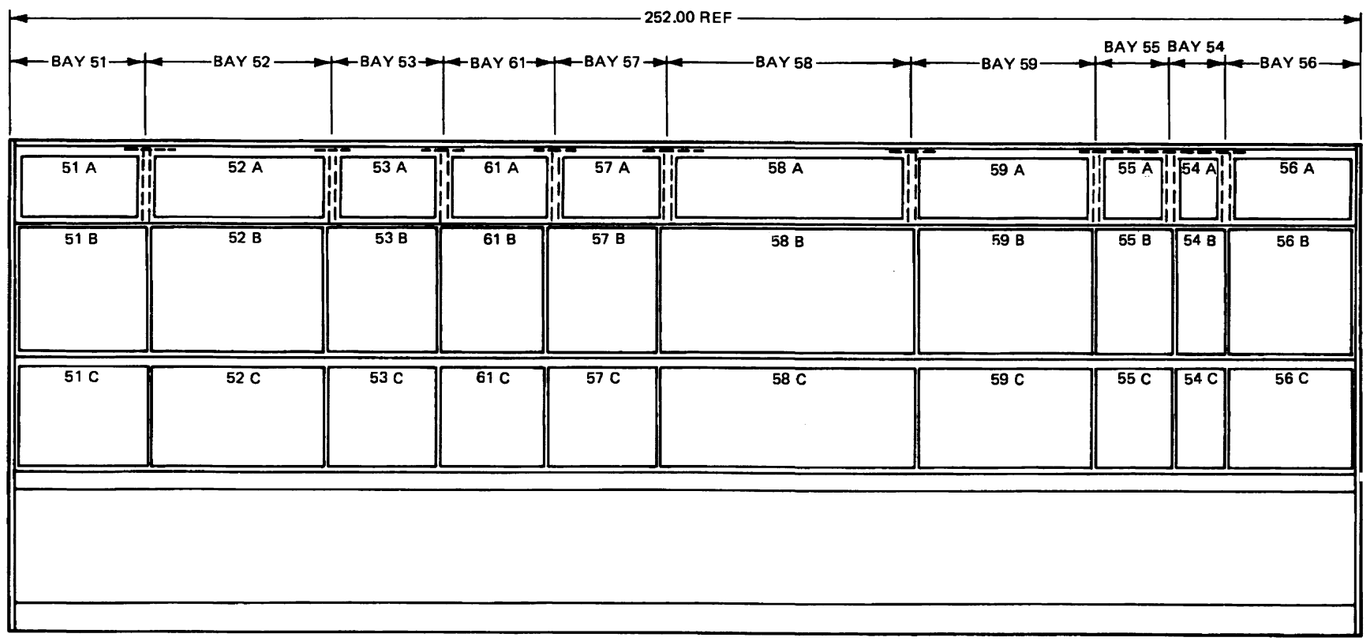

FRONT VIEW

CLINTON POWER STATION
UPDATED SAFETY ANALYSIS REPORT

FIGURE 7.5-6
OUTLINE OF
BALANCE OF PLANT BENCHBOARDS

SHEET 1 OF 4

REVISION 9
JANUARY 2001

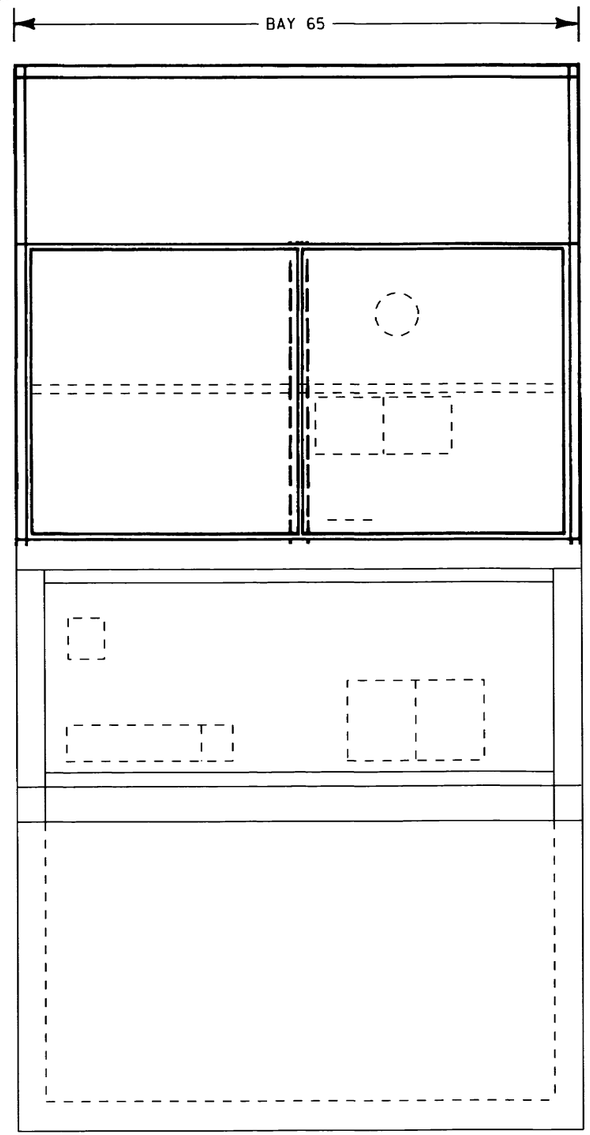

FRONT VIEW

14348N
BOP CONTROL PANEL P800
BAY 65

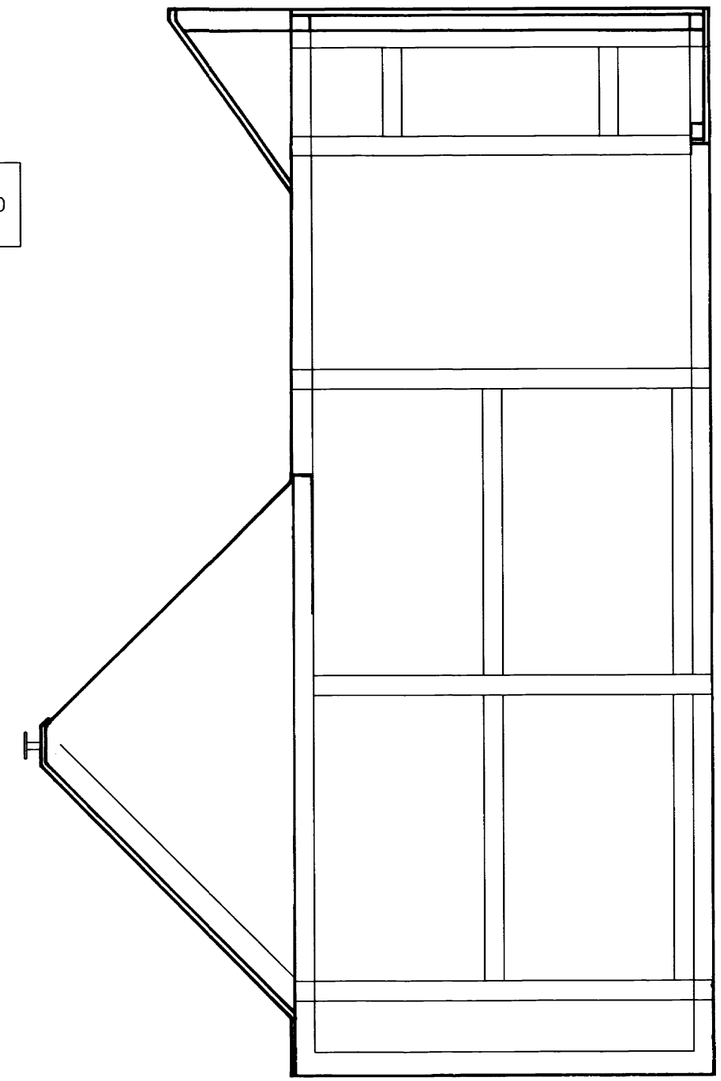

CLINTON POWER STATION
UPDATED SAFETY ANALYSIS REPORT

FIGURE 7.5-6

OUTLINE OF
BALANCE OF PLANT BENCHBOARDS
SHEET 2 OF 4

REVISION 9
JANUARY 2001

915E100
BOP CONTROL PANEL P800

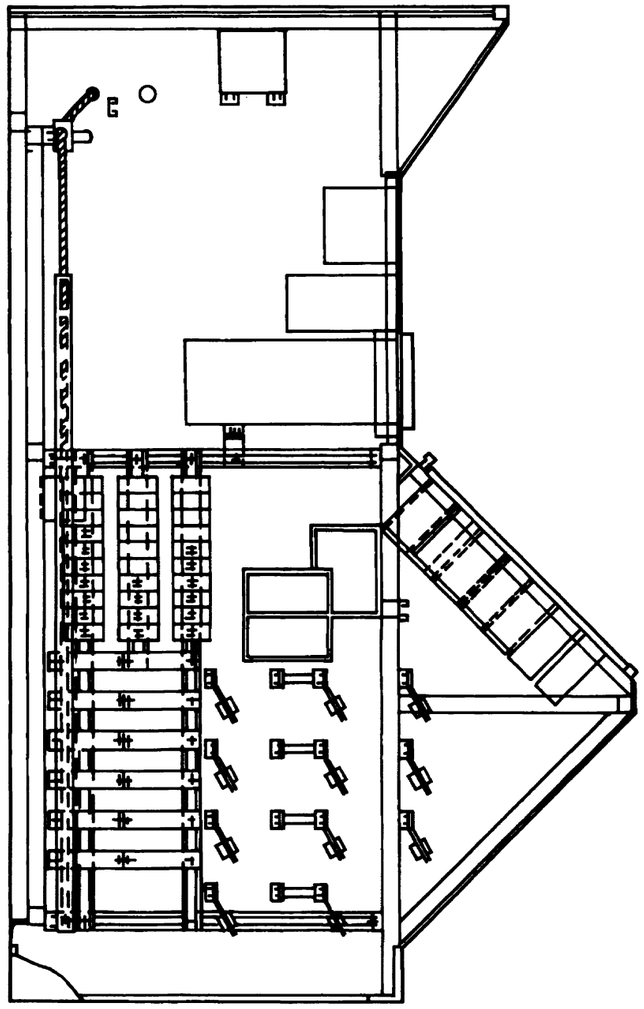

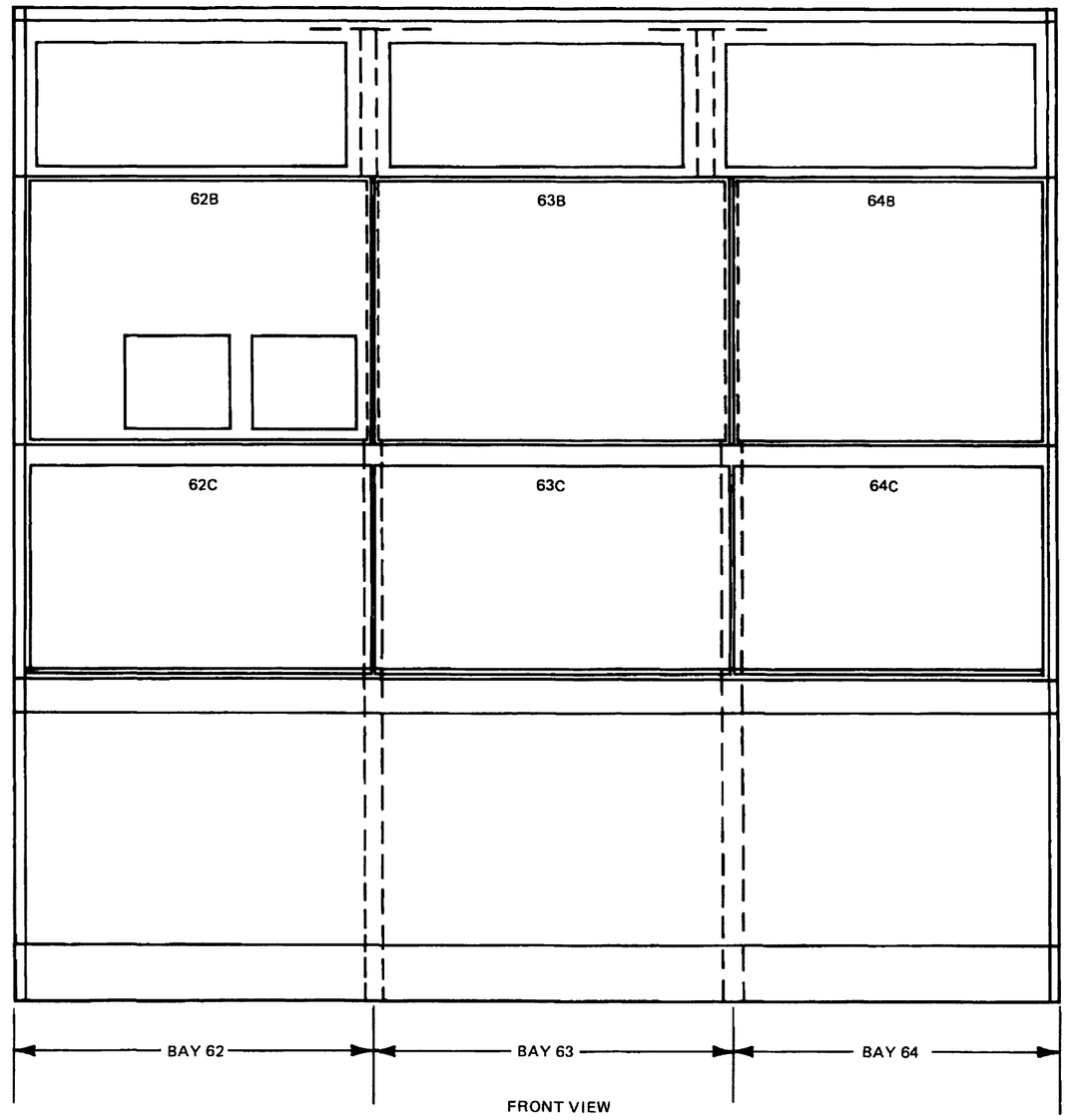

CLINTON POWER STATION
UPDATED SAFETY ANALYSIS REPORT

FIGURE 7.5-6

OUTLINE OF
BALANCE OF PLANT BENCHBOARDS
SHEET 3 OF 4

REVISION 9
JANUARY 2001

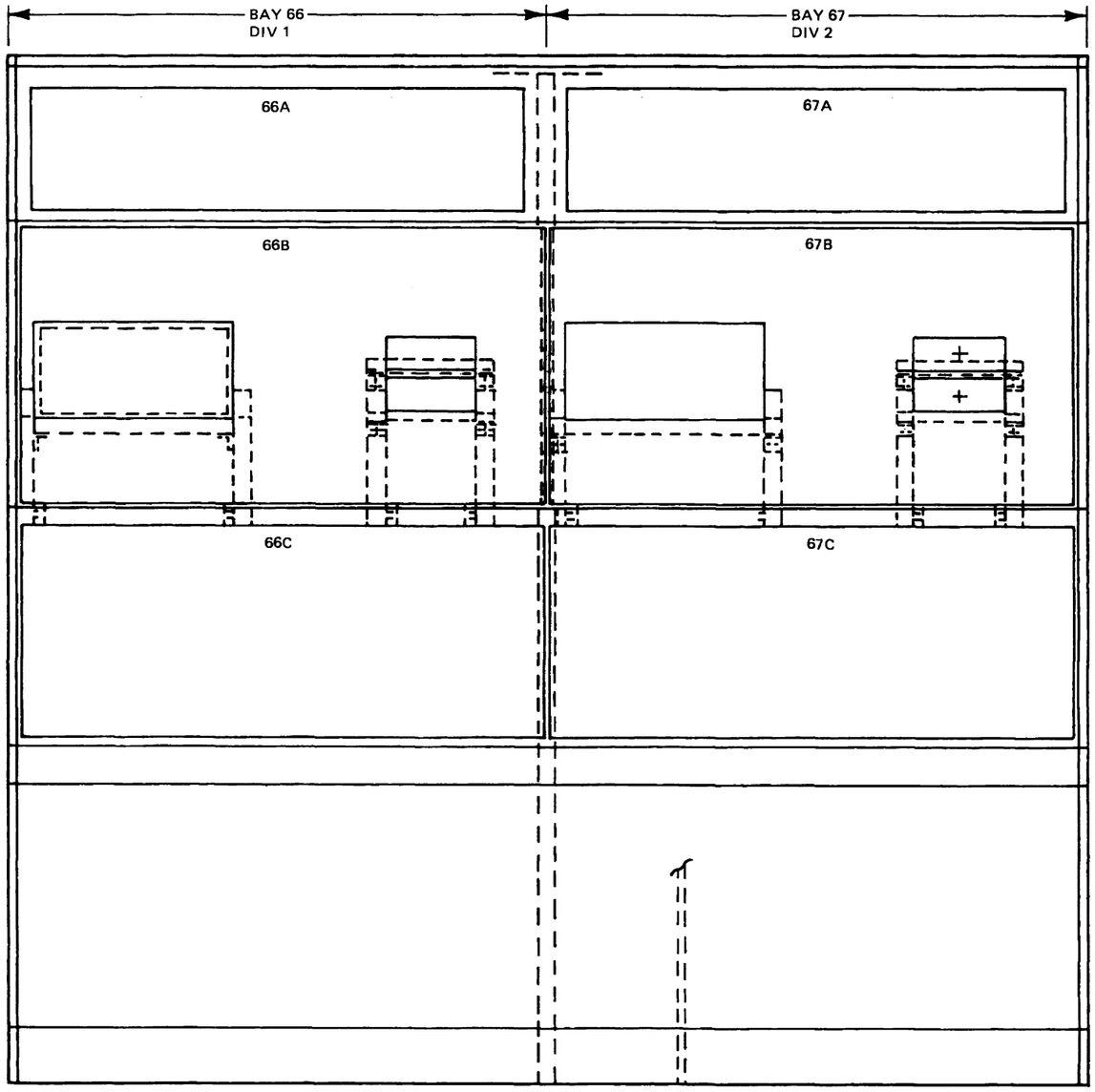

FRONT VIEW

915E101
BOP CONTROL BB P801

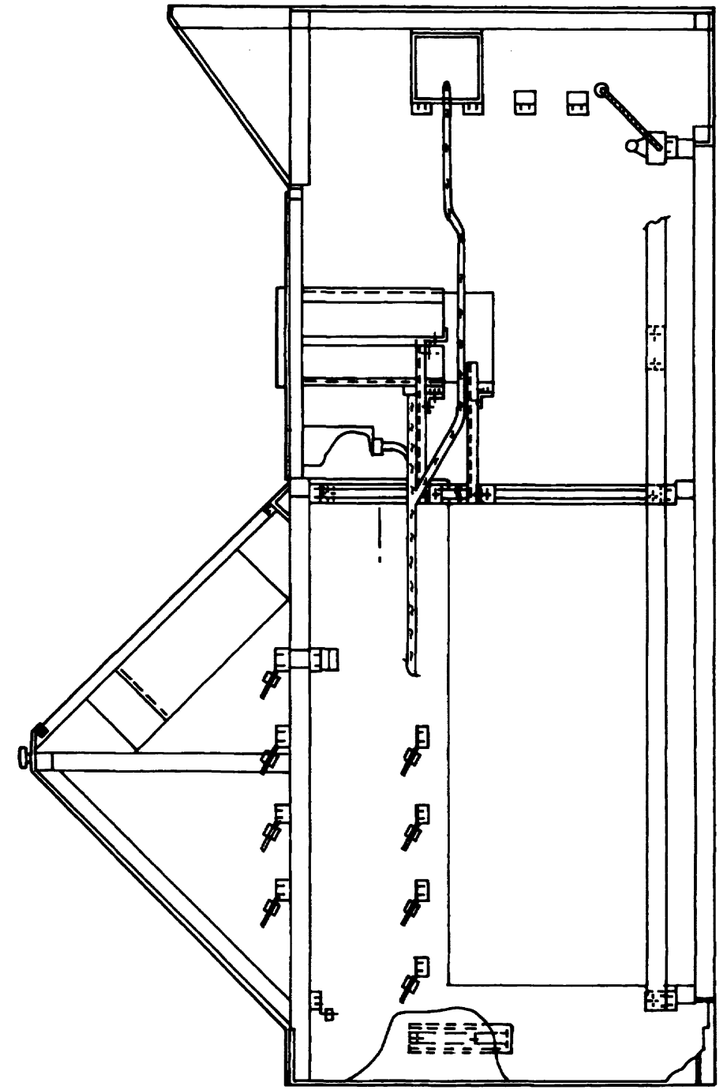

SIDE VIEW

CLINTON POWER STATION
UPDATED SAFETY ANALYSIS REPORT

FIGURE 7.5-6

OUTLINE OF
BALANCE OF PLANT BENCHBOARDS
SHEET 4 OF 4

FIGURES 7.5-7 THROUGH 7.5-9

HAVE BEEN DELETED

REVISION 9
JANUARY 2001

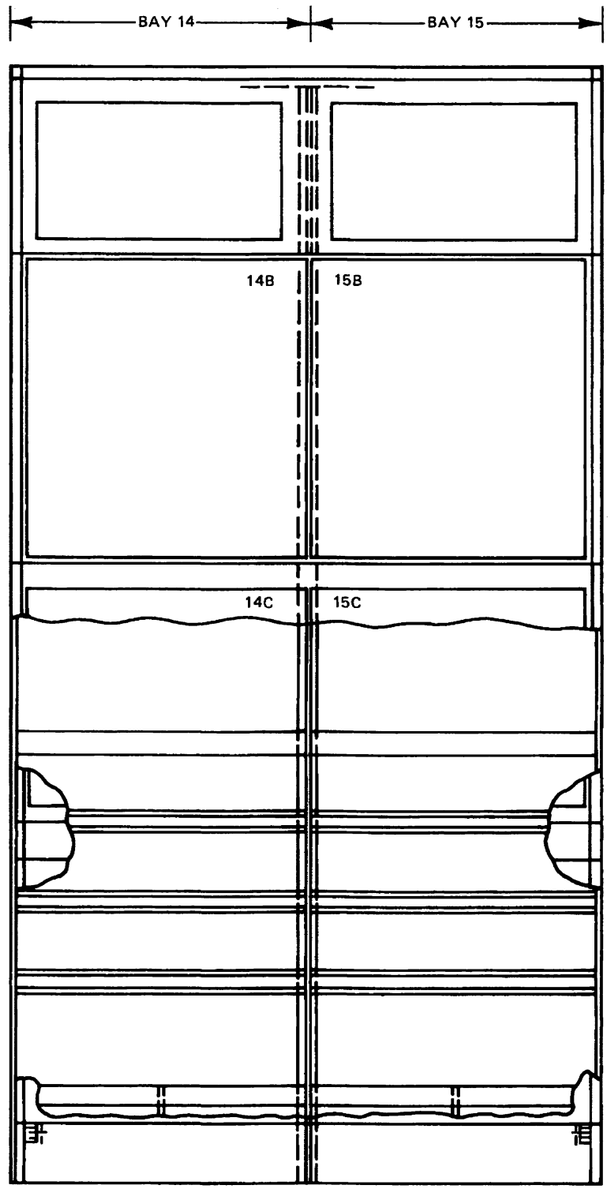

FRONT VIEW

915E114
DIESEL GENERATOR CONTROL PANEL
P877

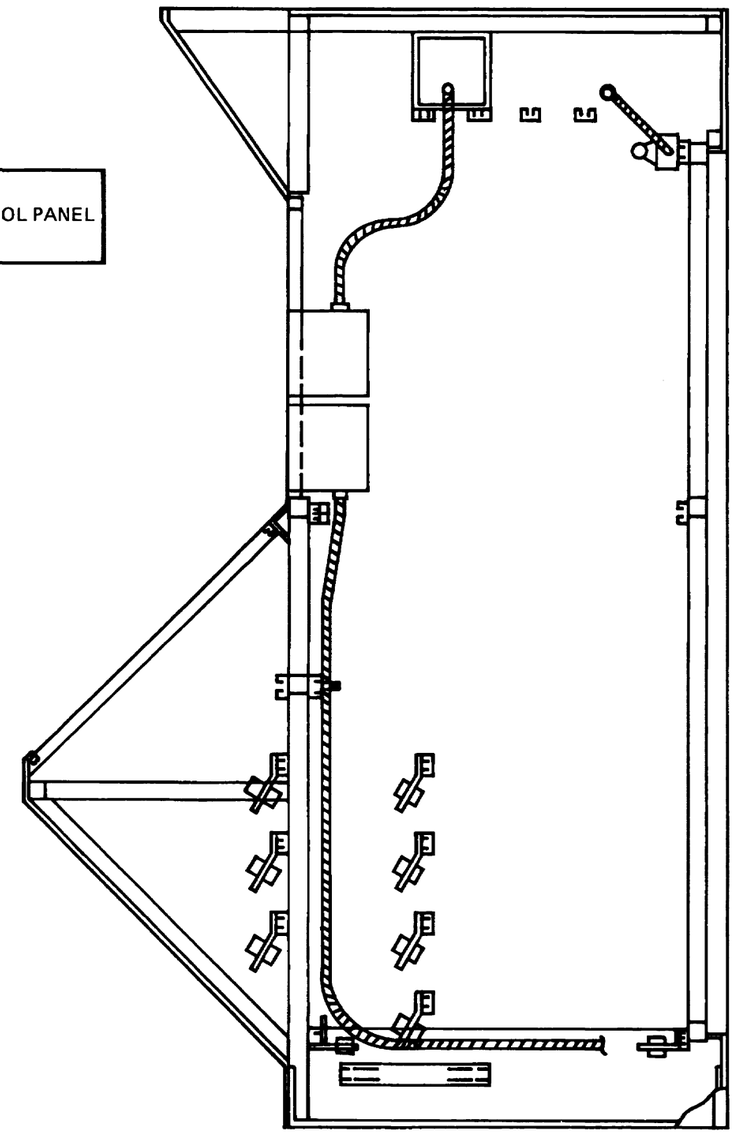

CLINTON POWER STATION
UPDATED SAFETY ANALYSIS REPORT

FIGURE 7.5-10

OUTLINE OF
DIESEL GENERATOR BENCHBOARD

Figures 7.6-1 through 7.6-9
Deleted

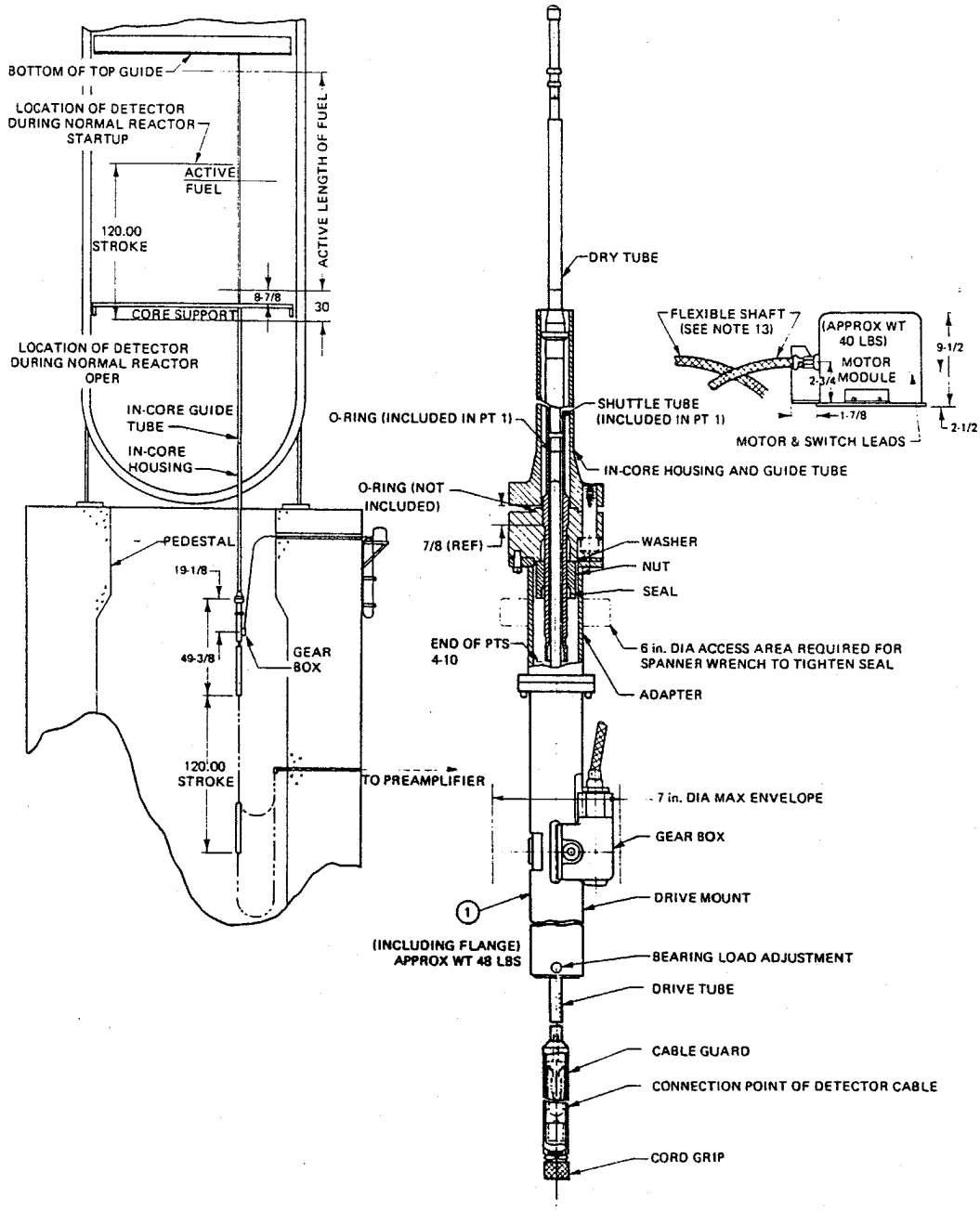

Figure 7.6-10. SRM/IRM Neutron Monitoring Unit

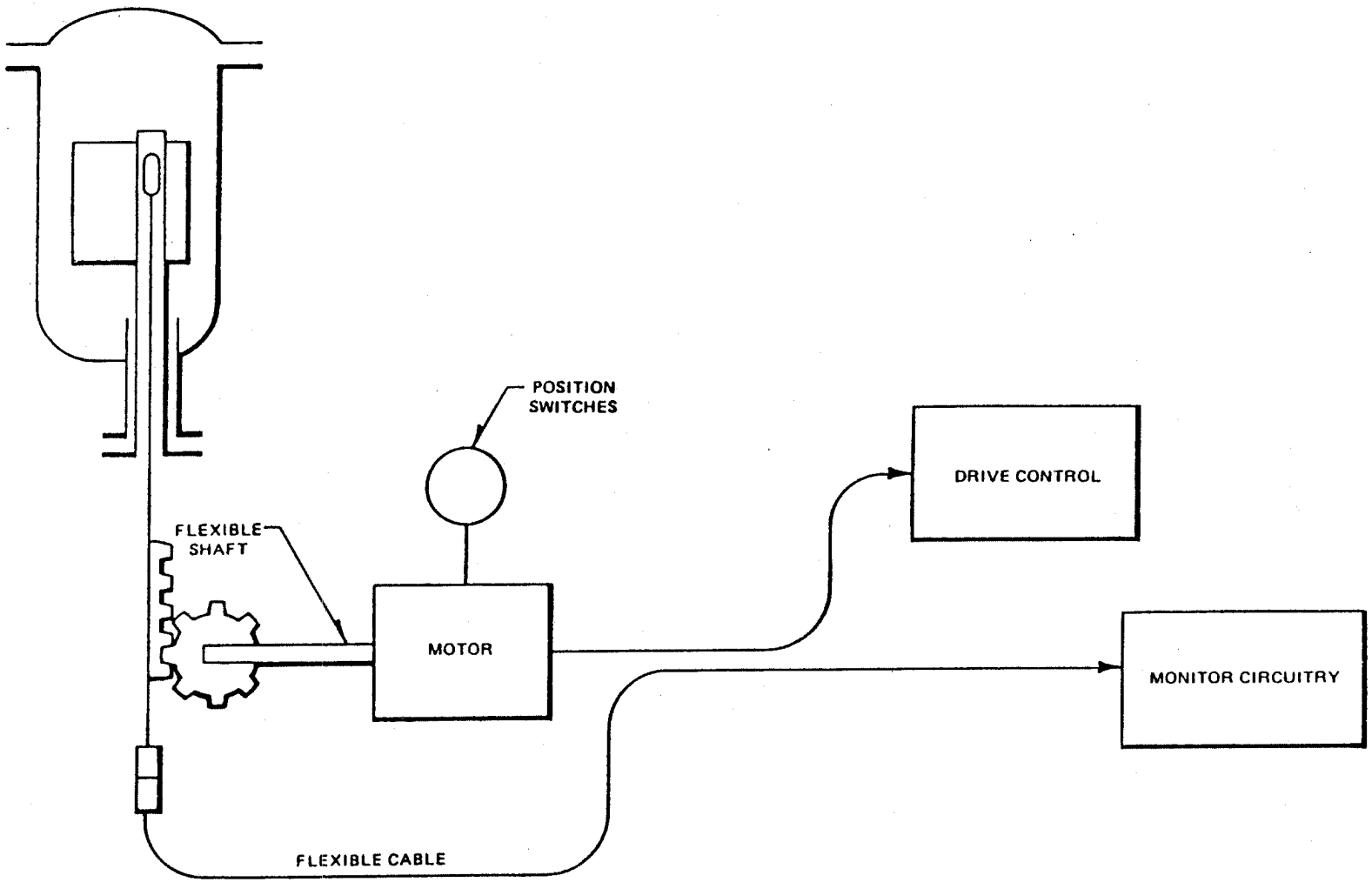

Figure 7.6-11. Detector Drive System Schematic

FIGURES 7.6-12 THROUGH 7.6-14

HAVE BEEN DELETED

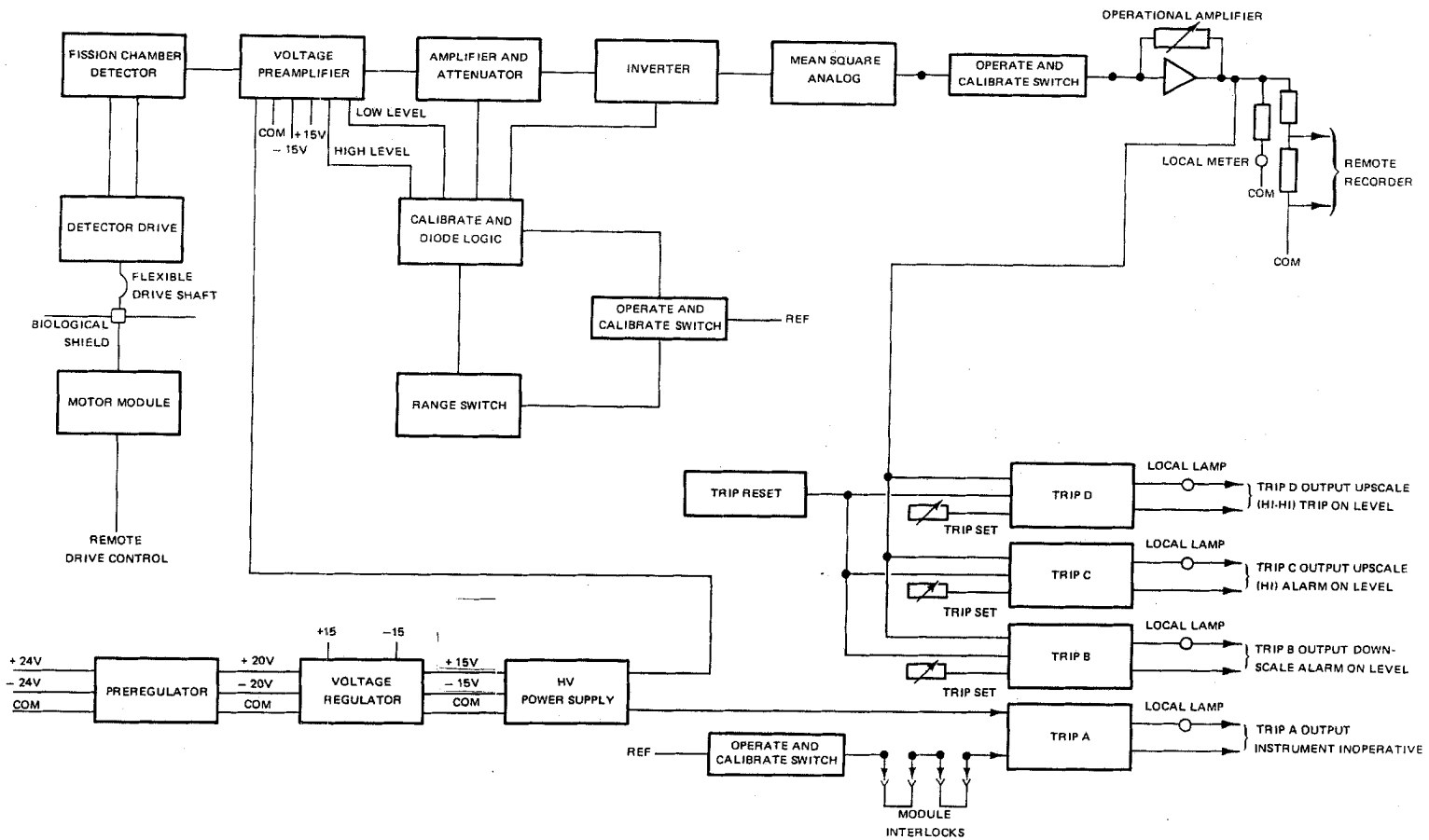

Figure 7.6-15. Functional Block Diagram of IRM Channel

FIGURE 7.6-16

HAS BEEN DELETED

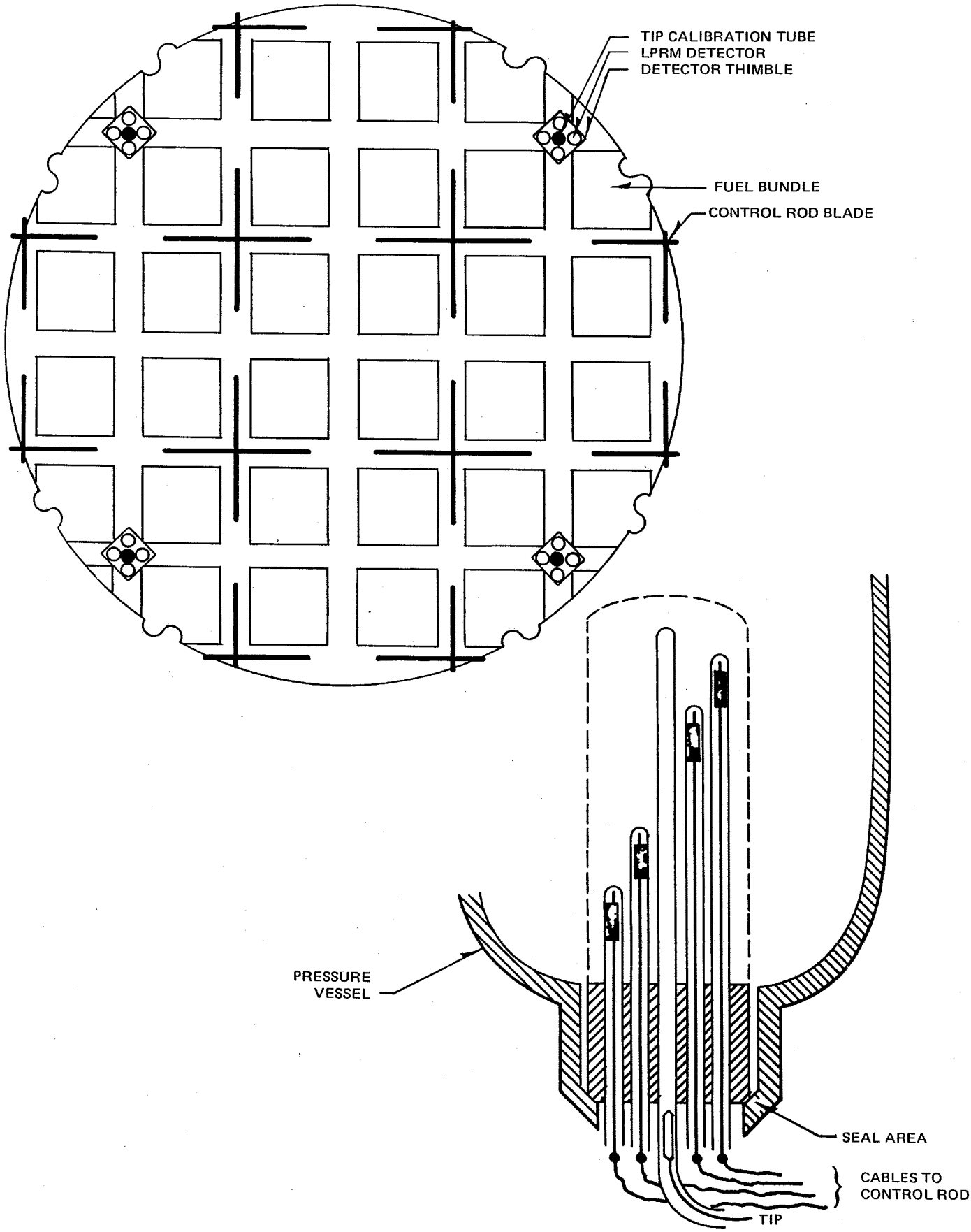

Figure 7.6-17. Power Range Monitor Detector Assembly Location

FIGURES 7.6-18 AND 7.6-19

HAVE BEEN DELETED

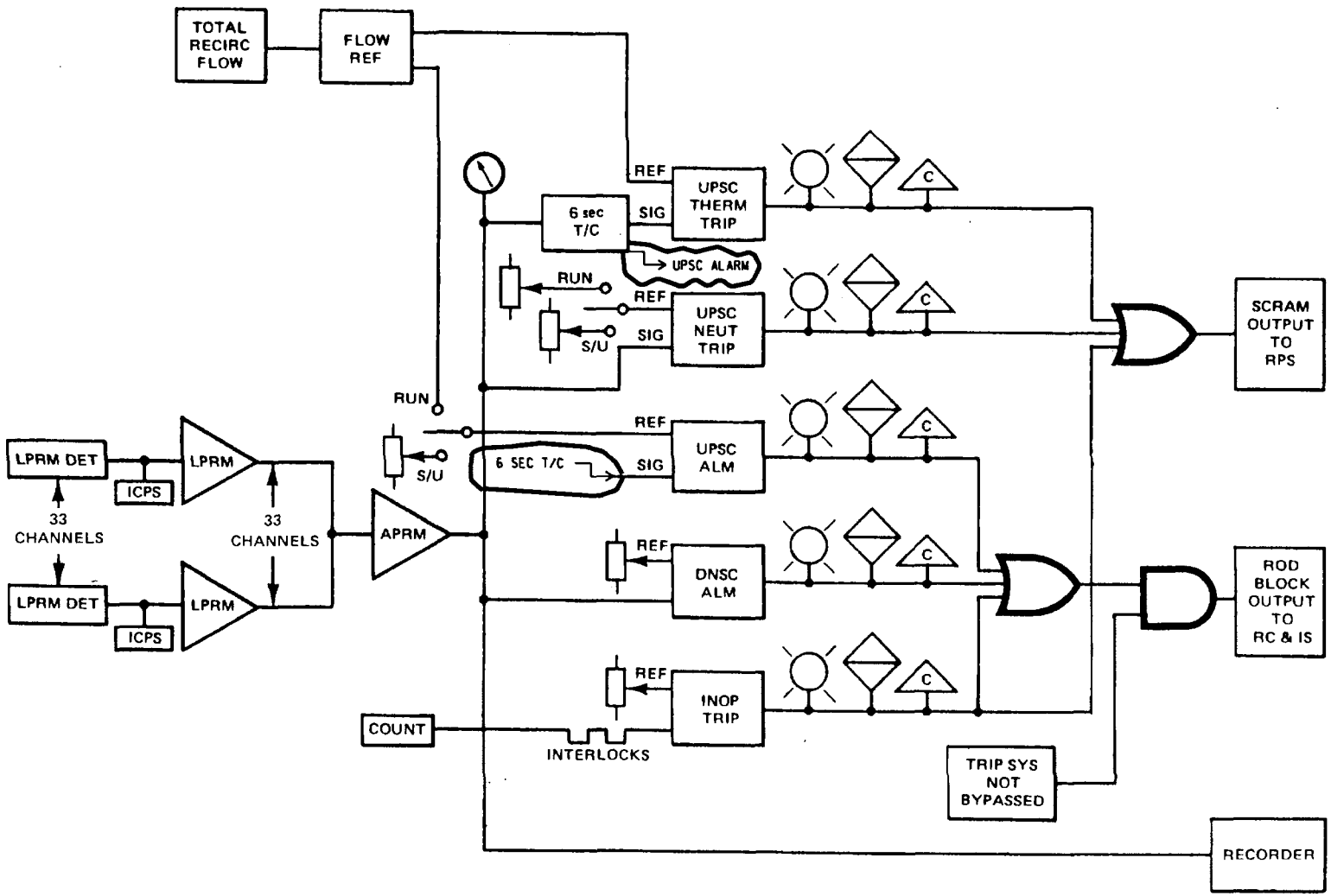

CLINTON POWER STATION
UPDATED SAFETY ANALYSIS REPORT

FIGURE 7.6-20
APRM BLOCK DIAGRAM
(TYPICAL OF FOUR CHANNELS)

FIGURE 7.6-21

HAS BEEN DELETED

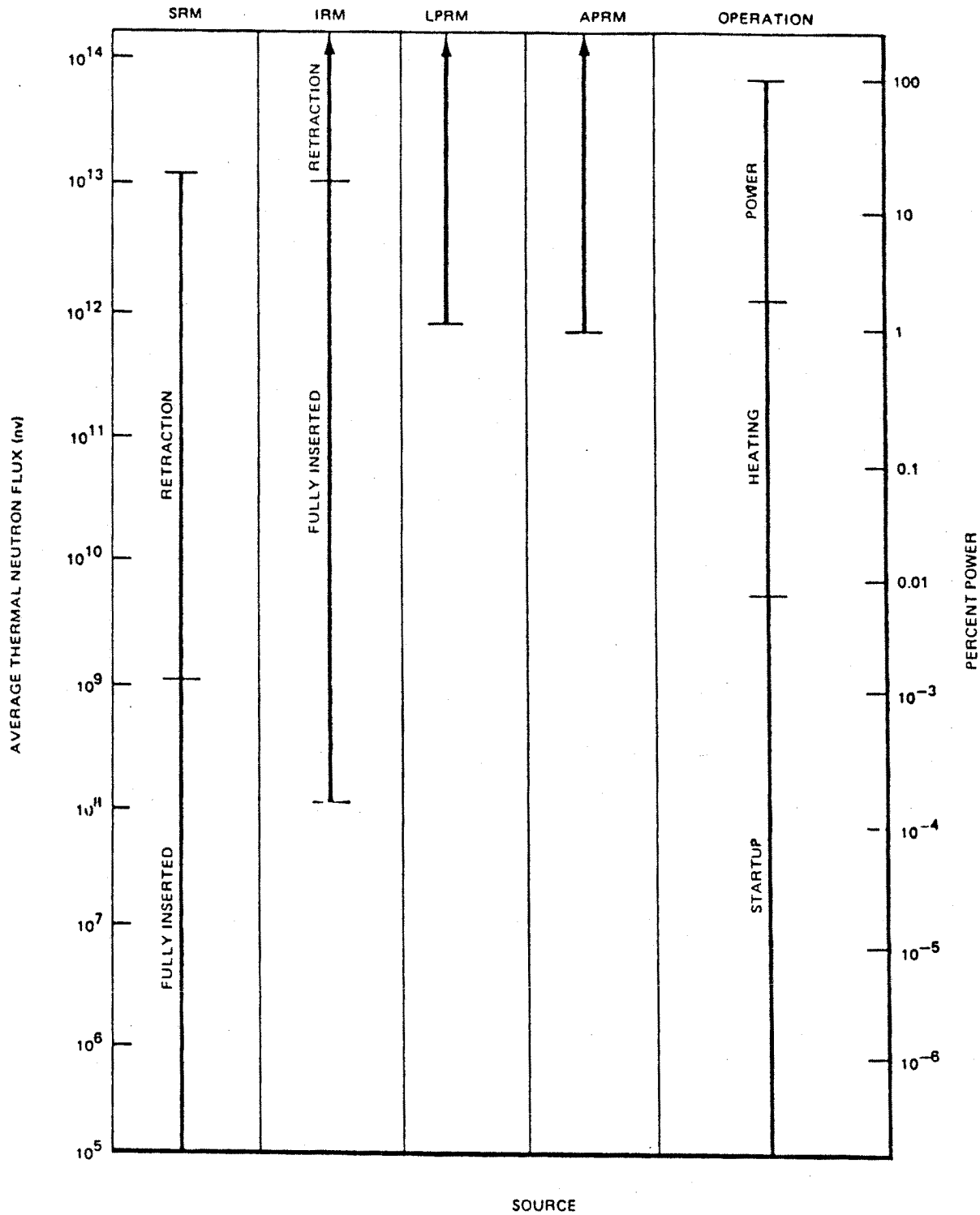

Figure 7.6-22. Ranges of Neutron Monitoring System

Figures 7.6-23 through 7.6-25
Deleted

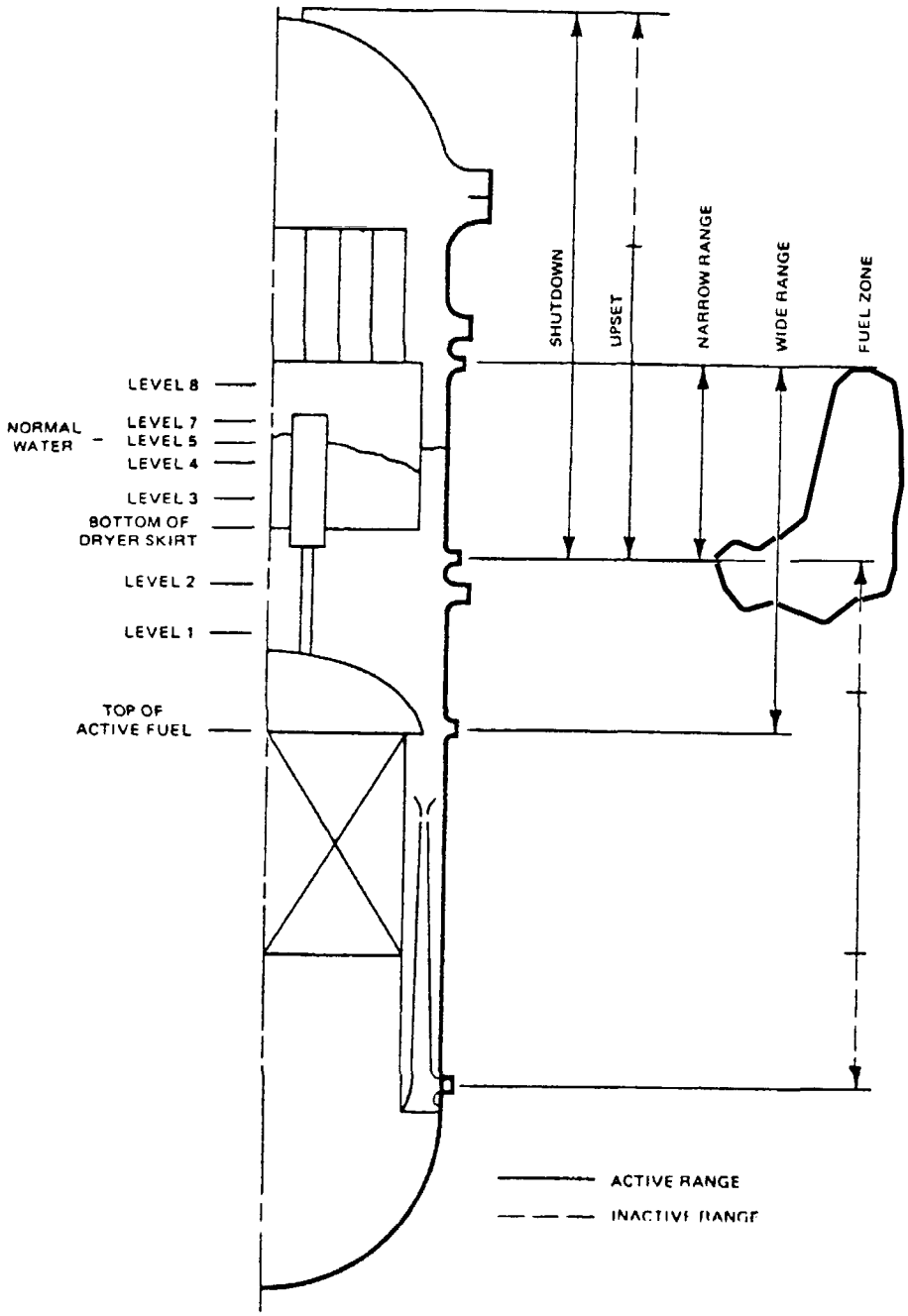

CLINTON POWER STATION
UPDATED SAFETY ANALYSIS REPORT

FIGURE 7.7-1
WATER LEVEL RANGE DEFINITION

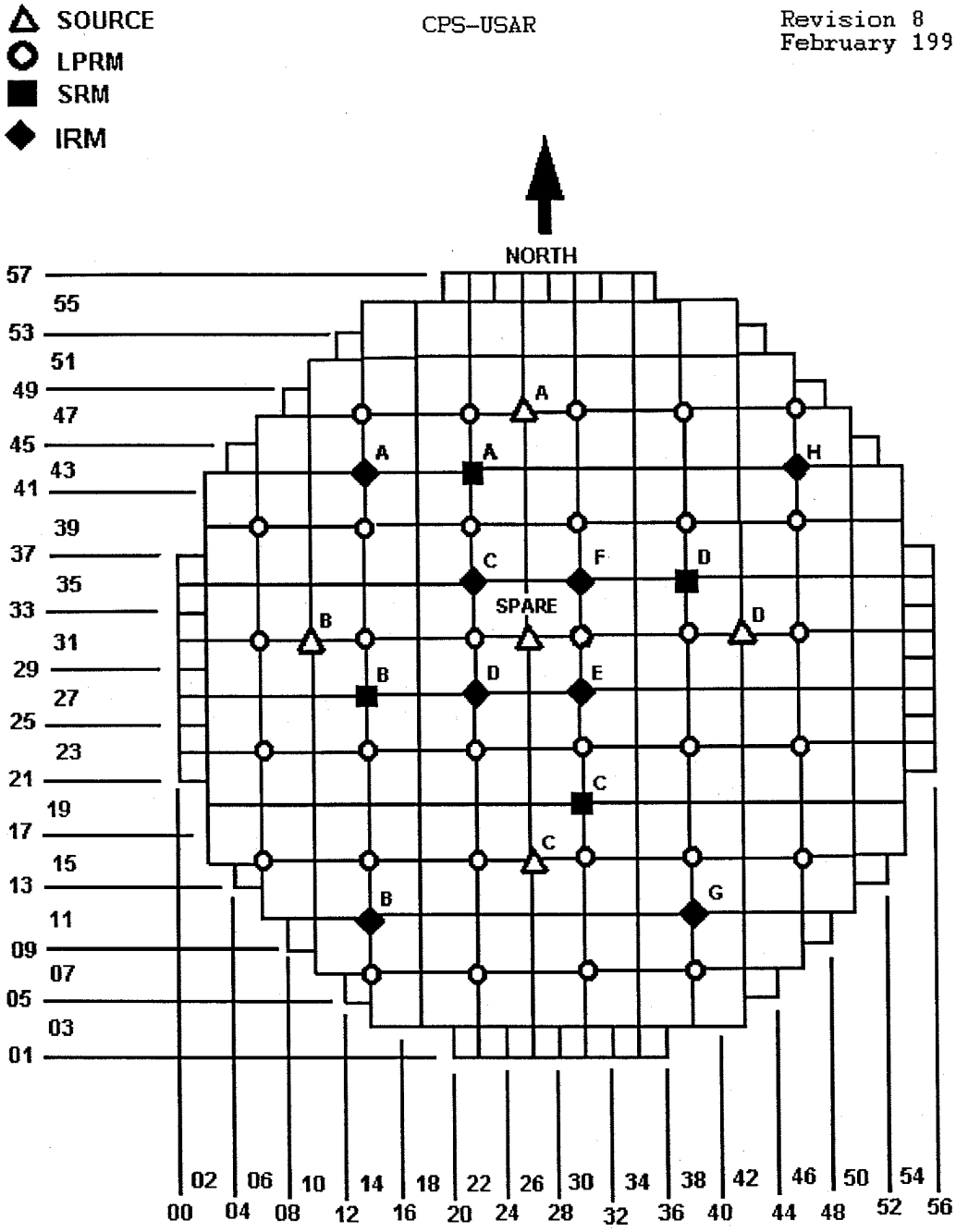

CLINTON POWER STATION
Figure 7.7-2 Source and Detector Locations

FIGURES 7.7-3 AND 7.7-4

HAVE BEEN DELETED

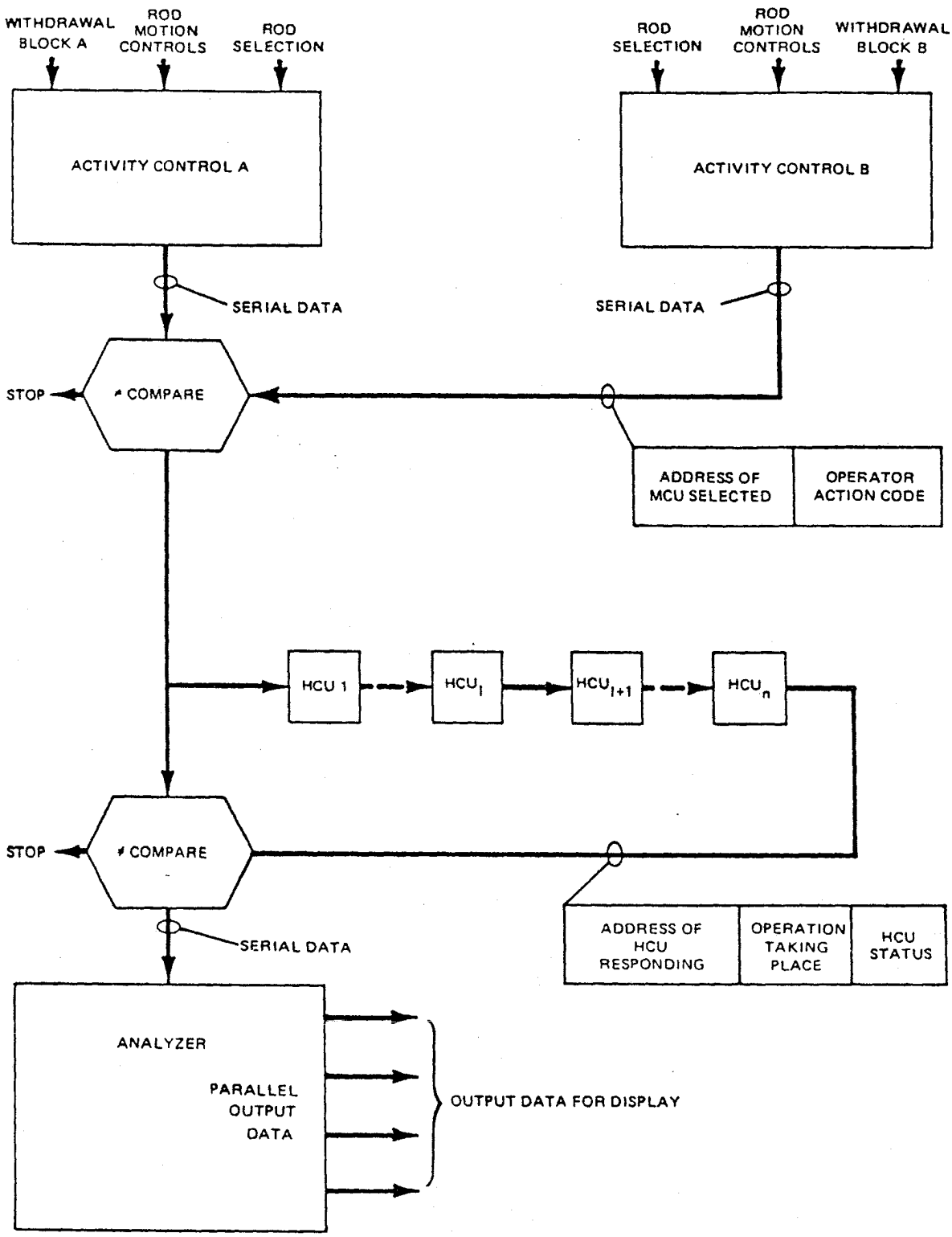

Figure 7.7-5. Rod Control and Information System Operation

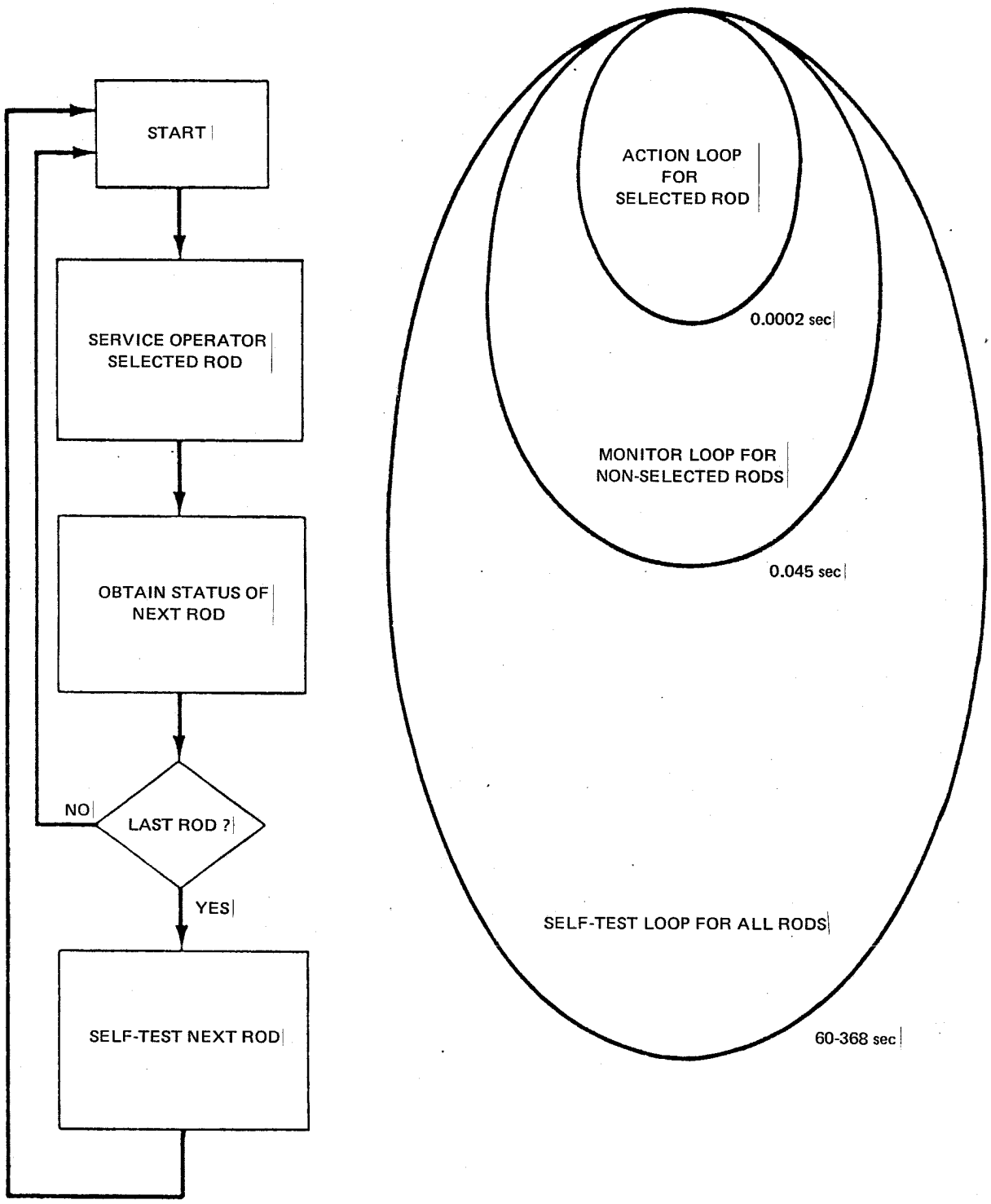

Figure 7.7-5a. RC&IS Self-Test Provisions

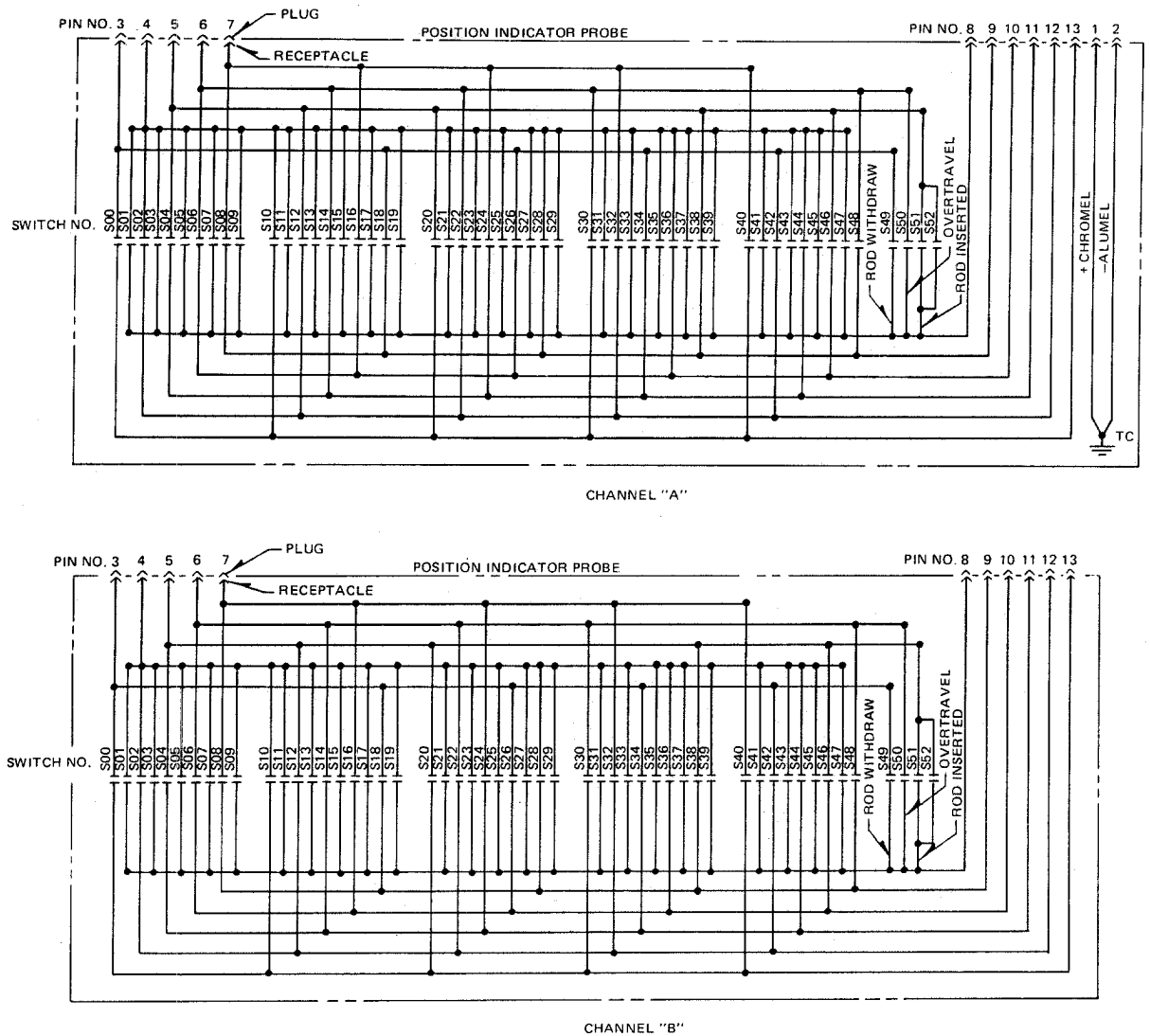

Figure 7.7-6. Dual Eleven-Wire Position Probe

FIGURE 7.7-7A

HAS BEEN DELETED

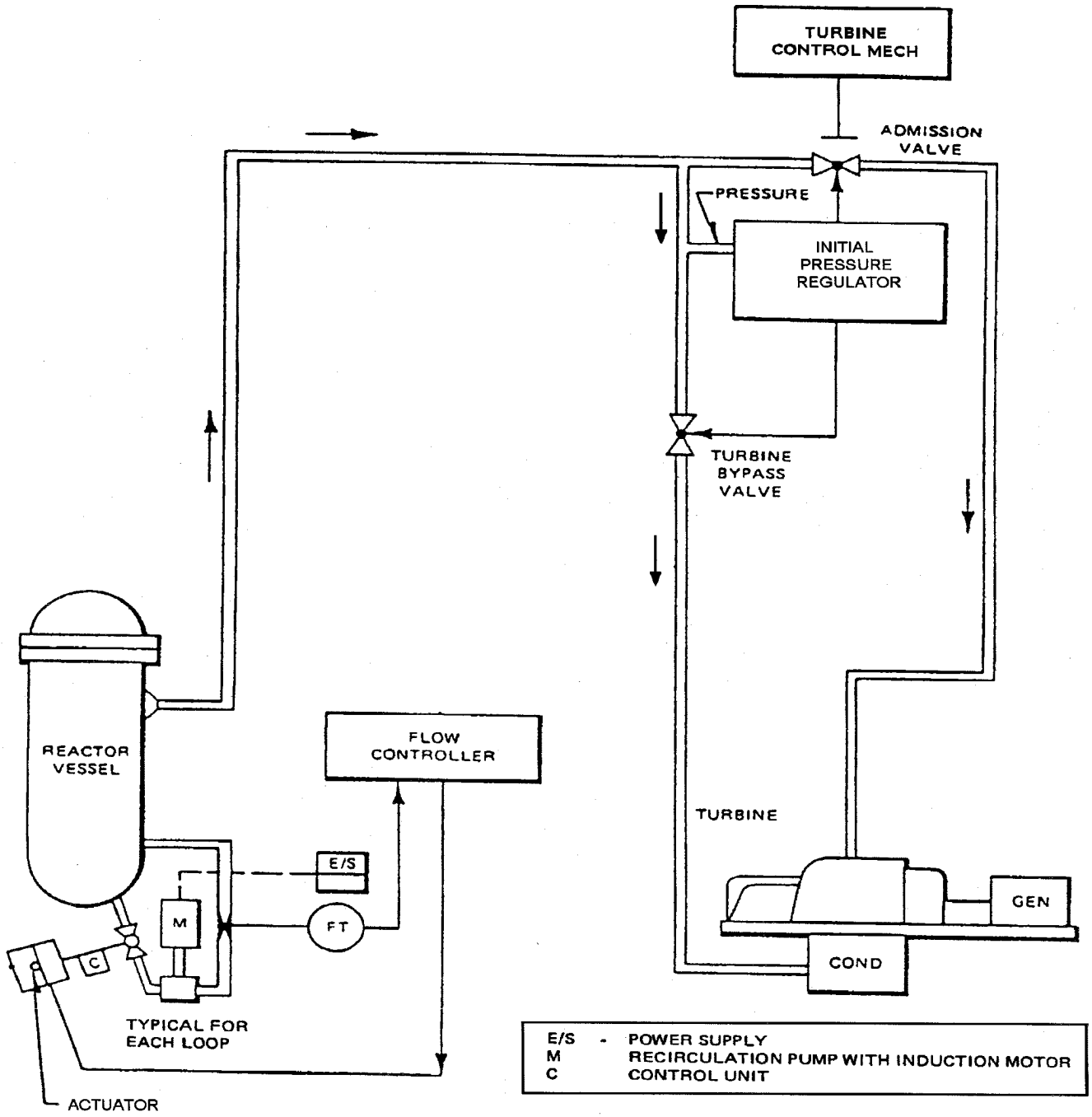

Figure 7.7-7b. Recirculation Flow Control Illustrations

FIGURES 7.7-8 AND 7.7-9

HAVE BEEN DELETED

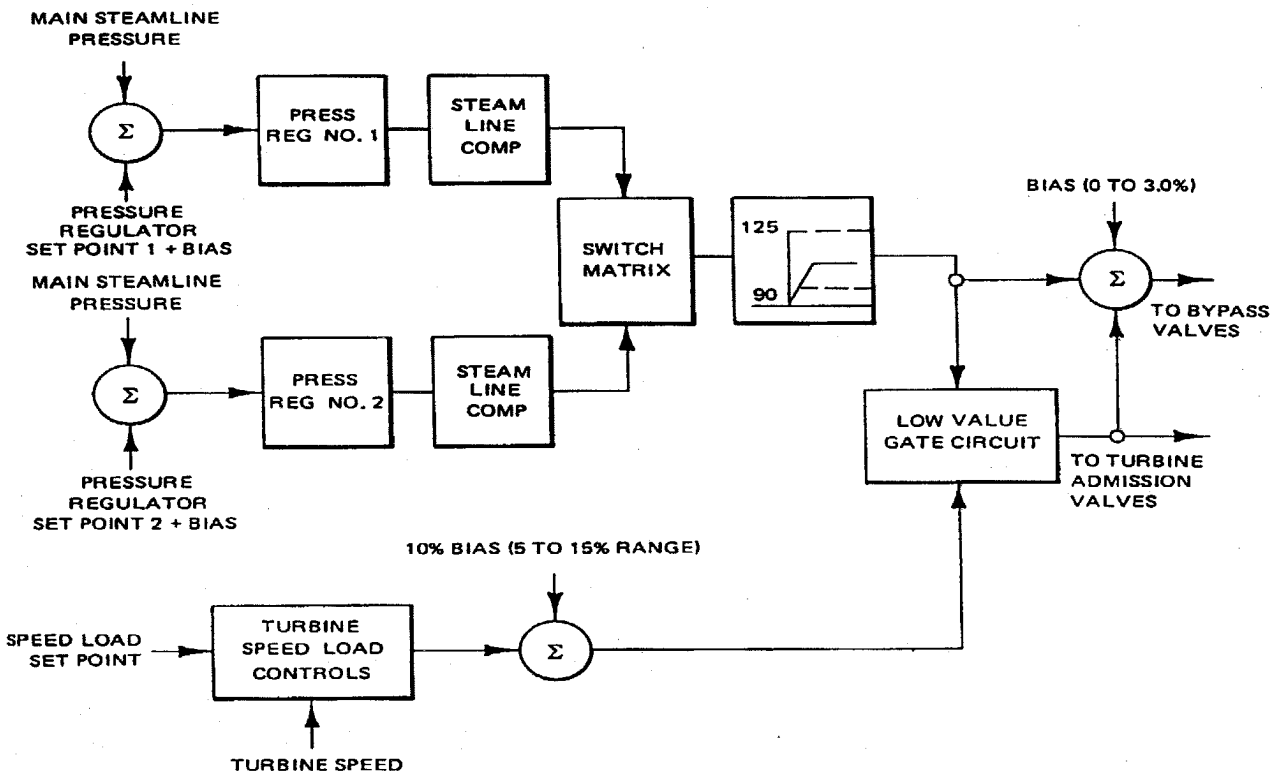

NOTE:
THE HIGH AND LOW VALUE GATE TERMINOLOGY REFERS TO THE MAGNITUDE OF THE INPUT SIGNAL TO THE GATE CIRCUIT UNDER NORMAL OPERATION CONDITIONS

Figure 7.7-10. Simplified Diagram, Turbine Pressure Control Requirements

Figures 7.7-11 through 7.7-14
Deleted

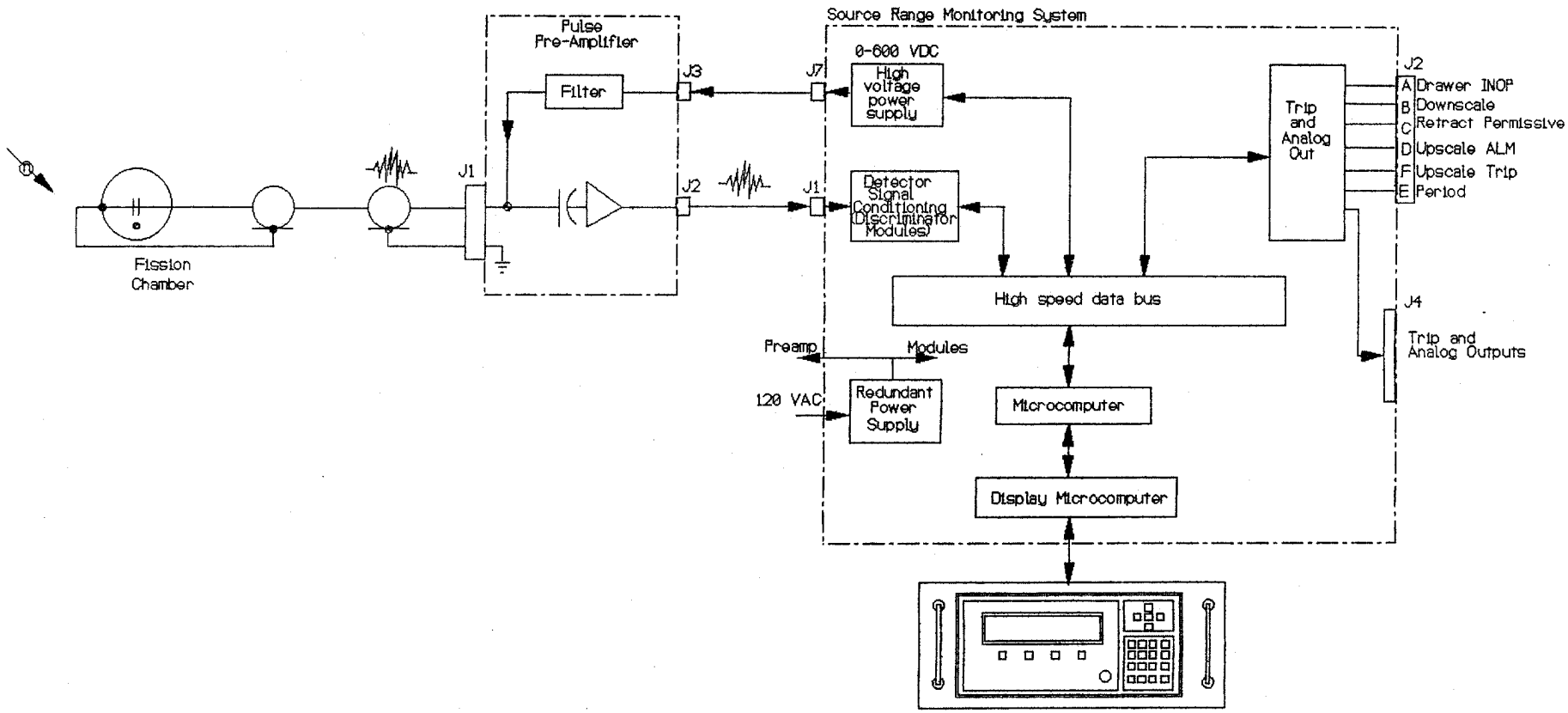

CLINTON POWER STATION
UPDATED SAFETY ANALYSIS REPORT

Figure 7.7-15 Functional Block Diagram of SRM Channel

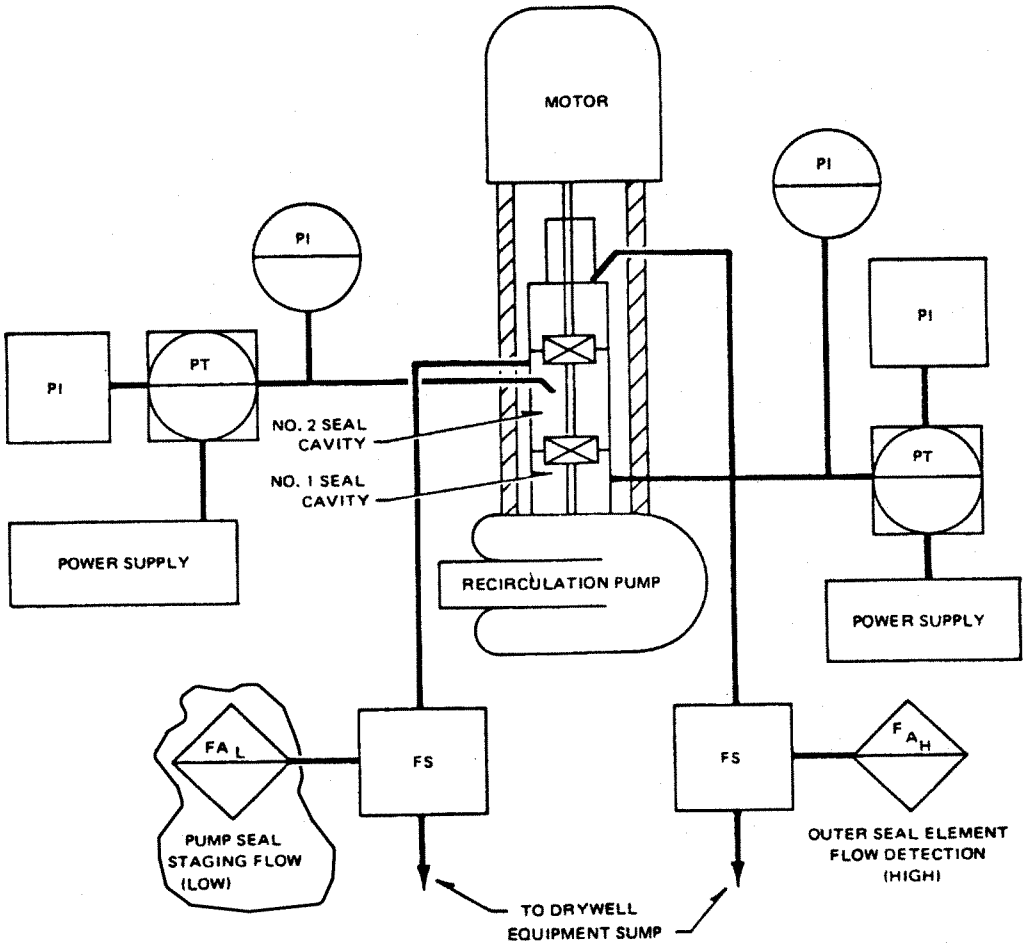

CLINTON POWER STATION
UPDATED SAFETY ANALYSIS REPORT

FIGURE 7.7-16
REACTOR RECIRCULATION PUMP
LEAK DETECTION BLOCK DIAGRAM