CHAPTER 5 - REACTOR COOLANT SYSTEM AND CONNECTED SYSTEMS

TABLE OF CONTENTS

		PAGE
5.1	SUMMARY DESCRIPTION	5.1-1
5.1.1	Schematic Flow Diagram	5.1-2
5.1.2	Piping and Instrumentation Diagram	5.1-3
5.1.3	Elevation Drawings	5.1 3
5.2	INTEGRITY OF REACTOR COOLANT PRESSURE BOUNDARY	5.2-1
5.2.1	Compliance with Codes and Code Cases	5.2-1
5.2.1.1	Compliance with 10 CFR Part 50, Section 50.55a	5.2-1
5.2.1.2	Applicable Code Cases	5.2-1
5.2.2	Overpressure Protection	5.2-1
5.2.2.1	Design Basis	5.2-1
5.2.2.1.1	Safety Design Bases	5.2-2
5.2.2.1.2	Power Generation Design Bases	5.2-2
5.2.2.1.3	Discussion	5.2-2
5.2.2.1.4	Safety Valve Capacity	5.2-3
5.2.2.2	Design Evaluation	5.2-3
5.2.2.2.1	Method of Analysis	5.2-3
5.2.2.2.2	System Design	5.2-4
5.2.2.2.2.1	Operating Conditions	5.2-4
5.2.2.2.2.2	Transients	5.2-4
5.2.2.2.2.3	Scram	5.2-5
5.2.2.2.2.4	Safety/Relief Valve Transient Analysis Specification	5.2-5
5.2.2.2.2.5	Safety/Relief Valve Capacity	5.2-5
5.2.2.2.3	Evaluation of Results	5.2-6
5.2.2.2.3.1	Safety/Relief Valve Capacity	5.2-6
5.2.2.2.3.2	Low-Low Set Relief Function	5.2-7
5.2.2.2.3.3	Pressure Drop in Inlet and Discharge	5.2-8
5.2.2.3	Piping & Instrument Diagrams	5.2-8
5.2.2.4	Equipment and Component Descritption	5.2-8
5.2.2.4.1	Description	5.2-8
5.2.2.4.2	Design Parameters	5.2-11
5.2.2.4.2.1	Safety/Relief Valve	5.2-11
5.2.2.5	Mounting of Pressure Relief Devices	5.2-11
5.2.2.6	Applicable Codes and Classification	5.2-12
5.2.2.7	Material Specification	5.2-12
5.2.2.8	Process Instrumentation	5.2-12
5.2.2.9	System Reliability	5.2-12
5.2.2.10	Inspection and Testing	5.2-12
5.2.3	Reactor Coolant Pressure Boundry Materials	5.2-13
5.2.3.1	Material Specifications	5.2-13
5.2.3.2	Compatibility with Reactor Coolant	5.2-13

TABLE OF CONTENTS (Cont'd)

		PAGE
5.2.3.2.1	PWR Chemistry of Reactor Coolant	5.2-13
5.2.3.2.2	BWR Chemistry of Reactor Coolant	5.2-13
5.2.3.2.3	Compatibility of Construction Materials with Reactor Coolant	5.2-19
5.2.3.2.4	Compatibility of Construction Materials with External Insulation and Reactor Coolant	5.2-19
5.2.3.3	Fabrication and Processing of Ferritic Materials	5.2-20
5.2.3.3.1	Fracture Toughness	5.2-20
5.2.3.3.1.1	Compliance with Code Requirements	5.2-20
5.2.3.3.2	Control of Welding	5.2-20
5.2.3.3.2.1	Control of Preheat Temperature Employed for Welding of Low Alloy Steel. Regulatory Guide 1.50	5.2-20
5.2.3.3.2.2	Control of Electroslag Weld Properties. Regulatory Guide 1.34	5.2-21
5.2.3.3.2.3	Welder Qualification for Areas of Limited Accessibility. Regulatory Guide 1.71	5.2-21
5.2.3.3.3	Nondestructive Examination of Ferritic Tubular Products. Regulatory Guide 1.66	5.2-21
5.2.3.3.4	Moisture Control for Low Hydrogen, Covered Arc-Welding Electrodes	5.2-21
5.2.3.4	Fabrication and Processing of Austenitic Stainless Steels	5.2-21
5.2.3.4.1	Avoidance of Stress Corrosion Cracking	5.2-21
5.2.3.4.1.1	Avoidance of Significant Sensitization	5.2-21
5.2.3.4.1.2	Process Controls to Minimize Exposure to Contaminants	5.2-22
5.2.3.4.1.3	Cold Worked Austenitic Stainless Steels	5.2-23
5.2.3.4.2	Control of Welding	5.2-23
5.2.3.4.2.1	Avoidance of Hot Cracking	5.2-23
5.2.3.4.2.2	Electroslag Welds Regulatory. Guide 1.34	5.2-23
5.2.3.4.2.3	Welder Qualification for Areas of Limited Accessibility. Regulatory Guide 1.71	5.2-23
5.2.3.4.3	Nondestructive Examination of Tubular Products. Regulatory Guide 1.66	5.2-24
5.2.4	Inservice Inspection and Testing of Reactor Coolant Pressure Boundary	5.2-24
5.2.4.1	Inservice Inspection Program	5.2-24
5.2.4.1.1	Examination Plans	5.2-24
5.2.4.1.1.1	Preservice Examination Plan	5.2-24
5.2.4.1.1.2	Inservice Examination Plan	5.2-26
5.2.4.2	System Boundaries Subject to Inspection	5.2-26
5.2.4.3	Provision for Access to Reactor Coolant Pressure Boundary	5.2-26
5.2.4.3.1	Reactor Pressure Vessel	5.2-26
5.2.4.3.2	Pipe, Pumps and Valves	5.2-27
5.2.4.4	Examination Techniques and Procedures	5.2-28
5.2.4.5	Equipment for Inservice Inspection	5.2-28
5.2.4.6	Inspection Intervals	5.2-29
5.2.4.7	Examination Categories and Requirements	5.2-29
5.2.4.8	Evaluation of Examination Results	5.2-29
5.2.4.9	Coordination of Inspection Equipment with Access Provisions	5.2-29
5.2.4.10	System Leakage and Hydrostatic Tests	5.2-29

5.2.4.11	Ultrasonic Calibration Standards	5.2-29
5.2.4.12	Augmented Inservice Inspection	5.2-29
5.2.4.12.1	Feedwater Nozzles and CRD Return Line Nozzle Examinations	5.2-29
5.2.4.12.2	Examination of Piping Susceptible to Intergranular Stress Corrosion Cracking	5.2-30
5.2.4.12.3	Examination of Containment Penetration Head Fittings	5.2-30
5.2.4.12.4	Examination of Break Exclusion Region	5.2-30
5.2.4.13	Repairs	5.2-30
5.2.5	Reactor Coolant Pressure Boundary and ECCS System Leakage Detection System	5.2-30a
5.2.5.1	Leakage Detection Methods	5.2-30a
5.2.5.1.1	Detection of Leakage Within The Drywell	5.2-31
5.2.5.1.2	Detection of Leakage External to the Drywell	5.2-31
5.2.5.1.3	Detection of Leakage External to Containment Building	5.2-32
5.2.5.1.4	Intersystem Leakage Monitoring	5.2-33
5.2.5.2	Leak Detection Instrumentation and Monitoring	5.2-33
5.2.5.2.1	Leak Detection Instrumentation and Monitoring Inside Drywell	5.2-33
5.2.5.2.2	Containment/Drywell Airborne Radioactivity Monitoring	5.2-36
5.2.5.2.2.1	Source of Leakage	5.2-36
5.2.5.2.2.2	Drywell Conditions Affecting Monitor Performance	5.2-36
5.2.5.2.2.3	Capabilities of the Detector	5.2-37
5.2.5.2.3	Leak Detection Instrumentation and Monitoring External to the Drywell	5.2-38
5.2.5.2.4	Summary	5.2-39
5.2.5.3	Indication in Control Room	5.2-40
5.2.5.4	Limits for Reactor Coolant Leakage	5.2-40
5.2.5.4.1	Total Leakage Rate	5.2-40
5.2.5.4.2	Identified Leakage Inside Drywell	5.2-40
5.2.5.5	Unidentified Leakage Inside the Drywell	5.2-41
5.2.5.5.1	Unidentified Leakage Rate	5.2-41
5.2.5.5.2	Sensitivity and Response Times	5.2-41
5.2.5.5.3	Length of Through-Wall Flaw	5.2-41
5.2.5.5.4	Margins of Safety	5.2-43
5.2.5.5.5	Criteria to Evaluate the Adequacy and Margin of the Leak Detection System	5.2-43
5.2.5.6	Differentiation Between Identified and Unidentified Leaks	5.2-44
5.2.5.7	Sensitivity and Operability Tests	5.2-44
5.2.5.8	Safety Interfaces	5.2-44
5.2.5.9	Testing and Calibration	5.2-44
5.2.5.10	Regulatory Guide 1.45 Compliance	5.2-44
5.2.6	References	5.2-45
5.3	REACTOR VESSEL	5.3-1
5.3.1	Reactor Vessel Materials	5.3-1
5.3.1.1	Material Specifications	5.3-1
5.3.1.2	Special Processes Used for Manufacturing and Fabrication	5.3-1
5.3.1.3	Special Methods for Nondestructive Examination	5.3-2

5.3.1.4	Special Controls for Ferritic and Austentic Stainless Steels	5.3-2
5.3.1.4.1	Compliance with Regulatory Guides	5.3-2
5.3.1.4.1.1	Regulatory Guide 1.31, Control of Stainless Steel Welding	5.3-2
5.3.1.4.1.2	Regulatory Guide 1.34, Control of Electroslag Weld Properties	5.3-2
\5.3.1.4.1.3	Regulatory Guide 1.43, Control of Stainless Steel Weld Cladding of Low-Alloy Steel Components	5.3-2
5.3.1.4.1.4	Regulatory Guide 1.44, Control of the Use of Sensitized Stainless Steel	5.3-2
5.3.1.4.1.5	Regulatory Guide 1.50, Control of Preheat Temperature for Welding Low-Alloy Steel	5.3-2
5.3.1.4.1.6	Regulatory Guide 1.71, Welder Qualification for Areas of Limited Accessibility	5.3-2
5.3.1.4.1.7	Regulatory Guide 1.99, Revision 2, Radiation Embrittlement of Reactor Vessel Materials	5.3-2
5.3.1.5	Fracture Toughness	5.3-3
5.3.1.5.1	Compliance with 10 CFR 50 Appendix G	5.3-3
5.3.1.5.1.1	Method of Compliance	5.3-3
5.3.1.6	Material Surveillance	5.3-5
5.3.1.6.1	Compliance with “Reactor Vessel Material Surveillance Program Requirements”	5.3-5
5.3.1.6.2	Neutron Flux and Fluence Calculations	5.3-6
5.3.1.6.3	Predicted Irradiation Effects on Vessel Beltline Materials	5.3-6
5.3.1.6.4	Positioning of Surveillance Capsules and Method of Attachment	5.3-6
5.3.1.6.5	Time and Number of Dosimetry Measurements	5.3-7
5.3.1.7	Reactor Vessel Fasteners	5.3-7
5.3.2	Pressure-Temperature Limits	5.3-9
5.3.2.1	Limit Curves	5.3-9
5.3.2.1.1	Temperature Limits for Boltup	5.3-9
5.3.2.1.2	Temperature Limits for ISI Hydro Static or Leak Pressure Tests	5.3-9
5.3.2.1.3	Operating Limits During Heatup, Cool- down and Core Operation	5.3-10
5.3.2.1.4	Reactor Vessel Annealing	5.3-10
5.3.2.1.5	Predicted Shift in RTNDT	5.3-10
5.3.2.2	Operating Procedures	5.3-10
5.3.3	Reactor Vessel Integrity	5.3-10
5.3.3.1	Design	5.3-12
5.3.3.1.1	Description	5.3-12
5.3.3.1.1.1	Reactor Vessel	5.3-12
5.3.3.1.1.2	Shroud Support	5.3-12
5.3.3.1.1.3	Protection of Closure Studs	5.3-12
5.3.3.1.2	Safety Design Basis	5.3-13
5.3.3.1.3	Power Generation Design Basis	5.3-13
5.3.3.1.4	Reactor Vessel Design Data	5.3-13
5.3.3.1.4.1	Vessel Supports	5.3-13
5.3.3.1.4.2	Control Rod Drive Housings	5.3-13
5.3.3.1.4.3	In-Core Neutron Flux Monitor Housings	5.3-14
5.3.3.1.4.4	Reactor Vessel Insulation	5.3-14
5.3.3.1.4.5	Reactor Vessel Nozzles	5.3-14
5.3.3.1.4.6	Materials and Inspections	5.3-16
5.3.3.1.4.7	Reactor Vessel Schematic (BWR)	5.3-16
5.3.3.2	Materials of Construction	5.3-17
5.3.3.3	Fabrication Methods	5.3-17

TABLE OF CONTENTS (Cont'd)

		PAGE
5.3.3.4	Inspection Requirements	5.3-17
5.3.3.5	Shipment and Installation	5.3-17
5.3.3.6	Operating Conditions	5.3-18
5.3.3.7	Inservice Surveillance	5.3-18
5.3.4	References	5.3-19
A5.3	Attachments A and B to Question 251.2	
5.4	COMPONENT AND SUBSYSTEM DESIGN	5.4-1
5.4.1	Reactor Recirculation Pumps	5.4-1
5.4.1.1	Safety Design Bases	5.4-1
5.4.1.2	Power Generation Design Bases	5.4-1
5.4.1.3	Description	5.4-1
5.4.1.4	Safety Evaluation	5.4-3
5.4.1.4.1	Compliance with General Design Criteria	5.4-4
5.4.1.5	Inspection and Testing	5.4-4
5.4.1.6	Operation	5.4-5
5.4.1.6.1	Normal Operation	5.4-5
5.4.1.6.1.1	Start	5.4-5
5.4.1.6.1.2	Heatup and Pressurization	5.4-6
5.4.1.6.1.3	Low Thermal Power	5.4-6
5.4.1.6.1.4	High Thermal Power	5.4-6
5.4.1.6.1.5	Power-Flow Control	5.4-6
5.4.1.6.2	Abnormal Operation	5.4-6
5.4.1.6.2.1	Safety	5.4-7
5.4.1.6.2.1.1	Moderate and Infrequent Events	5.4-7
5.4.1.6.2.1.2	Accident Events	5.4-7
5.4.1.6.2.2	Power Generation	5.4-7
5.4.1.6.2.2.1	Cavitation Interlocks	5.4-7
5.4.1.6.2.2.2	Flow Control Valve Automatic Runback	5.4-7
5.4.1.6.2.2.3	Flow Control Valve Minimum Position Interlock	5.4-7
5.4.1.6.2.2.4	LFMG Output Breaker Control	5.4-7
5.4.1.6.2.2.5	High Loop Flow Mismatch	5.4-8
5.4.1.6.2.2.6	Loop Suction and Discharge Isolation Valve Position	5.4-8
5.4.1.6.2.2.7	Trip to 25% Speed	5.4-8
5.4.1.6.3	One-Pump Operation	5.4-8
5.4.1.6.3.1	One Recirculation Pump Operation	5.4-8
5.4.1.6.3.2	Restart of One Recirculation Pump	5.4-8
5.4.1.6.4	Automatic Load-Following (ALF) Characteristics (Deleted)	5.4-8
5.4.1.6.5	Trip and Start Functions	5.4-8
5.4.1.6.6	Suction and Discharge Block Valve Operation	5.4-8
5.4.1.6.7	Residual Heat Removal System Operation	5.4-9
5.4.1.7	Safety Related Considerations	5.4-9
5.4.1.7.1	Pressure Integrity	5.4-9
5.4.1.7.2	Bearing Load Capability	5.4-9
5.4.1.7.3	Pump Shaft Critical Speed	5.4-9
5.4.1.7.4	Pump Bearing Integrity	5.4-9

TABLE OF CONTENTS (Cont'd)

		PAGE
5.4.1.7.5	Pipe Rupture	5.4-9
5.4.1.7.6	Suction And Discharge Block Valve Close Rate	5.4-9
5.4.1.7.7	Flow Control Valve Actuator Stroking Rate	5.4-10
5.4.1.7.8	Loop Flow Balance	5.4-10
5.4.1.7.9	Thermal Shock	5.4-10
5.4.1.7.10	Anticipated Transients Without Scrams (ATWS)	5.4-10
5.4.1.8	Flow Control Components Description	5.4-10
5.4.1.8.1	Flow Control Valves (FCV)	5.4-10
5.4.1.8.2	Hydraulic Equipment	5.4-11
5.4.1.8.2.1	Flow Control Valve Actuator	5.4-11
5.4.1.8.2.2	Circulation Unit	5.4-12
5.4.1.8.2.3	Hydraulic Power Unit	5.4-12
5.4.1.8.2.4	Interconnecting Piping and Drain and Vent Valves	5.4-12
5.4.1.8.2.5	Hydraulic Fluid	5.4-12
5.4.1.9	Flow Control System Description	5.4-12
5.4.1.9.1	Safety Requirements	5.4-12
5.4.1.9.2	Design Description	5.4-12
5.4.1.9.3	Valve Actuation Equipment	5.4-13
5.4.1.9.4	Circuit Description	5.4-14
5.4.1.9.5	Hydraulic Power Unit Logic Controls	5.4-15
5.4.1.9.5.1	General Description	5.4-15
5.4.1.9.5.2	Functional Description	5.4-15
5.4.1.10	Low-Frequency Motor-Generator (LFMG) Set	5.4-17
5.4.1.10.1	Description	5.4-17
5.4.1.10.2	Safety	5.4-17
5.4.1.10.3	Power Generation	5.4-17
5.4.1.11	Power Supplies	5.4-17
5.4.1.11.1	General	5.4-17
5.4.1.11.2	Power Supply Arrangement	5.4-17
5.4.2	Steam Generators (PWR)	5.4-17
5.4.3	Reactor Coolant Piping	5.4-17
5.4.4	Main Steam Line Flow Restrictors	5.4-18
5.4.4.1	Safety Design Bases	5.4-18
5.4.4.2	Description	5.4-18
5.4.4.3	Safety Evaluation	5.4-18
5.4.4.4	Inspection and Testing	5.4-19
5.4.5	Main Steam Line Isolation System	5.4-19
5.4.5.1	Safety Design Bases	5.4-19
5.4.5.2	Description	5.4-20
5.4.5.3	Safety Evaluation	5.4-22
5.4.5.4	Inspection and Testing	5.4-23
5.4.6	Reactor Core Isolation Cooling System	5.4-24
5.4.6.1	Design Basis	5.4-24
5.4.6.1.1	Residual Heat and Isolation	5.4-25
5.4.6.1.1.1	Residual Heat	5.4-25
5.4.6.1.1.2	Isolation	5.4-25
5.4.6.1.2	Reliability, Operability, and Manual Operation	5.4-26

TABLE OF CONTENTS (Cont'd)

		PAGE
5.4.6.1.2.1	Reliability and Operability	5.4-26
5.4.6.1.2.2	Manual Operation	5.4-27
5.4.6.1.3	Loss of Offsite Power	5.4-27
5.4.6.1.4	Physical Damage	5.4-27
5.4.6.1.5	Environment	5.4-27
5.4.6.2	System Design	5.4-27
5.4.6.2.1	General	5.4-27
5.4.6.2.1.1	Description	5.4-27
5.4.6.2.1.2	Diagrams	5.4-27
5.4.6.2.1.3	Interlocks	5.4-28
5.4.6.2.2	Equipment and Component Description	5.4-29
5.4.6.2.2.1	Design Conditions	5.4-29
5.4.6.2.2.2	Design Parameters	5.4-30
5.4.6.2.3	Applicable Codes and Classifications	5.4-34
5.4.6.2.4	System Reliability Considerations	5.4-34
5.4.6.2.5	System Operation	5.4-36
5.4.6.2.5.1	Automatic Operation	5.4-36
5.4.6.2.5.2	Test Loop Operation	5.4-37
5.4.6.2.5.3	Steam Condensing (Hot Standby) Operation - Not Available	5.4-38
5.4.6.2.5.4	Limiting Single Failure	5.4-38
5.4.6.3	Performance Evaluation	5.4-39
5.4.6.4	Preoperational Testing	5.4-39
5.4.7	Residual Heat Removal System	5.4-39
5.4.7.1	Design Bases	5.4-39
5.4.7.1.1	Functional Design Basis	5.4-39
5.4.7.1.1.1	Residual Heat Removal Mode (Shutdown Cooling Mode)	5.4-39
5.4.7.1.1.2	Low Pressure Injection (LPCI) Mode	5.4-40
5.4.7.1.1.3	Suppression Pool Cooling Mode	5.4-40
5.4.7.1.1.4	Containment Spray Cooling Mode	5.4-40
5.4.7.1.1.5	Reactor Steam Condensing Mode - Not Available	5.4-40
5.4.7.1.1.6	Feedwater Leakage Control Mode (FWLC)	5.4-40
5.4.7.1.2	Design Basis for Isolation of RHR System from Reactor Coolant System	5.4-41
5.4.7.1.3	Design Basis for Pressure Relief Capacity	5.4-42
5.4.7.1.3.1	RHR System Relief with respect to Operator Errors	5.4-43
5.4.7.1.4	Design Basis with Respect to General Design Criterion 5	5.4-44
5.4.7.1.5	Design Basis for Reliability and Operability	5.4-44
5.4.7.1.6	Design Basis for Protection from Physical Damage	5.4-45
5.4.7.2	Systems Design	5.4-45
5.4.7.2.1	System Diagrams	5.4-45
5.4.7.2.2	Equipment and Component Description	5.4-45
5.4.7.2.3	Controls and Instrumentation	5.4-46
5.4.7.2.4	Applicable Codes and Classifications	5.4-47
5.4.7.2.5	Reliability Considerations	5.4-47
5.4.7.2.6	Manual Action	5.4-47
5.4.7.2.7	Outline of Operating Procedure	5.4-48
5.4.7.3	Performance Evaluation	5.4-49

TABLE OF CONTENTS (Cont'd)

		PAGE
5.4.7.3.1	Shutdown with All Components Available	5.4-49
5.4.7.3.2	Shutdown with Most Limiting Failure	5.4-50
5.4.7.3.3	Shutdown with Crack in RHR Cooling Loop	5.4-50
5.4.7.4	Preoperational Testing	5.4-51
5.4.8	Reactor Water Cleanup System	5.4-51
5.4.8.1	Design Bases	5.4-51
5.4.8.1.1	Safety Design Basis	5.4-51
5.4.8.1.2	Power Generation Design Bases	5.4-51
5.4.8.2	System Description	5.4-52
5.4.8.3	System Evaluation	5.4-54
5.4.9	Main Steam Lines and Feedwater Piping	5.4-54
5.4.9.1	Safety Design Bases	5.4-54
5.4.9.2	Power Generation Design Bases	5.4-54
5.4.9.3	Description	5.4-55
5.4.9.4	Safety Evaluation	5.4-55
5.4.9.5	Inspection and Testing	5.4-56
5.4.10	Pressurizer (Not Applicable to BWR)	5.4-56
5.4.11	Pressurizer Relief Discharge System (Not Applicable to BWR)	5.4-56
5.4.12	Valves	5.4-56
5.4.12.1	Safety Design Bases	5.4-56
5.4.12.2	Description	5.4-56
5.4.12.3	Safety Evaluation	5.4-56
5.4.12.4	Inspection and Testing	5.4-57
5.4.13	Safety and Relief Valves	5.4-57
5.4.13.1	Safety Design Bases	5.4-57
5.4.13.2	Description	5.4-57
5.4.13.3	Safety Evaluation	5.4-57
5.4.13.4	Inspection and Testing	5.4-58
5.4.14	Component Supports	5.4-58
5.4.14.1	Safety Design Bases	5.4-58
5.4.14.2	Description	5.4-58
5.4.14.3	Safety Evaluation	5.4-58
5.4.14.4	Inspection and Testing	5.4-58
5.4.15	Hydrogen Water Chemistry System	5.4-59
5.4.15.1	Design Basis	5.4-59
5.4.15.2	System Description	5.4-59
5.4.16	References	5.4-60

CHAPTER 5 - REACTOR COOLANT SYSTEM AND CONNECTED SYSTEMS

LIST OF TABLES

NUMBER	TITLE	PAGE
5.2-1	Reactor Coolant Pressure Boundary Components Applicable Code Cases	5.2-47
5.2-2	Nuclear System Safety Relief Set Pressures and Capacities	5.2-48
5.2-3	Preservice Examination Coverage	5.2-49
5.2-4	Reactor Coolant Pressure Boundary Materials	5.2-50
5.2-5	(Deleted)	5.2-56
5.2-6	Typical BWR Water Chemistry	5.2-57
5.2-7	Systems Which May Initiate During Overpressure Event	5.2-58
5.2-8	Water Sample Locations	5.2-59
5.2-9a	Summary of Isolation/Alarm of System Monitored and the Leak Detection Methods Used (Summary of Variable Trip Alarms Leakage Source vs. Generated Variables)	5.2-60
5.2-9b	Summary of Isolation/Alarm of System Monitored and the Leak Detection Methods Used	5.2-62
5.2-10	Sequence of Events for Figure 5.2-1	5.2-63
5.3-1	Charpy Test Results	5.3-20
5.3-2	Beltline Plate & Weld RT_{NDT} & USE Values	5.3-24
5.3-3	Beltline & Adjacent Girth Weld ART Results	5.3-26
5.3-4	Shell Course Number 1 ART Results	5.3-27
5.4-1	Reactor Recirculation System Design Characteristics	5.4-61
5.4-2	Reactor Water Cleanup System Equipment Design Data	5.4-64
5.4-3	RHR Pump/Valve Logic	5.4-65
5.4-4	Recirculation System Trip and Start Functions	5.4-69
5.4-5	Reactor Core Isolation Cooling System - Design Specification Valve Stroke Time/ Differential Pressure Historical Information	5.4-70

CHAPTER 5 - REACTOR COOLANT SYSTEM AND CONNECTED SYSTEMS

LIST OF FIGURES

NUMBER	TITLE
5.1-1	Rated Operating Conditions of the Boiling Water Reactor
5.1-2	Coolant Volumes of the Boiling Water Reactor
5.2-1	Safety/Relief Valve Capacity Sizing Transient MSIV Closure with High Flux Trip
5.2-2A	Safety/Relief Valve Lift vs. Time Characteristic (Power Actuated Relief Mode)
5.2-2B	Safety/Relief Valve Lift vs. Time Characteristic (Spring Action Safety Mode)
5.2-3A	Scram Reactivity versus Time Characteristic
5.2-3B	Control Rod Drive vs. Time Characteristics
5.2-4	Peak Vessel Pressure versus Safety/Relief Capacity
5.2-5	Time Response for Pressurization Transients for Safety/Relief Capacity Sizing
5.2-6	(Deleted)
5.2-7A	Reactor Vessel Pressure Following Transient Isolation Event
5.2-7B	Power Actuated and Safety Action Valve Lift Characteristics
5.2-8	Safety/Relief Valve and Steamline Schematic
5.2-9	Not Used
5.2-10	Schematic of Safety/Relief Valve with Auxiliary Actuating Device
5.2-11	Typical BWR Flow Diagram
5.2-12	Conductance vs. pH as a Function of Chloride Concentration of Aqueous Solution at 25°C
5.2-13	Calculated Leak Rate vs. Crack Length as a Function of Applied Hoop Stress
5.2-14	Axial Through-Wall Crack Length Data Correlation
5.2-15	Cross-Section View of Valve-Operating BWRs
5.3-1	Reactor Vessel Cutaway Diagram
5.3-2	Nominal Reactor Vessel Water Level Trip and Alarm Elevations
5.4-1	Recirculation System Elevation and Isometric
5.4-2	Deleted
5.4-3	Recirculation Pump Head, NPSH, and Efficiency vs. Flow Curves
5.4-4	Deleted
5.4-5	Operating Principle of Jet Pump
5.4-6	Core Flooding Capability of Recirculation System
5.4-7	Main Steamline Flow Restrictor
5.4-8	Main Steamline Isolation Valve
5.4-9	Deleted

5.4-10	Deleted
5.4-11	Vessel Coolant Temperature versus Time (Two Heat Exchangers Available)
5.4-12	Vessel Coolant Temperature versus Time (One Heat Exchanger Available)
5.4-13	Deleted
5.4-14	Deleted
5.4-15	RHR Pump Characteristic Curves
5.4-16 through 5.4-19	Deleted
5.4-20	Recirculation System External Loop Piping Layout
5.4-21	One Pump Operation Map
5.4-22	Deleted
5.4-23	Power Supply Development "A" Recirculation Loop
5.4-24	Layout of Auxiliary Power System for Reactor Recirculation System Pump "A"

CHAPTER 5 - REACTOR COOLANT SYSTEM AND CONNECTED SYSTEMS

DRAWINGS CITED IN THIS CHAPTER*

*The listed drawings are included as "General References" only; i.e., refer to the drawings to obtain additional detail or to obtain background information. These drawings are not part of the USAR. They are controlled by the Controlled Documents Program.

DRAWING*	SUBJECT
105D4952AC	Reactor Water Cleanup
762E421AA	Process Diagram Reactor Core Isolation Cooling
762E425AC	Process Diagram Reactor Heat Removal
767E956	Bracket for Holding Surveillance Capsule
794E766AB	Filter/Demineralization System
796E724	Nuclear Boiler System
M01-1111	General Arrangement - Sections "C-C", "D-D", and "E-E"
M01-1112	General Arrangement - Sections "F1-F1", "F2-F2", and "G-G"
M05-1002	Main Steam
M05-1004	Reactor Feedwater System
M05-1041	Leakage Detection
M05-1072	Reactor Recirculation System
M05-1075	Residual Heat Removal System
M05-1076	Reactor Water Cleanup System
M05-1079	Reactor Core Isolation Cooling System

5.0 REACTOR COOLANT SYSTEM AND CONNECTED SYSTEMS

5.1 SUMMARY DESCRIPTION

The reactor coolant system includes those systems and components which contain or transport fluids coming from, or going to the reactor core. These systems form a major portion of the reactor coolant pressure boundary. This chapter of the Updated Safety Analysis Report provides information regarding the reactor coolant system and pressure-containing appendages out to and including isolation valving. This grouping of components is defined as the reactor coolant pressure boundary (RCPB) as follows:

Reactor coolant pressure boundary (RCPB) includes all pressure-containing components such as pressure vessels, piping, pumps, and valves, which are:

(1) Part of the reactor coolant system, or

(2) Connected to the reactor coolant system, up to and including any and all of the following:

a. The outermost containment isolation valve in piping which penetrates primary reactor containment,

b. The second of the two valves normally closed during normal reactor operation in system piping which does not penetrate primary reactor containment,

c. The reactor coolant system safety/relief valve piping.

This chapter also deals with various subsystems to the RCPB which are closely allied to it. Specifically, section 5.4 deals with these subsystems.

The nuclear system pressure relief system protects the reactor coolant pressure boundary from damage due to overpressure. To protect against overpressure, pressure-operated relief valves are provided that can discharge steam from the nuclear system to the suppression pool. The pressure relief system also acts to automatically depressurize the nuclear system in the event of a loss-of-coolant accident in which the high pressure core spray (HPCS) system fails to maintain reactor vessel water level. Depressurization of the nuclear system allows the low pressure core cooling systems to supply enough cooling water to adequately cool the fuel.

"Detection of Leakage Through Reactor Coolant Pressure Boundary," in subsection 5.2.5, establishes the limits on nuclear system leakage inside the drywell so that appropriate action can be taken before the integrity of the nuclear system process barrier is impaired.

The reactor vessel and appurtenances are described in the "Reactor Vessel," section 5.3. The major safety consideration for the reactor vessel is the ability of the vessel to function as a radioactive material barrier. Various combinations of loading are considered in the vessel design. The vessel meets the requirements of applicable codes and criteria. The possibility of brittle fracture is considered, and suitable design, material selection, material surveillance activity and operational limits are established that avoid conditions where brittle fracture is possible.

The reactor recirculation system provides coolant flow through the core. The recirculation system is designed to provide a slow coastdown of flow so that fuel thermal limits cannot be exceeded as a result of recirculation system malfunctions. The arrangement of the recirculation system routing is such that a piping failure cannot compromise the integrity of the floodable inner volume of the reactor vessel.

The main steam line flow restrictors of the venturi-type are installed in each main steam line inside the primary containment. The restrictors are designed to limit the loss of coolant resulting from a main steam line break outside the primary containment. The coolant loss is limited so that reactor vessel water level remains above the top of the core during the time required for the main steam line isolation valves to close. This action protects the fuel barrier.

Two isolation valves are installed on each main steam line; one is located inside, and the other is located outside the primary containment. In the event that a main steam line break occurs inside the containment, closure of the isolation valve outside the primary containment acts to seal the primary containment itself. The main steam line isolation valves automatically isolate the reactor coolant pressure boundary in the event a pipe break occurs downstream of the inboard isolation valves. This action limits the loss of coolant and the release of radioactive materials from the nuclear system.

The reactor core isolation cooling (RCIC) system provides makeup water to the core during a reactor shutdown in which feedwater flow is not available. The system is started automatically upon receipt of a low reactor water level signal or manually by the operator. Water is pumped to the core by a turbine-pump driven by reactor steam.

The residual heat removal (RHR) system includes a number of pumps and heat exchangers that can be used to cool the nuclear system under a variety of situations. During normal shutdown and reactor servicing, the RHR system removes residual and decay heat. The RHR system allows decay heat to be removed whenever the main heat sink (main condenser) is not available (e.g., hot standby). One mode of RHR operation allows the removal of heat from the primary containment following a loss of coolant accident. Another operational mode of the RHR system is low pressure coolant injection (LPCI). LPCI operation is an engineered safety feature for use during a postulated loss-of coolant accident. This operation is described in section 6.3, "Emergency Core Cooling Systems." The low pressure core spray system (LPCS) also provides protection to the nuclear system.

The reactor water cleanup system recirculates a portion of reactor coolant through a filter-demineralizer to remove particulate and dissolved impurities from the reactor coolant. It also removes excess coolant from the reactor system under controlled conditions.

Design and performance characteristics of the Reactor Coolant System and its various components will be found in Table 5.4-1.

5.1.1 Schematic Flow Diagram

Schematic flow diagrams of the reactor coolant system denoting all major components, principal pressures, temperatures, flow rates, and coolant volumes for normal steady-state operating conditions at rated power are presented in Figures 5.1-1 and 5.1-2.

5.1.2 Piping and Instrumentation Diagram

Piping and instrumentation diagrams covering the systems included within the reactor coolant system and connected systems are presented in the following:

(1) the nuclear boiler system shown on Drawing 796E724,

(2) main steam shown on Drawing M05-1002;

(3) feedwater shown on Drawing M05-1004;

(4) recirculation system shown on Drawing M05-1072;

(5) reactor core isolation cooling system shown on Drawing M05-1079;

(6) residual heat removal system shown on Drawing M05-1075;

(7) reactor water cleanup system shown on Drawing M05-1076.

5.1.3 Elevation Drawings

Elevation drawings showing the principal dimensions of the reactor coolant system in relation to the supporting and surrounding concrete structures are shown in Drawings M01-1111-4 and M01-1112-4.

5.2 INTEGRITY OF REACTOR COOLANT PRESSURE BOUNDARY

This section discusses measures employed to provide and maintain the integrity of the reactor coolant pressure boundary (RCPB) for the plant design lifetime.

5.2.1 Compliance with Codes and Code Cases

5.2.1.1 Compliance with 10 CFR Part 50, Section 50.55a

Compliance with the rules of 10 CFR Part 50 "Codes and Standards" is included in Table 3.2-4. Code edition, applicable addenda, and component dates are in accordance with 10 CFR 50.55a.

5.2.1.2 Applicable Code Cases

The reactor pressure vessel and appurtenances, and the RCPB piping, pumps and valves, have been designed, fabricated, and tested in accordance with the applicable edition of the ASME Code, including addenda that were mandatory at the order date for the applicable components. Section 50.55a of 10 CFR Part 50 requires code case approval only for Class 1 components. These code cases contain requirements or special rules which may be used for the construction of pressure-retaining components of Quality Group Classification A. The various ASME code cases that were applied to components in the RCPB are listed in Table 5.2-1.

A. Regulatory Guides 1.84 and 1.85

General Compliance or Alternative Approach Assessment:

For commitment, revision number, and scope see section 1.8.

These guides provide a list of ASME Design and Fabrication Code Cases that have been generically approved by the Regulatory Staff. Code Cases on this list may, for design purposes, be used until appropriately annulled. Annulled cases are considered "active" for equipment that has been contractually committed to fabrication prior to the annulment.

GE's procedure for meeting the regulatory requirements is to obtain NRC approval for Code Cases applicable to Class 1 components only. NRC approval of Class 2 and 3 Code Cases was not required at the time of the design of Clinton and is not required by 10CFR50.55a.

All class 2 and 3 equipment has been designed to ASME code or ASME approved Code Cases. This provision together with the Quality Control programs provide adequate safety equipment functional assurances.

5.2.2 Overpressure Protection

This section provides evaluation of the systems that protect the RCPB from overpressurization.

5.2.2.1 Design Basis

Overpressure protection is provided in conformance with 10 CFR 50, Appendix A, General Design Criterion 15. Preoperational and startup instructions are given in Chapter 14.

5.2.2.1.1 Safety Design Bases

The nuclear pressure-relief system has been designed:

(1) To prevent overpressurization of the nuclear system that could lead to the failure of the reactor coolant pressure boundary.

(2) To provide automatic depressurization for small breaks in the nuclear system occurring with maloperation of the high pressure core spray (HPCS) system so that the low pressure coolant injection (LPCI) and the low pressure core spray (LPCS) systems can operate to protect the fuel barrier.

(3) To permit verification of its operability.

(4) To withstand adverse combinations of loadings and forces resulting from normal, upset, emergency, or faulted conditions.

5.2.2.1.2 Power Generation Design Bases

The nuclear pressure relief system safety/relief valves have been designed to meet the following power generation bases:

(1) Discharge to the containment suppression pool.

(2) Correctly reclose following operation so that maximum operational continuity can be obtained.

5.2.2.1.3 Discussion

The ASME Boiler and Pressure Vessel Code requires that each vessel designed to meet Section III be protected from overpressure under upset conditions. The code allows a peak allowable pressure of 110% of vessel design pressure under upset conditions. The code specifications for safety valves require that: (1) the lowest safety valve be set at or below vessel design pressure and (2) the highest safety valve be set so that total accumulated pressure does not exceed 110% of the design pressure for upset conditions. The safety/relief valves are designed to open via either of two modes of operation:

automatically using a pneumatic power actuator or by self-actuation in the spring lift mode.

The safety/relief valve setpoints are listed in Table 5.2-2. These setpoints satisfy the ASME Code specifications for safety valves, because all valves open at less than the nuclear system design pressure of 1250 psig.

The automatic depressurization capability of the nuclear system pressure relief system is evaluated in section 6.3, “Emergency Core Cooling Systems,” and in section 7.3, “Engineered Safety Feature Systems.”

The following detailed criteria are used in selection of relief valves:

(1) Must meet requirements of ASME Code, Section III;

(2) Must qualify for 100% of nameplate capacity credit for the overpressure protection function;

(3) Must meet other performance requirements such as response time, etc., as necessary to provide relief functions.

The safety/relief valve discharge piping is designed, installed, and tested in accordance with the ASME Code, Section III.

5.2.2.1.4 Safety Valve Capacity

The safety valve capacity of this plant is adequate to limit the primary system pressure, including transients, to the requirements of the ASME Boiler and Pressure Vessel Code, Section III, Nuclear Power Plant Components, Division 1, 1971 Edition with Addenda up to and including Summer 1973. The essential ASME requirements which are all met by this analysis are as follows:

It is recognized that the protection of vessels in a nuclear power plant is dependent upon many protective systems to relieve or terminate pressure transients. Installation of pressure relieving devices may not independently provide complete protection. The safety valve sizing evaluation assumes credit for operation of the scram protective system which may be tripped by either one of two sources; i.e., a direct or flux trip signal. The direct scram trip signal is derived from position switches mounted on the main steamline isolation valves or the turbine stop valves or from pressure switches mounted on the dump valve of the turbine control valve hydraulic actuation system. The position switches are actuated when the respective valves are closing and following 10% travel of full stroke. The pressure switches are actuated when a fast closure of the turbine control valves is initiated. Credit is taken for 50% of the total installed safety/relief valve capacity operating via the power operated mode as permitted by ASME III. Credit is also taken for the remaining safety/relief valve capacity which opens via the spring mode of operation direct from inlet pressure.

The rated capaity of the pressure relieving devices shall be sufficient to prevent a rise in pressure within the protected vessel of more than 110% of the design pressure (1.10 x 1250 psig = 1375 psig) for events defined in subsection 15.2.

Full account is taken of the pressure drop on both the inlet and discharge sides of the valves. All combination safety/relief valves discharge into the suppression pool through a discharge pipe from each valve which is designed to achieve sonic flow conditions through the valve, thus providing flow independence to discharge piping losses.

Table 5.2-7 lists the systems which could initiate during the design basis overpressure event.

5.2.2.2 Design Evaluation

5.2.2.2.1 Method of Analysis

To design the pressure protection for the nuclear boiler system, extensive analytical models representing all essential dynamic characteristics of the system are simulated on a large computing facility. These models include the hydrodynamics of the flow loop, the reactor

kinetics, the thermal characteristics of the fuel and its transfer of heat to the coolant, and all the principal controller features, such as feedwater flow, recirculation flow, reactor water level, pressure, and load demand. These are represented with all their principal nonlinear features in models that have evolved through extensive experience and favorable comparison of analysis with actual BWR test data.

A detailed description of this model is documented in licensing topical report NEDO-10802, "Analytical Methods of Plant Transient Evaluations for the GE-BWR," R. B. Linford, (Reference 1). Safety/relief valves are simulated in a nonlinear representation, and the model thereby allows full investigation of the various valve response times, valve capacities, and actuation setpoints that are available in applicable hardware systems.

Typical valve characteristics as modeled are shown in Figures 5.2-2A and 5.2-2B for the power-activated relief and spring-action safety modes of the dual purpose safety/relief valves. The associated bypass, turbine control valve, and main steam isolation valve characteristics are also simulated in the model.

5.2.2.2.2 Systems Design

A parametric study was conducted to determine the required steam flow capacity of the safety/relief valves based on the following assumptions.

5.2.2.2.2.1 Operating Conditions

Operating conditions for the initial cycle performance were as follows:

(1) operating power = 3015 MWt (104.2% of nuclear boiler rated power),

(2) vessel dome pressure = 1045 psig, and

(3) steamflow = 13.076 x 10^6 lb/hr (105% of nuclear boiler rated steamflow)

Operating conditions for cycle performance with extended power uprate (EPU) are as follows:

(1) operating power = 3543 MWt (102% of nuclear boiler rated power),

(2) vessel dome pressure less than or equal to 1045.3 psig, and

(3) steam flow = 15.52 x 10^6 lb/hr (102% of nuclear boiler rated steamflow)

These conditions are the most severe because maximum stored energy exists at these conditions. At lower power conditions the transients would be less severe.

5.2.2.2.2.2 Transients

The overpressure protection system must accommodate the most severe pressurization transient. There are two major transients, the closure of all main steam line isolation valves and a turbine/generator trip with a coincident closure of the turbine steam bypass system valves that represent the most severe abnormal operational transients resulting in a nuclear system pressure rise. The evaluation of transient behavior with final plant configuration has shown that the isolation valve closure is slightly more severe when credit is taken only for indirect derived

scrams, therefore, it is used as the overpressure protection basis event and shown in Figure 5.2-1. Table 5.2-10 lists the sequence of events for the main steam line isolation valve closure event with flux scram (performed for the initial cycle) and with the installed safety/relief valve capacity.

The transient response for the current reload cycle is provided in Appendix 15D, Reload Analysis.

5.2.2.2.2.3 Scram

(1) scram reactivity curve - Figure 5.2-3A

(2) control rod drive scram motion - Figure 5.2-3B

5.2.2.2.2.4 Safety/Relief Valve Transient Analysis Specification

(1) simulated valve groups:
power-actuated relief mode - 3 groups
spring-action safety mode - 3 groups

(2) pressure setpoint (maximum safety limit):
power-actuated relief mode

group 1	1125 psig
group 2	1135 psig
group 3	1145 psig
group 4	1155 psig

spring action safety mode

group 1	1175 psig
group 2	1195 psig
group 3	1215 psig

The above analysis input set points are assumed at a conservatively high level above the normal set points. This is to account for initial set point errors and any instrument set point drift that might occur during operation. Typically the assumed set points in the analysis are 1 to 2 % above the actual nominal set points as shown in Table 5.2-2. High conservative safety relief/valve response characteristics are also assumed.

5.2.2.2.2.5 Safety/Relief Valve Capacity

Sizing of the safety/relief valve capacity is based on establishing an adequate margin from the peak vessel pressure to the vessel code limit (1375 psig) in response to the reference transients.

The method used to determine total valve capacity is described as follows:

Whenever system pressure increases to the relief pressure set point of a group of valves having the same set point, half of those valves are assumed to operate in the relief

mode, opened by the pneumatic power actuation. When the system pressure increases to the valve spring set pressure of a group of valves, those valves not already considered open are assumed to begin opening and to reach full open at 103% of the valve spring set pressure.

5.2.2.2.3 Evaluation of Results

5.2.2.2.3.1 Safety/Relief Valve Capacity

For the evaluation of SRV safety-mode setpoint tolerance relaxation to ±3% and 2 SRV's out-of-service, refer to Reference 8. Note that the information provided in this chapter is from baseline analysis performed in support of initial cycle operation.

The required safety/relief valve capacity is determined by analyzing the pressure rise from a MSIV closure with flux scram transient. The plant is assumed to be operating at the turbine-generator design conditions at a maximum vessel dome pressure of 1045 psig. The analysis hypothetically assumes the failure of the direct isolation valve position scram. The reactor is shut down by the backup, indirect, high neutron flux scram. For the initial cycle analysis, the power-actuated relief set points of the safety/relief valve are assumed to be in the range of 1125 to 1155 psig and the spring-action safety set points to be in the range of 1175 to 1215 psig. The analysis indicates that the design valve capacity is capable of maintaining adequate margin below the peak ASME code allowable pressure in the nuclear system (1375 psig). Figure 5.2-1 shows curves produced by this initial cycle analysis (Reference 6). The sequence of events in Table 5.2-10 assumed in this initial cycle analysis was investigated to meet code requirements and to evaluate the pressure relief system exclusively. The results of the overpressurization analysis for the current cycle are provided in Appendix 15D, Reload Analysis.

Under the General Requirements for Protection Against Overpressure as given in section III of the ASME Boiler and Pressure Vessel Code, credit can be allowed for a scram from the reactor protection system. In addition, credit is also taken for the protective circuits which are indirectly derived when determining the required safety/relief valve capacity. The backup reactor high neutron flux scram is conservatively applied as a design basis in determining the required capacity of the pressure relieving dual purpose safety/relief valves. Application of the direct position scrams in the design basis could be used since they qualify as acceptable pressure protection devices when determining the required safety/relief valve capacity of nuclear vessels under the provisions of the ASME code. The safety/relief valves are operated in a relief mode (pneumatically) at set points lower than those specified for the safety function. This ensures sufficient margin between anticipated relief mode closing pressures and valve spring forces for proper seating of the valves.

The parametric relationship between peak vessel (bottom) pressure and safety/relief valve capacity for the MSIV transient with high flux scram is described in Figure 5.2-4. Also shown in Figure 5.2-4 is the parametric relationship between peak vessel (bottom) pressure and safety/relief valve capacity for the generator load rejection with a coincident closure of the turbine bypass valves and direct scram, which is the most severe transient when direct scram is considered. Pressures shown for flux scram will result only with multiple failure in the redundant direct scram system.

The time response of the vessel pressure to the MSIV transient with flux scram and the generator load rejection with a coincident closure of the turbine bypass valves and direct scram for 16 valves is illustrated in Figure 5.2-5. This shows that the pressure at the vessel bottom

exceeds 1250 psig for less than 5 seconds which is not long enough to transfer any appreciable amount of heat into the vessel metal which was at a temperature well below 550°F at the start of the transient.

5.2.2.2.3.2 Low-Low Set Relief Function

In order to assure that no more than one relief valve reopens following a reactor isolation event, two valves are provided with lower opening and closing setpoints and three valves with lower closing setpoints. On initial relief mode actuation of any safety/relief valve (SRV), these setpoints override the normal setpoints and act to hold open these valves longer, thus preventing more than a single valve from reopening subsequently. This system logic is referred to as the low-low set relief logic and functions to ensure that the containment design basis of one safety/relief valve operating on subsequent actuations is met.

The low-low set logic is armed from the existing pressure sensors of the low normal relief setpoint SRV or the second normal relief setpoint group of SRVs or the high normal relief setpoint group of SRVs. Thus, the low-low set valves will not actuate during normal plant operation even though the reopening setpoints of one of the valves is in the normal operating pressure range. This arming method results in the low-low set safety/relief valves opening initially during an overpressure transient at the normal relief opening setpoint.

The lowest setpoint low-low set valve will cycle to remove decay heat. Table 5.2-2 shows the opening and closing setpoints for the low-low set safety/relief valves. The assumptions used in the calculation of the pressure transient after the initial opening of the relief valves are:

a. The transient event is a 3-second closure of all MSIV's with position scram.

b. Nominal relief valve setpoints are used.

c. The maximum expected relief capacity is used.

d. Relief valve opening times shown in Figure 5.2-7b are used.

e. The closing setpoint of the relief valves is 100 psi below the opening setpoint.

f. ANS + 20% decay heat at infinite exposure is used.

The results using the above assumptions are shown in the reactor vessel pressure transient curve in Figure 5.2-7a. Despite the conservative input assumptions which tend to maximize the pressure peaks on subsequent actuations, there is a 72 psi margin for avoiding the second pop of more than one valve. The system is single failure proof since a failure of one of the low-low set valves still gives a 40 psi margin for avoiding multiple valve actuations. See Table 5.2-2 for the setpoints of the low-low set valves.

The safety/relief valves are balanced, spring loaded, and provided with an auxiliary power-actuated device which allows opening of the valve even when pressure is less than the safety-set pressure on the valve. Previous undesirable performance on operating BWR's was associated principally with multiple stage pilot operated safety/relief valves shown in Figure 5.2-15. These newer, power-operated safety/relief valves employ significantly fewer moving parts wetted by the steam and are, therefore, considered an improvement over the ones previously used.

5.2.2.2.3.3 Pressure Drop in Inlet and Discharge

Pressure drop on the piping from the reactor vessel to the valves is taken into account in calculating the maximum vessel pressures. Pressure drop in the discharge piping to the suppression pool is limited by proper discharge line sizing to prevent backpressure on each safety/relief valve from reducing valve capacity below the nameplate rating due to the discharge piping. Each safety/relief valve has its own separate discharge line.

5.2.2.3 Piping & Instrument Diagrams

The schematic arrangements of the pressure - relieving devices for the reactor coolant system, which are the safety/relief valves, are shown in Drawing 796E724, sheet 6, and Figure 5.2-8. The schematic representation of the blowdown/heat dissipation system connected to the discharge side of these pressure relieving devices is shown on Drawing M05-1002, sheet 6.

5.2.2.4 Equipment and Component Description

5.2.2.4.1 Description

The nuclear pressure relief system consists of safety/relief valves located on the main steam lines between the reactor vessel and the first isolation valve within the drywell. These valves protect against overpressure of the nuclear system.

The safety/relief valves provide three main protection functions:

(1) Overpressure relief operation. The valves open automatically to limit a pressure rise.

(2) Overpressure safety operation. The valves function as safety valves and open (self-actuated operation if not already automatically opened for relief operation) to prevent nuclear system overpressurization.

(3) Depressurization operation. The ADS valves open automatically as part of the emergency core cooling system (ECCS) for events involving small breaks in the nuclear system process barrier. The location and number of the ADS valves can be determined from Drawing 796E724, sheet 6.

Chapter 15 discusses the events which are expected to activate the primary system safety/relief valves. The section also summarizes the number of valves expected to operate during the initial blowdown of the valves and the expected duration of this first blowdown. For several of the events it is expected that the lowest set safety/relief valve will reopen and reclose as generated heat drops into the decay heat characteristics. The pressure increase and relief cycle will continue with lower frequency and shorter relief discharges as the decay heat drops off and until such time as the RHR system can dissipate this heat. Remote manual actuation of the valves from the control room is recommended to minimize the total number of these discharges, with the intent of achieving extended valve seat life.

A schematic of the safety/relief valve is shown in Figure 5.2-10. It is opened by either of two modes of operation:

(1) The spring mode of operation which consists of direct action of the steam pressure against a spring-loaded disk that will pop open when the valve inlet pressure force exceeds the spring force.

(2) The power actuated mode of operation which consists of using an auxiliary actuating device consisting of a pneumatic piston/cylinder and mechanical linkage assembly which opens the valve by overcoming the spring force, even with valve inlet pressure equal to zero psig.

The pneumatic operator is so arranged that if it malfunctions it will not prevent the valve disk from lifting if steam inlet pressure reaches the spring lift set pressure.

For overpressure safety relief valve operation (self-actuated or spring lift mode), the spring load establishes the safety valve opening setpoint pressure and is set to open at setpoints designated in Table 5.2-2. In accordance with the ASME code, the full lift of this mode of operation is attained at a pressure no greater than 3% above the setpoint.

The safety function of the safety/relief valve is a backup to the relief function described below. The spring-loaded valves are designed and constructed in accordance with ASME III, NB 7640 as safety valves with auxiliary actuating devices.

For overpressure relief valve operation (power actuated mode), each valve is provided with a pressure sensing device which operates at the setpoints designated in Table 5.2-2. When the set pressure is reached, it operates a solenoid air valve which in turn actuates the pneumatic piston/cylinder and linkage assembly to open the valve.

When the piston is actuated, the delay time, maximum elapsed time between receiving the overpressure signal at the valve actuator and the actual start of valve motion, will not exceed 0.1 seconds. The maximum elapsed time between signal to actuator and full open position of valve will not exceed 0.2 seconds.

The safety/relief valves can be operated in the power actuated mode by remote-manual controls from the main control room.

Actuation of either solenoid A or solenoid B on the safety/relief valve will cause the safety/relief valve to open, hence, there is no single failure of a logic component or safety/relief valve solenoid valve which would result in failure of the main valve to open. The trip units, see Drawing 796E724, for each safety/relief valve within each division are in series, and failure of one of the transmitters shown on Drawing 796E724 will not cause the safety/relief valves to open. Each safety/relief valve is provided with its own pneumatic accumulator and inlet check valve. The accumulator capacity is sufficient to provide one safety/relief valve actuation, which is all that is required for overpressure protection. Subsequent actuations for an overpressure event can be spring actuations to limit reactor pressure to acceptable levels.

The safety/relief valves are qualified to operate to the extent required for overpressure protection in the following accident environments*:

(1) 340ºF for 3 hours at drywell pressure ≤ 45 psig

(2) 320ºF for an additional 3 hour period, at drywell pressure ≤ 45 psig

(3) 250ºF for an additional 18 hour period, at 25 psig

(4) Then the duration of operability is 2 days at 200° F and 20 psig, following which the valves will remain fully closed for 97 days or fully open provided air and power supply is available.

The Automatic Depressurization System (ADS) utilizes selected safety/relief valves for depressurization of the reactor as described in Section 6.3, "Emergency Core Cooling System." Each of the safety/relief valves utilized for automatic depressurization is equipped with an air accumulator and check valve arrangement. The ADS pneumatic supply is split into two divisions. One supplies to the ADS valves on steamlines "A" and "C"; the other supplies to the ADS valves on steamlines "B" and "D". The air supply piping and equipment for the safety/relief valves from the inside containment isolation valve to the accumulators is designed to the requirements of ASME section III class 3 and is Seismic Category I. The air supply from the outside containment isolation valve to the air bottle tank farm is Seismic Cat. I, class 3 except for the air bottle tank farm and air filter which are Seismic Category I, class other. The air bottles are designed to DOT Specification 3AA requirements. The accumulators and air bottle tank farms assure that the valves can be held open following failure of the normal air supply to the accumulators. They are sized to be capable of opening the valves and holding them open against the drywell design pressure of 30 psig. The accumulator capacity is sufficient for each ADS valve to provide two actuations against 70% of drywell design pressure (21 psig). The capacity of the air bottle tank farms is sufficient to account for system leakage in order to allow the valves to remain open for a minimum period of 2 days without replenishment. If the non-safety-related air supply is unavailable for longer than 2 days, the air bottles and accumulators can be recharged via a connection outside the south wall of the Diesel Generator building.

Each safety/relief valve discharges steam through a discharge line to a point below the minimum water level in the suppression pool. The safety/relief valve discharge lines are classified as Quality Group C and Seismic Category I. Safety/relief valve discharge line piping from the safety/relief valve to the suppression pool consists of two parts. The first is attached at one end to the safety/relief valve and attached at its other end to a pipe anchor. The main steam piping, including this portion of the safety/relief valve discharge piping, is analyzed as a complete system.

The second part of the safety/relief valve discharge piping extends from the anchor to the suppression pool. Because of the upstream anchor on this part of the line, it is physically decoupled from the main steam header and is therefore analyzed as a separate piping system.

---

* The qualification environments have an additional conservatism over the predicted worst-case environments given in Table 3.11-6 because of the desired general applicability to both BWR5 and BWR6 safety/relief valves.

As a part of the preoperational and startup testing of the main steam lines, movement of the safety/relief valve discharge lines was monitored.

The safety/relief valve discharge piping is designed to limit valve outlet pressure to 40% of maximum valve inlet pressure with the valve wide open. Water in the line more than a few feet above suppression pool water level would cause excessive pressure at the valve discharge when the valve is again opened. For this reason, two vacuum relief valves are provided on each safety/relief valve discharge line to prevent drawing an excessive amount of water up into the line as a result of steam condensation following termination of relief operation. The safety/relief valves are located on the main steam line piping, rather than on the reactor vessel top head, primarily to simplify the discharge piping to the pool and to avoid the necessity of having to remove sections of this piping when the reactor head is removed for refueling. In addition, valves located on the steam lines are more accessible during a shutdown for valve maintenance.

The nuclear pressure relief system automatically depressurizes the nuclear system sufficiently to permit the LPCI and LPCS systems to operate as a backup for the high pressure core spray (HPCS) system. Further descriptions of the operation of the automatic depressurization feature are found in section 6.3, "Emergency Core Cooling Systems," and in subsection 7.3.1.1.1, "Emergency Core Cooling Systems Instrumentation and Controls."

5.2.2.4.2 Design Parameters

The specified operating transients for components within the RCPB are given in subsection 3.9.1. Refer to section 3.7 for discussion of the input criteria for design of Seismic Category I structures, systems, and components.

The design requirements established to protect the principal components of the reactor coolant system against environmental effects are discussed in section 3.11.

5.2.2.4.2.1 Safety/Relief Valve

The discharge area of the valve is 18.4 square inches and the coefficient of discharge K(D) is equal to 0.873 (K = 0.9 K(D)).

The design pressure and temperature of the valve inlet and outlet are 1375 psig @ 585°F and 625 psig @ 500°F, respectively.

The valves have been designed to achieve the maximum practical number of actuations consistent with state-of-the-art technology.

The safety/relief valves and appurtenances are designed to withstand 60 operating cycles at design temperature and pressure during each time period between valve refurbishing.

See Figure 5.2-10 for a schematic cross section of the valve.

5.2.2.5 Mounting of Pressure Relief Devices

The pressure relief devices are located on the main steam piping header. The mounting consists of a special contour nozzle and an over-sized flange connection. This provides a high

integrity connection that withstands the thrust, bending and torsional loadings to which the main steam pipe and relief valve discharge pipe are subjected. This includes:

(1) The thermal expansion effects of the connecting piping.

(2) The dynamic effects of the piping due to SSE.

(3) The reactions due to transient unbalanced wave forces exerted on the safety/relief valves during the first few seconds after the valve is opened and prior to the time steady-state flow has been established. (With steady-state flow, the dynamic flow reaction forces will be self-equilibrated by the valve discharge piping.)

(4) The dynamic effects of the piping and branch connection due to the turbine stop valve closure.

In no case are allowable valve flange loads exceeded nor does the stress at any point in the piping exceed code allowables for any specified combination of loads. The design criteria and analysis methods for considering loads due to SRV discharge is contained in subsection 3.9.3.3.

5.2.2.6 Applicable Codes and Classification

The vessel overpressure protection system is designed to satisfy the requirements of Section III of the ASME Boiler and Pressure Vessel Code. The general requirements for protection against overpressure of Section III of the Code recognize that reactor vessel overpressure protection is one function of the reactor protective systems and allows the integration of pressure relief devices with the protective systems of the nuclear reactor. Hence, credit is taken for the scram protective system as a complementary pressure protection device. The NRC has also adopted the ASME Codes as part of their requirements in the Code of Federal Regulations (10 CFR 50.55A).

5.2.2.7 Material Specification

Material specifications of pressure retaining components of safety/relief valves are reported in Table 5.2-4.

5.2.2.8 Process Instrumentation

Overpressure protection process instrumentation is shown on the P&ID 796E724.

5.2.2.9 System Reliability

The system is designed to satisfy the requirements of Section III of the ASME Boiler & Pressure Vessel Code. Therefore, it has high reliability. The consequences of failure are discussed in Section 15.1.4 and 15.6.1.

5.2.2.10 Inspection and Testing

The inspection and testing applicable to safety/relief valves utilizes a quality assurance program which complies with Appendix B of 10 CFR 50.

The safety/relief valves are tested at the vendor's shop in accordance with quality control procedures to detect defects and to prove operability prior to installation. The following tests are conducted:

(1) Hydrostatic test at specified test conditions.

(2) Seat leakage measurements are made with steam during the set pressure test.

(3) Set pressure test: valve pressurized with saturated steam, with the pressure rising to the valve set pressure. Valve must open at nameplate set pressure ±1%.

(4) Response time test: each safety/relief valve tested to demonstrate acceptable response time.

The valves are installed as received from the factory. The GE equipment specification requires certification from the valve manufacturer that design and performance requirements have been met. This includes capacity and blowdown requirements. The set points are adjusted, verified, and indicated on the valves by the vendor. Specified manual and automatic actuation relief mode of each safety/relief valve was verified during the preoperational test program.

It is not feasible to test the safety/relief valve set points while the valves are in place. The valves are mounted on 1500-1b primary service rating flanges. They can be removed for maintenance or bench checks and reinstalled during normal plant shutdowns. The valves will be tested to check set pressure in accordance with the requirements of the plant technical specifications. The external surface and seating of all safety/relief valves are 100% visually inspected when the valves are removed for maintenance or bench checks. Valve operability was verified during the preoperational test program as discussed in Chapter 14.

5.2.3 Reactor Coolant Pressure Boundary Materials

5.2.3.1 Material Specifications

Table 5.2-4 lists the principal pressure retaining materials and the appropriate material specifications for the reactor coolant pressure boundary components.

5.2.3.2 Compatibility with Reactor Coolant

5.2.3.2.1 PWR Chemistry of Reactor Coolant

Not applicable to BWRs.

5.2.3.2.2 BWR Chemistry of Reactor Coolant

Materials in the primary system are primarily austenitic stainless steel and Zircaloy cladding. The reactor water chemistry limits are established to provide an environment favorable to these materials. Limits are placed on conductivity and chloride concentrations. Conductivity is limited because it can be continuously and reliably measured and gives an indication of abnormal conditions and the presence of unusual materials in the coolant. Chloride limits are specified to prevent stress corrosion cracking of stainless steel. For further information, see Reference 2.

Several investigations have shown that in neutral solutions some oxygen is required to cause stress corrosion cracking of stainless steel, while in the absence of oxygen no cracking occurs. One of these is the chloride-oxygen relationship of Williams, (Reference 3), where it is shown that at high chloride concentration little oxygen is required to cause stress corrosion cracking of stainless steel, and at high oxygen concentration little chloride is required to cause cracking. These measurements were determined in a wetting and drying situation using alkaline-phosphate-treated boiler water and, therefore, are of limited significance to BWR conditions. They are, however a qualitative indication of trends.

The water quality requirements are further supported by General Electric stress corrosion test data summarized as follows:

(1) Type 304 stainless steel specimens were exposed in a flowing loop operating at 537°F. The water contained 1.5 ppm chloride and 1.2 ppm oxygen at pH 7. Test specimens were bent beam strips stressed over their yield strength. After 2100 hours exposure, no cracking or failures occurred.

(2) Welded Type-304 stainless steel specimens were exposed in a refreshed autoclave operating at 550°F. The water contained 0.5 ppm chloride and 1.5 ppm oxygen at pH 7. Uniaxial tensile test specimens were stressed at 125% of their 550°F yield strength. No cracking or failures occurred at 15,000 hours exposure.

When conductivity is in its normal range, pH, chloride and other impurities affecting conductivity will also be within their normal range. When conductivity becomes abnormal, chloride measurements are made to determine whether or not they are also out of their normal operating values. This would not necessarily be the case. Conductivity could be high due to the presence of a neutral salt which would not have an effect on pH or chloride. In such a case, high conductivity alone is not a cause for shutdown. In some types of water-cooled reactors, conductivities are high because of the purposeful use of additives. In BWRs, however, where no additives are used and where near neutral pH is maintained, conductivity provides a good and prompt measure of the quality of the reactor water. Significant changes in conductivity provide the operator with a warning mechanism so he can investigate and remedy the condition before reactor water limits are reached. Methods available to the operator for correcting the off-standard condition include operation of the reactor cleanup system, reducing the input of impurities, and placing the reactor in the cold shutdown condition. The major benefit of cold shutdown is to reduce the temperature dependent corrosion rates and provide time for the cleanup system to reestablish the purity of the reactor coolant.

The following is a summary and description of BWR water chemistry for various plant conditions.

(1) Normal Plant Operation

The BWR system water chemistry is conveniently described by following the system cycle as shown on Figure 5.2-11. Reference to Table 5.2-6 has been made as numbered on the diagram and correspondingly in the table.

For normal operation starting with the condenser-hotwell, condensate water is processed through a condensate treatment system. This process consists of

filtration and demineralization, resulting in effluent water quality represented in Table 5.2-6.

Hydrogen is injected into the condensate booster pump suction header to mitigate intergranular stress corrosion cracking in the reactor vessel internals and recirculation piping. The Hydrogen Water Chemistry (HWC) system is described in Section 5.4.15.

The effluent from the condensate treatment system is pumped through the feedwater heater train, and enters the reactor vessel at an elevated temperature and with a chemical composition typically as shown in Table 5.2-6.

A small amount of depleted zinc oxide (DZO) is injected into the feedwater during normal operation via the General Electric zinc injection passivation (GEZIP) system. The system consists of a simple passive recirculation loop off the feedwater piping. A stream of feedwater from the feedwater pump discharge is passed through the GEZIP skid zinc disolution column which contains pelletized DZO. The feedwater dissolves the pellets as it passes through the zinc vessel carrying the dissolved DZO back into the feedwater pump suction. This process maintains trace quantities of ionic zinc in the reactor water for the purpose of reducing radiation buildup on the primary system surfaces.

During normal plant operation, boiling occurs in the reactor, decomposition of water takes place due to radiolysis, and oxygen and hydrogen gases are formed. Due to steam generation, stripping of these gases from the water phase takes place, and the gases are carried with the steam through the turbine to the condenser. The oxygen level in the steam, resulting from this stripping process, is typically observed to be about 20 ppm (see Table 5.2-6). At the condenser, deaeration takes place and the gases are removed from the process by means of steam jet air ejectors (SJAEs). The deaeration is completed to a level of approximately 20 ppb (0.02 ppm) oxygen in the condensate and oxygen injection is provided to maintain this level.

The dynamic equilibrium in the reactor vessel water phase established by the steam-gas stripping and the radiolytic formation (principally) rates, corresponds to a nominal value of approximately 200 ppb (0.2 ppm) of oxygen at rated operating conditions. Slight variations around this value have been observed as a result of differences in neutron flux density, coreflow and recirculation flow rate.

A reactor water cleanup system is provided for removal of impurities resulting from fission products and corrosion products formed in the primary system. The cleanup process consists of filtration and ion exchange, and serves to maintain a high level of water purity in the reactor coolant.

Typical chemical parametric values for the reactor water are listed in Table 5.2-6 for various plant conditions.

Additional water input to the reactor vessel originates from the Control Rod Drive (CRD) cooling water. The CRD water is approximately feedwater quality. Separate filtration for purification and removal of insoluble corrosion products

takes place within the CRD system prior to entering the drive mechanisms and reactor vessel.

No other inputs of water are present during normal plant operation. During plant conditions other than normal operation additional inputs and mechanisms are present as outlined in the following section.

(2) Plant Conditions Outside Normal Operation

During periods of plant conditions other than normal power production, transients take place, particularly with regard to the oxygen levels in the primary coolant. Oxygen levels in the primary coolant will vary from the normal during plant startup, plant shutdown, hot standby, and when the reactor is vented and depressurized. The hotwell condensate will absorb oxygen from the air when vacuum is broken on the condenser. Prior to startup and input of feedwater to the reactor, vacuum is established in the condenser and deaeration of the condensate takes place by means of mechanical vacuum pump and steam jet air ejector (SJAE) operation and condensate recirculation. During these plant conditions, continuous input of control rod drive (CRD) cooling water takes place as described previously.

a. Plant Depressurized and Reactor Vented

During certain periods such as during refueling and maintenance outages, the reactor is vented to the condenser or atmosphere. Under these circumstances the reactor cools and the oxygen concentration increases to a maximum value of 8 ppm. Equilibrium between the atmosphere above the reactor water surface, the CRD cooling water input, any residual radiolytic effects, and the bulk reactor water will be established after some time. No other changes in water chemistry of significance take place during this plant condition because no appreciable inputs take place.

b. Plant Transient Conditions - Plant Startup/Shutdown

During these conditions, no significant changes in water chemistry other than oxygen concentration take place.

1) Plant Startup

Depending on the duration of the plant shutdown prior to startup and whether the reactor has been vented, the oxygen concentration could be that of air saturated water, i.e., approximately 8 ppm oxygen.

Following nuclear heatup initiation, the oxygen level in the reactor water will decrease rapidly as a function of water temperature increase and corresponding oxygen solubility in water. The oxygen level will reach a minimum of about 20 ppb (0.02 ppm) at a coolant temperature of about 380°F, at which point an increase will take place due to significant radiolytic oxygen generation. For

the elapsed process up to this point the oxygen is degassed from the water and is displaced to the steam dome above the water surface.

Further increase in power increases the oxygen generation as well as the temperature. The solubility of oxygen in the reactor water at the prevailing temperature controls the oxygen level in the coolant until rated temperature (540°F) is reached. Thus, a gradual increase from the minimum level of 20 ppb to a maximum value of about 200 ppb oxygen takes place. At, and after this point (540°F) steaming and the radiolytic process control the coolant oxygen concentration to a level of around 200 ppb.

2) Plant Shutdown

Upon plant shutdown following power operation, the radiolytic oxygen generation essentially ceases as the fission process is terminated. Because oxygen is no longer generated, while some steaming still will take place due to residual energy, the oxygen concentration in the coolant will decrease to a minimum value determined by steaming rate temperature. If venting is performed, a gradual increase to essentially oxygen saturation at the coolant temperature will take place, reaching a maximum value of <8 ppm oxygen.

3) Oxygen in Piping and Parts Other Than the Reactor Vessel Proper

As can be concluded from the preceding descriptions, the maximum possible oxygen concentration in the reactor coolant and any other directly related or associated parts is that of air saturation at ambient temperature. At no time or location, in the water phase, will oxygen levels exceed the nominal value of 8 ppm. As temperature is increased and hence, oxygen solubility decreased accordingly, the oxygen concentration will be maintained at this maximum value, or reduced below it depending on available removal mechanisms, i.e., diffusion, steam stripping, flow transfer or degassing.

Depending on the location, configuration, etc., such as dead legs or stagnant water, inventories may contain 8 ppm dissolved oxygen or some other value below this maximum limitation.

Conductivity of the reactor coolant is continuously monitored. Conductivity instruments are connected to redundant sources: the reactor water recirculation loop and the reactor water cleanup system inlet. The effluent from the reactor water cleanup system is also monitored for conductivity on a continuous basis. These measurements provide reasonable assurance for adequate surveillance of the reactor coolant.

Grab samples are provided, for the locations shown on Table 5.2-8, for special and noncontinuous measurements such as pH, oxygen, chloride and radiochemical measurements.

The relationship of chloride concentration to specific conductance measured at 25°C for chloride compounds such as sodium chloride and hydrochloric acid can be calculated, as shown on Figure 5.2-12. Values for these compounds essentially bracket values of other common chloride salts or mixtures at the same chloride concentration. Surveillance requirements are based on these relationships.

In addition to this program, limits, monitoring and sampling requirements are imposed on the condensate, condensate treatment system and feedwater by warranty requirements and specifications. Thus, a total plant water quality surveillance program is established providing assurance that off specification conditions will quickly be detected and corrected.

The sampling frequency when reactor water has a low specific conductance is adequate for calibration and routine audit purposes. When specific conductance increases, and higher chloride concentrations are possible, or when continuous conductivity monitoring is unavailable, increased sampling is provided. (See the Operational Requirements Manual (ORM)).

For the higher than normal limits of <1 μmho/cm, more frequent sampling and analyses are invoked by the coolant chemistry surveillance program.

The primary coolant conductivity monitoring instrumentation, ranges, accuracy sensor and indicator locations are shown in Table 5.2-8. The sampling is coordinated in a reactor sample station especially designed with constant temperature control and sample conditioning and flow control equipment.

c. Water Purity During a Condenser Leakage

The condensate cleanup system is designed to maintain the reactor water chloride concentration below 200 ppb during a condenser tube leak of 50 gallons per minute for 1 hour.

To protect against a major condenser tube leak, ion exchange capacity of 50 percent of theoretical is maintained during normal operation.

A. Regulatory Guide 1.56

General Compliance or Alternative Approach Assessment:

For commitment, revision number, and scope see section 1.8.

This guide describes an acceptable method of implementing GDC 13, 14, 15, and 31 of 10CFR50 Appendix A with regard to minimizing the probability of corrosion-induced failure of the RCPB in BWR's by maintaining acceptable purity levels in the reactor coolant, and acceptable instrumentation to determine the condition of the reactor coolant.

As previously mentioned, the materials in the primary system are primarily austenitic stainless steel and Zircaloy cladding. The reactor water chemistry limits have been established to provide an environment favorable to these materials. Design Engineering and Operational Requirements Manual limits are placed on conductivity and chloride concentrations. Operationally, the conductivity is limited because it can be continuously and reliably measured and gives an indication of abnormal conditions and the presence of unusual materials in the coolant. Chloride limits are specified to prevent stress corrosion cracking of stainless steel.

The water quality requirements are further supported by General Electric topical report NEDO-10899, Reference 2.

5.2.3.2.3 Compatibility of Construction Materials with Reactor Coolant

The materials of construction exposed to the reactor coolant consist of the following:

(1) Solution annealed austenitic stainless steels (both wrought and cast) Types 304, 304L, 316 and 316L.

(2) Nickel base alloys - Inconel 600 and Inconel 750X.

(3) Carbon steel and low alloy steel.

(4) Some 400 series martensitic stainless steel (all tempered at a minimum of 1100°F).

(5) Colmonoy Stellite or any other material that has been shown by an engineering evaluation to have similar resistance to stress corrosion and general corrosion can be used as hard facing material.

All of these materials of construction are resistant to stress corrosion in the BWR coolant. General corrosion on all materials, except carbon and low alloy steel, is negligible. Conservative corrosion allowances are provided for all exposed surfaces of carbon and low alloy steels.

Contaminants in the reactor coolant are controlled to very low limits by the reactor water quality specifications. No detrimental effects will occur on any of the materials from allowable contaminant levels in the high purity reactor coolant. Expected radiolytic products in the BWR coolant have no adverse effects on the construction materials.

5.2.3.2.4 Compatibility of Construction Materials with External Insulation and Reactor Coolant

Metallic insulation normally is applied to the reactor coolant pressure boundary and austenitic stainless steel piping inside the containment. Some mass type insulation, amounting to less than 1% of the square footage of insulation, is employed on these surfaces. Where mass type

insulation is used, it is completely encased in steel sheeting or inside a booted penetration seal. Therefore there is no problem of compatibility with construction materials.

5.2.3.3 Fabrication and Processing of Ferritic Materials

5.2.3.3.1 Fracture Toughness

5.2.3.3.1.1 Compliance with Code Requirements

(1) The ferritic materials used for piping, pumps, and valves of the reactor coolant pressure boundary are 2-1/2 inches or less in thickness. Impact testing was performed in accordance with NB-2332 for thicknesses of 2-1/2 inches or less.

(2) Materials for bolting with nominal diameters exceeding one inch was required to meet both the 25 mils lateral expansion specified in NB-2333 and the 45 ft.-lb Charpy V value specified in Appendix G of 10 CFR 50.

(3) The reactor vessel complies with the requirements of NB-2331. The reference temperature, RT_{NDT}, has been established for all required pressure retaining materials used in the construction of Class I vessels. This includes plates, forgings, weld material, and heat affected zone. The RT_{NDT} differs from the nil-ductility temperature, NDT, in that in addition to passing the drop test, three Charpy-V-Notch specimens (traverse) must exhibit 50 ft-lbs absorbed energy and 35 mil lateral expansion at 60°F above the RT_{NDT}. The core beltline material must meet 75 ft-lbs absorbed upper shelf energy.

5.2.3.3.2 Control of Welding

5.2.3.3.2.1 Control of Preheat Temperature Employed for Welding of Low Allow Steel. Regulatory Guide 1.50

A. Regulatory Guide 1.50
General Compliance or Alternate Approach Assessment:
For commitment, revision number, and scope see section 1.8.

This guide delineates preheat temperature control requirements and welding procedure qualifications supplementing those in ASME Sections III and IX.

The use of low alloy steel was initially restricted to the reactor pressure vessel. Other ferritic components in the reactor coolant pressure boundary were initially fabricated from carbon steel materials. During plant construction the use of low-alloy steel was restricted to the reactor pressure vessel. For fabrication of the reactor pressure vessel welding preheat control complied with Regulatory Guide 1.50. Low-alloy steels were not used on the remainder of the reactor coolant pressure boundary (RCPB) during plant construction, therefore, control of preheat temperature for welding as required by Regulatory Guide 1.50 was not applicable to those portions of the RCPB at that time. Monitoring of plant operation has revealed certain sections of piping to be susceptible to Flow Accelerated Corrosion (FAC). Low-alloy steels, such as 2¼ Cr – 1 Mo, may be used as repair/replacement materials in these piping sections. Where low-alloy steel is used the requirements of Regulatory Guide 1.50 for control of welding preheat temperature will be complied with.

Preheat temperatures employed for welding of low alloy steel meet or exceed the recommendations of ASME section III, subsection NA. Components were either held for an extended time at preheat temperature to assure removal of hydrogen, or preheat was maintained until post weld heat treatment. The minimum preheat and maximum interpass temperatures were specified and monitored.

All welds were nondestructively examined by radiographic methods. In addition, a supplemental ultrasonic examination was performed.

5.2.3.3.2.2 Control of Electroslag Weld Properties. Regulatory Guide 1.34

No electroslag welding was performed on BWR components.

5.2.3.3.2.3 Welder Qualification for Areas of Limited Accessibility. Regulatory Guide 1.71.

Qualification for areas of limited accessibility is discussed in section 5.2.3.4.2.3.

5.2.3.3.3 Nondestructive Examination of Ferritic Tubular Products. Regulatory Guide 1.66.

A. Regulatory Guide 1.66
General Compliance or Alternate Approach Assessment:
For commitment, revision number, and scope see section 1.8.

This guide describes a method of implementing requirements acceptable to NRC regarding non-destructive examination requirements of tubular products used in RCPB.

Wrought tubular products were supplied in accordance with applicable ASTM/ASME material specifications. Additionally, the specification for the tubular product used for CRD housings specified ultrasonic examination to paragraph NB-2550 of ASME Code Section III.

These RCPB components met the requirements of ASME Codes existing at time of placement of order which predated Regulatory Guide 1.66. At the time of the placement of the orders, 10 CFR 50 Appendix B requirements and the ASME code requirements assured adequate control of quality for the products.

This Regulatory Guide was withdrawn on September 28, 1977 by the NRC because the additional requirements imposed by the guide were satisfied by the ASME Code.

5.2.3.3.4 Moisture Control for Low Hydrogen, Covered Arc-Welding Electrodes

All low hydrogen covered welding electrodes are stored in controlled storage areas. Electrodes are received in hermetically sealed cannisters. After removal from the sealed containers, electrodes which are not immediately used are placed in storage ovens.

Electrodes are distributed from sealed containers or ovens as required. Electrodes which are damaged, wet, or contaminated are discarded. If any electrodes are inadvertently left out of the ovens for more than one shift, they are discarded.

5.2.3.4 Fabrication and Processing of Austenitic Stainless Steels

5.2.3.4.1 Avoidance of Stress Corrosion Cracking

5.2.3.4.1.1 Avoidance of Significant Sensitization

A. Regulatory Guide 1.44:

Clinton Power Station complies with Regulatory Guide 1.44.

B. NUREG 0313:

Clinton Power Station complies with NUREG 0313, Rev. 1.

C. Method of compliance:

With the exception of the reactor recirc pipe, all wrought austenitic stainless steel in contact with the reactor coolant is 316 L stainless steel and, therefore, has less than 0.03% carbon content.

The reactor recirculation piping is fabricated primarily of 304 stainless steel. Certain portions have been changed to "nuclear grade" type 316 which contains less than 0.03% carbon. The remainder has had "corrosion-resistant clad" applied in the vicinity of field welds so that no heat-affected type 304 will be in contact with the coolant. The piping assemblies were all solution annealed after all shop welding and application of the cladding.

The following additional process controls were applied in addition to material selection.

All austenitic stainless steel was purchased in the solution heat treated condition in accordance with applicable ASME and ASTM specifications. Carbon content was limited to 0.08% maximum, and cooling rates from solution heat treating temperatures were required to be rapid enough to prevent sensitization.

Welding heat input was restricted to 110,000 joules per inch maximum, and interpass temperature to 350 °F. High heat welding processes such as block welding and electroslag welding were not permitted. All weld filler metal and castings were required by specification to have a minimum of 5% ferrite.

Whenever any wrought austenitic stainless steel was heated to temperatures over 800° F, by means other than welding or thermal cutting, the material was solution heat treated.

These controls were used to avoid severe sensitization and to comply with the intent of Regulatory Guide 1.44, "Control of the Use of Sensitized Stainless Steel".

Since CPS complies with NUREG 0313, no additional inservice inspection or leak detection is required.

5.2.3.4.1.2 Process Controls to Minimize Exposure to Contaminants

Exposure to contaminants capable of causing stress corrosion cracking of austenitic stainless steel components was avoided by carefully controlling all cleaning and processing materials which contact the stainless steel during manufacture and construction.

To further reduce the probability of cracking in small lines, three inch and smaller lines were fabricated from Type 316L, even though they are not classified as "service sensitive." This extra precaution has been taken because piping cracks have been confined to smaller piping.

When stress corrosion is not predicted due to low stress, General Electric has chosen to control processing of stainless steel to minimize susceptibility. These controls include, but are not limited to, reduced weld heat input, control of cold work, and control of solution heat treatment.

As summarized above, General Electric has complied with the intent of Regulatory Guide 1.44 by controlling processing of stainless steel to avoid severe sensitization which could lead to stress corrosion cracking. In addition, areas where a concern for stress corrosion cracking exists due to cracks in earlier designs have been redesigned to eliminate the possibility of stress corrosion cracking.

Special care was exercised to insure removal of surface contaminants prior to any heating operations. Water quality for cleaning, rinsing, flushing, and testing was controlled and monitored. Suitable packaging and protection was provided for components to maintain cleanliness during shipping and storage.

The degree of surface cleanliness obtained by these procedures meets the requirements of Regulatory Guide 1.44.

5.2.3.4.1.3 Cold Worked Austenitic Stainless Steels

Austenitic stainless steels with a yield strength greater than 90,000 psi are not used.

5.2.3.4.2 Control of Welding

5.2.3.4.2.1 Avoidance of Hot Cracking

A. Regulatory Guide 1.31
General Compliance or Alternate Approach Assessment:
For commitment, revision number, and scope see section 1.8.

Regulatory Guide 1.31 describes an acceptable method of implementing requirements with regard to the control of welding when fabricating and joining austenitic stainless steel components and systems.

All austenitic stainless steel weld filler materials were supplied with a minimum of 5% delta ferrite. This amount of ferrite is considered adequate to prevent microfissuring in austenitic stainless steel welds.

An extensive test program performed by General Electric Company, with the concurrence of the Regulatory Staff, has demonstrated that controlling weld filler metal ferrite at 5% minimum produces production welds which meet the requirements of Regulatory Guide 1.31.

A total of approximately 400 production welds in five BWR plants were measured and all welds met the requirements of the Interim Regulatory Position.

5.2.3.4.2.2 Electroslag Welds. Regulatory Guide 1.34.

Electroslag welding was not employed for reactor coolant pressure boundary components.

5.2.3.4.2.3 Welder Qualification for Areas of Limited Accessibility. Regulatory Guide 1.71.

A. Regulatory Guide 1.71
General Compliance or Alternate Approach Assessment:
For commitment, revision number, and scope see section 1.8.

Regulatory Guide 1.71 requires that weld fabrication and repair for wrought low-alloy and high-alloy steels or other materials such as static and centrifugal castings and bimetallic joints should comply with fabrication requirements of Section III and Section IX of the ASME Boiler and Pressure Vessel Code. It also requires additional performance qualifications for welding in areas of limited access.

All ASME Section III welds were fabricated in accordance with the requirements of Sections III and IX of the ASME Boiler and Pressure Vessel Code. There are few restrictive welds involved in the fabrication of BWR components. Welder qualification for welds with the most restrictive access was accomplished by mock-up welding. Mock-ups were examined with radiography or sectioning.

5.2.3.4.3 Nondestructive Examination of Tubular Products. Regulatory Guide 1.66.

For discussion of compliance with Regulatory Guide 1.66 see 5.2.3.3.3.

5.2.4 Inservice Inspection and Testing of Reactor Coolant Pressure Boundary

5.2.4.1 Inservice Inspection Program

The reactor pressure vessel, system piping, pumps, valves and components (including supports and pressure-retaining bolting) within the reactor coolant pressure boundary (RCPB), defined as Quality Group A (ASME Code Section III, Class 1) were designed and fabricated to permit full compliance with the edition and addenda of Section XI in effect at the time of their construction. Engineering and design considerations were taken to ensure the reactor coolant pressure boundaries are inspectable, with access provided for volumetric examination of pressure-retaining welds from the external surfaces. Periodic design reviews are performed to ascertain if the accessibility requirements of later code editions and addenda recognized in 10 CFR 50 can be met. Examination plans will be developed prior to each inspection interval.

5.2.4.1.1 Examination Plans

The preservice and inservice inspection plans are the means used to implement and requirements of Section XI of the ASME Code. A description of each plan follows.

5.2.4.1.1.1 Preservice Examination Plan

This subsection is historical.

The preservice examination plan consists of a list of piping, pumps, valves and components (including their supports and pressure-retaining bolting) subject to examination during preoperational testing. Coverage for the preservice examination uses the indicated edition/addenda, ASME Code, Section CI, of Table 5.2-3.

The nondestructive examination will be performed in accordance with the examination categories and methods specified in Article IWB-2000. Pump operability and valve functional testing will be conducted in accordance with Articles IWP and IWV, respectively, of the Code.

The Inspection Agency will supply supporting data which consists of weld identification isometric drawings, mechanized examination scan plans, nondestructive examination procedures and ultrasonic calibration standard drawings which will be used during the preservice examination.

The preservice examination of piping welds at Clinton will be conducted in accordance with the requirements of Appendix III to Section XI for ferritic piping welds and Article 5 of Section V for austenitic piping welds. This is consistent with IWA-2232 of the ASME Code, Section XI. The piping calibration blocks have been manufactured to permit either method of examination to be performed.

Appendix III to Section XI may be used for examination of austenitic piping welds during subsequent inservice inspections. The feasibility of using this method is under evaluation, and its applicability will be determined prior to the submittal of the inservice inspection program for the first 10-year interval.

The use of Article 5 of Section V for austenitic piping welds conforms to IWA-2232 of Section XI.

During the examination of either ferritic or austenitic piping welds using Appendix III to Section XI, any crack-like indications, regardless of amplitude, determined by an examiner to be other than geometrical or metallurgical in nature shall be recorded and investigated by a Level II or Level III examiner to the extent necessary to determine the shape, identification, and the location of the reflector.

The applicable nondestructive examination procedure submitted with the Preservice Inspection Program on February 23, 1982 is under revision to incorporate this change. The revision will be submitted to the Authorized Nuclear Inspection Agency for review and approval and incorporated into the Preservice Inspection Program Plan by revision.

Any reflector found to be other than geometrical or metallurgical in nature will be evaluated to determine the corrective action necessary to disposition the indication. The evaluation will be conducted in accordance with Article IWA-3000 of the 1977 Edition, through Summer 1978 Addenda to Section XI of the ASME Code. (Q&R 250.1)

On February 23, 1982 a copy of the Preservice Inspection Program for the Clinton Power Station Unit 1 was submitted for review. The submittal contained the list of welds and component support to be examined by class, ASME Section XI item number, ASME Section XI category, weld identification number, examination method, nondestructive examination procedure to be used, applicable calibration block identification, and figure number for the weld

isometric which identifies the location of the weld in its respective system. Supplemental information will be provided for those items in the submittal which were not complete due to insufficient information at the time of submittal.

If during the course of examination it is found that an examination does not receive a complete Section XI preservice examination, a relief request will be submitted. The relief request will identify the primary reason for the partial examination, e.g., restricted access or exam performed from one side due to fitting-to-fitting configuration. The relief request will also contain the extent of examination possible, weld identification number and location, and the physical configuration of the weld.

Upon completion of the preservice examination, a summary report will be available for inspection identifying all examinations performed, results of the examination, and the evaluation and resolution of any indication found exceeding the requirements of the ASME Code. (Q&R 250.2)

5.2.4.1.1.2 Inservice Examination Plan

The inservice inspection plan consists of a list of piping, pumps, valves and components (including their supports and pressure-retaining bolting) subject to examination during a specific inspection interval. The inspection program is divided into four intervals, each having a duration of 10 years. Each interval will have its own inspection plan consisting of the schedule of component examination and the inspection techniques to be used. The plans will be updated to later editions and addenda as required by 10 CFR 50.

5.2.4.2 System Boundaries Subject to Inspection

ASME Code Class I components (including supports and pressure-retaining bolting) are examined in accordance with the inspection requirements of Section XI of the Code, except for those components exempted under IWB-1220 or when specific relief is granted by the NRC in accordance with the provisions of 10 CFR 50.55a (g) (6) (i). Section XI, Article IWB-2000 defines the examination category and methods to be used. The boundaries subject to inspection include the pressure vessel, piping, pumps and valves which are part of or connected to the reactor coolant system, up to and including: (1) The outermost containment isolation valve in system piping that penetrates the primary reactor containment; (2) the second of two valves normally closed during normal reactor operation in system piping that does not penetrate the primary reactor containment; and (3) the reactor coolant system safety and relief valves. The boundaries subject to inspection include the pressure vessel, piping, pumps, valves, pressure-retaining bolting and supports extending out to and including the first isolation valve outside the containment. A list of the systems and components to be examined within the RCPB is included in Table 3.2-1.

5.2.4.3 Provision for Access to Reactor Coolant Pressure Boundary

Access and design considerations were taken to ensure the reactor coolant pressure boundaries were inspectable in accordance with the requirements of the 1974 Edition of ASME Section XI Summer 1975 Addenda.

5.2.4.3.1 Reactor Pressure Vessel

Access for examination of the reactor pressure vessel has been incorporated into the design of the vessel to meet the requirements of IWA-1500 "Accessibility" of Section XI. The vessel and nozzles were examined in place during the preservice examination using the same type equipment expected to be used for subsequent inservice examinations. A description of the access provisions follows:

(1) Nozzles

Access to inspect the nozzles is provided by openings in the reactor shield wall (RSW) designed to afford a nominal 9-inch annulus between the nozzle piping and the RSW. The space will provide: (1) the necessary clearance for mechanized nozzle and piping inspection equipment to operate, and (2) the necessary space to repair and reinspect nozzles or piping in the event structural defects or indications are revealed.

Access is provided to a nominal 30-inch annulus between the RSW insulation and the reactor pressure vessel through access doors in the RSW. This space permits examination of the nozzle-to-vessel welds located wihtin the RSW. Removable thermal insulation and personnel platforms are provided at each nozzle to further facilitate examination.

(2) Reactor Vessel Welds

Access to welds above the RSW, including the vessel-to-flange weld, is accomplished by removable thermal insulation and a circumferential platform located around the top of the RSW.

Access to the top head is accomplished by removable thermal insulation. Laydown areas have been provided for the vessel head and bolting to permit their examination.

Access to the core support structures and vessel interior cladded surfaces is provided by removing the steam dryer and separator assembly. Laydown areas have been provided for the dryer and separator in the upper containment pools.

Access doors are provided in the RSW to permit access to the annulus between it and the reactor vessel. Welds within the annulus are made accessible by standoff thermal insulation and two personnel platforms extending around the annulus between the reactor vessel and the RSW.

Access holes are provided in the vessel support skirt to allow examination of the bottom head welds.

The examinations performed include the circumferential, longitudinal, bottom head, and bottom head penetration welds, as well as accessible welds in the housings of the peripheral CRD.

5.2.4.3.2 Pipe, Pumps and Valves

(1) Physical Arrangement

Physical arrangements of pipe, pumps, and valves provide: personnel access to each piping weld, pump and valve, and work space to permit repair and reexamination of welds and components if defects or indications are revealed. Personnel platforms and storage areas are provided to facilitate examinations. Removable thermal insulation is provided on those welds and components which require frequent access for examination. Design considerations incorporate provisions for the use of lifting equipment for the removal of insulation and pump and valve parts whose removal is necessary to permit access for examination or repair.

(2) Welds

Welds are located to permit ultrasonic examination from at least one side but where component configuration permits, access from both sides is provided. Consideration was given during design and fabrication to weld joint configuration and surface finish to permit thorough ultrasonic examination.

5.2.4.4 Examination Techniques and Procedures

Examination techniques and procedures, including any special techniques and procedures, were written and performed in accordance with the requirements of IWA-2210 - Visual Examination, IWA-2220 - Surface Examination, and IWA-2230 - Volumetric Examination of ASME Section XI of the Code. For piping, the examination shall be in accordance with Appendix III, Section XI, instead of Article 5, Section V, and all reflectors that produce response greater than 50% of the reference level shall be recorded. The extent of surface and volume examination for piping shall be as depicted in Figure IWB-2500-8 of ASME Code Section XI.

The reactor pressure vessel welds were examined in accordance with NRC Regulatory Guide 1.150. Refer to USAR Section 1.8.

Where alternative examinations are used, they will comply with the requirements of Section XI, IWA-2240.

5.2.4.5 Equipment for Inservice Inspection

Manual ultrasonic examination was planned for the preservice examination and subsequent inservice inspection examinations of the reactor pressure vessel top and bottom heads, the flange-to-vessel weld, pressure-retaining bolting, and component bodies and casings.

(1) Reactor Pressure Vessel

Remote mechanized ultrasonic scanning equipment was employed to examine the reactor vessel longitudinal and circumferential welds located within the RSW. The equipment operated between the vessel thermal insulation and the vessel wall. The ultrasonic devices were supported by means of ring and pole-type tracks. The ring tracks were employed for examination of the vessel

circumferential welds and the pole tracks for examining the vessel longitudinal welds.

(2) Reactor Vessel Nozzle Welds

Remote mechanized ultrasonic scanning equipment was employed for examination of the nozzle-to-vessel welds. The ultrasonic equipment was supported and guided from the pipe extending from the nozzle. The equipment provided radial and circumferential motion to the ultrasonic transducer while rotatinq about the nozzle. Attachment of the equipment can be accomplished manually through the access openings in the RSW.

(3) Reactor Vessel Internals

The reactor vessel internals were inspected primarily by remote visual method; however, surface replication may be used. Underwater viewing equipment and binoculars were used for the examination.

5.2.4.6 Inspection Intervals

The inspection intervals will be in accordance with IWA-2400 and IWB-2400 of ASME Code Section XI, with each interval having a nominal 10-year duration. The inspections are concurrent with plant refueling and/or maintenance shutdowns.

5.2.4.7 Examination Categories and Requirements

The examination categories and requirements will be in compliance with Article IWB-2000 of ASME Code Section XI.

5.2.4.8 Evaluation of Examination Results

Evaluation of the preservice and subsequent inservice examination results was conducted in accordance with the requirements of Section XI, IWA-3000 and IWB-3000.

The data obtained from the preservice inspection established the initial base line for subsequent inservice inspections. The base line data for the reactor pressure vessel was obtained with the vessel installed at the site.

5.2.4.9 Coordination of Inspection Equipment with Access Provisions

This subsection is historical.

Development of remotely controlled inspection equipment to be used on CPS is followed closely to assure that inservice inspection access provisions are adequate to permit its use. Assistance in design, review and recommendations concerning conformity are obtained from an experienced consulting firm. Periodic meetings are held with the consultants to assure that the design of the remotely controlled equipment is compatible with station design.

5.2.4.10 System Leakage and Hydrostatic Tests

Pressure-retaining Code Class 1 component and system leakage and hydrostatic testing are conducted in accordance with the requirements of Section XI, IWB-5000. The temperature-

pressure relationship of the system at test will be maintained within the values specified in Section XI, IWB-5222 and technical specification requirements for operating limitations during heatup, cooldown and system hydrostatic pressure testing.

5.2.4.11 Ultrasonic Calibration Standards

Ultrasonic calibration standards or material for their fabrication have been procured for all examination categories of Table IWB-2600, 1974 Edition, Summer 1975 Addenda of the ASME Code, Section XI, requiring volumetric examination. These standards will be maintained by CPS plant staff as required by IWA-1400 of ASME Code Section XI.

5.2.4.12 Augmented Inservice Inspection

5.2.4.12.1 Feedwater Nozzles and CRD Return Line Nozzle Examinations

The feedwater nozzles (triple thermal sleeve design) and CRD return line (CRDRL) nozzle (capped without rerouting CRDRL) will be examined using the methods, techniques and frequency outlined in NUREG 0619. For Feedwater Nozzles only, the BWR Owner's Group Topical Report GE-NE-523-A71-0594-A, Alternate BWR Feedwater Nozzle Inspection Requirements, will be utilized in lieu of NUREG 0619.

5.2.4.12.2 Examination of Piping Susceptible to Intergranular Stress Corrosion Cracking

Piping susceptible to intergranular stress corrosion cracking (IGSCC) will be examined using procedures that have demonstrated the ability to detect IGSCC. Personnel performing such examinations shall be certified for using these procedures.

5.2.4.12.3 Examination of Containment Penetration Head Fittings

Containment penetration head fittings associated with high energy piping systems will be examined by a surface examination technique during ISI.

5.2.4.12.4 Examination of Break Exclusion Region

During the first ten-year inservice inspection (ISI) interval, high energy Class 1 piping located between the containment isolation valves (in the break exclusion area) was examined as follows:

One hundred percent of all circumferential and longitudinal welds of piping larger than 1 inch nominal pipe size.

Starting in the second ten-year ISI interval, in lieu of the above requirements, EPRI Topical Reports Risk-Informed ISI (TR-112657 Revision B-A), Break Exclusion Region (TR-1006937 Revision 0-A), and ASME Code Case N-578-x are used to establish the risk evaluation, selection criteria, and examination methods. The NRC approved the use of this alternate method in an SER dated June 27, 2002. The weld population subject to examination under the Risk-Informed BER Program are non-exempted piping welds as determined in accordance with the rules of ASME Section XI IWB-1220, Edition and Addenda as applicable to the existing ISI program.

5.2.4.13 Repairs

If structural defects or indications found during examination require repair, subsequent repairs will be based on the requirements of IWA-4000 and IWB-4000 of Section XI, ASME Code.

5.2.5 Reactor Coolant Pressure Boundary and ECCS System Leakage Detection System

5.2.5.1 Leakage Detection Methods

The Nuclear Boiler Leak Detection System consists of temperature, pressure, flow, airborne gaseous and particulate fission product sensors, and process radiation sensors with associated instrumentation used to indicate and alarm leakage from the reactor coolant pressure boundary and, in certain cases, to initiate signals used for automatic closure of isolation valves to shut off leakage external to the drywell. The system is designed to be in conformance with NRC Regulatory Guide 1.45 and reference section IEEE 279 except as described in USAR section 1.8. The Leak Detection System P&ID is shown on Drawing M05-1041.

Abnormal leakage from the following systems within the primary containment and within selected areas of the plant outside the primary containment is detected, indicated, alarmed and in certain cases isolated:

(1) Main steam lines

(2) Reactor Water Cleanup System (RWCS)

(3) Residual Heat Removal System (RHR)

(4) Reactor Core Isolation Cooling System (RCIC)

(5) Feedwater System

(6) High Pressure Core Spray (HPCS)

(7) Coolant Systems within the primary containment

(8) Low Pressure Core Spray (LPCS)

(9) Reactor pressure vessel

(10) Miscellaneous systems

Leak detection methods differ for plant areas inside the primary containment as compared to these areas located outside the primary containment. These areas are considered separately as follows:

5.2.5.1.1 Detection of Leakage within the Drywell

The primary detection methods for small unidentified leaks within the drywell include monitoring of drywell floor drain sump flow rate, and drywell cooler condensate flow rate increases. These variables are continuously indicated and/or recorded in the control room. If the unidentified leakage increases to 3.6 gpm, as sensed by the drywell floor drain sump flow rate instrumentation the channel(s) will trip and activate an alarm in the control room. If the unidentified leakage exceeds an increase of 2 gpm in any 24 hour period, as sensed by the drywell floor drain sump flow rate instrumentation, the channel(s) will trip and activate an alarm in the control room. If the unidentified leakage increases to 2 gpm for each of the drywell cooler condensate flow rate instruments, the channel(s) will trip and activate an alarm in the control room. No isolation trip will occur.

The secondary detection methods, i.e., the monitoring of pressure and temperature of the drywell atmosphere and airborne gaseous and particulate radioactivity increases are used to detect gross unidentified leakage. High drywell pressure will alarm and trip the isolation logic which will result in closure of the selected containment isolation valves.

The detection of small identified leakage within the drywell is accomplished by monitoring drywell equipment drain sump fillup time and pumpout time. The fillup and/or pumpout timers will activate an alarm in the control room. In addition, a flow element is installed in the sump pump discharge line which, in combination with a differential pressure transmitter, is used to provide a signal to a control room totalizer, which identifies gallons pumped, and a PLC, which provides signals for identification of drywell equipment leakage.

The determination of the source of identified leakage within the drywell is accomplished by monitoring the drain lines to the drywell equipment drain sumps from various potential leakage sources. These include upper containment pool seal drain flow, reactor recirculation pump seal drain flow, valve stem leakoff drain line temperatures and reactor vessel head seal drain line pressure. Additionally, temperature is monitored in the safety/relief valve discharge lines to the suppression pool to detect leakage through each of the safety/relief valves. All of these monitors, except the reactor recirculation seal drain flow monitor and the reactor vessel head seal drain line pressure monitor, continuously indicate and/or record in the control room. All of these monitors will trip and activate an alarm in the control room on detection of leakage from monitored components.

Excessive leakage inside the drywell (e.g., process line break or loss of coolant accident within the drywell) is detected by high drywell pressure, low reactor water level or steam line flow (for breaks down stream of the flow elements). The instrumentation channels for these variables will trip when the monitored variable exceeds a predetermined limit to activate an alarm and trip the isolation logic which will close appropriate isolation valves (see table 5.2-9b).

The alarms, indication and isolation trip functions initiated by the leak detection systems are summarized in Tables 5.2-9a and 5.2-9b.

5.2.5.1.2 Detection of Leakage External to the Drywell

The detection of leakage external to the drywell is accomplished by detection of increases in containment building floor drain sump and containment building equipment drain sump fillup time and pumpout time. The containment building floor drain sump monitors will detect unidentified leakage increases relative to normal background and activate an alarm in the control room when total leakage reaches 5 gpm. The containment building equipment drain sump instrumentation will detect identified leakage increase relative to normal background leakage and will activate an alarm in the control room when total leakage reaches 25 gpm.

Identified leakage to the containment building floor drain sump from the upper containment pool liner is monitored for flow. High flow in a drain line will activate an alarm in the control room.

5.2.5.1.3 Detection of Leakage External to Containment Building

The areas outside the containment building which are monitored for primary coolant leakage are: equipment areas in the auxiliary building, the main steam tunnel and the turbine building. The process piping for each system to be monitored for leakage is located in compartments or rooms separate from other systems where feasible so that leakage may be detected by area temperature indications. Each leakage detection system will detect leak rates that are less than the established leakage limits.

(1) Ambient temperatures of the equipment areas are monitored by dual element thermocouples.

The ambient temperature sensing elements are located or shielded so that they are sensitive to air temperatures only and not radiated heat from hot piping or equipment. Individual area differential temperatures are monitored from temperature elements which sense the differential between the cooling water inlet and outlet of the respective area coolers. Increases in ambient and/or differential temperature will indicate leakage of reactor coolant into the area.

These monitors have sensitivities suitable for detection of reactor coolant leakage into the monitored areas of 25 gpm or less. The temperature trip setpoints are a function of room size and the type of ventilation provided. Ambient temperature monitors provide alarm and indication and recording in the control room and will trip the isolation logic to close selected isolation valves as listed in Table 5.2-9b.

(2) Excess leakage external to the containment (e.g., process line break outside containment) is detected by low reactor water level, high process line flow, high ambient temperature in the piping or equipment areas, and high differential flow. These monitors provide alarm and indication in the control room and will trip the isolation logic to cause closure of appropriate system isolation valves on indication of excess leakage (e.g., the main steam tunnel monitors will close the main steam line and MSL drain isolation valves and others; see Table 5.2-9b). Differential temperature monitors in these areas provide indication only.

(3) The detection of small amounts of leakage within the LPCS, HPCS, RCIC and RHR pump cubicles is accomplished by detection of increases in cubicle floor drain sump fillup time and pumpout time. These monitors will detect unidentified leakage increases relative to normal background and will activate an alarm in the main control room when leakage exceeds 5 gpm.

5.2.5.1.4 Intersystem Leakage Monitoring

Radiation monitors are used to detect reactor coolant leakage into cooling water systems supplying the RHR heat exchangers and the RWCU heat exchangers. These monitoring channels are part of the Process Radiation Monitoring System. Monitors are also provided downstream of each fuel pool heat exchanger and on the service water effluent. A process radiation monitoring channel monitors for leakage into each cooling water header downstream of the RHR heat exchangers and on the common header downstream of the RWCU non-regenerative heat exchangers. Each channel will alarm on high radiation conditions indicating process leakage into the cooling water. No isolation trip functions are performed by these monitors.

5.2.5.2 Leak Detection Instrumentation and Monitoring

5.2.5.2.1 Leak Detection Instrumentation and Monitoring Inside Drywell

(1) Floor Drain Sump Measurement

The normal design leakage collected and piped to the floor drain sump includes unidentified leakage from the control rod drives, valve flange leakage, component cooling water, service water, air cooler drains, and any leakage not connected to the equipment drain sump. There are two systems for monitoring unidentified leakage. One floor drain monitoring system measures pump discharge flow to determine average leakage rate. A second floor drain monitoring system measures sump level rate of change to determine average leakage rate at one minute intervals. Abnormal leakage rates are alarmed in the main control room. Collection in excess of background leakage would indicate an increase in reactor coolant leakage from an unidentified source.

(2) Equipment Drain Sump

The equipment drain sump collects only identified leakage. This sump receives piped drainage from pump seal leakoff, reactor vessel head flange vent drain, and valve stem packing leak off. Collection in excess of background leakage would indicate an increase in reactor coolant from an identified source.

(3) Cooler Condensate Drain

Condensate from the drywell coolers is routed to the floor drain sump and is monitored by use of a flow transmitter which measures flow in the condensate drain line and sends signals for indication and alarm instrumentation in the control room. An adjustable alarm is set to annunciate on the condensate high flow rate approaching the unidentified discharge rate limit.

(4) Temperature Measurement

The ambient temperature within the drywell is monitored by four single element thermocouples located equally spaced in the drywell. An abnormal increase in drywell temperature could indicate a leak within the drywell. The drywell exit end of the containment penetration guard pipe for the main steam line is also monitored for abnormal temperature rise caused by leakage from the main steam line. Ambient temperatures within the drywell are recorded and alarmed on the leakage detection and isolation system (LD&IS) control room panel.

(5) Fission Product Monitoring

The Primary Containment Air Sampling System is used along with the temperature, pressure, and flow variation described above to detect leaks in the nuclear system process barrier. The system continuously monitors the drywell atmosphere for airborne radioactivity (iodine, noble gases and particulates), for details see section 5.2.5.2.2. The sample is drawn from the drywell. A sudden increase of activity, which may be attributed to steam or reactor water leakage, is annunciated in the control room (see Section 7.6).

(6) Drywell Pressure Measurement

The drywell is at a slightly positive pressure during reactor operation. The drywell is monitored by pressure sensors. The pressure fluctuates slightly as result of barometric pressure changes and outleakage. A pressure rise above the normally indicated values will indicate a possible leak within the drywell. Pressure exceeding the preset values will be annunciated in the main control room and safety action will be initiated.

(7) Reactor Vessel Head Seal

The reactor vessel head closure is provided with double seals with a leak off connection between the seals that is piped through a normally closed manual valve to the equipment drain sump. Leakage through the first seal is annunciated in the control room. This annunciator is verified "not in" at least once per 24 hours. When pressure between the seals increases, an alarm in the

control room is actuated. The second seal then operates to contain the vessel pressure.

(8) Reactor Water Recirculation Pump Seal

Reactor water recirculation pump seal leaks are detected by monitoring flow in the seal drain line. Leakage, indicated by high flow rate, alarms in the control room. The leakage is piped to the equipment drain sump.

(9) Safety/Relief Valves

Temperature sensors connected to a multipoint recorder are provided to detect safety/relief valve leakage during reactor operation. Safety/relief valve temperature elements are mounted, using a thermowell, in the safety/relief valve discharge piping several feet downstream from the valve body. Temperature rise above ambient is annunciated in the main control room. See the nuclear boiler system piping and instrumentation diagram, 796E724.

(10) Valve Stem Packing Leakage

Valve stem packing leakage from some of the power-operated valves in systems connected to the Reactor Coolant Pressure Boundary inside the drywell is detected by monitoring packing leakoff. High temperature is recorded and annunciated by an alarm in the main control room. Refer to the system P&IDs which detail the specific valves equipped with stem packing leakoff lines and associated temperature monitoring instrumentation.

(11) High Flow in Main Steam Lines (for leaks downstream from flow elements)

High flow in each main steam line is monitored by differential pressure sensors that sense the pressure difference across a flow element in the line. Steam flow exceeding preset values for any of the four main steam lines results in annunciation and isolation of all the main steam and steam drain lines.

(12) Reactor Water Low Level

The loss of water in the reactor vessel (in excess of make up) as the result of a major leak from the reactor coolant pressure boundary is detected by using the same nuclear boiler system low reactor water level signal that alarms and isolates selected primary system isolation valves.

(13) RCIC Steam Line Flow (for leaks downstream from flow elements)

The steam supply line for motive power for operation of the RCIC turbine is monitored for abnormal flows. Steam flows exceeding preset values initiate annunciation and isolation of the RCIC steam lines.

(14) High Differential Pressure Between ECCS Injection Lines (for leakage internal to reactor vessel only)

A break internal to the vessel between ECCS injection nozzles and vessel shroud is detected by monitoring the differential pressure between RHR "A" and LPCS, RHR "B" and "C", and HPCS and reactor vessel plenum.

These differential pressure instruments are connected to the ECCS (RHR/LPCI, LPCS, HPCS) injection lines downstream of the testable check valves and provide indication and alarm only in the main control room; they do not provide ECCS isolation.

(15) Upper Pool Leakage

The upper pool liner and bellows seal is monitored for leakage by means of flow transmitters locally mounted on the upper pool drain line. Indicator and alarm are located in the main control room.

Tables 5.2-9a and 5.2-9b summarize the actions taken by each leakage detection function. The tables show that those systems which detect gross leakage initiate immediate automatic isolation. The systems which are capable of detecting small leaks initiate an alarm in the control room. The operator may manually isolate the leakage source or take other appropriate action.

5.2.5.2.2 Containment/Drywell Airborne Radioactivity Monitoring

The radioactivity monitors for detecting RCPB leakage are subject to substantial limitations of their usefulness as described below. The particulate and iodine monitors are not effective due to the significant amount of plateout (see Ref. 7). The noble gas monitor is used to alarm for large leaks and pipe breaks.

The reliability, sensitivity and response times of radiation monitors to detect 1GPM in one hour of reactor coolant pressure boundary (RCPB) leakage will depend on many complex factors. The major limiting factors are discussed below.

5.2.5.2.2.1 Source of Leakage

a. Location of Leakage - The amount of activity that would become airborne following a 1GPM leak from the RCPB will vary depending on the leak location and the coolant temperature and pressure. For example, a feedwater pipe leak may have concentration factors of 100 to 1000 lower than a recirculation line break. A steam line break may be a factor of 50 to 100 lower in iodine and particulate concentrations than the recirculation line leak, but the noble gas concentrations may be comparable. An RWCS leak upstream of the demineralizers and heat exchangers may be a factor of 10 to 100 higher than downstream, except for noble gases. Differing coolant temperatures and pressures will affect the flashing fraction and partition factor for iodines and particulates. Thus, an airborne concentration cannot be directly correlated to quantity of leakage without knowing the source of the leakage.

b. Coolant Concentrations - Variations in iodine and particulate concentrations within the reactor coolant during operation can be as much as two orders of magnitude, within a time frame of several hours. These effects are mainly due to spiking during power transients or changes in the use of the RWCS. An increase in the coolant

concentrations could give increased drywell concentrations without an increase in unidentified leakage.

c. Other Sources of Leakage - Because the unidentified leakage is not the sole source of activity in the containment, changes in other sources will result in changes in the containment airborne concentrations. For example, identified leakage is piped to the equipment drain tank in the drywell, but the tank is vented to the drywell atmosphere allowing the release of noble gases and some small quantities of iodines and particulates from the drain tank.

5.2.5.2.2.2 Drywell Conditions Affecting Monitor Performance

a. Equilibrium Activity Levels - During normal operation, the activity release from acceptable quantities of identified and unidentified leakage will build up to significant amounts in the drywell air. Due to these high equilibrium activity levels, the activity increase due to a small increase in leakage may be difficult to detect within a short period of time.

b. Purge and Pressure Release Effects - Changes in the detected activity levels have occurred during containment venting operations. These changes are of the same order of magnitude as approximately a 1GPM leak and are sufficient to invalidate the results from iodine and particulate monitors.

c. Plateout, Mixing, Condensation, Fan Coolant Depletion - Plateout effects on measured iodine and particulate levels will vary with the distance from the coolant release point to the detector. Larger travel distances would result in more plateout. In addition, the pathway of the leakage will influence the plateout effects. For example, a leak from a pipe with insulation will have greater plateout than a leak from an uninsulated pipe. Although the drywell air will be mixed by the fan coolers, it may be possible for a leak to develop in the vicinity of the radiation detector sample lines. In addition, condensation in the coolers and sample lines will remove iodines and particulates from the air. Variations in flow, temperature, and number of coolers will affect the plateout fractions. Plateout within the detector sample chamber will also add to the reduction of the iodine and particulate activity levels. The uncertainties in any estimate of plateout effects could be as much as one or two orders of magnitude.

5.2.5.2.2.3 Capabilities of the Detector

a. Monitor Uncertainties - At high count rates the monitors have dead time uncertainties and the potential for saturating the monitor or the electronics. Uncertainties in calibration (plus or minus 5%), sample flow (plus or minus 10%), and other instrument design parameters tend to make the uncertainty in a count rate closer to 20 to 40% of the equilibrium drywell activity.

b. Monitor Setpoints - Due to the uncertainty and extreme variability of the radioactivity concentrations to be measured in the containment, the use of tight alarm setpoints on the radioactivity monitor would not be practical or useful. The setpoint, which would be required to alarm at 1 GPM, would be well within the bounds of uncertainty of the measurements. The use of such setpoints would result in many unnecessary alarms and the frequent resetting of setpoints. The alarm setpoints for the radiation monitors are set significantly above normal readings to prevent nuisance alarms.

c. Operator Action - There is no direct correlation or known relationship between the detector count rate and the leakage rate because the coolant activity levels, source of leakage, and background radiation levels (from leakage alone) are not known and cannot be cost-effectively determined in existing reactors. There are also several other sources of containment airborne activity (e.g., safety relief valve leakage) that further complicate the correlation.

Thus, the procedure for the control room operator is to set an alarm setpoint on the sump level monitor (measuring water collected in the sump that may not exactly correspond to water leaking from an unidentified source). When the alarm is actuated, the operator will review all other monitors (e.g., noble gas, containment temperature and pressure, air cooler condensate flow, etc.) to determine if the leakage is from the primary coolant pressure boundary and not from an SRV or cooling water system, etc. Appropriate actions will then be taken in accordance with Technical Specifications as applicable. The review of other monitors will consist of comparisons of the increases and rates of increase in the values previously recorded. Increases in all parameters except sump flow will not be correlated to a RCPB leakage rate. Instead, the increases will be compared to normal operating limits and limitations, and abnormal increases will be investigated.

Radiation monitor alarms are not set to levels that are intended to correspond to the RCPB leakage levels because such correlations are not valid. Because the containment airborne activity levels vary by orders of magnitude during operation due to power transients, spiking, steam leaks, and outgasing from sumps, an appropriate alarm setpoint is determined by the operator based on experience with the specific plant. A setpoint level of up to 10 times the level during full power steady state operation may be useful for alarming large leaks and pipe breaks, but it would not always alarm for 1 GPM in one hour and, therefore, could not be considered as any more than a qualitative indication of the presence of abnormal leakage.

Due to the sum total of the uncertainties identified in the previous paragraphs, iodine and particulate monitors are not relied upon for immediate leak detection purposes. The noble gas monitor is used to give supporting information to that supplied by the sump discharge monitoring, and it would be able to give an early warning of a major leak, especially if equilibrium containment activity levels are low. However, the uncertainties and variations in noble gas leaks and concentrations would preclude the setting of a meaningful alarm setpoint. Grab sampling and laboratory analyses of airborne particulate, noble gas, and iodine may be used to characterize leakage detected by other means.

5.2.5.2.3 Leak Detection Instrumentation and Monitoring External to the Drywell

(1) Containment Building Sump In-Leakage Measurement

Instrumentation monitors and indicates the amount of unidentified leakage into the containment building floor drainage system outside the drywell. Identified leakage within primary containment, which includes the upper containment pool, transfer pool liner and separator liner leakage, is piped to the containment floor drain sump. The containment building floor and equipment drain sump instrumentation is similar to the normal drywell floor and equipment drain sump instrumentation. Alternate monitoring systems are not provided.

(2) Visual and Audible Inspection

Accessible areas are inspected periodically and the temperature and flow indicators discussed in this subsection are monitored regularly. Any instrument indication of abnormal leakage will be investigated.

(3) Differential Flow Measurement (Reactor Water Cleanup System Only)

Because of its arrangement the reactor water cleanup system uses the differential flow measurement method to detect leakage. The flow into the cleanup system is compared with flow from the system. An alarm in the control room and an isolation signal are initiated when high differential between flow into the system and flow from the system and/or the main condenser indicates that a leak equal to the established leak rate limit may exist.

(4) Main Steam Line Area Temperature Monitors

High temperature in the main steam line tunnel area is detected by dual element thermocouples. Some of the dual element thermocouples are used for measuring main steam tunnel ambient temperatures and are located in the area of the main steam and RCIC steam lines. The remaining dual elements are used in pairs to provide measurement of differential temperature across the chilled water inlet and outlet of the tunnel area ventilation system coolers. The turbine building main steamlines and steam header are monitored by temperature elements sensing ambient temperature only. All temperature elements are located or shielded so as to be sensitive to air temperatures and not to the radiated heat from hot equipment. One thermocouple of each differential temperature pair is located so as to be unaffected by tunnel temperature. High ambient temperature will alarm in the control room and provide a signal to close the main steam line and steam drain line isolation valves, RCIC steam line isolation valves, and the reactor water cleanup system isolation valves. A high temperature or differential temperature alarm may also indicate leakage in the reactor feedwater line which passes through the main steam tunnel.

(5) Temperature Monitors in Equipment Areas

Dual element thermocouples are installed in the equipment areas and in the inlet and outlet of ventilation cooling water to the RCIC, RHR, and RWCS equipment rooms for sensing high ambient or high differential temperature. The RCIC has two ambient and two pairs of differential temperature elements for its equipment area. The RHR has four ambient and two pairs of differential temperature elements. The RWCS has ten ambient and ten pairs of differential temperature elements. These elements are located or shielded so that they are sensitive to air temperature only and not radiated heat from hot equipment. High ambient temperatures are alarmed in the control room and provide trip signals for closure of isolation valves of the respective system in the monitored area. High differential temperatures provide indication only.

(6) Intersystem Leakage Monitoring

The Intersystem Leakage Monitoring is included in the Process Radiation Monitoring System to satisfy the requirements of that system. Refer to Section 11.5.

(7) Large Leaks External to the Drywell

The main steam line high flow, RCIC steam line high flow and reactor vessel low water level monitoring discussed in section 5.2.5.2.1, paragraphs 11, 12 and 13 can also indicate large leaks from the reactor coolant piping external to the drywell.

(8) The detection of unidentified leakage within the LPCS, HPCS, RCIC and RHR pump cubicles is accomplished by detection of increases in cubicle floor drain sump fillup time and pumpout time. Alarms are provided in the main control room when excessive leakage is detected.

5.2.5.2.4 Summary

Tables 5.2-9a and 5.2-9b summarize the actions taken by each leakage detection function. The table shows that those systems which detect gross leakage initiate an alarm and immediate automatic isolation. The systems which are capable of detecting small leaks initiate only an alarm in the control room. In addition, the tables show that two or more leakage detection systems are provided for each system or area that is a potential source of leakage. Plant operating procedures will dictate the action an operator is to take upon receipt of an alarm from any of these systems. The operator can manually isolate the violated system or take other appropriate action. A time delay is provided before automatic isolation of the Reactor Core Isolation Cooling System on a high ambient temperature in the main steam tunnel so that the MSIV's and RWCS can be isolated first and thereby preserve the operation of the RCIC system for core cooling. A time delay is also provided for the RWCS differential flow to prevent normal system surges from isolating the system.

The Leak Detection System is a multi-dimensional system which is redundantly designed so that failure of any single element will not interfere with a required detection of leakage or isolation.

In the four division portion of the LD&IS, applied where inadvertent isolation could impair plant performance (e.g., Main Steamline Isolation Valves), any single channel or divisional component malfunction will not cause a false indication of leakage or false isolation trip because it will only trip one of four channels. It thus combines a very high probability of operating when needed with a very low probability of operating falsely. The system is testable during plant operation.

5.2.5.3 Indication in Control Room

Leak detection methods are discussed in subsection 5.2.5.1. Details of the leakage detection system indications are included in subsection 7.6.1.4.3 and 7.7.1.24.10.

5.2.5.4 Limits for Reactor Coolant Leakage

5.2.5.4.1 Total Leakage Rate

The total leakage rate consists of all leakage, identified and unidentified, that flows to the drywell floor drain and equipment drain sumps. The total leakage rate limit is well within the makeup capability of the RCIC system and is established low enough to prevent overflow of the sumps. The equipment sump and the floor drain sump, which collect all leakage, are each pumped out by two 100% capacity pumps.

The limit for acceptable identified leakage (associated with the drywell equipment sump) is established at 25 gpm. The limit for acceptable unidentified leakage (associated with the drywell floor drain sump) is established at 5 gpm.

5.2.5.4.2 Identified Leakage Inside Drywell

The pump packing glands, valve stems, and other seals in systems that are part of the reactor coolant pressure boundary and from which normal design identified source leakage is expected are provided with leak-off drains. Nuclear system valves and pumps inside the drywell are equipped with double seals. Leakage from the primary recirculation pump seals is monitored for flow in the drainline and piped to the equipment drain sump. Leakage from the main steam safety/relief valves discharging to the suppression pool is monitored by temperature sensors that transmit to the control room. Any temperature increase above the ambient temperature detected by these sensors indicates valve leakage.

Thus, the leakage rates from pumps, valve stem packings, and the reactor vessel head seal, which all discharge to the equipment drain sump, are measured during plant operation.

5.2.5.5 Unidentified Leakage Inside the Drywell

5.2.5.5.1 Unidentified Leakage Rate

The unidentified leakage rate is the portion of the total leakage rate received in the drywell sumps that is not identified as previously described. A threat of significant compromise to the nuclear system process barrier exists if the barrier contains a crack that is large enough to propagate rapidly (critical crack length). The unidentified leakage rate limit must be low because of the possibility that most of the unidentified leakage rate might be emitted from a single crack in the nuclear system process barrier.

An allowance for leakage that does not compromise barrier integrity and is not identifiable is made for normal plant operation.

The unidentified leakage rate limit is established at 5 gpm rate to allow time for corrective action before the process barrier could be significantly compromised. This 5 gpm unidentified leakage rate is a small fraction of the calculated flow from a critical crack in a primary system pipe (Figure 5.2-13).

5.2.5.5.2 Sensitivity and Response Times

Sensitivity, including sensitivity tests and response time of the leak detection system, is covered in Section 5.2.5.10.

5.2.5.5.3 Length of Through-Wall Flaw

Experiments conducted by GE and Battelle Memorial Institute, (BMI), permit an analysis of critical crack size and crack opening displacement (Reference 4). This analysis relates to axially oriented through-wall cracks.

(1) Critical Crack Length

Satisfactory empirical expressions to predict critical crack length have been developed to fit test results. A simple equation which fits the data in the range of normal design stresses (for carbon steel pipe) is

$$L_C = \frac{15000D}{\sigma h}$$ (see data correlation on Figure 5.2-14)

where

L_c = critical crack length (in.)

D = mean pipe diameter (in.)

σ_h = nominal hoop stress (psi).

(2) Crack Opening Displacement

The theory of elasticity predicts a crack opening displacement of

$$\varpi = \frac{2L\sigma}{E}$$

where

L = crack length

σ = applied nominal stress

E = Young's modulus

Measurements of crack opening displacement made by BMI show that local yielding greatly increases the crack opening displacement as the applied stress σ approaches the failure stress σ_f. A suitable correction factor for plasticity effects is:

$$C = \sec\left(\frac{\pi}{2}\frac{\sigma}{\sigma_f}\right) \qquad (5.2\text{-}2)$$

The crack opening area is given by

$$A = C\frac{\pi}{4} \quad \omega L = \frac{\pi L^2 \sigma}{2E} \quad \sec \quad \frac{\pi\sigma}{2\sigma_f} \qquad (5.2\text{-}3)$$

For a given crack length L, σ_f = 15,000 D/L.

(3) Leakage Flow Rate

The maximum flow rate for blowdown of saturated water at 1000 psi is 55 lb/sec- in^2 and for saturated steam the rate is 14.6 lb/sec-in^2, (Reference 5). Friction in the flow passage reduces this rate, but for cracks leaking at 5 gpm (0.7 lb/sec) the effect of friction is small. The required leak size for 5 gpm flow is

A = 0.0126 in^2 (saturated water)

A = 0.0475 in^2 (saturated steam)

From this mathematical model, the critical crack length and the 5 gpm crack length have been calculated for representative BWR pipe size (Schedule 80) and pressure (1050 psi).

The lengths of through-wall cracks that would leak at the rate of 5 gpm given as a function of wall thickness and nominal pipe size are:

Nominal Pipe Size (Sch 80), in.	Average Wall Thickness, in.	Crack Length L, in. Steam Line	Water Line
4	0.337	7.2	4.9
12	0.687	8.5	4.8
24	1.218	8.6	4.6

The ratios of crack length, L, to the critical crack length, Lc as a function of nominal pipe size are:

Nominal Pipe Size (Sch 80), in.	Ratio L/Lc	
	Steam Line	Water line
4	0.745	0.510
12	0.432	0.243
24	0.247	0.132

It is important to recognize that the failure of ductile piping with a long, through-wall crack is characterized by large crack opening displacements which precede unstable rupture. Judging from observed crack behavior in the GE and BMI experimental programs, involving both circumferential and axial cracks, it is estimated that leak rates of hundreds of gpm will precede crack instability. Measured crack opening displacements for the BMI experiments were in the range of 0.1 to 0.2 in. at the time of incipient rupture, corresponding to leaks of the order of 1 sq in. in size for plain carbon steel piping. For austenitic stainless steel piping, even larger leaks are expected to precede crack instability, although there are insufficient data to permit quantitative prediction.

The results given are for a longitudinally oriented flaw at normal operating hoop stress. A circumferentially oriented flaw could be subjected to stress as high as the 550°F yield stress, assuming high thermal expansion stresses exist. It is assumed that the longitudinal crack, subject to a stress as high as 30,000 psi, constitutes a "worst case" with regard to leak rate versus critical size relationships. Given the same stress level, differences between the circumferential and longitudinal orientations are not expected to be significant in this comparison.

Figure 5.2-13 shows general relationships between crack length, leak rate, stress, and line size, using the mathematical model described previously. The asterisks denote conditions at which the crack opening disp]acement is 0.1 in., at which time instability is imminent as noted previously under "Leakage Flow Rate". This provides a realistic estimate of the leak rate to be expected from a crack of critical size. In every case, the leak rate from a crack of critical size is significantly greater than the 5 gpm criterion.

If either the total or unidentified leak rate limits are exceeded, an orderly shutdown is initiated and the reactor is placed in a cold shutdown condition within 36 hours.

5.2.5.5.4 Margins of Safety

The margins of safety for a detectable flaw to reach critical size are presented in subsection 5.2.5.5.3. Figure 5.2-13 shows general relationships between crack length, leak rate, stress and line size using the mathematical model.

5.2.5.5.5 Criteria to Eva]uate the Adequacy and Margin of the Leak Detection System

For process lines that are normally open, there are at least two different methods of detecting abnormal leakage from each system within the nuclear system process barrier located in the drywell, reactor building, and auxiliary building as shown in Tables 5.2-9a and 5.2-9b. The instrumentation is designed so it can be set to provide alarms at established leakage rate limits and isolate the affected system, if necessary. The alarm points are determined analytically or based on measurements of appropriate parameters made during startup and preoperational tests.

The unidentified leakage rate limit is based, with an adequate margin for contingencies, on the crack size large enough to propagate rapidly. The established limit is sufficiently low so that, even if the entire unidentified leakage rate were coming from a single crack in the nuclear system process barrier, corrective action could be taken before the integrity of the barrier would be threatened.

The leak detection system will satisfactorily detect unidentified leakage of 5 gpm.

5.2.5.6 Differentiation Between Identified and Unidentified Leaks

Subsection 5.2.5.1 describes the systems that are monitored by the leak detection system. The ability of the leak detection system to differentiate between identified and unidentified leakage is discussed in subsections 5.2.5.4, 5.2.5.5, and 7.6.

5.2.5.7 Sensitivity and Operability Tests

Sensitivity, including sensitivity testing and response time of the leak detection system, and the criteria for shutdown if leakage limits are exceeded, are covered in section 7.6.

Testability of the leakage detection system is contained in section 7.6.

5.2.5.8 Safety Interfaces

The Balance of Plant-GE Nuclear Steam Supply System safety interfaces for the Leak Detection System are the signals from the monitored balance of plant equipment and systems which are

part of the nuclear system process barrier, and associated wiring and cable lying outside the Nuclear Steam Supply System Equipment.

5.2.5.9 Testing and Calibration

Provisions for testing and calibration of the leak detection system are covered in Chapter 14.0 “Initial Test Program”.

In addition, the drywell floor drain sump inlet piping is verified to be unblocked at least once per 24 months during plant shutdown. This ensures that leakage from unidentified sources inside the drywell is being collected in drywell floor drain sump and is being monitored.

5.2.5.10 Regulatory Guide 1.45 Compliance

The detection of leakage through the reactor coolant pressure boundary, described in the preceeding subsections, is in compliance with Regulatory Guide 1.45. Details of compliance are discussed in the following:

Leakage is separated into identified and unidentified categories and each is independently monitored, thus meeting position C.1 of Regulatory Guide 1.45.

Leakage from unidentified sources inside the drywell is collected into the floor drain sump and monitored with an accuracy better than 1 gallon per minute, thus meeting position C.2 of Regulatory Guide 1.45.

By monitoring 1) floor drain sump flow, 2) airborne gases or particulates, and 3) air coolers condensate flow rate, position C.3 is satisfied.

Monitoring intersystem leakage into the Component Cooling Water System using the surge tank level instrument, and monitoring of cooling water for radiation from the RHR and RWCS heat exchangers satisfies position C.4. For radiation monitoring system detail, see Process Radiation Monitoring System, Section 11.5.

The floor drain sump monitoring and air cooler condensate monitoring are designed to detect leakage rates of 1 gpm within 1 hour except as described in USAR section 1.8. The air particulate monitor will not detect leakage rates of 1 gpm in 1 hour due to substantial limitations as discussed in Section 5.2.5.2.2. This is an exception to position C.5.

The particulate channel of the fission products monitoring sub-system is qualified for SSE. The containment floor drain sump and air coolers are not required to operate during and after seismic events, thus meeting position C.6. It must be noted, however, that administrative procedures can be utilized to verify operability following a seismic event if required.

Procedures for converting various indications to a common leakage equivalent are available to the operators. The calibration of the indicators accounts for needed independent variables. Leak detection indicators and alarms are provided in the main control room. This satisfies position C.7.

The leakage detection system is equipped with provisions to permit testing for operability and calibration during the plant operation using the following methods:

(1) simulation of signals into trip units

(2) comparing channel “A” to channel “B” of the same leak detection method (e.g., area temperature monitoring)

(3) operability checked by comparing one method versus another (e.g., sump fillup versus pumpout, particulate monitoring air cooler condensate flow versus sump fillup rate)

(4) continuous monitoring of floor drain sump level is provided

These satisfy position C.8.

The Bases for the Technical Specifications discuss the various types of leak detection instrumentation. The limits and applicability are stated in the Technical Specifications. Limiting unidentified leakage to 5 gpm and identified leakage to 25 gpm satisfies position C.9.

5.2.6 References

(1) R. Linford, “Analytical Methods of Plant Transient Evaluation for the General Electric Boiling Water Reaction,” NEDO-10802, April 1973.

(2) J. M. Skarpelos and J. W. Bagg, “Chloride Control in BWR Coolants,” June, 1973, NEDO-10899.

(3) W. L. Williams, Corrosion, Vol. 13, 1957, p. 539t.

(4) GEAP-5620, Failure Behavior in ASTM A106B Pipes Containing Axial Through-Wall Flaws, by M. B. Reynolds, April, 1968.

(5) “Investigation and Evaluation of Cracking in Austenitic Stainless Steel Piping of Boiling Water Reactor Plants,” NUREG-76/067, NRC/PCSG, dated October 1975.

(6) “Vessel Overpressure Transient Analysis”, GE Document No. 457HA213.

(7) Standard for Light Water Reactor Coolant Pressure Boundary Leak Detection, ANSI/ISA 67.03-1982.

(8) “SRV Safety Setpoint Tolerance and Out-of-Service Analysis for Clinton Power Station,” General Electric Company Report NEDC-32202P, August 1993.

TABLE 5.2-1
REACTOR COOLANT PRESSURE BOUNDARY COMPONENTS
APPLICABLE CODE CASES

	APPLICABLE COMPONENT	
1141-1	RPV	Foreign Produced Steel
1332-6	RPV	Requirements for Steel Forgings
1361-2	CRD	Socket Welds
1535-2	MSIV	Hydrostatic Testing of Section III Class I Valves
1557-2	RPV	Steel Product Refined by Secondary Remelting
1571	Main Steam System Pipe	Additional Material for SA234 Carbon Steel Fittings Section III
1572	RPV	Fracture Toughness, Section IV, Class 1 Components
1620	RPV	Stress Category for Partial Penetration Welded Penetrations Section III, Class 1 Construction
1622	MSIV	PWHT of Repair Welds in Carbon Steel Castings, Section III, Classes 1, 2, and 3.
1637	Recirc. Pump, HPCS Valve	Effective date for Compliance with NA-3700 of Section III
N207	CRD	Use of Modified SA-479 Type XM-19 for Section III, Div. 1, Class 1, 2 or 3 Construction.
1567	HPCS Valve	Testing Lots of Carbon and Low-Alloy steel covered electrodes, Section III.

TABLE 5.2-2
NUCLEAR SYSTEM SAFETY/RELIEF
SET PRESSURES AND CAPACITIES

(See Reference 6)

No. of Valves	Spring Set Pressure (Psig)	ASME Rated Capacity @ 103% Spring Set Pressure (1lb/hr each)	Relief Pressure Set Pressure (psig)	Low-Low Set Relief	
				No. of Valves	Setpoint Open/Close
7	1165	895,000			
5	1180	906,000			
4	1190	913,000			
1			1103*	1	1033/926
8			1113*	1	1073/936
				3	1113/946
7			1123*		

* Closing setpoint is 100 psi below opening setpoint.

Note: Seven of the Safety/Relief Valves serve in the Automatic Depressurization Function.

TABLE 5.2-3
PRESERVICE EXAMINATION COVERAGE

Code Class	Coverage	Code Edition/Addenda 1974/ Summer 1975	Code Edition/Addenda 1977/ Summer 1978
1	Selection/Exemption Criteria		
	Components, supports, bolting	X	
1	NDE Methods and Acceptance Criteria		
	Components (except piping), bolting	X	
1	Piping, supports		X
1	Visual Methods and Acceptance Criteria		
	Component, supports, bolting		X

TABLE 5.2-4
REACTOR COOLANT PRESSURE BOUNDARY MATERIALS

COMPONENT	FORM	MATERIAL	SPECIFICATION (ASTM/ASME)
Reactor Vessel Heads, Shells	Rolled Plate or Forgings	Low Alloy Steel	SA 533 Gr. B Class 1 or SA 508 Cl. 2
	Welds	Low Alloy Steel	SFA 5.5
Closure Flange	Forged Ring	Low Alloy Steel	SA 508 Cl. 2
	Welds	Low Alloy Steel	SFA 5.5
Nozzles	Forged Shapes	Low Alloy Steel	SA 508 Cl. 2
	Welds	Low Alloy Steel	SFA 5.5
Nozzle Safe Ends	Forgings or Plate	Stainless Steel	SA 182, F304, or F316SA 336, F8 or F8MSA 240, 304 or 316
	Welds	Stainless Steel	SFA 5.9 TP. 308L or 316LSFA 5.4 TP. 308L or 316L
Nozzle Safe Ends	Forgings	Ni-Cr-Fe	SB166 or SB167
	Welds	Ni-Cr-Fe	SFA 5.14 TP. ER Ni-Cr-3 or SFA 5.11 TP. EN Cr Fe-3
Nozzle Safe Ends	Forgings	Carbon Steel	SA 105 Gr 2, SA 106 Gr B or SA 508 CL. 1
	Welds	Carbon Steel	SFA 5.1, SFA 5.18 GPA, or SFA 5.17 F70.
Cladding	Weld Overlay	Austenitic Stainless Steel	N/A
Main Steam Piping			
Pipe	Seamless Pipe	Carbon Steel	SA333GR.6(G.E.B50yP15z)
L. R. Elbow	Fitting	Carbon Steel	SA-234GR.WPBW with Code Case 1571
Nozzle	Forging	Carbon Steel	SA-105
Lugs	Plate	Carbon Steel	SA-516 GR.70
Relief Valve Piping			
Pipe	Seamless	Carbon Steel	SA-106 GR.B
Elbow	Fitting	Carbon Steel	SA-234 GR.WPB
Pipe	Seamless	Carbon Steel	SA-106 GR.B
Boss	Plate	Carbon Steel	SA-516 GR.70

TABLE 5.2-4
REACTOR COOLANT PRESSURE BOUNDARY MATERIALS (Continued)

COMPONENT	FORM	MATERIAL	SPECIFICATION (ASTM/ASME)
Mounting Flange	Plate	Carbon Steel	SA-516 GR.70
Flange	Weld Neck	Carbon Steel	SA-105
Ball Joint	Fitting	Carbon Steel	SA-234 GR.WPB
Ricirculation Piping			
Pipe	Welded Pipe	Stainless	SA-358-GR.304 Class 1
Pipe	Seamless	Stainless	SA-376-TP.304
Cross	Fitting	Stainless	SA-403GR.WP304
Red Tee	Fitting	Stainless	SA-403GR.WP304W
L.R. Elbow	Fitting	Stainless	SA-403GR.WP304W
Conc. Reducer	Fitting	Stainless	SA-403GR.WP304 or WP304W
Std. Cap	Fitting	Stainless	SA-403GR.WP304 or WP304W
Contour Nozzle	Fitting	Stainless	SA-403GR.WP304
Flange	Forging	Stainless	SA-182 GR.F316
Decon. Flange	Bolt	Stainless	SA-193GR.B7
Decon. Flange	Hexnut	Stainless	SA-194GR.7
Pipe	Seamless		SA-376*
Pipe	Welded Pipe		SA-358*
Elbow	Fitting		SA-403*
CRD			
CRD Flanges	Forging	Austenitic Stainless Steel	SA182
CRD Nut, base	Bar	XM-19	SA-479
CRD Indicator Tube	Pipe	Austenitic Stainless Steel	SA312GR.TP316
CRD Housing	Tube	Stainless Steel	SA312
	Tube	Inconel 600	SB167

* TP316 Carbon .020 Wt/% Max

TABLE 5.2-4
REACTOR COOLANT PRESSURE BOUNDARY MATERIALS (Continued)

COMPONENT	FORM	MATERIAL	SPECIFICATION (ASTM/ASME)
Flange	Forging	Stainless Steel	SA182
	Welds	Stainless Steel	SFA5.9 ER308L or ER308Si SFA5.4 E308L
	Welds	Inconel	SFA 5.11 ENiCrFe-3 SFA 5.14 ERNiCr-3
Incore Housing	Tube	Inconel	SB167
Flange	Forging	Stainless Steel	SA 182
	Welds	Inconel	SFA 5.11 ENiCrFe-3 SFA 5.14 ERNiCr-3
Main Steamline Flow Element	Forged	Carbon steel	SA105
Main Steam Isolation Valve			
Body	Casting	Carbon Steel	SA216GrWCB
Disc	Forging	Carbon steel	SA350GRLF2
Cover	Forging	Carbon steel	SA-105
Stem	Rod	Stainless steel	SA564GR630
Studs	Bolt	Alloy Steel	SA540 B23 CL5
Nuts	Bolt	Alloy Steel	SA540 B23 CL5
Main Steam Safety Relief Valve			
Body	Casting	Carbon Steel	SA 352 LCB
Seat	Forging	Carbon Steel	SA 350 LF2
Disc	Casting	Stainless Steel	SA 351 CF3A

TABLE 5.2-4
REACTOR COOLANT PRESSURE BOUNDARY MATERIALS (Continued)

COMPONENT	FORM	MATERIAL	SPECIFICATION (ASTM/ASME)
Recirculation			
Gate Valves			
Body	Casting	Stainless Steel	SA351 GR CF8M
Bonnet	Casting	Stainless Steel	SA351 GR CF8M
Stem	Bar	Stainless Steel	SA564 Type 630 Condition 1150
Disc	Casting or	Stainless Steel	
	Forged	Stainless Steel	SA351 CF3A
			SA182 Gr F347
Nuts	Bar	Carbon Steel	SA194GR7
Bolts	Bar	Carbon Steel	SA193GRB7
*Only for 1B21-F022B,C,D and 1B21-F028A.			
Recirculation Pump			
Pump Case Casting	Cast	Stainless St.	SA351 GR CF8M
Lifting Lug	Plate	Stainless St.	SA240 Type 304/316
Shock Suppressor Lug	Plate	Stainless St.	SA240 Type 316
Shock Suppressor Lug	Plate	Stainless St.	SA240 Type 316
Shock Suppressor Lug	Plate	Stainless St.	SA240 Type 316
Stud-Case to Stuff. Box (31/4-8N)	Bar	Alloy Steel	SA540 GR B23 C1 5
Stud Nut (31/4-8N)	Bar	Alloy Steel	SA194 Gr 7
Stuffing Box Casting	Cast	Stainless St.	SA351 CF8M
Nozzle - 1"	Forging	Stainless St.	SA182 Type F304/F316
Nozzle - 1"	Forging	Stainless St.	SA182 Type F304/F316
Nozzle - 3/4"	Forging	Stainless St.	SA182 Type F304/F316
Flange Nozzle - 1"	Forging	Stainless St.	SA182 Type F304/F316
Flange 1" - 150# ASA Soc Weld	Forging	Stainless St.	SA182 Type F304/F316
Lifting Lugs	Plate	Stainless St.	SA240 Type 304/316

TABLE 5.2-4
REACTOR COOLANT PRESSURE BOUNDARY MATERIALS (Continued)

COMPONENT	FORM	MATERIAL	SPECIFICATION (ASTM/ASME)
Flange Nozzle 3/4"	Forging	Stainless St.	SA182 Type F304/F316
Flange 3/4" - 1500# Soc Weld	Forging	Stainless St.	SA182 Type F304/F316
Thrust Ring	Forging	Stainless St.	SA182 Type F304/F316
Pump Flange	Forging	Carbon St.	SA350 Gr LF2
Motor Stand Barrel	Plate	Carbon St.	SA516 Gr 70
Brace	Plate	Carbon St.	SA516 Gr 70
Brace	Plate	Carbon St.	SA516 Gr 70
Strut Lug	Plate	Carbon St.	SA36
Strut Lug	Plate	Carbon St.	SA36
Seal Holder	Cast	Stainless St.	SA351 GR. CF 8
Plug	Forging	Stainless St.	SA182 GR. F304
Upper Seal Gland	Cast	Stainless St.	SA351 GR. CF 8
Clamp - 1" Pipe Size	Cast	Stainless St.	SA351 Gr CF8/CF8M
Stud Complete w/Nuts	Bar	Alloy St.	SA193 Gr B8/ASME SA194 GR 8
Pipe - 1" Sch 80 (.179 Wall)	Pipe	Stainless St.	SA312 Gr TP 304/316
Hub - 1" - Soc Weld	Forging	Stainless St.	SA182 Type F304/F316
Tee - 1" Pipe 3000# Soc Weld	Forging	Stainless St.	SA182 Type F304/ F316
Thermowell for 1" Tee	Forging	Stainless St.	SA182 Type F304/ F316
Pipe - 1" Sch 80 .179 Wall)	Pipe	Stainless St.	SA312 Gr TP 304/316
Flange-1"-1500# Soc Weld Lg Grv	Forging	Stainless St.	SA182 Type F304/ F316
Hub-1" Soc Weld	Forging	Stainless St.	SA182 Type F304/ F316
Tee-1" Pipe3000# Soc Weld	Forging	Stainless St.	SA182 Type F304/ F316
Thermowell for 1" Tee	Forging	Stainless St.	SA182 Type F304/ F316

TABLE 5.2-4
REACTOR COOLANT PRESSURE BOUNDARY MATERIALS (Continued)

COMPONENT	FORM	MATERIAL	SPECIFICATION (ASTM/ASME)
Pipe Plug-3/4" NPT	Forging	Stainless St.	SA182 Type F304/ F316
Pipe 3/4 Sch 80 (.154 Wall)	Pipe	Stainless St.	SA312 Gr TP 304/ F316
Tee 3/4" Pipe 3000# Soc Weld	Forging	Stainless St.	SA182 Type F304/ F316
Thermowell for 3/4" Tee	Forging	Stainless St.	SA182 Type F304/ F316
Flange 3/4-1500# Soc Weld Lg Grv	Forging	Stainless St.	SA182 Type F304/ F316
Hub - 3/4" Soc Weld	Forging	Stainless St.	SA182 Type F304/
Valve Body	Plate	Stainless St.	SA240 Type 304/316
Valve Bonnet	Plate	Stainless St.	SA240 Type 304/316
Coil Inner 1 1/4 Tube x .065 wall	Pipe	Stainless St.	SA213 Gr TP 316
Tee 1 1/4 Tube x 1" Pipe Run 3000#	Forging	Stainless St.	SA182 Type F304/F316
Pipe Cap 1" Soc Weld - 3000#	Forging	Stainless St.	SA182 Type F304/F316
Flange 1" -1500# Soc Weld Lg Groove	Forging	Stainless St.	SA182 Type F304/F316
Hub 1" Soc Weld	Forging	Stainless St.	SA182 Type F304/F316
Pipe 1" Sch 80 (.179 wall)	Pipe	Stainless St.	SA312 Gr TP 304/TP 316

TABLE 5.2-5
RCPB PUMP AND VALVE DESCRIPTION

THIS TABLE HAS BEEN DELETED.

TABLE 5.2-6
TYPICAL BWR WATER CHEMISTRY[A]

	CONCENTRATIONS - PARTS PER BILLION (ppb)				CONDUCTIVITY (µmho/cm - (pH -	
	IRON	COPPER	CHLORIDE	OXYGEN	25°C)	25°C
Condensate (1)*	15-30	3-5	20	20-50	≈0.1	≈ 7
Condensate Treatment Effluent (2)*	5-15	1	≈ 0.2	20-50	0.1	7
Feedwater (3)*	5-15	1	≈ 0.2	20-50	0.1	7
Reactor Water (4)*						
Mode 1	10-50	20	200	100-300	1.0	5.6-8.6
Mode 2 and 3	10-50	20	100	100-300	2.0	5.6-8.6
Mode 4 and 5	10-50	20	500	8000	10.00	5.3-8.6
Steam (5)*	0	0	0	10000-30000	0.1	
Control Rod Drive Cooling Water (6)*	50-500	-	20	50	0.1	7

* Numerals in parentheses refer to locations delineated on Figure 5.2-11

≈ Represents the word approximately

A Chemistry limits are specified in plant procedures

TABLE 5.2-7
SYSTEMS WHICH MAY INITIATE DURING OVERPRESSURE EVENT

SYSTEMS	INITIATING/TRIP SIGNAL (S) *
Reactor Protection System RCIC	Reactor trips "OFF" on High Flux
	"ON" when Reactor Water Level at L2
	"OFF" when Reactor Water Level at L8
HPCS	"ON" when Reactor Water Level at L2
	"ON" when Drywell Pressure at 2 psig
	"OFF" when Reactor Water Level at L8
Recirculation System	"OFF" when Reactor Water Level at L2
	"OFF" when Reactor Pressure at 1127 psig
RWCU	"OFF" when Reactor Water Level at L2

* Vessel level trip settings are shown on Figure 5.3-2.

Table 5.2-8
WATER SAMPLE LOCATIONS

Sample Origin	Sensor Location	Indicator Location	Recorder Location	Range	Conductivity (µmho/cm) Alarm High	Setpoint Low	Minimum Loop Accuracy
Reactor Water Recirculation Loop	Sample Line	Panel G33-Z020	Control Room	0.1-10*	1.0	0.05	±1.1***
Reactor Water Cleanup System Inlet	Sample Line	Panel G33-Z020	Control Room	0.1-10*	1.0	0.05	±1.1***
Reactor Water Cleanup System Outlets	Sample Line	Panel G33-Z020	Control Room	0.01-1**	0.1	0.02	±1.1
Control Rod Drive System	Sample Line	Panel G33-Z020	Control Room	0.01-1**	0.1	0.05	±1.1

* The instrument is nonlinear with 1 µmho/cm near midscale to facilitate readings at the normally low levels (i.e., 1 µmho/cm).

** The instrument is nonlinear with 0.1 µmho/cm near midscale.

*** The accuracy is expressed as percent of full scale. The instruments are sensitive to within or less than the accuracy, and at least one of these instruments is periodically (1/week) verified against laboratory calibration instruments.

Table 5.2-9a
SUMMARY OF ISOLATION/ALARM OF SYSTEM MONITORED
AND THE LEAK DETECTION METHODS USED

(Summary of Variable Trip Alarms Leakage Source
vs. Generated Variables)

	Affected Variable Monitored																				
Source of Leakage	a	b	c	d	e	f	g	h	i	j	k	l	m	n	o	p	q	r	s	t	u	v
Main Steamline	X		A	A	A		A	A	A	A				A	A							
		X		A											A	A	A					
RCIC Steamline	X		A	A	A		A	A						A	A							
8” Nominal Size		X		A											A	A	A	A				
RCIC Steamline	X																					
4” Nominal Size		X		A											A	A	A	A				
RWCU Water	X		A	A	A		A	A			A			A					A		A	
		X		A	A											A	A	A	A			
HPCS Water	X				A						A											A
		X																				
LPCS Water	X				A						A											A
		X																				
Recirc Pump Seal	X					A	A					A										
		X																				
Feedwater	X		A	A	A		A	A						A								
		X		A												A	A					
RHR Water	X		A	A	A		A	A			A			A								A
		X			A											A		A			A	
Reactor Vessel	X												A									
Head Seal		X																				
Upper Containment	X					A														A		
Pool		X														A				A		
Miscellaneous	X				A																	
Leaks		X			A											A						
Valve Stem Packing	X					A					A											
		X																				
RCIC Water	X				A																	
		X																				

A = Alarm and indicate (or record) only.

X = Location of leakage source.

Legend of Table 5.2-9a

a. Located Inside Drywell

b. Located Outside Drywell

c. Drywell Pressure, High

d. Reactor Water Level, Low

e. Floor Drain Sump Fillup Rate, High (Containment)

f. Equipment Drain Sump Flow Rate, High (Containment)

g. Fission Product Radiation, High

h. Drywell Temperature, High

i. Safety/Relief Valve Discharge Pipe Temperature, High

j. MSL Guard Pipe Temperature, High

k. Valve Stem Leakoff Temperature, High

l. Recirculation Pump Seal Flow, High

m. Seal Pressure, High

n. Air Cooler Condensate Flow, High

o. Steam Flow Rate, High

p. Sump or Drain Flow, High (Equipment Area)

q. MSL Tunnel Ambient, High

r. Equipment Area Ambient, High

s. RWCU Differential Flow, High

t. Seal Drain Flow, High

u. Intersystem Leakage (Radiation), High

v. ECCS Injection Line Leakage (Internal to Reactor Vessel) Differential Pressure

TABLE 5.2-9b
SUMMARY OF ISOLATION/ALARM OF SYSTEM MONITORED
AND THE LEAK DETECTION METHODS USED

(Summary of Isolation Signals and Alarms
System Isolation vs. Variable Monitored)

System Isolated**	Variable Monitored															
	a	b	c	d	e	f	g	h	i	j	k	l	m	n	o	p
Main Steam	I	I	I		I											
Recirc (Sample line)	I															
RHR	I					I	I									
RCIC			I			I*			I		I	I	I			
RWCU	I		I											I	I	
Containment Isolation	I					I										

** Systems or selected valves within the system that isolate.

I - Isolate alarm, and indicate (or record).

* RCIC turbine exhaust vacuum breaker line valves only.

---

a. Reactor Vessel Water Level

b. Turbine Building Leak Detection

c. MS Tunnel Ambient Temperature, High

d. Deleted

e. MS Line Flow Rate, High

f. Drywell Pressure, High

g. RHR Equipment Area Ambient Temperature, High

h. Deleted

i. RCIC Equipment Area Ambient Temperature, High

j. Deleted

k. RCIC Exhaust Diaphragm Pressure, High

l. RCIC Steam Supply Differential Pressure (High Flow)

m. RCIC Steam Supply Differential Pressure (Instr. Line Break)

n. RWCU Process Piping Differential Flow, High

o. RWCU Equipment Area Ambient Temperature, High

p. Deleted

TABLE 5.2-10
SEQUENCE OF EVENTS FOR Figure 5.2-1[1]

TIME-SEC	EVENTS
0	Initiate closure of all main steam isolation valves (MSIV)
0.3	MSIVs reached 90% open and initiated reactor scram. However, hypothetical failure of this position scram was assumed in this analysis.
1.6	Neutron flux reached the APRM flux scram setpoint and initiated reactor scram.
2.3	Reactor dome pressure reached the pressure setpoint (power actuated mode). Only one half of valves in this group was assumed functioning.
2.3	Steamline pressure reached the safety/relief valve pressure setpoint (spring action mode). Valves which were not opened in the power actuated mode were opened.
3.0	MSIVs completely closed.
3.4	Safety/relief valves opened in either power actuated mode or spring action mode due to high pressure.
3.4	Vessel bottom pressure reached its peak value.
12.6	Safety/Relief valves opened in their spring action mode closed.
19.2 (est)	Safety/relief valves opened in their power-actuated mode closed.
50 (est)	Reactor reached a limited cycle.

Note: 1. This sequence of events was assumed for the initial cycle analysis of safety/relief valve capacity. The results of the current cycle analysis for this transient are provided in Appendix 15D, Reload Analysis.

5.3 REACTOR VESSEL

5.3.1 Reactor Vessel Materials

5.3.1.1 Materials Specifications

The materials used in the reactor pressure vessel and appurtenances are shown in Table 5.2-4 together with the applicable specifications.

5.3.1.2 Special Processes Used for Manufacturing and Fabrication

The reactor pressure vessel is primarily constructed from low alloy, high strength steel plate and forgings. Plates are ordered to ASME SA 533 Grade B, Class 1, and forgings to ASME SA508, Class 2. These materials are melted to fine grain practice and are supplied in the quenched and tempered condition. Further restrictions include a requirement for vacuum degassing to lower the hydrogen level and improve the cleanliness of the low alloy steels. Materials used in the core beltline region also specify limits of 0.12% maximum copper and 0.015% maximum phosphorus content in the base materials, and a 0.10% maximum copper and 0.025% maximum phosphorus content in weld materials.

Studs, nuts, and washers for the main closure flange are ordered to ASME SA 540, Grade B23 or Grade B24. Welding electrodes are low hydrogen type ordered to ASME SFA 5.5.

All plate, forgings, and bolting are 100% ultrasonically tested and surface examined by magnetic particle methods or liquid penetrant methods in accordance with ASME Section III, Subsection NB standards. Fracture toughness properties are also measured and controlled in accordance with subsection NB requirements.

All fabrication of the reactor pressure vessel is performed in accordance with GE approved drawings, fabrication procedures, and test procedures. The shells and vessel heads are made from formed plates, and the flanges and nozzles from forgings. Welding performed to join these vessel components is in accordance with procedures qualified per ASME Section III and IX requirements. Weld test samples are required for each procedure for major vessel full penetration welds. Tensile and impact tests are performed to determine the properties of the base metal, heat affected zone and weld metal.

Submerged arc and manual stick electrode welding processes are employed. Electroslag welding is not permitted. Preheat and interpass temperatures employed for welding of low alloy steel meet or exceed the requirements of ASME Section III, Subsection NA. Post weld heat treatment at 1100°F minimum is applied to all low alloy steel welds.

Radiographic examination is performed on all pressure containing welds in accordance with requirements of ASME Section III, Subsection NB 5320. In addition, all these welds are given a supplemental ultrasonic examination.

The materials, fabrication procedures, and testing methods used in the construction of BWR reactor pressure vessels meet or exceed requirements of ASME Section III Class 1 vessels.

5.3.1.3 Special Methods for Nondestructive Examination

The materials and welds on the reactor pressure vessel were examined in accordance with methods prescribed and meet the acceptance requirements specified by ASME Boiler and Pressure Vessel Code, Section III. In addition, the pressure retaining welds were ultrasonically examined using manual techniques. The ultrasonic examination method, including calibration, instrumentation, scanning sensitivity, and coverage was based on the requirements imposed by ASME Code, Section XI in Appendix I. Acceptance standards were equivalent to or more restrictive than required by ASME Code, Section XI.

5.3.1.4 Special Controls For Ferritic and Austenitic Stainless Steels

5.3.1.4.1 Compliance With Regulatory Guides

5.3.1.4.1.1 Regulatory Guide 1.31, Control of Stainless Steel Welding

Controls on stainless steel welding are discussed in 5.2.3.4.2.1.

5.3.1.4.1.2 Regulatory Guide 1.34, Control of Electroslag Weld Properties

Electroslag welding was not employed for the reactor pressure vessel fabrication.

5.3.1.4.1.3 Regulatory Guide 1.43, Control of Stainless Steel Weld Cladding of Low-Alloy Steel Components

Reactor pressure vessel specifications require that all low alloy steel be produced to fine grain practice. The requirements of this regulatory guide are not applicable to BWR vessels.

5.3.1.4.1.4 Regulatory Guide 1.44, Control of the Use of Sensitized Stainless Steel

Controls to avoid severe sensitization are discussed in 5.2.3.4.1.1.

5.3.1.4.1.5 Regulatory Guide 1.50, Control of Preheat Temperature for Welding Low-Alloy Steel

Preheat controls are discussed in 5.2.3.3.2.1.

5.3.1.4.1.6 Regulatory Guide 1.71, Welder Qualification for Areas or Limited Accessibility

Qualification for areas of limited accessibility is discussed in 5.2.3.4.2.3.

5.3.1.4.1.7 Regulatory Guide 1.99, Revision 2, Radiation Embrittlement of Reactor Vessel Materials

Predictions for changes in transition temperature and upper shelf energy were made in accordance with the requirements of Regulatory Guide 1.99, Revision 2.

5.3.1.5 Fracture Toughness

5.3.1.5.1 Compliance with 10 CFR 50 Appendix G

Appendix G of 10 CFR 50 is interpreted for Class I RCPB components of the BWR 6 reactor design and complied with as discussed in 5.3.2 and below with the following clarifications:

Clarification -

A minimum boltup and pressurization temperature of 70°F was imposed by GE, which is at least 60°F above the flange region RT_{NDT}. This exceeds the minimum RT_{NDT} temperature required by the ASME Code Section III, Paragraph G-2222(C). Summer 1976 and later editions. The 60°F margin is included because the acceptable postulated flaw depths at the main closure flange to shell or head outside surfaces are 0.24". Tests were made which shows that flaws of that depth can be detected by the ultrasonic testing or surface penetrant examination; however, the additional 60°F margin has been included for additional assurance of adequacy.

Clinton complies with the intent of Appendix G, 10 CFR 50, paragraphs III.B.4 and III.B.5.a, b, c, and d. The two letters in Attachment A5.3, show that certified material test reports complying with ASME Boiler and Pressure Vessel Code, Section III, document equivalent requirements to the referenced paragraphs of Appendix G, and that this position is acceptable to the NRC.

a. Letter A: General Electric Letter No. 780-286-77 from Glenn G. Sherwood to Edson G. Case, October 17, 1977.

b. Letter B: Nuclear Regulatory Commission Letter MFN-073-78 from Robert B. Minogue to Glenn S. Sherwood, February 14, 1978.

(Q&R 251.2)

In the seventh refueling outage, reactor vessel pressure/temperature limits were developed based on ASME Section XI, Appendix G as modified by ASME Code Cases N-588, “Alternative to Reference Flaw Orientation of Appendix G for Circumferential Welds in Reactor Vessels” approved December 12, 1997 and N-640, Alternative Reference Temperature Fracture Toughness for Development of P-T Limits Curves” approved February 26, 1999.

5.3.1.5.1.1 Method of Compliance

The following items A through G are the interpretations and methods used to comply with Appendix G of 10 CFR 50. Item H reports the fracture toughness test results and the background information used as the basis to shown compliance with 10 CFR 50, Appendix G.

A) Records and Procedures for Impact Testing

Personnel conducting fracture toughness tests were qualified to written impact testing procedures that demonstrated competency to perform required tests. For the Clinton reactor pressure vessels, records were not sufficient to document full compliance to current ASME code requirements; however, there are sufficient records to document that the technical requirements are met.

B) Specimen Orientation for Original Qualification Versus Surveillance

The special longitudinally oriented base metal Charpy specimens required by the general reference NB-2300 and, specifically, NB-2322.2(a) (6) for beltline material qualification will not be included in the surveillance program because, with regard to toughness as the limiting factor, the Charpy V-notch energy value is lower for transverse specimens than for longitudinal specimens. ASTM E-185-73 also does not require longitudinal specimens as part of the surveillance program.

C) Charpy-V Curves for the RPV Beltline

The orientation of impact test specimens comply with the requirements of NB-2322(a)4 (transverse specimen) for plate material as opposed to NB-2322(a) (6) (longitudinal specimen). This understanding of the general reference to NB-2322 results in meaningful and conservative beltline curves of unirradiated materials for comparison with the results of surveillance program testing of irradiated transverse base metal specimens and also allows this curve to comply with ASTM E 185-73.

It is understood that the number, type, and locations of specimens necessary for the full curves of Appendix G are those required to comply with Paragraphs 4.3 and 4.4 of ASTM E 185-73. This interpretation is considered necessary to assure that the adjusted reference temperature of irradiated base metal, heat-affected zone and weld metal called for in Appendix H can be based on directly comparable data for the unirradiated reference temperature.

The procedures of ASTM E 185-73 were used for selection of surveillance specimen base material and weld material to provide a conservative adjusted reference temperature for the beltline material. The weld test plate for the surveillance program specimens had the principal working direction normal to the weld seam to assure that heat-affected zone specimens were oriented such that they simulate actual production vertical weld seam conditions.

D) Upper Shelf Energy for Beltline

For the Clinton reactor pressure vessel, all beltline materials comply with the requirement of 75 ft-lbs minimum upper shelf CV energy. In addition, these materials are predicted to have a minimum end-of-life upper shelf energy of at least 50 ft-lbs.

E) Bolting Materials

Closure bolting for the Clinton reactor pressure vessel meets the 45 ft-lb and 25 mils lateral expansion requirements.

F) Alternate Procedures for the Calculation of Stress Intensity Factor

Stress Intensity Factors were calculated by the methods of Appendix "G" to Section III ASME Code. Discontinuity regions were evaluated, as well as shell and head areas, as part of the detailed thermal and stress analysis in the vessel stress report. Equivalent margins of safety to those required for shells and heads were demonstrated using a 1/4T defect at all locations, with the exception of the main closure flange to head and shell discontinuity locations. Here it was found that additional restriction on operating limits would be required for outside surface flaw sizes greater than 0.24 inches at the outside surface of the flange to shell joint. It has been demonstrated using a test mockup of these areas that smaller defects can be detected by the

ultrasonic inservice examinations procedures required at the adjacent weld joint. Since the stress intensity factor is greatest at the surface of the flange to shell and head joints a flaw can also be detected by outside surface examination technique.

G) Fracture Toughness Margins in the Control of Reactivity

Appendix G of the ASME Code, Section III (1971 Edition with Addenda to and including Summer 1973 or later), "Protection Against Nonductile Failure," was used in determining pressure/temperature limitations for all phases of plant operation. Additionally, when the core is critical, a 40°F temperature allowance is included in the reactor vessel operating pressure vs temperature limits to account for operational occurrences in the control of reactivity as described in GE BWR Licensing Topical Report NED0-21778-A and the NRC acceptance basis which is included therein.

H) Results of fracture toughness tests and analyses are reported in Tables 5.3-1, 5.3-2, 5.3-3, and 5.3-4. Table 5.3-1 has test results, initial RT_{NDT}, initial upper shelf energy (USE) for vessel plate, welds, nozzles and appurtenances. Table 5.3-2 has USE results that are adjusted for irradiation effects over the plant life. Table 5.3-3 has unirradiated and irradiated (end-of-life) RT_{NDT} results for limiting materials in vessel shell No. 2 and adjacent girth weld. Table 5.3-4 has unirradiated and irradiated RT_{NDT} results for vessel shell No. 1. In Tables 5.3-3 and 5.3-4, the adjusted reference temperature (ART) is the initial RT_{NDT} that is adjusted for the effects of neutron irradiation of the vessel during reactor operation. Material information from various lots for each heat is combined to create the ART for each heat of material. RT_{NDT} is not adjusted when the estimated fluence is less than 1×10^{17} n/cm^2 (E>1MeV).

5.3.1.6 Material Surveillance

5.3.1.6.1 Compliance with "Reactor Vessel Material Surveillance Program Requirements"

The materials surveillance program monitors changes in the fracture toughness properties of ferritic materials in the reactor vessel beltline region resulting from their exposure to neutron irradiation and thermal environment.

Reactor vessel materials surveillance specimens were provided in accordance with requirements of ASTM E 185-73 and 10 CFR 50 Appendix H. Materials for the program were selected to represent materials used in the reactor beltline region. Specimens were manufactured from a plate actually used in the beltline region and a weld typical of those in the beltline region and thus represent base metal, weld material, and the weld heat affected zone material. The plate and weld were heat treated in a manner which simulates the actual heat treatment performed on the core region shell plates of the completed vessel.

Each in-reactor surveillance capsule contains 36 Charpy-V-Notch specimens. The capsule loading consists of 12 specimens each of base metal, weld metal, and heat affected zone material. A set of out-of-reactor baseline Charpy-V-Notch specimens and archive material was provided with the surveillance test specimens.

In accordance with the requirements of the edition of 10 CFR 50, Appendix H that was current at the time of vessel manufacture, three surveillance capsules were provided since the predicted end of life adjusted reference temperature of the reactor vessel steel, as predicted at the time of design, was less than 100°F.

In 2003, the NRC approved Clinton Power Station's participation in the BWR Vessel and Internals Project (BWRVIP) Integrated Surveillance Program (ISP) as described in BWRVIP-78 and BWRVIP-86 (Reference 4). The NRC approved the ISP for the industry in Reference 4 and approved Clinton Power Station's participation in Reference 5. The ISP meets the requirements of 10 CFR 50 Appendix H and provides several advantages over the original program. The surveillance materials in many plant-specific programs do not represent the best match with the limiting vessel beltline materials since some were established prior to 10 CFR 50 Appendix H requirements. Also, the ISP allows for better comparison to unirradiated material data to determine actual shifts in toughness. Finally, for many plants, ISP data will be available sooner to factor into plant operations since there are more sources of data.

The current withdrawal schedule is based on the latest NRC-approved revision of BWRVIP-86 (Reference 4). Based on this schedule, Clinton Power Station is not scheduled to withdraw any additional material specimens.

5.3.1.6.2 Neutron Flux and Fluence Calculations

A description of the methods of analysis is contained in Subsections 4.1.4.5 and 4.3.3.

The peak fluence at the inside surface of the vessel beltline shell is 6.9×10^{18} n/cm^2 after 32 EFPY of operation. The peak fluence is used for calculating the effect of irradiation on USE. The fluence for the reactor vessel pressure/temperature calculations was conservatively determined by increasing the fluence by 25 percent to account for flux wire measurement uncertainty. Therefore, the beltline plate inside surface peak fluence is 8.7×10^{18} n/cm^2. The girth weld inside surface fluence is 8.1×10^{17} n/cm^2, which is adjusted for the axial flux distribution.

5.3.1.6.3 Predicted Irradiation Effects on Vessel Beltline Materials

The ART for material in or near the beltline that is based on the estimated maximum changes in RT_{NDT} (initial reference temperature) as a function of the end of life (EOL) fluence (i.e., at 32 EFPY) at the 1/4T depth of the vessel beltline materials are listed in Table 5.3-3. In this instance, beltline refers to shell material that directly surrounds the effective height of the active core region. The predicted peak EOL fluence at the 1/4T depth of the vessel beltline for plate and vertical weld material is 6.2×10^{18} n/cm^2 and for girth weld material adjacent to the beltline is 5.8×10^{17} n/cm^2. Fluence at the 1/4T depth is calculated from the inside surface fluence according to Regulatory Guide 1.99, Revision 2 methods. Similarly, Table 5.3-4 presents ART that is based on the estimated EOL RT_{NDT} information for shell no.1 plate materials and vertical seam weld materials that will be exposed to an EOL fluence in excess of 1×10^{17} n/cm^2 (E > I MeV). Transition temperature changes and changes in upper shelf energy were calculated in accordance with the rules of Regulatory Guide 1.99, Revision 2. Reference temperature was established in accordance with 10 CFR 50 Appendix G and NB 2330 of the ASME Code.

5.3.1.6.4 Positioning of Surveillance Capsules and Method of Attachment

Surveillance specimen capsules are located at three azimuths at a common elevation in the core beltline region. The sealed capsules are not attached to the vessel but are in welded capsule holders. The capsule holders are mechanically retained by capsule holder brackets welded to the vessel cladding as shown in Drawing 767E956. The surveillance brackets are welded to weld buildup pads, and therefore, are not attached to the pressure boundary directly. The capsule holder brackets allow the removal and reinsertion of capsule holders. These

brackets are designed, fabricated, and analyzed to the requirements of Section III ASME Code. The bracket welding is performed in accordance with Section IX and Section III of the ASME Code. A positive spring loaded locking device is provided to retain the capsules in position throughout any anticipated event during the lifetime of the vessel.

In areas where brackets, such as the surveillance specimen holder brackets, are located, additional nondestructive examinations are performed on the vessel base metal and stainless steel weld deposited cladding or weld buildup pads during vessel manufacture. The base metal is ultrasonically examined by straight beam techniques to a depth at least equal to the thickness of the bracket being joined. The area examined is the area of the subsequent attachment weld plus a band around this area of width equal to at least half the thickness of the part joined. The required stainless steel weld deposited cladding is similarly examined. The full penetration welds are liquid penetrant examined to ASME Section III Standards. Cladding thickness is required to be at least 1/8 inch.

The above requirements have been successfully applied to a variety of bracket designs which are attached to weld deposited stainless steel cladding or weld buildups in many operating BWR reactor pressure vessels.

Inservice inspection examinations of core beltline pressure retaining welds are performed from the outside surface of the reactor pressure vessel. If a bracket for mechanically retaining surveillance specimen capsule holders were located at or adjacent to a vessel shell weld, it would not interfere with the straight beam or half node angle beam inservice inspection ultrasonic examinations performed from the outside surface of the vessel.

The lead factor is defined as the ratio of the flux at the surveillance sample to the flux at the peak location of interest in the vessel. The surveillance samples in the vessel are located at 3°, 177°, and 183°. By symmetry, the samples are located at equivalent positions and are, therefore, expected to have the same lead factor with respect to the vessel.

LEAD FACTORS

At vessel surface = 0.94

(Q&R 251.4)

5.3.1.6.5 Time and Number of Dosimetry Measurements

GE provided a separate neutron dosimeter so that fluence measurements could be made at the vessel ID after the first fuel cycle to verify the predicted fluence at an early date in plant operation. This measurement was made in 1989, with a measured flux that was somewhat lower than the calculated design value. Dosimeter flux wires are also included in the surveillance capsules, so that fluence may be further calibrated after several cycles of normal operation. Thus, there is no need for additional separate dosimetry. It is possible however to install a new dosimeter, if required, during succeeding fuel cycles.

5.3.1.7 Reactor Vessel Fasteners

The reactor vessel closure head (flange) is fastened to the reactor vessel shell flange by multiple sets of threaded studs and nuts. The lower end of each stud is installed in a threaded hole in the vessel shell flange. A nut and washer are installed on the upper end of each stud.

The proper amount of preload can be applied to the studs by a sequential tensioning using hydraulic tensioners. The design and analysis of this area of the vessel is in full compliance with all Section III Class I Code Requirements. The materials for studs, nuts and washers is SA-540 Grade B23 or B24 at the 130,000 psi specified minimum yield strengths level.

Hardness tests are preformed on all main closure bolting to demonstrate that heat treatment has been properly performed. A minimum of 45 foot pounds Charpy V-Notch, C_v energy and 25 mils lateral expansion is required at 70°F. The maximum reported ultimate tensile strength was below the 170,000 psi maximum specified in Regulatory Guide 1.65. Also, the Charpy impact test requirements of ASME Code NB-2300 were satisfied, as the lowest reported C_v energy was 49 ft-lbs at +10°F, compared to the requirement of 45 ft-lbs at 70°F, and the lowest reported C_v expansion was 27 mils, compared to the 25 mils required. Studs, nuts, and washers are ultrasonically examined in accordance with Section III NB-2585 and the following additional requirements:

(1) Examination was performed after heat treatment and prior to machining threads.

(2) Straight beam examination was performed on 100% of each stud. Reference standard for the radial scan was a 1/2 inch diameter flat bottom hole having a depth equal to 10% of the material thickness. For the end scan the standard of NB-2585 was used.

(3) Nuts and washers were examined by angle beam from the outside circumference per ASME-SA-388 in both the axial and circumferential directions.

The surface examinations of NB-2583 were applied after heat treatment and threading.

There are no metal platings applied to closure studs, nuts, or washers. A phosphate coating was applied to threaded areas of studs and nuts and bearing areas of studs, nuts, and washers to act as a rust inhibitor and to assist in retaining lubricant on these surfaces.

A. Regulatory Guide 1.65
General Compliance or Alternate Approach Assessment: For commitment, revision number, and scope, see the Regulatory Guide 1.65 Project Position in Section 1.8.

Regulatory Guide 1.65 defines acceptable materials and testing procedures with regard to reactor vessel closure stud bolting for light-water-cooled reactors.

The reactor pressure vessel closure studs are SA540 Grade B23 or 24 (AISI4340) and have a maximum ultimate tensile strength of 170 ksi. Additionally, GE specified the bolting material must have Charpy V notch impact properties of 45 ft-lbs minimum with 25 mils lateral expansion. Nondestructive examination before and after threading is specified to be in accordance with subarticle NB-2580 ASME Section III, which complies with regulatory position C. 2. Subsequent to fabrication, the studs are manganese phosphate coated and are lubricated with a graphite/alcohol or a nickel powder base lubricant.

In relationship to regulatory position C.2.b, the bolting materials were ultrasonically examined after final heat treatment and prior to threading, as specified. The specified requirement for examination according to SA-388 was complied with. The procedures approved for use in practice were judged to ensure comparable material quality and, moreover, were considered adequate on the basis of compliance with the applicable requirements of ASME Code

Paragraph NB 2583. Additionally, straight beam examination was performed on 100% of cylindrical surfaces and from both ends of each stud using a 3/4 maximum diameter transducer. In addition to the code-required notch, the reference standard for the radial scan contained a 1/2-inch diameter flat bottom hole with a depth of 10% of the thickness, and the end scan standard contained a 1/4-inch diameter flat bottom hole 1/2 inch deep. Also, angle beam examination was performed on the outer cylindrical surface in both a flat and circumferential direction. Surface examinations were performed on the studs and nuts after final heat treatment and threading, as specified in the guide, in accordance with NB 2583 of the applicable ASME Code.

Radial scan calibration is based on a 1/2-inch (12.7 mm) diameter flat bottom hole of a depth equal to 10% of the material thickness. Angle beam examination is performed on the outer cylindrical surface of nuts and washer per ASME SA-388 in both axial and circumferential directions. Any indication greater than the indication from the applicable calibration feature is unaccepf. A distance-amplitude correction curve per NB 2585 is used for the longitudinal wave examination.

In relation to regulatory position C.3, General Electric practice allows exposure of stud bolting surfaces to high purity fill water; nuts and washers are dry-stored during refueling.

5.3.2 Pressure-Temperature Limits

5.3.2.1 Limit Curves

The limit curves presented in CPS Technical Specification (TS) Figures 3.4.11-1, 3.4.11-2, and 3.4.11-3 are based on 10 CFR 50, Appendix G, July 1983, ASME Section XI code cases N-588 and N-640, and General Electric GE-NE-B13-02084-00-01, Revision 0.

RT_{NDT} values and temperature limits are given in this section for limiting locations in the reactor vessel. All the vessel shell and head areas remote from discontinuities plus the feedwater nozzles were evaluated, and the operating limit curves are based on the limiting location. The boltup limits for the flange and adjacent shell region are based on a minimum metal temperature of RT_{NDT} +60°F. The maximum through-wall temperature gradient from continuous heating or cooling at 100°F per hour was considered.

5.3.2.1.1 Temperature Limits for Boltup

A minimum temperature of 10°F is required for the closure studs. A sufficient number of studs (up to 10%) may be tensioned at <70°F to seal the closure flange o-rings for the purpose of raising reactor water level above the closure flanges in order to assist in warming them. The flanges and adjacent shell are required to be warmed to minimum temperatures of 70°F before they are stressed by the full intended bolt preload. The fully preloaded boltup limits are reflected in Technical Specification Figures 3.4.11-1 and 3.4.11-2.

5.3.2.1.2 Temperature Limits for ISI Hydrostatic or Leak Pressure Tests

The fracture toughness analysis for system pressure tests resulted in curve A shown in TS Figure 3.4.11-1. The curve labeled “Upper Vessel and Beltline Limits” is a composite curve based on RT_{NDT} values for weld material, plate material, nozzle material, and vessel appurtenances material in the upper vessel and beltline.

The fracture toughness analysis for vessel materials in the bottom head using a heatup and cool down rate at 20°F/hr, is the basis for the bottom head curve in TS Figure 3.4.11-1.

5.3.2.1.3 Operating Limits During Heatup, Cooldown and Core Operation

The fracture toughness analysis was done for the normal heatup or cooldown rate of 100°F/hour. The temperature gradients and thermal stress effects corresponding to this rate were included. The results of the analyses are a set of operating limits for non nuclear heatup or cooldown shown as curve B in TS Figure 3.4.11-2. Curve C in TS Figure 3.4.11-3 applies whenever the core is critical.

5.3.2.1.4 Reactor Vessel Annealing

In-place annealing of the reactor vessel because of radiation embrittlement is unnecessary because the predicted value in transition of adjusted reference temperature will not exceed 200°F.

5.3.2.1.5 Predicted Shift in RT_{NDT}

For design purposes, the ART for BWR vessels is predicted using the procedures in Regulatory Guide 1.99, Revision 2.

5.3.2.2 Operating Procedures

By comparison of the pressure vs. temperature limit in Section 5.3.2.1 with intended normal operating procedures for the most severe upset transient, it is shown that these limits will not be exceeded during any foreseeable upset condition. Reactor operating procedures have been established such that actual transients will not be more severe than those for which the vessel design adequacy has been demonstrated. Of the design transients, the upset condition producing the most adverse temperature and pressure anywhere in the vessel head and/or shell areas occurs in the bottom head, yielding a minimum fluid temperature of 250°F and a maximum pressure peak of 1180 psig. Scram automatically occurs as a result of this event, prior to the reduction in bottom head fluid temperature, so the applicable operating limits are given by the non-nuclear heating limits for the vessel discontinuities (TS Figure 3.4.11-2). For a temperature of 250°F, the maximum allowable pressure exceeds 1600 psig for the intended margin against nonductile failure. The maximum transient pressure of 1180 psig is therefore within the specified allowable limits.

5.3.3 Reactor Vessel Integrity

The reactor vessel was fabricated for General Electric's Nuclear Energy Division by CBI Nuclear Co., and was subject to the requirements of General Electric's Quality Assurance program.

CBI Nuclear Co. was formed in 1972 through a merger agreement reached by Chicago Bridge and Iron Co. and General Electric Co. Since that time, it has been the primary supplier of domestic reactor vessels for BWR plants, and has also supplied vessels for export. Prior to the merger, and since 1966, Chicago, Bridge and Iron Co. was a major reactor vessel supplier to GE.

Assurance was made that measures were established requiring that purchased material, equipment, and services associated with the reactor vessels and appurtenances conform to the

requirements of the subject purchase documents. These measures included provisions, as appropriate, for source evaluation and selection, objective evidence of quality furnished, inspection at the vendor source and examination of the completed reactor vessels.

General Electric provided inspection surveillance of the reactor vessel fabricator's in process manufacturing, fabrication, and testing operations in accordance with GE's Quality Assurance Program and approved inspection procedures. The reactor vessel fabricator was responsible for the first level inspection of his manufacturing, fabrication, and testing activities and General Electric is responsible for the first level of audit and surveillance inspection.

Adequate documentary evidence that the reactor vessel material, manufacture, testing, and inspection conforms to the specified quality assurance requirements contained in the procurement specification is available at the fabricator's facilities.

A. Regulatory Guide 1.2
General Compliance
For commitment, revision number, and scope see Section 1.8.

This Regulatory Guide states that a suitable program be followed to assure the reactor pressure vessel will behave in a non-brittle manner under loss-of-coolant accident (LOCA) conditions. Should it be considered that the margin of safety against reactor pressure vessel brittle fracture due to emergency core cooling system operation at any time during vessel life is unacceptable, the Regulatory Guide states that an engineering solution, such as annealing, could be applied to assure adequate recovery of the fracture toughness properties of the vessel material.

An analysis of the structural integrity of boiling water reactor pressure vessels during a design basis accident (DBA) has been performed. The analysis included:

1. Description of the LOCA event.

2. Thermal analysis of the vessel wall to determine the temperature distribution at different times during the LOCA.

3. Determination of the stresses in the vessel wall including thermal, pressure, and residual stresses.

4. Consideration of radiation effect on material toughness (NDTT shift and changes in toughness).

5. Fracture mechanics evaluation of vessel wall for different postulated flaw sizes.

This analysis incorporated conservative assumptions in all areas (particularly in the areas of heat transfer, stress analysis, effects of radiation on material toughness, and crack tip stress intensity factor evaluation). The analysis concluded that even in the presence of large flaws, the vessel will have considerable margin against brittle fracture following a LOCA.

The criteria of 10CFR50 Appendix G are interpreted as establishing the requirements for annealing. Paragraph IV C of Appendix G, requires the vessels to be designed for annealing of the beltline only where the predicted value of adjusted RT_{NDT} exceeds 200°F as defined in paragraph NB2331 of the ASME Section III code. This predicted value is not exceeded, therefore design for annealing is not required.

For further discussion of fracture toughness of the reactor pressure vessel refer to Subsection 5.3.1.5.

5.3.3.1 Design

5.3.3.1.1 Description

5.3.3.1.1.1 Reactor Vessel

The reactor vessel shown in Figure 5.3-1 is a vertical, cylindrical pressure vessel of welded construction. The vessel is designed, fabricated, tested, inspected, and stamped in accordance with the ASME Code Section III, Class 1 requirements including the addenda in effect at the date of order placement, Unit I: 9/14/1973 and Unit 2: 9/14/1973. Design of the reactor vessel and its support system meets Seismic Category I equipment requirements. The materials used in the reactor pressure vessel are shown in Table 5.2-4.

The cylindrical shell and top and bottom heads of the reactor vessel are fabricated of low alloy steel, the interior of which is clad with stainless steel weld overlay, except for the top head and nozzle and nozzle weld zones.

In-place annealing of the reactor vessel is unnecessary because shifts in transition temperature caused by irradiation during the 40-year life can be accommodated by raising the minimum pressurization temperature and the predicted value of adjusted reference temperature does not exceed 200°F. Radiation embrittlement is not a problem outside of the vessel beltline region because of the low fluence in those areas.

Quality control methods used during the fabrication and assembly of the reactor vessel and appurtenances assure that design specifications are met.

The vessel top head is secured to the reactor vessel by studs and nuts. These nuts are tightened with a stud tensioner. The vessel flanges are sealed with two concentric metal seal-rings designed to permit no detectable leakage through the inner or outer seal at any operating condition, including heating to operating pressure and temperature at a maximum rate of 100°F/hr in any one hour period. To detect seal failure, a vent tap is located between the two seal-rings. A monitor line is attached to the tap to provide an indication of leakage from the inner seal-ring seal.

5.3.3.1.1.2 Shroud Support

The shroud support is a circular plate welded to the vessel wall and to a cylinder supported by vertical stilt legs from the bottom head. This support is designed to carry the weight of peripheral fuel elements, neutron sources, core plate, top guide, steam separators, and jet pump diffusers, and to laterally support the fuel assemblies. Design of the shroud support also accounts for pressure differentials across the shroud support plate, for the restraining effect of components attached to the support, and for earthquake loadings. The shroud support design is specified to meet appropriate ASME code stress limits.

5.3.3.1.1.3 Protection of Closure Studs

The Boiling Water Reactor does not use borated water for reactivity control during normal operation. This subsection is therefore not applicable.

5.3.3.1.2 Safety Design Basis

The design of the reactor vessel and appurtenances meets the following safety design bases:

(1) The reactor vessel and appurtenances will withstand adverse combinations of loading and forces resulting from operation under abnormal and accident conditions.

(2) To minimize the possibility of brittle fracture of the nuclear system process barrier, the following are required:

a. Impact properties at temperatures related to vessel operation have been specified for materials used in the reactor vessel.

b. Expected shifts in transition temperature during design life as a result of environmental conditions, such as neutron flux, are considered in the design. Operational limitations assure that NDT temperature shifts are accounted for in reactor operation.

c. Operational margins to be observed with regard to the transition temperature are specified for each mode of operation.

5.3.3.1.3 Power Generation Design Basis

The design of the reactor vessel and appurtenances meets the following power generation design bases:

(1) The reactor vessel has been designed for a useful life of 40 years.

(2) External and internal supports that are integral parts of the reactor vessel are located and designed so that stresses in the vessel and supports that result from reactions at these supports are within ASME Code limits.

(3) Design of the reactor vessel and appurtenances allows for a suitable program of inspection and surveillance.

5.3.3.1.4 Reactor Vessel Design Data

The reactor vessel design pressure is 1250 psig and the design temperature is 575°F. The maximum installed test pressure is 1563 psig.

5.3.3.1.4.1 Vessel Supports

The vessel supports are discussed in Subsection 3.8.3.

5.3.3.1.4.2 Control Rod Drive Housings

The control rod drive housings are inserted through the control rod drive penetrations in the reactor vessel bottom head and are welded to the reactor vessel. Each housing transmits loads to the bottom head of the reactor. These loads include the weights of a control rod, a control rod drive, a control rod guide tube, a four-lobed fuel support piece, and the four fuel assemblies

that rest on the fuel support piece. The housings are fabricated of Type 304 austenitic stainless steel, and Inconel 600.

5.3.3.1.4.3 In-Core Neutron Flux Monitor Housings

Each in-core neutron flux monitor housing is inserted through the in-core penetrations in the bottom head and is welded to the inner surface of the bottom head.

An in-core flux monitor guide tube is welded to the top of each housing and either a source range monitor/intermediate range monitor (SRM/IRM) drive unit or a local power range monitor (LPRM) is bolted to the seal/ring flange at the bottom of the housing (Section 7.6).

5.3.3.1.4.4 Reactor Vessel Insulation

The reactor vessel insulation consists of all metal reflective type sections designed for a nominal heat transfer rate of 60 Btu/hr/ft^2 for the reactor vessel top head and 65 Btu/hr/ft^2 for the reactor vessel sides. The insulation sections are designed to remain in place and resist permanent damage during a seismic event.

The shell insulation is supported from the inside surface of the shield wall through a network of structural steel in such a manner as to maintain a 3-inch annular air gap which will be used as a ventilation plenum. The structural steel is bolted or welded together and to the shelf wall as required. Where the bolting technique is used the bolt, heads and nuts are staked or tack welded to the structural steel framework. The insulation is designed to maintain an ambient air temperature of 150°F at the top of the plenum (located at the top of the shield wall) based on an ambient air temperature of 118°F at the bottom of the plenum (located at the bottom of the shield wall) with an entering air flow of 4000 scfm. The insulation is designed to be removable over those portions of the vessel where inspection is required by CPS Inservice Inspection Program.

The reactor top head insulation is supported on a removable support steel framework. During refueling, the support and the top head insulation are removed. The design of the top head insulation has been analyzed to seismic design.

5.3.3.1.4.5 Reactor Vessel Nozzles

All piping connected to the reactor vessel nozzles has been designed so as not to exceed the allowable loads on any nozzle.

The vessel top head nozzle is provided with a flange with large groove facing. The drain nozzle is of the full penetration weld design. The recirculation inlet nozzles (located as shown in Figure 5.3-1), feedwater inlet nozzles, core spray inlet nozzles, and the LPCI nozzles all have thermal sleeves. Nozzles connecting to stainless steel piping have save ends, or extensions made of stainless steel. These safe ends or extensions were welded to the nozzles after the pressure vessel was heat treated to avoid furnace sensitization of the stainless steel. The material used is compatible with the material of the mating pipe.

The nozzle for the standby liquid control pipe is designed to minimize thermal shock effects on the reactor vessel, in the event that use of the standby liquid control system is required.

The solution of the feedwater nozzle cracking problem involves several elements, including nozzle cladding removal and thermal sleeve redesign. A description of these design changes and appropriate analysis are presented in Reference 2.

CPS complies with NUREG 0619 as described below (Q&R 252.2).

A. Feedwater Spargers:

CPS has the improved triple-sleeve, double-seal, interference-fit spargers and no cladding on the feedwater nozzle (See MEB (DSER) Item Numbers 91 and 92). Inspection of the nozzles and/or leak testing of the seals is included in the inservice inspection program. Operating procedures will minimize practices that would aggravate cracking. The CPS feedwater control system meets the requirements of NUREG 0619 article 3.3.2.1 of controllability from 0.5% to 10% of rated flow. NRC Generic letter 81-11 makes an additional requirement that a plant-specific fracture analysis be performed using feedwater flows; temperature, and other assumed stresses or that the feedwater control system meet all the six criteria of NEDE-21821-A. These criteria and CPS compliance are as follows:

a. Confirm, modify, or suitably install a low-flow feedwater control system. It should be controllable from 10% to 0.5% of rated feedwater flow under either automatic or manual modes. It is to be operated during all startup, standby, and shutdown periods when feedwater demand is <10%.

CPS Compliance: CPS meets this criteria.

b. For effective control, the system must operate around a main feedwater line valve that has a positive shutoff capability. This control capability must be achievable with any feedpump operable in this range.

CPS Compliance: CPS meets the intent of this criteria but with different piping arrangements.

c. The low flow controller shall be operable with the top feedwater heaters either in service or bypassed and shall provide capability for a constant minimum feedwater flow of 0.5% of rated. Vessel water level control at very low powers (<1%) may require discharge from the vessel to the main condenser via the reactor water cleanup system.

CPS Compliance: CPS meets this criteria.

d. Reliability shall be provided through necessary redundancy, testing, and/or component reliability such that low flow control capability shall be available >95% of the time when feedwater flow demand is less than 5% of rated.

CPS Compliance: CPS meets this criteria through redundancy.

e. The transfer between the low flow control and the main feedwater control shall be bumpless. An interlock shall prevent main feedwater control valve regulation when the low flow control system is in use, where applicable.

CPS Compliance: Not directly applicable. The turbine-driven, feedpump low flow regulator valves and the flushing-line bypass valves are manually controlled. There is bumpless transfer on turbine-driven pump speed control and motor-driven reactor feedpump control valve between manual and auto.

f. The controller shall be capable of maintaining the feedwater flow rate within the allowable peak to peak variation tabulated below for stated conditions of steady low feedwater flow demand. Percentages are of rated feedwater flow.

RWCU Flow (%)	Steady FW Flow Demand (%)	Maximum Peak to Peak FW Flow Variation (%)
1	<1%	0.20
	3%	0.70
	5%	1.00
2	<1%	0.25
	3%	0.55
	5%	0.80
3	<1%	0.30
	3%	0.45
	5%	0.70

CPS Compliance: These criteria are not strictly met. However, a plant specific fracture mechanics analysis, as allowed by NRC Generic Letter 81-11 in lieu of these criteria, demonstrates that a postulated existing crack would not grow to greater than one inch during the forty year life of the plant.

B. CRD return nozzle:

The CPS RPV CRD return nozzle has been capped without rerouting of return flow. CPS has installed equalizing valves and rerouted the flow stabilizer loop to the cooling water header with stainless steel piping as specified in article 8.1 (4) of NUREG 0619. CPS does not have carbon steel exhaust header piping. Refer to Subsection 4.6.2.3.2.2.2 (See MEB (DSER) Item Number 91 and the response to Question 410.5)

5.3.3.1.4.6 Materials and Inspections

The reactor vessel was designed and fabricated in accordance with the appropriate ASME Boiler and Pressure Vessel Code as defined in subsection 5.2.1. Table 5.2-4 defines the materials and specifications. Subsection 5.3.1.6 defines the compliance with reactor vessel material surveillance program requirements.

5.3.3.1.4.7 Reactor Vessel Schematic (BWR)

The reactor vessel schematic is contained in Figure 5.3-1. Trip system water levels are indicated as shown in Figure 5.3-2.

5.3.3.2 Materials of Construction

All materials used in the construction of the reactor pressure vessel conform to the requirements of ASME Code Section II materials. The vessel heads, shells, flanges, and nozzles are fabricated from low alloy steel plate and forgings purchased in accordance with ASME specifications SA533 Grade B Class 1 and SA508 Class 2. Special requirements for the low alloy steel plate and forgings are discussed in 5.3.1.2. Cladding employed on the interior surfaces of the vessel consists of austenitic stainless steel weld overlay.

These materials of construction were selected because they provide adequate strength, fracture toughness, fabricability, and compatibility with the BWR environment. Their suitability has been demonstrated by long term successful operating experience in reactor service.

5.3.3.3 Fabrication Methods

The reactor pressure vessel is a vertical cylindrical pressure vessel of welded construction fabricated in accordance with ASME Code, Section III Class I requirements. All fabrication of the reactor pressure vessel was performed in accordance with GE approved drawings, fabrication procedures, and test procedures. The shell and vessel head were made from formed low alloy steel plates, and the flanges and nozzles from low alloy steel forgings. Welding performed to join these vessel components was in accordance with procedures qualified per ASME Section III and IX requirements. Weld test samples were required for each procedure for major vessel full penetration welds.

Submerged arc and manual stick electrode welding processes were employed. Electroslag welding was not permitted. Preheat and interpass temperatures employed for welding of low alloy steel met or exceeded the requirements of ASME Section III, subsection NA. Post weld heat treatment of 1100°F minimum was applied to all low alloy steel welds.

All previous BWR pressure vessels have employed similar fabrication methods. These vessels have operated for periods up to 16 years and their service history is excellent.

The vessel fabricator, CBI Nuclear Co., has had extensive experience with G.E. Co. reactor vessels and has been the primary supplier for G.E. domestic reactor vessels and some foreign vessels since the company was formed in 1972 from a merger agreement between Chicago Bridge and Iron Co. and General Electric Co. Prior experience by the Chicago Bridge and Iron Co. with G.E. Co. reactor vessels dates back to 1966.

5.3.3.4 Inspection Requirements

All pressure retaining plate, forgings, and main closure bolting were 100% ultrasonically tested and surface examined by magnetic particle methods or liquid penetrant methods in accordance with ASME Section III requirements. Welds on the reactor pressure vessel were examined in accordance with methods prescribed and meet the acceptance requirements specified by ASME Section III. In addition, the pressure retaining welds were ultrasonically examined using acceptance standards which are required by ASME Section XI.

5.3.3.5 Shipment and Installation

Fabrication of the Clinton reactor vessel was performed at the Clinton site. Suitable measures were taken during installation to assure that vessel integrity was maintained; for example,

access controls were applied to personnel entering the vessel, weather protection was provided and periodic cleanings were performed.

5.3.3.6 Operating Conditions

Procedural controls on plant operation are implemented to hold thermal stresses within acceptable ranges. These restrictions on coolant temperature are:

(1) The average rate of change of reactor coolant temperature during normal heatup and cooldown shall not exceed 100°F during any one-hour period.

(2) If the coolant temperature difference between the dome (inferred from P(sat)) and the bottom head drain exceeds 100°F, neither reactor power level nor recirculation pump flow shall be increased.

(3) The pump in an idle reactor recirculation loop shall not be started unless the coolant temperature in that loop is within 50°F of average reactor coolant temperature.

The limit regarding the normal rate of heatup and cooldown (Item 1) assures that the vessel closure, closure studs, vessel support skirt, and control rod drive housing and stub tube stresses and usaqe remain within acceptable limits. The limit regarding a vessel temperature limit on recirculating pump operation and power level increase restriction (Item 2) augments the Item 1 limit in further detail by assuring that the vessel bottom head region will not be warmed at an excessive rate caused by rapid sweep out of cold coolant in the vessel lower head region by recirculating pump operation or natural circulation (cold coolant can accumulate as a result of control drive inleakage and/or low recirculation flow rate during startup or hot standby). The Item 3 limit further restricts operation of the recirculating pumps to avoid high thermal stress effects in the pumps and piping, while also minimizing thermal stresses on the vessel nozzles.

The above operational limits when maintained insure that the stress limits within the reactor vessel and its components are within the thermal limits to which the vessel was designed for normal operating conditions. To maintain the integrity of the vessel in the event that these operational limits are exceeded the reactor vessel has also been designed to withstand a limited number of transients caused by operator error. Also, for abnormal operating conditions where safety systems or controls provide an automatic temperature and pressure response in the reactor vessel, the reactor vessel integrity is maintained since the severest anticipated transients have been included in the design conditions. Therefore, it is concluded that the vessel integrity will be maintained during the most severe postulated transients, since all such transients are evaluated in the design of the reactor vessel. The postulated transient for which the vessel has been designed is shown on Figure 5.2-5 and discussed in Section 5.2.2.

5.3.3.7 Inservice Surveillance

Inservice inspection of the pressure vessel will be performed in accordance with the requirements of Section XI of the ASME Boiler and Pressure and Vessel Code as described in Subsection 5.2.4.

The materials surveillance program will monitor changes in the fracture toughness properties of ferritic materials in the belt line region resulting from their exposure to neutron irradiation and

thermal environment. Operating procedures will accommodate or be changed to reflect the test results to assure adequate brittle fracture control.

Materials surveillance and inservice inspection programs are in accordance with the applicable requirements of 10 CFR 50, including Appendices G and H, and ASME Code requirements, and provide assurance that brittle fracture control and pressure vessel integrity will be maintained throughout the service lifetime of the reactor pressure vessel.

5.3.4 References

(1) Deleted.

(2) Watanabe, H., "Boiling Water Reactor Feedwater Nozzle/Sparger Final Report", NEDE-21821-A (proprietary version), February 1980.

(3) Branlund, B.J., and Frew, B.D., “Pressure-Temperature Curves for AmerGen, Clinton Power Station Using the KIC Methodology,” GE-NE-B13-02084-00-01, Rev. 0 (Proprietary Version), August 2000.

(4) BWRVIP-86-A: “BWR Vessel and Internals Project, Updated BWR Integrated Surveillance Program (ISP),” Final Report, October 2002

(5) NRC letter from D.V. Pickett approving Amendment 157 to Clinton Facility Operating License No. NPF-62, dated 8-12-03.

TABLE 5.3-1

CHARPY TEST RESULTS

Sheet 1 of 4

I. Vessel Beltline Material Identification

A. Number 2 Shell Ring

Plates	PC.22-1	Heat C4363-2
	PC.22-3	Heat C4380-2
	PC.22-4	Heat C4320-2

B. Welds in Number 2 Shell Ring Vertical Seams

Seam BE
Seam BF
Seam BG

Records for weld filler metal do not identify material used for specific weld seams. All weld filler materials employed on the vessel were qualified for use in the beltline region. Therefore, all weld filler materials used in the Clinton 1 vessel are listed and the limiting weld material was assumed to be in the beltline region. This procedure ensures that the worst case condition is evaluated for the beltline welds.

II. Chemical Analysis for Beltline Material

A. Beltline Material – Chemical Analysis (wt. percent)

	Plates	C	Mn	P	S	Cu	Si	Ni	Mo	Al
Pc.	Ht. C4363-2	0.18	1.30	0.013	0.011	0.06	0.25	0.62	0.55	0.023
Pc.	Ht. C4380-2	0.19	1.30	0.013	0.011	0.07	0.23	0.63	0.56	0.018
Pc.	Ht. C4320-2	0.18	1.30	0.012	0.015	0.05	0.25	0.64	0.53	0.026

B. Welds – Chemical Composition

* - Single Wire ** - Tandem Wire

	C	Mn	Cr	Ni	Si	Mo	Cu	P	S	V	Al
Ht. 3P4955* Lot 0951	0.05	1.30	0.11	0.93	0.43	0.47	0.03	0.014	0.016	0.004	0.013
Ht. 3P4955** Lot 0951	0.10	1.28	0.10	0.89	0.43	0.52	0.03	0.012	0.11	0.008	0.01
Ht. 3P4955* Lot 0342	0.054	1.28	0.08	0.92	0.55	0.54	0.027	0.016	0.010	0.007	0.007
Ht. 3P4955** Lot 0342	0.035	1.33	0.10	0.92	0.56	0.52	0.027	0.016	0.011	0.006	0.006
Ht. 3P4955* Lot 3478	0.046	1.40	0.08	0.97	0.45	0.62	0.02	0.014	0.010	0.007	0.011
Ht. 3P4955** Lot 3478	0.066	1.39	0.08	0.90	0.45	0.56	0.03	0.015	0.010	0.007	0.011
Ht. 5P6756	0.13	1.89	0.08	0.96	0.07	0.48	0.08	0.008	0.012	0.006	0.02
Ht. 494K2351 Lot A404A27AD	0.06	1.24	0.05	1.10	0.34	0.55	0.04	0.020	0.017	0.02	0.001

TABLE 5.3-1

CHARPY TEST RESULTS

Sheet 2 of 4

	C	Mn	Cr	Ni	Si	Mo	Cu	P	S	V	Al
Ht. 422P5621 Lot L414B27AD	0.05	1.25	0.03	1.08	0.45	0.55	0.07	0.015	0.017	0.02	0.01
Ht. 66IN635 Lot G410B27AE	0.05	1.24	0.05	1.02	0.40	0.49	0.03	0.015	0.013	0.02	0.02
Ht. 76492 Lot L430B27AE	0.05	1.23	0.05	1.08	0.48	0.64	0.10	0.016	0.013	0.02	0.01
Ht. 623275 Lot L121A27A	0.041	1.11	--	0.84	0.54	0.50	0.05	0.012	0.020	0.01	--
Ht. 432N1891 Lot G415B27AF	0.06	1.20	0.03	0.99	0.36	0.47	0.02	0.018	0.016	0.02	0.01
Ht. 659N315 Lot F414B27AF	0.05	1.14	0.05	1.00	0.35	0.49	0.04	0.015	0.013	0.02	0.01
Ht. 76616 Lot A506B27AF	0.05	1.16	0.05	0.98	0.37	0.48	0.02	0.012	0.015	0.02	0.01
Ht. 624263 Lot E204A27A	0.051	1.08	0.04	0.89	0.38	0.50	0.06	0.010	0.023	0.02	0.001
Ht. 401S0351 Lot B511B27AG	0.05	1.23	0.03	0.98	0.45	0.54	0.03	0.014	0.017	0.02	0.01
Ht. 431T1831 Lot A626B27AG	0.05	1.25	0.04	0.98	0.51	0.54	0.03	0.013	0.015	0.02	0.01
Ht. 07R458 Lot G418B27AH	0.04	1.14	0.04	0.94	0.35	0.48	0.03	0.015	0.016	0.02	0.01

UNIRRADIATED FRACTURE TOUGHNESS PROPERTIES OF PLATES

Plates Ht. No.	Drop Wt. NDT ºF	Transverse CVN			Reference Temp ºF	Upper Shelf
		Ft.–lbs.	MLE	Temp ºF		Ft.–l
C4363-2 Top Bottom	 -30 -30	 52, 61, 55 64, 80, 62	 42, 49, 45 46, 60, 50	 +30 +30	-30	105
C4380-02 Top Bottom	 -20 -20	 60, 72, 62 54, 73, 72	 48, 58, 46 45, 58, 58	 +40 +40	-20	102
C4320-2 Top Bottom	 -30 -30	 51, 53, 61 63, 63, 84	 44, 51, 45 52, 52, 61	 +40 +30	-20	93

UNIRRADIATED FRACTURE TOUGHNESS PROPERTIES OF WELDS

* - Single Wire ** - Tandem Wire

Weld Metal	Drop Wt. NDT ºF	Transverse CVN			Reference Temp ºF	Upper Shelf
		Ft.–lbs.	MLE	Temp ºF		Ft.–lbs.
Ht. 3P4955* Lot 0951	-50	53, 54, 58	51, 51, 55	+10	-50	93

TABLE 5.3-1

CHARPY TEST RESULTS

Sheet 3 of 4

Weld Metal	Drop Wt. NDT ºF	Transverse CVN			Reference Temp ºF	Upper Shelf Ft.–lbs.
		Ft.–lbs.	MLE	Temp ºF		
Ht. 3P4955** Lot 0951	-60	56, 51, 57	52, 49, 52	0	-60	80
Ht. 3P4955* Lot 0342	-40	51, 52, 56	50, 50, 48	+40	-20	90
Ht. 3P4955** Lot 0342	-20	60, 65, 52	57, 47, 50	+30	-20	95
Ht. 3P4955* Lot 3478	-100	69, 69, 72	69, 62, 64	0	-60	111
Ht. 3P4955** Lot 3478	-80	67, 58, 70	60, 57, 65	0	-60	104
Ht. 5P6756	-60	134, 121, 124	55, 78, 75	0	-60	126
Ht. 494K2351 Lot A404A27AD	-70	62, 72, 81	46, 52, 57	-10	-60	175
Ht. 422P5621 Lot L414B27AD	-80	50, 51, 69	39, 37, 55	0	-70	89
Ht. 66IN635 Lot G410B27AE	-80	51, 66, 70	43, 40, 54	-10	-60	117
Ht. 76492 Lot L430B27AE	-50	50, 51, 52	40, 44, 42	+30	-70	97
Ht. 623275 Lot L121A27A	-70	52, 64, 62	46, 54, 50	-10	-30	102
Ht. 432N1891 Lot G415B27AF	-80	52, 55, 69	45, 44, 48	-10	-70	121
Ht. 659N315 Lot F414B27AF	-80	74, 76, 77	55, 57, 56	-10	-70	136
Ht. 76616 Lot A506B27AF	-70	55, 56, 42	42, 46, 54	-10	-70	126
Ht. 624263 Lot E204A27A	-70	54, 56, 42	64, 50, 37	-10	-70	89
Ht. 401S0351 Lot B511B27AG	-70	66, 86, 103	50, 61, 76	-10	-70	136
Ht. 431T1831 Lot A626B27AG	-60	61, 72, 72	50, 58, 58	+20	-40	109
Ht. 07R458 Lot G418B27AH	-70	69, 75, 90	55, 58, 66	0	-60	122

TABLE 5.3-1

CHARPY TEST RESULTS

Sheet 4 of 4

UNIRRADIATED FRACTURE TOUGHNESS RESULTS

Shell Course	Heat No./ Slab No.	Top/ Bottom ºF	Orientation (L or T)	Charpy Test Temp ºF	Energy Ft.–lbs.	Lateral Expansion (mils)	Percent Sheer
1	A2758-1	-10/-10	T	+50	64, 67, 63/ 62, 62, 50	42, 42, 43/ 48, 52, 50	40, 40, 40/ 50, 50, 50
1	A2740-1	-50/-30	T	+10 +20 +30	58, 49, 52 40, 58, 44 69, 74, 51/ 64, 72, 72	44, 49, 42 48, 38, 37 57, 53, 47/ 54, 56, 56	50, 50, 50 40, 40, 40 50, 50, 50 60, 60, 60

A. Plates

Plate No.	Heat No.	Cu	Ni	ASME NB-2300 Start (Un-irradiated) RT_{NDT}(ºF)
21-1-1	A2758-1	0.10	0.64	-10
21-1-2	A2740-1	0.11	0.66	-30

B. Welds

The analysis of the beltline welds considered all weld materials used in fabrication of the reactor pressure vessel.

TABLE 5.3-2

BELTLINE PLATE & WELD
RT_{NDT} AND USE VALUES

Sheet 1 of 2

(Peak End-of-Life, EOL, fluence = 6.9 X E18 n/cm^2 (e>1 MeV) at vessel ID)

A. Plates

Heat No.	Wt. % Cu	Wt. % Ni	ASME NB-2300 Start RT_{NDT}(ºF)	RG 1.90 Estimated EOL Use (ft–lbs)
C4363-2	0.06	0.62	-30	87
C4380-2***	0.07	0.63	-20	85
C4320-2	0.05	0.64	-20	77

B. Welds

Heat No.	Wt. % Cu	Wt. % Ni	ASME NB-2300 Start RT_{NDT}(ºF)	RG 1.90 Estimated EOL Use (ft–lbs)
Submerged Arc:				
3P4955/ 0951*	0.03	0.93	-50	77
3P4955/ 0951**	0.03	0.89	-60	67
3P4955/ 0342* ***	0.023	0.95	-20	74
3P4955/ 0342** ***	0.025	0.90	-20	79
3P4955/ 3478*	0.02	0.97	-60	92
3P4955/ 3478*	0.03	0.96	-60	86
Flux Cored:				
5P6756	0.08	0.96	-60	98
Shielded Metal Arc				
494K2351/ A404A27AD	0.04	1.10	-70	144
422P5621 L414B27AD	0.07	1.08	-60	69
66IN635 G410B27AE	0.03	1.02	-70	97

TABLE 5.3-2

BELTLINE PLATE & WELD
RT_{NDT} AND USE VALUES

Sheet 2 of 2

(Peak End-of-Life, EOL, fluence = 6.9 X E18 n/cm^2 (e>1 MeV) at vessel ID)

76492 L430B27AE	0.10	1.08	-30	76
623275 L121A27A	0.05	0.84	-70	85
432N1891 G415B27AF	0.02	0.99	-70	100
659N315 F414B27AF	0.04	1.00	-70	112
76616 A506B27AF	0.02	0.98	-70	104
624263 E204A27A	0.06	0.89	-70	69
401S0351 B511B27AG	0.03	0.98	-70	112
431T1831 A626B27AG	0.03	0.98	-40	90
07R458 G418B27AH	0.03	0.94	-60	101

* Single Wire Process
** Tandom Wire Process
*** These materials are also in the reactor vessel surveillance program.

TABLE 5.3-3

BELTLINE AND ADJACENT GIRTH WELD ART RESULTS

Shell #2

Thickness = 5.69 in. Ratio Peak/Location = 1.00 32 EFPY Peak I.D. fluence = 8.7E+18 n/cm^2
32 EFPY Peak 1/4 T fluence = 6.2E+18 n/cm^2

Vertical Weld and Shell #1

Thickness = 5.69 in. Ratio Peak/Location = 1.00 32 EFPY Peak I.D. fluence = 8.1E+17 n/cm^2
32 EFPY Peak 1/4 T fluence = 5.8E+17 n/cm^2

Component	Heat or Heat/Lot	%Cu	%Ni	CF	Initial RT_{NDT} ºF	1/4 T Fluence N/cm^2	32 EFPY ΔRT_{NDT} ºF	σ_I	σ_Δ	Margin ºF	32 EFPY Shift ºF	32 EFPY ART ºF
PLATES: Shell #2												
Mk 22-1	C4363-2	0.06	0.62	37	-30	6.2E+18	32	0	16	32	64	34
Mk 22-3	C4380-2	0.07	0.63	44	-20	6.2E+18	38	0	17	34	72	52
Mk 22-4	C4320-2	0.05	0.64	31	-20	6.2E+18	27	0	13	27	54	34
WELDS: Vertical Weld												
Seam BE, BF, BG	3P4955/ 0342	0.030	0.92	41	-20	6.2E+18	35	0	18	35	71	51
Girth												
Most Limiting	76492/ L430B27AE	0.10	1.08	135	-30	5.8E+17	43	0	21	43	85	55

TABLE 5.3-4

SHELL COURSE NUMBER 1 ART RESULTS

Shell #2

Thickness = 5.69 in. Ratio Peak/Location = 1.00 32 EFPY Peak I.D. fluence = 8.7E+18 n/cm^2
32 EFPY Peak 1/4 T fluence = 6.2E+18 n/cm^2

Vertical Weld and Shell #1

Thickness = 5.69 in. Ratio Peak/Location = 1.00 32 EFPY Peak I.D. fluence = 8.1E+17 n/cm^2
32 EFPY Peak 1/4 T fluence = 5.8E+17 n/cm^2

Component	Heat or Heat/Lot	%Cu	%Ni	CF	Initial RT_{NDT} ºF	1/4 T Fluence N/cm^2	32 EFPY ΔRT_{NDT} ºF	σ_I	σ_Δ	Margin ºF	32 EFPY Shift ºF	32 EFPY ART ºF
PLATES: Shell #2												
Mk 21-1-1	A2758-1	0.10	0.64	65	-10	5.8E+17	21	0	10	21	41	31
Mk 21-1-2	A2740-1	0.11	0.66	75	-30	5.8E+17	24	1	12	24	48	18
WELDS: Vertical Weld												
Seam BA and BB	432N1891/ G415B27AF	0.02	0.99	27	-70	5.8E+17	9	0	4	9	17	-53
	07R458/ G418B27AH	0.03	0.94	41	-60	5.8E+17	13	0	6	13	26	-34
	661N635/ G410B27AE	0.03	1.02	41	-70	5.8E+17	13	0	6	13	26	-44
	494K2351/ A404A27AD	0.04	1.10	54	-70	5.8E+17	17	0	9	17	34	-36
	3P4955/ 0342	0.03	0.92	41	-20	5.8E+17	13	0	6	13	26	6

ATTACHMENT A5.3
ATTACHMENT A TO QUESTION 251.2
Text of Sherwood Letter

ATTACHMENT A (Cont'd)

SUBJECT: INTERPRETATION OF IOCFR50, APPENDIX G, "FRACTURE TOUGHNESS REQUIREMENTS"

The General Electric Company has recently conducted a review of GE functions to ascertain compliance with Paragraph III.B.5 of Appendix G, 10CFR50, "Fracture Toughness Requirements." A determination has been made that Paragraph III.B.5 of 10CFR50, Appendix G, dated 2/20/76, may be subject to interpretation. The scope of this matter relates to all ferrous pressure part components purchased by GE (i.e., ECCS pumps, RHR heat exchangers, etc.). Accordingly, the objective of this letter is to obtain formal USNRC concurrence that GE functions are in conformance with the interpretation and intent of the pertinent regulation.

The specific parts of Paragraph III.B.5 in question include Items a, c, and d. These items are herein discussed in order.

I. Paragraph III.b.5.a

Paragraph III.B,5, Item a requires that fracture toughness tests include a certification by the licensee or person performing the tests to verify that the tests have been performed in compliance with Appendix G of the regulation. Specifically, the regulation reads as follows:

> "The tests have been performed in compliance with the requirements of this Appendix."

A Certified Material Test Report is prepared and received by GE for those fracture toughness tests performed for GE by the material suppliers. The Certified Material Test Report certifies compliance with Section III of the ASME Boiler and Pressure Vessel Code (B&PVC) and not with Appendix G of the regulation. Since the fracture toughness requirements of 10CFR50, Appendix G are contained in the ASME B&PVC, Section III, compliance with the Code satisfies the requirements of Appendix G. Verification with Section III, B&PVC, is an established industry-wide practice among the material suppliers.

Those requirements documented in Paragraph III.B.5.a of Appendix G and relating to fracture toughness tests are equally covered in Section III, B&PVC, and therefore certification with Section III, B&PVC, is not a departure from the regulation requirement. The principal requirements reflected in Section III, B&PVC, include the following:*

1) Paragraph NB-2321.1 requires dropweight testing to be performed to the procedure of ASTM E-208-69.

2) Paragraph NB-2321.2 requires impact tests to comply with SA-370 and specimens per SA-370, Figure 11, Type A.

3) Specimen orientation is defined by material form by NB-2322.12.

---

* Personnel Qualitication and calibration requirements are discussed in Section II and III of this letter.

4) Paragraphs NB-2321.1 and NB-2321.2 require that, as appropriate, the test temperatures, lateral expansion, absorbed energy, percent sheer fracture, orientation and location of all tests be reported in the certified Material Test Report.

II. Paragraph III.B.5.c

Paragraph III.B.5, Item c, addresses the subject of periodic calibration. The regulation reads as follows:

"5. Fracture toughness test results shall be recorded and shall include a certification by the licensee or person perrorming the test ror the licensee that:

c. The tests have been conducted using machines and instrumentation with available records of periodic calibration, and..."

GE interprets the intent of the above regulation as requiring certification that records of periodic calibrations are available. The Certified Material Test Report does not specifically certify that records of periodic calibration are available. Although the Certified Material Test Report is kept available by GE, other records of periodic calibration are not kept by GE.

It is important to note that the intent of the regulation is met by the Certified Material Test Report. The Certified Material Test Report certifies compliance with Section III, B&PVC. The requirement inherent in the regulation is covered by Section III, B&PVC. Frequency of calibration for temperature measuring devices and impact test machines is defined by Paragraph NB-2306. Calibration methods are required to meet ASTM E-23-72. Calibration records to be generated and retained per Paragraph NA-4610.

III. Paragraph III.B.5.d

Paragraph III.B.5, Item d, requires that records of the qualifications of individuals performing the test be available upon request. The regulation reads as follows:

"d. Records of the qualifications of the individuals performing the test are available upon request."

Again, GE maintains on record, a Certified Material Test Report certifying the tests are in compliance with Section III, B&PVC. Other additional records relating to the qualifications of individuals are not kept by GE. The regulation requirement that records related to qualification of individuals be generated and maintained is equivalently covered by NA4133.1(b), Section III, B&PVC, Winter 1976 Addendum.

In Summary, GE believes its functions are in full compliance with the interpretation and intent of Paragraph III.B.5 of Appendix G. lOCFR50. The requirements in the regulation are redundant with the requirements of Section III of the ASME Code. The Certified Material Test Report, therefore complies with the requirements of the regulation. assures the availability of periodic

calibration records, and provides for the generation and maintenance of those records relating to the qualifications of individuals.

Your concurrence on this matter is requested.

This matter has been discussed with Pryor M. Randall by Robert J. Murillo, and Mr. Murillo may be contacted if there are any questions, (408) 925-3406.

ATTACHMENT B TO QUESTION 251.2
Text of Minoque Letter

This is in reply to your letter to Mr. E. G. Case, "Interpretation of 10 CFR 50, Appendix G, Fracture Toughness Requirements" (Letter No. 280-256-77, October 17, 1977). It calls attention to paragraphs III.B.5.a., c., and d., which cover certification that the tests on materials of the reactor coolant pressure boundary comply with Appendix G, that the test equipment was properly calibrated, that test personnel were properly qualified and that the proper records were kept. Your letter calls attention to similar requirements in Section III of the ASME boiler and Pressure Vessel Code and asks NRC concurrence with your position that compliance with the Code will be regarded as compliance with the regulation. In reply, I wish to make two points. First, we agree that for those tests required by the Code, which are the only tests considered in your letter, the provisions of paragraphs III.B.5.a., c., and d., will be met satisfactorily if the Code requirements are met. Second, the intent of paragraph III.B.5 is to require that the calibration, qualification, and record retention functions for any supplemental fracture toughness tests be done in a manner equivalent to the way those functions are done for tests required by the Code. The intent may not be clear, because paragraph III.B. refers only to Charpy V-notch impact tests and dropweight tests. This ambiquity and the record retention requirements will be clarified in a general revision of Appendix G that is now being drafted.

5.4 COMPONENT AND SUBSYSTEM DESIGN

5.4.1 Reactor Recirculation Pumps

5.4.1.1 Safety Design Bases

The reactor recirculation system has been designed to meet the following safety design bases:

(1) An adequate fuel barrier thermal margin shall be assured during postulated transients.

(2) A failure of piping integrity shall not compromise the ability of the reactor vessel internals to provide a refloodable volume.

(3) The system shall maintain pressure integrity during adverse combinations of loadings and forces occurring during upset, emergency, and faulted conditions.

5.4.1.2 Power Generation Design Bases

The reactor recirculation system meets the following power generation design bases:

(1) The system shall provide sufficient flow to remove heat from the fuel.

(2) Deleted

(3) System design shall minimize maintenance situations that would require core disassembly and fuel removal.

5.4.1.3 Description

The reactor recirculation system consists of the two recirculation pump loops external to the reactor vessel. These loops provide the piping path for the driving flow of water to the reactor vessel jet pumps. (See Figure 5.4-1 and Drawing M05-1072). Each external loop contains one high capacity motor-driven recirculation pump, a flow control valve, and two motor-operated gate valves (for pump maintenance). Each pump suction line contains a flow measuring system. The recirculation loops are part of the reactor coolant pressure boundary and are located inside the drywell structure. The jet pumps are reactor vessel internals. Their location and mechanical design are discussed in subsection 3.9.5, “Reactor Pressure Vessel Internals”. However, certain operational characteristics of the jet pumps are discussed in this subsection. A tabulation of the important design and performance characteristics of the reactor recirculation system is shown in Table 5.4-1. The head, NPSH, flow, and efficiency curves are shown in Figure 5.4-3.

Instrumentation and control description is provided in subsection 7.1.2.

The recirculated coolant consists of saturated water from the steam separators and dryers that has been subcooled by incoming feedwater. This water passes down the annulus between the reactor vessel wall and the core shroud. A portion of the coolant flows from the vessel, through the two external recirculation loops, and becomes the driving flow for the jet pumps. Each of the two external recirculation loops discharges high pressure flow into an external manifold from which individual recirculation inlet lines are routed to the jet pump risers within the reactor

vessel. The remaining portion of the coolant mixture in the annulus becomes the driven flow for the jet pumps. This flow enters the jet pump at suction inlets and is accelerated by the driving flow. The flows, both driving and driven, are mixed in the jet pump throat section and result in partial pressure recovery. The balance of recovery is obtained in the jet pump diffuser (see Figure 5.4-5.). The adequacy of the total flow to the core is discussed in section 4.4, "Thermal and Hydraulic Design."

The allowable heatup rate for the recirculation pump casing is the same as that for the reactor vessel. If one loop is shut down, the idle loop can be kept hot by leaving the loop valves open; this permits the reactor pressure plus the active jet pump head to cause reverse flow in the idle loop.

Because the removal of the reactor recirculation gate valve internals would require unloading the core due to the resulting draining of coolant, the objective of the valve trim design is to minimize the need for maintenance of the valve internals. The valves are provided with high quality backseats that permit renewal of stem packing while the system is full of water. The reactor recirculation discharge gate valve internals may be removed for maintenance without unloading the core with safety related jet pump plugs installed per CPS procedures.

When the pump is operating at 25% speed, the head provided by the elevation of the reactor water level above the recirculation pump is sufficient to provide the required NPSH for the recirculation pumps, flow control valve and jet pumps. When the pump is operating at 100% speed most of the NPSH is supplied by the subcooling provided by the feedwater flow. Temperature detectors are provided in the recirculation lines; and pressure transmitters are provided to measure steam dome pressure, which is converted to temperature. The difference between these two temperature readings is a direct measurement of the subcooling. If the subcooling falls below approximately 8°F, the 100% speed power supply is tripped to the 25% speed power source to prevent cavitation of recirculation pump, jet pumps, and/or the flow control valve.

When preparing for hydrostatic tests, the nuclear system temperature must be raised above the vessel nil ductility transition temperature limit. For such tests, heatup is usually accomplished using RHR and/or decay heat. However, the recirculation pumps can be operated in slow speed if necessary to supply heat to raise the system temperature.

The recirculation pump is driven by a constant speed motor and is equipped with mechanical shaft seal assemblies. The two seals built into a cartridge can be readily replaced without removing the motor from the pump. Each individual seal in the cartridge is designed for pump operating pressure so that any one seal can adequately limit leakage in the event that the other seal should fail. The pump shaft passes through a breakdown bushing in the pump casing to reduce leakage in the event of a gross failure of both shaft seals. The cavity temperature and pressure drop across each individual seal can be monitored.

Each recirculation pump motor is a constant speed, vertical, solid shaft, totally enclosed, air-water cooled, induction motor. Its performance under normal and low speed is given in Table 5.4-1. The combined rotating inertias of the recirculation pump and motor provide a slow coastdown of flow following loss of power to the drive motors so that the core is adequately cooled during the transient. This inertia requirement is met without a flywheel.

The pump discharge flow control valve can throttle the discharge flow of the pump proportionally to an instrument signal. The flow control valve is provided with an equal percentage

characteristic. The recirculation loop flow rate can be changed, within the expected flow range, in response to changes in system demand.

The design objective for the recirculation system equipment is to provide units that will not require removal from the system for rework or overhaul. Pump casing and valve bodies are designed for a 40-year life and are welded to the pipe.

The pump drive motor, impeller, and wear rings and flow control valve internals are designed for as long a life as is practical. Pump mechanical seal parts and the valve packing are expected to have a life expectancy which affords convenient replacement during the refueling outages.

The recirculation system piping is of all-welded construction and is designed and constructed to meet the requirements of the applicable ASME and ANSI codes.

The reactor recirculation system pressure boundary equipment is designed as Seismic Category I equipment. As such, it is designed to resist sufficiently the response motion for the safe shutdown earthquake at the installed location within the supporting structure. The pump is assumed to be filled with water for the analysis. Snubbers located at the top of the motor and at the bottom of the pump casing are designed to resist the seismic reactions.

The recirculation piping, valves, and pumps are supported by hangers to avoid the use of piping expansion loops that would be required if the pumps were anchored. In addition, the recirculation loops are provided with a system of restraints designed so that reaction forces associated with the postulated pipe breaks do not jeopardize drywell integrity. This restraint system provides adequate clearance for normal thermal expansion movement of the loop. The criteria for the protection against the dynamic effects associated with a postulated pipe rupture are contained in section 3.6.

The recirculation system piping, valves, and pump casings are covered with thermal insulation.

The insulation is prefabricated into components for field installation. Removable insulation is provided at various locations to permit periodic inspection of the equipment.

A layout of the external piping and the major equipment, showing their orientation with respect to the reactor pressure vessel is shown on Figure 5.4-20.

5.4.1.4 Safety Evaluation

Reactor recirculation system malfunctions that pose threats of damage to the fuel barrier are described and evaluated in Chapter 15, "Accident Analyses". It is shown in Chapter 15 that none of the malfunctions result in significant fuel damage. The recirculation system has sufficient flow coastdown characteristics to maintain fuel thermal margins during abnormal operational transients.

The core flooding capability of a jet pump design plant is discussed in detail in the emergency core cooling systems document filed with the NRC as a General Electric topical report (Reference 1). The ability to reflood the BWR core to the top of the jet pumps is shown schematically in Figure 5.4-6 and is discussed in Reference 1.

Piping and pump design pressures for the reactor recirculation system are based on peak steam pressure in the reactor dome, appropriate pump head allowances, and the elevation

head above the lowest point in the recirculation loop. Piping and related equipment pressure parts are chosen in accordance with applicable codes. Use of the listed code design criteria assures that a system designed, built, and operated within design limits has an extremely low probability of failure caused by any known failure mechanism.

General Electric Purchase Specifications require that the recirculation pumps first critical speed shall not be less than 130% of operating speed. Calculation submittal was reviewed and approved by General Electric Design Engineering.

General Electric Purchase Specifications require that integrity of the pump case be maintained through all transients and that the pump remain operable through all normal and upset transients. The design of the pump and motor bearings are required to be such that dynamic load capability at rated operating conditions is not exceeded during the safe shutdown earthquake. Calculation submittal was required.

Pump overspeed occurs during the course of a LOCA due to blowdown through the broken pump loop. Design studies determined that the overspeed was not sufficient to cause destruction of the motor.

The recirculation pump seals are normally cooled by the component cooling water system described in Subsection 9.2.2. GE topical report NEDO-24083 discusses the consequences of losing the pump seal cooling water. This report concludes that the loss of cooling water will not entail unacceptable consequences.

5.4.1.4.1 Compliance with General Design Criteria

The recirculation flow control system is evaluated against the general design criteria as follows:

a. Criteria 20, 21, 23, and 25: Applicable to protection systems only. The recirculation flow control system is a reactivity control system but is not a protection system.

b. Criterion 26: The recirculation flow control system is the second reactivity control system required by this criterion. The requirements of this criterion do not apply within the system itself.

c. Criterion 27: The recirculation flow control system is not intended to control reactivity following an accident. Consequently, this criterion does not apply.

d. Criterion 28: The transient analyses in Chapter 15 evaluate the consequences of reactivity events involving changes in reactor coolant temperature and pressure, and cold water addition. The results of these analyses indicate that none of these postulated events result in damage to the reactor coolant pressure boundary. In addition, the integrity of the core, its support structures and other reactor pressure vessel internals are maintained so that the capability to cool the core is not impaired for any of these events.

5.4.1.5 Inspection and Testing

Quality control methods were used during fabrication and assembly of the reactor recirculation system to assure that design specifications are met. Inspection and testing is carried out as

described in Chapter 3. The reactor coolant system was thoroughly cleaned and flushed before fuel was loaded initially.

Before the preoperational test program, the reactor recirculation system was hydrostatically tested at 125% reactor vessel design pressure. Preoperational tests on the reactor recirculation system also included checking operation of the pumps, flow control system, and gate valves and are discussed in Chapter 14.

During the startup test program, horizontal and vertical motions of the reactor recirculation system piping and equipment were observed; supports were adjusted, as necessary, to assure that components are free to move as designed. Nuclear system responses to recirculation pumps trips at rated temperatures and pressure were evaluated during the startup tests, and plant power response to recirculation flow control was determined.

5.4.1.6 Operation

Salient recirculation system operations are discussed in this section. More detailed description may be found in the appropriate operator manuals. The operation in terms of the power-flow operating map is discussed in Section 4.4.

5.4.1.6.1 Normal Operation

Normal plant operation presumes that no abnormal condition exists due to such events as scram, operator error, or turbine trip. In this context, an operator error is considered an action that is contrary to plant operating procedures.

5.4.1.6.1.1 Start

The system is started after the core is loaded, the vessel internals installed, the head is in place and the water level is at least at the normal level. The system valves are oriented to their startup positions as follows:

a. Initial conditions (recirculation system):

   (1) Discharge valve open

   (2) Suction valve open (allows cleanup suction from the recirculation loops);

   (3) Flow control valve in ≤10% position; and

   (4) Pump off

b. Startup procedures

   (1) Start pump (the automatic sequencing enables the 100% speed power supply to start the pumps, closes the LFMG motor feeder breaker to bring it up to speed, trips the 100% speed supply when 90% to 100% speed is reached, and closes the LFMG output breaker when the pump has coasted down to approximately 25% speed); and

   (2) Open FCV to the fully open position.

5.4.1.6.1.2 Heatup and Pressurization

During vessel pressurization and heatup to rated conditions, the system is run by the LFMG set at 25% speed with the FCV fully open.

5.4.1.6.1.3 Low Thermal Power

Power ascension up to approximately 25% to 35% power is accomplished by pulling control rods. The recirculation system operating mode is 25% with the flow control valve wide open.

5.4.1.6.1.4 High Thermal Power

The system is transferred to 100% speed after the flow control valve cavitation interlock is reset (approximately 25% thermal power). This allows further power ascension by core flow control as well as by control rod movement.

a. Transfer procedure (power ascension):

   (1) Close the FCV to the ≤10% position.

   (2) Transfer to 100% speed - FCV ≤10% position (the automatic sequencing opens the LFMG generator breaker, opens the LFMG motor feeder breaker, and closes the 100% speed breaker).

b. Transfer sequence (normal shutdown):

   (1) Close FCV's to ≤10% position (100% speed).

   (2) Transfer to 25% speed - FCV ≤10% position (the automatic sequencing opens the 100% speed breaker, closes the LFMG motor feeder breaker, and closes the LFMG generator breaker when the pump has coasted down to 25% speed).

   (3) Open FCV's to wide open position.

5.4.1.6.1.5 Power - Flow Control

Refer to Subsection 4.4.3.3 for a description of power-flow control. A power-flow operating map, Figure 4.4-5 shows normal operational limits and shows regions of operation.

5.4.1.6.2 Abnormal Operation

Abnormal operation is defined as any operation other than normal routine and includes such events as operator error, plant operational transients such as MSIV closure and turbine trip, or an accident condition, such as a recirculation suction line double-ended pipe break.

The recirculation system is designed to achieve the following two major objectives for abnormal operation:

a. Plant safety - those system functions required to mitigate an abnormal operational event, that is functions for which credit is taken in the event analysis; and

b. Power generation - those functions necessary to maximize power generation capability and ensure longevity of equipment. These functions prevent steady-state operation of system equipment in modes where damage can occur and prevent unnecessary reactor protection system (RPS) activation. Equipment damage would make it necessary to inspect or replace equipment during an outage, thereby increasing plant unavailability. Unnecessary scrams also increase plant unavailability.

5.4.1.6.2.1 Safety

5.4.1.6.2.1.1 Moderate and Infrequent Events

Trip of the recirculation pumps is needed to mitigate the effects of turbine or generator trip events.

5.4.1.6.2.1.2 Accident Events

Trip of the recirculation pumps is needed to mitigate the vessel overpressure transient and reduce core power level for the anticipated transients without scram (ATWS) event.

5.4.1.6.2.2 Power Generation

5.4.1.6.2.2.1 Cavitation Interlocks

Cavitation interlocks are installed to provide protection against:

a. Operator errors, and

b. Rapid transients such as scram where NPSH conditions deteriorate rapidly and the operator is not expected to respond in time to prevent long-term operation in the cavitation region.

5.4.1.6.2.2.2 Flow Control Valve Automatic Runback

The flow control valves close in response to a trip of one feedwater pump and indication of a reactor water level decrease (level drops to Level 4). This runback prevents a scram from a low level condition caused by the feedwater pump trip.

5.4.1.6.2.2.3 Flow Control Valve Minimum Position Interlock

The interlock is installed to prevent unexpected system startup or transfer from 25% to 100% speed unless the valve is in the minimum position. The objective is to prevent scrams due to a rapid flow increase resulting from an operator failure to close the FCV prior to the unexpected start of speed transfer. For planned speed changes the interlock is over-ridden and administrative controls ensure the FCV is ≤10% prior to the start of speed transfers.

5.4.1.6.2.2.4 LFMG Output Breaker Control

The LFMG set output breaker closing logic includes interlocks which prevent breaker closure until the 100% power supply is tripped and residual voltages in the motor have decayed. These interlocks prevent possible damage to the generator which could result if the generator was connected to the pump while the 100% speed power supply was still active.

5.4.1.6.2.2.5 High Loop Flow Mismatch

Restrictions on mismatch of the flow in one loop to the other are placed on the system due to the DBA analysis as stated in Subsection 5.4.1.7.8. Such operation is normally precluded by operating procedures.

5.4.1.6.2.2.6 Loop Suction and Discharge Isolation Valve Position

The pump is tripped for isolation valve positions less than 90% open to prevent pump damage from no flow if isolation valve closure is inadvertently initiated while the pumps are running.

5.4.1.6.2.2.7 Trip to 25% Speed

The LFMG set is activated in most 100% speed trip cases to avoid scram recovery delays due to vessel bottom head fluid stratification.

5.4.1.6.3 One-Pump Operation

5.4.1.6.3.1 One Recirculation Pump Operation

The basis for one pump operation is contained in Chapter 15, Appendix B.

The automatic interlocks do not fully protect against jet pump cavitation in this operating mode. In order, to avoid jet pump cavitation, reactor operation is limited to the areas above the cavitation protection line on Figure 5.4-21. The flow control valve cavitation interlock remains functional in this operating mode.

5.4.1.6.3.2 Restart of One Recirculation Pump

In order to maintain plant availability, it is necessary to follow specific procedures for restart of one pump to return to two-pump operation. Otherwise, a scram will result. Specific procedures to avoid scram are determined during startup testing and include reducing active pump flow to at least 50% before starting the inactive pump.

5.4.1.6.4 Automatic Load-Following (ALF) Characteristics

Deleted

5.4.1.6.5 Trip and Start Functions

The power supplies to the pump motor are tripped or started as shown in Table 5.4-4. This table describes a number of possible recirculation events and then shows in tabular form the actions which result.

5.4.1.6.6 Suction and Discharge Block Valve Operation

The 20-inch suction and discharge motor-operated gate valves provide pump and flow control valve isolation during maintenance. The operators take 2 minutes to either fully open or close

the valve. The suction valve is capable of closing with up to a 50-psi differential, while the discharge valve can close with up to a 400-psi differential. Both valves are remote-manually operated.

5.4.1.6.7 Residual Heat Removal System Operation

One of the sources of water supply for the RHR System operation is the suction side of Loop B of the recirculation system. The RHR system uses this suction source during the shutdown cooling mode.

5.4.1.7 Safety Related Considerations

5.4.1.7.1 Pressure Integrity

Design pressures for the reactor recirculation system are based on peak steam pressure in the reactor dome, appropriate pump head allowances, and the elevation head above the lowest elevation in the recirculation loop. Piping and related equipment pressure parts are chosen in accordance with applicable codes. Use of the code design criteria assures that a system designed, built, and operated within design limits has an extremely low probability of failure caused by any known failure mechanism.

5.4.1.7.2 Bearing Load Capability

In order to assure functional performance of the recirculation pump and motor, the following additional requirement is met:

The pump and motor bearings shall have sufficient dynamic load capability at rated operating conditions to withstand the safe shutdown earthquake and to be able to coast down to 40% of rated speed on loss of power.

5.4.1.7.3 Pump Shaft Critical Speed

The first critical speed of the recirculation pump shaft has been calculated to be about 160% of the operating speed. The absence of shaft vibration has been verified by testing the pump under rated speed conditions in the supplier's test loop. The absence of vibration was further verified during preoperational testing.

5.4.1.7.4 Pump Bearing Integrity

Adequacy of the bearing design has been verified by full temperature and pressure tests in the supplier's test loop.

5.4.1.7.5 Pipe Rupture

Protection against dynamic effects of pipe rupture is described in Section 3.6 of the FSAR. Protection has been provided for the postulated break locations and break types.

5.4.1.7.6 Suction and Discharge Block Valve Close Rate

Valves will not close in such a manner that would affect the coastdown flow rate of the pump. An analysis was made to determine the effect of block valve closure on recirculation pump coastdown. The analysis postulates that coincident with a recirculation pump trip, the block

valves begin to close. It was concluded that any closure time greater than 1 minute will have no effect on coastdown times.

5.4.1.7.7 Flow Control Valve Actuator Stroking Rate

The worst single failure or operator error would result in a valve actuator stroking rate within the limitations stated in Subsection 5.4.1.9.1.

5.4.1.7.8 Loop Flow Balance

The design-basis loss-of-coolant accident analyses assume that the total flow through one bank of jet pumps is close to the total flow of the other bank. If it is assumed that one bank is at a higher flow than the other and a design-basis pipe rupture occurs in the high-flow loop, calculated peak cladding temperatures higher than those calculated in the DBA analysis could result, since the low flow loop could not provide as much flow during the first few seconds of the transient. Consequently, loop flow imbalance restrictions are placed on the system.

5.4.1.7.9 Thermal Shock

When the recirculation system is inactive and thermal power is too low to support much natural circulation flow, stratification of water in the recirculation loops or vessel bottom head can occur. If core flow is increased in such a condition, rapid replacement of cold with hot water shocks the adjacent components increasing their usage. Although the reactivity transient on the core is not significant, the increased usage is not acceptable. Consequently, restrictions are placed on allowable inactive loop suction temperature before startup and on core flow increases based on bottom head drain line to vessel saturation temperature.

5.4.1.7.10 Anticipated Transients Without Scram (ATWS)

Trip of the recirculation pumps from 100% to zero speed is needed to limit the initial vessel pressure rise and to reduce the steam flow rate to the suppression pool by reducing thermal power, if an anticipated transient without scram occurs.

For the purpose of mitigating the consequences of an ATWS, the recirculation pump motors (normal and low frequency power supplies) trip off (RPT) on an ATWS signal provided by the system (either on high reactor dome pressure or on low-low water level, Level 2, of the reactor vessel).

The recirculation pump and motor has rotational inertia as specified in Table 5.4-1. The recirculation pump continues to add pumping energy to the water in the recirculation loop during the coastdown period which in turn increases the pumping action through the core loop. This inhibits void retention in the core and so promotes power production which must be minimized.

5.4.1.8 Flow Control Components Description

5.4.1.8.1 Flow Control Valves (FCV)

The FCV is a ball valve with a linkage connected to the actuator shaft.

The Flow Control Valve (FCV) with the enclosed topworks consists of the body, the bonnet, shaft/ball assembly, the upper and lower covers, the packing cartridge, and the yoke.

The forces required to actuate the valve vary with the position.

Should the valve ball seize, the most severely stressed part would be the link. At the maximum actuator force the stress would be about equal to the yield stress.

All other parts are stressed below their yield points, and no failure is therefore expected.

The result of the above failures would not affect the pressure integrity of the valve or allow the ball to break away from the shaft.

The following are definitions of the positions of the flow control valve:

Closed position - the fully closed position of the valve ball. This is a reference position for identifying valve ball angular position. Physically, the valve cannot reach this position.

Minimum or zero position - the most closed actual valve position. This is the ball position that establishes 20% to 25% rated pump flow at 100% speed. This position is approximately 24° from the fully closed position, and is defined as 0% position.

Wide open position - the actuator stop. This is approximately 90° from the closed position and is defined as the 100% open position. The valve has achieved the maximum required C_v (5,750) before this position (at approximately 90% open).

Fully open position - the position at which the valve has achieved the maximum allowed flow. This position is electronically limited to less than the “wide open position” and has been determined by testing.

Stroke - the movement between zero and the wide open positions of the actuator.

5.4.1.8.2 Hydraulic Equipment

Each flow control valve has a separate set of hydraulic equipment. The hydraulic circuit for each FCV is composed of the actuator unit (mounted on the FCV), the circulation unit (located in the piping high point, outside the drywell), and the interconnecting pipe. Drain and vent valves are located in the interconnecting piping to facilitate maintenance.

The actuator unit provides the mechanical input to the FCV. The circulation unit, in conjunction with the circulation valves on the actuator unit, provides a small steady flow through critical portions of the interconnecting piping to reduce stagnation and aeration and minimize the effects of ambient temperature on performance. The hydraulic power unit, in response to control signals from the electronic equipment, provides the hydraulic inputs (pressure and flow) to the actuator unit.

5.4.1.8.2.1 Flow Control Valve Actuator

The actuator consists of a custom, double-acting, dual rod, hydraulic cylinder; pilot operated check valves (for lockup); a velocity limit orifice (to limit stroking rate); circulation orifices (to prevent stagnation and aeration); and limit switches (to provide necessary signals to electrical control system). Hydraulic components are manifolded together to enhance reliability. The cylinder is designed specifically to meet the performance, environmental, duty cycle, and

dimensional and load interface requirements of this application. Dual seals, separated by a drain cavity, are provided for each rod.

All portions of the actuator, other than the drain circuits, are rated for operation at 3000 psi. The drain circuit is rated for operation at 150 psi. Each actuator is hydrostatically tested by the manufacturer in accordance with applicable standards. The normal operating pressure is 1850 psi to 1950 psi and the drain pressure is less than 150 psi.

5.4.1.8.2.2 Circulation Unit

The circulation unit, located outside the drywell, consists of a manifold and two circulation orifices which, in conjunction with the circulation orifice on the actuator, provide a small circulation flow through the interconnecting piping to prevent stagnation and aeration. The circulation unit is rated for operation at 3000 psi and hydrostatic testing at 4500 psi. Circulation flow is returned to the reservoir by a drain line from the circulation unit.

5.4.1.8.2.3 Hydraulic Power Unit

The hydraulic power unit, located outside the drywell, is a skid-mounted unit incorporating the reservoir, pumping units, pressure and flow control valves, fluid conditioners, and alarm and indicating devices. Extensive use of manifolds, a rigid base structure, very fine filtration, and a high degree of redundancy enhance reliability. All circuits which are subjected to the normal operation pressure of 1850 psi to 1950 psi are rated for operation at 3000 psi or greater and are designed to withstand a hydrostatic test pressure at 4500 psi.

5.4.1.8.2.4 Interconnecting Piping and Drain and Vent Valves

The piping which interconnects the actuator, circulation unit, and hydraulic power unit is sized to meet both strength and performance requirements. All pipe is seamless stainless steel. Design pressure is 2100 psig for all piping to the actuator and 125 psig for the circulation unit drain line.

5.4.1.8.2.5 Hydraulic Fluid

The hydraulic fluid used is Fyrquel EHC. This is a phosphate ester fluid which has the lubricity, viscosity, and other characteristics necessary for performance and reliability while providing protection against fire.

5.4.1.9 Flow Control System Description

5.4.1.9.1 Safety Requirements

The worst single failure or operator error shall result in an actuator stroking rate of less than or equal to 30% full stroke per second.

The control system will not close the flow control valve in the unbroken loop and thus LOCA recirculation pump coastdown will not be affected.

5.4.1.9.2 Design Description

The FCV position is varied by a hydraulic actuator mounted on the valve. Hydraulic lines lead from the actuator to a hydraulic power unit. The power unit controls the line pressure and the

fluid flow to or from either side of the actuator piston, thereby changing flow control valve position.

The remainder of the system incorporates both manual and automatic features using feedback loops of FCV position.

During normal operation, actuator stroking rate is limited to 11% per second or less by limiting the velocity demand signal (position controller output) to an analogous value. In addition, several interlocks are provided to limit travel if the velocity is excessive.

5.4.1.9.3 Valve Actuation Equipment

An electrohydraulic servo system, consisting of a position loop (FCV ball position), moves the FCV in response to the position demand signal. One servo system is provided for each FCV.

Similarly, a valve position sensor, in conjunction with suitable signal conditioners, provides an FCV position feedback signal.

The position controller, a proportional plus integral plus derivative controller, compares the position feedback signal with the position demand signal, and amplifies the resulting error signal to provide a velocity demand signal which will cause the actuator to travel in the direction necessary to reduce the position error to zero.

Limiting circuits within the position controller limit its output signal (velocity demand signal) so that sustained actuator velocity will not exceed 11% full stroke per second, even if large or rapid changes in the position demand signal occur.

The electronic equipment incorporates interlock circuits which will inhibit motion in the event that any of the following occur:

a. Position demand signal exceeds preset limits.

b. Deleted

c. FCV position rate of change exceeds preset limits.

d. Excessive oscillations.

e. Prolonged position error.

In addition, the various circuits are arranged such that the FCV will be locked in its last position if any of the following occur:

a. Loss of control signal to HPU.

b. Loss of electrical power to HPU.

c. Loss of control power.

d. Loss of hydraulic power.

5.4.1.9.4 Circuit Description

A brief circuit description of the hydraulic equipment follows to explain how the equipment functions.

A. Actuator Unit and Circulation Unit

The hydraulic cylinder provides the mechanical input to the FCV in response to flow from the HPU. When the HPU directs flow to the "open" port and allows flow from the "close" port to vent to the reservoir, the cylinder moves the FCV stem to open the valve. When flow is reversed, FCV motion reverses. Velocity is proportional to flow. During normal operation, the HPU directs pressure, via the "pilot" line, to the pilot ports of the pilot operated check valves on the actuator unit.

This pressure opens the valves allowing flow to and from the cylinder's "open" and "close" ports. In the event of a manual or interlock initiated shutdown, the HPU vents the pressure from the pilot operated check valves, closing them to trap fluid in the cylinder and thus inhibit motion. Since a loss of pilot pressure closes the pilot operated check valves, loss of hydraulic power inhibits motion.

The velocity limit orifice, located at the cylinder "open" port, restricts flow to and from the port, thus limiting velocity in the event that malfunctions disable the normal electronic velocity limiting circuits.

The desired circulation flow is provided by four circulation valves. The two circulation valves on the actuator direct small equal flows from the "pilot"-line to the "open" and "close" lines, while the two identical valves on the circulation unit direct these flows back to the HPU reservoir.

B. Hydraulic Power Unit

The HPU consists of two identical, redundant subloops for the generation and control of hydraulic flow and pressure. The subloops are interconnected at the lines which direct flow and pressure to the actuator unit and at the common reservoir and drain header. Normally, only one subloop is pressurized at a time. If a hydraulic malfunction occurs while the subloop is controlling the actuator, it will automatically shut down and the alternate subloop will automatically start and assume control. If a second malfunction occurs, the alternate subloop will also shut down.

Fluid storage is provided by the common reservoir. Hydraulic power is generated by the operating subloop's electric motor driven pump. The pump is the fixed displacement, positive displacement type, and thus provides constant flow irrespective of demand of pressure. Pressure is controlled by the operating subloop's relief valve which limits pressure to the required value by metering unneeded flow back to the reservoir. The operating subloop's accumulator reduces pressure transients by providing an absorbing flow when demand changes faster than the relief valve can respond.

Flow to and from the "open" and "close" ports of the actuator is controlled by the operational subloop's servo valve, in response to the electronic signal from the electronic equipment.

Reversing the polarity of the signal reverses the flow paths through the servo valve, thus reversing the direction of the actuator motion. Increasing the magnitude of the signal increases

the opening of the servo valve, increases flow, and thus, actuator velocity. When the signal is zero, the servo valve is closed, thus loss of signal inhibits FCV motion.

Pressure to the actuator's pilot operated check valve pilot ports is controlled by a three-position, solenoid operated, four-way valve. For maximum reliability, the valve is normally energized to power the spool to the "vent" (inhibit motion) position as well as the "pressurize" (operate) position. In the event of loss of electrical control signals, however, internal springs actuate the valve to an alternate "vent" position to close the check valves and thus inhibit motion. The solenoid valve of the alternate (nonoperating) subloop is automatically isolated from the operating subloop's solenoid valve, as well as the actuator, by a shuttle valve. It should be noted that it is physically impossible for the shuttle valve to simultaneously isolate both solenoid valves from the actuator, thus shuttle valve failure cannot prevent FCV "lock-up."

The solenoid operated valves also control pilot operated four-way valves located between the servo valves and the common "open" and "close" lines. As with the solenoid valve, the pilot operated four-way valves are powered to both the "operate" (open) and "isolate" (close) positions, but will close anyway in the event of either loss of hydraulic power or loss of electrical power to the solenoid valves. When closed, this valve blocks its servo valve from the common open and close lines, as well as from the alternate subloop, and thus will inhibit motion even if the pilot operated check valves and the servo valve remain open due to malfunction.

In addition to the above components, the circuit incorporates suction, reservoir vent, pressure line, and return line filters to control fluid cleanliness for desired reliability; temperature control valves and air-oil heat exchangers to control fluid temperature for desired reliability; manually operated shut off valves and check valves to facilitate maintenance; and alarm devices and visual indicators to monitor HPU status. The alarm devices also activate interlocks within the logic circuits.

5.4.1.9.5 Hydraulic Power Unit Logic Controls

5.4.1.9.5.1 General Description

The HPU for each FCV is controlled by a separate set of electrical logic circuits. The logic circuits also provide switching functions within the analog control circuits which form the velocity loops.

The "heart" of the logic circuits is a programmable controller. Based on the various inputs to it (operator pushbuttons, HPU, and analog circuit alarm devices, etc.) the programmable controller provides outputs to switch analog circuits, control HPU motors and solenoids, power indicator lights, etc. Where contact closure is necessary in lieu of an a-c or d-c signal (annunciators, motor controls, etc.), interface relays are provided.

Essentially, the programmable controller performs the same function often performed by a large number of "instantaneous" and delayed response relays.

5.4.1.9.5.2 Functional Description

The logic circuits allow the operator to select which redundant subloop will control the FCV actuator and whether or not the alternate subloop will start automatically and assume control in the event that the operating subloop experiences a malfunction. They also allow the operator to start and stop the hydraulic pump motors and manually transfer control from one subloop to the

other. Interlocks are provided to minimize the risk of an operator inadvertently shutting down a subloop which is controlling the actuator, or placing a disabled subloop in control of the actuator.

The logic circuits also incorporates interlock circuits which automatically initiate the FCV "lockup" (motion inhibit) and shut down the HPU if any of the following occur:

a. Drywell pressure high.

b. Position demand signal out of range.

c. Actuator velocity excessively high.

d. Rate of change of FCV position excessively high.

e. Actuator oscillating (instability).

f. Hydraulic fluid temperature excessively high.

g. Hydraulic reservoir fluid level low or excessively low.

On the other hand, there are several nondamaging conditions resulting from possible malfunction within redundant circuits.

These nondamaging conditions are as follows:

a. Loss of pump outlet pressure.

b. Hydraulic fluid temperature high, but not damaging.

When the above events occur, the logic circuits will allow uninterrupted operation.

Finally, the logic circuits operate indicators and annunciators to provide information of FCV and HPU status to operating personnel. Information includes whether or not the FCV motion is inhibited, whether or not the redundant subloop is disabled, status of HPU filters, and the like.

It should be noted that for maximum assurance of inhibiting FCV motion, the logic circuits accomplish the following when initiating an FCV "lock-up":

a. Switches analog circuits to lock position controller output at mid-range (zero velocity) value.

b. Switches analog circuits to provide zero velocity signal (zero amps) to both servo valves, irrespective of controller output.

c. De-energizes the "operate" solenoids of both subloops solenoid valves.

d. Energizes the "isolate" (lockup) solenoids of both subloop solenoid valves.

e. Stops both hydraulic pump motors.

f. Inhibits both subloops from being restarted and placed in control until manually reset.

5.4.1.10 Low-Frequency Motor-Generator (LFMG) Set

5.4.1.10.1 Description

Refer to Subsection 7.7.1.3.3.3.

5.4.1.10.2 Safety

The LFMG set is nonessential equipment and has no safety function. However, design requirement is that the LFMG set cannot interfere with a recirculation system safety function (e.g., RPT).

5.4.1.10.3 Power Generation

The basic design requirements for the LFMG set are power generation oriented, that is, the purpose of the LFMG set is to prevent cavitation of the flow control valve at low circulation flows while maintaining enough flow to prevent reactor pressure vessel temperature stratification. Many events that cause the recirculation pumps to trip from the main power source will cause the LFMG set to start and pick up the pumps at 25% speed to maintain circulation.

5.4.1.11 Power Supplies

5.4.1.11.1 General

The pump motors can be supplied from a nonessential LFMG set. Interlocks are provided to prevent powering of the pump motor from both power sources simultaneously. The two class IE breakers are used for the RPT system.

The recirculation system power supplies are designed so that no single failure of a power supply can prevent the action of the RPT safety function, nor can the single failure of a power supply prevent the protection of equipment required under the power-generation design-basis.

5.4.1.11.2 Power Supply Arrangement

A typical arrangement of the various power supplies needed to power the recirculation system is shown in Figure 5.4-23. A single-line diagram of the auxiliary power system showing the recirculation pump motor and LFMG set power supplies, the 120-Vac instrument bus, and the 125-Vdc control power to the 4.16-kV circuit breakers is presented on Figure 5.4-24.

5.4.2 Steam Generators (PWR)

Subsection 5.4.2 is not applicable to this USAR.

5.4.3 Reactor Coolant Piping

The reactor coolant piping is discussed in Subsections 3.9.3.1.1.10 and 5.4.1. The recirculation loops are shown in Figure 5.4-1 and Drawing M05-1072. The design characteristics are presented in Table 5.4-1. Avoidance of stress corrosion cracking is discussed in Subsection 5.2.3.4.1.

5.4.4 Main Steam Line Flow Restrictors

5.4.4.1 Safety Design Bases

The main steamline flow restrictors were designed:

(1) To limit the loss of coolant from the reactor vessel following a steamline rupture outside the containment to the extent that the reactor vessel water level remains high enough to provide cooling within the time required to close the main steam line isolation valves.

(2) To withstand the maximum pressure difference expected across the restrictor, following complete severance of a main steam line.

(3) To limit the amount of radiological release outside of the containment prior to MSIV closure.

(4) To provide trip signals for MSIV closure.

5.4.4.2 Description

A main steam line flow restrictor (see Figure 5.4-7) is provided for each of the four main steam lines. The restrictor is a complete assembly welded into the main steam line. It is located in the drywell.

The restrictor limits the coolant blowdown rate from the reactor vessel in the event a main steam line break occurs outside the containment to the maximum (choke) flow of 5.19×10^6 lb/hr at 1025 psig upstream pressure. The restrictor assembly consists of a venturi-type nozzle insert welded, in accordance with applicable code requirements, into the main steam line. The flow restrictor is designed and fabricated in accordance with ASME "Fluid Meters," 6th edition, 1971.

The flow restrictor has no moving parts. Its mechanical structure can withstand the velocities and forces associated with a main steam line break. The maximum differential pressure is conservatively assumed to be 1375 psi, the reactor vessel ASME Code limit pressure.

The ratio of venturi throat diameter to steam line inside diameter of approximately 0.5 results in a maximum pressure differential (unrecovered pressure) of about 23 psi at 100% of rated flow. This design limits the steam flow in a severed line to about 135% of rated flow, yet it results in negligible increase in steam moisture content during normal operation. The restrictor is also used to measure steam flow to initiate closure of the main steam line isolation valves when the steam flow exceeds preselected operational limits.

5.4.4.3 Safety Evaluation

In the event a main steam line should break outside the containment, the critical flow phenomenon would restrict the steam flow rate in the venturi throat to about 135% of the rated value. Prior to isolation valve closure, the total coolant losses from the vessel are not sufficient to cause core uncovering and the core is thus adequately cooled at all times.

Analysis of the steam line rupture accident (see Chapter 15, "Accident Analysis") shows that the core remains covered with water and that the amount of radioactive materials released to the

environs through the main steam line break does not exceed the guideline values of published regulations.

Tests on a scale model determined final design and performance characteristics of the flow restrictor. The characteristics include maximum flow rate of the restrictor corresponding to the accident conditions, unrecoverable losses under normal plant operating conditions, and discharge moisture level. The tests showed that flow restriction at critical throat velocities is stable and predictable.

5.4.4.4 Inspection and Testing

Because the flow restrictor forms a permanent part of the main steam line piping and has no moving components, no testing program is planned. Only very slow erosion will occur with time, and such a slight enlargement will have no safety significance. Stainless steel resistance to erosion has been substantiated by turbine inspections at the Dresden Unit 1 facility, which have revealed no noticeable effects from erosion on the stainless steel nozzle partitions. The Dresden inlet velocities are about 300 ft/sec and the exit velocities are 600 to 900 ft/sec. However, calculations show that, even if the erosion rates are as high as 0.004 in. per year, after 40 years of operation the increase in restrictor choked flow rate would be no more than 5%. A 5% increase in the radiological dose calculated for the postulated main steam line break accident is not significant.

5.4.5 Main Steam Line Isolation System

5.4.5.1 Safety Design Bases

The main steam line isolation valves, individually or collectively, shall:

(1) Close the main steam lines within the time established by design basis accident analysis to limit the release of reactor coolant.

(2) Close the main steam lines slowly enough that simultaneous closure of all steam lines will not induce transients that exceed the nuclear system design limits.

(3) Close the main steam line when required despite single failure in either valve or in the associated controls, to provide a high level of reliability for the safety function.

(4) Use separate energy sources as the motive force to close independently the redundant isolation valves in the individual steam lines.

(5) Use local stored energy (compressed air and/or springs) to close at least one isolation valve in each steam pipeline without relying on the continuity of any variety of electrical power to furnish the motive force to achieve closure.

(6) Be able to close the steam lines, either during or after seismic loadings, to assure isolation if the nuclear system is breached.

(7) Have capability for testing, during normal operating conditions, to demonstrate that the valves will function.

5.4.5.2 Description

Two isolation valves are welded in a horizontal run of each of the four main steam pipes; one valve is as close as possible to the inside of the drywell and the other is just outside the containment.

Figure 5.4-8 shows a main steam line isolation valve. Each is a 24 in. Y-pattern, globe valve. Rated steam flow rate through each valve is 3.79 x 10^6 lb/hr. The main disc or poppet is suspended on the lower end of the stem. Normal steam flow tends to close the valve, and higher inlet pressure tends to hold the valve closed. The pilot poppet which is attached to the end of the valve stem closes a small pressure balancing hole in the poppet. When the hole is open, it acts as a pilot valve to relieve differential pressure forces on the poppet. Valve stem travel is sufficient to give flow areas past the wide open poppet greater than the seat port area. The poppet travels approximately 90% of the valve stem travel to close the main seat port area; approximately the last 10% of valve stem travel closes the pilot valve. The air cylinder actuator can open the poppet with a maximum differential pressure of 200 psi across the isolation valve in a direction that tends to hold the valve closed.

The main disc travels in an axis that is at a 45-degree angle relative to the valve body axis which permits the inlet and outlet passages to be streamlined; this minimizes pressure drop during normal steam flow and helps prevent debris blockage. The pressure drop at 102.4% of rated flow is approximately 10.5 psi. The valve stem penetrates the valve bonnet through a stuffing box that has two sets of replaceable packing. A lantern ring and leak-off drain are located between the two sets of packing (except for valves 1B21-F022A,B,C, and D and 1B21-F028A which have live-loaded Chesterton packing without a leak off line). To help prevent leakage through the stem packing, the poppet backseats when the valve is fully open.

Attached to the upper end of the stem is an air cylinder that opens and closes the valve and a hydraulic dashpot that controls valve speed. The speed is adjusted by a valve in the hydraulic return line bypassing the dashpot piston. Although valve closing time is adjustable to between 3 and 10 seconds, technical specifications require a full closure isolation time of between 3 and 5 seconds based on the values used in the DBA analyses.

The air cylinder is supported on the valve bonnet by four yoke rods. Helical springs around the spring guide shafts close the valve if air pressure is not available in the valve opening direction, or has been shifted to the valve close direction. The motion of the spring seat member actuates switches in the near open and near closed valve positions.

The valve is operated by pneumatic pressure and by the action of compressed springs. The control unit is attached to the air cylinder. This unit contains three types of control valves, pneumatic, a-c from bus A, and a-c from bus B, that open and close the main valve and a separate solenoid valve that exercise it at slow speed. Remote manual switches in the control room enable the operator to operate the valves.

Operating air or nitrogen is supplied to the valves from the plant air system. An air accumulator between the control valve and a check valve provides backup operating air.

Each valve is designed to accommodate saturated steam at plant operating conditions, with a moisture content of approximately 0.25%, an oxygen content of 30 ppm, and a hydrogen content of 4 ppm. The valves are furnished in conformance with a design pressure and

temperature rating in excess of plant operating conditions to accommodate plant overpressure conditions.

In the worst case, if the main steam line should rupture downsteam of the valve, steam flow would quickly increase to about 135% of rated flow. Further increase is prevented by the venturi flow restrictor inside the containment.

During approximately the first 75% of closing, the valve has little effect on flow reduction, because the flow is choked by the venturi restrictor. After the valve is approximately 75% closed, flow is reduced as a function of the valve area versus travel characteristic.

The design objective for the valve is a minimum of 40 years service at the specified operating conditions. Operating cycles (including exercise cycles) are estimated to be 50 to 400 cycles per year (full open to full close and return).

In addition to minimum wall thickness required by applicable codes, a corrosion allowance of 0.120-in. minimum is added to provide for 40-years service.

Design requirements for normal and upset ambient conditions are 135°F normal temperature, 150°F maximum temperature, and 90% maximum humidity. Design normal gamma plus neutron radiation dose over a five year maintenance period is 7.4 MRad. The installed life of seals, gaskets and the hydraulic fluid in the actuator and controls is controlled by the environmental qualification program described in USAR 3.11. The inside valves are not continuously exposed to maximum conditions, particularly during reactor shutdown, and valves outside the primary containment and shielding are in ambient conditions that are considerably less severe.

The main steam line isolation valves are designed to close under accident environmental conditions of 330°F for one hour at drywell pressures of 30 psig maximum and -14 psig minimum. In addition, they are designed to remain closed under the following post-accident environment conditions:

(1) 330°F for an additional 2 hours at drywell pressure of 15 psig maximum

(2) 310°F for an additional 3 hours at 15 psig maximum

(3) 250°F for an additional 18 hours at 15 psig maximum

(4) 250° to 100°F ramp during the next 99 days at 15 psig maximum

To resist sufficiently the response motion from the safe shutdown earthquake, the main steam line valve installations are designed as Seismic Category I equipment. The valve assembly is manufactured to withstand the safe shutdown earthquake forces applied at the mass center of the extended mass of the valve operator, assuming the cylinder/spring operator is cantilevered from the valve body and the valve is located in a horizontal run of pipe. The stresses caused by horizontal and vertical seismic forces are assumed to act simultaneously. The stresses in the actuator supports caused by seismic loads are combined with the stresses caused by normal operating loads. The allowable stress for this combination of loads is based on a percentage of the allowable yield stress for the material. The parts of the main steam isolation valves that constitute a process fluid pressure boundary are designed, fabricated, inspected, and tested as required by the ASME Code, Section III.

5.4.5.3 Safety Evaluation

In a direct cycle nuclear power plant the reactor steam goes to the turbine and to other equipment outside the containment. Radioactive materials in the steam are released to the environs through process openings in the steam system or escape from accidental openings. A large break in the steam system can drain the water from the reactor core faster than it is replaced by feedwater.

The analysis of a complete, sudden steam line break outside the containment is described in Chapter 15, "Accident Analyses". The analysis shows that the fuel barrier is protected against loss of cooling if main steam isolation valve closure is within specified limits, including instrumentation delay to initiate valve closure after the break. The calculated radiological effects of the radioactive material assumed to be released with the steam are shown to be well within the guideline values for such an accident.

The shortest closing time (approximately 3 sec) of the main steam isolation valves is also shown in Chapter 15, to be satisfactory. The switches on the valves initiate reactor scram when specific conditions (extent of valve closure, number of pipe lines included, and reactor power level) are exceeded (see subsection 7.2.1). The pressure rise in the system from stored and decay heat may cause the nuclear system relief valves to open briefly, but the rise in fuel cladding temperature will be insignificant. No fuel damage results.

The ability of this 45-degree, Y-design globe valve to close in a few seconds after a steam line break, under conditions of high pressure differentials and fluid flows with fluid mixtures ranging from mostly steam to mostly water, has been demonstrated in a series of dynamic tests. A full-size, 20-inch valve was tested in a range of steam-water blowdown conditions simulating postulated accident conditions (Reference 2).

The following specified hydrostatic, leakage, and stroking tests, as a minimum, are performed by the valve manufacturer in shop tests:

(1) To verify its capability to close at settings between 3 and 10 sec, (Response time for full closure is set prior to plant operation at 3.0 sec minimum, 5.0 sec maximum) each valve was tested at 1000 psig line pressure and no flow. The valve was stroked several times, and the closing time is recorded. The valve is closed by spring only and by the combination of air cylinder and springs. The closing time is slightly greater when closure is by springs only.

(2) Leakage was measured with the valve seated and backseated. The specified maximum seat leakage, using cold water at design pressure, is 2 cm^3/hr/in. of nominal valve size. In addition, an air seat leakage test was conducted using 50 psig pressure upstream. Maximum permissible leakage is 0.1 scfh/in. of nominal valve size. There must be no visible leakage from either set of stem packing at hydrostatic test pressure. The valve stem is operated a minimum of three times from full open to full closed and return to the open position, and the packing leakage still must be zero by visual examination.

(3) Each valve was hydrostatically tested in accordance with the requirements of the applicable edition and addenda of the ASME Code. During valve fabrication, extensive nondestructive tests and examinations were conducted. Tests

included radiographic, liquid penetrant, or magnetic particle examinations of casting, forgings, welds, hardfacings, and bolts.

(4) The spring guides, the guiding of the spring seat member on support shafts, and rigid attachment of the seat member assure correct alignment of the actuating components. Binding of the valve poppet in the internal guides is prevented by making the poppet in the form of a cylinder longer than its diameter and by applying stem force near the bottom of the poppet.

After the valves were installed in the nuclear system, each valve was tested as discussed in Chapter 14.

Two isolation valves provide redundancy in each steam line so either can perform the isolation function, and either can be tested for leakage after the other is closed. The inside valve, the outside valve, and their respective control systems are separated physically.

The design of the isolation valve has been analyzed for earthquake loading. The cantilevered support of the air cylinder, hydraulic cylinder, springs, and controls is the key area. The increase in loading caused by the specified earthquake loading does not result in stresses exceeding material allowables, or prevent the valve from closing as required.

Electrical equipment that is associated with the isolation valves and operates in an accident environment is limited to the wiring, solenoid valves, and position switches on the isolation valves. The expected pressure and temperature transients following an accident are discussed in Chapter 15.

5.4.5.4 Inspection and Testing

The main steam isolation valves can be functionally tested for operability during plant operation and refueling outages. The test provisions are listed below. During refueling outage the main steam isolation valves can be functionally tested, leak-tested, and visually inspected.

The main steam isolation valves can be tested and exercised individually to the 90% open position, because the valves still pass rated steam flow when 90% open.

The main steam line isolation valves can also be tested and exercised individually to the fully closed position if reactor power is reduced sufficiently to avoid scram from reactor overpressure or high flow through the other steam line flow restrictors.

Leakage from the valve stem packing may be determined during reactor operation from measurements of leakage into the drywell, or from observations or similar measurements in the steam tunnel. During shutdown while the nuclear system is pressurized, the leak rate through the inner packing can be determined by measuring the amount of leakage collected over a specified time. Leakage through the inner packing would be collected from the packing drain line. Valves 1B21-F022A,B,C, and D and 1B21-F028A have been modified from a two set packing with lantern ring leak off line and have a live-loaded Chesterton packing without a leak off line. With these changes, stem leakage measurements cannot be performed for these valves.

Prior to plant startup following each refueling outage, the valves will receive the same pressure test and visual inspection, VT-2 that are imposed on the primary system by ASME Section XI code.

Such a test and leakage measurement program ensures that the valves are operating correctly and that any leakage trends can be detected.

5.4.6 Reactor Core Isolation Cooling System

5.4.6.1 Design Basis

The Reactor Core Isolation Cooling System is a Safety System which consists of a turbine, pump, piping, valves, accessories, and instrumentation designed to assure that sufficient reactor water inventory is maintained in the reactor vessel to permit adequate core cooling to take place. This prevents reactor fuel overheating during the following conditions:

(1) Should the vessel be isolated and maintained in the hot standby condition

(2) Should the vessel be isolated and accompanied by loss of coolant flow from the reactor feedwater system

(3) Should a complete plant shutdown under conditions of loss of normal feedwater system be started before the reactor is depressurized to a level where the shutdown coolant system can be placed into operation

(4) Should a design basis control rod drop accident occur, the RCIC system can be used in conjunction with the HPCS system and together with the latter meets single failure criteria in mitigating the consequences of this event. (The RCIC system is an Engineered Safety Feature for this event.)

Following a reactor scram, steam generation will continue at a reduced rate due to the core fission product decay heat. At this time the turbine bypass system will divert the steam to the main condenser, and the feedwater system will supply the make-up water required to maintain reactor vessel inventory.

In the event the reactor vessel is isolated, and the feedwater supply unavailable, relief valves are provided to automatically (or remote manually) maintain vessel pressure within desirable limits. The water level in the reactor vessel will drop due to continued steam generation by decay heat. Upon reaching a predetermined low level, the RCIC System shall be initiated automatically. The turbine driven pump will supply demineralized make-up water from the RCIC storage tank to the reactor vessel; an automatic, safety-grade switchover to a Seismic Category I supply (i.e., the suppression pool) has been provided as a convenience to the operator. The turbine will be driven with a portion of the decay heat steam from the reactor vessel, and will exhaust to the suppression pool. Suppression pool water is not usually demineralized and hence should only be used in the event all sources of demineralized water have been exhausted.

During RCIC operation, the suppression pool shall act as the heat sink for steam generated by reactor decay heat. This will result in a rise in pool water temperature. Heat exchangers shown in the Residual Heat Removal System (RHR) are used to maintain pool water temperature within acceptable limits by cooling the pool water directly.

5.4.6.1.1 Residual Heat and Isolation

5.4.6.1.1.1 Residual Heat

The RCIC system shall initiate and discharge, within 30 seconds, a specified constant flow into the reactor vessel over a specified pressure range. The RCIC water discharged into the reactor vessel varies between a temperature of 40°F up to and including a temperature of 140°F. The mixture of the cool RCIC water and the hot steam does the following:

(1) Quenches the steam.

(2) Removes reactor residual heat.

(3) Replenishes reactor vessel inventory.

Redundantly the HPCS system performs the same function, hence, providing single failure protection. Both systems use different electrical power sources of high reliability, which permit operation with either on site power or offsite power. Additionally, the RHR system performs a residual heat removal function.

The RCIC system design includes interfaces with redundant leak detection devices, namely:

(1) A high pressure drop across a flow device in the steam supply line equivalent to 298 percent of the steady state steam flow at 1215 psia.

(2) A high area temperature, utilizing temperature switches as described in the leak detection system. High area temperature shall be alarmed in the control room.

(3) A low reactor pressure of 50 psig minimum.

(4) A high pressure between the turbine exhaust rupture diaphragms.

These devices, activated by the redundant power supplies, automatically isolate the steam supply to the RCIC turbine.

Other isolation bases are defined in 5.4.6.1.1.2. HPCS provides redundancy for RCIC should RCIC become isolated, hence, providing single failure protection.

5.4.6.1.1.2 Isolation

Isolation valve arrangements include the following:

(1) Two RCIC lines penetrate the reactor coolant pressure boundary. The first is the RCIC steam line which branches off one of the main steam lines between the reactor vessel and the main steam isolation valve. This line has two automatic motor operated isolation valves. One is located inside and the other outside the drywell. An automatic motor operated inboard RCIC isolation bypass valve is used. The isolation signals noted earlier close these valves.

The isolation signal is automatic and bypasses the keylock when the valves must be closed in the case of an RCIC line break. For other accidents it is more desirable to have steam available for RCIC operation than to preclude its

operation because of a containment automatic isolation valve closure signal. If the isolation valves were closed, operator action would be required to reopen the valves to avoid water hammer and thermal shock. An isolation signal is given for a large pipe break by detecting flow rates greater than 298% of the steady-state steam flow. For leakage with flow rates less than 298% of steady-state steam flow, RCIC equipment room isolation signal is signaled by use of area temperature sensors provided by the leak detection system.

If the steam isolation valves were temporarily closed for maintenance, operating procedures provide specific directions on opening the steam isolation valves and the warmup line. This administrative control relieves the possibility of thermal shock or water hammer to the steam line, valve seat, and disks. Keylock switches on the steam isolation valves provide positive administrative control of the opening procedures.

(2) The RCIC pump discharge line is the other line that penetrates the reactor vessel. This line has two check valves (one inside the drywell and the other outside the drywell). Additionally, an automatic motor operated valve is located outside the drywell.

(3) The RCIC turbine exhaust line vacuum breaker system line has two automatic motor operated valves and two check valves. This line runs between the suppression pool air space and the turbine exhaust line downstream from the exhaust line check valve. Positive isolation shall be automatic via a combination of low reactor pressure and high drywell pressure.

The vacuum breaker valve complex is placed outside the drywell due to a more desirable environment. In addition, the valves are readily accessible for maintenance and testing.

(4) The RCIC pump suction line from the suppression pool, minimum flow pump discharge line, and turbine exhaust line all penetrate the containment and are submerged in the suppression pool. The isolation valves for these lines are all outside the containment and require remote-manual operation.

5.4.6.1.2 Reliability, Operability, and Manual Operation

5.4.6.1.2.1. Reliability and Operability (Also see Subsection 5.4.6.2.4)

The RCIC System as noted in Table 3.2-1 is designed commensurate with the safety importance of the system and its equipment. Each component is individually tested to confirm compliance with system requirements. The system as a whole was tested during both the startup and pre-operational phases of the plant to set a base mark for system reliability. To confirm that the system maintains this mark, functional and operability testing is performed at predetermined intervals throughout the life of the reactor plant.

A design flow functional test of the RCIC system may be performed during normal plant operation by drawing suction from the RCIC storage tank and discharging through a full flow test return line to the RCIC storage tank. The discharge valve to the head cooling spray nozzle remains closed during the test, and reactor operation remains undisturbed. All components of the RCIC System (except 1E51-F066) are capable of individual functional testing during normal

plant operation. System control provides automatic return from test to operating mode if system initiation is required. There are three exceptions: 1. Auto/manual initiation on the flow controller. This feature is required for operator flexibility during system operation. 2. Steam inboard/outboard isolation valves. Closure of either or both of these valves requires operator action to properly sequence their opening. An alarm sounds when either of these valves leaves the fully open position. 3. Other bypassed or otherwise deliberately rendered inoperable parts of the system shall be automatically indicated in the control room at the system level.

5.4.6.1.2.2 Manual Operation (Also see subsections 5.4.6.2.5.2 and .3)

In addition to the automatic operational features, provisions are included for remote-manual startup, operation, and shutdown of the RCIC System, provided initiation or shutdown signals do not exist.

5.4.6.1.3 Loss of Offsite Power

The RCIC System power is to be derived from a highly reliable source that is maintained by either onsite or offsite power. (Refer to subsection 5.4.6.1.1)

5.4.6.1.4 Physical Damage

The system is designed to the requirements of Table 3.2-1 commensurate with the safety importance of the system and its equipment. The RCIC pump is located in the Auxiliary Building, physically separated from the redundant HPCS pump which is located in the Fuel Building, and utilizes different divisional power (and separate electrical routings) than its redundant system as discussed in subsections 5.4.6.1.1 and 5.4.6.2.4. The RCIC piping and components located outside the Containment Building are protected from internally and externally generated missiles by Seismic Category I structures including pump room walls. The piping between the RCIC Storage Tank and the Fuel Building are not provided with protection in accordance with Section 3.5.2.4.

5.4.6.1.5 Environment

The system operates for the time intervals and the environmental conditions specified in section 3.11.

5.4.6.2 System Design

5.4.6.2.1 General

5.4.6.2.1.1 Description

A summary discription of the Reactor Core Isolation Cooling System is presented in subsection 5.4.6.1 which defines in general the system functions and components. The detailed description of the system, its components and operation is presented in the following sections of 5.4.6.2.

5.4.6.2.1.2 Diagrams

The following diagrams are included for the RCIC Systems.

(1) A schematic "Piping and Instrumentation Diagram" (Drawing M05-1079) shows all components, piping, points where interface system and subsystems tie together, and instrumentation and controls associated with subsystem and component actuation.

(2) A schematic "Process Diagram" (Drawing 762E421AA) shows temperature, pressures, and flows for RCIC operation and system process data hydraulic requirements.

5.4.6.2.1.3 Interlocks

The following defines the various electrical interlocks:

(1) There are three key locked valves namely F063, F064, and F068 and two key locked resets namely the "Isolation Resets".

(2) F031's limit switch activates when not fully closed and closes F010, F022, and F059.

(3) F068's limit switch activates when full open and clears F045 permissive so F045 could open.

(4) F045's limit switch activates when F045 is not fully closed and energizes a 25 sec time delay and also initiates startup ramp function. This ramp resets each time F045 is closed.

The 25 second time delay inhibits the following alarms from actuating during the first 15 seconds following opening of F045:

(a) RCIC pump discharge flow low

(b) RCIC turbine bearing oil pressure low

(c) RCIC gland seal air pressure low.

These parameters read low while the system is on standby. The time delay allows these conditions to clear on system startup before they can alarm. This prevents an unwanted alarm condition while the system is on standby.

(5) F045's limit switch activates when fully closed and permits F004, F005, F025 and F026 to open and closes F013 and F019.

(6) The turbine trip throttle valve (part of C002) limit switch activates when fully closed and closes F013 and F019.

(7) The combined pressure switches at reactor low pressure and high drywell pressure when activated close F077 and F078.

(8) High turbine exhaust pressure, low pump suction pressure, or an isolation signal actuates and closes the turbine trip throttle valve. When signal is cleared, the trip throttle valve must be reset from control room.

A high water level signal (with F045 open) causes closure of steam supply valve F045, not a closure of the turbine trip and throttle valve. The system will then restart automatically on a subsequent Level 2 signal.

(9) 120% overspeed trips both the mechanical trip at the turbine and the trip throttle valve. The former is reset at the turbine and then the latter is reset in the control room.

(10) An isolation signal closes F031, F063, F064, F076 and other valves as noted above in items 6 and 8.

(11) An initiation signal opens F010 if closed, then 6 seconds later F045 and F013; starts gland seal system; and closes F022 and F059 if open.

(12) High and low inlet RCIC steam line drain pot levels, respectively, open and close F054.

(13) The combined signals of low flow plus pump discharge pressure open and with increased flow close F019. Also see items 5 and 6 above.

(14) To prevent moisture ingestion into the main and feedwater turbines during RCIC operation, initiation of the RCIC system shall send a trip signal to the main turbine and the feedwater pump turbines. The trip signal shall be activated any time both the RCIC injection valve is not fully closed and the RCIC pump discharge flow is greater than the minimum flow setpoint.

5.4.6.2.2 Equipment and Component Description

5.4.6.2.2.1 Design Conditions

Operating parameters for the components of the RCIC System, defined below, are shown on Drawing 762E421AA. The RCIC components are:

(1) One 100% capacity turbine and accessories

(2) One 100% capacity pump assembly and accessories

(3) Piping, valves, and instrumentation for:

a. Steam supply to the turbine

b. Turbine exhaust to the suppression pool

c. Make-up supply from the RCIC storage tank to the pump suction

d. Make-up supply from the suppression pool to the pump suction

e. Pump discharge to the head cooling spray nozzle, including a test line to the condensate storage tank, a minimum flow bypass line to the suppression pool, and a coolant water supply to accessory equipment.

The basis for the design conditions is the American Society of Mechanical Engineers (ASME) Section III, Nuclear Power Plant Components.

5.4.6.2.2.2 Design Parameters

Design parameters for the RCIC system components are listed below. See Table 5.4-5 for historical valve information. Specific valve capability requirements are documented in Reference (3) and Reference (4). See Drawing M05-1079 for cross-reference of component numbers listed below:

(1) RCIC Pump Operation
1E51C001

Flow Rate	Injection Flow - 600 gpm

(2) RCIC Turbine Operation
1E51C002

Reactor Pressure	H. P. Condition	L. P. Condition
(Sat. Temp.)	1215 psia	165 psia
Steam Inlet Pressure	1200 psia, minimum	150 psia, minimum

(3) RCIC Orifice Sizing

Minimum Flow Orifice 1E51D005	Sized for design flow through the bypass line. Operation of the RCIC pump under these conditions is limited to less than 20 seconds in order to prevent potential degradation of the pump internal parts.
Test Return Orifice 1E51D006	Sized with piping arrangement to simulate pump discharge pressure required when the RCIC System is injecting design flow with the reactor vessel pressure. Valve 1E51F022 must be throttled for system testing at a simulated reactor pressure.
Water Leg Pump Minimum Flow Orifice 1E51D011	Sized for minimum water leg pump flow and located in a pipe run of sufficient length to act as a heat sink thus permitting continuous water leg pump operation without pump overheating.

Cooling Loop Back Pressure Orifice 1E51D012	Sized to maintain design flow through the lube oil cooler.

(4) Valve Operation Requirements

Steam Supply Valve 1E51F045	Open and/or close against full differential pressure within time requirements that support RCIC System functions. The 1E51-F045 hydraulic profile versus time ensures that the governor valve returns turbine speed control to the idle setting subsequent to initial peak turbine speed. 1E51F045 must be capable of opening at a rate sufficient to allow the RCIC System to meet its start-up time requirements (i.e. time from receipt of an initiation signal to when the RCIC System delivers rated flow). Valve opens with time delay to provide the main steam flow path for RCIC turbine operation and closes to isolate the steam flow path when it is no longer required.
Pump Discharge Valve 1E51F013	Open and/or close against differential pressures within time requirements that support RCIC System functions. 1E51F013 must be capable of opening at a rate sufficient to allow the RCIC System to meet its start-up time requirements (i.e. time from receipt of an initiation signal to when the RCIC System delivers rated flow). Valve opens to provide the flow path from the RCIC pump to the reactor, and closes when the flow path is no longer required or may be closed to provide containment isolation.
Pump Minimum Flow Bypass Valve 1E51F019	Open and/or close against differential pressures within time requirements that support RCIC System functions. Valve opens to provide the minimum flow path for the RCIC pump, and closes when the path is no longer required or may be closed to provide containment isolation.
RCIC Steam Supply Isolation Valves 1E51F063 & 1E51F064	Open and/or close against differential pressure within time requirements that support RCIC System functions. Valves are open to provide steam flow to the RCIC steam supply line, and close for containment isolation.
Cooling Water Pressure Control Valve 1E51F015	Self-contained downstream sensing control valve capable of maintaining constant downstream pressure. Diaphragm of pressure control valve must be of the elastomer type.

Cooling Water Relief Valve 1E51F018	Sized to prevent over pressurizing piping, valves and equipment in the coolant loop in the event of failure of pressure control valve 1E51F015
Pump Test Return Valve 1E51F022	Capable of throttling flow and closing against differential pressures to facilitate pump testing. Valve is opened to provide flow path from the RCIC pump to the RCIC storage tank, and closed when path is no longer needed.
Pump Suction Valve, Suppression Pool 1E51F031	Capable of opening and closing against differential pressures that support RCIC System functions. Valve is opened to provide suppression pool as the suction source for the RCIC pump, and closed to isolate suppression pool when the RCIC storage tank in the suction source or for containment isolation.
Check Valve 1E51F066	System test mode bypasses this valve, and its functional capability is demonstrated separately. The valve is capable of proper functional operation during maximum ambient conditions.
Outboard Check Valve 1E51F065	Is accessible during plant operation and is capable of local testing.
Turbine Exhaust Valve 1E51F068	Open and/or close against differential pressures that support RCIC System functions. Physically located in the line on a horizontal run, as close to the containment as practical. Valve is opened to provide exhaust path to the suppression pool for RCIC turbine steam, and may be closed for containment isolation.
Isolation Valve, Steam Line 1E51F076	Open and/or close against differential pressures that support RCIC System functions. Valve is opened to provide warm-up steam to the RCIC steam supply line, and closed for containment isolation.
Vacuum Breaker Isolation Valve 1E51F077	Open and/or close against differential pressures that support RCIC System functions. Valve is open to allow vent path from drywell atmosphere to RCIC turbine exhaust, and closed for containment isolation.

	Vacuum Breaker Isolation Valve 1E51F078	Open and/or close against differential pressures that support RCIC System functions. Valve is open to allow vent path from drywell atmosphere to RCIC turbine exhaust, and closed for containment isolation.
	Vacuum Breaker Check Valves 1E51F079 & 1E51F081	Full flow and open with a minimum pressure drop across them.
	Steam Exhaust Drain Pot System Isolation Valves 1E51F004 & 1E51F005	These valves operate only when RCIC system is shut down. They allow drainage to the radwaste system via the Floor and Equipment Drain System.
	RCIC Storage Tank Isolation Valve 1E51F010	Valve must operate against differential pressures that support RCIC System functions. Valve is opened to provide RCIC storage tank as the suction source for the RCIC pump, and closed to isolate the RCIC storage tank when the suppression pool is suction source.
	Steam Inlet Drain Pot System Isolation Valves 1E51F025 & 1E51F026	These valves allow for draining of the steam inlet drain pot to the main condenser.
	Steam Inlet Trap Bypass Valve 1E51F054	This valve bypasses the trap 1E51D003. Valve is open when condensate drain pot level is high and closed to provide condensate return through 1E51D003.
	Cooling Loop Shut Off Valve 1E51F046	Valve must operate against differential pressures that support RCIC System functions. This valve allows water to be passed through the auxiliary equipment coolant loop.
	Pump Test Return Valve 1E51F059	Valve must operate against differential pressures to facilitate pump testing. Valve is opened to provide flow path from the RCIC pump to the RCIC storage tank, and closed when path is no longer needed.
	Thermal Relief Valve 1E51F090	Size as required to protect the discharge line between valves 1E51F022 and 1E51F059 from thermal expansion due to abnormal ambient temperature.
(5)	Rupture Disc Assemblies 1E51D001 & 1E51D002	Utilitized for turbine casing protection, includes a mated vacuum support to prevent rupture disc reversing under vacuum conditions.

(6) Instrumentation

For instrumentation and control definition refer to Chapter 7.

(7) Condensate Storage Requirements

Total reserve storage for RCIC and HPCS system is 125,000 gallons.

(8) Piping RCIC Water Temperature

The maximum water temperature range for continuous system operation shall not exceed 140°F. However, due to potential short term operation at higher temperatures, piping expansion calculations were based on 170°F.

(9) Ambient Conditions

See Table 3.11-5

(10) Suction Strainer Sizing

The suppression pool suction strainer shall be sized such that;

a. Pump NPSH requirements are satisfied when strainer is fully loaded (i.e., conservatively specified debris loading resulting from LOCA-generated and pre-LOCA debris materials).

b. Particles over 3/32 inch diameter are restrained from passage into the pump and the head spray nozzles (refer to GE supplied components),

5.4.6.2.3 Applicable Codes and Classification

The RCIC system components within the drywell up to and including the outer isolation valve are designed in accordance with ASME Code, Section III, Class 1, Nuclear Power Plant Components. The RCIC System is also designed as Seismic Category I.

The RCIC System is not required to conform with General Design Criterion 34. The RCIC System is an engineered safety feature for the purpose of maintaining reactor vessel water inventory, and this system is not designed to meet the single failure criterion. Compliance with General Design Criteria 55 and 56 is presented in Subsections 6.2.4.3.2.1.1.5, 6.2.4.3.2.1.2.1, 6.2.4.3.2.1.3, 6.2.4.3.2.2.1.2, and 6.2.4.3.2.2.4. There are no RCIC lines for which General Design Criterion 57 is applicable. (Q&R 5.2)

The reactor core isolation cooling system component classifications and those for the RCIC storage system are given in Table 3.2-1.

5.4.6.2.4 System Reliability Considerations

To assure that the RCIC will operate when necessary and in time to prevent inadequate core cooling, the power supply for the system is taken from immediately available energy sources of high reliability. Added assurance is given in the capability for periodic testing during station operation. Evaluation of reliability of the instrumentation for the RCIC shows that no failure of a single initiating sensor either prevents or falsely starts the system.

As a result of the evaluations performed in response to GL 95-07, the RCIC Injection Valve was modified to address pressure locking concerns.

In order to assure HPCS or RCIC availability for the operational events noted previously, certain design considerations are utilized in design of both systems.

(1) Physical Independence. The two systems are located in separate areas. Piping runs are separated (in the Fuel Building, Auxiliary Building, and Containment) and the water delivered from each system enters the reactor vessel via different nozzles.

(2) Prime Mover Diversity and Independence. Prime mover independence is achieved by using a steam turbine to drive the RCIC pump and an electric motor driven pump for the HPCS system. The HPCS motor is supplied from either normal a-c power or a separate diesel generator.

(3) Control Independence. Control independence is secured by using different battery systems to provide control power to each unit. Separate detection initiation logics are also used for each system.

(4) Environmental Independence. Both systems are designed to meet requirements. Refer to Section 6.3.1.1.4. The HPCS and RCIC are Safety Class 2 systems with the following exceptions: those portions which are part of the reactor pressure boundary are Safety Class 1, and the suction strainers and the test return piping to the RCIC Storage Tank beyond the second isolation valve which are Safety Class-Other. Environment in the equipment rooms is maintained by separate auxiliary systems.

(5) Periodic Testing. A design flow functional test of the RCIC can be performed during plant operation by taking suction from the RCIC storage tank and discharging through the full flow test return line back to the RCIC storage tank. The discharge valve to the head-spray line remains closed during the test, and reactor operation is undisturbed. All components of the RCIC System (except 1E51-F066) are capable of individual functional testing during normal plant operation. Control system design provides automatic return from test to operating mode if system initiation is required. The three exceptions are as follows:

a. The auto/manual station on the flow controller. This feature is required for operator flexibility during system operation.

b. Steam inboard/outboard isolation valves. Closure of either or both of these valves requires operator action to properly sequence their opening. An alarm sounds when either of these valves leaves the fully open position.

c. Bypassed or other deliberately rendered inoperable parts of the system shall be automatically indicated in the control room.

Additionally, all components of the RCIC system (except 1E51-F066) shall be capable of individual functional testing during normal plant operation.

(6) General periodic inspections and maintenance of the turbine-pump unit are conducted in accordance with manufacturers' instructions, recommendations, plant operating experience, and good engineering practice. Valve position indication and instrumentation alarms are displayed in the control room.

5.4.6.2.5 System Operation

Manual actions required for the various modes of RCIC are defined below. Caution: System and hardware operating and maintenance instruction documents should be read and understood before any operation is started. Operating precautions shall be observed during operation.

5.4.6.2.5.1 Automatic Operation

Automatic startup of the RCIC system due to an initiation signal from reactor low water level requires no operator action. To permit this automatic operation, the operator must verify that the following steps have been taken to align the system for the standby mode:

(1) Verify water is available in the RCIC storage tank.

(2) Verify oil is available in RCIC turbine oil reservoir; and the turbine and pump are ready to run as defined by the technical documents for the turbine and pump.

(3) Verify power is available to all components.

(4) Verify manual valves are positioned correctly and administratively controlled. This verification requires one operator to be out of the control room. Administrative control will minimize subsequent checks.

(5) Verify that the RCIC turbine exhaust line isolation valve and vacuum breaker valves are open.

(6) Verify water leg pump is running. If essential power to the water leg pump fails, the RCIC system pump can be started up as defined in paragraph 5.4.6.2.5 and run until the power is restored.

(7) Verify the flow controller has the correct flow set point and is in the automatic mode.

(8) Verify that the two isolation signal logic “reset” devices have been reset.

(9) Verify that the two RCIC steam isolation valves have been properly sequenced open.

(10) Verify that the turbine trip throttle valve, part of C002, is in the full open position. If not fully open, the valve may need to be reset.

There are two trips for the turbine namely a solenoid operated trip and a mechanical overspeed trip. The overspeed trip must be reset out of the control room at the turbine itself. Once the overspeed trip is reset or if only a solenoid trip occurred, the trip throttle valve shall be reset. See Drawing M05-1079 for component identification.

During extended periods of operation and when the normal water level is again reached, the HPCS system may be manually tripped and the RCIC system flow controller may be adjusted and switched to manual operation. This prevents unnecessary cycling of the two systems. Subsequent starts of RCIC turbine and pump must be operator controlled until rated flow is reached by use of the trip throttle valve or manually initiated if F045 is first closed. Note: Should RCIC flow be inadequate HPCS flow will automatically come on again.

Further steps describe actions during operation and shutdown.

(11) Adjust flow controller set point as required to maintain desired reactor water level.

(12) When RCIC operation is no longer required, manually trip the RCIC system.

(13) Close the steam supply valve F045.

(14) Verify that valves F004, F025, and F026 reopen automatically after valve F045 was closed. Note: Valve F005 is normally closed and opens as required by signal from the turbine exhaust drain pot level switch.

(15) Verify shut valves F013 and F019.

(16) Reset the turbine trip throttle valve.

(17) Stop the Gland Seal System.

(18) Close the cooling water supply valve F046.

(19) Turn the flow controller back to automatic.

(20) Verify system is in the standby configuration per Drawing M05-1079.

5.4.6.2.5.2 Test Loop Operation

This operating mode is manually initiated by the operator. Operator action is required as defined below:

(1) Verification made in steps 1 through 10 of paragraph 5.4.6.2.5.1 shall be completed.

(2) All motor operated valves shall be positioned as shown on Drawing M05-1079.

(3) Start Gland Seal system.

(4) Open F046.

(5) Open F059 fully.

(6) Start RCIC Turbine by opening F045.

(7) Adjust F022 to obtain a pump flow of 600-610 gpm.

(8) Verify that valves F004, F005, F025 and F026 automatically closed after valve F045 opened.

(9) Observe turbine RPM on speed indicator.

(10) Turn RMS switch for F019 to open position and release. Observe that valve F019 cycles fully open and closed by watching position lights. Also observe turbine speed indicator to verify speed increases during this cycling. If speed increases it confirms that the minimum flow line valves and electrical logic properly function.

(11) Further adjust F022 to simulate reactor pressure plus line losses to reactor pressure at time of test or actual line pressure drop to reactor (if available) plus reactor pressure.

(12) While turbine is running, check and record the following:

a. Pump Suction Pressure

b. Pump Discharge Pressure

c. Turbine Steam Exhaust Pressure

d. Turbine Steam Inlet Pressure

e. Pump Flow

f. Turbine Speed

(13) When the test is completed, manually trip the turbine.

(14) Close the test valve F059 to RCIC storage tank.

(15) Close redundant shut off valve F022 to RCIC storage tank.

(16) Follow steps 13 through 20 of paragraph 5.4.6.2.5.1.

5.4.6.2.5.3 Steam Condensing (Hot Standby) Operation

This manual mode of operation is permanently out of service.

5.4.6.2.5.4 Limiting Single Failure

The most limiting single failure with the RCIC System and its HPCS backup system is the failure of HPCS. With an HPCS failure, if the capacity of RCIC System is adequate to maintain reactor water level, the operator follows paragraph 5.4.6.2.5.1. If however, the RCIC capacity is inadequate paragraph 5.4.6.2.5.1 still applies, but additionally the operator may also initiate the ADS system described in subsection 6.3.2.

5.4.6.3 Performance Evaluation

The analytical methods and assumptions in evaluating the RCIC system are presented in Chapter 15, "Accident Analyses," and Appendix A to Chapter 15, "Plant Nuclear Safety Operational Analyses." The RCIC system provides the flows required from the analysis (see Drawing 762E421AA) within a 30 second interval based upon considerations noted in 5.4.6.2.4.

5.4.6.4 Preoperational Testing

The preoperational and initial startup test program for the RCIC system is presented in Chapter 14, "Initial Test Program".

5.4.7 Residual Heat Removal System

5.4.7.1 Design Bases

The RHR system is comprised of three independent loops. Each loop contains its own motor-driven pump, piping, valves, instrumentation and controls. Each loop has a suction source from the suppression pool and is capable of discharging water to the reactor vessel via a separate nozzle, or back to the suppression pool via a full flow test line. In addition, the A and B loops have heat exchangers which are cooled by emergency service water. Loops A and B can also take suction from the reactor recirculation system suction, and can discharge into the reactor via the feedwater line, or to the containment spray spargers. The A and B loops are connected to the feedwater system and have the capability to create a water seal on the feedwater system containment isolation check valves. The A loop can also take suction from the fuel pool cooling system surge tanks and return to the fuel pools for supplementing the fuel pool cooling capacity when required.

5.4.7.1.1 Functional Design Basis

The RHR system has six subsystems, each of which has its own functional requirements. Each subsystem shall be discussed separately to provide clarity.

5.4.7.1.1.1 Residual Heat Removal Mode (Shutdown Cooling Mode)

(1) The functional design basis of the shutdown cooling mode is to have the capability to remove decay and sensible heat from the reactor primary system so that the reactor outlet temperature is reduced to 125°F, 20 hours after the control rods have been inserted, to permit refueling when the maximum service water temperature is 85°F, the core is "mature" and the tubes are completely fouled. (See section 5.4.7.2.2 for exchanger design details.) The capacity of the heat exchangers is such that the time to reduce the vessel outlet water temperature to 212°F corresponds to a cooldown rate of 100°F per hour with both loops in service. However, the flushing operation associated with shutdown prevents attaining 212°F coolant temperature at the minimum time.

If 2 hours are used for flushing, the minimum time required to reduce vessel coolant temperature to 212°F is depicted by Figure 5.4-11.

(2) The design basis for the most limiting single failure for the RHR system (Shutdown Cooling Mode) is that one exchanger loop is lost and the plant is then

shutdown using the capacity of a single RHR heat exchanger and related service water capability. Figure 5.4-12 shows a representative cooldown profile.

(3) If the non-safety-grade main condenser is not available for reactor shutdown, the safety-grade safety/relief valves are used to depressurize the reactor to 96.5 psig (nominal) while the safety-grade RCIC system supplies makeup water. Below 96.5 psig (nominal), the safety-grade RHR shutdown cooling mode is used to continue the reactor shutdown to the cold shutdown condition.

The RHR provides a means for bringing the reactor to cold shutdown using only safety-grade systems.

5.4.7.1.1.2 Low Pressure Injection (LPCI) Mode

The functional design basis for the LPCI mode is to pump a total of 5050 gpm of water per loop using the separate pump loops from the suppression pool into the core region of the vessel, when the vessel pressure is 20 psid over drywell pressure. Injection flow commences at 225 psid vessel pressure above drywell pressure.

The Feedwater Leakage Control (FWLC) mode may be required to operate simultaneously with this mode of operation.

5.4.7.1.1.3 Suppression Pool Cooling Mode

The functional design basis for the suppression pool cooling mode is that it shall have the capacity to ensure that the suppression pool temperature immediately after a blowdown shall not exceed 170°F. The Feedwater Leakage Control (FWLC) mode may be required to operate simultaneously with this mode of operation.

5.4.7.1.1.4 Containment Spray Cooling Mode

The functional design basis for the containment spray cooling mode is that there should be two redundant means to spray into the containment and suppression pool vapor space to reduce internal pressure to below design limits with bypass leakage from all leakage paths from drywell to containment on the order of 1.0 ft^2, $A/\sqrt{K}$. The Feedwater Leakage Control (FWLC) mode may be required to operate simultaneously with this mode of operation.

5.4.7.1.1.5 Reactor Steam Condensing Mode – Not Available

5.4.7.1.1.6 Feedwater Leakage Control Mode (FWLC)

The functional design basis for the FWLC mode is to create a water seal at the outboard feedwater isolation check valves (1B21-F032A/B) and gate valves (1B21-F065A/B) within one hour following a DBA LOCA and maintain the seal for a 30 day period.

The feedwater fill operation will begin approximately 20 minutes after initiation of the DBA LOCA by remote manual operation. The subsystem is designed to divert flow from the RHR LPCI, Suppression Pool Cooling and Containment Spray Modes without reducing flows in those modes below the modes functional design basis.

The following design bases also apply to FWLC:

5.4.7.1.1.6.1 The FWLC is designed in accordance with seismic category I and quality group B requirements to comply with Regulatory Guides 1.26 and 1.29. The subsystem meets the intent of Regulatory Guide 1.96, where applicable.

5.4.7.1.1.6.2 The FWLC is designed with sufficient redundancy, separation, reliability and capacity as a safety related system consistent with the need to maintain containment integrity for as long as postulated LOCA conditions require.

5.4.7.1.1.6.3 The FWLC is capable of performing its safety function following a loss of all offsite power consistent with a design basis LOCA.

5.4.7.1.1.6.4 The FWLC is designed with sufficient capacity and capability to prevent leakage through the feedwater lines consistent with containment integrity under the conditions associated with the postulated design basis LOCA.

5.4.7.1.1.6.5 The FWLC is provided with interlocks actuated from appropriately designed safety systems or circuits to prevent inadvertent system operation.

5.4.7.1.1.6.6 The FWLC is designed to permit functional testing of the system during plant shutdowns.

5.4.7.1.1.6.7 The FWLC is designed so that effects resulting from a system single active component failure will not affect the integrity of the feedwater lines or the operability of containment isolation valves.

5.4.7.1.1.6.8 The FWLC is protected from the effects of internally generated missiles, postulated pipe breaks, and environmental conditions associated with a LOCA.

5.4.7.1.2 Design Basis for Isolation of RHR System from Reactor Coolant System

The low pressure portions of the RHR system are isolated from full reactor pressure whenever the primary system pressure is above the RHR system design pressure. See Subsection 5.4.7.1.3 for further details. In addition, automatic isolation may occur for reasons of vessel water inventory retention which is unrelated to line pressure rating. (See Subsection 5.2.5 for an explanation of the Leak Detection System and the isolation signals.)

The RHR pumps are protected against damage from a closed discharge valve by means of automatic minimum flow valves, which open on low main line flow and close on high main line flow.

The minimum flow valve opens at main line flows less than the minimum flow setpoint; this allows flow to return to the suppression pool through the low-resistance, low-flow bypass line which branches off the main line upstream of the flow element. The minimum flow valve closes at main line flows greater than the minimum flow reset point; this closes the low-resistance, low-flow bypass to the suppression pool and forces the entire pump discharge flow through the main line.

The minimum flow valve controls meet IEEE 279 requirements on the ECCS network level.

The minimum flow line restricting orifice is Quality Group B (i.e., seismic Category I, ASME Code, Section III).

RHR pump damage due to high runout flows during ECCS modes is prevented as follows:

a. The LPCI injection piping has a restricting orifice (D004) to prevent excessively high runout flow rates.

b. The containment spray piping has higher frictional losses and elevational requirements than the LPCI injection piping; therefore, RHR flow to containment spray will always be less than the above LPCI injection flow rate and, as a result, an acceptable runout flow rate.

RHR pump damage due to high runout flows during testing is prevented by the system resistance's described above and by operator action as needed.

5.4.7.1.3 Design Basis for Pressure Relief Capacity

The relief valves in the RHR system are sized on one of three bases:

(1) Thermal relief only

(2) Valve bypass leakage only

(3) Control valve failure and the subsequent uncontrolled flow.

Relief valve capacity, nominal setpoints, and ASME class ratings are provided in Drawing M05-1075.

Transients are treated by items (1) and (3); item (2) above has resulted from an excessive leak past isolation valves. Relief valve E12-F055 is shut by raising the relief setpoint. E12-F055 was originally installed to be the RHR heat exchanger steam supply relief valve which is no longer required with the elimination of the steam condensing mode. Relief valve E12-F112 now functions as the thermal relief valve for the RHR heat exchangers. E12-F036 was originally sized to maintain upstream pressure at 75 psig and 10 percent accumulation with both PCV E12-F065 A&B failed open. (Based on Steam Condensing Mode Operation). E12-F005, F017, F025, F030, and F101 shall be set at the design pressure specified in the process data drawing plus 10 percent accumulation.

Redundant interlocks prevent opening valves to the low pressure suction piping when the reactor pressure is above the shutdown range. These same interlocks initiate valve closure on increasing reactor pressure. The pressure permissive set point to open RHR isolation valves F008 and F009 is 96.5 psig (nominal). The same set point initiates closure of F008 and F009 on increasing reactor pressure.

Thermal relief for the RHR piping between isolation valves F008 and F009 has been demonstrated to occur as the differential pressure across valve F009 forces the outboard disc away from its seat creating a flow path into the inner seat area of the valve and through the drain line toward the reactor.

The RHR system is connected to higher pressure piping at shutdown suction, shutdown return, LPCI injection, head spray, and FWLC injection. The vulnerability to overpressurization of each location is discussed in the following paragraphs.

Shutdown suction has two gate valves, F008 and F009, in series which have independent pressure interlocks to prevent opening at high inboard pressure for each valve. No single active failure nor operator error will result in overpressurization of the low pressure piping. In the event of leakage past F008 and F009, PT-N057 provides indication and alarm to the control room operator.

Overpressure protection for the shutdown cooling (SDC) suction header is provided by relief valve 1E12F005, with discharge routed to the suppression pool. If a leak is detected via PT-N057, a small capacity relief path can be placed in service. When in service, the leak-off line will provide a leakage path to the Division 2 water leg pump minimum flow line to prevent small leakage past containment isolation valves F008 and F009 from causing a high pressure alarm. In this configuration, PT-N057 will not alarm unless the leakage rate into the SDC suction header exceeds the flow through the leak-off line (approximately 2 gpm).

The shutdown return line has a swing check valve, F050, to protect it from higher vessel pressures. Additionally, a globe valve, F053, is located in series and has pressure interlock to prevent opening at high inboard pressures. These same interlocks initiate valve closure on increasing reactor pressure. No single active failure nor operator error will cause overpressurization of the lower pressure piping.

The LPCI injection line has a testable swing check valve, F041, to protect it from higher vessel pressure. No single active failure nor operator error will cause overpressurization of the lower pressure piping.

The head spray line has a swing check valve, F019, to protect it from higher vessel pressure. Additionally, a gate valve, F023, is located in series and has pressure interlocks to prevent opening at high inboard pressure. These same interlocks initiate valve closure on increasing reactor pressure. Note that F019 is not a reactor coolant system pressure isolation valve (RCS PIV). 1E51-F066, 1E51-F013, and 1E12-F023 are the RCS PIVs which provide leak-tight isolation of the head spray line. No single active failure nor operator error will cause overpressurization of the lower pressure piping.

The FWLC keep fill lines contain check valves, F495A/B and F499A/B, for protection from higher feedwater pressures. Additionally, motor operated globe valves F496 and F497 are located in series with the check valves and have pressure interlocks to prevent opening or to isolate on high inboard pressures. No single active failure nor operator error will cause overpressurization of the lower pressure piping.

5.4.7.1.3.1 <u>RHR System Relief With Respect to Operator Errors</u>

During plant startup the RHR system is not used and is therefore isolated from the RCS. There will be no operator interface with the RHR system during startup.

RHR pressure relief capacity is not sized on a basis of operator error during shutdown, since no operator error can lead to overpressurization of the low pressure piping. RHR low pressure piping is connected to the higher pressure RCS during normal shutdown at the shutdown suction from the recirculation loop, at the shutdown return to feedwater, at the FWLC injection to feedwater and at the RCIC head spray line. The pressure separation design of these lines is discussed in the following paragraphs.

a. RHR shutdown suction from the recirculation loop:

This line has an inside containment isolation valve and an outside containment isolation valve. Each valve is interlocked with a separate switch which prohibits opening of the associated valve if the recirculation loop pressure exceeds the shutdown range. These same interlocks initiate valve closure on increasing reactor pressure. An operator error cannot open either valve at a pressure above the shutdown range.

b. RHR shutdown return to feedwater and RHR connection to head spray:

These lines have a check valve and a globe valve at the pressure boundary. The check valve is not controlled by the operator, and therefore no operator error can open the valve and pressurize the low pressure piping. The globe valve has a pressure interlock which prevents opening of the valve due to operator error when the higher pressure system exceeds the shutdown range. These same interlocks initiate valve closure on increasing reactor pressure.

c. RHR FWLC keep fill to feedwater:

These lines have a check valve and a globe valve at the pressure boundary. The check valve is not controlled by the operator, and therefore no operator error can open the valve and pressurize the low pressure piping. The globe valve has a pressure interlock which prevents opening of the valve due to operator error when the feedwater pressure exceeds the maximum operating pressure of the RHR system. This same interlock initiates valve closure on increasing feedwater pressure.

5.4.7.1.4 Design Basis With Respect to General Design Criterion 5

The RHR system for this unit does not share equipment or structures with any other nuclear unit.

5.4.7.1.5 Design Basis for Reliability and Operability

The design basis for the Shutdown Cooling mode of the RHR system is that this mode is controlled by the operator from the control room. The only operations performed outside of the control room for a normal shutdown are identified in Section 5.4.7.2.6.

Two separate shutdown cooling loops are provided; and although both loops are required for shutdown under normal circumstances, the reactor coolant can be brought to 212°F in less than 20 hours with only one loop in operation. With the exception of the shutdown suction and shutdown return the entire RHR system is part of the ECCS and containment cooling systems, and is therefore required to be designed with redundancy, flooding protection, piping protection, power separation, etc. required of such systems. (See subsection 6.3 for an explanation of the design bases for ECCS systems). Shutdown suction and discharge valves are required to be powered from both offsite and standby emergency power for purposes of isolation and shutdown following a loss of offsite power. In the event either of the two shutdown supply valves fail to operate, an operator is sent out to operate the valve manually. If this is not feasible and the plant must be shutdown as soon as possible, the alternate shutdown method must be employed. In this procedure, water is drawn from the suppression pool, and delivered into the shroud region of the reactor. The vessel water is allowed to overflow the steam lines and discharges back to the suppression pool via the ADS valve discharge lines. The RHR system is then aligned in the suppression pool cooling mode. A complete loop is thereby established, with sensible and decay heat being transferred to the pool and then to service water via the RHR heat exchanger.

5.4.7.1.6 Design Basis for Protection from Physical Damage

The design bases for protection of the residual heat removal system from physical damage such as internally generated missiles, pipe break, and seismic effects, are discussed in Sections 3.5, 3.6, and 3.7, respectively.

5.4.7.2 Systems Design

5.4.7.2.1 System Diagrams

A11 of the components of the RHR system are shown in the P&ID, Drawing M05-1075. A description of the controls and instrumentation is presented in subsection 7.3.1.1 "Emergency Core Cooling Systems Control and Instrumentation".

Drawing 762E425AC is the RHR Process Diagram and Data. All of the sizing modes of the system are shown in the process data.

Interlocks are provided: (1) to prevent opening vessel suction valves above the suction line or the discharge line design pressure; (2) to prevent inadvertent opening of containment spray valves; (3) to prevent pump start when suction valve(s) are not open (this does not compromise the ECCS function further than loss of suction source to that loop); (4) to prevent opening the shutdown cooling suction valve (F006) and the suppression pool suction valve (F004) in the same loop at the same time; and (5) to prevent opening the full flow test return valve (F024) on a loop when the shutdown cooling suction valve (F006) in the same loop is open. A description of RHR system logic (i.e., interlocks, permissives) is presented in Table 5.4-3.

5.4.7.2.2 Equipment and Component Description

(1) System Main Pumps

The RHR main system pumps are motor-driven deepwell pumps with mechanical seals and cyclone separators. The motors are air cooled by the ventilating system. The pumps are sized on the basis of the LPCI mode (Mode A) and the minimum flow mode (Mode G) of process data in Drawing 762E425AC. Design pressure for the pump suction is 215 psig with a temperature range from 40 to 360°F. Design pressure for the pump discharge is 500 psig. The bases for the design temperature and pressure is maximum shutdown cut-in pressures and temperature, minimum ambient temperature, and maximum shutoff head. The pump pressure vessel is carbon steel, the shaft and impellers are stainless steel. A curve showing the required NPSH is included with the pump characteristic curves provided in Figure 5.4-15. Pump NPSH requirements are met by providing adequate suction head and suction line size. The calculated minimum available NPSH is obtained for pump A while taking suction from the suppression pool. The available NPSH, calculated in accordance with Regulatory Guide 1.1, is based on the following conditions:

a. pump runout flow of 6,060 gpm,

b. atmospheric containment pressure,

c. maximum suppression pool water temperature of 185°F,

d. suppression pool post-LOCA drawdown level of elevation 727 feet 1 inch,

e. suction piping losses, and

f. suction strainer fully loaded (i.e., conservatively specified debris loading resulting from LOCA-generated and pre-LOCA debris materials).

The calculated minimum available NPSH is 28.3 feet which exceeds the minimum required NPSH of 5 feet.

(2) Heat Exchangers

The RHR heat exchangers are sized on the basis of the duty for suppression pool cooling mode (Mode B-I of the process flow diagram). All other uses of these exchangers require less cooling surface.

Required flow rates are 4550 gpm on the shell side and 5800 gpm on the tube side (service water side). Rated inlet temperature is 185°F shell side and 95°F tube side. Design temperatures of the shell side are 32°F to 480°F. Design temperatures of the tube side are 32°F to 480°F. Design pressure is 500 psig on both sides. The construction materials are carbon steel for the pressure vessel with stainless steel tubes and stainless steel clad tube sheet.

(3) Valves

All of the directional valves in the system are conventional gate, globe, and check valves designed for nuclear service. The injection valves, reactor coolant isolation valves, and pump minimum flow valves are high speed valves, as operation for LPCI injection or vessel isolation requires. Valve pressure ratings are, as necessary, to provide the control or isolation function; i.e., all vessel isolation valves are rated as Class 1 nuclear valves rated at the same pressure as the primary system.

(4) ECCS Portions of the RHR System

The ECCS portions of the RHR system include those sections described through Mode A-I of Drawing 762E425AC.

The route includes suppression pool suction strainer, suction piping, RHR pumps, discharge piping, injection valves, and drywell piping into the vessel nozzles and core region of the reactor vessel.

Pool cooling components include pool suction strainer, suction piping, pumps, heat exchangers and pool return lines.

Containment spray components are the same as pool cooling except that the spray headers replace the pool return lines.

5.4.7.2.3 Controls and Instrumentation

Controls and instrumentation for the RHR system are described in Chapter 7.

5.4.7.2.4 Applicable Codes and Classifications

Piping, Pumps and Valves

a.	Process Side	ASME III	CLASS 1/2
b.	Service Water Side	ASME III	CLASS 3
	Heat Exchangers		
a.	Process Side	ASME III	CLASS 2
		TEMA	CLASS C
b.	Service Water Side	ASME III	CLASS 3
		TEMA	CLASS C

Electrical Portions

a. IEEE 279

b. IEEE 308

5.4.7.2.5 Reliability Considerations

The Residual Heat Removal System has included the redundancy requirements of Subsection 5.4.7.1.5. Two completely redundant loops have been provided to remove residual heat, each powered from a separate, emergency bus. With the exception of the common shutdown line, all mechanical and electrical components are separate. Either loop is capable of cooling down the reactor within a reasonable length of time.

5.4.7.2.6 Manual Action

(1) Residual Heat Removal (Shutdown Cooling Mode)

In shutdown operation, when vessel pressure is less than 104 psig, the pool suction valve may be closed for the initial shutdown loop. Local manually-operated flushing valves are utilized, and the stagnant water flushed to radwaste. The source of flush water is the condensate storage tank. At the end of this nominal flush, the shutdown cooling suction piping and the RHR pump may be prewarmed by opening the vessel suction valves, with effluent directed to radwaste as before. Then, the radwaste effluent valves are closed and the pump is started at a regulated flow through the return valve. Service water flow is started, unless already in operation for the warming activity, and cooldown of the vessel is in progress. Cooldown rate is subsequently controlled via valves 1E12-F053 (total flow) and 1E12-F048 (heat exchanger bypass flow) and 1E12-F003 (heat exchanger flow). Additionally, flow may be directed to the vessel head spray valve 1E12-F023. All operations are performed from the control room except for:

a) opening and closing of local flush water valves;

b) isolating the leak-off line from the shutdown cooling header to the division 2 water leg pump system;

c) the normally locked open breakers for valves lE12-F008 (shutdown cooling suction) and 1E12-F006B (RHR B Shutdown Cooling Suction Valve) are closed prior to commencing cooldown.

(2) Feedwater Leakage Control

Approximately 20 minutes following a DBA LOCA, operators will initiate the FWLC mode of the RHR by opening the RHR A or B loop keep fill valve, if the feedwater system is unavailable. The operator will ascertain that a DBA LOCA has occurred by high drywell pressure and low reactor water level. If the operator decides to use the RHR A loop as a source of keep fill supply, he must first establish that valves 1B21-F065A and B are closed. The keep fill valve that is opened must remain open, and the RHR loop from which it is supplied remain in either the LPCI, Containment Spray, or Suppression Pool Cooling mode as long as a water seal is required. If the operator switches between RHR loops for FWLC supply, he must close the keep fill valve from the inactive loop to prevent draining the water leg of the inactive loop should the RHR pump be shut down.

The manual actions required for the most limiting failure are discussed in Subsection 5.4.7.1.5.

If the operator omitted the shutdown cooling mode flush, the lower quality water which has been laid up in the RHR lines would be pumped into the reactor. Additional reactor water cleanup would be required to attain acceptable reactor water quality.

Administrative controls exist to lock the local flushing valve in the closed position.

If the operator forgot to close a local flushing water valve and continued shutdown procedures, reactor coolant would pressurize the flushing supply line up to the first check valve at the Cycled Condensate (CY) Pumps. No other consequence would occur since the flushing system as designed will withstand shutdown conditions up to the first check valve.

If the operator omitted closing the isolation of the shutdown cooling leak-off line, it creates a small flow path from the header to the suppression pool.

5.4.7.2.7 Outline of Operating Procedures

(1) Hot Standby to Cold Shutdown

a. Normal Mode - Condenser Available as a Heat Sink

- Cooldown from rated pressure to 96.5 psig* will use turbine bypass valves with RHR shutdown cooling mode isolated from the RPV.
- Flush of RHR system, if required, will be accomplished with condensate transfer pumps; maximum supply pressure 135 psig.
- Cooldown from ≤96.5 psig* to ≤200°F will utilize RHR in shutdown cooling mode. Protection to the low-pressure piping is offered by

* This pressure will be less than the auto isolation setpoint for F008 and F009.

isolation valves F008 and F009 at ≤104 psig and closure of check valves F050 and F019.

b. Off-Normal Mode - Condenser Not Available as a Heat Sink

- Safety relief valves and RCIC will be used initially as necessary to maintain or reduce RPV pressure below the first safety relief valve auto set point.
- Cooldown will continue until RPV pressure is ≤96.5 psig, when at least one loop of RHR will be lined up for shutdown cooling mode as needed.
- Cooldown from ≤96.5 psig* to ≤200°F will be essentially the same as 1a.

(2) Cold Shutdown to Hot Standby

a. Normal Mode - Condenser Available as Heat Sink

Normally, RHR operation in the shutdown cooling mode will be secured prior to withdrawing control rods or reaching 200°F. In any event, it will always be secured prior to an RPV pressure of 104 psig.

- Heatup to full pressure will utilize turbine bypass valves.

b. Off-Normal Mode - Condenser Unavailable as a Heat Sink

Normally, RHR operation in the shutdown cooling mode will be secured prior to withdrawing control rods or reaching 200°F. In any event, it will always be secured prior to an RPV pressure of 104 psig.

- If heatup beyond 104 psig is desired, pressure and level will be controlled with RCIC and/or RWCU.

5.4.7.3 Performance Evaluation

Thermal performance of the RHR heat exchangers is based upon containment cooling with excess capability for the shutdown mode. Because shutdown is usually a controlled operation, maximum service water temperature less 10° F is used as the service water inlet temperature. These are nominal design conditions; if the service water temperature is higher, the exchanger capabilities are reduced and the shutdown time is longer and vice versa.

5.4.7.3.1 Shutdown With All Components Available

No typical curve is included here to show vessel cooldown temperatures versus time due to the infinite variety of such curves that may be due to: (1) clean steam systems that may allow the

---

* This pressure will be less than the auto isolation setpoint for F008 and F009.

main condenser to be used as the heat sink when nuclear steam pressure is insufficient to maintain steam air ejector performance; (2) the condition of fouling of the exchangers; 3) operator use of one or two cooling loops; (4) coolant water temperature; (5) system flushing time. Since the exchangers are designed for the fouled condition with relatively high service water temperature, the units have excess capability to cool when first cut in at high vessel temperature. Total flow and mix temperature must be controlled to avoid exceeding 100°F per hour cooldown rate. (See section 5.4.7.1.1.1 for minimum shutdown time to reach 212°F.)

5.4.7.3.2 Shutdown With Most Limiting Failure

Shutdown under conditions of the most limiting failure is discussed in section 5.4.7.1.1.1. The capability of the heat exchanger for any time period is balanced against residual heat,pump heat, and sensible heat. The excess over residual heat and pump heat is used to reduce the sensible heat.

5.4.7.3.3 Shutdown with Crack in RHR Cooling Loop

If a pipe failure should occur outside containment in the RHR system when the plant is in shutdown cooling, acceptable core cooling would be achieved by the core cooling systems. The following core cooling systems would be available to maintain core cooling:

a. If the single active failure is HPCS, the following are available: LPCS + 2LPCI.

b. If the single active failure is LPCS, the following are available: HPCS + 2LPCI.

c. If the single active failure is LPCI (not shutdown cooling loop), the following are available: HPCS + 1LPCI + LPCS.

The maximum discharge rate resulting from the largest crack in the RHR piping outside containment as determined by the NRC criteria is 128.2 lbm/sec.

The following signals automatically isolate F008 and F009:

a. RPV water level low (Level 3) ,

b. RPV pressure high, and

c. equipment area temperature high.

No operator action is required to maintain core cooling since the failed pipe will automatically be isolated and the ECCS system will maintain water level.

If the feedwater flow were terminated before the pipe failure occurred, then HPCS could maintain the vessel water level.

If the HPCS is the assumed single failure, then one of the low pressure injection systems would maintain water level. If no other injection systems were available, the RHR train aligned for shutdown cooling could be realigned to provide injection and to replenish water level and maintain adequate core cooling.

The operator would be alerted to the failed pipe outside containment by:

a. equipment area temperature high,

b. RPV water level low (Level 3),

c. RHR equipment room sump level high, and

d. RHR equipment room radiation high.

Appropriate action will be provided by applicable Alarm Response Instructions.

5.4.7.4 Preoperational Testing

The following subsection is historical.

The preoperational test program and startup test program as discussed in Section 14.0 are used to generate data to verify the operational capabilities of each piece of equipment in the system: each instrument, each set point, each logic element, each pump, each heat exchanger, each valve, and each limit switch. In addition these programs verify the capabilities of the system to provide the flows, pressures, cooldown rates, and reaction times required to perform all system functions as specified for the system or component in the System Data Sheets and Process Data, except steam condensing modes. Logic elements are tested electrically; valves, pumps, controllers, relief valves are tested mechanically; finally the system is tested for total system performance against the design requirements as specified above using both the offsite power and standby emergency power. Preliminary heat exchanger performance can be evaluated by operating in the pool cooling mode, but a vessel shutdown is required for the final check due to the small temperature differences available with pool cooling.

5.4.8 Reactor Water Cleanup System

The reactor water generating system (RWCS) is classified as a Primary Power Generation System (not an Engineered Safety Feature), a small part of which is part of the Reactor Coolant Pressure Boundary up to and including the second isolation valve. The other portions of the system are not part of the RCPB and are isolatable from the reactor. The RWCS may be operated at any time during planned reactor operations or it may be shutdown if water quality is within the Technical Specification limits.

5.4.8.1 Design Bases

5.4.8.1.1 Safety Design Bases

The RCPB portion of the RWCS meets the requirements of Regulatory Guides 1.26 and 1.29 in order to:

(1) Prevent excessive loss of reactor coolant.

(2) Prevent the release of radioactive material from the reactor

(3) Isolate the major portion of the RWCS from the RCPB

5.4.8.1.2 Power Generation Design Bases

The reactor water cleanup system:

(1) Removes solid and dissolved impurities from reactor coolant, and measures the reactor water conductivity in accordance with Regulatory Guide 1.56

(2) Discharges excess reactor water during startup, shutdown, and hot standby conditions to the main condenser or radwaste

(3) Minimizes temperature gradients in the main recirculation piping and RPV during periods when the main recirculation pumps are unavailable. The operation of the RWCU system with the heat exchangers bypassed and the reactor coolant temperature above 435°F is prohibited since the feedwater piping is not analyzed for temperatures above 435°F.

(4) Minimizes the RWCU heat loss

(5) Enables the major portion of the RWCU to be serviced during reactor operation

(6) Prevents the standby liquid reactivity control material from being removed from the reactor water by the cleanup system when required for shutdown

5.4.8.2 System Description

The system takes its suction from the inlet of each reactor main recirculation pump and from the reactor pressure vessel bottom head. The process fluid is circulated with the cleanup pumps through a regenerative and nonregenerative heat exchanger for cooling, through the filter demineralizers for cleanup and back through the regenerative heat exchanger for reheating. The processed water is returned to the reactor pressure vessel and/or the main condenser or radwaste. (See Drawings M05-1076 and 105D4952AC.)

The major equipment of the reactor water cleanup system is located outside the drywell. This equipment includes pumps (outside containment), regenerative and nonregenerative heat exchangers, and filter-demineralizers with service equipment. Flow rate capacities for the major pieces of equipment are presented in Table 5.4-2.

The temperature of the filter-demineralizer units is limited by the resin operating temperature. Therefore the reactor coolant must be cooled before being processed in the filter-demineralizer units. The regenerative heat exchanger transfers heat from the tubeside (hot process inlet) to the shellside (cold process inlet). The shellside flow returns to the reactor. The nonregenerative heat exchanger cools the process further by transferring heat to the Component Closed Cooling Water System.

The filter-demineralizer units (see Drawing 794E766AB) are pressure precoat type filters using filter aid and mixed ion-exchange resins. Spent resins are not regenerable and are sluiced from the filter-demineralizer unit to a backwash receiving tank from which they are transferred to the radwaste system for processing and disposal. To prevent resins from entering the reactor recirculation system in the event of failure of a filter-demineralizer resin support, a strainer is installed on the filter-demineralizer unit. Each strainer and filter-demineralizer vessel has a local high differential pressure alarm which will cause a common trouble alarm to actuate in the control room. Upon further increase in differential pressure from the alarm point, the filter-demineralizer will automatically isolate.

The backwash and precoat cycle for a filter-demineralizer unit is entirely automatic to prevent human operational errors, such as inadvertent opening of valves that would initiate a backwash or contaminate reactor water with resins. The filter-demineralizer piping configuration is arranged to ensure that transfers are complete and crud traps are minimized. A bypass line is provided around the filter-demineralizer units.

In the event of low flow or loss of flow in the system, flow is maintained through each filter-demineralizer by its own holding pump. Sample points are provided in the common influent header and in each effluent line of the filter-demineralizer units for continuous indication and recording of system conductivity. High conductivity is annunciated in the control room. The main recirculation line sample point is also used as the normal source of reactor coolant grab samples. Sample analysis also indicates the effectiveness of the filter-demineralizer units.

Conductivity alarms for the reactor water cleanup system will be annunciated in the control room at the following conditions:

a. Marginal performance of demineralizer system

b. Noticeable breakthrough of one or more demineralizers

The setpoints for thise conditions are listed in Table 5.2-8.

(Q&R 281.6)

The suction line (RCPB portion) of the RWCS contains two motor-operated isolation valves, which automatically close in response to signals from RPV low water level, Leak Detection System, actuation of the Standby Liquid Control System, and (for outboard valve only) nonregenerative heat exchanger high outlet temperature. Section 7.6 describes the Leak Detection System requirements and they are summarized in Tables 5.2-9a and 5.2-9b. This isolation prevents the loss of reactor coolant and release of radioactive material from the reactor, prevents removal of liquid reactivity control material by the cleanup system should the SLCS be in operation, and prevents damage of the filter-deminerlizer resins due to high temperature. The RCPB isolation valves may be remote manually operated to isolate the system equipment for maintenance or servicing. The requirements for the RCPB are specified in Section 5.2.

The Reactor Water Cleanup pump suction outboard isolation valve may also be remote manually operated from the Auxiliary Building MCC outside the Main Control Room (MCR) with the valve transfer and control switches located at the MCC. The valve transfer and control switches are considered part of the Remote Shutdown System (RSS).

A remote manual-operated gate valve on the return line to the reactor provides long term leakage control. Instantaneous reverse flow isolation is provided by check valves in the RWCS piping.

Operation of the reactor water cleanup system is controlled from the main control room. Resin-changing operation, which include backwashing and precoating, are controlled from a local control panel.

A small portion of the reactor water cleanup flow is diverted from the reactor water cleanup pump discharge header, routed through a Durability Monitor and returned to the reactor water

cleanup pump suction header. The Durability Monitor is a sample panel consisting of removable tubing samples that can be analyzed to monitor the corresponding deposition of noble metals on reactor vessel internals. As the Durability Monitor performs no safety function, it is classified as a non-safety related component per Note (g) to Table 3.2-1.

5.4.8.3 System Evaluation

The Reactor Water Cleanup System in conjunction with the Condensate Treatment System, and the Fuel Pool Cooling and Cleanup System maintains reactor water quality during all reactor operating modes (Normal, Hot Standby, Startup, Shutdown, and Refueling).

This type of “pressure precoat” cleanup system was first put into operating in 1971 and is in use in all operating BWR plants started since that date. Operating plant experience has shown that the RWCS as designed in accordance with these criteria provides the required BWR water quality. The nonregenerative heat exchanger is sized to maintain the required process temperature for filter demineralization when the cooling capacity of the regenerative heat exchanger is reduced due to partially bypassing a portion of the return flow to the main condenser or radwaste. The control requirements of the RCPB isolation valves are designed to Subsection 7.3.1. The component design data (flowrates, pressure, and temperature) are presented in Table 5.4-2. All components are designed to the requirements of Section 3.2 according to the requirements of the P&IDs M05-1076 and 794E766AB.

The analytical methods specified for the determination of reactor water pH, conductivity, and chlorides at CPS are found in approved station procedures. (Q+R 281.7) Descriptions of these procedures will not be included in the SAR.

5.4.9 Main Steamlines and Feedwater Piping

5.4.9.1 Safety Design Bases

In order to satisfy the safety design bases, the main steam and feedwater lines have been designed:

(1) To accommodate operational stresses, such as internal pressures, safe shutdown earthquake, and other dynamic loads, without a failure that could lead to the release of radioactivity in excess of the guideline values in published regulations.

(2) With suitable accesses to permit in-service testing and inspections.

(3) With suitable protection from potential damage due to missiles and due to fluid jet and reaction forces resulting from postulated pipe breaks.

5.4.9.2 Power Generation Design Bases

In order to satisfy the design bases:

(1) The main steamlines have been designed to conduct steam from the reactor vessel over the full range of reactor power operation.

(2) The feedwater lines have been designed to conduct water to the reactor vessel over the full range of reactor power operation.

5.4.9.3 Description

The main steam piping is described in Section 10.3. The main steam and feedwater P&ID's are shown in Drawings M05-1002 and M05-1004 respectively.

The feedwater piping consists of two lines of 20-inch outside diameter, from the feedwater heaters, which penetrate the containment and drywell. In side the drywell, each line reduces to 18 inches in size. Each line then splits into two 12-inch lines. These four 12-inch lines connect to the reactor vessel.

Each feedwater line which penetrates the containment includes two containment isolation valves consisting of one check valve inside the drywell and one piston-actuated check valve outside the containment. Upstream from the containment outboard isolation valve, there is a motor-operated shutoff valve. The design pressure and temperature of the feedwater piping between the reactor and outboard shutoff valve are as follows:

	Design Pressure	Design Temperature
Reactor pressure vessel to maintenance valve	1250 psig	575°F
Maintenance valve to drywell isolation valve	2220 psig	575°F
Drywell isolation valve to outboard shutoff valve	2220 psig	450°F

The Seismic Category I design requirements are placed on the feedwater piping from the reactor pressure vessel through the containment outboard shutoff valve and connected piping up to the first seismic restraint beyond the defined boundaries per Regulatory Guide 1.29.

The materials used in the piping are in accordance with the applicable design code and supplementary requirements described in Section 3.2.

The generator requirements of the feedwater system are described in Subsections 7.1.2.1, 7.7.1, 7.7.2, and 10.4.7.

5.4.9.4 Safety Evaluation

Differential pressure on reactor internals under the assumed accident condition of a ruptured steamline is limited by the use of flow restrictors and by the use of four main steamlines.

Subsection 5.4.4 describes the details of the flow restrictors. All main steam and feedwater piping is designed in accordance with the requirements defined in Section 3.2. Design of the piping in accordance with these requirements ensures meeting the safety design bases.

5.4.9.5 Inspection and Testing

Inspection and testing are carried out in accordance with Subsection 3.9.1 and Chapter 14. In-service inspection is considered in the design of the main steam and feedwater piping. This consideration assures adequate working space access for the inspection of selected components and proper identification of the features to be inspected.

5.4.10 Pressurizer (Not Applicable to BWR)

5.4.11 Pressurizer Relief Discharge System (Not Applicable to BWR)

5.4.12 Valves

5.4.12.1 Safety Design Bases

Line valves such as gate, globe and check valves are located in fluid systems such as the RHR, RCIC, RWCU, HPCS, LPCS, and SLC systems to perform a mechanical function. Valves are components of the system pressure boundary and are designed to operate efficiently and to maintain the integrity of this boundary.

The valves are designed to operate under the internal pressure and temperature loading as well as the external loading experienced during the various system transient operating conditions. The valves are designed in accordance with the applicable requirements of Table 3.2-1. Compliance with the ASME Codes is discussed in Subsection 5.2.1. Design loading, design procedure, and acceptability are described in Subsection 3.9.3.

5.4.12.2 Description

Line valves furnished are manufactured standard types, designed and constructed in accordance with the requirements of ASME Section III for Class 1, 2 and 3 valves. All materials exclusive of seals and packing are designed for a 40-year plant life under the environmental conditions applicable to the particular system when appropriate maintenance is periodically performed.

Power operators have been procured based on sizing to operate successfully under the maximum differential pressure determined in the design specification.

5.4.12.3 Safety Evaluation

Line valves have been shop tested by the manufacturer for performability. Pressure-retaining parts are subject to the testing and examination requirements of Section III of the ASME Code. To minimize internal and external leakage past seating surfaces, maximum allowable leakage rates are stated in the applicable design specifications. The maximum allowable main seat and back seat leakage is 10 ml of water/hr/in. diameter of nominal valve size for all valves except check valves, where allowable seat leakage is 40 ml of water/hr/in. diameter of nominal valve size. Power actuators are subjected to a shop functional test to ensure that the actuators and accessories perform as required. Valve construction materials are compatible with the maximum anticipated radiation dosage for the service life of the valves.

5.4.12.4 Inspection and Testing

Valves which serve as containment isolation valves and which must remain closed (or open) during normal plant operation are partially exercised during this period to assure their operability at the time of an emergency or faulted condition. Testing of containment isolation valves is described in Subsection 6.2.6.3. Other valves, serving as system block or throttling valves, are exercised, without jeopardizing the integrity of a system, to assure their operability.

Leakage from critical valve stems is monitored by use of double-packed stuffing boxes with an intermediate lantern leakoff connection for detection and measurement of leakage rates. The leakage detection system is discussed in Subsection 7.1.2.1.24.

Motors used with valve actuators have been furnished in accordance with applicable industry standards. Each motor actuator has been assembled, factory-tested, and adjusted on the valve for proper operation, position and torque switch setting, position transmitter function (where applicable), and speed requirements. Valves have additionally been tested to demonstrate adequate stem thrust (or torque) capability to open (or close) the valve within the specified time at specified design pressure. Tests verified no mechanical damage to valve components during full stroking of the valve. Suppliers have furnished assurance of acceptability of the equipment for the intended service based on any combination of:

(1) test stand data,

(2) prior field performance,

(3) prototype testing, and/or

(4) engineering analysis.

Preoperational and operational testing performed on the installed valves consists of total circuit checkout and performance tests to verify speed requirements at specified differential pressure.

5.4.13 Safety and Relief Valves

5.4.13.1 Safety Design Bases

Overpressure protection has been provided at isolatable portions of systems in accordance with the rules set forth in the ASME Code, Section III for Class 1, 2 and 3 components.

5.4.13.2 Description

Pressure relief valves have been designed and constructed in accordance with the same code class as that of the line valves in the system.

Table 3.2-1 lists the applicable code classes for valves. The design criteria, design loading and design procedure are described in subsection 3.9.3.

5.4.13.3 Safety Evaluation

The use of pressure relieving devices will assure that overpressure will not exceed 10% above the design pressure of the system. The number of pressure relieving devices on a system or portion of a system has been determined on this basis.

5.4.13.4 Inspection and Testing

No provisions were made for in-line testing of pressure relief valves. Certified set pressures and relieving capacities are stamped on the body of the valves by the manufacturer and further examinations necessitate removal of the component.

5.4.14 Component Supports

Support elements are provided for those components beyond the reactor coolant pressure boundary which are in systems or sub-systems but that are closely allied with the reactor coolant system. These systems include: reactor feedwater, residual heat removal, reactor core isolation cooling, reactor water cleanup, high-pressure core spray, low-pressure core spray, and standby liquid control.

5.4.14.1 Safety Design Bases

Design loading combinations, design procedures, and acceptability criteria utilized are discussed in Subsection 3.9.3.4. Reactor vessel supports are discussed in Subsection 5.3.3. Static and dynamic analyses for Class 1, 2, and 3 components comply with the appropriate requirements of ASME Code, Section III. Support types and materials used for fabricated support elements conform to ASME Code, Section III, Subsection NF, and Code Cases accepted by the Commission.

5.4.14.2 Description

The use and location of rigid-type supports, variable or constant spring-type supports, snubbers, and anchors or guides are determined by static, dynamic, and stress analyses. Standard component supports are utilized to the maximum extent possible. Direct weldments to pipe wall have been analyzed in accordance with ASME Section III. Direct weldment to thin-wall pipe have been minimized where possible.

5.4.14.3 Safety Evaluation

Design loadings used for piping analyses for determination of adequate component support systems include all transient loading conditions expected by each component. Provisions have been made for spring-type supports for the initial dead weight loading due to hydrostatic testing of steam systems to prevent damage to this type of support. Component supports are further discussed in Subsection 3.9.3.4.

5.4.14.4 Inspection and Testing

After completion of the installation of a support system, all hanger elements were visually examined to assure that they are in correct adjustment in their cold setting position. Upon hot startup operations, thermal growth was observed to confirm that spring-type hangers, snubbers, and constant supports function properly between their hot and cold setting positions. Final adjustment capability is provided on spring supports, snubbers, constant supports, rod hangers, and sway struts. Specific inspection and testing procedures are outlined in Subsection 3.9.2.1 and Chapter 14. Weld inspection and standards are in accordance with ASME Code, Section III, Subsection NF. Welder qualifications and welding procedures are in accordance with ASME Code, Section IX.

5.4.15 Hydrogen Water Chemistry System

The purpose of the Hydrogen Water Chemistry (HWC) system is to reduce rates of intergranular stress corrosion cracking (IGSCC) in recirculation piping and reactor vessel internals. This is accomplished by injecting hydrogen into the condensate booster pump suction header to suppress the formation of radiolytic oxygen in the reactor coolant. Suppression of dissolved oxygen, coupled with high purity reactor water, reduces the susceptibility of reactor piping and internal materials to IGSCC. The HWC system is designed to inject up to 21 scfm of hydrogen, corresponding to a feedwater dissolved hydrogen concentration of 0.45 ppm. Hydrogen injection results in an excess ratio of hydrogen to oxygen at the entrance to the offgas system. Air addition is provided to allow the hydrogen to recombine with oxygen in the offgas recombiners. Some air is available from condenser inleakage. Should the condenser inleakage be insufficient, additional air can be introduced into the offgas system to meet the HWC requirement. The HWC system is non-safety related.

5.4.15.1 Design Basis

The HWC system is designed to be capable of attaining and maintaining the following water chemistry limit in the reactor coolant to mitigate the potential for IGSCC.

Electrochemical Corrosion Potential below -230 mV(SHE)

The HWC system design is based on EPRI guidelines report EPRI NP-5283-SR-A (Reference 5). This report has been accepted by the NRC and generally establishes the design and operational guidance for HWC systems. Exceptions to the EPRI guidelines are justified in Reference 6.

5.4.15.2 System Description

Hydrogen Water Chemistry (HWC) is implemented in order to mitigate Intergranular Stress Corrosion Cracking (IGSCC) in the reactor recirculation piping and in the reactor internals. In addition, NobleChem™ (periodic noble metals injection) is implemented to minimize the required hydrogen injection rates and to minimize the resultant increase in main steam line radiation.

The HWC system includes a hydrogen isolation panel, a hydrogen injection panel and a hydrogen control panel. The hydrogen isolation panel is located in northeast corner of the Radwaste Building basement where the hydrogen supply piping enters the building. The injection and control panels are located in the Turbine Building basement just outside the condensate booster pump room. Low pressure hydrogen gas (approximately 320 psig) is injected during normal operations into the suction of the condensate booster pumps. The hydrogen injection rate is proportional to the reactor power level. The normal injection rate is determined by testing. The system design maximum injection rate is 21 scfm.

The hydrogen gas for HWC is supplied from transportable tube trailers. These transportable vessels are designed to DOT standards and store hydrogen at pressures up to 2650 psig at ambient temperatures. Two transportable vessels will normally be stored on the HWC truck pad located just outside the security fence north of the plant. The new storage facility is designed to accommodate three transportable vessels to allow uninterrupted hydrogen supply during switchover. Piping is provided to supply the Hydrogen Generator Fill (HY) system from the HWC truck pad.

The HWC system also includes a Durability Monitor (DM) installed in the RWCU system. Durability monitoring will provide a measure of the effectiveness of noble metal injection. The Durability Monitor is discussed in Section 5.4.8.2.

Air inleakage to the offgas system must be sufficient to recombine the excess hydrogen. The offgas noncondensibles flow rate is a manual input to the HWC system controls. The design maximum amount of air addition required is 68 scfm for the design maximum hydrogen injection flow of 21 scfm. The normal amount of air addition required is 55 scfm for the normal hydrogen injection flow of 17 scfm. These air addition requirements include condenser air inleakage and additional air introduced into the offgas system.

The HWC system is automatically isolated under the following conditions:

- High hydrogen flow
- Low or High hydrogen pressure
- High hydrogen area monitor reading
- High offgas hydrogen analyzer reading
- Low reactor power (feedwater flow)
- PLC fault

In addition, the HWC system can be manually isolated by pushbuttons at the local control panel and in the main control room.

5.4.16 References

(1) Ianni, P.W., “Effectiveness of Core Standby Cooling Systems for General Electric Boiling Water Reactors,” APED-5458, March 1968.

(2) “Design and Performance of General Electric Boiling Water Reactor Main Steam Line Isolation Valves,” APED-5750, General Electric Co., Atomic Power Equipment Department, March 1969.

(3) Calculation IP-M-0089, GL 89-10 Differential Pressure Calculations For Selected RCIC System MOVs.

(4) Inservice Inspection (ISI) Program, Appendix XI

(5) EPRI NP-5283-SR-A, “Guidelines for Permanent BWR Hydrogen Water Chemistry Installations-1987”.

(6) GE Design Specification 26A5771, “Hydrogen Water Chemistry Injection System”.

TABLE 5.4-1
REACTOR RECIRCULATION SYSTEM DESIGN CHARACTERISTICS

External Loops

Number of Loops	2

Pipeline sizes (nominal O.D.)

Pump suction, in.	20
Pump discharge, in.	20
Ring header nominal size, in.	16
External riser nominal size, in.	10
Internal riser nominal size, in.	10

SINGLE LOOP PIPING DESCRIPTION	QUANTITY	APPROX LENGTH (feet)	NOMINAL SIZE (inches)
Pump Suction Line	-	-	-
Straight Pipe	-	30	20
Elbows	3	-	20
Gate Valves	1	-	20
Discharge Line	-	-	-
Straight Pipe	-	28	20
Elbows	2	-	20
Flow Control Valves	1	-	20
Gate Valves	1	-	20
Discharge Manifold	-	-	-
Pipe	-	40	16
Reducer Cross	1	-	20x16
Contour Nozzle	4	-	16x10
Caps	2	-	16
Concentric Reducer	1	-	20x10
External Risers	-	-	-
Straight Pipe	4	5	10
	1	3	10
Elbows	5	-	10

Design Pressure (psig)/Design Temperature(°F)

Suction piping and valve up to and including pump suction nozzle	1250/575
Pump, discharge valves, and piping between	1650/575
Piping after discharge blocking valve up to vessel	1550/575
Pump auxiliary piping and cooling water piping	200/150
Vessel bottom drain	1250/575
Pump seal leak off piping	150/212

TABLE 5.4-1
REACTOR RECIRCULATION SYSTEM DESIGN CHARACTERISTICS (Continued)

RECIRCULATION PUMP	
Operation at Rated Conditions and 100% Core Flow	
Flow, gpm	32,700
Flow, lb/hr	12.41×10^6
Total developed head, ft	811
Suction Pressure (static), psia	1040
Required NPSH, ft	90
Water temperature (max), °F	532
Pump Brake HP at rated flow, hp	5844
Flow velocity at pump suction, fps	41.6
Operation at Low Speed Conditions	
Percent speed (pump driven by LMFG set-600V-15Hz)	25%
Low speed rated flow, gpm	7800
Head at rated flow, ft	47
Maximum pump brake horsepower - hot, hp	116
Maximum pump brake horsepower - cold, hp	153
Available NPSH (minimum), ft	70
PUMP MOTOR	
Voltage Rating	6600 volt
Rated Speed (normal), RPM	1778
Motor rating, hp	6300
Phase	3
Frequency, Hz	60
Rotational Inertia, lb- ft^2	≥ 15,200
JET PUMPS	
Number	20
Total jet pump driving flow, lb/hr	24.82×10^6
Throat ID, in.	6.0
Diffuser ID, in.	13.45
Nozzle ID (five each), in.	1.13
Diffuser exit velocity, fps	25.2
Jet Pump Head, ft	85.4
FLOW CONTROL VALVE	
Type	Ball
Material	Austenitic Stainless Steel
Type Actuation	Hydraulic
Failure mode (on loss of power or control signal)	As is
CV at valve maximum position (min. required)	5750
Valve size diameter, in.	20

TABLE 5.4-1
REACTOR RECIRCULATION SYSTEM DESIGN CHARACTERISTICS (Continued)

RECIRCULATION BLOCK VALVE, DISCHARGE	
Type	Gate
Actuator	Motor Operated
Material	Austenitic Stainless Steel
Valve size diameter, in.	20
RECIRCULATION BLOCK VALVE, SUCTION	
Type	Gate
Actuator	Motor Operated
Material	Austenitic Stainless Steel
Valve size diameter, in.	20
LFMG SET	
Motor Horsepower (nameplate)	300
Voltage (volts)	4000
Generator Frequency (HZ)	15
Generator Voltage (volts)	600

TABLE 5.4-2
REACTOR WATER CLEANUP SYSTEM EQUIPMENT DESIGN DATA

SYSTEM FLOW RATE (lb/hr):	124000

PUMPS

Number Required	2
Capacity - % (each)	50
Design temperature - (°F)	575
Design Pressure - (psig)	1410
Maximum Discharge head at shutoff - (ft)	600
Minimum Available NPSH - (ft)	13.0

HEAT EXCHANGERS

	Regenerative	Non-Regenerative
Capacity - %	100	100
Shell Design Pressure - (psig)	1420	150
Shell design temperature (°F)	575	370
Tube design pressure - (psig)	1420	1420
Tube design temperature - (°F)	575	575

FILTER-DEMINERALIZERS

Type:	pressure precoat
Number Required -	2
Capacity - % (each)	50
Flow Rate Per Unit - (lb/hr)	62000
Design temperature - (°F)	150
Design Pressure - (psig)	1410

Note: Clinton plant has redundant regenerative and non-regenerative heat exchangers.

TABLE 5.4-3
RHR PUMP/VALVE LOGIC

VALVE NUMBER	VALVE FUNCTION	NORMAL POSITION	AUTO LOGIC OR PERMISSIVES*
1E12-F003 A/B	Heat exchanger shell discharge	Open	None
1E12-F004 A/B	Suppression Pool suction	Open	Cannot be opened if F006 is open in same loop
1E12-F006	Shutdown to A/B loop pumps	Closed	Cannot be opened if F004 or F024 are open in same loop
1E12-F008	Outboard shutdown valve	Closed	A, B, C, D, F
1E12-F009	Shutdown Valve inboard	Closed	A, B, C, D, F
1E12-F021	'C' loop discharge to pool	Closed	E
1E12-F023	RPV head spray valve	Closed	A, B, C, D, F
1E12-F024 A/B	A/B loop discharge to pool	Closed	E, I, Cannot be opened if F006 is open in same loop
1E12-F027 A/B	A/B loop containment isol	Open	G, cannot be opened unless F028, 42 are closed (normal operation)
1E12-F028 A/B	A/B loop containment spray	Closed	H, J cannot be opened unless F027 is closed (normal operation)
1E12-F037 A/B	A/B loop return to upper pool	Closed	D, E1, F

* See Notes, Sheet 4

TABLE 5.4-3
RHR PUMP/VALVE LOGIC (Continued)

VALVE NUMBER	VALVE FUNCTION	NORMAL POSITION	AUTO LOGIC OR PERMISSIVES*
1E12-F040	Flush to radwaste	Closed	D, E1, F
1E12-F042 A/B	LPCI injection valve	Closed	G, I
1E12-F042C	LPCI injection valve	Closed	G
1E12-F047 A/B	Heat exchanger shell inlet	Open	None
1E12-F048 A/B	Heat Exchanger shell bypass	Open	G, I
1E12-F049	Flush to radwaste	Closed	D, E1, F
1E12-F053 A/B	Shutdown return to feedwater	Closed	A, B, C, D, F
1E12-F060 A/B	Water sampling valve	Closed	D, E_1, F
1E12-F064 A/B/C	RHR pump min. flow control	Open	Auto open or closed on main line low or high flow
1E12-F068 A/B	Service water discharge	Closed	H
1E12-F075 A/B	Water sampling valve	Closed	D, E_1, F
1E12-F094	Service water to RHR crosstie	Closed	None
1E12-F095	Service water crosstie vent	Open	Closes when F094 or F096 is signaled open
1E12-F096	Service water to RHR crosstie	Closed	None
1E12-F105	Suppression pool suction loop C	Open	None

TABLE 5.4-3
RHR PUMP/VALVE LOGIC (Continued)

VALVE NUMBER	VALVE FUNCTION	NORMAL POSITION	AUTO LOGIC OR PERMISSIVES*
RHR pump A/B/C	N/A	Stopped	G, not permissive when no suction source is open
1E12-F496	FWLC Injection	Closed	Permissive to open or remain open when Feedwater pressure is less than max RHR operating pressure.
1E12-F497	FWLC Injection	Closed	Permissive to open or remain open when Feedwater pressure is less than max RHR operating pressure.

TABLE 5.4-3
RHR PUMP/VALVE LOGIC (Continued)

(1) Notes for Table 5.4-3

A. Signaled closed when RPV pressure increases to set point

B. Interlocked closed when RPV pressure is above set point

C. Permitted to open when RPV pressure is below set point

D. Signaled closed when RPV water level decreases to level 3

E. Signaled closed on LOCA signal (High Drywell Pressure or RPV Level Low-Level 1)

E_1 High Drywell Pressure

F. Signaled closed on leak detection signal

G. Signaled open/start on LOCA signal

H. Signaled open on combination of high drywell pressure, high containment pressure, and LOCA timer runout

I. Signaled closed on combination of high drywell pressure, high containment pressure, and LOCA timer runout (F048 only, both F003 and F047 in the same loop are open)

J. Signaled closed on LOCA signal with no containment spray initiation signal present

TABLE 5.4-4
RECIRCULATION SYSTEM TRIP AND START FUNCTIONS

	ACTION				
EVENT	A	B	C	D	E
1	X		X		X
2	X		X		X
3		X		X	
4					X
5				X	
6	X			X	
7	X			X	
8	X		X		X
9	X			X	
10	X		X		X

Events

1. Suction or discharge block valve less than 90% open.
2. Vessel high pressure (ATWS).
3. Turbine trip or generator load rejection.
4. 100% speed power supply trip of one of two operating recirculation pumps.
5. 100% speed power supply trip of all operating recirculation pumps.
6. Total feedwater flow less than approximately 25% nuclear boiler rated.
7. Temperature difference between the vessel dome steam temperature (vessel dome pressure measurement converted to temperature) and the recirculation pump suction temperature is less than the minimum permissible value.
8. Pump motor or LFMG set electrical protection logic is activated.
9. Vessel low level (Level 3).
10. Vessel low-low level (Level 2, ATWS).

Actions

A. Normal control trip of 100% speed power supply.
B. RPT engineered Safety Class 3 trip of 100% speed power supply.
C. Trip of 25% speed power supply.
D. Automatic start of LFMG set during coastdown following a 100% speed trip.
E. No automatic start of LFMG set during coastdown following a 100% speed trip.

TABLE 5.4-5

Reactor Core Isolation Cooling System - Design Specification Valve Stroke Time/Differential Pressure Historical Infomation

VALVE NUMBER	VALVE NAME	DIFFERENTIAL PRESSURE *(Historical Information)*	STROKE TIME *(Historical Information)*
1E51F045	Steam Supply Valve	Open against full differential pressure of 1200 psi	Open within 18 seconds Close within 60 seconds
1E51F013	Pump Discharge Valve	Open and/or close against full differential pressure of 1400 psi	Open and/or close within 17 seconds
1E51F019	Pump Minimum Flow Bypass Valve	Open and/or close against full differential pressure of 1400 psi	Open and/or close within 5 seconds
1E51F063 1E51F064	RCIC Steam Supply Isolation Valves	Open and/or close against full differential pressure of 1200 psi	Open and/or close within 41 seconds
1E51F022	Pump Test Return Valve	Capable of throttling against differential pressures up to 100 psi and closure against differential pressure of 1400 psi	
1E51F031	Pump Suction Valve, Suppression Pool	Capable of opening and closing against 75 psi differential pressure	----
1E51F068	Turbine Exhaust Valve	Opens and/or closes against 30 psi differential pressure at a temperature of 330°F	----
1E51F076	Isolation Valve, Steam Line	Opens and/or closes against differential pressure of 1200 psi	----
1E51F077	Vacuum Breaker Isolation Valve	Open and/or close against a differential pressure of 30 psi	Opens and/or closes at a minimum rate of 12 inches per minute

TABLE 5.4-5
Reactor Core Isolation Cooling System - Design Specification Valve Stroke Time/Differential Pressure Historical Information
(Continued)

VALVE NUMBER	VALVE NAME	DIFFERENTIAL PRESSURE *(Historical Information)*	STROKE TIME *(Historical Information)*
1E51F078	Vacuum Breaker Isolation Valve	Open and/or close against a differential pressure of 30 psi	Open and/or close within 27 seconds
1E51F004 1E51F006	Steam Exhaust Drain Pot System Isolation Valves	Operate against a differential pressure of 75 psi	----
1E51F010	RCIC Storage Tank Isolation Valve	Operate against a differential pressure of 75 psi	----
1E51F025 1E51F026	Steam Inlet Drain Pot System Isolation Valves	Operate against a differential pressure of 1200 psi	----
1E51F054	Steam Inlet Trap Bypass Valve	Operate against a differential pressure of 1200 psi	----
1E51F046	Cooling Loop Shut Off Valve	Operate against a differential pressure of 1400 psi	----
1E51F059	Pump Test Return Valve	Operate against a differential pressure of 1400 psi	----

	PRESSURE (psia)	FLOW (lb/hr)	TEMPERATURE (°F)	ENTHALPY (Btu/lb)
1. CORE INLET	1075	84.5×10^6	531	525.5
2. CORE OUTLET	1050	84.5×10^6	551	665.5
3. SEPARATOR OUTLET (STEAM DOME)	1040	15.15×10^6	549	1190.8
4. CONDITIONS UPSTREAM OF TSV	954	15.15×10^6	539	1190.8
5. FEEDWATER INLET (INCLUDES CLEANUP RETURN FLOW)	1065	15.25×10^6	430	408.5
6. RECIRCULATION PUMP SUCTION	1040	*24.6×10^6	531	525.3
7. RECIRCULATION PUMP DISCHARGE	1310	*24.6×10^6	532	526.6

* LOOP 1 + LOOP 2: TOTAL RECIRCULATION FLOW

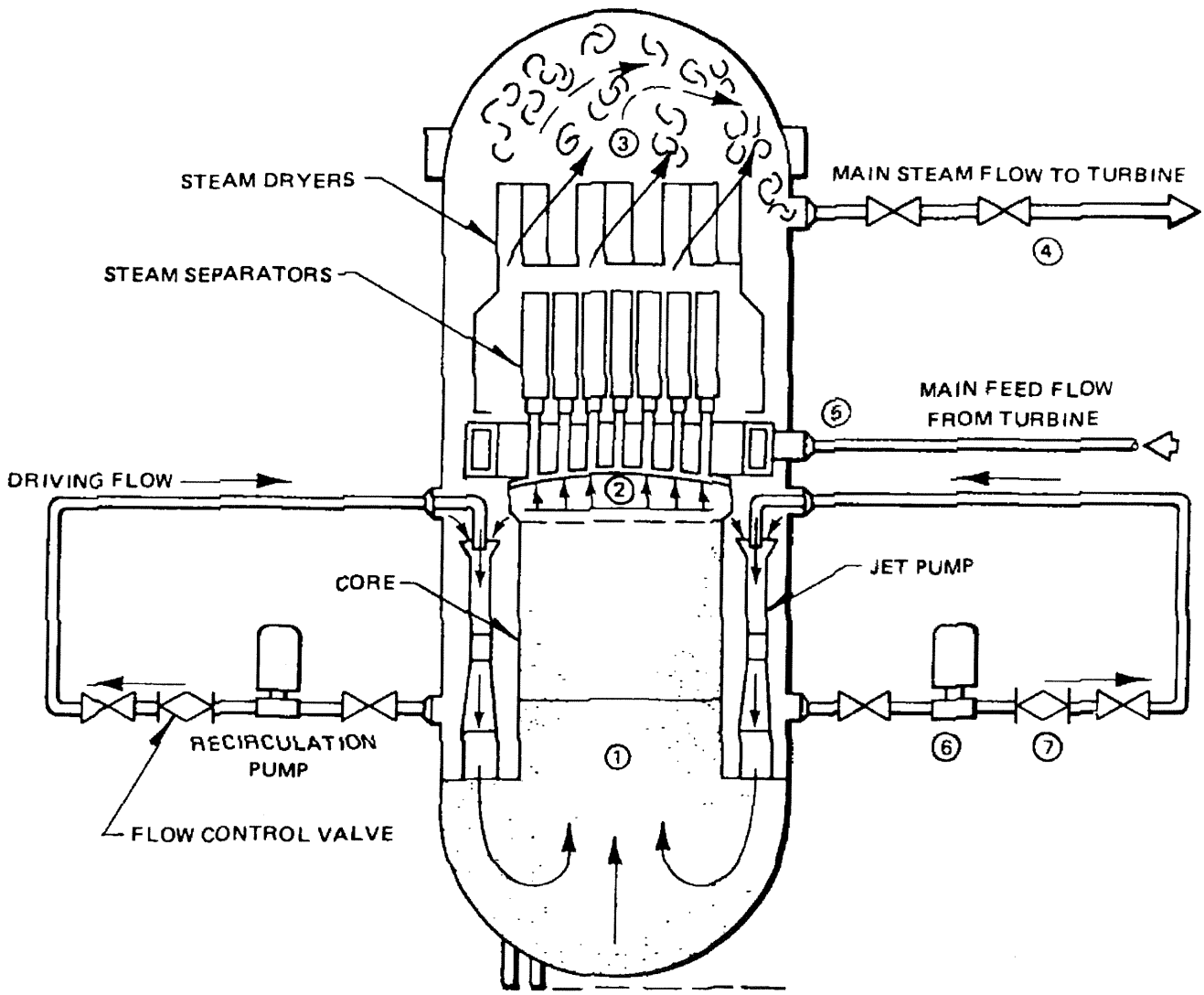

Figure 5.1-1. Rated Operating Conditions of the Boiling Water Reactor

	VOLUME OF FLUID (ft^3)
A. LOWER PLENUM	3310
B. CORE	1680
C. UPPER PLENUM AND SEPARATORS	1990
D. DOME (ABOVE NORMAL WATER LEVEL)	4780
E. DOWNCOMER REGION	3400
F. RECIRC LOOPS AND JET PUMPS	780

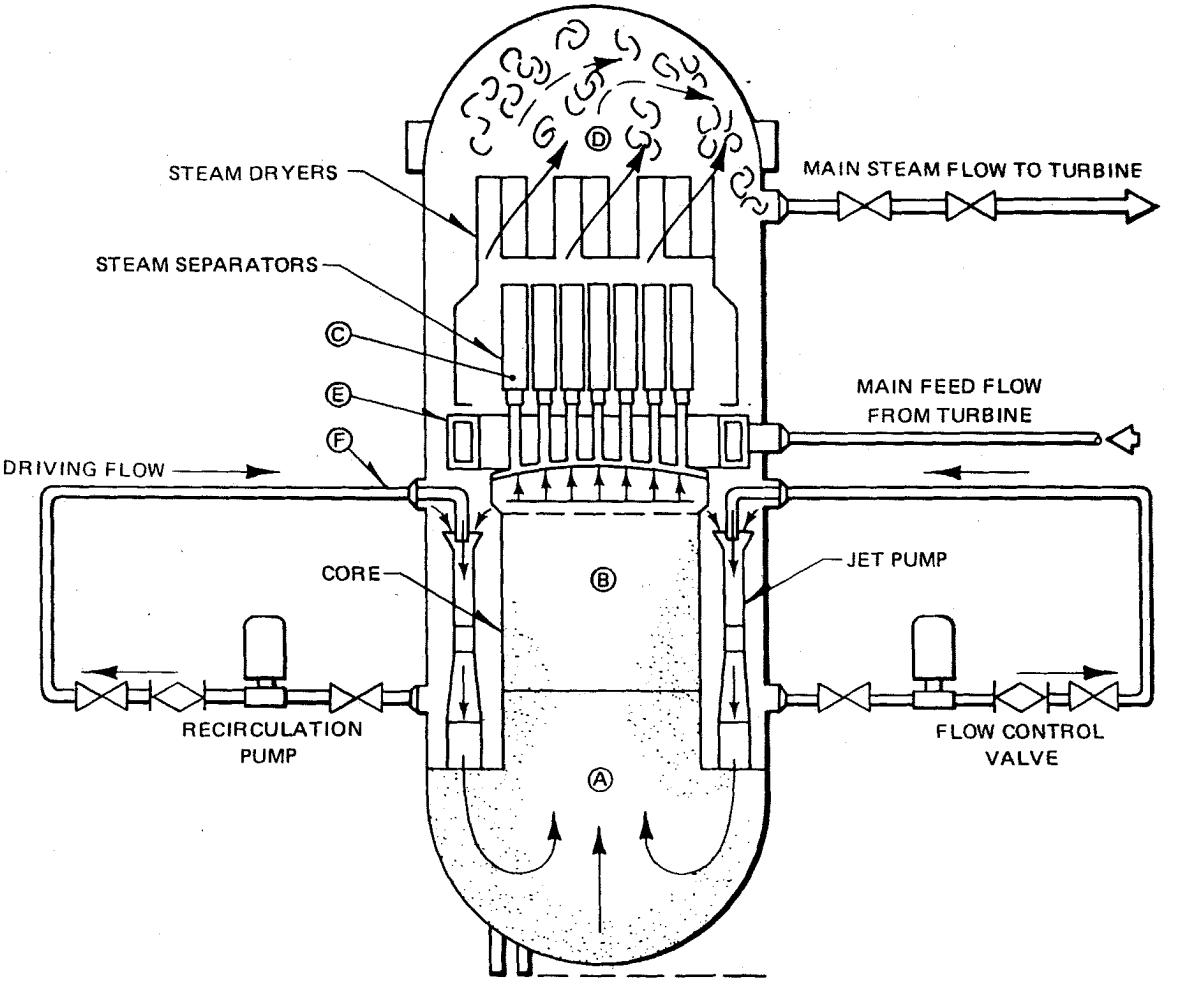

Figure 5.1-2. Coolant Volumes of the Boiling Water Reactor

Figures 5.1-3 and 5.1-4
Deleted

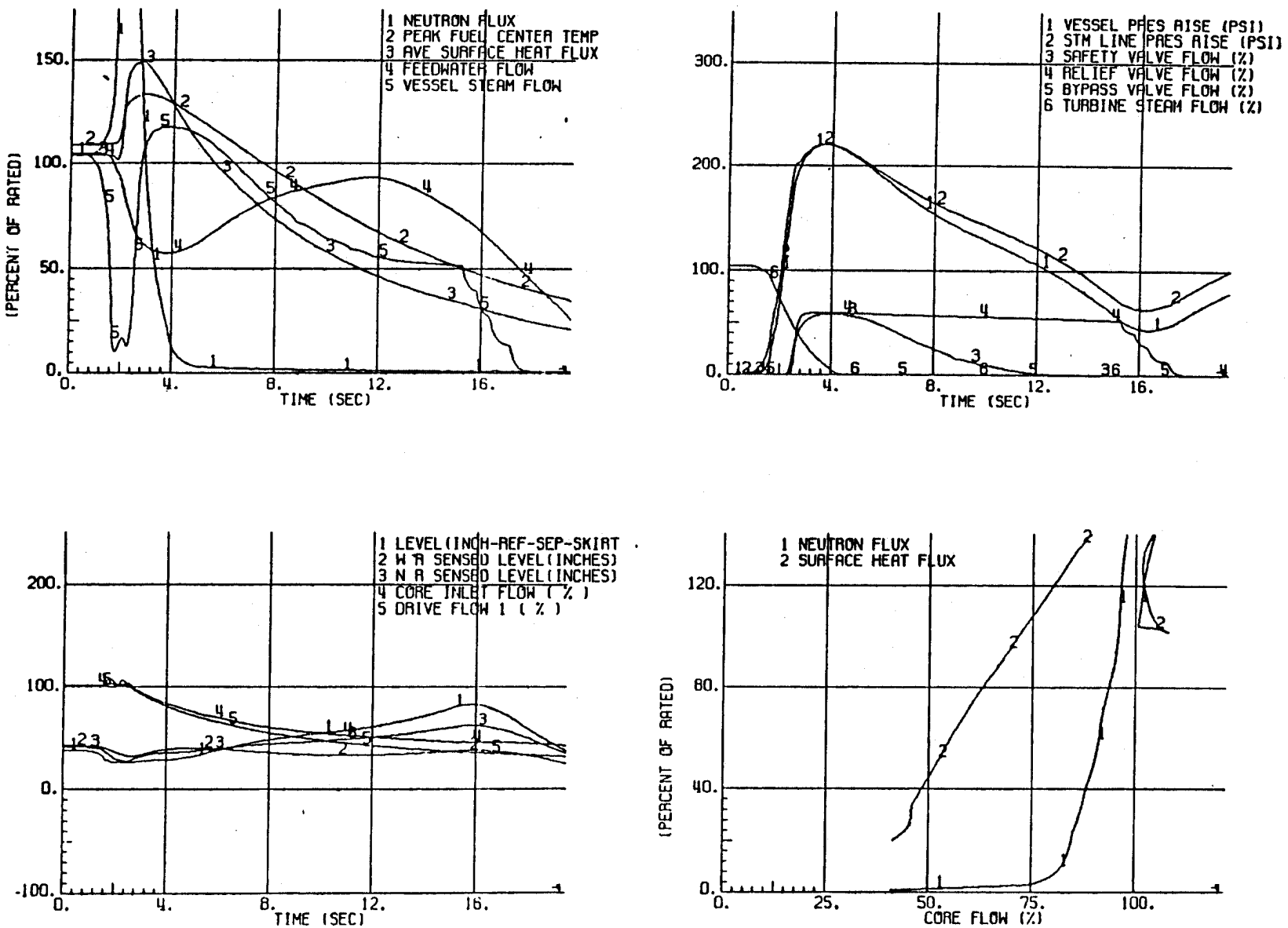

Figure 5.2-1. Safety/Relief Valve Capacity Sizing Transient - MSIV Closure with High Flux Trip (Initial Cycle Analysis - See Appendix 15D for Current Cycle Analysis)

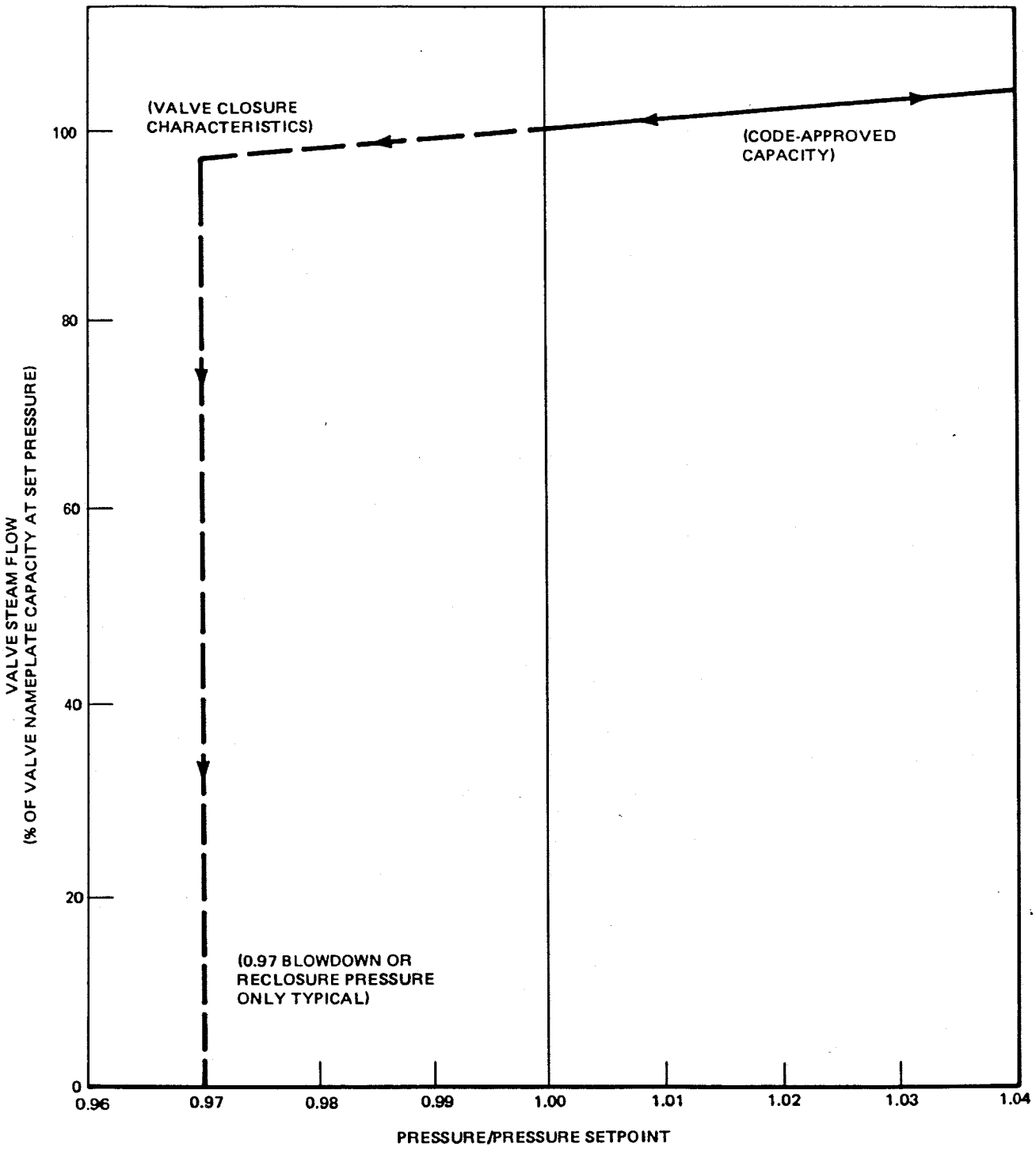

Figure 5.2-2A. Safety/Relief Valve Lift vs. Time Characteristic
(Power-Actuated Relief Mode)
(See Reference 6)

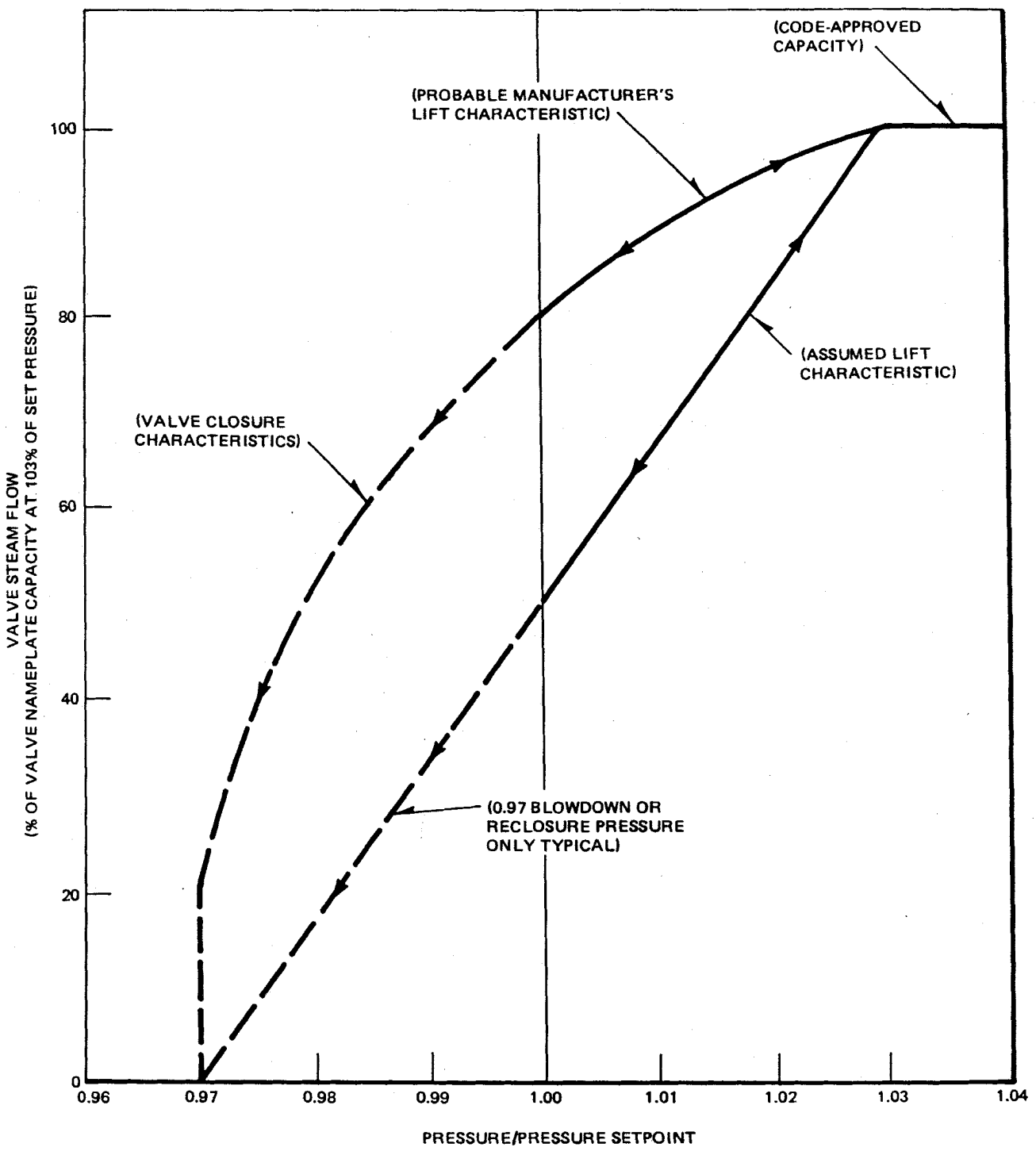

Figure 5.2-2B. Safety/Relief Valve Lift vs. Time Characteristic (Spring Action Safety Mode)

(See Reference 6)

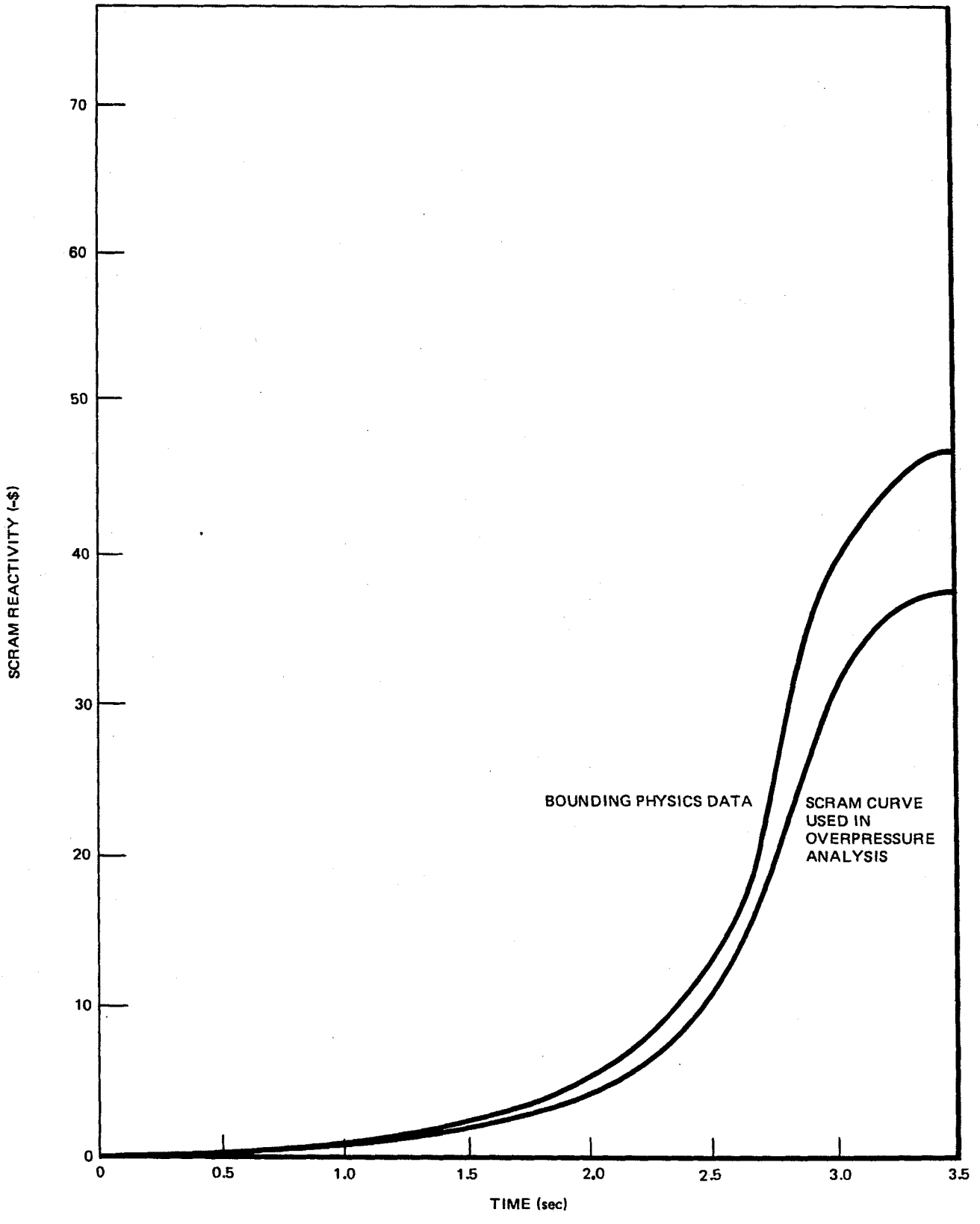

Figure 5.2-3A. Scram Reactivity Versus Time Characteristic
(See Reference 6)

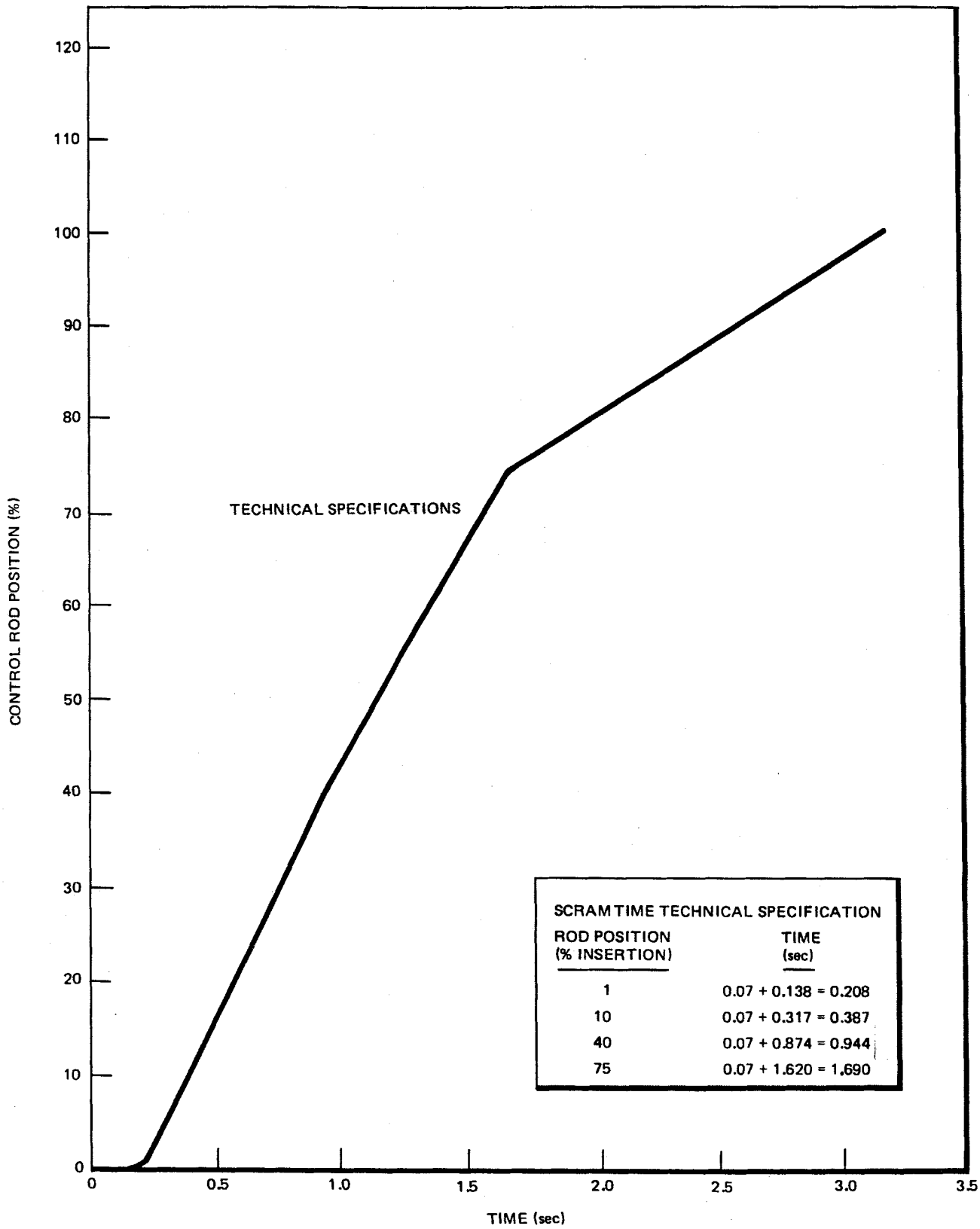

Figure 5.2-3B. Control Rod Versus Time Characteristics
(See Reference 6)

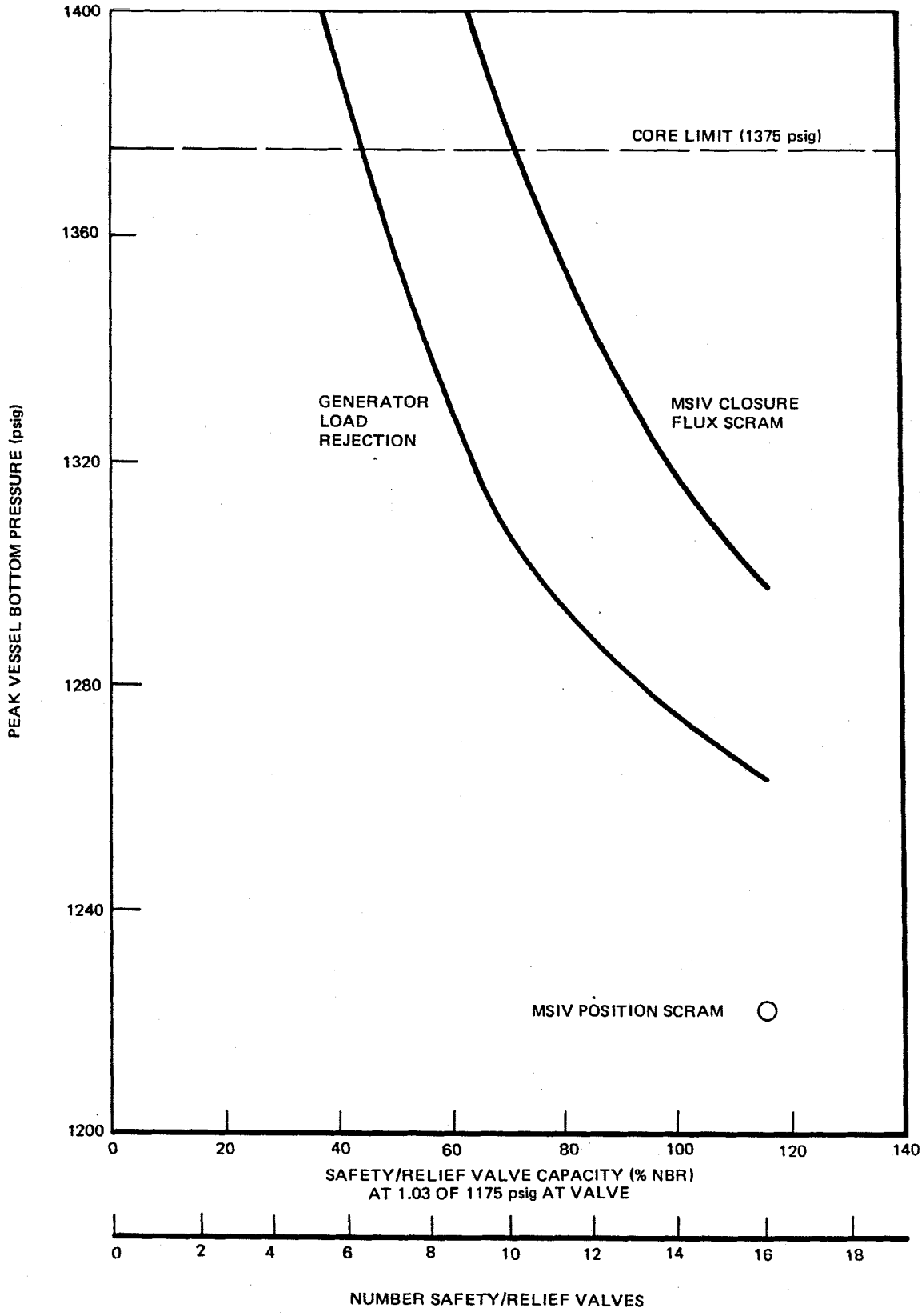

Figure 5.2-4. Peak Vessel Pressure Versus Safety/Relief Capacity (See Reference 6)

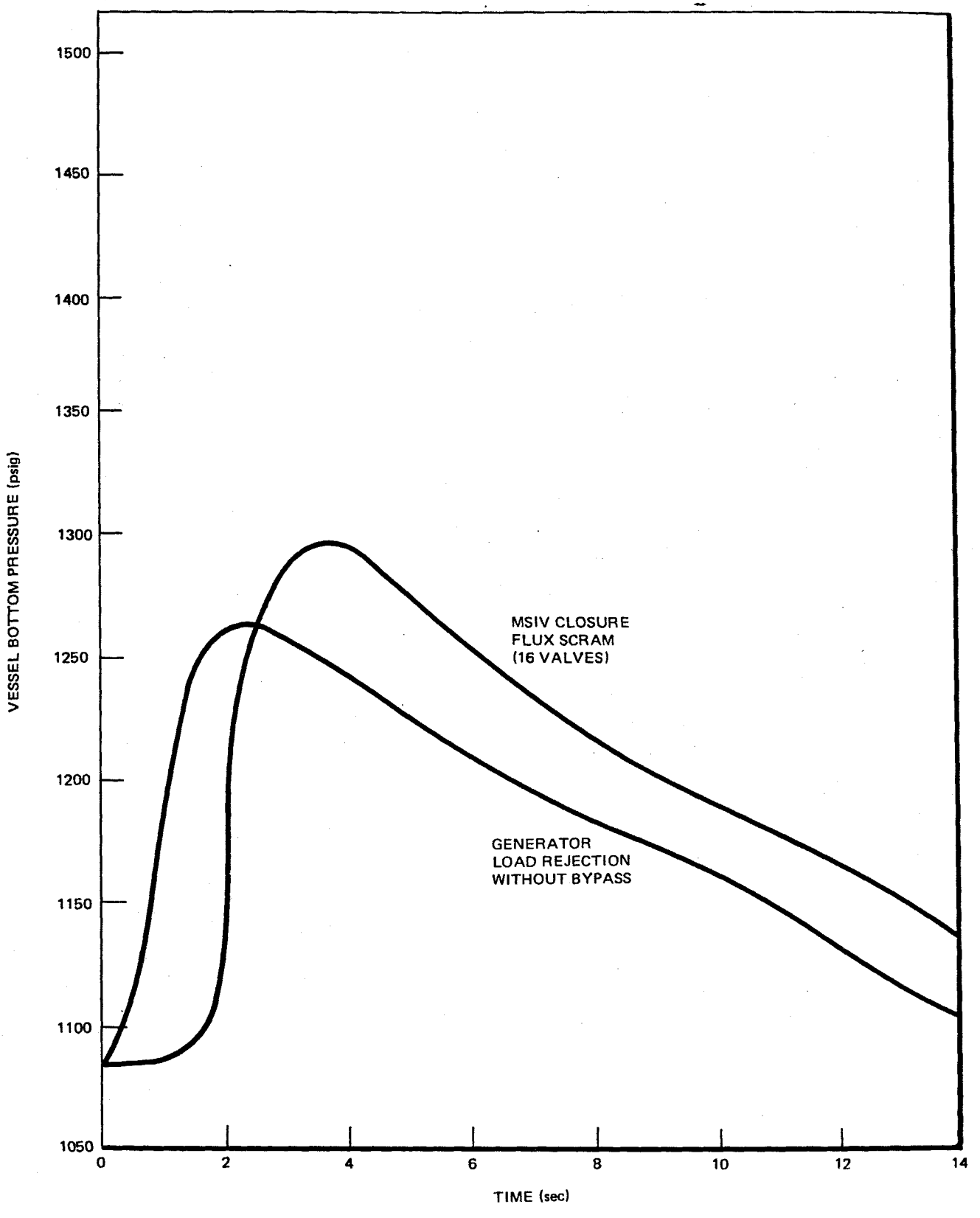

Figure 5.2-5. Time Response for Pressurization Transients for Safety/Relief Capacity Sizing (See Reference 6)

FIGURE 5.2-6

HAS BEEN DELETED

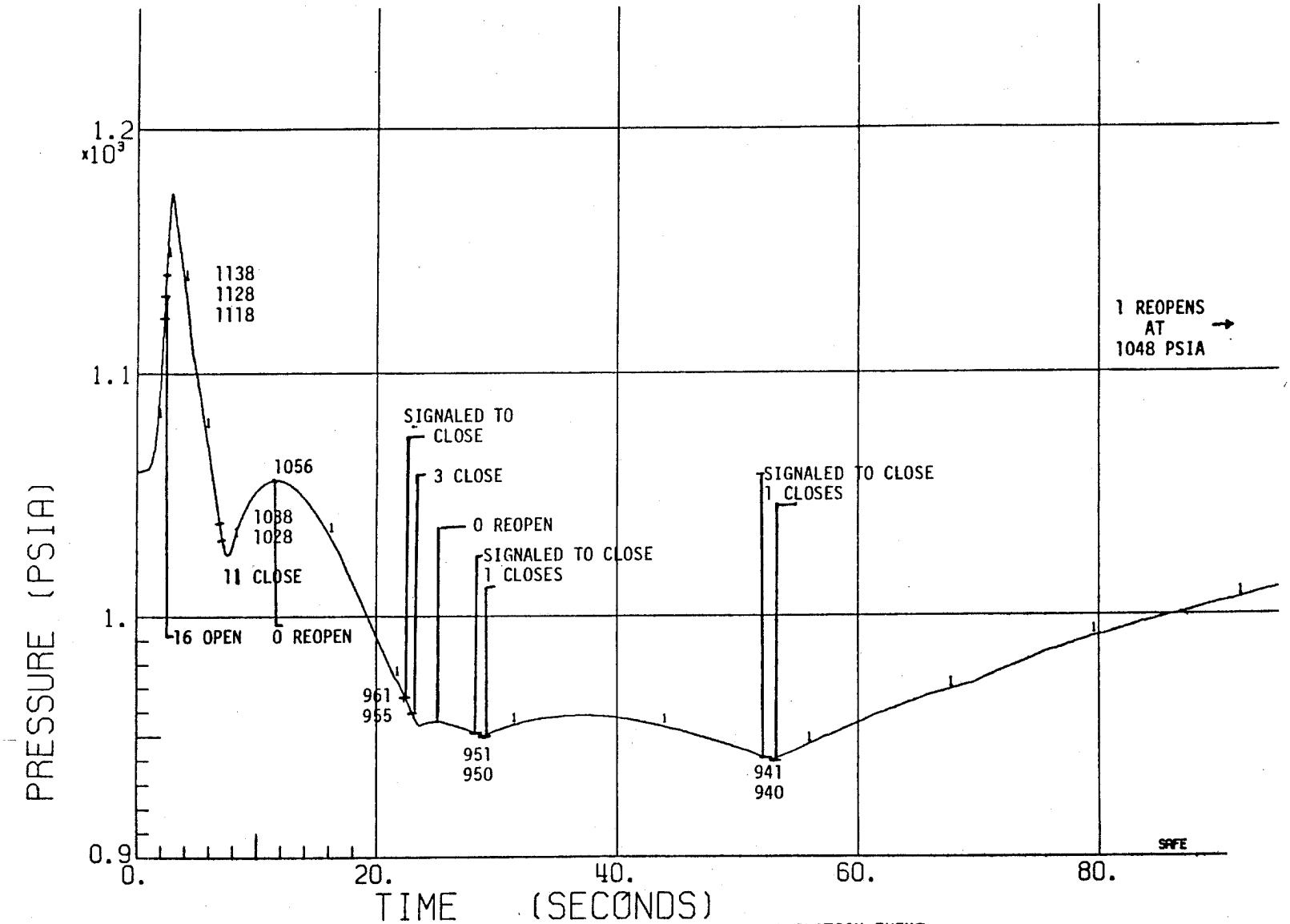

FIGURE 5.2-7 A - REACTOR VESSEL PRESSURE FOLLOWING TRANSIENT ISOLATION EVENT

FIGURE 5.2-7A

REACTOR VESSEL PRESSURE
FOLLOWING TRANSIENT ISOLATION EVENT
(SEE REFERENCE 6)

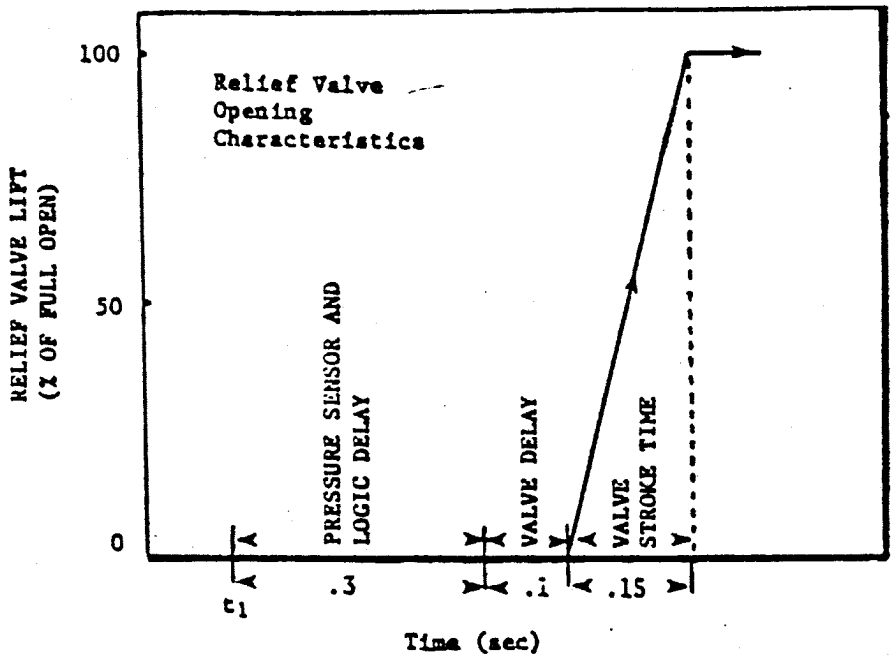

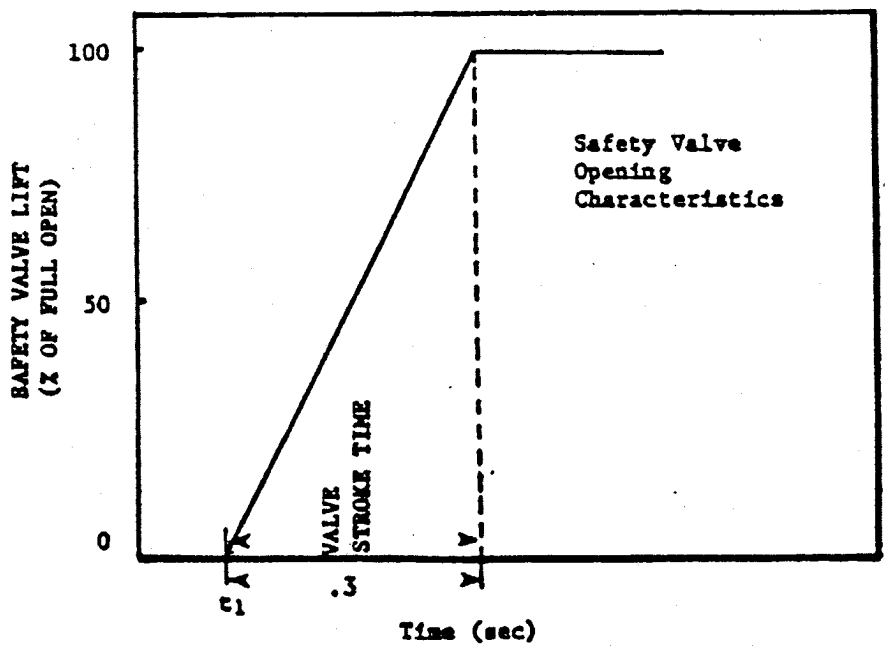

t_1 = Time at which pressure exceeds the valve set pressure

FIGURE 5.2-7B

POWER ACTUATED AND SAFETY ACTION
VALVE LIFT CHARACTERISTICS
(SEE REFERENCE 6)

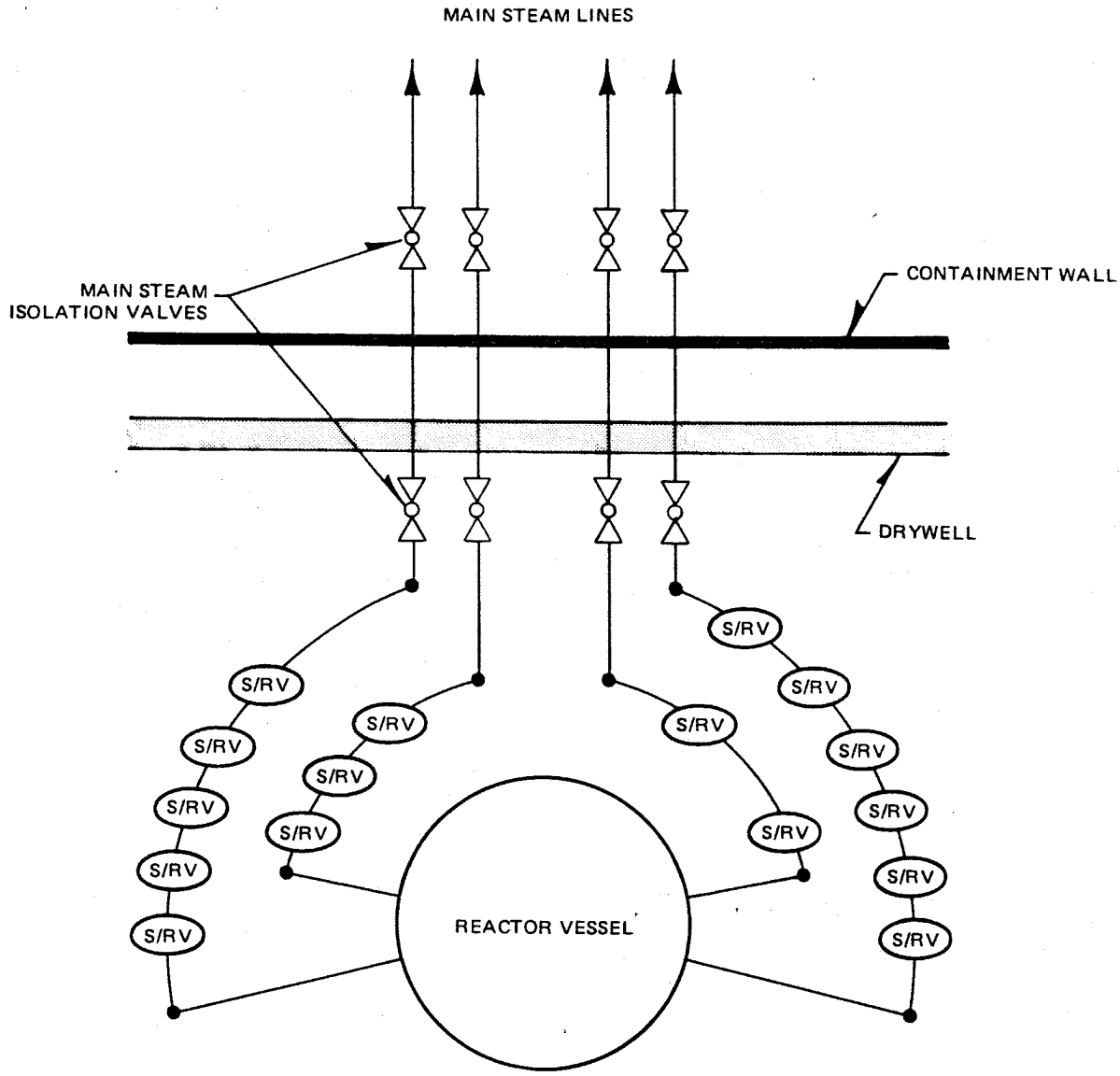

Figure 5.2-8. Safety/Relief Valve and Steamline Schematic

FIGURE 5.2-9

HAS BEEN DELETED

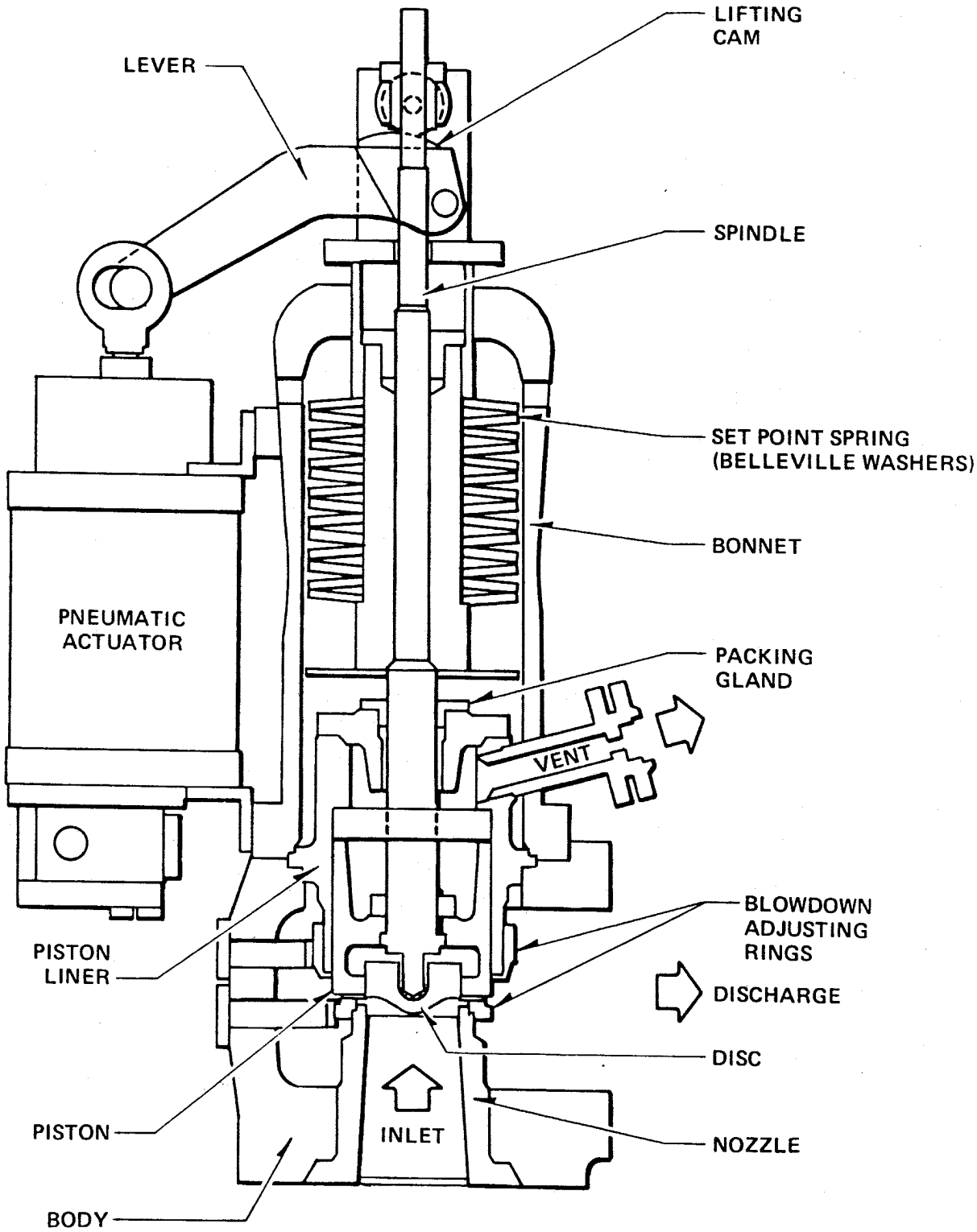

Figure 5.2-10. Schematic of Safety/Relief Valve with Auxiliary Actuating Device

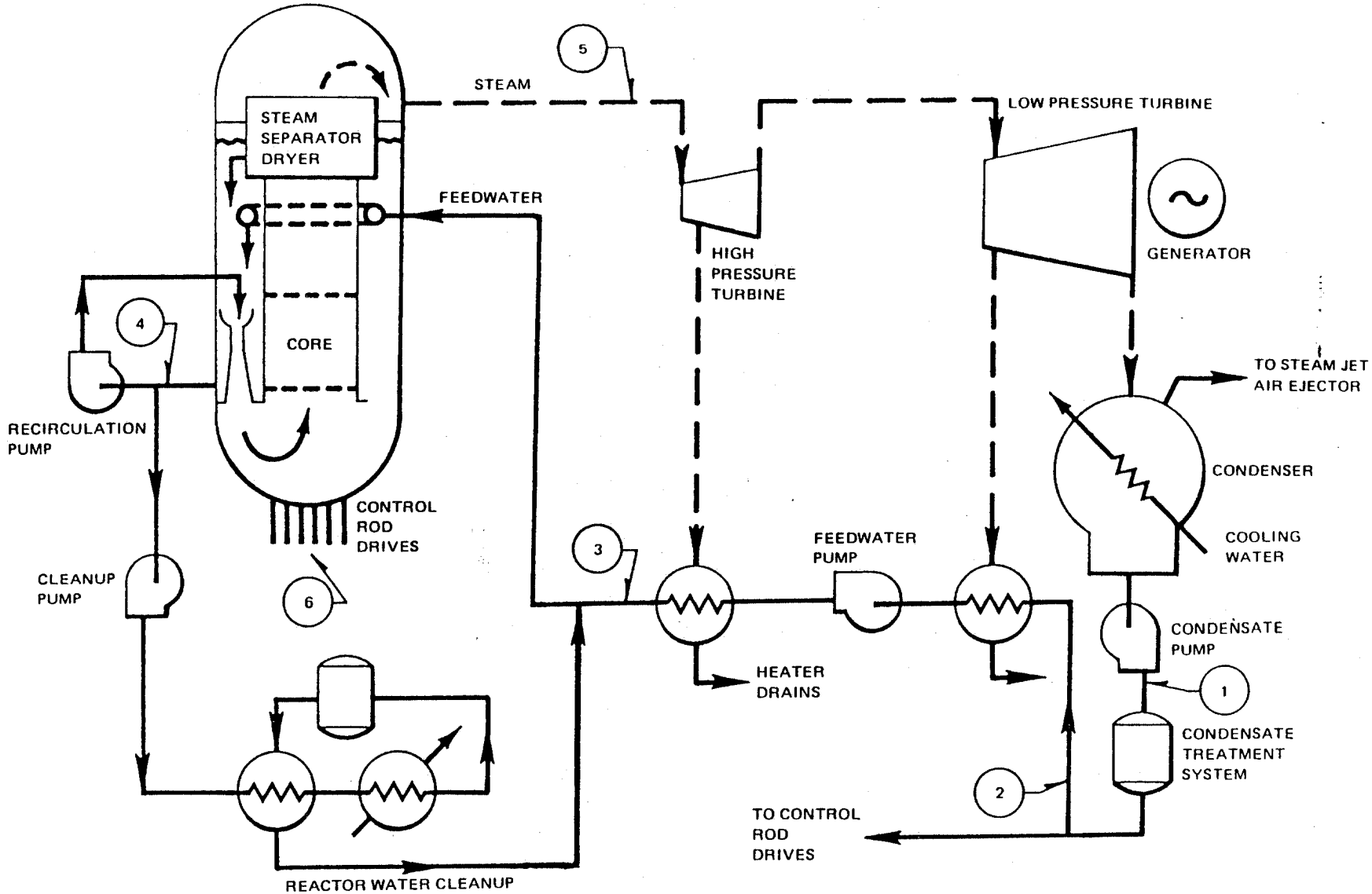

Figure 5.2-11. Typical BWR Flow Diagram.

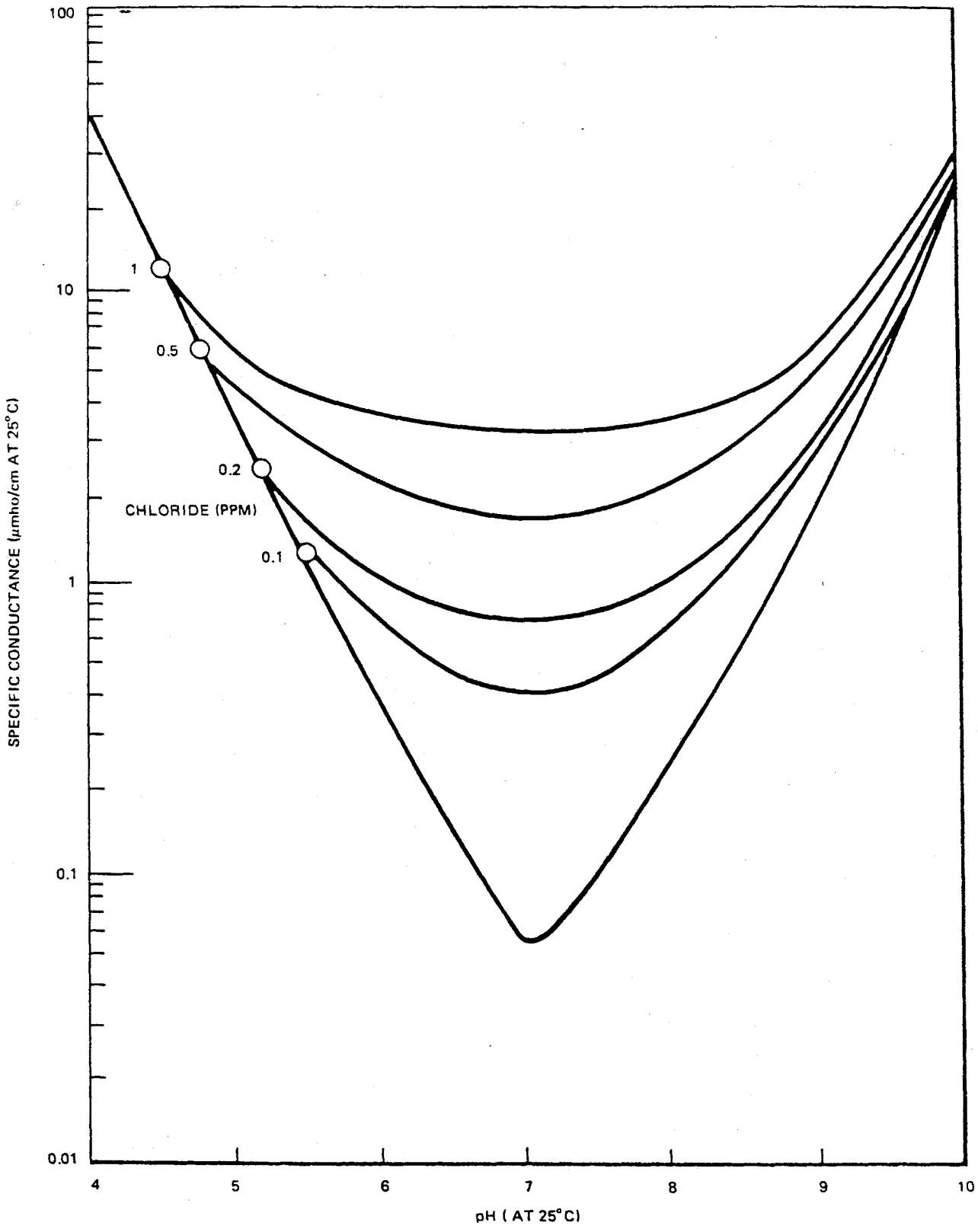

Figure 5.2-12. Conductance vs pH as a Function of Chloride Concentration of Aqueous Solution at 25°C.

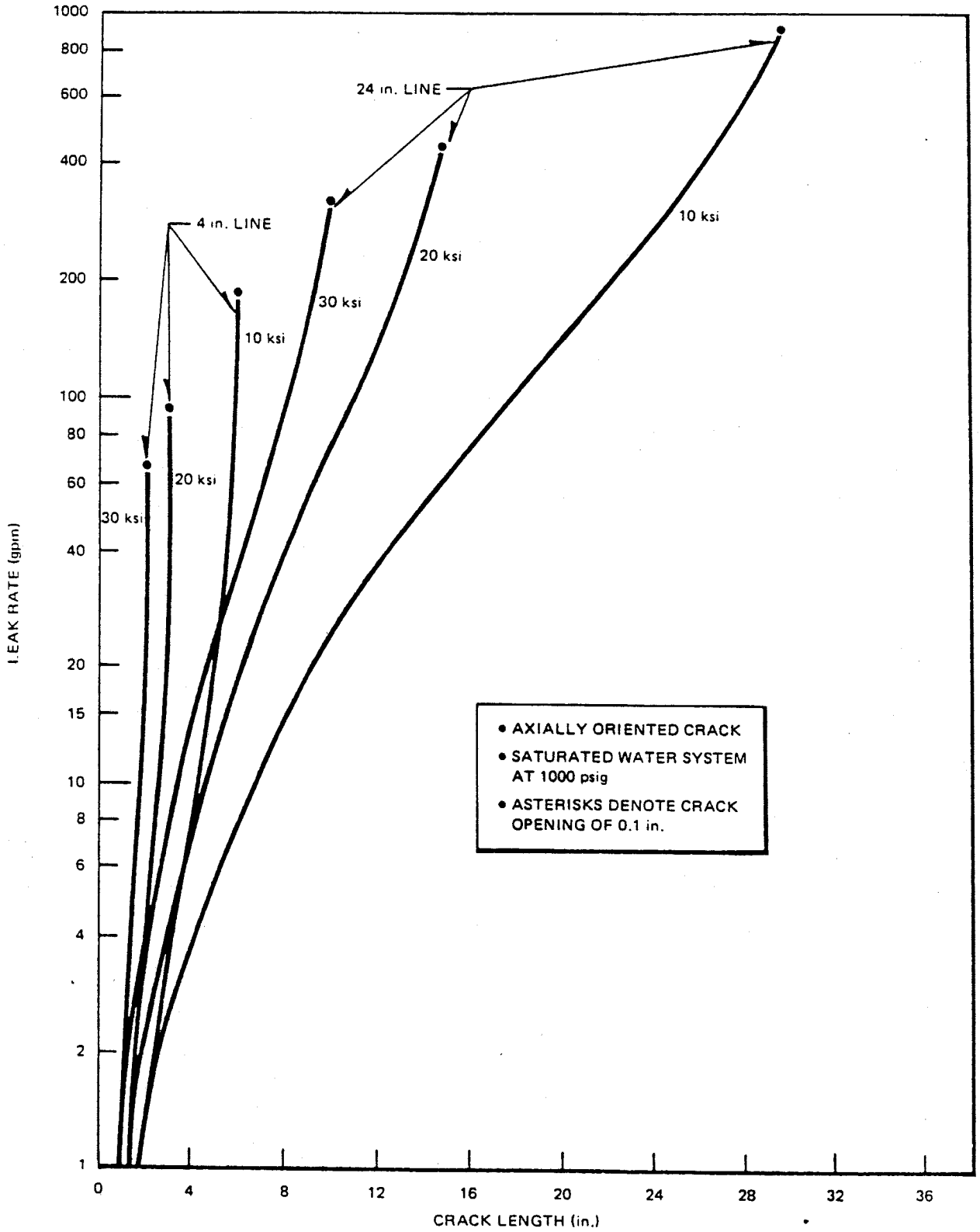

Figure 5.2-13. Calculated Leak Rate vs Crack Length as a Function of Applied Hoop Stress.

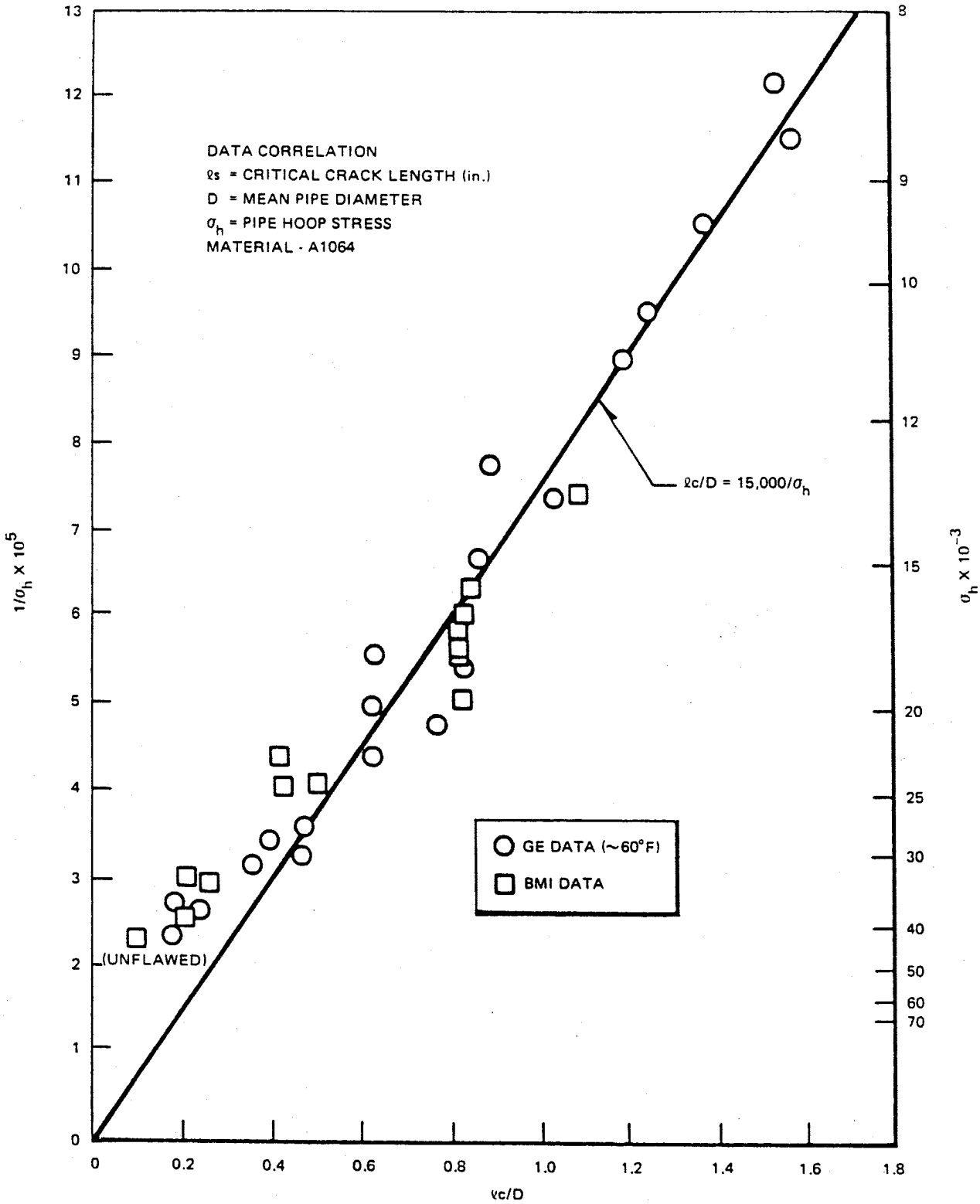

Figure 5.2-14. Axial Throughwall Crack Length Data Correlation.

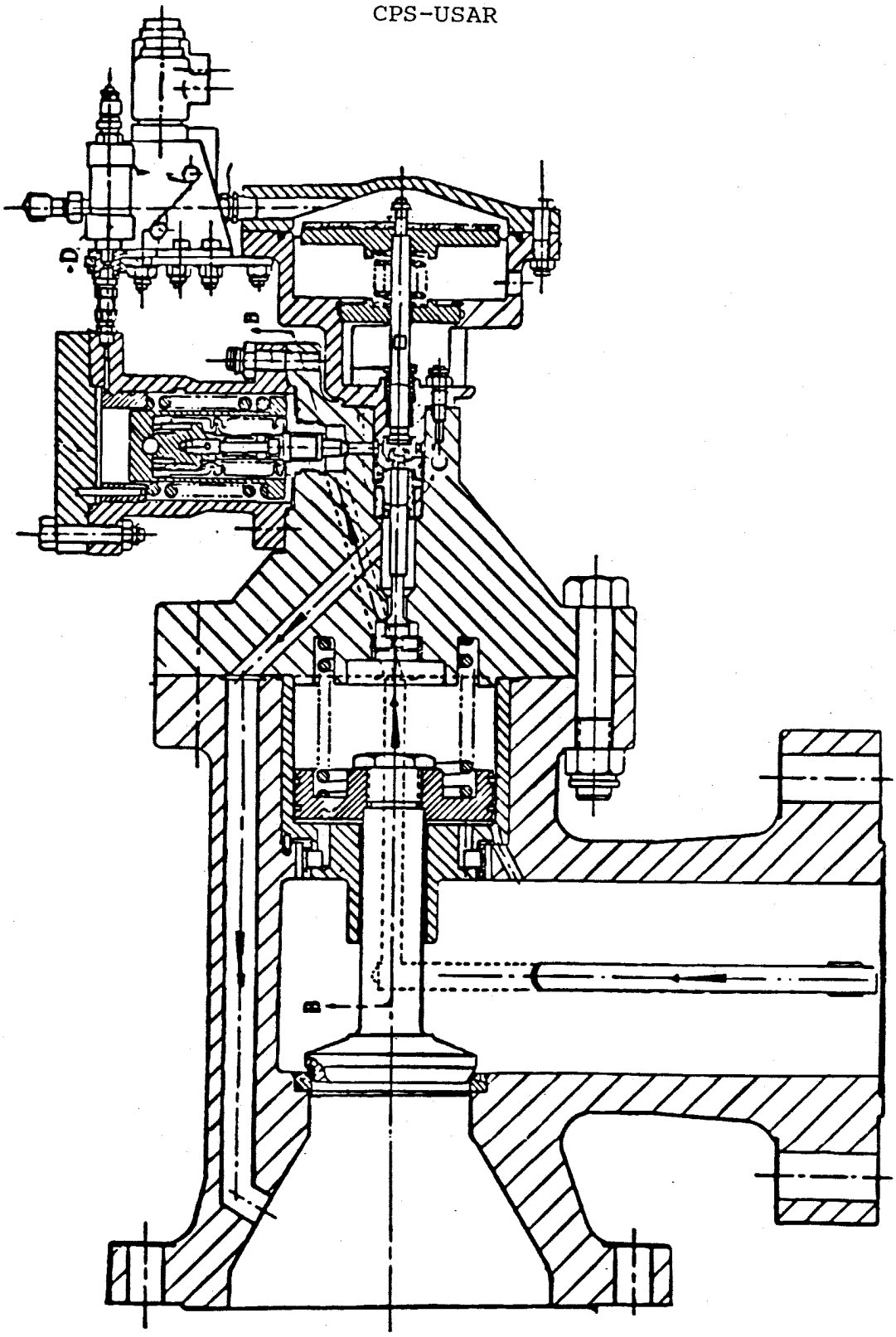

FIGURE 5.2-15

CROSS-SECTION VIEW OF
VALVE-OPERATING BWRS

Figure 5.2-16
Deleted

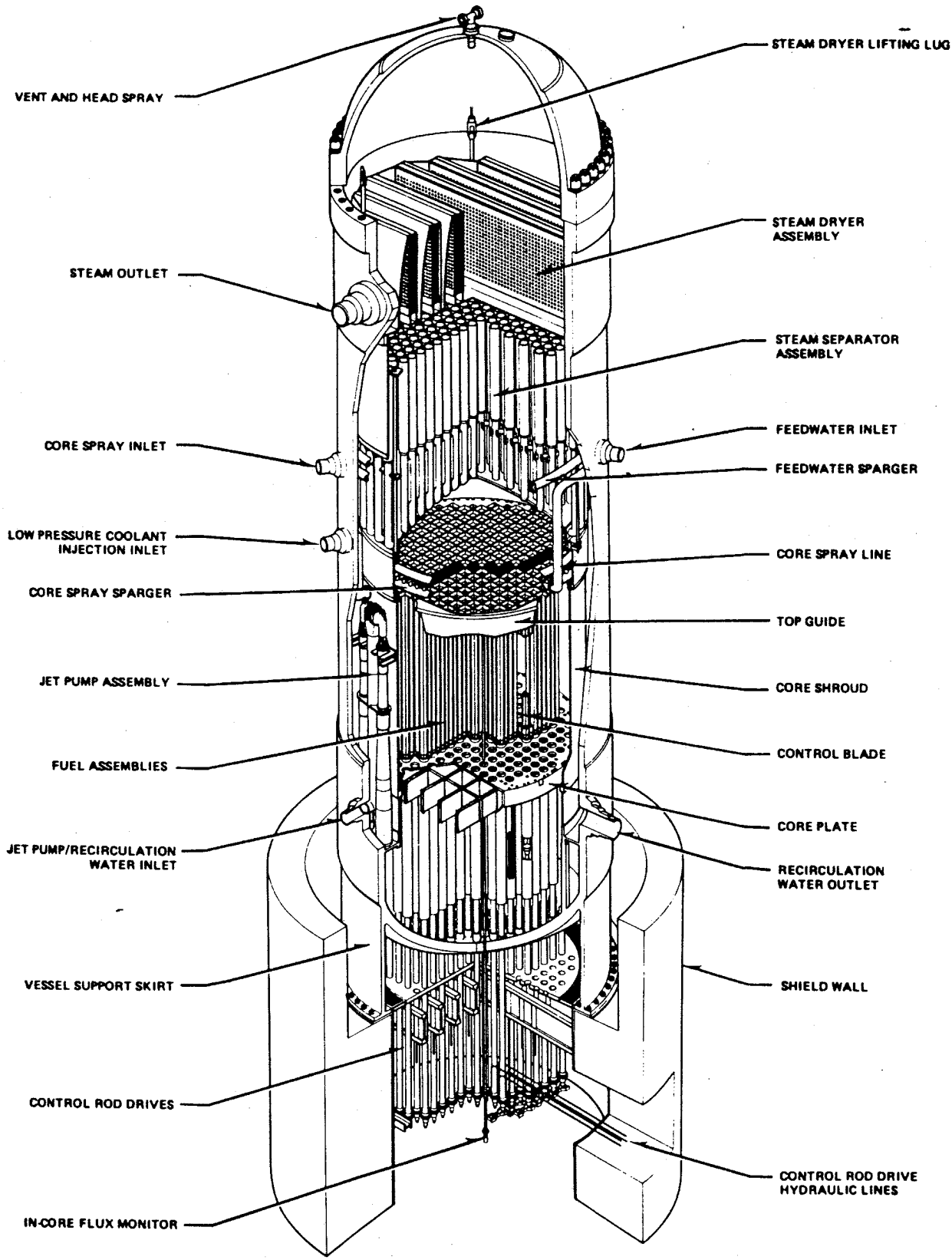

Figure 5.3-1. Reactor Vessel Cutaway Diagram

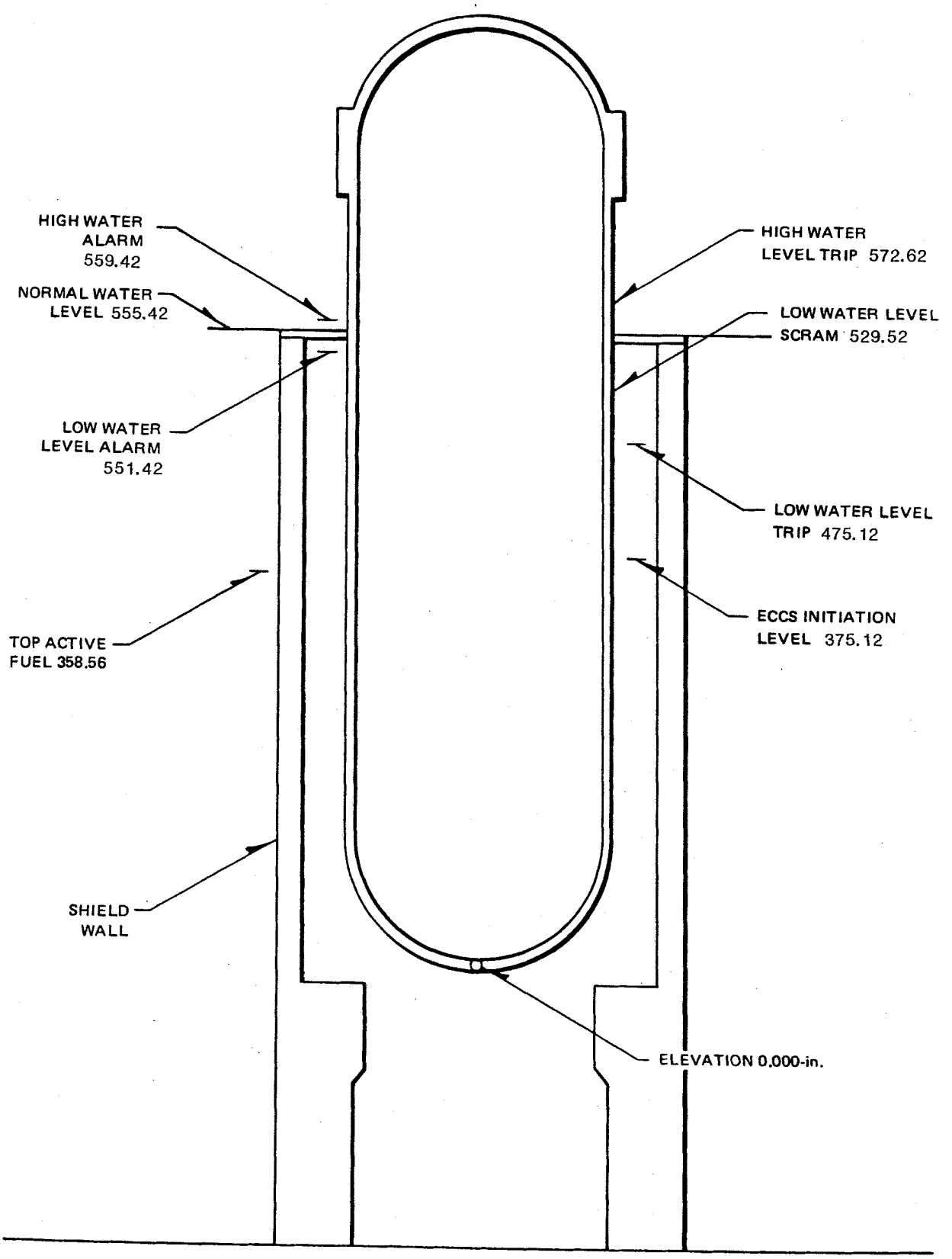

Figure 5.3-2. Reactor Vessel Nominal Water Level Trip and Alarm Elevations

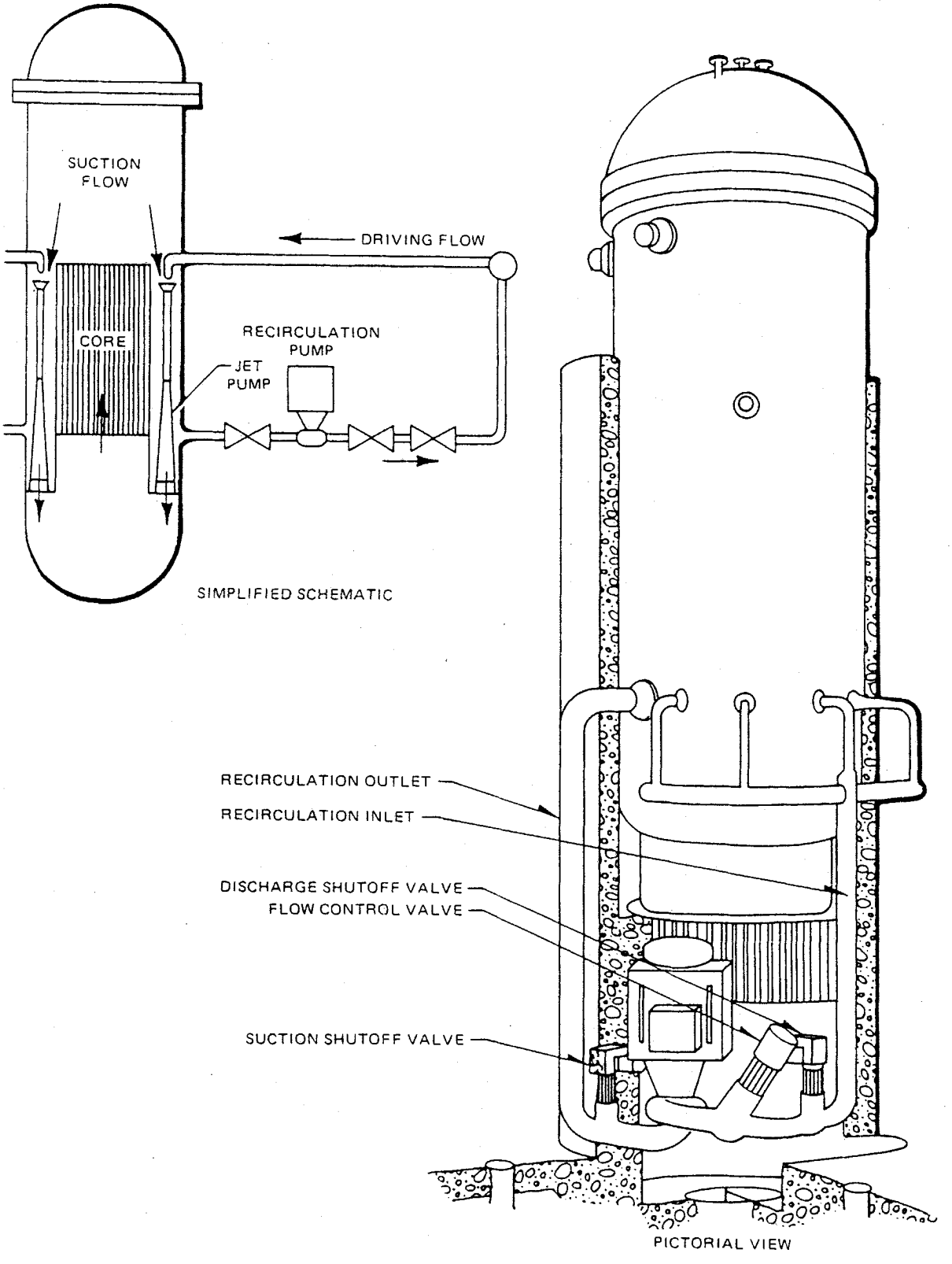

Figure 5.4-1. Recirculation System Elevation and Isometric

Figure 5.4-2
Deleted

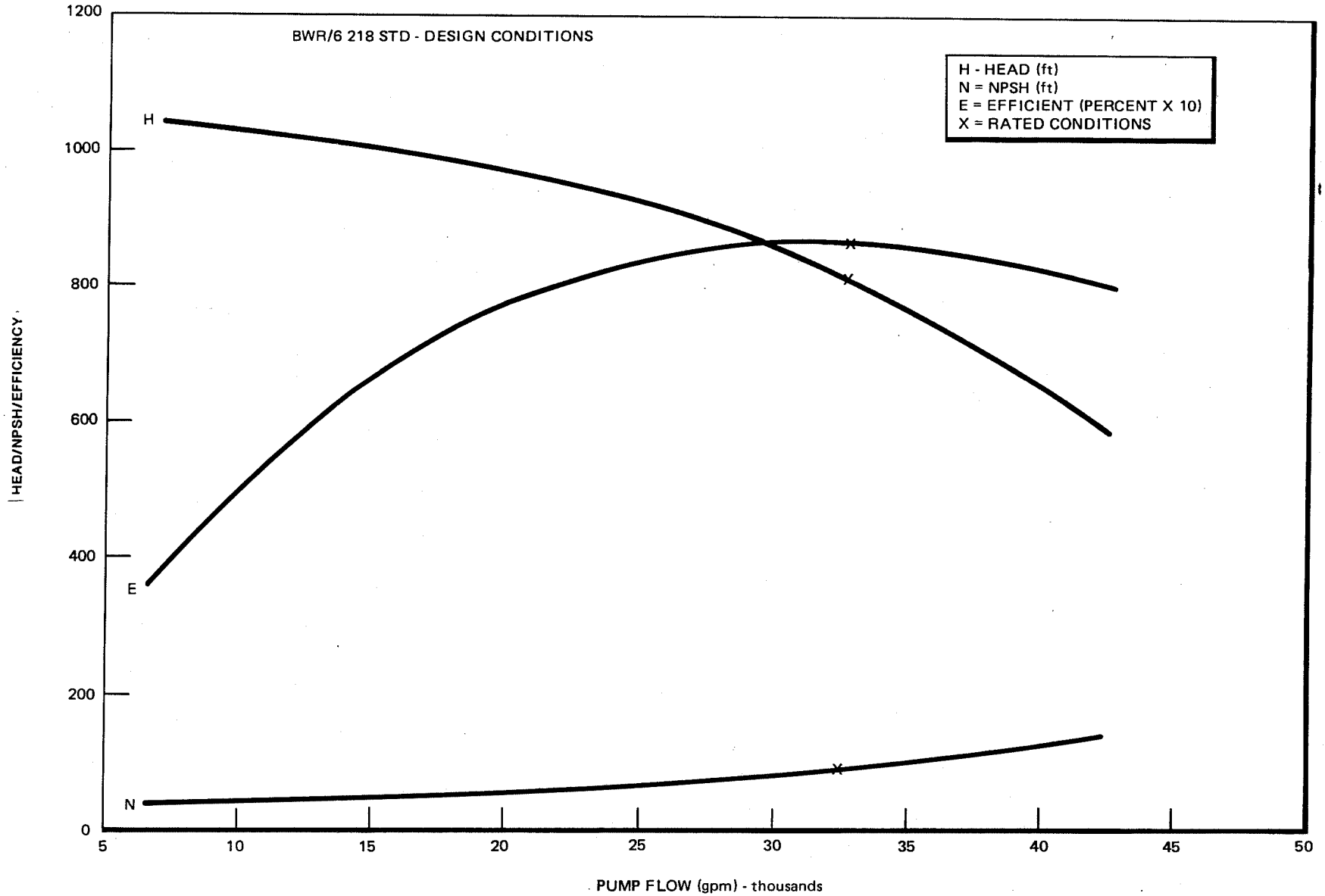

Figure 5.4-3 Recirculation Pump Head, NPSH and Efficiency vs. Flow Curves

FIGURE 5.4-4

HAS BEEN DELETED

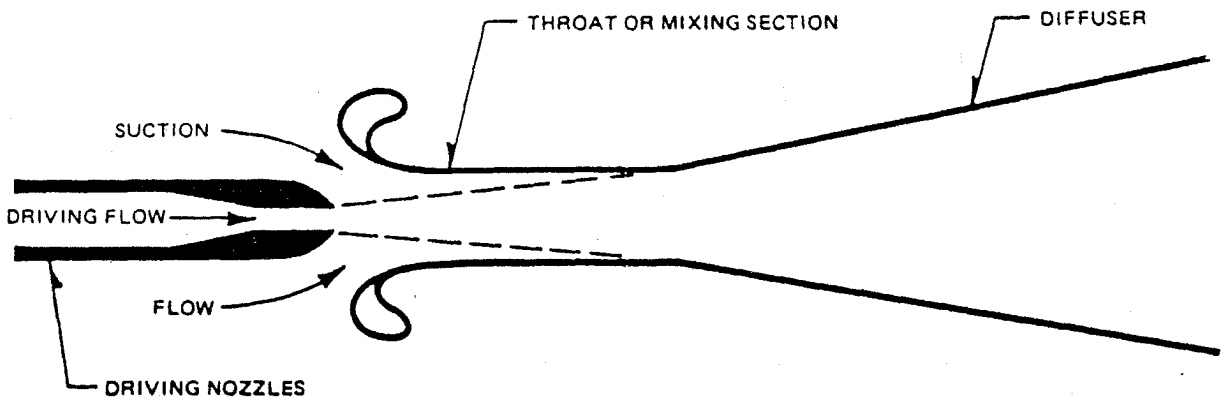

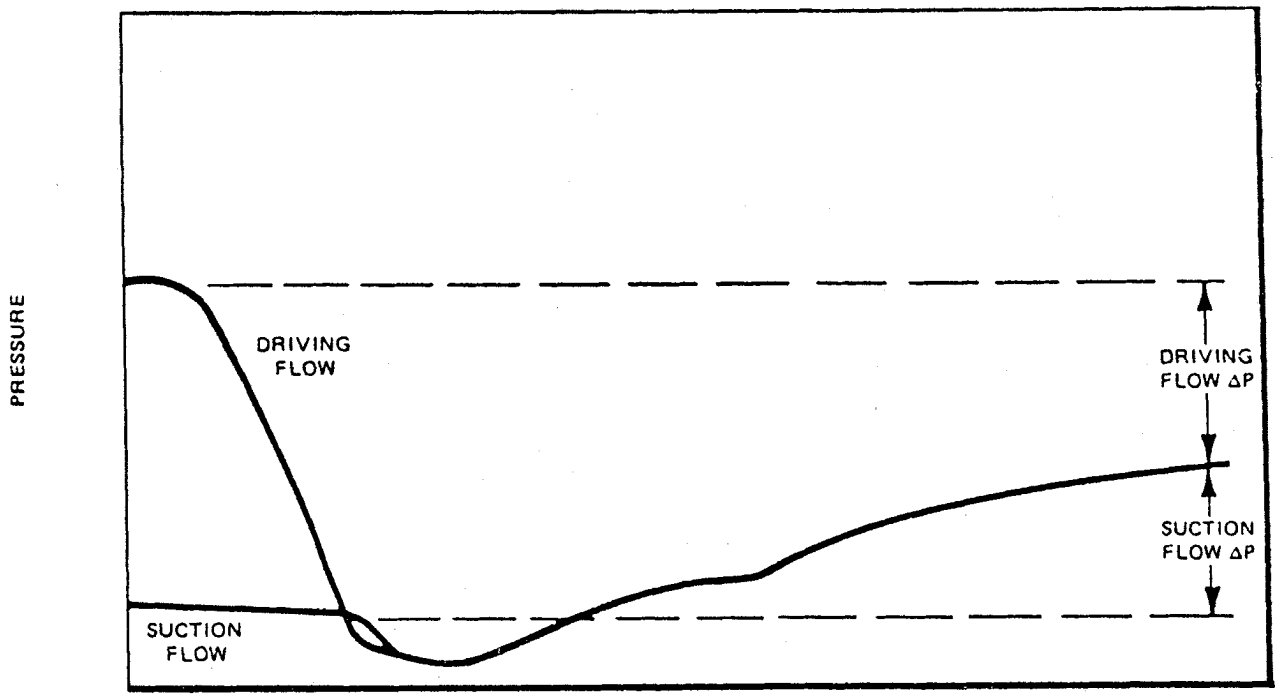

Figure 5.4-5. Operating Principle of Jet Pump

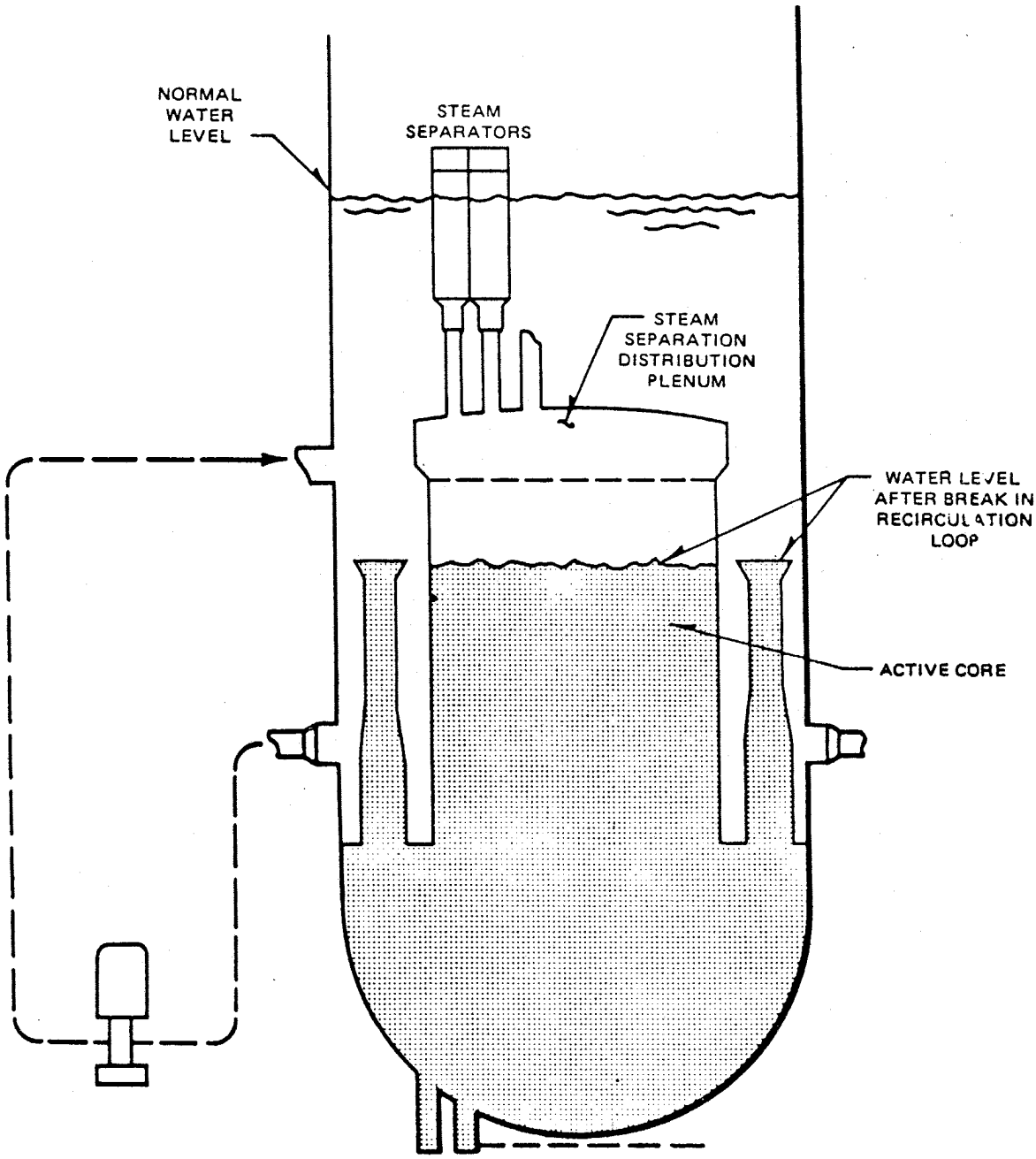

Figure 5.4-6. Core Flooding Capability of Recirculation System

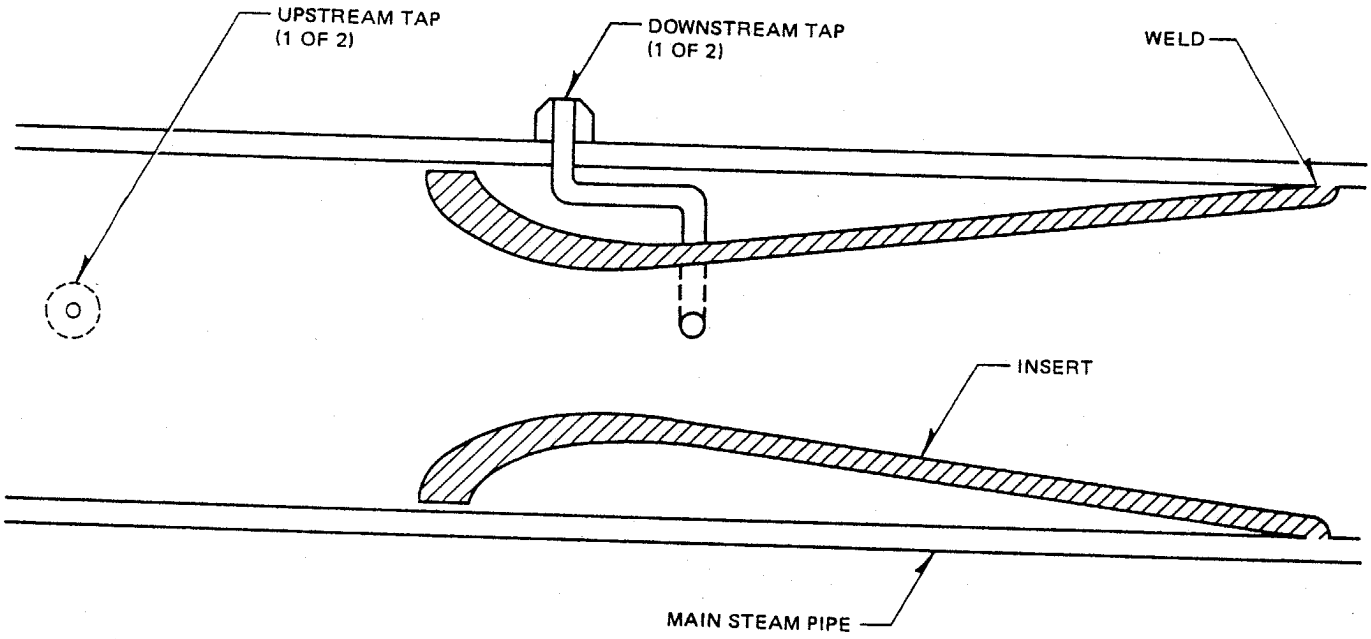

Figure 5.4-7. Main Steamline Flow Restrictor

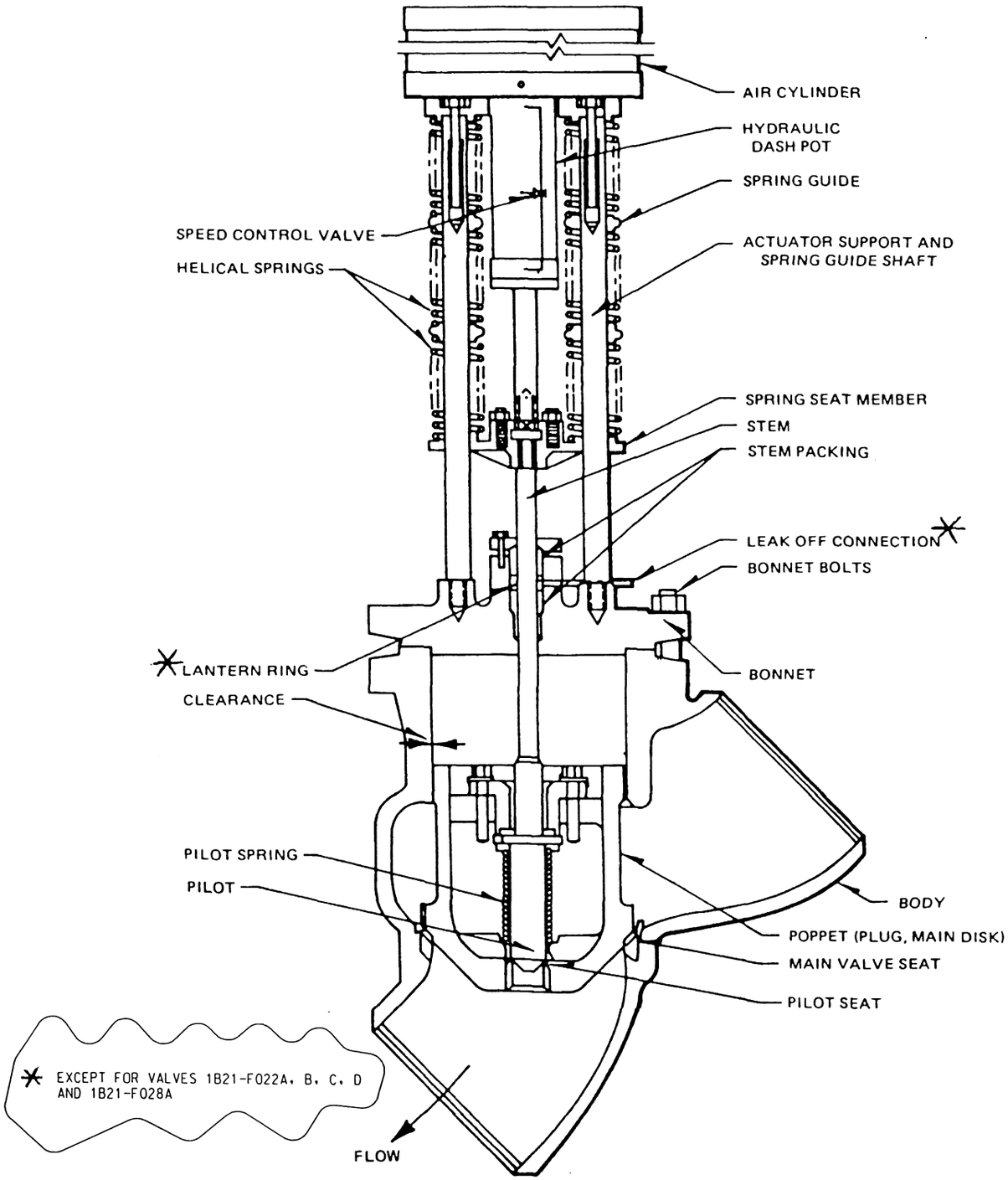

Figure 5.4-8. Main Steamline Isolation Valve

Figures 5.4-9 and 5.4-10
Deleted

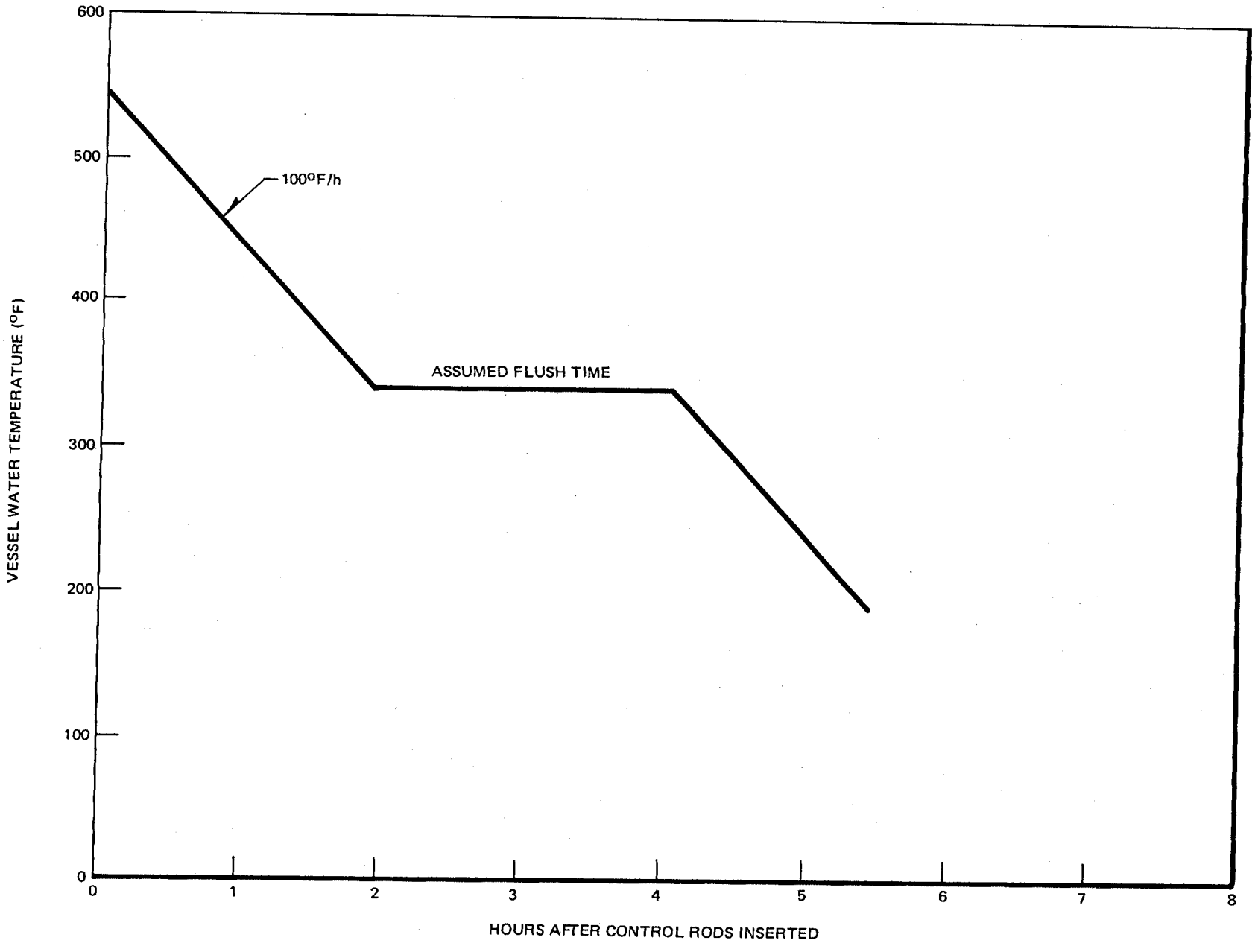

Figure 5.4-11. Vessel Coolant Temperature Versus Time (Two Heat Exchangers Available)

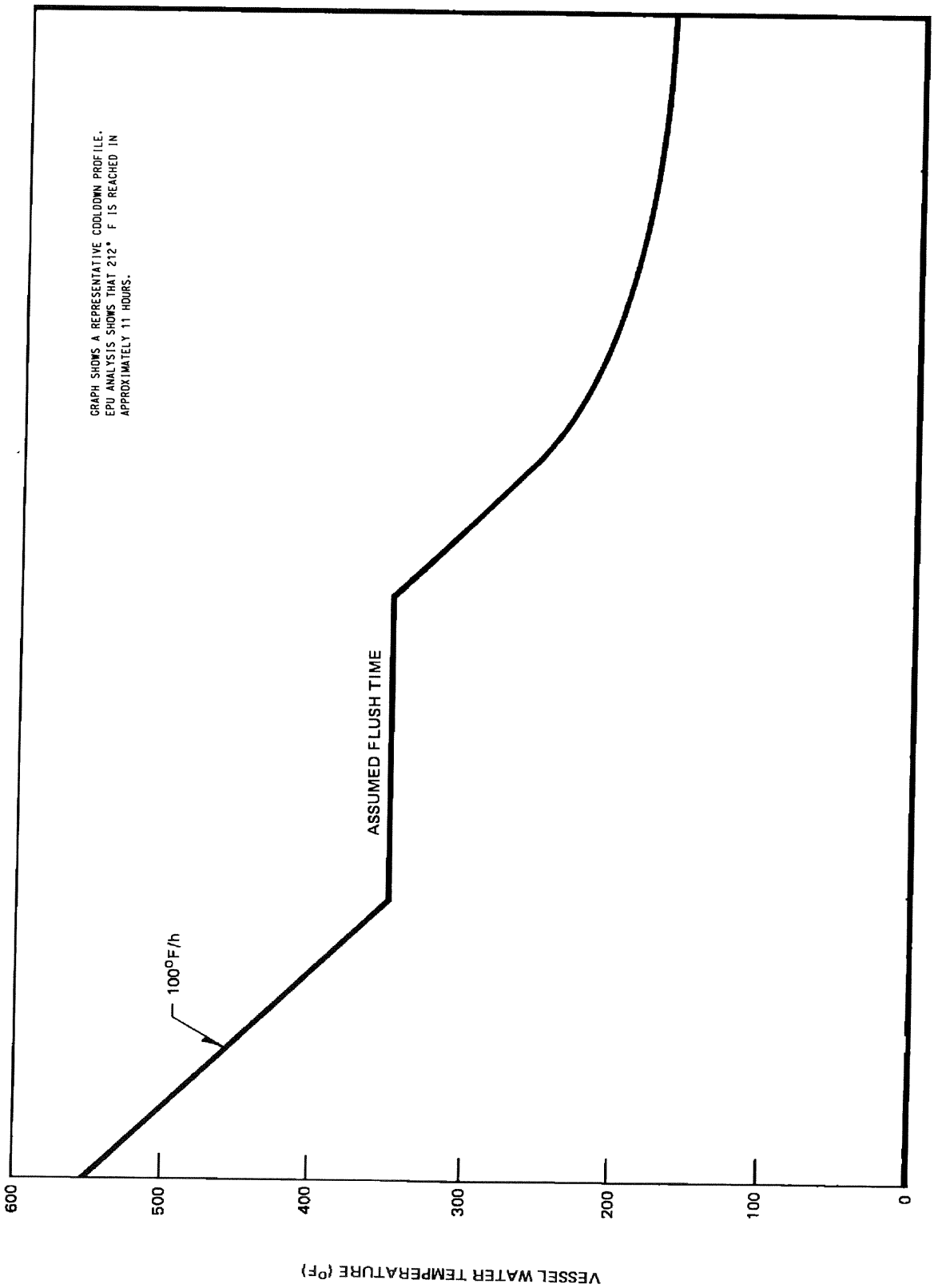

Figure 5.4-12. Vessel Coolant Temperature Versus Time (One Heat Exchanger Available)

Figures 5.4-13 and 5.4-14
Deleted

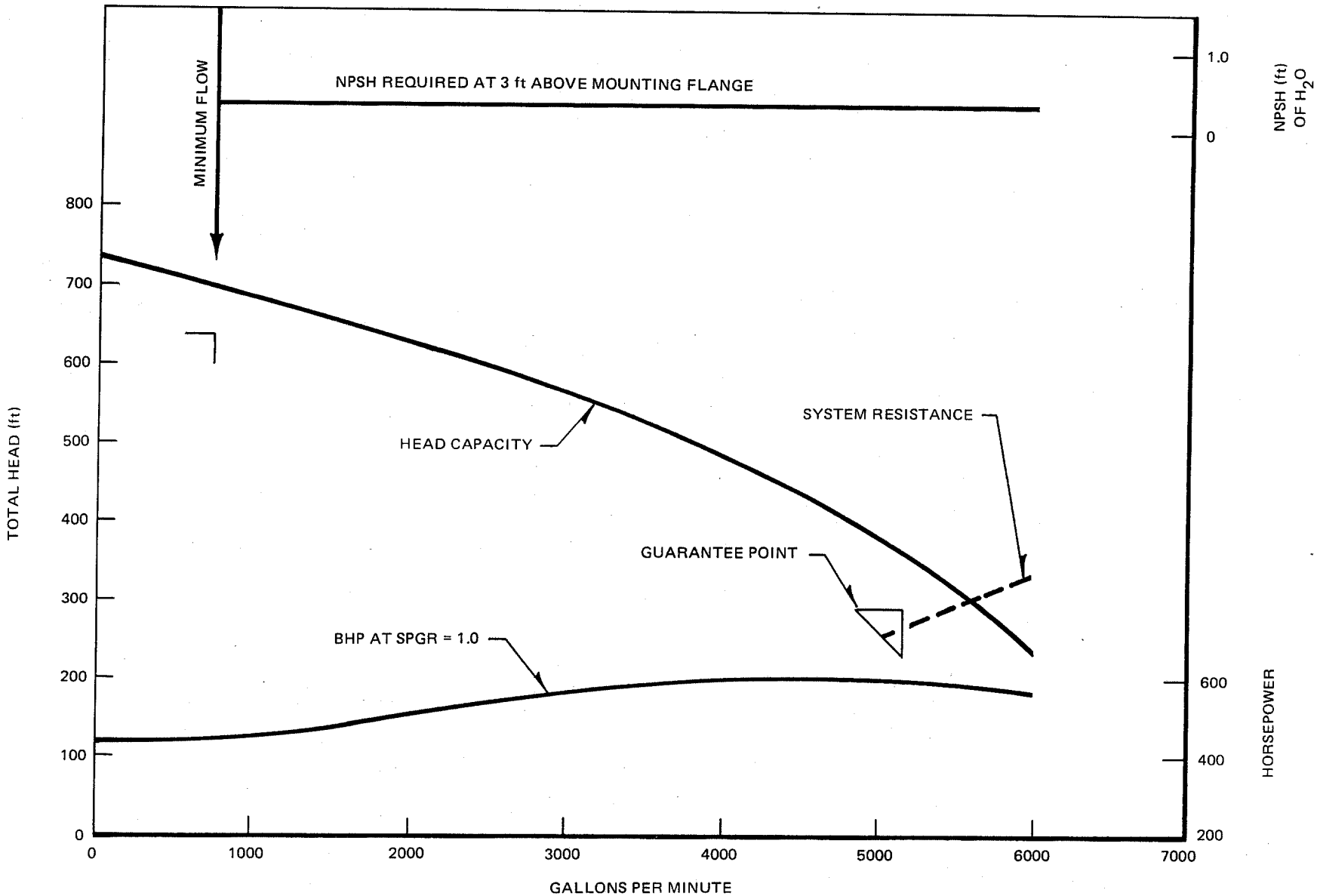

Figure 5.4-15. RHR Pump Characteristic Curve

Figures 5.4-16 through 5.4-19
Deleted

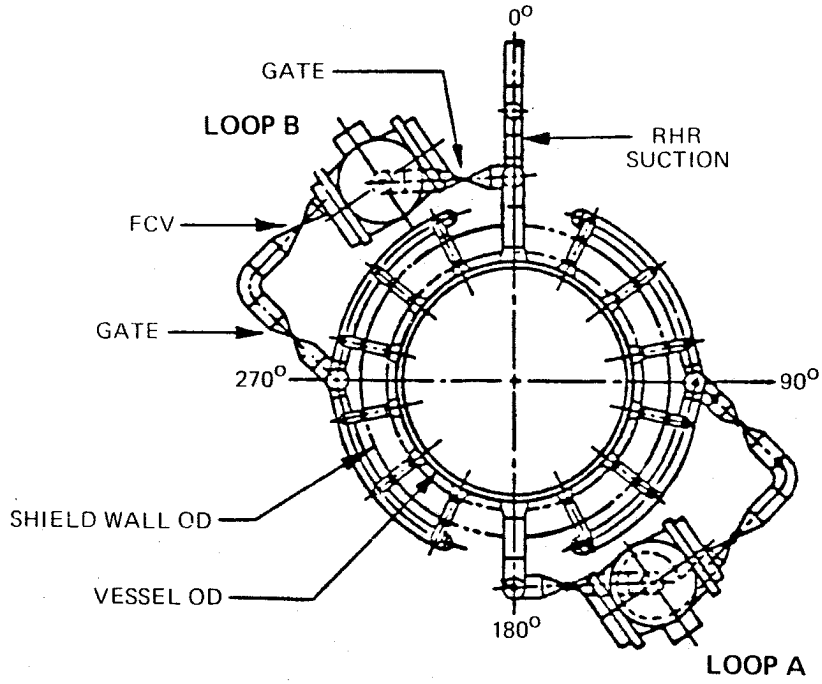

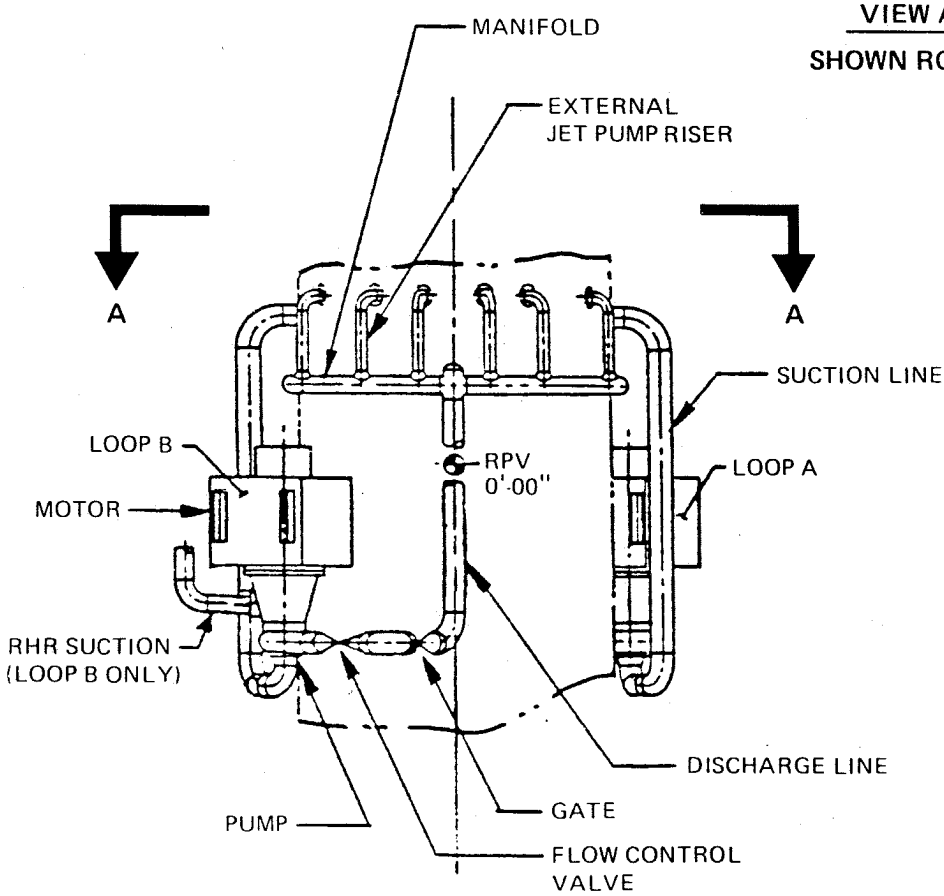

Figure 5.4-20 Recirculation System External Loop Piping Layout

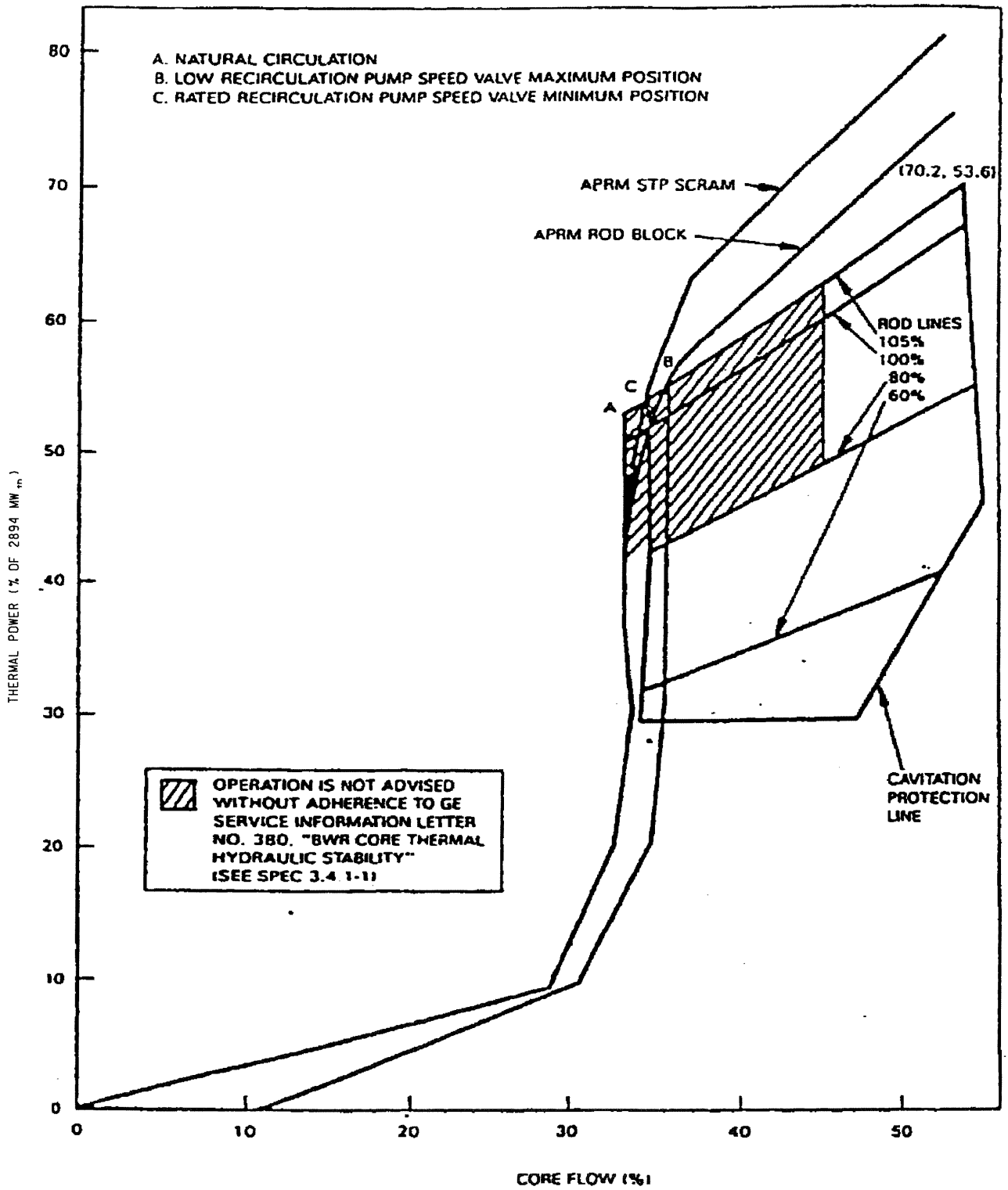

CLINTON POWER STATION
UPDATED SAFETY ANALYSIS REPORT

FIGURE 5.4-21

ONE PUMP OPERATION MAP

FIGURE 5.4-22

HAS BEEN DELETED

REVISION 10
OCTOBER 2001

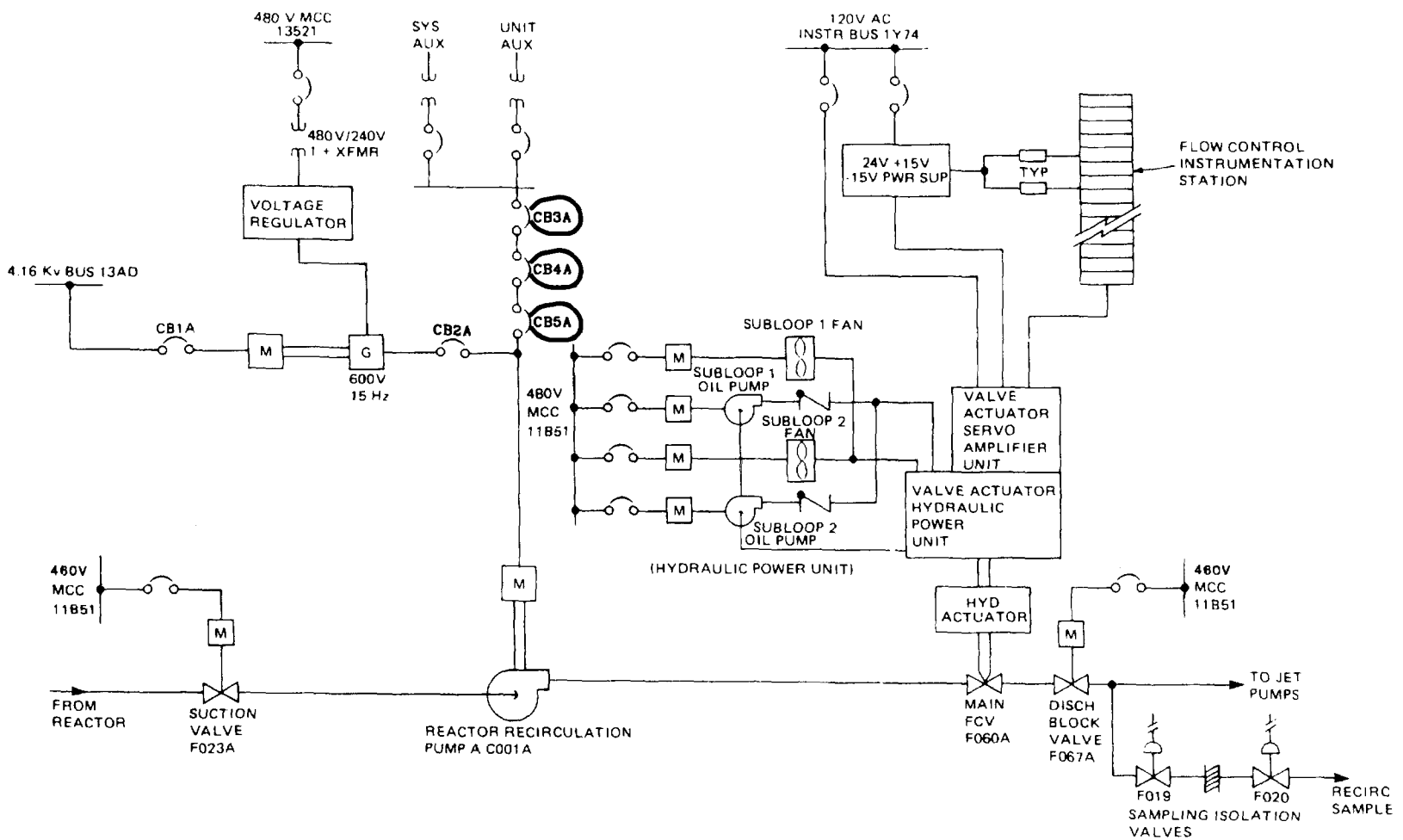

CLINTON POWER STATION
UPDATED SAFETY ANALYSIS REPORT

FIGURE 5.4-23
TYPICAL POWER SUPPLY DEVELOPMENT
"A" RECIRCULATION LOOP

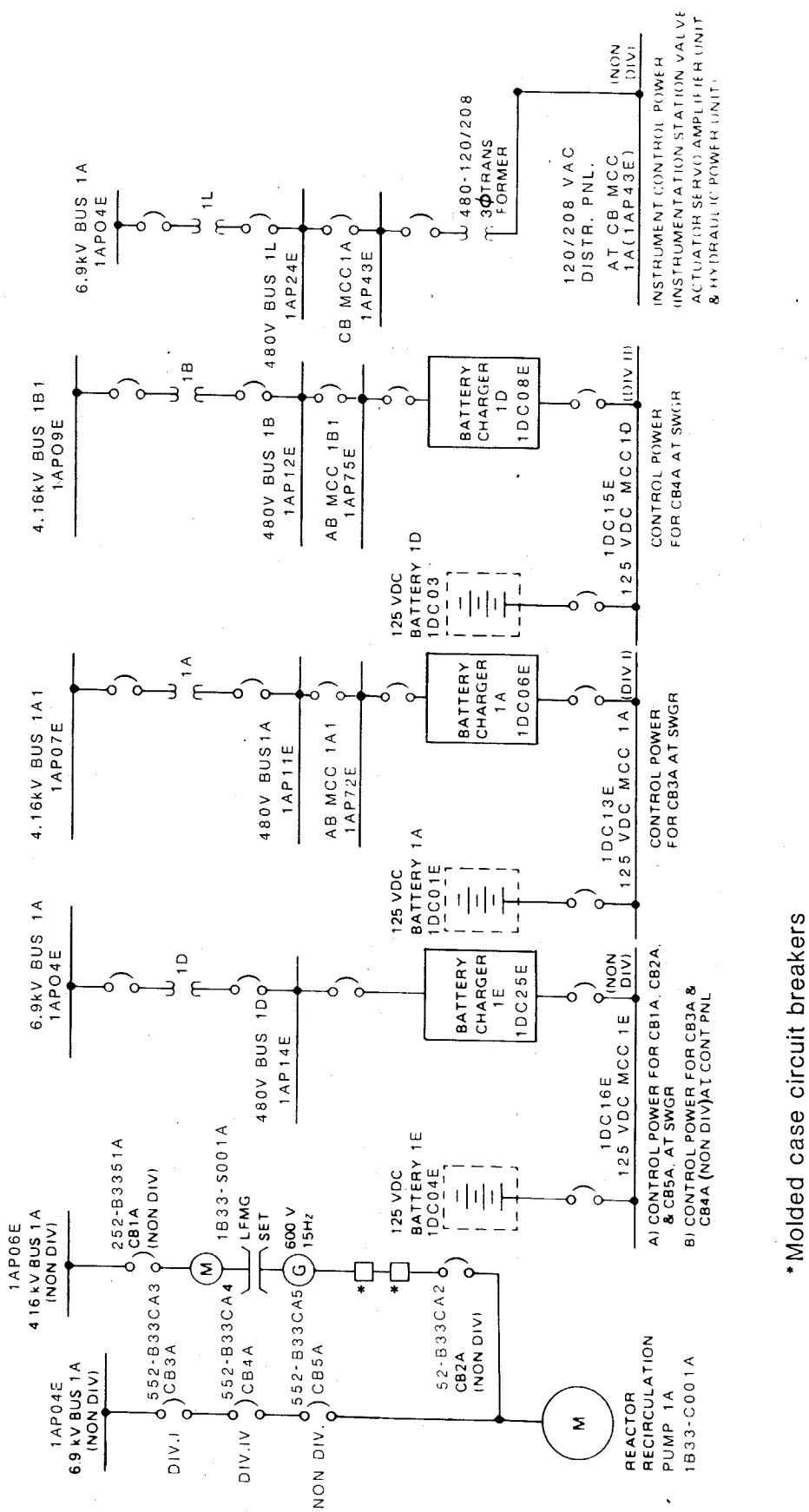

Figure 5.4-24

Layout of Auxiliary Power System for Reactor Recirculation System Pump "A"