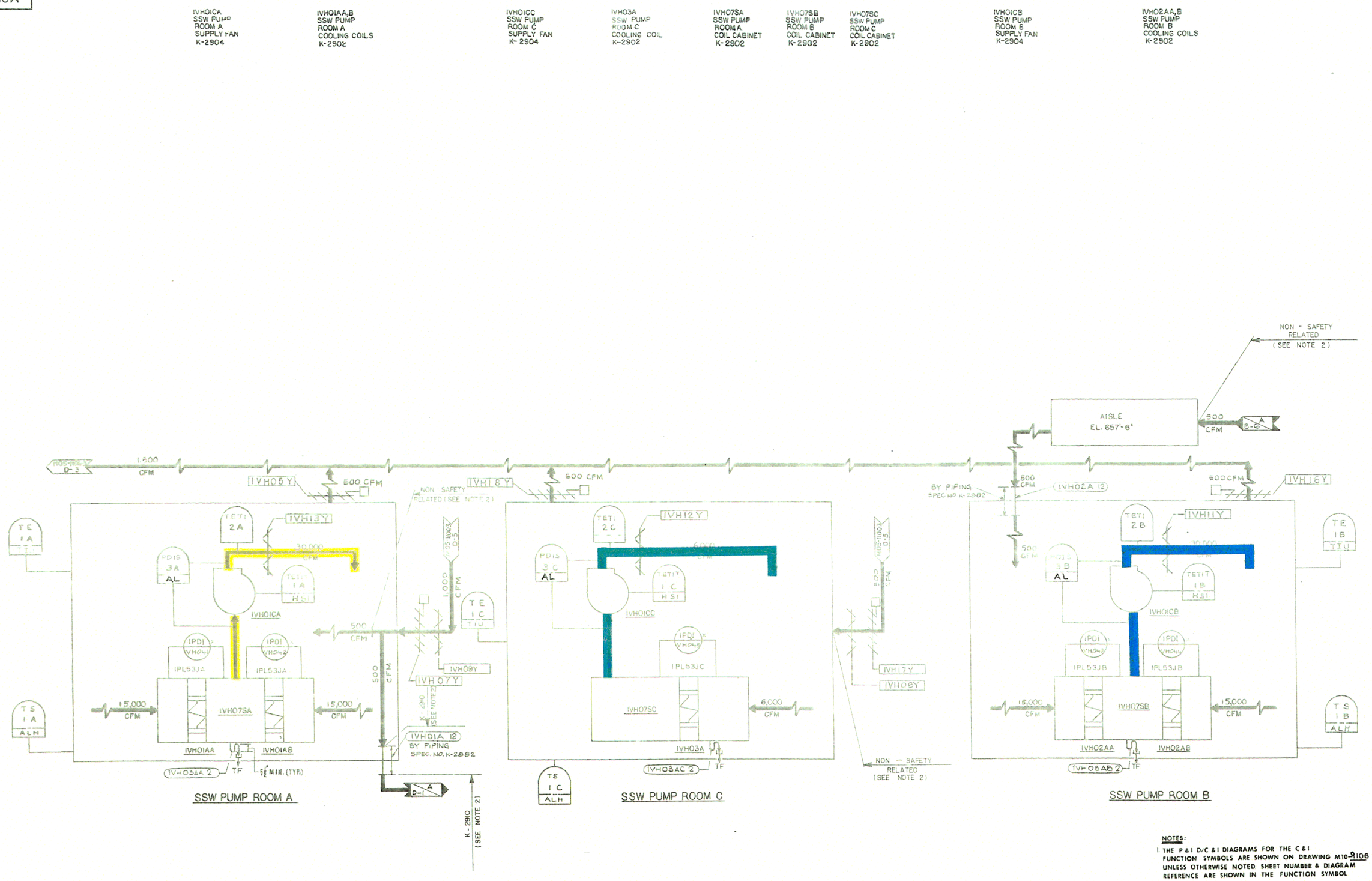

NUCLEAR SAFETY RELATED
ITEMS ARE SHOWN ON THIS DRAWING
(FOR SAFETY CLASSIFICATION SEE PIPING, EQUIPMENT, VALVE, OR INSTRUMENT LISTS.)

NOTES:

1. THE P & I D/C & I DIAGRAMS FOR THE C & I FUNCTION SYMBOLS ARE SHOWN ON DRAWING M10-9106 UNLESS OTHERWISE NOTED SHEET NUMBER & DIAGRAM REFERENCE ARE SHOWN IN THE FUNCTION SYMBOL
2. NUCLEAR SAFETY-RELATED DUCTWORK SYSTEM IS SHOWN ON THIS P & ID. THIS CLASSIFICATION APPLIES TO DUCTWORK AND DUCTWORK ACCESSORIES (EXCEPT DAMPERS) FURNISHED, FABRICATED AND INSTALLED UNDER SPECIFICATION K-2910. FOR SAFETY CLASSIFICATION OF DUCTWORK SUPPORTS, SEE SUPPORT DRAWINGS. FOR SAFETY CLASSIFICATION OF EQUIPMENT, SEE EQUIPMENT LIST. FOR SAFETY CLASSIFICATION OF PIPING/VALVES SEE LINE/VALVE LIST. FOR SAFETY CLASSIFICATION OF DAMPERS, SEE APPROPRIATE DAMPER LIST.

CLINTON POWER STATION
UPDATED SAFETY ANALYSIS REPORT

FIGURE 3.6-1
DIVISIONAL SEPARATION AND
HIGH-ENERGY P&ID'S-
SHUTDOWN SERVICE WATER VENTILATION
SHEET 95 OF 111

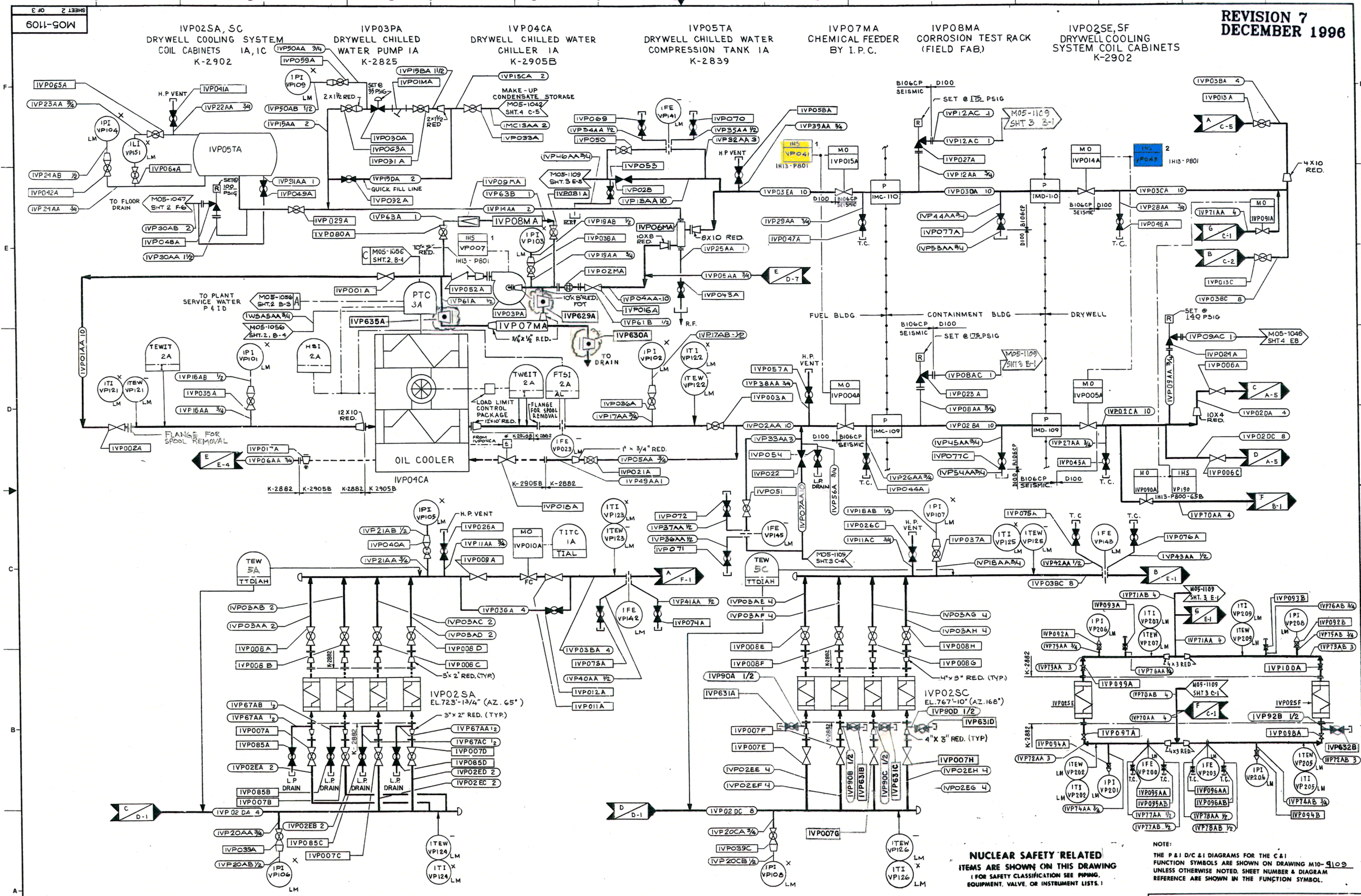

CLINTON POWER STATION
UPDATED SAFETY ANALYSIS REPORT

FIGURE 3.6-1
DIVISIONAL SEPARATION AND
HIGH-ENERGY P&ID'S-
DRYWELL COOLING CHILLED WATER SYSTEM
SHEET 96 OF 111

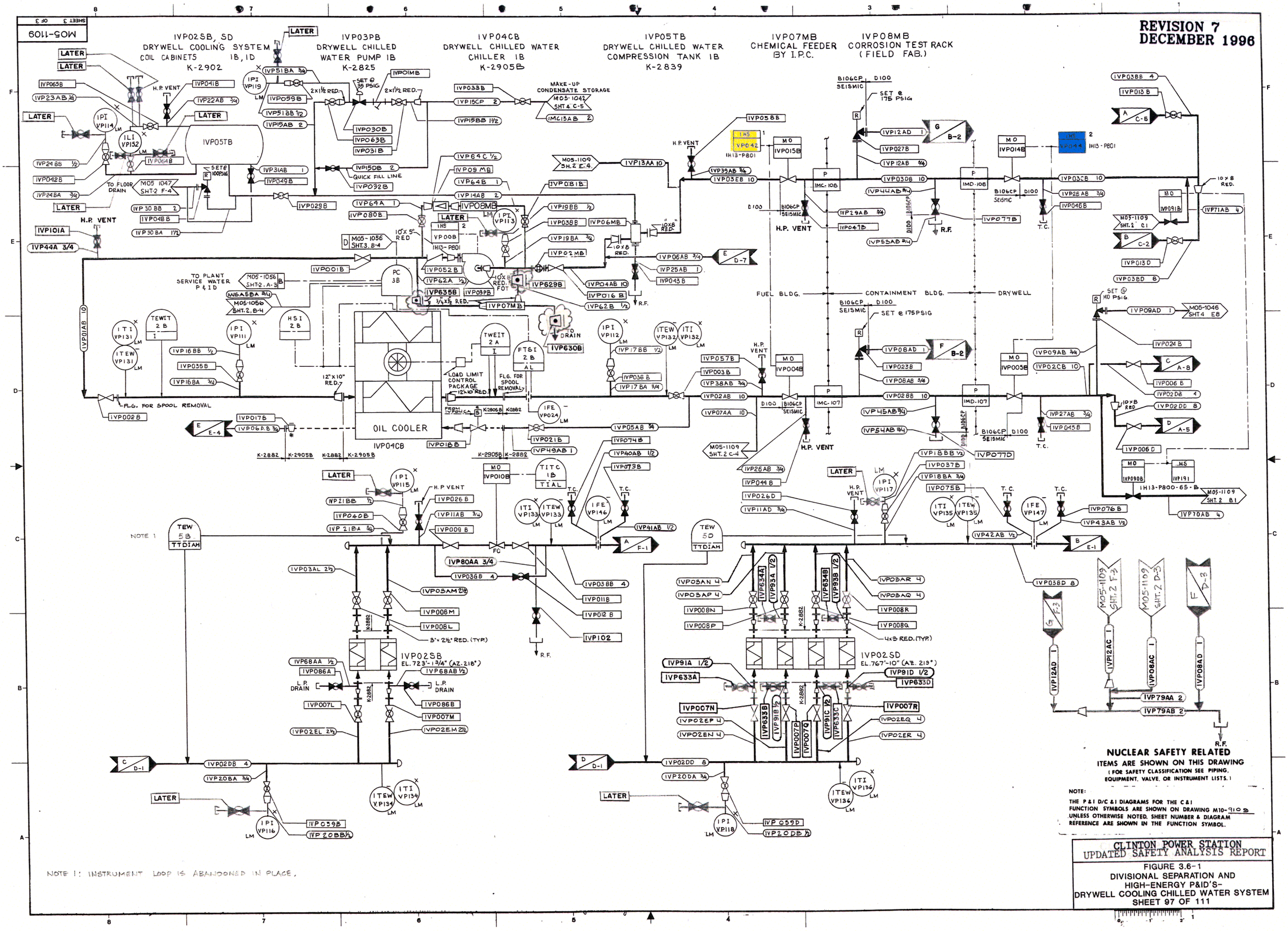

CLINTON POWER STATION
UPDATED SAFETY ANALYSIS REPORT

FIGURE 3.6-1
DIVISIONAL SEPARATION AND
HIGH-ENERGY P&ID'S-
DRYWELL COOLING CHILLED WATER SYSTEM
SHEET 97 OF 111

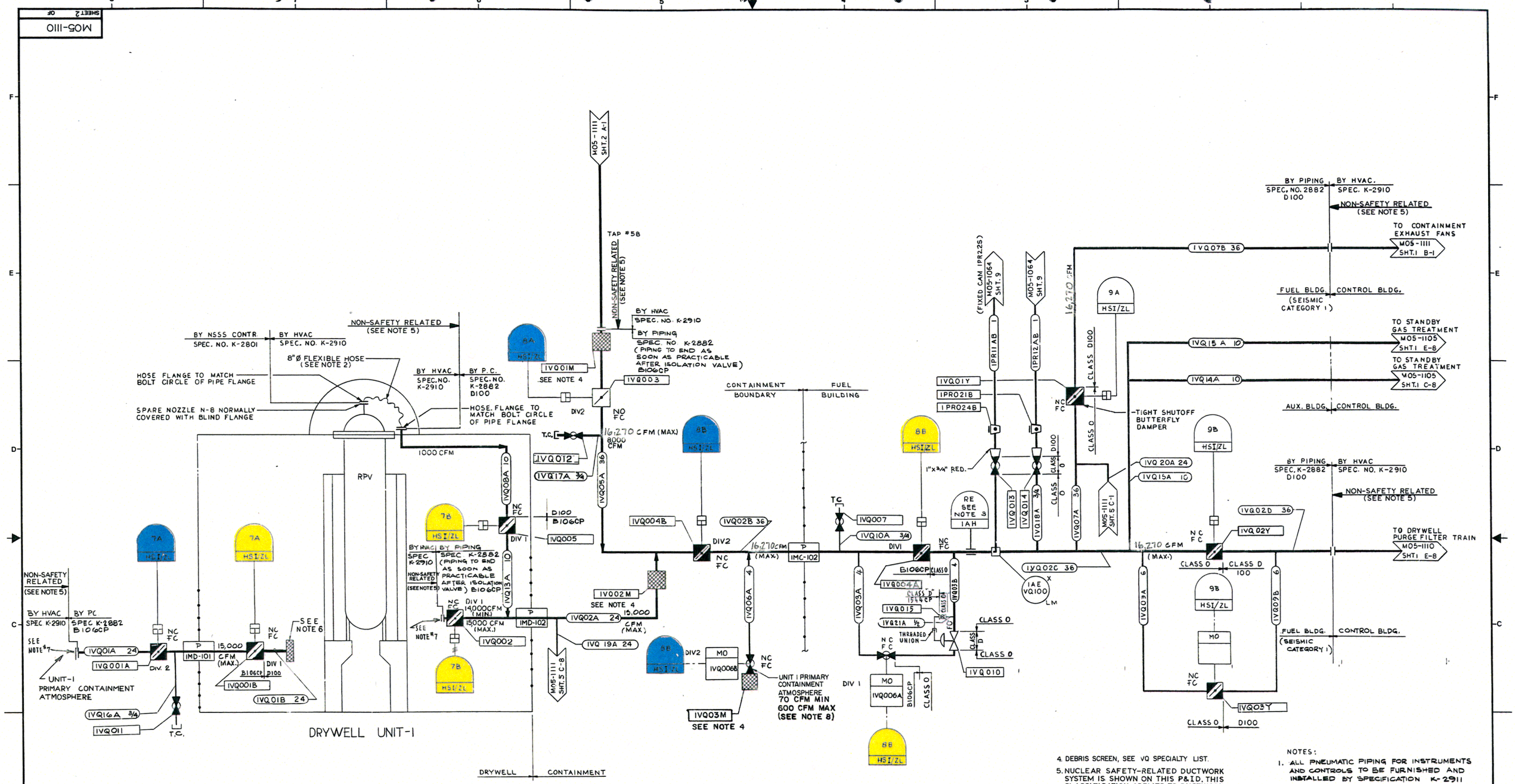

4. DEBRIS SCREEN, SEE VQ SPECIALTY LIST.
5. NUCLEAR SAFETY-RELATED DUCTWORK SYSTEM IS SHOWN ON THIS P&ID. THIS CLASSIFICATION APPLIES TO DUCTWORK AND DUCTWORK ACCESSORIES (EXCEPT DAMPERS) FURNISHED, FABRICATED AND INSTALLED UNDER SPECIFICATION K-2910. FOR SAFETY CLASSIFICATION OF DUCTWORK SUPPORTS, SEE SUPPORT DRAWINGS. FOR SAFETY CLASSIFICATION OF EQUIPMENT, SEE EQUIPMENT LIST. FOR SAFETY CLASSIFICATION OF PIPING/VALVES, SEE LINE/VALVE LIST. FOR SAFETY CLASSIFICATION OF DAMPERS, SEE APPROPRIATE DAMPER LIST.
6. PERSONNEL PROTECTION SCREEN.
7. FOR INTAKE WIRE MESH CONNECTION TO EXISTING PIPE FLANGE DETAIL REFER TO DWG. M14-1044-6.
8. 70 CFM MIN./600 CFM MAX DURING POST LOCA PURGE OF PRIMARY CONTAINMENT.

NOTES:
1. ALL PNEUMATIC PIPING FOR INSTRUMENTS AND CONTROLS TO BE FURNISHED AND INSTALLED BY SPECIFICATION K-2911 CONTRACTOR.
2. 8" DIA. FLEXIBLE HOSE SHALL BE CONNECTED TO REACTOR NOZZLE N-8 FOR PURGING OF REACTOR VESSEL HEAD DURING SHUTDOWN. THIS CONNECTION TO BE MADE AS QUICKLY AS POSSIBLE AFTER REMOVAL OF BLIND FLANGE ON N-8.
3. FOR RADIATION MONITOR DETAILS SEE M10-4105 - SH.15 AND 20.

NUCLEAR SAFETY RELATED ITEMS ARE SHOWN ON THIS DRAWING
(FOR SAFETY CLASSIFICATION SEE PIPING, EQUIPMENT, VALVE, OR INSTRUMENT LISTS.)

NOTE:
THE P&I D/C &I DIAGRAMS FOR THE C&I FUNCTION SYMBOLS ARE SHOWN ON DRAWING M10-9110 UNLESS OTHERWISE NOTED. SHEET NUMBER & DIAGRAM REFERENCE ARE SHOWN IN THE FUNCTION SYMBOL

CLINTON POWER STATION
UPDATED SAFETY ANALYSIS REPORT

FIGURE 3.6-1
DIVISIONAL SEPARATION AND HIGH-ENERGY P&ID'S-
DRYWELL PURGE
SHEET 98 OF 111

REVISION 7
JUNE 1997

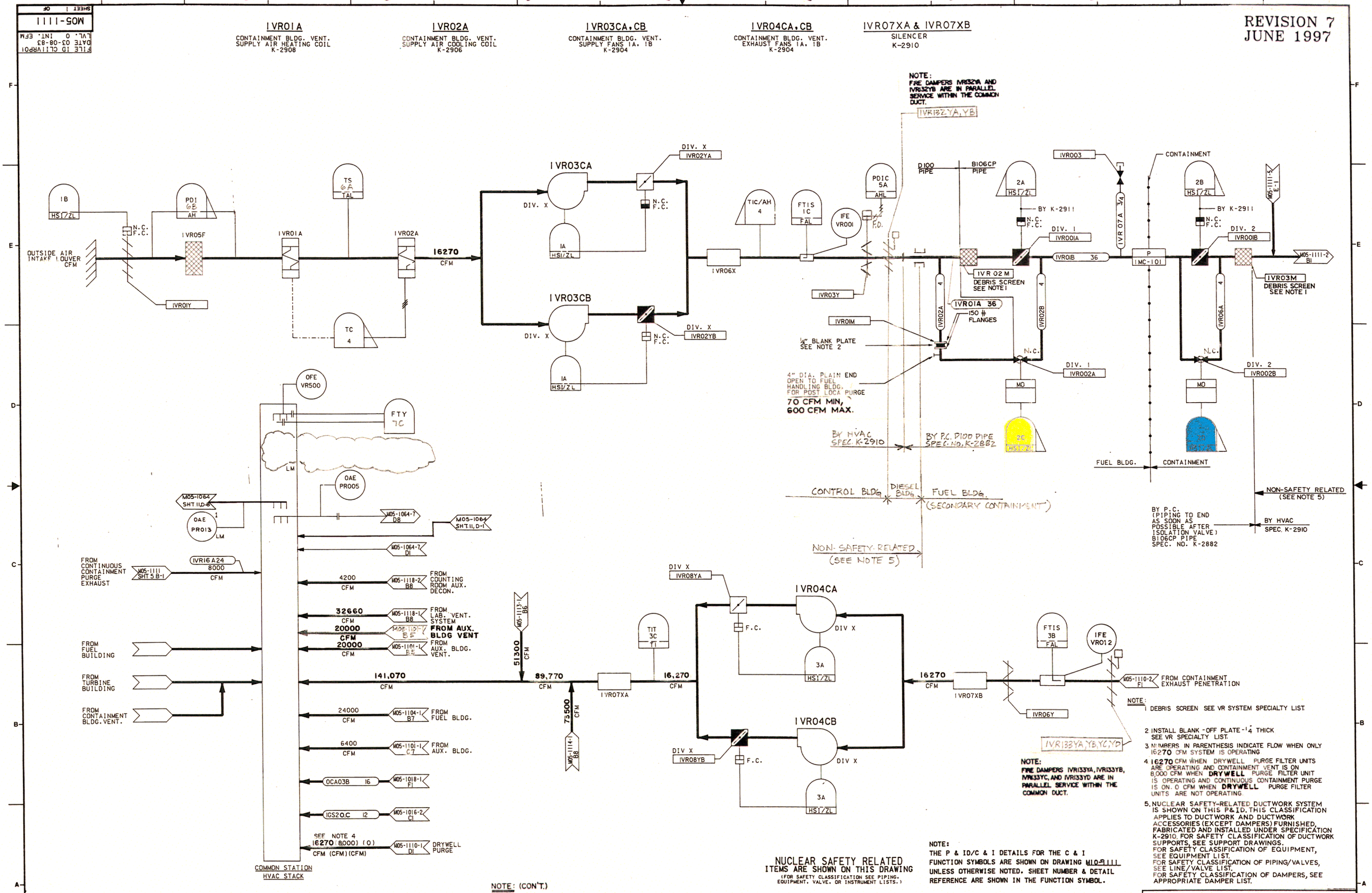

NOTE:
1 DEBRIS SCREEN SEE VR SYSTEM SPECIALTY LIST.
2 INSTALL BLANK-OFF PLATE-1/4 THICK SEE VR SPECIALTY LIST.
3 NUMBERS IN PARENTHESIS INDICATE FLOW WHEN ONLY 16270 CFM SYSTEM IS OPERATING.
4 16270 CFM WHEN DRYWELL PURGE FILTER UNITS ARE OPERATING AND CONTAINMENT VENT IS ON 8,000 CFM WHEN DRYWELL PURGE FILTER UNIT IS OPERATING AND CONTINUOUS CONTAINMENT PURGE IS ON. 0 CFM WHEN DRYWELL PURGE FILTER UNITS ARE NOT OPERATING.
5. NUCLEAR SAFETY-RELATED DUCTWORK SYSTEM IS SHOWN ON THIS P&ID. THIS CLASSIFICATION APPLIES TO DUCTWORK AND DUCTWORK ACCESSORIES (EXCEPT DAMPERS) FURNISHED, FABRICATED AND INSTALLED UNDER SPECIFICATION K-2910. FOR SAFETY CLASSIFICATION OF DUCTWORK SUPPORTS, SEE SUPPORT DRAWINGS. FOR SAFETY CLASSIFICATION OF EQUIPMENT, SEE EQUIPMENT LIST. FOR SAFETY CLASSIFICATION OF PIPING/VALVES, SEE LINE/VALVE LIST. FOR SAFETY CLASSIFICATION OF DAMPERS, SEE APPROPRIATE DAMPER LIST.

NOTE: (CON'T.)
6. AIR FLOWS SHOWN FOR FANS 1VR03CA/CB AND 1VR04CA/CB MAY RESULT IN UNSTABLE FAN OPERATION. IPC HAS DETERMINED THAT THIS CONDITION IS ACCEPTABLE UNTIL AT LEAST THE FIRST OUTAGE. (REF. IPC LTR. NO. S-6083).

NUCLEAR SAFETY RELATED ITEMS ARE SHOWN ON THIS DRAWING
(FOR SAFETY CLASSIFICATION SEE PIPING, EQUIPMENT, VALVE, OR INSTRUMENT LISTS.)

NOTE:
THE P & ID/C & I DETAILS FOR THE C & I FUNCTION SYMBOLS ARE SHOWN ON DRAWING M10-9111 UNLESS OTHERWISE NOTED. SHEET NUMBER & DETAIL REFERENCE ARE SHOWN IN THE FUNCTION SYMBOL.

CLINTON POWER STATION
UPDATED SAFETY ANALYSIS REPORT

FIGURE 3.6-1
DIVISIONAL SEPARATION AND HIGH-ENERGY P&ID'S-
CONTAINMENT BLDG. HVAC
SHEET 99 OF 111

DRR-M-162-C

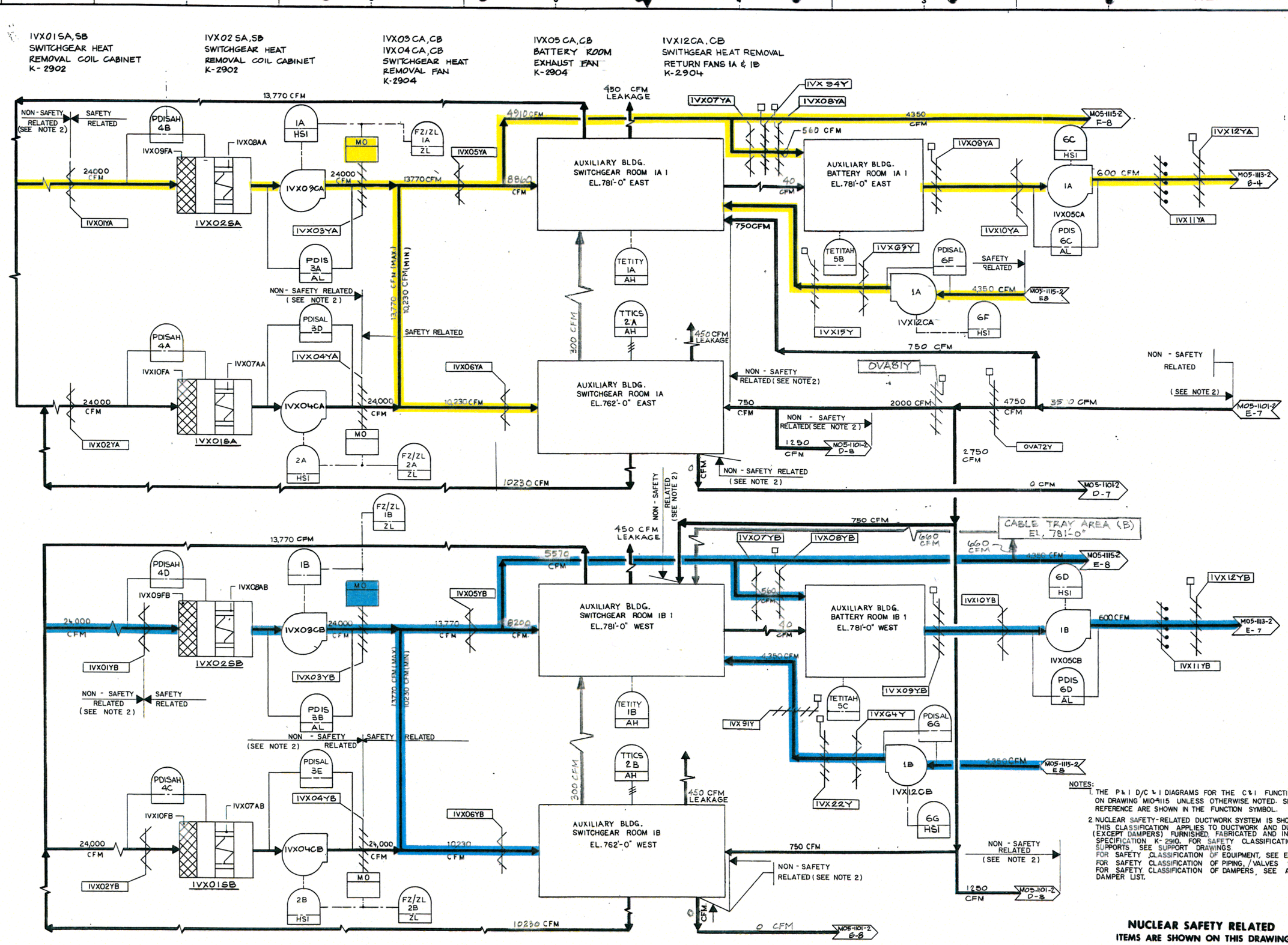

NOTES:

1. THE P&I D/C & I DIAGRAMS FOR THE C&I FUNCTION SYMBOLS ARE SHOWN ON DRAWING M10-1115 UNLESS OTHERWISE NOTED. SHEET NUMBER & DIAGRAM REFERENCE ARE SHOWN IN THE FUNCTION SYMBOL.
2. NUCLEAR SAFETY-RELATED DUCTWORK SYSTEM IS SHOWN ON THIS P&ID. THIS CLASSIFICATION APPLIES TO DUCTWORK AND DUCTWORK ACCESSORIES (EXCEPT DAMPERS) FURNISHED, FABRICATED AND INSTALLED UNDER SPECIFICATION K-2910. FOR SAFETY CLASSIFICATION OF DUCTWORK SUPPORTS, SEE SUPPORT DRAWINGS. FOR SAFETY CLASSIFICATION OF EQUIPMENT, SEE EQUIPMENT LIST. FOR SAFETY CLASSIFICATION OF PIPING, /VALVES SEE LINE/VALVE LIST. FOR SAFETY CLASSIFICATION OF DAMPERS, SEE APPROPRIATE DAMPER LIST.

NUCLEAR SAFETY RELATED
ITEMS ARE SHOWN ON THIS DRAWING
(FOR SAFETY CLASSIFICATION SEE PIPING, EQUIPMENT, VALVE, OR INSTRUMENT LISTS.)

CLINTON POWER STATION
UPDATED SAFETY ANALYSIS REPORT

FIGURE 3.6-1
DIVISIONAL SEPARATION AND HIGH-ENERGY P&ID'S-
ESSENTIAL SWITCHGEAR HEAT REMOVAL
SHEET 100 OF 111