REV. 2 SEPT. 1990

M05-1089

ABANDON IN PLACE

OWX06TA & OWX06TB WASTE MIXING DECANT TANKS A & B K-2858A

OWX07T SODIUM SILICATE TANK K-2858A

OWX08T CATALYST STORAGE TANK K-2858A

OWX14SA & OWX14SB FILL PORT ASSEMBLY A & B K-2858A

OWX15SA & OWX15SB REMOTE DRUM CAPPER A & B K-2858A

OWX16S HYDRAULIC BALER K-2858A

OWX17S DRUM HANDLING BRIDGE CRANE K-2858A

OWX18S DRUM HANDLING CART K-2858A

OWX19S DECON STATION K-2858A

OWX20A WARM AIR HEATER K-2858A

OWX21A HOT WATER HEATER K-2858A

OWX35SA & OWX35SB FLOATING SUCTION FILTER ASSEMBLY K-2858A

OWX23PA & OWX23PB WASTE MIXING TANK SLUDGE PUMPS A & B K-2858A

OWX24PA & OWX24PB WASTE MIXING PUMPS A & B K-2858A

OWX25PA & OWX25PB WASTE MIXING TANK DECANT PUMPS A & B K-2858A

OWX26SA & OWX26SB WASTE MIXING TANK AGITATORS A & B K-2858A

OWX27P SODIUM SILICATE TANK PUMP K-2858A

OWX28P CATALYST TANK PUMP K-2858A

OWX29S ROLL UP DOOR K-2858A

OWX07T

OWX06TA

OWX06TB

OWX08T

OWX14SA

OWX14SB

OWX23PA

OWX23PB

OWX24PA

OWX24PB

OWX25PA

OWX25PB

OWX27P

OWX28P

OWX16S

OWX17S

OWX18S

OWX19S

OWX20A

OWX29S

OWX2A

OWX15SA & OWX15SB

NOTE :

1. FOR PLUG VALVE OPERATOR ASSEMBLY DETAIL SEE M05-1088 SHEET 1.

2. PER NCMR NO. 1-1988, VALVE BODY FOR OWX103B WAS REMOVED FROM THE PIPE, WHILE ITS ACTUATOR WAS LEFT IN PLACE

AUGMENTED "D" PIPING (PIPE CLASS "R") AND COMPONENTS ARE CONTAINED ON THIS DRAWING. SEE THE VALVE, LINE, EQUIPMENT AND SPECIALTY LISTS FOR PROPER CLASSIFICATION. ALSO SEE SPEC. K-2882, PAR. 203.7.6.

NOTE:

THE P & I D/C & I DIAGRAMS FOR THE C&I FUNCTION SYMBOLS ARE SHOWN ON DRAWING M10-9089 UNLESS OTHERWISE NOTED. SHEET NUMBER & DIAGRAM REFERENCE ARE SHOWN IN THE FUNCTION SYMBOL.

CLINTON POWER STATION
UPDATED SAFETY ANALYSIS REPORT

FIGURE 3.6-1
DIVISIONAL SEPARATION AND HIGH-ENERGY P&ID'S-RADWASTE SLUDGE PROCESS CONCENTRATE TANK
SHEET 83 OF 111

M05-1102

REVISION 9
JANUARY 2001

OVC02AA,AB
CONTROL ROOM HVAC MAKE UP
AIR ELECTRIC HEATING COIL A,B
K-2900

OVC04CA,CB
CONTROL ROOM HVAC
RETURN FAN A,B
K-2904

OVC05CA,CB
CONTROL ROOM HVAC
MAKE UP AIR FAN A,B
K-2900

OVC12 XA,XB
CONTROL ROOM
HVAC RETURN
FAN SILENCER A,B
K-2910

OVC07SA,SB
CONTROL ROOM HVAC
SUPPLY AIR FILTER
PACKAGE A,B
K-2900

OVC09SA,SB
CONTROL ROOM HVAC
MAKE UP AIR FILTER
PACKAGE A,B
K-2900

NOTES:
1. NUCLEAR SAFETY RELATED DUCTWORK SYSTEM IS SHOWN ON THIS P&ID. THIS CLASSIFICATION APPLIES TO DUCTWORK AND DUCTWORK ACCESSORIES (EXCEPT DAMPERS) FURNISHED, FABRICATED AND INSTALLED UNDER SPECIFICATION K-2910, FOR SAFETY CLASSIFICATION OF DUCTWORK SUPPORTS, SEE SUPPORT DRAWINGS.
FOR SAFETY CLASSIFICATION OF EQUIPMENT, SEE EQUIPMENT LIST.
FOR SAFETY CLASSIFICATION OF PIPING/VALVES SEE LINE/VALVE LIST.
FOR SAFETY CLASSIFICATION OF DAMPERS, SEE APPROPRIATE DAMPER LIST.
2. AIR FLOWS IN PARENTHESIS ARE FOR LOOP/HIGH RADIATION MODE OPERATION.
3. DRAIN LINES MANUAL VALVES TO BE LOCATED AS CLOSE AS POSSIBLE TO THE EQUIPMENT.

NOTES:
1. THE P & I D/C & I DIAGRAMS FOR THE C&I FUNCTION SYMBOLS ARE SHOWN ON DRAWING M10-0122 UNLESS OTHERWISE NOTED. SHEET NUMBER & DIAGRAM REFERENCE ARE SHOWN IN THE FUNCTION SYMBOL.
2. DOP SAMPLE AND INJECTION MANIFOLDS ARE FABRICATED AND INSTALLED BY SPEC. K-2882.

CLINTON POWER STATION
UPDATED SAFETY ANALYSIS REPORT

FIGURE 3.6-1
DIVISIONAL SEPARATION AND
HIGH-ENERGY P&ID'S
CONTROL ROOM HVAC
SHEET 84 OF 111

OVC03CA,CB
CONTROL ROOM HVAC
SUPPLY FAN A,B
K-2904

OVC01AA,AB
CONTROL ROOM HVAC
ELECTRIC HEATING COIL A,B
K-2902

OVC06AA, AB
CONTROL ROOM HVAC
COOLING COIL A,B
K-2902

OVC10SA,SB
CONTROL ROOM HVAC
AIR HANDLING UNIT A,B
K-2902

OVC 19MA, MB, MC, MD, ME, MF, MG & MH
CONTROL ROOM SYSTEM HVAC
HUMIDIFIERS
K-2910

OVC20XA, XB, XC, XD, XE, XF, XG, XH, XJ, XK, XL, XM, XN & XP
CONTROL ROOM SILENCERS
K-2910

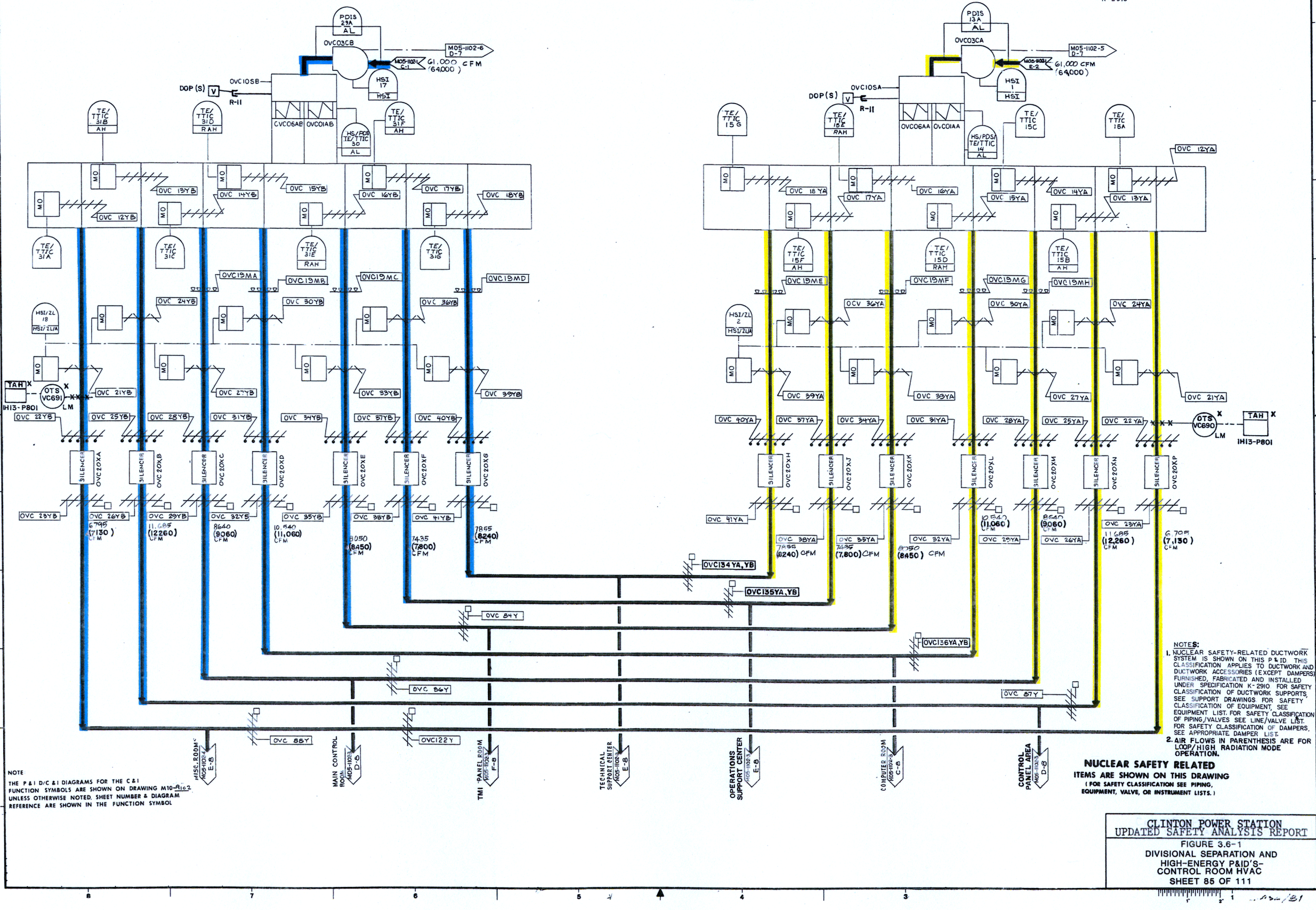

NOTE
THE P & I D/C & I DIAGRAMS FOR THE C & I FUNCTION SYMBOLS ARE SHOWN ON DRAWING M10-9102 UNLESS OTHERWISE NOTED. SHEET NUMBER & DIAGRAM REFERENCE ARE SHOWN IN THE FUNCTION SYMBOL

NOTES:
1. NUCLEAR SAFETY-RELATED DUCTWORK SYSTEM IS SHOWN ON THIS P & ID. THIS CLASSIFICATION APPLIES TO DUCTWORK AND DUCTWORK ACCESSORIES (EXCEPT DAMPERS) FURNISHED, FABRICATED AND INSTALLED UNDER SPECIFICATION K-2910 FOR SAFETY CLASSIFICATION OF DUCTWORK SUPPORTS, SEE SUPPORT DRAWINGS FOR SAFETY CLASSIFICATION OF EQUIPMENT, SEE EQUIPMENT LIST. FOR SAFETY CLASSIFICATION OF PIPING/VALVES SEE LINE/VALVE LIST. FOR SAFETY CLASSIFICATION OF DAMPERS, SEE APPROPRIATE DAMPER LIST.
2. AIR FLOWS IN PARENTHESIS ARE FOR LOOP/HIGH RADIATION MODE OPERATION.

NUCLEAR SAFETY RELATED
ITEMS ARE SHOWN ON THIS DRAWING
(FOR SAFETY CLASSIFICATION SEE PIPING, EQUIPMENT, VALVE, OR INSTRUMENT LISTS.)

CLINTON POWER STATION
UPDATED SAFETY ANALYSIS REPORT

FIGURE 3.6-1
DIVISIONAL SEPARATION AND HIGH-ENERGY P&ID'S-
CONTROL ROOM HVAC
SHEET 85 OF 111

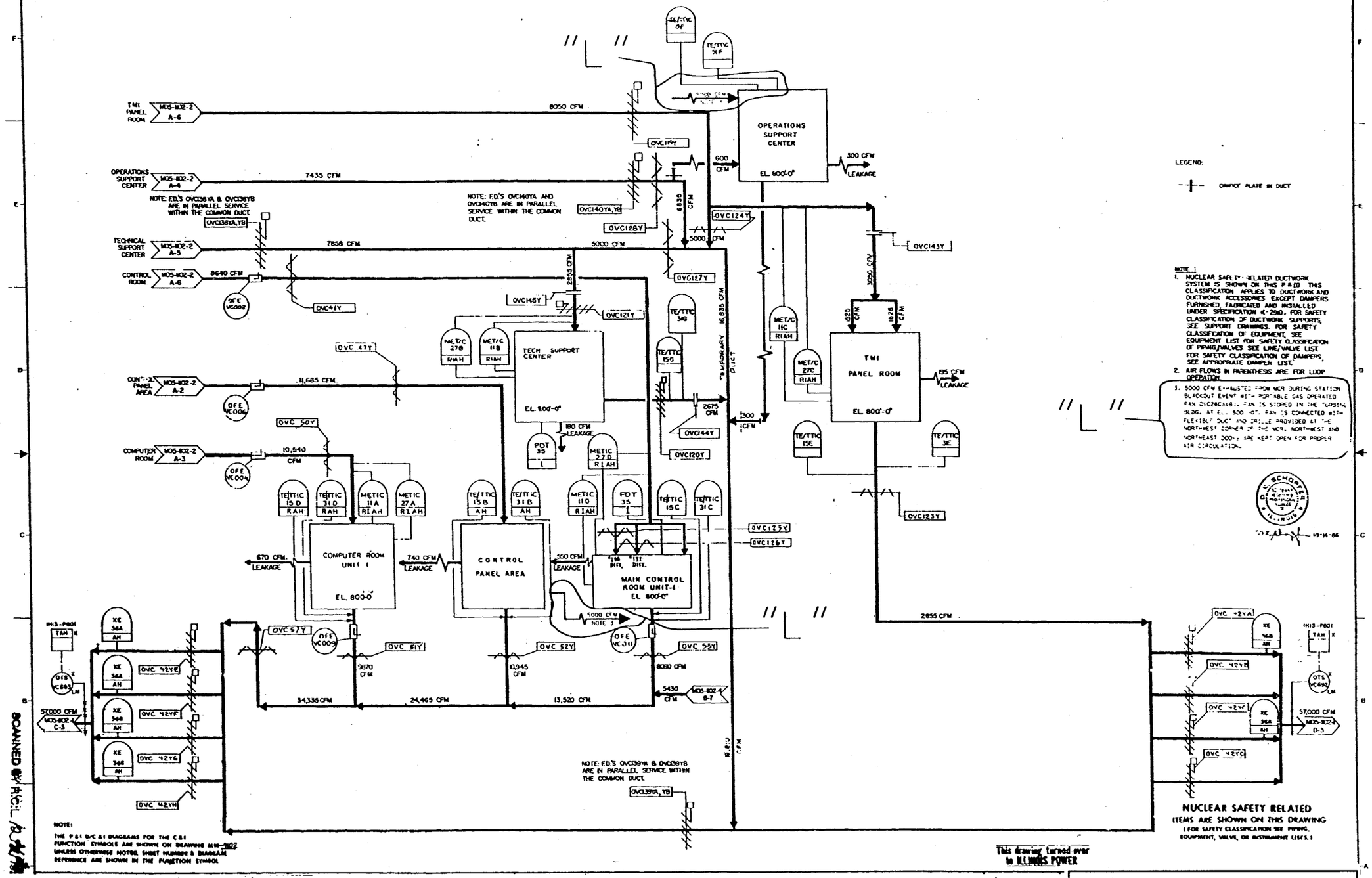

CLINTON POWER STATION
UPDATED SAFETY ANALYSIS REPORT

FIGURE 3.6-1

DIVISIONAL SEPARATION AND HIGH-ENERGY P&ID'S-CONTROL ROOM HVAC
SHEET 86 OF 111

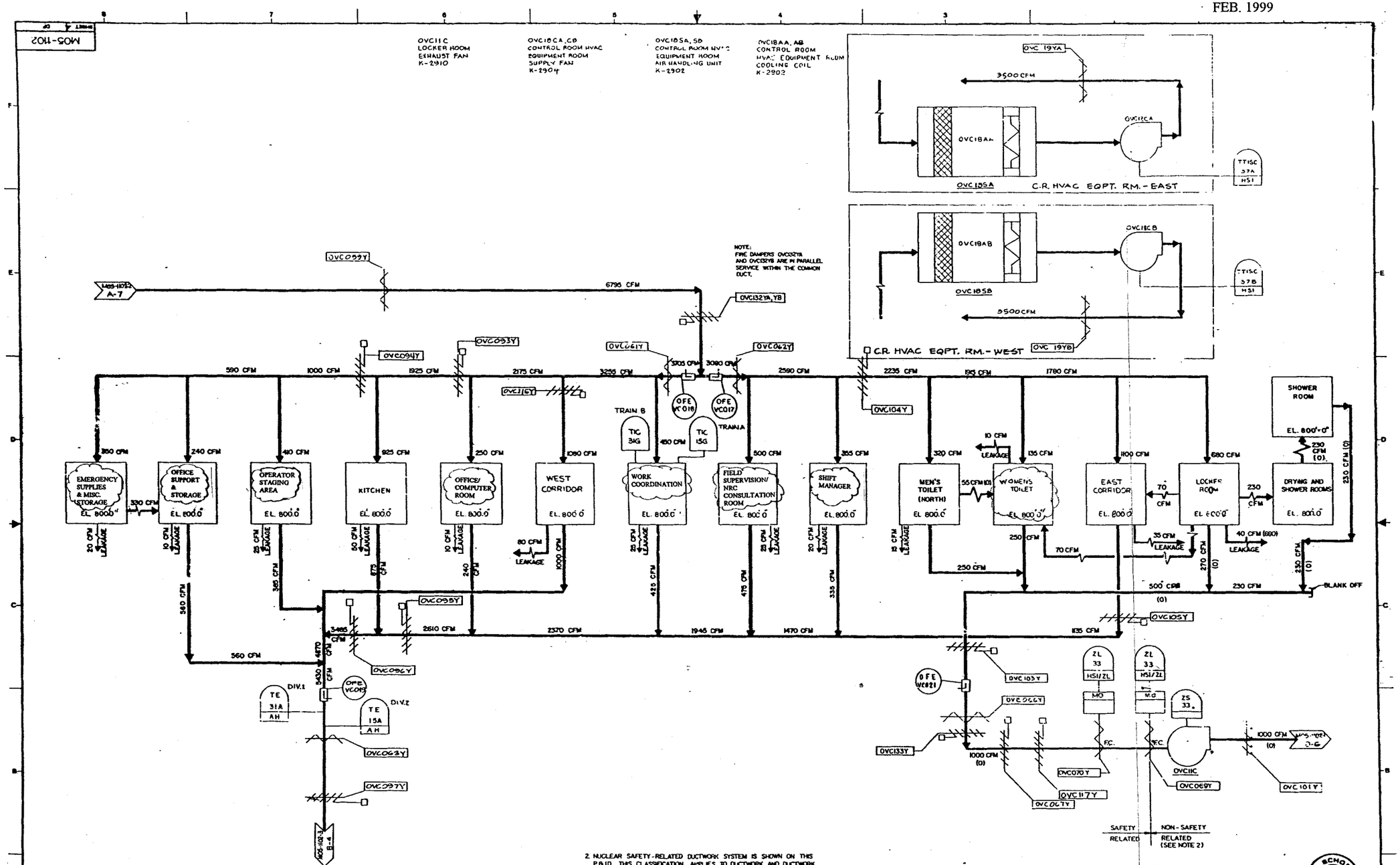

2. NUCLEAR SAFETY-RELATED DUCTWORK SYSTEM IS SHOWN ON THIS P&ID. THIS CLASSIFICATION APPLIES TO DUCTWORK AND DUCTWORK ACCESSORIES (EXCEPT DAMPERS) FURNISHED, FABRICATED AND INSTALLED UNDER SPECIFICATION K-2910.
FOR SAFETY CLASSIFICATION OF DUCTWORK SUPPORTS, SEE SUPPORT DRAWINGS
FOR SAFETY CLASSIFICATION OF EQUIPMENT, SEE EQUIPMENT LIST.
FOR SAFETY CLASSIFICATION OF PIPING/VALVES, SEE LINE/VALVE LIST.
FOR SAFETY CLASSIFICATION OF DAMPERS, SEE APPROPRIATE DAMPER LIST.
3. AIR FLOWS IN PARENTHESIS ARE FOR LOOP OPERATION.

NOTES:
1. THE P&I D/C&I DIAGRAMS FOR THE C&I FUNCTION SYMBOLS ARE SHOWN ON DRAWING M10-9102 UNLESS OTHERWISE NOTED. SHEET NUMBER & DIAGRAM REFERENCE ARE SHOWN IN THE FUNCTION SYMBOL

NUCLEAR SAFETY RELATED
ITEMS ARE SHOWN ON THIS DRAWING
(FOR SAFETY CLASSIFICATION SEE PIPING, EQUIPMENT, VALVE, OR INSTRUMENT LISTS.)

This drawing turned over to ILLINOIS POWER

CLINTON POWER STATION
UPDATED SAFETY ANALYSIS REPORT

FIGURE 3.6-1
DIVISIONAL SEPARATION AND HIGH-ENERGY P&ID'S-CONTROL ROOM HVAC
SHEET 87 OF 111

REV. 2 SEPT. 1990

MO5-1102 SHEET 5 OF 7

OVC12MA
CHEMICAL FEEDERS
BY I.P.C.

OVC08PA
CONTROL ROOM HVAC
CHILLED WATER PUMP
K-2826

OVC14TA
CONTROL ROOM HVAC
COMPRESSION TANK
K-2841

OVC13CA
CONTROL ROOM HVAC
WATER CHILLER OA
K-2905B

OVC06AA
CONTROL ROOM HVAC
COOLING COIL
K-2902

OVC18AA
CONTROL ROOM HVAC
EQUIPMENT ROOM
CHILLED WATER COIL
K-2902

QUICK FILL
OVC019A
OVC020A
OVC10AA 2
OVC36AA 2
OVC018A
OVC01MA
OVC022A
OVC094A 2
SET @ 52 PSIG
OPC VC550 A
OVC080AB 1/2
OVC099A
OVC080AA 3/4
OVC003A
OVC112A H.P. VENT
OVC102AA 3/4
OVC01AA 2
OVC28AA 18
OVC024A
C106CP D100
MO5-1042 SHT.5 B-4
OMC 148A 2
C107CP
MO5-1052 SHT. 1 C-7
15XH6AA 2
OVC016A
OVC017A
OVC11AA 1 1/2
OVC120A 1/4
OVC120B 1/4
OVC021A
OVC120E 3/4
SET @ 100 PSIG
D-105CP C-106CP
2TEN9A 1 1/2
MO5-1053 SHT24,E-4
OVC025A
2"x1" RED
OVC12AA 1
OVC14TA
K-2841 K-2882
OVC028A
OVC16AA 3/4
OVC15AA 1
OVC027A
OVC14AA 2
C106CP D105CP
OVC026A
2TEN8A 2
OVC031A
MAKE-UP WATER
OVC643A
OVC644A
OVC34BA 1/2
OVC35BA 1/2
OVC063A
OVC12MA
OVC064A
OVC95AA 1/2
OVC645A
OVC34AA 1/2
OVC35AA 1/2
OVC030A
OVC18AA 3/4
TO DRAIN
OVC029A
OVC17AA 3/4
OVC014A
OVC02MA
OVC041A
K-2826 K-2882
6"x4" RED.
C106CP
OVC08PA
HSI 4A
OVC023A
OVC003AA 6
OVC029AA 1
OVC03JAA 6
D-105CP C-106CP
H.P.VENT
OVC114A
OVC104AA 3/4
OVC001A
D-100
C-106CP
OVC019AA 2
OVC032A
OVC120H 1/2
OVC05CA 6
HIGHER THAN COOLING COIL OVC06AA
OVC007A
4"x3" RED
OTI VC420 X LM
OTEW VC420 LM
OTI VC422 X LM
OTEW VC422 LM
TS 10
P
S
15AB4AB 2
MO5-1048 SHT-7, E-4
6"x6" RED
OVC033A
OVC20AA 3/4
OVC081AA 3/4
OVC100A
OVC115A
PC 10
REFRIGERANT LINE
VENT
1/2"x1/4" RED
CONTROL PANEL
DRAIN
OVC107AA 1/2
OVC108AA 1/4
OVC106AA 1/4
OVC109AA 1/2
LOAD LIMIT CONTROL PACKAGE
MO5-1052 SHT.1 C-7
FROM SHUTDOWN SERVICE WATER
15XK4AA 3/4
HSI 10 PSAL
OVC110AA 8
OVC116A
OVC035A
OVC034A
OVC22AA 3/4
OVC21AA 3/4
OVC22AC 3/4
OVC035C
OVC100A
OVC13CA
OTC VC622A LM
OTEW VC622A LM
OVC006A
8"x6" RED.
K-2905B
K-2882
C106CP
OFE VC008 LM
FISAL 4B
OVC30AA 8
OVC037A
OVC24AA 3/4
OTI VC421 X LM
OTEW VC421 LM
OVC04AA 6
H.P. VENT
OVC062A
OVC33AA 3/4
OVC061A
OVC32AA 3/4
OVC040A
OVC04BA4
OVC05BA4
OVC05AL 4
4"x3" RED.
OVC04CJ 3
OVC05BC 4
OVC04BC 4
OVC05AJ 3
OVC04CL 3
OVC05AG 3
OVC04CE 3
OVC05AE 3
OVC04CG 3
OVC05AC 3
OVC04CA 3
OVC05AA 3
OVC04CC 3
OVC013L
OVC08BC2
ITE03MA
OVC06AA (SEE NOTE2)
OVC013J
OVC088A 2
MO5-1053 SHT.24 F-5
2TEM6A 2
2TEM9A 2
D105CP C-106CP
OVC002A
OVC08CC 2
OVC015A
OVC110A
OVC121A 3/4
H.P.VENT
OVC06AA 2
MO5-1053 SHT.24,E-5
2TEM8A 1
H.P. VENT
OVC111A
OVC101AA 3/4
OVC07AA 2
TIC 37A HS
OTI VC423 X LM
OTEW VC423 LM
F.O.
OVC010A
OVC011A
OVC009A
OVC07BA 2
OVC012A
P
OVC039A
OVC26AA 3/4
3"x2" RED
K-2902 K-2882
C106CP
K-2882 K-2902
OVC18AA
3x2 RED
OVC008A
OVC31AA 2
OVC060A
C106CP D105CP
MO5-1053 SHT.24 C-3
2TEM7A 2

NOTES:
1. * FURNISHED WITH EQUIPMENT.
2. COOLING COIL OVC06AA IS SPLIT INTO SIX SEPARATE COILS.

NUCLEAR SAFETY RELATED
ITEMS ARE SHOWN ON THIS DRAWING
(FOR SAFETY CLASSIFICATION SEE PIPING, EQUIPMENT, VALVE, OR INSTRUMENT LISTS.)

NOTE:
THE P & I D/C & I DIAGRAMS FOR THE C & I FUNCTION SYMBOLS ARE SHOWN ON DRAWING M10-9102 UNLESS OTHERWISE NOTED. SHEET NUMBER & DIAGRAM REFERENCE ARE SHOWN IN THE FUNCTION SYMBOL.

CLINTON POWER STATION
UPDATED SAFETY ANALYSIS REPORT

FIGURE 3.6-1
DIVISIONAL SEPARATION AND HIGH-ENERGY P&ID'S-
CONTROL ROOM HVAC
SHEET 88 OF 111

DRR-M-177-C

REV. 2 SEPT. 1990

M05-1102 SHEET 6 OF 7

OVC12MB
CHEMICAL FEEDERS
BY I.P.C.

OVC08PB
CONTROL ROOM HVAC
CHILLED WATER PUMP
K-2826

OVC14TB
CONTROL ROOM HVAC
COMPRESSION TANK
K-2841

OVC13CB
CONTROL ROOM HVAC
WATER CHILLER OB
K-2905B

OVC06AB
CONTROL ROOM HVAC
COOLING COIL
K-2902

OVC18AB
CONTROL ROOM HVAC
EQUIPMENT ROOM
CHILLED WATER COIL
K-2902

MAKE-UP WATER

OVC12MB

OVC14TB

OVC08PB

OVC13CB

OVC18AB

OVC06AB (SEE NOTE 2)

REFRIGERANT LINE

LOAD LIMIT CONTROL PACKAGE

FROM SHUTDOWN SERVICE WATER

HIGHER THAN COOLING COIL OVC06AB

QUICK FILL

H.P. VENT

TO DRAIN

NOTES:
1. * FURNISHED WITH EQUIPMENT.
2. COOLING COIL OVC06AB IS SPLIT INTO SIX SEPARATE COILS.

NUCLEAR SAFETY RELATED
ITEMS ARE SHOWN ON THIS DRAWING
(FOR SAFETY CLASSIFICATION SEE PIPING, EQUIPMENT, VALVE, OR INSTRUMENT LISTS.)

NOTE:
THE P & I D/C & I DIAGRAMS FOR THE C & I FUNCTION SYMBOLS ARE SHOWN ON DRAWING M10-9102 UNLESS OTHERWISE NOTED. SHEET NUMBER & DIAGRAM REFERENCE ARE SHOWN IN THE FUNCTION SYMBOL.

CLINTON POWER STATION
UPDATED SAFETY ANALYSIS REPORT

FIGURE 3.6-1
DIVISIONAL SEPARATION AND HIGH-ENERGY P&ID'S-
CONTROL ROOM HVAC
SHEET 89 OF 111

DEC-M-177-C

FILE ID — DATE — INT.
M05-1102 SHEET 7 OF 7

OVC17B
CONTROL ROOM HVAC
HUMIDIFICATION STEAM BOILER
K-2910

OVC19MA OVC19MB OVC19MC OVC19MD
OVC19ME OVC19MF OVC19MG & OVC19MH
CONTROL ROOM HUMIDIFIERS
K-2910

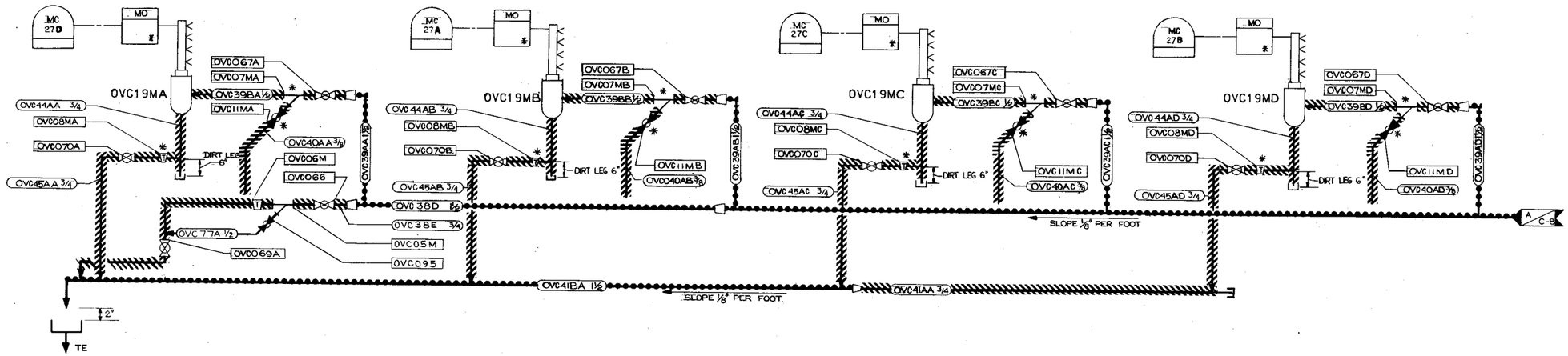

NOTES:
1. ✱INDICATES FURNISHED WITH EQUIPMENT.
2. ALL EQUIPMENT AND SPECIALTIES HAVE SCREWED CONNECTIONS, INCLUDING CAPS FOR DIRT LEGS AND END OF THE LINE DRIPS.
3. ALL STEAM TAKE-OFFS TO BE FROM THE TOP OF THE HEADER.
4. FOR HUMIDIFIERS LOCATIONS, REFER TO DRAWING NO. M05-1102 SHT. 2
5. BLOWDOWN LINES TO BE TERMINATED MINIMUM OF 2 FEET AWAY FROM ANY EQUIPMENT.

NOTE
THE P & I D/C & I DIAGRAMS FOR THE C & I FUNCTION SYMBOLS ARE SHOWN ON DRAWING M10-1102 UNLESS OTHERWISE NOTED. SHEET NUMBER & DIAGRAM REFERENCE ARE SHOWN IN THE FUNCTION SYMBOL

CLINTON POWER STATION
UPDATED SAFETY ANALYSIS REPORT

FIGURE 3.6-1
DIVISIONAL SEPARATION AND HIGH-ENERGY P&ID'S-
CONTROL ROOM HVAC
SHEET 90 OF 111

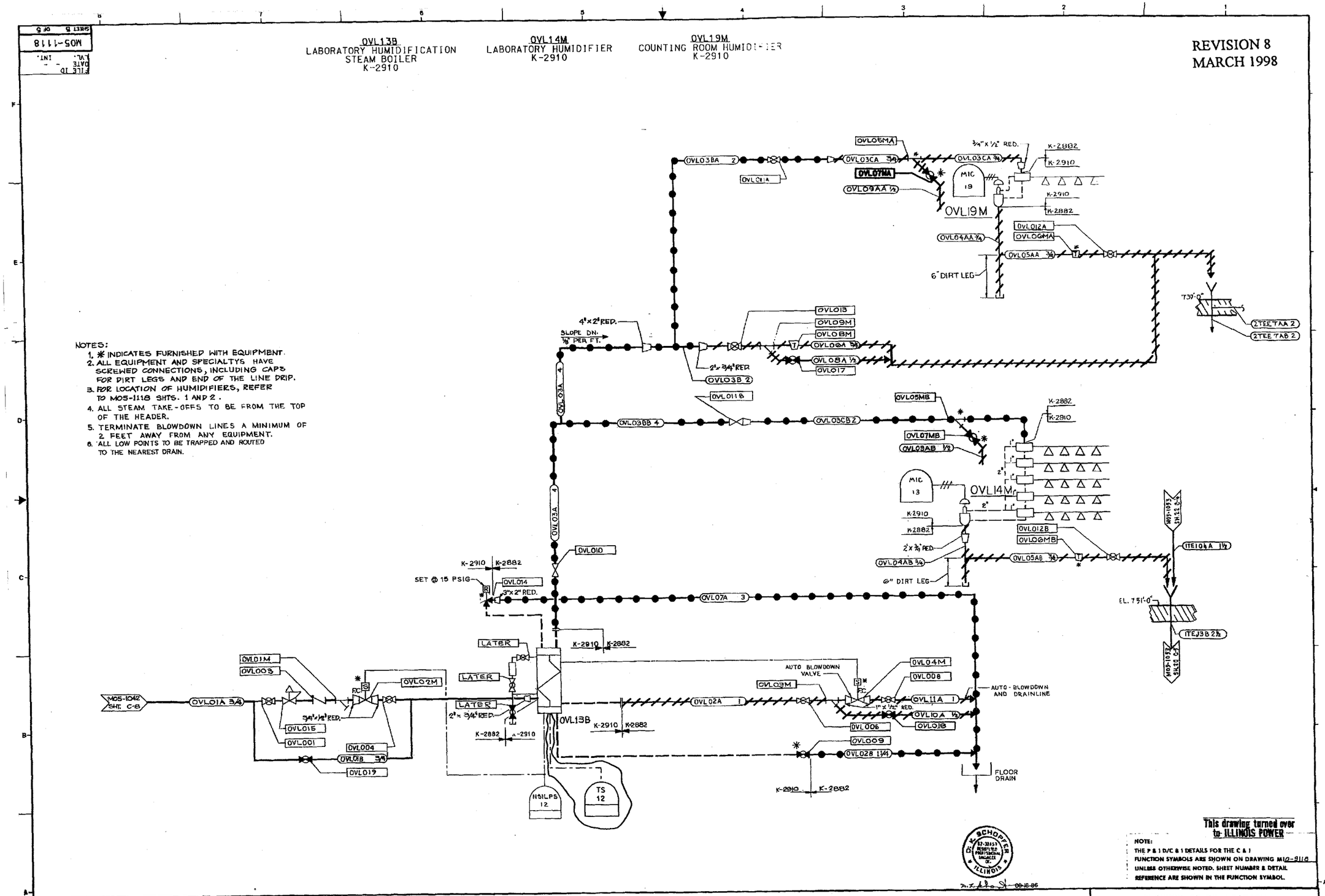

CLINTON POWER STATION
UPDATED SAFETY ANANLYSIS REPORT

FIGURE 3.6-1
DIVISIONAL SEPARATION AND
HIGH-ENERGY P& ID'S
LABORATORY AND COUNTING ROOM HVAC
SHEET 90A OF 111

IVD01CA, CB, CC
DIESEL GENERATOR VENT.
FANS 1A, 1B, 1C
K-2904

IVD02CA, CB, CC
DIESEL GENERATOR VENT.
OIL ROOM EXHAUST
FANS 1A, 1B, 1C
K-2904

IVC03CA, CB
DIESEL GENERATOR
MAKE-UP FAN
K-2904

IVD01S
DIESEL GENERATOR
MAKE-UP SUPPLY UNIT
K-2906

IVC04A
DIESEL GENERATOR
MAKE-UP HEATING COIL
K-2906

IVD05A
DIESEL GENERATOR
MAKE-UP COOLING COIL
K-2906

IVD26F
DIESEL GENERATOR
MAKE-UP SUPPLY AIR FILTER
K-2940

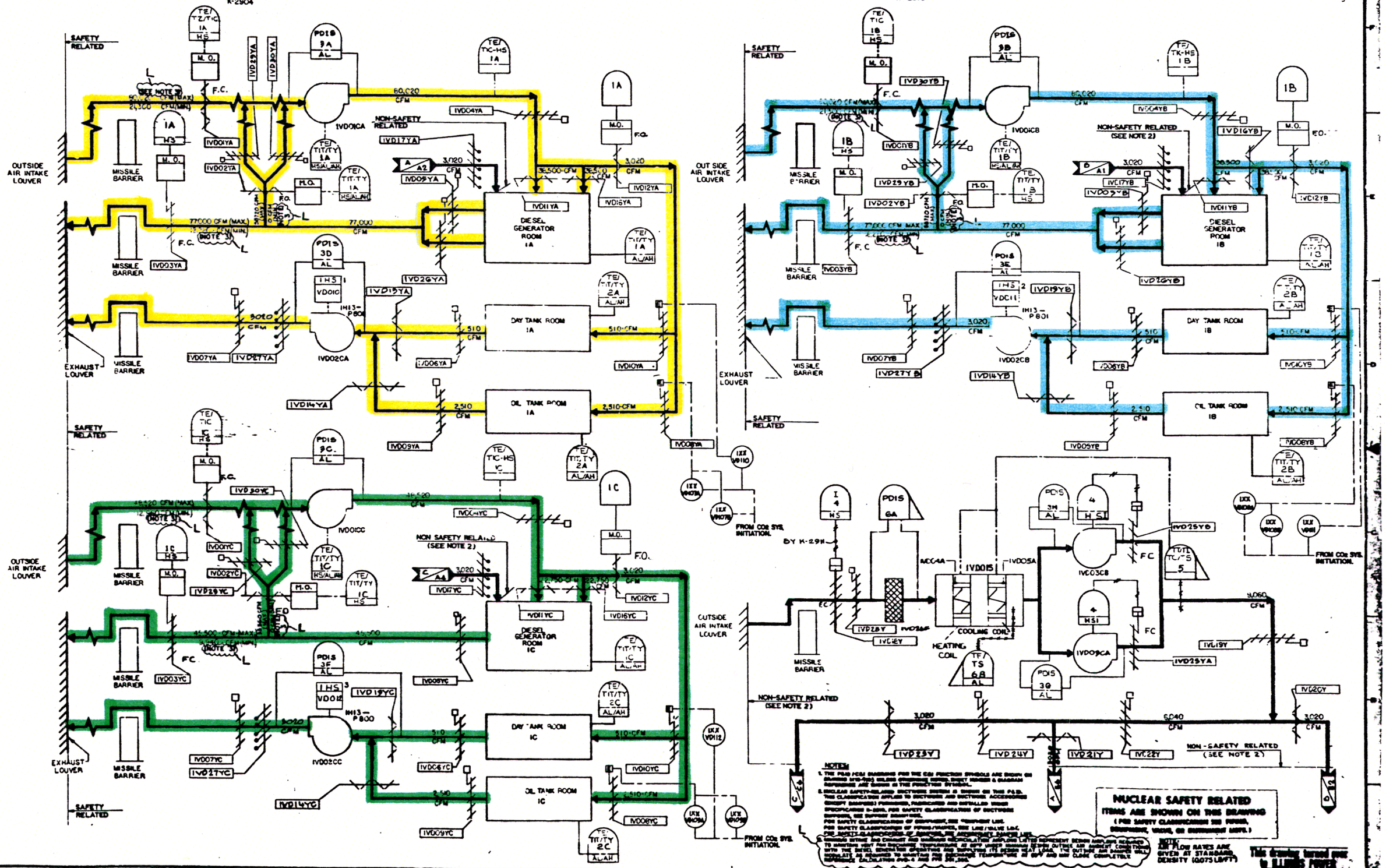

CLINTON POWER STATION
UPDATED SAFETY ANALYSIS REPORT

FIGURE 3.6-1
DIVISIONAL SEPARATION AND
HIGH-ENERGY P&ID'S-
DIESEL GENERATOR ROOM VENTILATION
SHEET 91 OF 111

IVF01F
FUEL BLDG. VENT.
SUPPLY AIR FILTER
K-2910

IVF02A
FUEL BLDG. VENT.
SUPPLY AIR HTG. COIL
K-2906

IVF03CA,CB
FUEL BLDG. VENT.
SUPPLY AIR FANS 1A, 1B
K-2904

IVF04CA,CB
FUEL BLDG. VENT.
EXHAUS AIR FANS 1A, 1B
K-2904

IVF05A
FUEL BLDG. VENT.
SUPPLY AIR CLG. COIL
K-2906

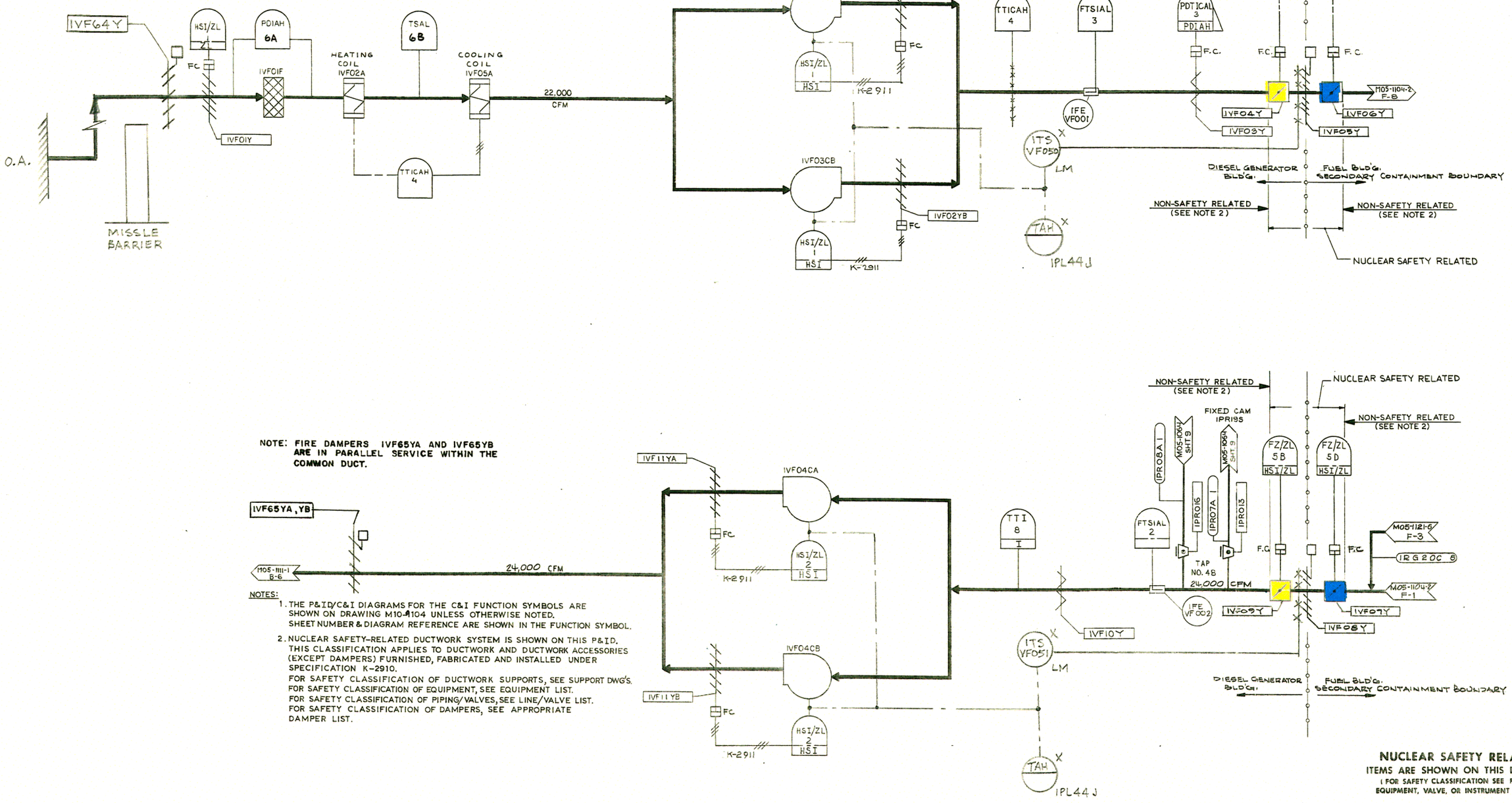

NOTE: FIRE DAMPERS IVF65YA AND IVF65YB ARE IN PARALLEL SERVICE WITHIN THE COMMON DUCT.

NOTES:

1. THE P&ID/C&I DIAGRAMS FOR THE C&I FUNCTION SYMBOLS ARE SHOWN ON DRAWING M10-1104 UNLESS OTHERWISE NOTED. SHEET NUMBER & DIAGRAM REFERENCE ARE SHOWN IN THE FUNCTION SYMBOL.
2. NUCLEAR SAFETY-RELATED DUCTWORK SYSTEM IS SHOWN ON THIS P&ID. THIS CLASSIFICATION APPLIES TO DUCTWORK AND DUCTWORK ACCESSORIES (EXCEPT DAMPERS) FURNISHED, FABRICATED AND INSTALLED UNDER SPECIFICATION K-2910.
   FOR SAFETY CLASSIFICATION OF DUCTWORK SUPPORTS, SEE SUPPORT DWG'S.
   FOR SAFETY CLASSIFICATION OF EQUIPMENT, SEE EQUIPMENT LIST.
   FOR SAFETY CLASSIFICATION OF PIPING/VALVES, SEE LINE/VALVE LIST.
   FOR SAFETY CLASSIFICATION OF DAMPERS, SEE APPROPRIATE DAMPER LIST.

NUCLEAR SAFETY RELATED
ITEMS ARE SHOWN ON THIS DRAWING
(FOR SAFETY CLASSIFICATION SEE PIPING, EQUIPMENT, VALVE, OR INSTRUMENT LISTS.)

CLINTON POWER STATION
UPDATED SAFETY ANALYSIS REPORT

FIGURE 3.6-1
DIVISIONAL SEPARATION AND HIGH-ENERGY P&ID'S-
FUEL BUILDING HVAC
SHEET 92 OF 111

DO NOT USE I, O, Q OR X FOR REVISION

REVISION 7
JUNE 1997

SHEET 1 OF
M05-1105

OVG01SA & OVG01SB
STANDBY GAS TREATMENT SYSTEM
EQUIPMENT TRAINS A & B
K-2900

OVG02CA & OVG02CB
STANDBY GAS TREATMENT SYSTEM
FANS A&B
K-2900

OVG03CA & OVG03CB
STANDBY GAS TREATMENT SYSTEM
STANDBY COOLING AIR FANS A&B
K-2900

OVG04AA & OVG04AB
STANDBY GAS TREATMENT SYSTEM
ELECTRIC HEATERS A&B
K-2900

OVG05FA & OVG05FB
STANDBY GAS TREATMENT SYSTEM
DEMISTERS A&B
K-2900

OVG06FA & OVG06FB
STANDBY GAS TREATMENT SYSTEM
PRE-FILTERS A&B
K-2900

OVG07FA & OVG07FB
STANDBY GAS TREATMENT SYSTEM
UP STREAM HEPA FILTERS A&B
K-2900

OVG08FA & OVG08FB
STANDBY GAS TREATMENT SYSTEM
CHARCOAL ADSORBERS A&B
K-2900

OVG11FA & OVG11FB
STANDBY GAS TREATMENT SYSTEM
DOWNSTREAM HEPA FILTERS A&B
K-2900

CONTROL BUILDING

PORTABLE RAD. MONITOR TAP NO. 34

PORTABLE RAD. MONITOR TAP NO. 35

COMMON STATION VENT

DIESEL GENERATOR BUILDING ROOF

FURNISHED BY K-2900
INSTALLED BY K-2910

K-2910

1VG21AA 18
1VG21AB 18
2VG21AA 18
2VG21AB 18
1VG37A 10
2VG37A 10
1VG38A 10
2VG38A 10
1VQ15A 10
2VQ15A 10
1VQ14A 10
2VQ14A 10
1"x3/4" RED.
0VG035A
0VG035B
0VG10A 18
0VG10AA18
0VG10AB18
0VG01YA
0VG01YB
0VG03YA
0VG03YB
0VG06AA 6
0VG06AB6
0VG07AA18
0VG07AB18
0VG07BA18
0VG07BB18
0VG04YA
0VG04YB
0VG08AA6
0VG08AB6
0VG05YA
0VG05YB
0VG02YA
0VG02YB
1VG02YA
1VG02YB
2VG02YA
2VG02YB
1VG01YA
1VG01YB
2VG01YA
2VG01YB
1V602YA
1V602YB
2V602YA
2V602YB
M05-1105 SHT 2 C-1
M05-1110 SHT 2 E-1
M05-1110 SHT 2 D-1
M05-1110 SHT 2 D-
M05-1105 SHT 2 C-
M05-1105 SHT 2 A-B
FC
MO
S
1PR77AA 1
1PR089A
1PR78AA 1
1PR090A
0VG036A
0VG39A 3/4
0VG036B
0VG40A 3/4
0.344 CP
0.100
FTC Z FIRAHL/Z
FTC B FIRAL-H/Z
DOP (I)
V
INSTALL WITH UNIT 1
FUTURE UNIT 2
OAE VG151 LM
OFE VG004 LM
OFE VG104 LM
OAE VG152 LM
2" NPT COUPLING (TYPICAL FOR 7)
K-2882
K-2900
PDIS 21B AH
OTI VG019 LM
OTI VG020 LM
OTI VG119 LM
OTI VG120 LM
TE/TT 21A TI
TE/TT 21B TI
PDIT 21C IRAH
TE/TS 6B HSI-AH
PDIT 21D IAH
TE/TT 21E TI
OVG05FA DEMISTER
OVG04AA ELECTRIC HEATER
OVG06FA PRE-FILTER
OVG07FA HEPA FILTER
OVG08FA CHARCOAL ADSORBER
OVG11FA HEPA FILTER
OVG05FB DEMISTER
OVG04AB ELECTRIC HEATER
OVG06FB PRE FILTER
OVG07FB HEPA FILTER
OVG08FB CHARCOAL ADSORBER
OVG11FB HEPA FILTER
OVG01SA
OVG01SB
0CY89EA 3/4
0CY89EB 3/4
0CY89EC 3/4
0CY89ED 3/4
0CY89EE 3/4
M05-1012 SHT 7 B-4
M05-1012 SHT.7 B-4
M05-1012 SH.7 B-4
M05-1012 SHT 7 B-
M05-1054 SHT 32 D-6
M05-1054 SHT 32 D-5
M05-1054 SHT 32 D-4
M05-1054 SHT.32 D-4
M05-1054 SHT.32 D-3
M05-1054 SHT.32 D-1
M05-1054 SHT.32 D-7
M05-1054 SHT.32 D-6
M05-1054 SHT.31 D-2
M05-1054 SHT.31 D-3
M05-1054 SHT.31 D-5
M05-1054 SHT.31 D-6
M05-1052 SHT.5 E-5
M05-1062 SHT.5 E-8
M05-1064 SHT.10,D-1
M05-1064 SHT.8, E-1
M05-1064 SHT.8, E-6
M05-1064 SHT.10,C-8
M05-1054 SHT.34 D-3
M05-1054 SHT.34 D-7
0VG20A 2
0VG12A 2
0VG022A
0VG23A
0VG12A 2
0VG13A 2
0VG024A
0VG14A 2
0VG15A 2
0VG16A 2
0VG17A 3
0VG025A
0VG026A
0VG027A
0VG028A
0VG029A
0VG030A
0VG20B 2
0VG12B 2
0VG022B
0VG23B
0VG12B 2
0VG13B 2
0VG024B
0VG14B 2
0VG15B 2
0VG16B 2
0VG17B 3
0VG025B
0VG026B
0VG027B
0VG028B
0VG029B
0VG030B
2TF77A 2
2TF81A 2
2TF82A 2
2TF78A 2
2TF80A 2
2TF85A 2
2TF86A 2
2TF87A 2
ITF77A 2
ITF81A 2
ITF82A 2
ITF78A 2
ITF80A 2
ITF85A 3
ITF86A 2
ITF87A 2
ITF83A 2
ITF88A 2
0SX14AA 3
0SX14AB 3
0VG13A 2
0VG13B 2
0VG19A 2
0VG19B 2
0VG18A 2
0VG18B 2
CLASS 0
CLASS D
2.0" MIN.
20" MIN.
1/2" THREAD-O-LET WITH PLUG
3/4" THREAD-O-LET WITH PLUG
3x2 RED.
5x2 RED.
4000 CFM
350 CFM
CONTROL BLDG. ATMOSPHERE
350 CFM WHEN FAN 0VG03CA IS RUNNING
350 CFM WHEN FAN 0VG03CB IS RUNNING
PDIS 21F AL
ZS 1 HSI/ZL
ZS 7 HSI/ZL/XA
ZS 9 HSI/ZL/XA
ZS HSI/ZL/XA
ET-UITX 25
DFE VG001 LM
DAE PR006 LM
DAE PR009 LM
4 HSI/ZL
15 HSI
16 HSI
10 HSI/ZL
3 HSI/ZL/XA
9 HSI

NOTES:
1. I- MEANS OPEN ENDED PIPE
2. WHERE INDICATED PIPING LOOPS TO BE 20" OR GREATER.
3. FOR SAFETY CLASSIFICATION OF EQUIPMENT, SEE EQUIPMENT LIST.
   FOR SAFETY CLASSIFICATION OF PIPING / VALVES, SEE LINE / VALVE LIST.
   FOR SAFETY CLASSIFICATION OF DAMPERS, SEE APPROPRIATE DAMPER LIST.
4. DOP SAMPLE AND INJECTION MANIFOLDS ARE FABRICATED AND INSTALLED BY SPEC K-2882.

NOTE:
THE P&I D/C&I DIAGRAMS FOR THE C&I FUNCTION SYMBOLS ARE SHOWN ON DRAWING M10-0105 UNLESS NOTED. SHEET NUMBER & DIAGRAM REFERENCE ARE SHOWN IN THE FUNCTION SYMBOL.

NUCLEAR SAFETY RELATED
ITEMS ARE SHOWN ON THIS DRAWING
(FOR SAFETY CLASSIFICATION SEE PIPING, EQUIPMENT, VALVE, OR INSTRUMENT LISTS.)

CLINTON POWER STATION
UPDATED SAFETY ANALYSIS REPORT

FIGURE 3.6-1
DIVISIONAL SEPARATION AND
HIGH-ENERGY P&ID'S-
STANDBY GAS TREATMENT SYSTEM
SHEET 93 OF 111

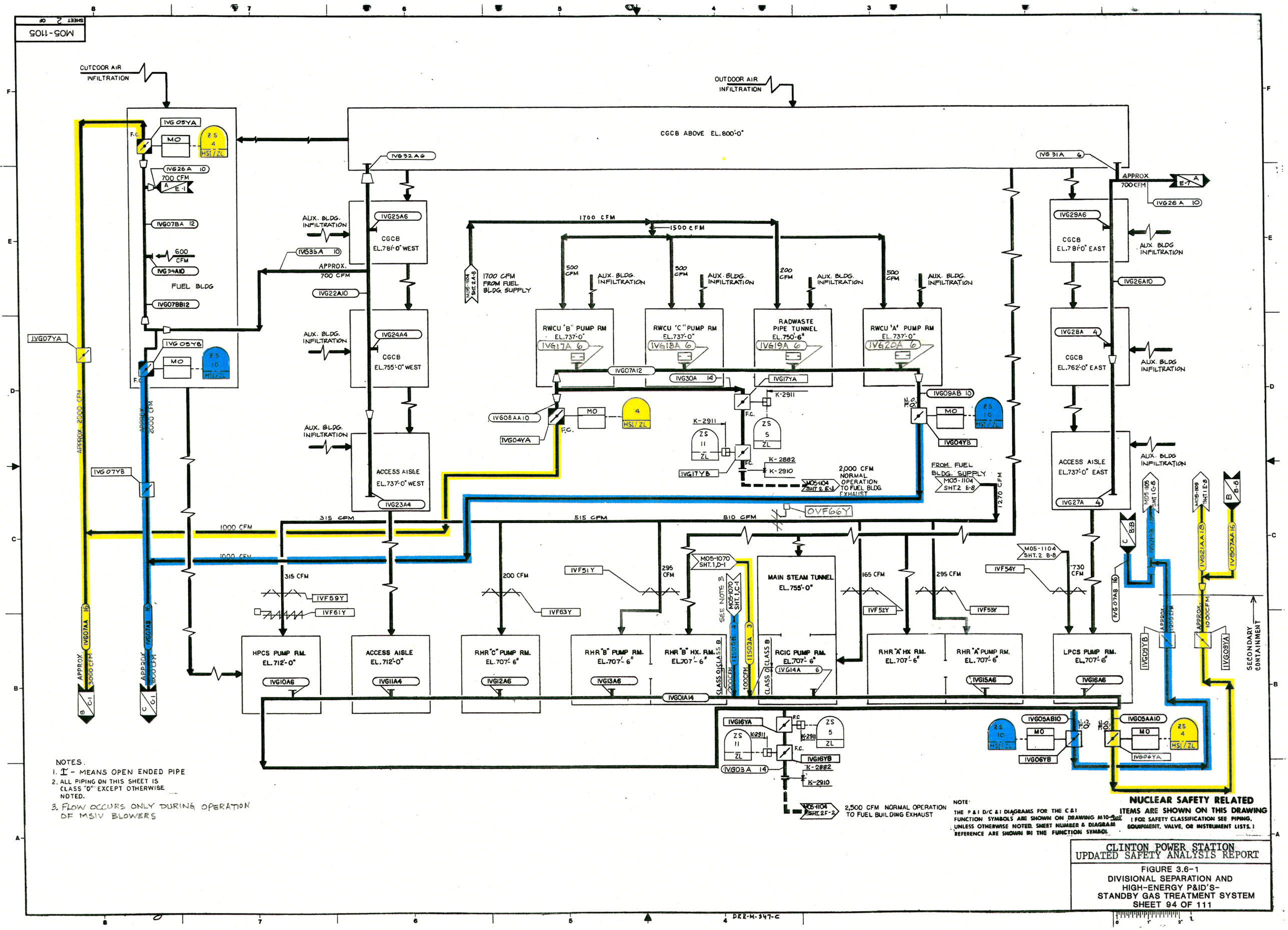
M05-1105
SHEET 2 OF
CUTDOOR AIR INFILTRATION
OUTDOOR AIR INFILTRATION
CGCB ABOVE EL. 800'-0"
FUEL BLDG
CGCB EL. 781'-0" WEST
CGCB EL. 755'-0" WEST
ACCESS AISLE EL. 737'-0" WEST
CGCB EL. 781'-0" EAST
CGCB EL. 762'-0" EAST
ACCESS AISLE EL. 737'-0" EAST
RWCU "B" PUMP RM EL. 737'-0"
RWCU "C" PUMP RM EL. 737'-0"
RADWASTE PIPE TUNNEL EL. 750'-6"
RWCU "A" PUMP RM EL. 737'-0"
MAIN STEAM TUNNEL EL. 755'-0"
HPCS PUMP RM. EL. 712'-0"
ACCESS AISLE EL. 712'-0"
RHR "C" PUMP RM. EL. 707'-6"
RHR "B" PUMP RM. EL. 707'-6"
RHR "B" HX. RM. EL. 707'-6"
RCIC PUMP RM. EL. 707'-6"
RHR "A" HX RM. EL. 707'-6"
RHR "A" PUMP RM. EL. 707'-6"
LPCS PUMP RM. EL. 707'-6"
1700 CFM FROM FUEL BLDG. SUPPLY
2,000 CFM NORMAL OPERATION TO FUEL BLDG. EXHAUST
2,500 CFM NORMAL OPERATION TO FUEL BUILDING EXHAUST
FROM FUEL BLDG. SUPPLY
SECONDARY CONTAINMENT
NOTES:
1. I - MEANS OPEN ENDED PIPE
2. ALL PIPING ON THIS SHEET IS CLASS "0" EXCEPT OTHERWISE NOTED.
3. FLOW OCCURS ONLY DURING OPERATION OF MSIV BLOWERS
NOTE:
THE P&I D/C&I DIAGRAMS FOR THE C&I FUNCTION SYMBOLS ARE SHOWN ON DRAWING M10-9105 UNLESS OTHERWISE NOTED. SHEET NUMBER & DIAGRAM REFERENCE ARE SHOWN IN THE FUNCTION SYMBOL
NUCLEAR SAFETY RELATED
ITEMS ARE SHOWN ON THIS DRAWING
(FOR SAFETY CLASSIFICATION SEE PIPING, EQUIPMENT, VALVE, OR INSTRUMENT LISTS.)
CLINTON POWER STATION
UPDATED SAFETY ANALYSIS REPORT
FIGURE 3.6-1
DIVISIONAL SEPARATION AND HIGH-ENERGY P&ID'S-
STANDBY GAS TREATMENT SYSTEM
SHEET 94 OF 111
DRR-M-347-C