CLINTON POWER STATION
FINAL SAFETY ANALYSIS REPORT
FIGURE 3.6-1
DIVISIONAL SEPARATION AND HIGH-ENERGY P&ID'S-NUCLEAR BOILER
SHEET 56 OF 111

REVISION 8
AUGUST 1999

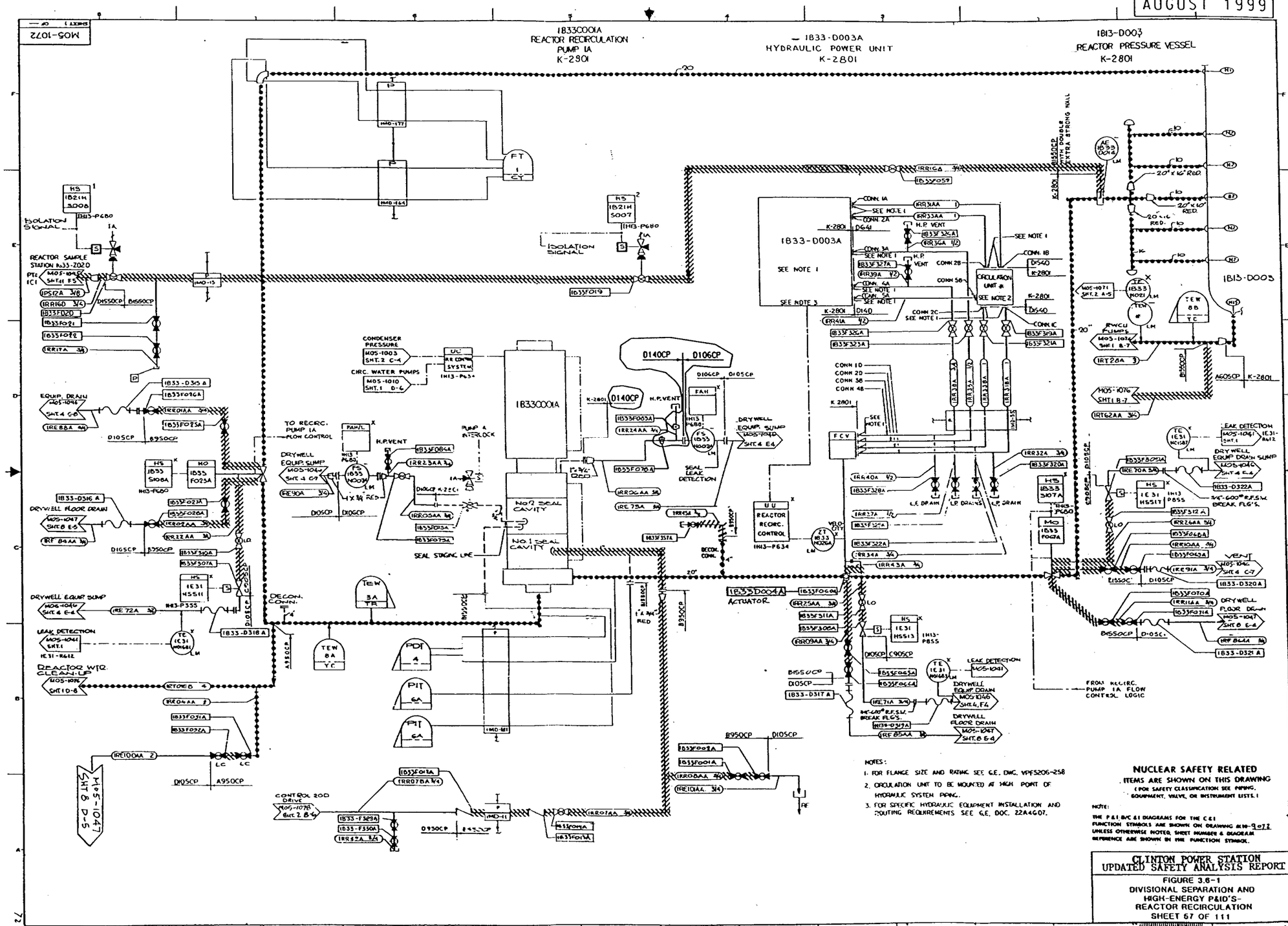

NOTES:

1. FOR FLANGE SIZE AND RATING SEE G.E. DWG. VPF5206-258
2. CIRCULATION UNIT TO BE MOUNTED AT HIGH POINT OF HYDRAULIC SYSTEM PIPING.
3. FOR SPECIFIC HYDRAULIC EQUIPMENT INSTALLATION AND ROUTING REQUIREMENTS SEE G.E. DOC. 22A4607.

NUCLEAR SAFETY RELATED
ITEMS ARE SHOWN ON THIS DRAWING
(FOR SAFETY CLASSIFICATION SEE PIPING, EQUIPMENT, VALVE, OR INSTRUMENT LISTS.)

NOTE:
THE P&I, B/C & I DIAGRAMS FOR THE C&I FUNCTION SYMBOLS ARE SHOWN ON DRAWING M10-9072 UNLESS OTHERWISE NOTED. SHEET NUMBER & DIAGRAM REFERENCE ARE SHOWN IN THE FUNCTION SYMBOL.

CLINTON POWER STATION
UPDATED SAFETY ANALYSIS REPORT

FIGURE 3.6-1
DIVISIONAL SEPARATION AND HIGH-ENERGY P&ID'S-
REACTOR RECIRCULATION
SHEET 67 OF 111

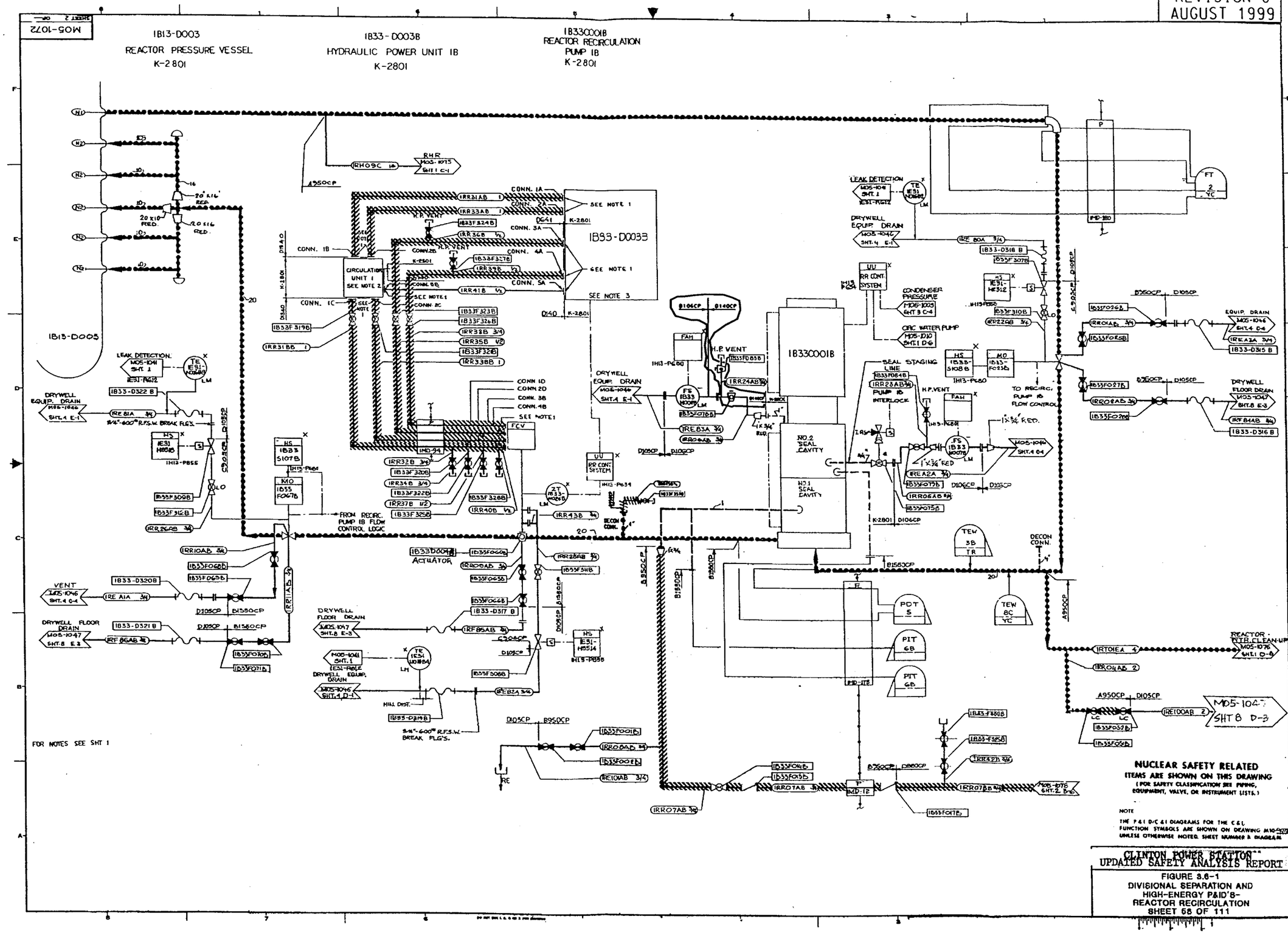

CLINTON POWER STATION
UPDATED SAFETY ANALYSIS REPORT

FIGURE 3.6-1
DIVISIONAL SEPARATION AND
HIGH-ENERGY P&ID'S-
REACTOR RECIRCULATION
SHEET 58 OF 111

REV. 2 SEPT. 1990

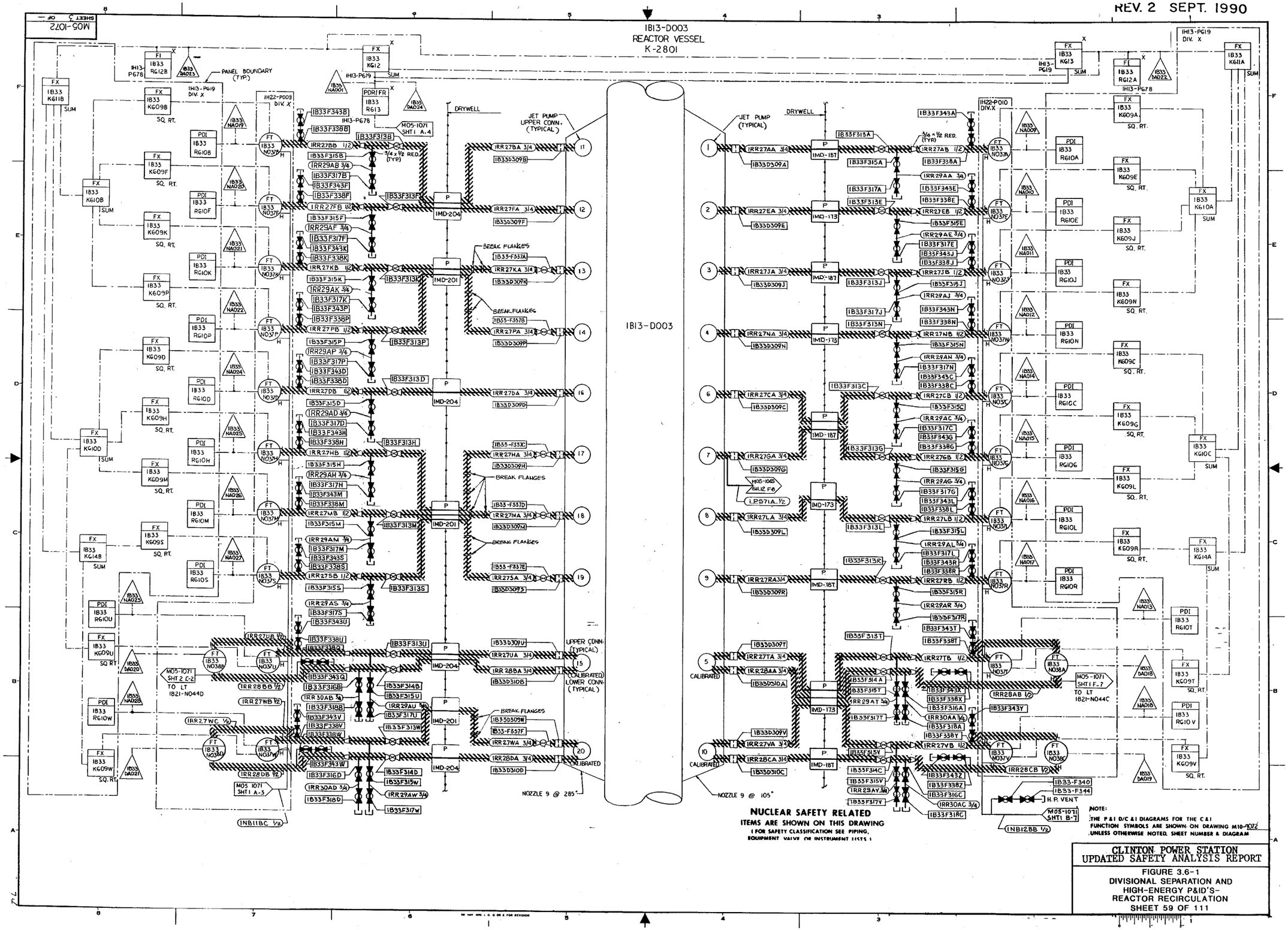

CLINTON POWER STATION
UPDATED SAFETY ANALYSIS REPORT

FIGURE 3.6-1
DIVISIONAL SEPARATION AND
HIGH-ENERGY P&ID'S-
REACTOR RECIRCULATION
SHEET 59 OF 111

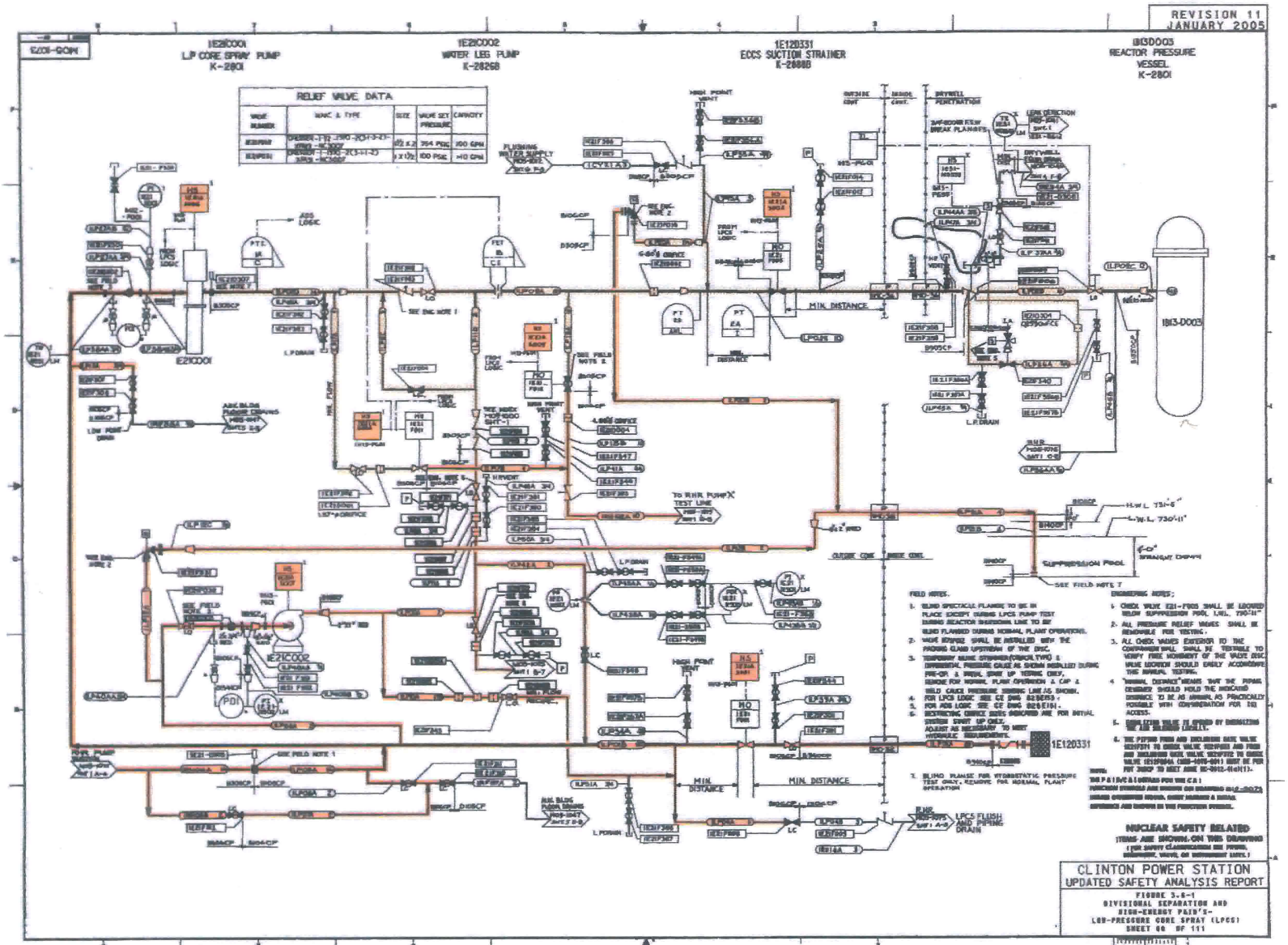
REVISION 11
JANUARY 2005
1E21C001
LP CORE SPRAY PUMP
K-2801
1E21C002
WATER LEG PUMP
K-2826B
1E120331
ECCS SUCTION STRAINER
K-2888B
1B13D003
REACTOR PRESSURE
VESSEL
K-2801
RELIEF VALVE DATA
MIN. DISTANCE
SUPPRESSION POOL
NUCLEAR SAFETY RELATED
CLINTON POWER STATION
UPDATED SAFETY ANALYSIS REPORT
FIGURE 3.6-1
DIVISIONAL SEPARATION AND
HIGH-ENERGY P&ID'S-
LOW-PRESSURE CORE SPRAY (LPCS)
SHEET 60 OF 111

REVISION 9
JANUARY 2001

RELIEF VALVE DATA					
VALVE NUMBER	MAKE & TYPE	SIZE	VALVE SET PRESSURE	BLOW DOWN (PSI)	CAPACITY
1E22F035	DRESSER 3/4-1970. 2(3-1-4-2) -XFA55-NC 3007	3/4"x1"	1560 PSIG.	FIXED	68 GPM.
1E22F039	DRESSER 3/4-1975-3(3-1-1-2) -XFA50-NC3007	3/4"x1"	1560 PSIG.	FIXED	10 GPM
1E22F014	DRESSER 3/4-1975 3(3-1-1-2) -XFA49-NC3007	3/4"x1"	100 PSIG	FIXED	10 GPM.

ENGINEERING NOTES:

1. CHECK VALVE 1E22-F024 SHALL BE LOCATED AT AN ELEVATION BELOW THE SUPPRESSION POOL LOW WATER LEVEL (730'-11").
2. ALL PRESSURE RELIEF VALVES SHALL BE REMOVABLE FOR TESTING.
3. ALL CHECK VALVES EXTERIOR TO THE CONTAINMENT SHALL BE TESTABLE TO VERIFY FREE MOVEMENT OF THE VALVE DISC. VALVE LOCATION SHOULD EASILY ACCOMMODATE THIS MANUAL TESTING.
4. "MINIMAL DISTANCE" MEANS THAT THE PIPING DESIGNER SHOULD HOLD THE INDICATED DISTANCE TO BE AS MINIMAL AS PRACTICALLY POSSIBLE, WITH CONSIDERATION FOR ISI ACCESS.
5. 1E22-R002 IS ABANDONED IN PLACE SEE FDDR LH1-4162-1 FOR DETAILS.
6. **EQUALIZING VALVE IS OPENED BY ENERGIZING THE AIR SOLENOID LOCALLY.**

FIELD NOTES:

1. VALVE 1E22F023 SHALL BE INSTALLED WITH THE PACKING GLAND ON THE UPSTREAM SIDE OF THE VALVE DISC.
2. TEMPORARY INLINE STRAINER (CONICAL TYPE) & DIFFERENTIAL PRESSURE GAUGE AS SHOWN INSTALLED DURING PRE-OP & INITIAL START UP TESTING ONLY. (SEE S&L STD. MF-270.51) REMOVE FOR NORMAL PLANT OPERATION & CAP & WELD GAUGE PRESSURE SENSING LINES AS SHOWN.
3. FOR HPCS LOGIC SEE GE DWG. 828E314-
4. SPOOL PIECE FOR TEMPORARY IN LINE STRAINER FOR PRE-OP & INITIAL START UP TESTING ONLY. REMOVE STRAINER FOR NORMAL PLANT OPERATION.
5. RESTRICTING ORIFICE SIZES INDICATED ARE FOR INITIAL SYSTEM START UP ONLY. ADJUST AS NECESSARY TO MEET HYDRAULIC REQUIREMENTS.
6. BLIND FLANGE FOR HYDROSTATIC PRESSURE TEST ONLY. REMOVE FOR NORMAL PLANT OPERATION.

NUCLEAR SAFETY RELATED
ITEMS ARE SHOWN ON THIS DRAWING
(FOR SAFETY CLASSIFICATION SEE PIPING, EQUIPMENT, VALVE, OR INSTRUMENT LISTS.)

NOTE

THE P&I D/C&I DIAGRAMS FOR THE C&I FUNCTION SYMBOLS ARE SHOWN ON DRAWING M10-9074 UNLESS OTHERWISE NOTED. SHEET NUMBER & DIAGRAM REFERENCE ARE SHOWN IN THE FUNCTION SYMBOL

CLINTON POWER STATION
UPDATED SAFETY ANALYSIS REPORT

FIGURE 3.6-1
DIVISIONAL SEPARATION AND HIGH-ENERGY P&ID'S-
HIGH-PRESSURE CORE SPRAY
SHEET 61 of 111

REVISION 12
1 JANUARY 2007

M05-1075

1E12C002A
RHR PUMP 1A
K2801

1E12D331
ECCS SUCTION STRAINER
K-2888B

1B13D003
REACTOR PRESSURE VESSEL
K-2801

RELIEF VALVE DATA				
VALVE NUMBER	DATA SHT NO	SIZE	VALVE SET PRESSURE	CAPACITY GPM
1E12F025A	RV-004A	1 1/2"x1"	477 PSIG	65 GPM
1E12F017A	RV-003A	1 1/2"x2"	200 PSIG	43 GPM
1E12F005	RV-003C	1 1/2"x2"	178 PSIG	40 GPM

FIELD NOTES:

1. VALVES 1E12F011A & 1E12F011B SHALL BE INSTALLED WITH PACKING GLANDS ON UPSTREAM SIDE OF DISC.
2. TEMPORARY INLINE STRAINER (CONICAL TYPE) & DIFFERENTIAL PRESSURE GAUGE AS SHOWN INSTALLED DURING PRE-OP. & INITIAL START UP TESTING ONLY. REMOVE FOR NORMAL PLANT OPERATION & CAP & WELD GAUGE PRESSURE SENSING LINES AS SHOWN. (SEE S & L STANDARD NF-270.9.1)
3. SPOOL PIECE FOR TEMPORARY INLINE STRAINER FOR PRE-OP & INITIAL START-UP TESTING ONLY. REMOVE STRAINER FOR NORMAL PLANT OPERATION. (REMOVED)
4. FOR RHR LOGIC SEE G.E. DWG. 828E304. FOR NUCLEAR STEAM SUPPLY SHUTOFF SYSTEM (NSSSS) LOGIC SEE G.E. DWG. 828E151.
5. INDICATED ORIFICE SIZES ARE FOR INITIAL-START UP & TESTING ONLY. FOR NORMAL OPERATION ADJUST AS REQUIRED TO MEET THE HYDRAULIC REQUIRMENTS OF THE SYSTEM.
6. BLIND FLANGES FOR HYDROSTATIC PRESSURE TESTING ONLY. REMOVE FOR NORMAL PLANT OPERATION.
7. SEE MECH. DEPT. PIPING SPECIALTY LIST.

ENGINEERING NOTES:

1. CHECK VALVES 1E12F031A & 1E12F031B & 1E12F031C SHALL BE LOCATED AT ELEVATION BELOW THE SUPPRESSION POOL LOW WATER LEVEL (730'-11")
2. ALL PRESSURE RELIEF VALVES SHALL BE REMOVABLE FOR TESTING.
3. ALL CHECK VALVES EXTERIOR TO THE CONTAINMENT SHALL BE TESTABLE TO VERIFY FREE MOVEMENT OF THE VALVE DISC. VALVE LOCATION SHOULD EASILY ACCOMODATE THIS MANUAL TESTING.
4. "MINIMAL DISTANCE" MEANS THAT THE PIPING DESIGNER SHOULD HOLD THE INDICATED DISTANCE TO BE AS MINIMAL AS PRACTICALLY POSSIBLE WITH CONSIDERATION GIVEN FOR ISI ACCESS.
5. DISCHARGE LINES FROM RELIEF VALVES 1E12F055A & 1E12-F055B SHALL NOT SLOPE UPWARD SUCH THAT WATER POCKETS EXIST.
6. STEAM INLET PIPING SHOULD SLOPE DOWNWARD CONTINUOUSLY FROM VALVES 1E12F052A & 1E12F052B TO HEAT EXCHANGERS.
7. # FURNISHED WITH ASSOCIATED EQUIPMENT.
8. ALL HIGH POINT VENTS SHALL BE TAPPED AT THE TOP OF THE PROCESS PIPE. ALL LOW POINT DRAINS SHALL BE TAPPED AT THE BOTTOM OF THE PROCESS PIPE.
9. SOCKET WELD CONNECTION TO BE PROVIDED FOR 1 1/2" MALE PIPE END OF DOUBLE BLOCK VALVE.
10. EQUALIZING VALVES ARE OPENED BY ENERGIZING THE AIR SOLENOID LOCALLY.
11. THE PIPING FROM AND INCLUDING GATE VALVE 1E12F531 TO CHECK VALVE 1E12F084B, FROM AND INCLUDING GATE VALVE 1E12F532 TO CHECK VALVE 1E12F084C, AND FROM AND INCLUDING GATE VALVE 1E12F372 (M05-1075, SHT.1) TO CHECK VALVE 1E12F084A MUST BE PER PDT 305CP TO MEET ASME NC-3612.4(a)(1) WHEN THE GATE VALVE IS CLOSED.

NUCLEAR SAFETY RELATED
ITEMS ARE SHOWN ON THIS DRAWING
(FOR SAFETY CLASSIFICATION SEE PIPING, EQUIPMENT, VALVE, OR INSTRUMENT LISTS.)

NOTE:
THE P&I D/C &I DIAGRAMS FOR THE C&I FUNCTION SYMBOLS ARE SHOWN ON DRAWING M10-9075 UNLESS OTHERWISE NOTED. SHEET NUMBER & DIAGRAM REFERENCE ARE SHOWN IN THE FUNCTION SYMBOL.

CLINTON POWER STATION
UPDATED SAFETY ANALYSIS REPORT
FIGURE 3.6-1
DIVISIONAL SEPARATION AND HIGH-ENERGY P&ID'S-
RESIDUAL HEAT REMOVAL
SHEET 62 OF 111

...\USAR\rev 12\FIG3 6-1-62.dgn 13/03/2006 09:22:32 AM

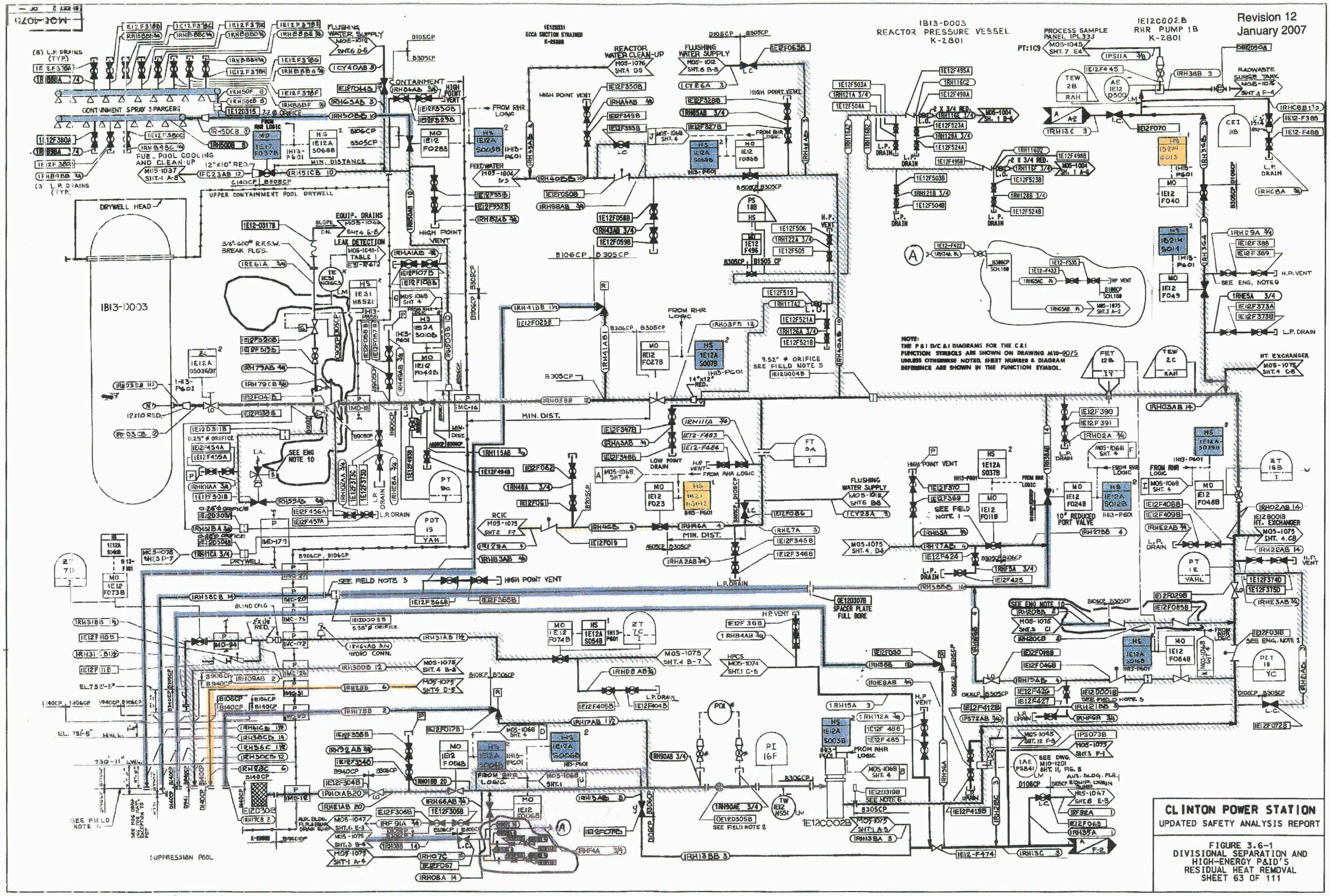

CLINTON POWER STATION
UPDATED SAFETY ANALYSIS REPORT

FIGURE 3.6-1
DIVISIONAL SEPARATION AND HIGH-ENERGY P&ID'S
RESIDUAL HEAT REMOVAL
SHEET 63 OF 111

..\USAR\rev 12\fig3-6-1-63.dgn 10/02/2006 03:18:09 PM

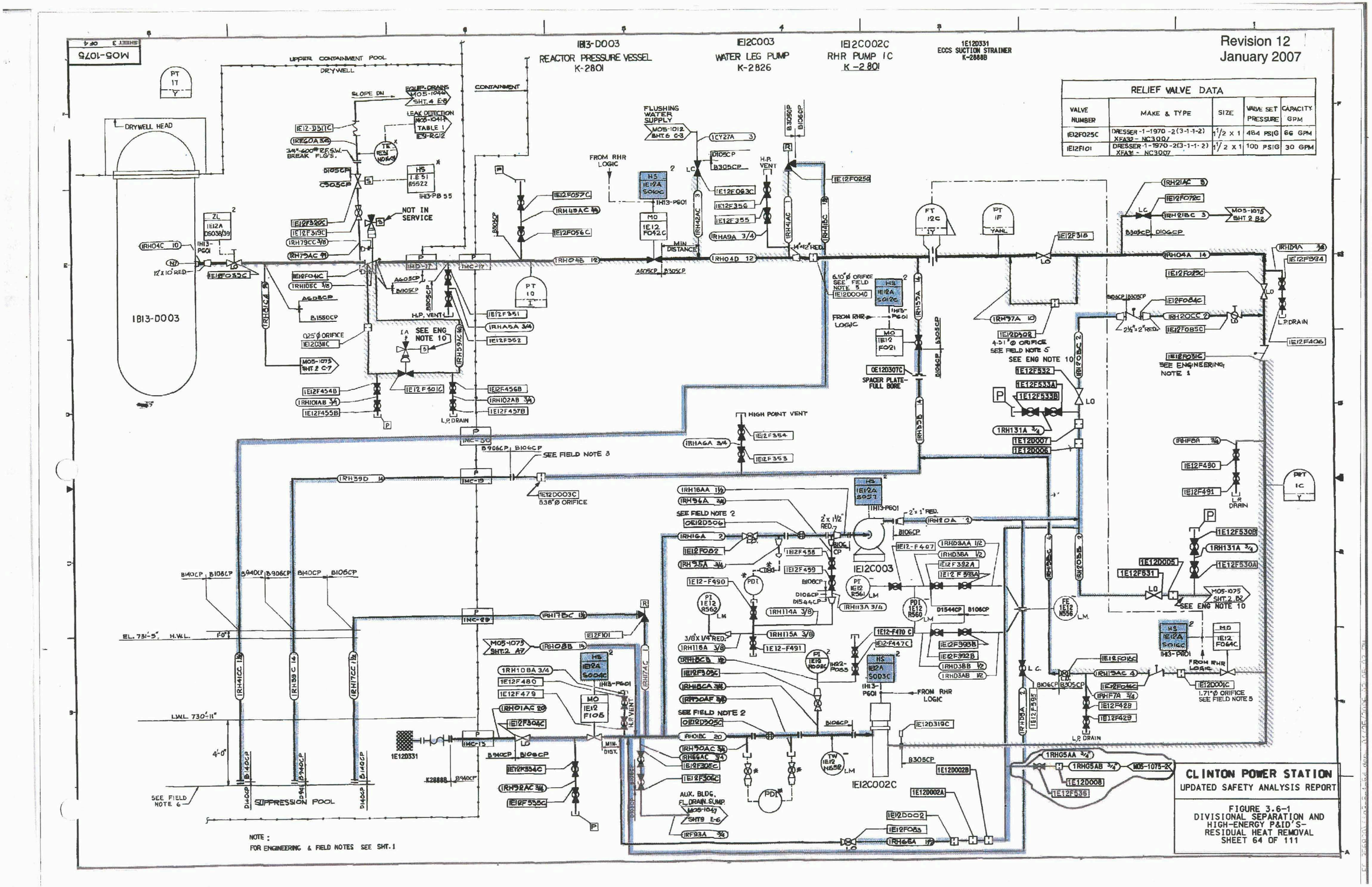

RELIEF VALVE DATA

VALVE NUMBER	MAKE & TYPE	SIZE	VALVE SET PRESSURE	CAPACITY GPM
1E12F025C	DRESSER-1-1970-2(3-1-1-2) XFA32-NC3007	1 1/2 x 1	484 PSIG	66 GPM
1E12F101	DRESSER-1-1970-2(3-1-1-2) XFA31-NC3007	1 1/2 x 1	100 PSIG	30 GPM

CLINTON POWER STATION
UPDATED SAFETY ANALYSIS REPORT

FIGURE 3.6-1
DIVISIONAL SEPARATION AND HIGH-ENERGY P&ID'S-RESIDUAL HEAT REMOVAL
SHEET 64 OF 111

REVISION 12
JANUARY 2007

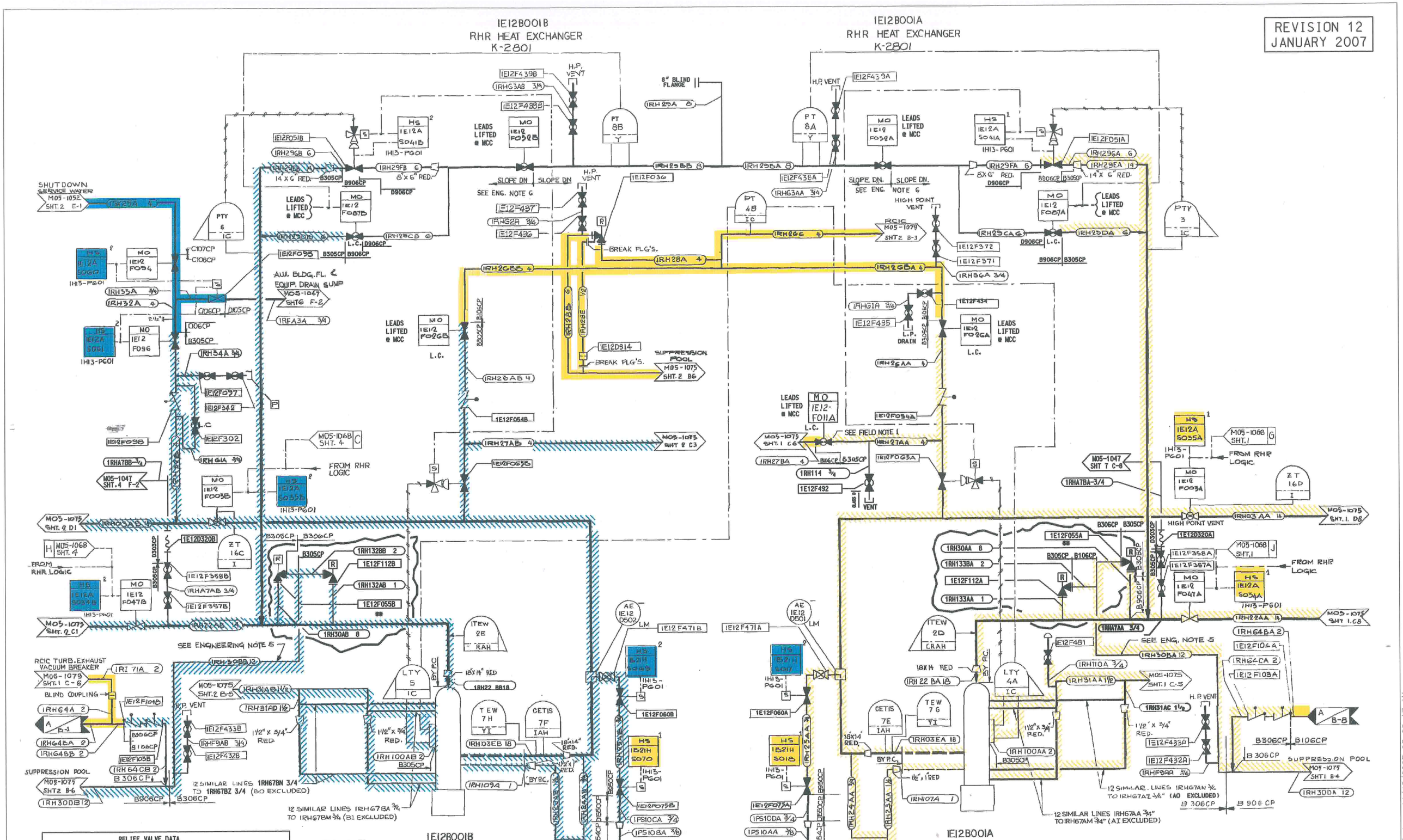

RELIEF VALVE DATA				
VALVE NUMBER	MAKE & TYPE	SIZE (IN.)	VALVE SET PRESSURE	CAPACITY
1E12F055A	CROSBY DS-C-64332	12 X 8	**	
1E12F055B	CROSBY DS-C-64332	12 X 8	**	
1E12F036	DRESSER 4-19101-1(1-1-3-2) -XNC3007	6 X 4	68 PSIG	374 GPM
1E12F112A	----------	1 X 2	474 PSIG	>6 GPM
1E12F112B	----------	1 X 2	474 PSIG	>6 GPM

** SHUT BY RAISING RELIEF SETPOINT

CLINTON POWER STATION
UPDATED SAFETY ANALYSIS REPORT

FIGURE 3.6-1
DIVISIONAL SEPARATION AND HIGH ENERGY P & ID'S - RESIDUAL HEAT REMOVAL
(SHEET 65 OF 111)

ENGINEERING NOTES:

1. WHEREVER POSSIBLE, VENT, DRAIN & RELIEF VALVE DISCHARGE PIPING SHALL DISCHARGE INTO CLOSED DRAINS.
2. "MINIMUM DISTANCE" MEANS THAT THE PIPING DESIGNER SHOULD HOLD THE INDICATED DISTANCE TO BE AS MINIMUM AS PRACTICALLY POSSIBLE, WITH CONSIDERATION FOR ISI ACCESS.
3. CONNECTIONS ARE PROVIDED FOR DECONTAMINATION OF SYSTEM EQUIPMENT.
4. STAINLESS STEEL RWCU PIPING SHALL NOT BE BENT. STANDARD FITTING SHALL BE USED.
5. FOR SAMPLE PROBE REQUIREMENTS SEE G.E. DOC. NO. 22A2708. FIG. 2
6. PRESSURE TAP SHALL BE OFF BOTTOM OF PROCESS PIPE.

FIELD NOTES:

1. ALL AIR OPERATED VALVES, EXCEPT THOSE LISTED IN NOTE NO. 2, SHALL BE INSTALLED WITH PROCESS FLUID FLOW FIRST ENTERING ABOVE VALVE SEAT.
2. AIR OPERATED VALVES 1G36F001, 1G36F002, 1G36F003, 1G36F005 1G36F007, 1G36F0014, 1G36F020 & 1G36F023 SHALL BE INSTALLED WITH FLOW FIRST ENTERING UNDER VALVE SEAT.
3. TEMPORARY STRAINER & DIFFERENTIAL PRESSURE GAUGE AS SHOWN INSTALLED FOR PRE-OP & INITIAL START-UP TESTING ONLY. REMOVE FOR NORMAL OPERATION.
4. FOR RWCU LOGIC SEE G.E. DWG. 762E407.
5. ALL HAND SWITCHES ON M05-1076 SHTS 2 & 3 ARE ON PANEL 1G36-P002 UNLESS OTHERWISE NOTED.
6. RESTRICTING ORIFICE SIZES INDICATED ARE FOR INITIAL SYSTEM START-UP ONLY. ADJUST AS NECESSARY TO MEET SYSTEM HYDRAULIC REQUIREMENTS.
7. ✱ FURNISHED WITH ASSOCIATED EQUIPMENT

RELIEF VALVE DATA

VALVE NUMBER	MAKE & TYPE	SIZE (INCHES)	VALVE SET (PSIG)
1G36F081A	CROSBY 1½ F2 JO-45WR	1½ X 2	1410
1G36F081B	CROSBY 1½ F2 JO-45WR	1½ X 2	1410
1G36F086	CROSBY 2J3 JO-25	2 X 3	150
1G36F087	CROSBY 1½ H3 JO-25	1½ X 3	150
1G36F085	CROSBY 3/4 JO-25	3 X 4	150
1G36F084	CROSBY 3/4 JO-25	3 X 4	150
1G33F036	DRESSER 3-1910K-1(1-1-3-2)-XFAB NC3007	3 X 4	150

NUCLEAR SAFETY RELATED
TEMS ARE SHOWN ON THIS DRAWING
(FOR SAFETY CLASSIFICATION SEE PIPING, EQUIPMENT, VALVE, OR INSTRUMENT LISTS.)

NOTE:
THE P&I D/C&I DIAGRAMS FOR THE C&I FUNCTION SYMBOLS ARE SHOWN ON DRAWING M10-9076 UNLESS OTHERWISE NOTED, SHEET NUMBER & DIAGRAM REFERENCE ARE SHOWN IN THE FUNCTION SYMBOL.

CLINTON POWER STATION
FINAL SAFETY ANALYSIS REPORT

FIGURE 3.6-1
DIVISIONAL SEPARATION AND
HIGH-ENERGY P&ID'S-
REACTOR WATER CLEAN-UP
SHEET 66 OF 111

REV. 2 SEPT. 1990

MO5-1076

IG36C001A & IG36C001B
REACTOR WATER CLEAN-UP
HOLDING PUMPS 1A & 1B
K-2801

IG36D001 & IG36D002
CLEAN-UP FILTER
DEMINERALIZERS
K-2801

IG36C001A

IG36C001B

IG36D001

IG36D002

NOTE: FOR ENGINEERING & FIELD NOTES SEE SHT. 1.

NUCLEAR SAFETY RELATED
ITEMS ARE SHOWN ON THIS DRAWING
(FOR SAFETY CLASSIFICATION SEE PIPING, EQUIPMENT, VALVE, OR INSTRUMENT LISTS.)

NOTE
THE P&I D/C &I DIAGRAMS FOR THE C&I FUNCTION SYMBOLS ARE SHOWN ON DRAWING M10-1076 UNLESS NOTED. SHEET NUMBER & DIAGRAM REFERENCE ARE SHOWN IN THE FUNCTION SYMBOL

CLINTON POWER STATION
UPDATED SAFETY ANALYSIS REPORT

FIGURE 3.6-1
DIVISIONAL SEPARATION AND
HIGH-ENERGY P&ID'S-
REACTOR WATER CLEAN-UP
SHEET 67 OF 111

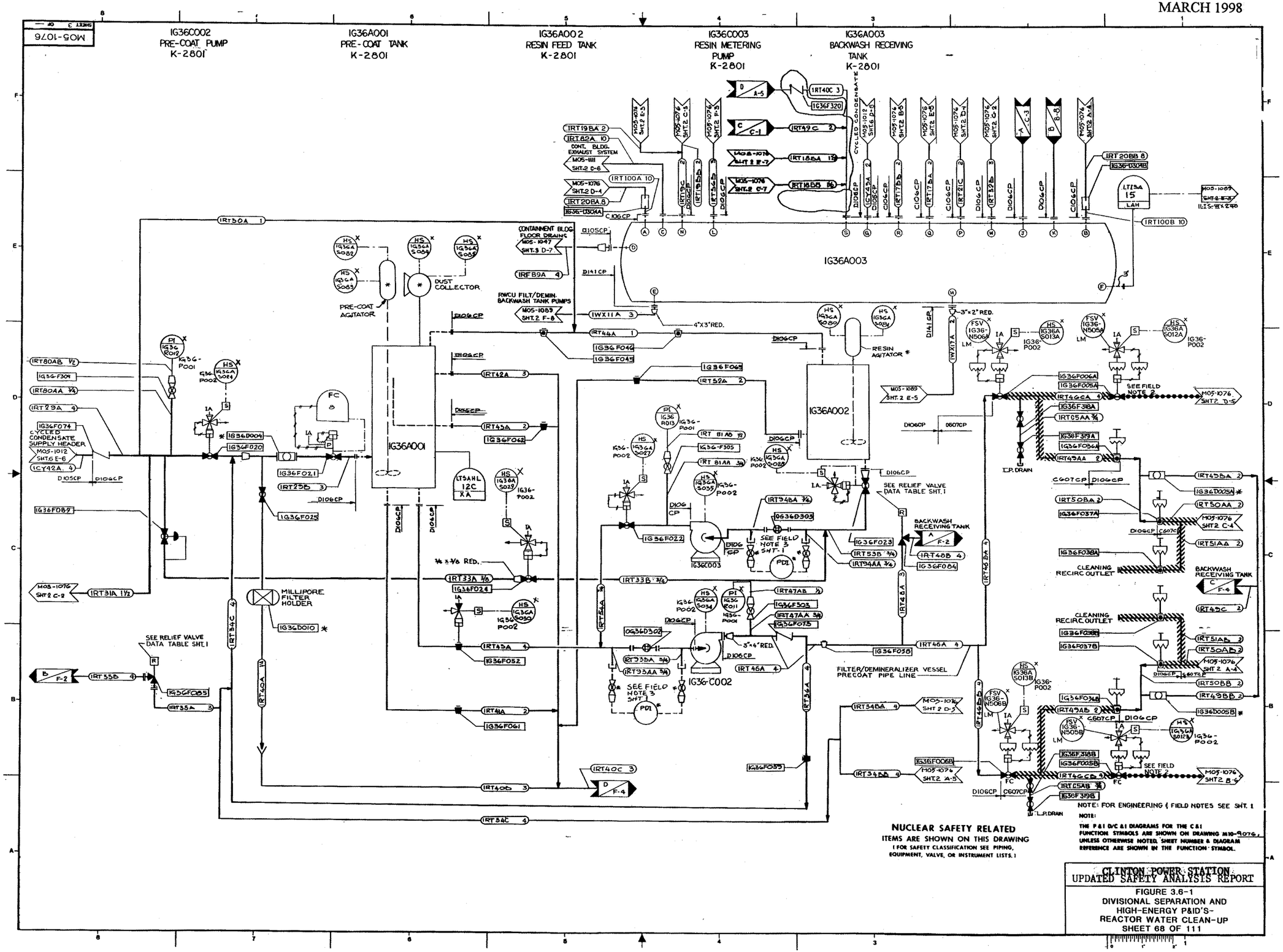

CLINTON POWER STATION
UPDATED SAFETY ANALYSIS REPORT

FIGURE 3.6-1
DIVISIONAL SEPARATION AND
HIGH-ENERGY P&ID'S-
REACTOR WATER CLEAN-UP
SHEET 68 OF 111

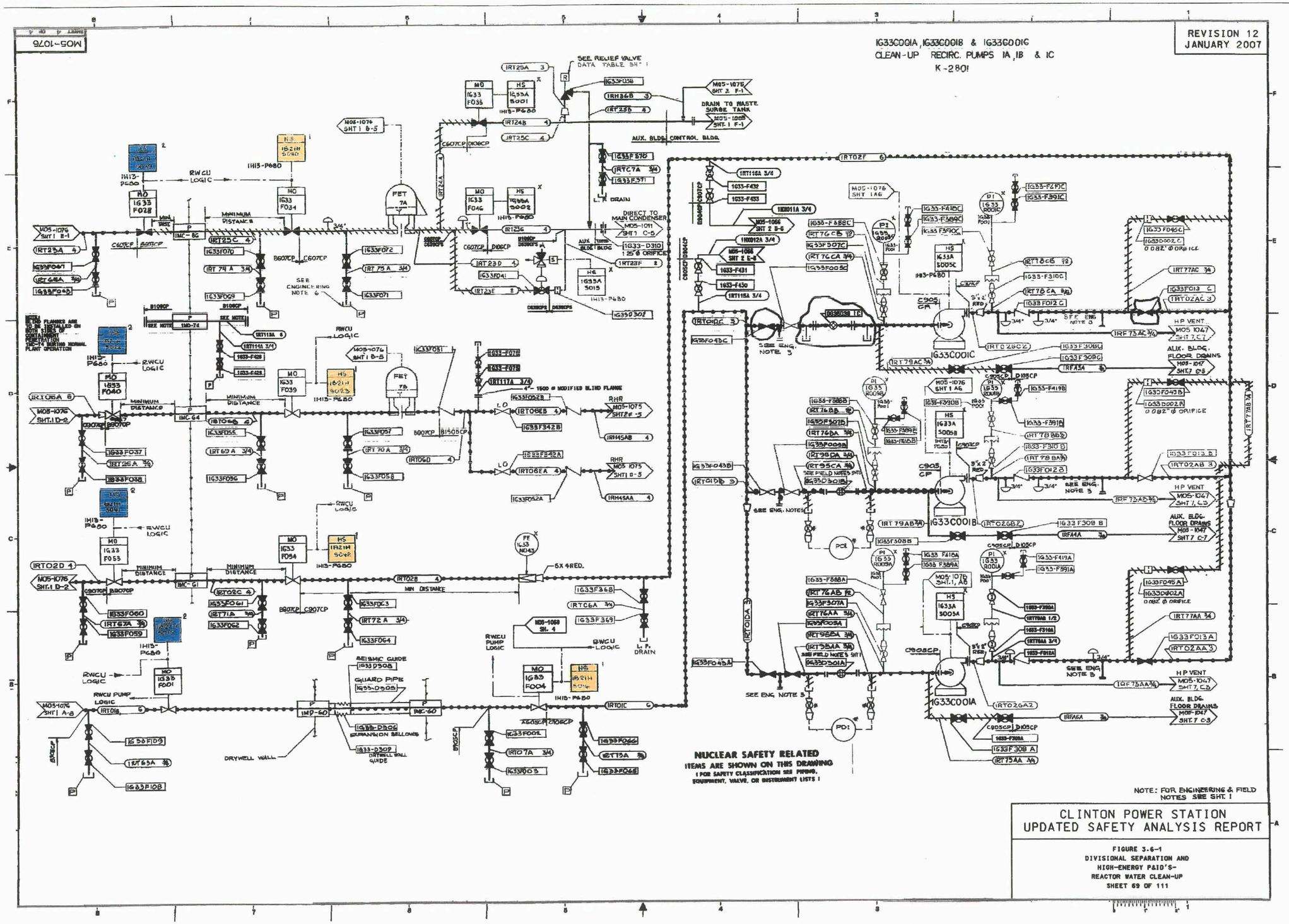

CLINTON POWER STATION
UPDATED SAFETY ANALYSIS REPORT

FIGURE 3.6-1
DIVISIONAL SEPARATION AND
HIGH-ENERGY P&ID'S-
REACTOR WATER CLEAN-UP
SHEET 69 OF 111

\USAR\rev 12\fig3-6-1-69.dgn 09/13/2006 09:19:23 AM

M05-1077

SHEET 1 OF 1

IC41A001 STANDBY LIQUID CONTROL STORAGE TANK K-2801

IC41A002 STANDBY LIQUID CONTROL TEST TANK K-2801

IC41C001A & IC41C001B
STANDBY LIQUID CONTROL
(PISTON TYPE)
PUMPS 1A & 1B
K-2801

**REVISION 7
JANUARY 1997**

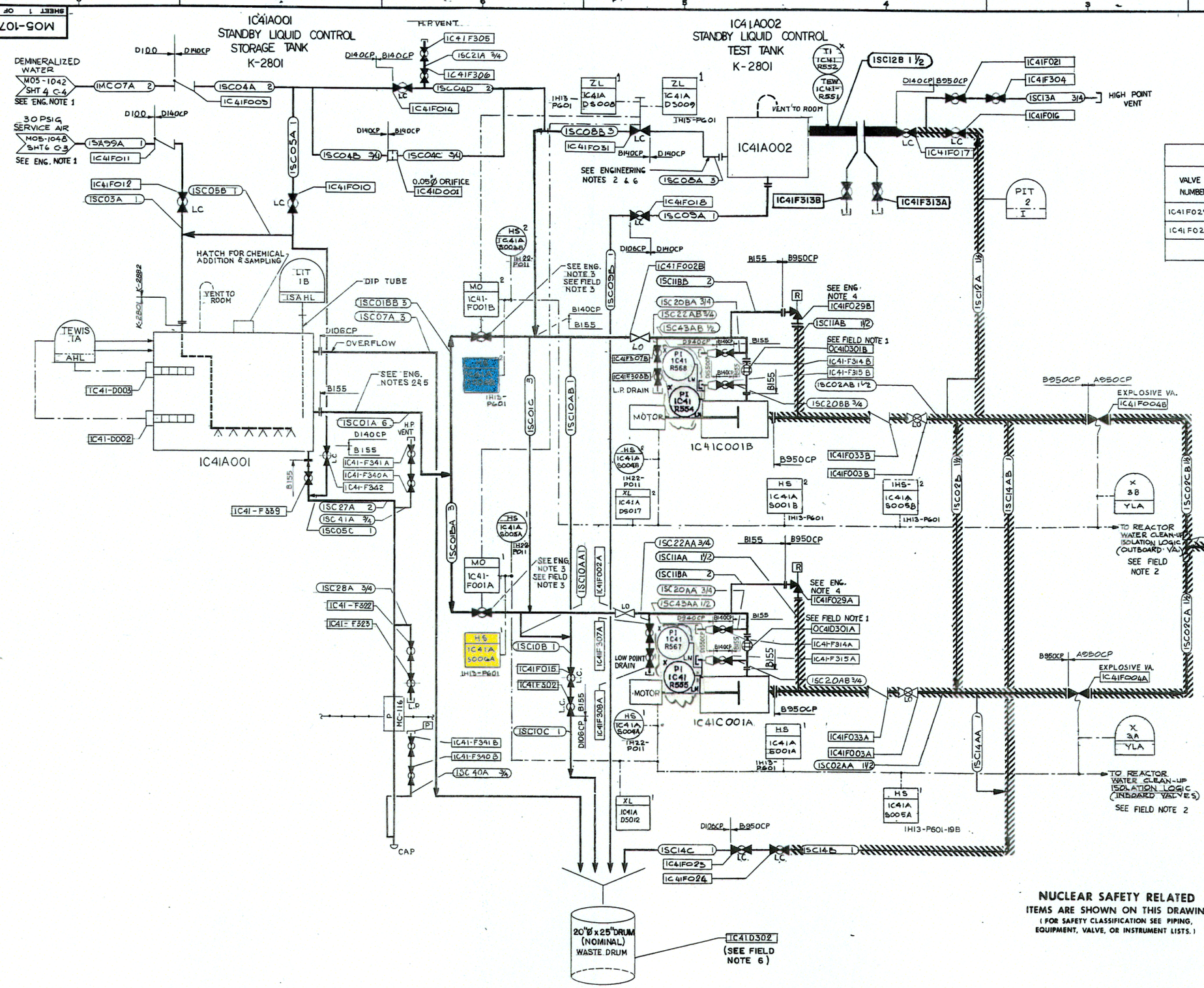

RELIEF VALVE DATA

VALVE NUMBER	MAKE & TYPE	SIZE INCHES	VALVE SET (PSIG) OPEN	% BLOW DOWN	CAPACITY GPM
IC41F029A	DRESSER MODEL 1970-XFA1B	1 1/2" x 2"	1400	10	43
IC41F029B	DRESSER MODEL 1970-XFA1B	1 1/2" x 2"	1400	10	43

NUCLEAR SAFETY RELATED ITEMS ARE SHOWN ON THIS DRAWING
(FOR SAFETY CLASSIFICATION SEE PIPING, EQUIPMENT, VALVE, OR INSTRUMENT LISTS.)

ENGINEERING NOTES :

1. THE ELEVATION OF THE DEMINERALIZED WATER & SERVICE AIR SUPPLY LINES SHALL BE ABOVE THE TOP OF THE STORAGE TANK (IC41A001).
2. SUCTION PIPING FROM THE STORAGE TANK & TEST TANK SHALL SLOPE CONTINOUSLY DOWNWARD TO THE PUMPS TO ENSURE PROPER VENT CAPABILITY.
3. THE MOTOR OPERATED PUMP SUCTION VALVES (IC41F001A & IC41F001B) SHALL BE LOCATED AS CLOSE AS PRACTICAL TO THE STORAGE TANK.
4. ALL RELIEF VALVE END CONNECTIONS SHALL BE FLANGED TO FACILITATE REMOVAL FOR BENCH TESTING.
5. ACTUAL LENGTH OF SUCTION PIPING BETWEEN STORAGE TANK OUTLET & EITHER PUMP INLET SHALL NOT EXCEED 12 FEET.
6. ACTUAL LENGTH OF SUCTION PIPING BETWEEN TEST TANK OUTLET & EITHER PUMP INLET SHALL NOT EXCEED 12 FEET.

FIELD NOTES :

1. TEMPORARY INLINE STRAINER (CONICAL TYPE) & DIFFERENTIAL PRESSURE GAUGE AS SHOWN INSTALLED DURING PRE-OP. & INITIAL START-UP TESTING ONLY. REMOVE FOR NORMAL PLANT OPERATION & CAP & WELD GAUGE PRESSURE SENSING LINES.
2. FOR SLC LOGIC SEE G.E. DWG. 762E434.
   FOR RWCU LOGIC SEE G.E. DWG 828E151.
3. VALVES IC41F001A & IC41F001B SHALL BE INSTALLED SO THAT THEIR STEM PACKINGS ARE NOT EXPOSED TO SODIUM PENTABORATE SOLUTION WHEN VALVES ARE IN NORMALLY CLOSED POSITION.
4. * FURNISHED WITH ASSOCIATED EQUIPMENT.
5. TEMPORARY INLINE STRAINER (CONICAL TYPE) INSTALLED DURING PRE-OP AND TESTING ONLY REPLACE WITH A PIPING SPOOL PIECE.
6. **AFTER EACH USE THE SLC WASTE DRUM SHALL BE DRAINED.**

NOTE:
THE P&I D/C & I DIAGRAMS FOR THE C&I FUNCTION SYMBOLS ARE SHOWN ON DRAWING M10-9077 UNLESS OTHERWISE NOTED. SHEET NUMBER & DIAGRAM REFERENCE ARE SHOWN IN THE FUNCTION SYMBOL.

CLINTON POWER STATION
UPDATED SAFETY ANALYSIS REPORT

FIGURE 3.6-1
DIVISIONAL SEPARATION AND
HIGH-ENERGY P&ID'S-
STANDBY LIQUID CONTROL
SHEET 70 OF 111

3.8

2-CC 1

DO NOT USE 1, 0, 9 OR X FOR REVISION

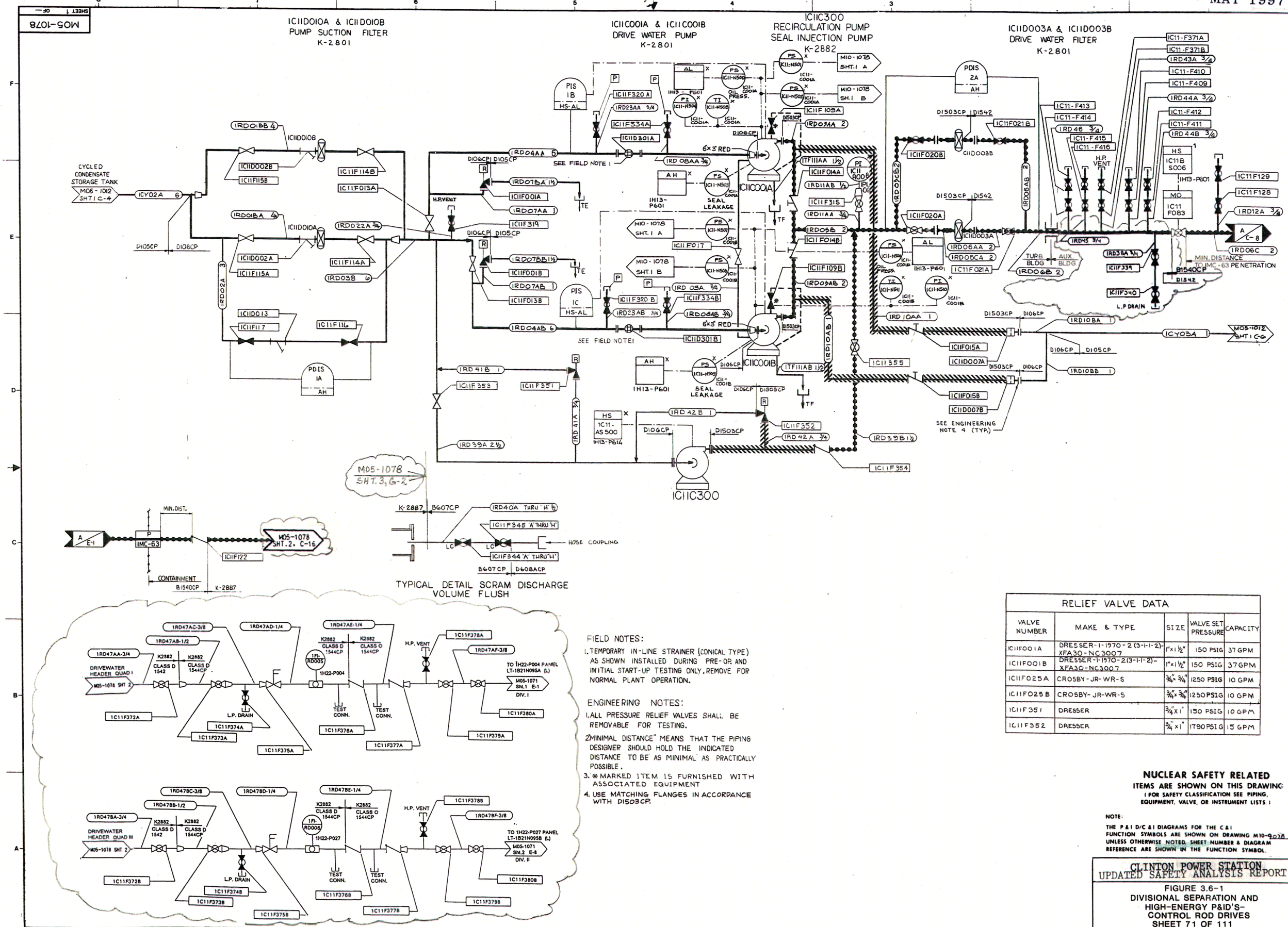

FIELD NOTES:

1. TEMPORARY IN-LINE STRAINER (CONICAL TYPE) AS SHOWN INSTALLED DURING PRE-OP. AND INITIAL START-UP TESTING ONLY. REMOVE FOR NORMAL PLANT OPERATION.

ENGINEERING NOTES:

1. ALL PRESSURE RELIEF VALVES SHALL BE REMOVABLE FOR TESTING.
2. "MINIMAL DISTANCE" MEANS THAT THE PIPING DESIGNER SHOULD HOLD THE INDICATED DISTANCE TO BE AS MINIMAL AS PRACTICALLY POSSIBLE.
3. * MARKED ITEM IS FURNISHED WITH ASSOCIATED EQUIPMENT
4. USE MATCHING FLANGES IN ACCORDANCE WITH D1503CP.

RELIEF VALVE DATA

VALVE NUMBER	MAKE & TYPE	SIZE	VALVE SET PRESSURE	CAPACITY
1C11F001A	DRESSER-1-1970-2 (3-1-1-2)-XFA30-NC3007	1"x1½"	150 PSIG	37 GPM
1C11F001B	DRESSER-1-1970-2 (3-1-1-2)-XFA30-NC3007	1"x1½"	150 PSIG	37 GPM
1C11F025A	CROSBY-JR-WR-S	¾"x¾"	1250 PSIG	10 GPM
1C11F025B	CROSBY-JR-WR-S	¾"x¾"	1250 PSIG	10 GPM
1C11F351	DRESSER	¾"x1"	150 PSIG	10 GPM
1C11F352	DRESSER	¾"x1"	1790 PSIG	15 GPM

NUCLEAR SAFETY RELATED
ITEMS ARE SHOWN ON THIS DRAWING
(FOR SAFETY CLASSIFICATION SEE PIPING, EQUIPMENT, VALVE, OR INSTRUMENT LISTS.)

NOTE:
THE P&I D/C&I DIAGRAMS FOR THE C&I FUNCTION SYMBOLS ARE SHOWN ON DRAWING M10-9078 UNLESS OTHERWISE NOTED. SHEET NUMBER & DIAGRAM REFERENCE ARE SHOWN IN THE FUNCTION SYMBOL.

CLINTON POWER STATION
UPDATED SAFETY ANALYSIS REPORT

FIGURE 3.6-1
DIVISIONAL SEPARATION AND HIGH-ENERGY P&ID'S-CONTROL ROD DRIVES
SHEET 71 OF 111

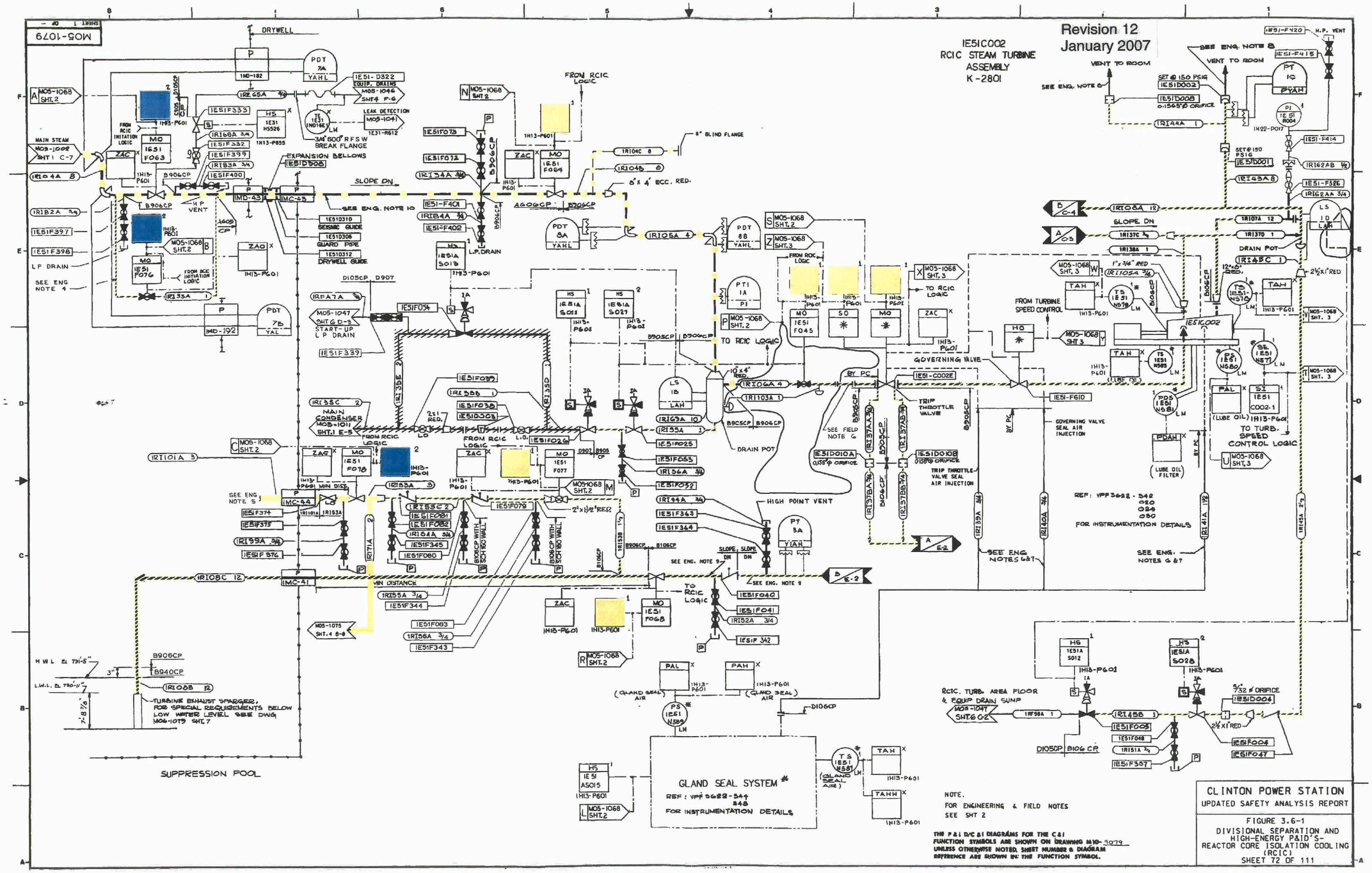

NOTE.
FOR ENGINEERING & FIELD NOTES
SEE SHT 2

THE P&I D/C &I DIAGRAMS FOR THE C&I FUNCTION SYMBOLS ARE SHOWN ON DRAWING M10-9079 UNLESS OTHERWISE NOTED. SHEET NUMBER & DIAGRAM REFERENCE ARE SHOWN IN THE FUNCTION SYMBOL.

CLINTON POWER STATION
UPDATED SAFETY ANALYSIS REPORT

FIGURE 3.6-1
DIVISIONAL SEPARATION AND HIGH-ENERGY P&ID'S-
REACTOR CORE ISOLATION COOLING (RCIC)
SHEET 72 OF 111

REVISION 12
JANUARY 2007

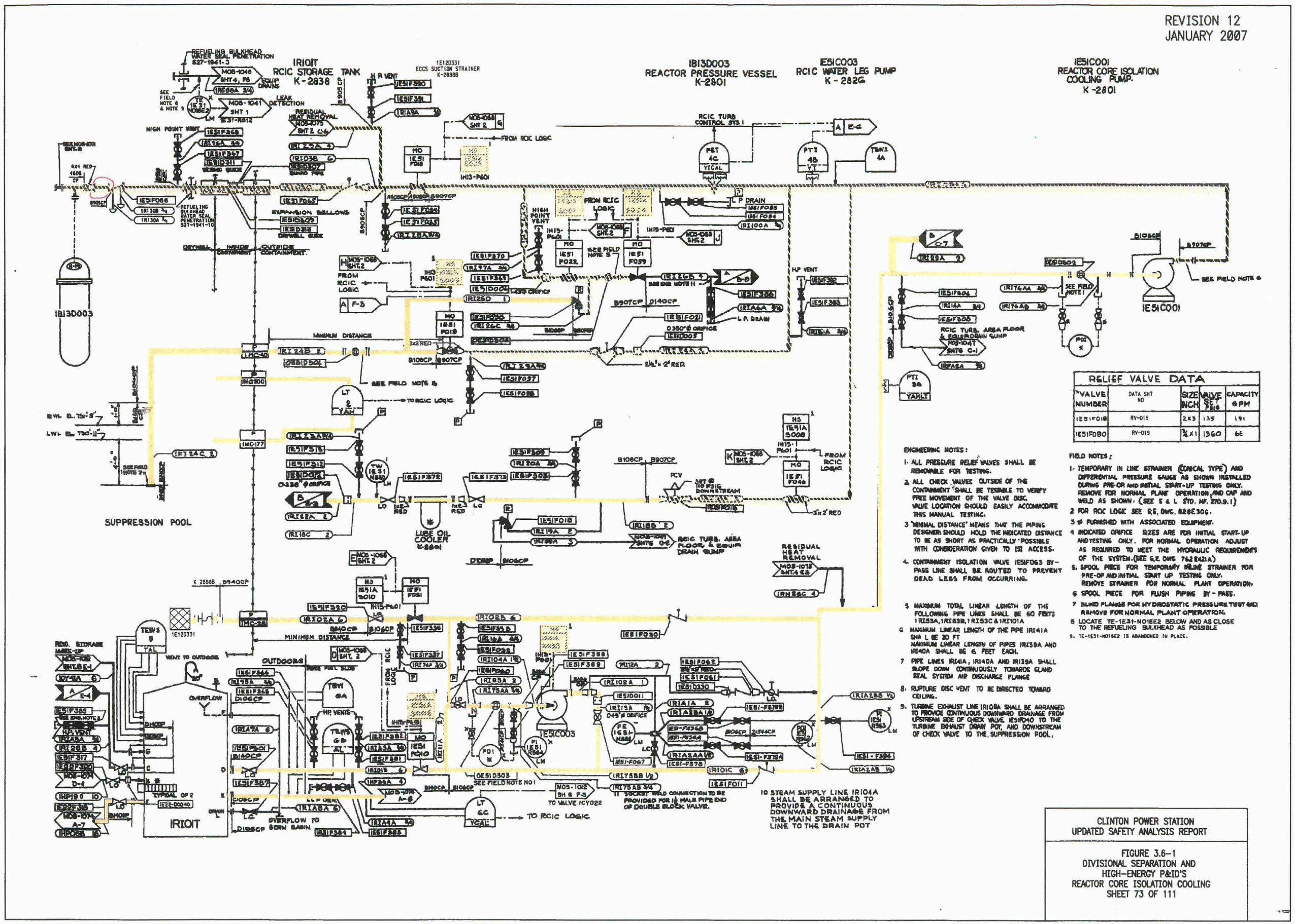

RELIEF VALVE DATA				
VALVE NUMBER	DATA SHT NO	SIZE INCH	VALVE SET PRESS	CAPACITY GPM
1E51F018	RV-015	2X3	135	191
1E51F080	RV-019	¾X1	1360	66

ENGINEERING NOTES:

1. ALL PRESSURE RELIEF VALVES SHALL BE REMOVABLE FOR TESTING.
2. ALL CHECK VALVES OUTSIDE OF THE CONTAINMENT SHALL BE TESTABLE TO VERIFY FREE MOVEMENT OF THE VALVE DISC. VALVE LOCATION SHOULD EASILY ACCOMMODATE THIS MANUAL TESTING.
3. 'MINIMAL DISTANCE' MEANS THAT THE PIPING DESIGNER SHOULD HOLD THE INDICATED DISTANCE TO BE AS SHORT AS PRACTICALLY POSSIBLE WITH CONSIDERATION GIVEN TO ISI ACCESS.
4. CONTAINMENT ISOLATION VALVE 1E51F063 BY-PASS LINE SHALL BE ROUTED TO PREVENT DEAD LEGS FROM OCCURRING.
5. MAXIMUM TOTAL LINEAR LENGTH OF THE FOLLOWING PIPE LINES SHALL BE 60 FEET: 1R133A, 1RE83B, 1R183C & 1RI101A
6. MAXIMUM LINEAR LENGTH OF THE PIPE 1RI41A SHALL BE 30 FT MAXIMUM LINEAR LENGTH OF PIPES 1RI39A AND 1RI40A SHALL BE 6 FEET EACH.
7. PIPE LINES 1RI41A, 1RI40A AND 1RI39A SHALL SLOPE DOWN CONTINUOUSLY TOWARDS GLAND SEAL SYSTEM AIR DISCHARGE FLANGE
8. RUPTURE DISC VENT TO BE DIRECTED TOWARD CEILING.
9. TURBINE EXHAUST LINE 1RI08A SHALL BE ARRANGED TO PROVIDE CONTINUOUS DOWNWARD DRAINAGE FROM UPSTREAM SIDE OF CHECK VALVE 1E51F040 TO THE TURBINE EXHAUST DRAIN POT, AND DOWNSTREAM OF CHECK VALVE TO THE SUPPRESSION POOL.
10. STEAM SUPPLY LINE 1RI04A SHALL BE ARRANGED TO PROVIDE A CONTINUOUS DOWNWARD DRAINAGE FROM THE MAIN STEAM SUPPLY LINE TO THE DRAIN POT

FIELD NOTES:

1. TEMPORARY IN LINE STRAINER (CONICAL TYPE) AND DIFFERENTIAL PRESSURE GAUGE AS SHOWN INSTALLED DURING PRE-OP AND INITIAL START-UP TESTING ONLY. REMOVE FOR NORMAL PLANT OPERATION, AND CAP AND WELD AS SHOWN. (SEE S & L STD. MP. 270.9.1)
2. FOR RCIC LOGIC SEE G.E. DWG. 828E306.
3. # FURNISHED WITH ASSOCIATED EQUIPMENT.
4. INDICATED ORIFICE SIZES ARE FOR INITIAL START-UP AND TESTING ONLY. FOR NORMAL OPERATION ADJUST AS REQUIRED TO MEET THE HYDRAULIC REQUIREMENTS OF THE SYSTEM. (SEE G.E. DWG 762E421A)
5. SPOOL PIECE FOR TEMPORARY INLINE STRAINER FOR PRE-OP AND INITIAL START UP TESTING ONLY. REMOVE STRAINER FOR NORMAL PLANT OPERATION.
6. SPOOL PIECE FOR FLUSH PIPING BY-PASS.
7. BLIND FLANGE FOR HYDROSTATIC PRESSURE TEST ONLY REMOVE FOR NORMAL PLANT OPERATION.
8. LOCATE TE-1E31-N016E2 BELOW AND AS CLOSE TO THE REFUELING BULKHEAD AS POSSIBLE
9. TE-1E31-N016E2 IS ABANDONED IN PLACE.

CLINTON POWER STATION
UPDATED SAFETY ANALYSIS REPORT

FIGURE 3.6-1
DIVISIONAL SEPARATION AND
HIGH-ENERGY P&ID'S
REACTOR CORE ISOLATION COOLING
SHEET 73 OF 111

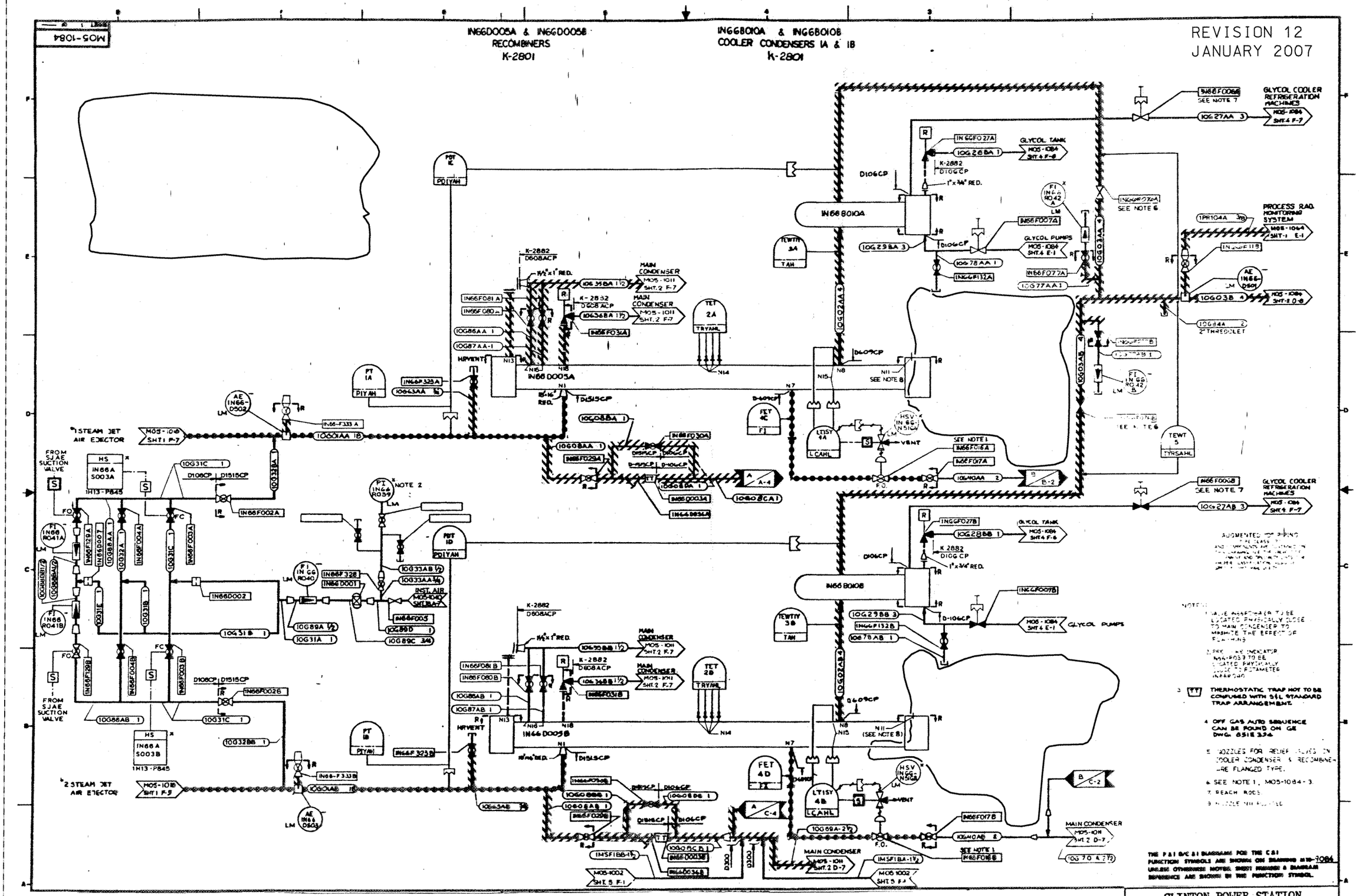

CLINTON POWER STATION
UPDATED SAFETY ANALYSIS REPORT

FIGURE 3.6-1
DIVISIONAL SEPARATION AND
HIGH-ENERGY P&ID'S-
OFF - GAS
SHEET 74 OF 111

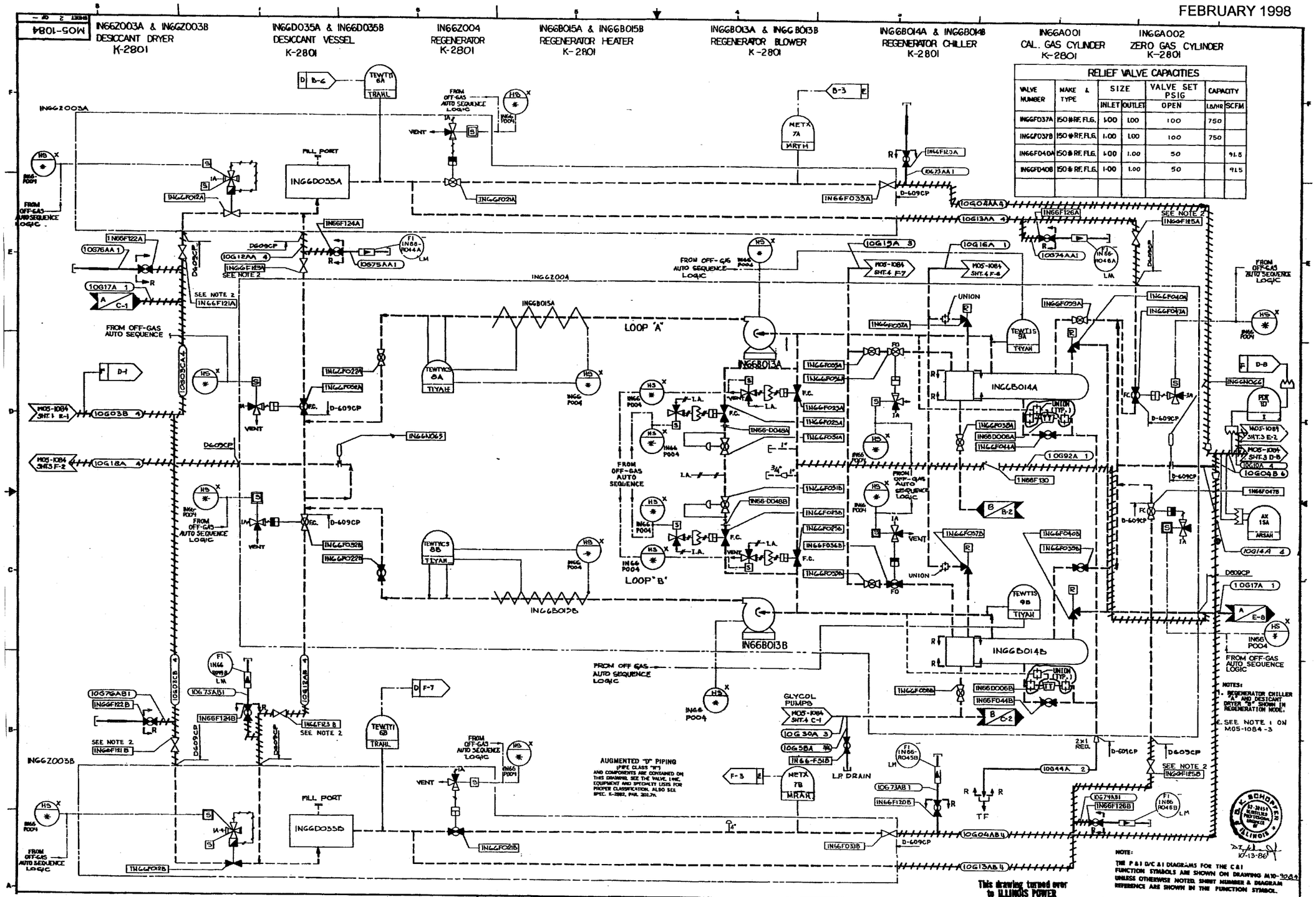

RELIEF VALVE CAPACITIES						
VALVE NUMBER	MAKE & TYPE	SIZE		VALVE SET PSIG	CAPACITY	
		INLET	OUTLET	OPEN	LB/HR	SCFM
IN66F037A	150# RF. FLG.	1.00	1.00	100	750	
IN66F037B	150# RF. FLG.	1.00	1.00	100	750	
IN66F040A	150# RF. FLG.	1.00	1.00	50		91.5
IN66F040B	150# RF. FLG.	1.00	1.00	50		91.5

CLINTON POWER STATION
UPDATED SAFETY ANALYSIS REPORT

FIGURE 3.6-1
DIVISIONAL SEPARATION AND
HIGH-ENERGY P&ID'S-
OFF - GAS
SHEET 75 OF 111

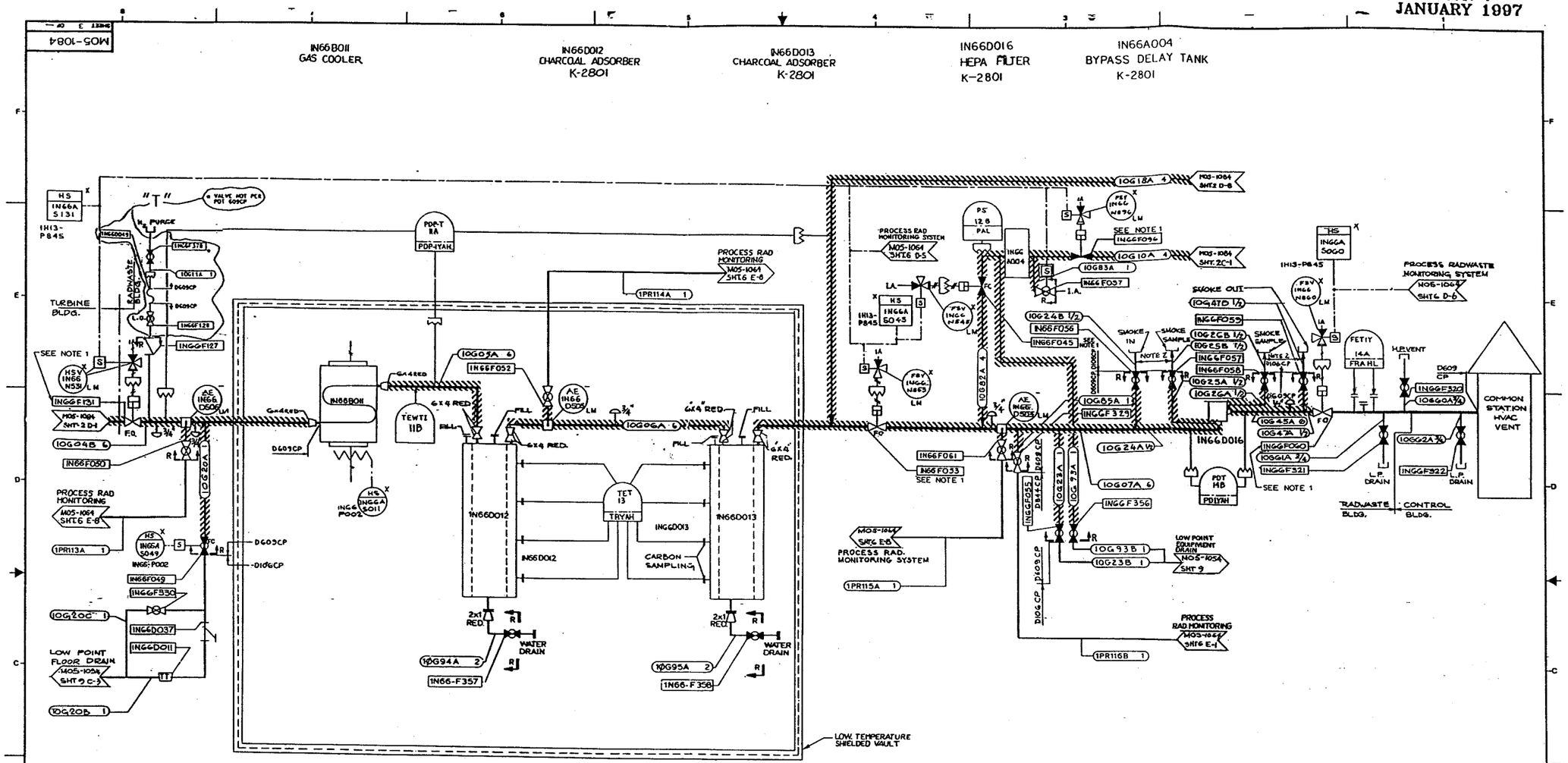

NOTE: 1 THE FOLLOWING OFF-GAS VALVES REQUIRE PRESSURIZATION, WITH INSTRUMENT AIR, OF THE DOUBLE PACKING LEAK-OFF CONNECTION:

TYPICAL PRESSURIZATION OF VALVE PACKING

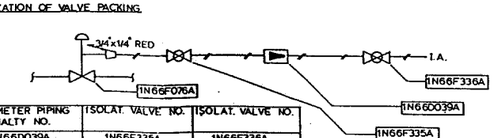

CONTROL VALVE NO.	ROTAMETER PIPING SPECIALTY NO.	ISOLAT. VALVE NO.	ISOLAT. VALVE NO.
1N66F076A	1N66D039A	1N66F335A	1N66F336A
1N66F076B	1N66D039B	1N66F335B	1N66F336B
1N66F121A	1N66D040A	1N66F337A	1N66F338A
1N66F121B	1N66D040B	1N66F337B	1N66F338B
1N66F123A	1N66D041A	1N66F339A	1N66F340A
1N66F123B	1N66D041B	1N66F339B	1N66F340B
1N66F125A	1N66D042A	1N66F341A	1N66F342A
1N66F125B	1N66D042B	1N66F341B	1N66F342B
1N66F045	1N66D043	1N66F343	1N66F344
1N66F096	1N66D044	1N66F345	1N66F346
1N66F131	1N66D045	1N66F347	1N66F348
1N66F053	1N66D046	1N66F349	1N66F350
1N66F060	1N66D047	1N66F351	1N66F352

NOTES CONT.

2. PROVIDE PROTECTIVE DUST COVER OR PLUGGED ML4-K26 HANSEN PLUG.

AUGMENTED "D" PIPING
(PIPE CLASS "K")
AND COMPONENTS ARE CONTAINED ON THIS DRAWING. SEE THE VALVE, LINE, EQUIPMENT AND SPECIALTY LISTS FOR PROPER CLASSIFICATION. ALSO SEE SPEC. K-2882, PAR. 201.7a.

NOTE:

THE P&I D/C & I DIAGRAMS FOR THE C&I FUNCTION SYMBOLS ARE SHOWN ON DRAWING M10-9084 UNLESS OTHERWISE NOTED. SHEET NUMBER & DIAGRAM REFERENCE ARE SHOWN IN THE FUNCTION SYMBOL.

CLINTON POWER STATION
UPDATED SAFETY ANALYSIS REPORT

FIGURE 3.6-1
DIVISIONAL SEPARATION AND HIGH-ENERGY P&ID'S-
OFF - GAS
SHEET 76 OF 111

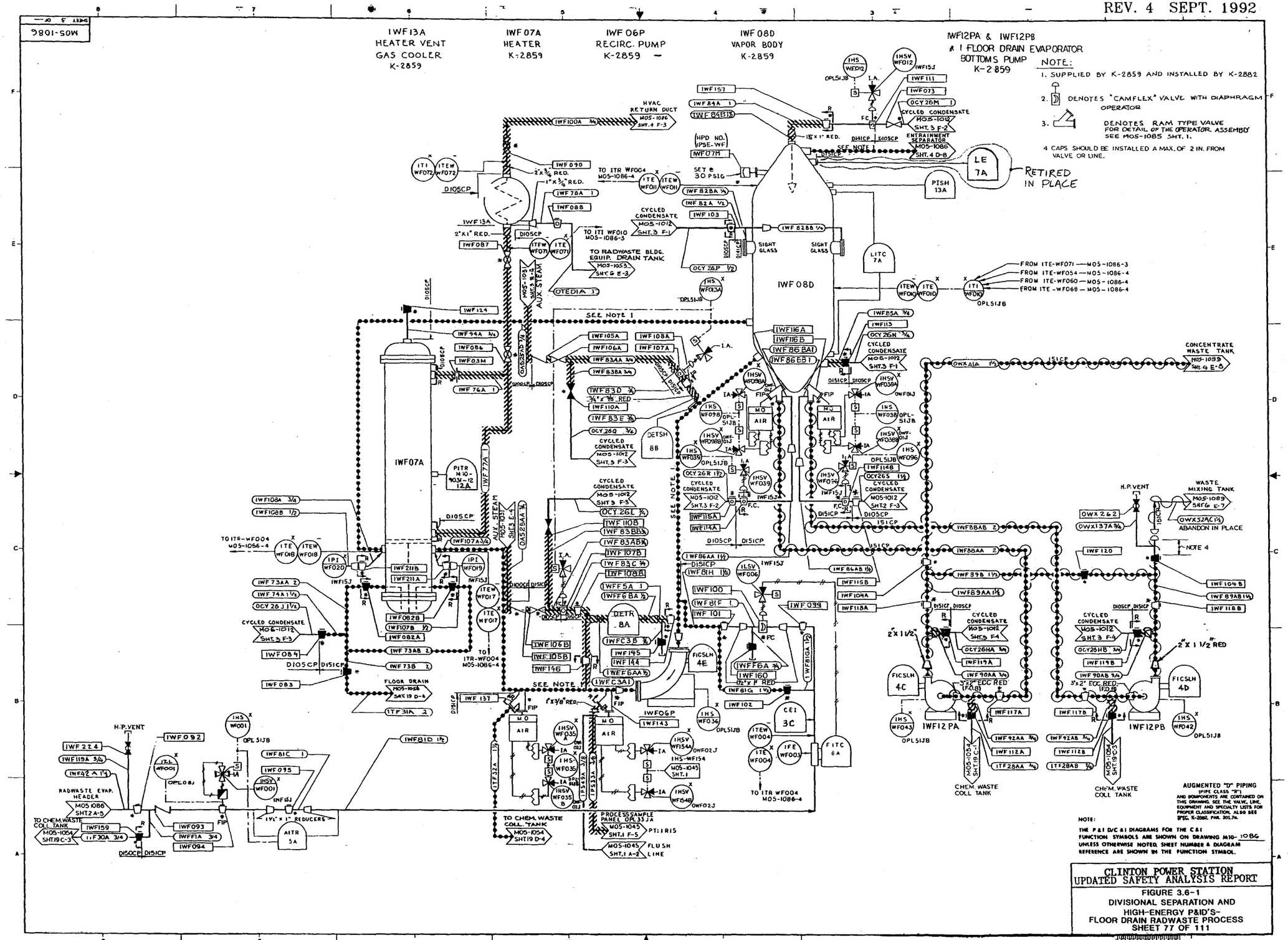

CLINTON POWER STATION
UPDATED SAFETY ANALYSIS REPORT

FIGURE 3.6-1
DIVISIONAL SEPARATION AND
HIGH-ENERGY P&ID'S-
FLOOR DRAIN RADWASTE PROCESS
SHEET 77 OF 111

REV. 2 SEPT. 1990

M05-1086

IWF09D ENTRAINMENT SEPARATOR K-2859

IWF05PA DISTILLATE PUMP K-2859

IWF17T CONDENSER DRAIN POT K-2859

IWF10A CONDENSER K-2859

IWF14A CONDENSER VENT GAS COOLER K-2859

IWF05PB DISTILLATE PUMP K-2859

IWF11A SUBCOOLER K-2859

IWF15J

IKSV WF046

IHS WF046

IKC WF046A

IKC WF046B

OPL51JB

IWF127

IWF128

IWF129

OCY 26U 1

M05-1012 SHT 3 F-2

CYCLED CONDENSATE

IWF95A 1

IWF95C 1

IWF131

D105CP

D141CP

D100GP

IWF95D 1

IWF130D

IWF95E 1

IWF130C

IWF95BC 1

IWF130B

IWF95BB 1

IWF130A

IWF96BA 3/4

IWF96CA 1/4

IWF96BB 1/4

IWF96CB 1/4

VENT TO ROOM

IWF133

IWF57A 3/4

IWF96A V2

IWF132

OCY 26T V2

1/2"x1/4" RED. (TYP.)

SIGHT GLASSES

PDTIAH 9A

IWF09D

SEE NOTE 2

UNIT 1 FLOOR DRAIN EVAP. VAPOR BODY M05-1086 SHT.3 E-3

IWF215

4'-0"

ITF25A 2

ITF028

ITF26A 3/4

ITEW WF048

ITE WF048

ITA WF004

OPL51JB

M05-1031-3 FROM ITE-WF026 FROM ITE-WF017 ITE-WF018 ITE-WF011 ITE-WF004

M05-1086-3

M05-1086-4 FROM ITE-WF052 ITE-WF062A

IWF17T

LTCAH 10A

A

IWF99CB V2

IWF149

IWF99CA 3/4

IWF99B 1/2

IWF98A 2

IWF98AA 1/2

IWF98AB 1/2

M05-1054 SHT.19-D-5

IWF136A

IWF135A

1½" x 1" RED.

2" x 1½" RED.

IHS WF057

OPL51JB

IWF05PA

IWF06MA

SEE NOTE 1

IWF134A

IWF98BA 2

IWF82AA 3/4

RADWASTE BLDG. EQUIP. DRAIN TANK

M05-1053 SHT.8 B-5

IWF163A

ITE77AA 3/4

IWF136B

IWF135B

1½" x 1" RED.

2" x 1½" RED.

IWF06MB

SEE NOTE 1

IHS WF058

OPL51JB

IWF05PB

IWF134B

IWF98BB 2

IWF82AB 3/4

RADWASTE BLDG. EQUIP. DRAIN TANK

M05-1053 SHT.8 B-5

IWF163B

ITE77AB 3/4

IWF156

ITI WF069

ITEW WF069

2" x ¾" RED. IWF14A

D141CP

M05-1086 SHT.3 F-4

IWF100A 3/4

IWF102A 3/4

IWF101A 1

D105CP

M05-1114 SHT.2 C-3 HVAC RETURN DUCT

IWF150

IWFA8A 1

M05-1089 SHT.4 F-5 CONCENTRATE WASTE TANK

IWF125

ITF 27A 1

M05-1054 SHT.19 F-4 CHEM. WASTE COLL. TANK

IWFA9A 1

TO ITI-WF010 M05-1086-3

TO ITR-WF004 M05-1086-4

ITE WF068

ITEW WF068

IWFA7B 3/4

IWFA6B 3/4

IWFA6A 3/4

IWF141

IWF147

IWFA7AA 3/4

IWF142B

IWFB2A 3/4

IWF148

IWFB3A 3/4

IWFA5A 3/4

IWF139

IWF138

IWF110A V2

IWF110

IWF109A 3/4

IWF142A

IWF10A

141CP

TO ITI-WF010 M05-1086-3

ITE WF060

ITEW WF060

3"x1½" RED.

3"x1" RED.

IWF11A

IPI WF059

IWFB7B 1

IWFB6A 1½

IWFE3A 3/4

D140CP

IWF189

IPS34A 3/8

PROCESS SAMPLE PANEL OPL33JA M05-1045 SHT.1 F-5 PT:1R16

CEIS 10B

FITX 11A

ILSV WF056A

OWF15J

IWF152A

IWF153A

IWFB6BA 1½

IWF154A

IWFB6CA 1

IWF151A

IHS WF088

H.P.VENT

OPL51JB

IWF220

IWF115A 3/4

UNIT 1 FLOOR DRAIN EVAPORATOR MONITOR TANK M05-1086 SHT.5 F-7

IWFB6BA 1½

IWFB6CA 1

IWF151A

IWF221

IWF116A 3/4

UNIT 1 FLOOR DR. SURGE TANK M05-1086 SHT 1 F-1

IWFB6BB 1½

IWFB6CB 1

IWF151B

IFE WF061

1½"x1" RED.

IHS WF089

H.P.VENT

OPL51JB

ITEW WF062

ITE WF062A

ITE WF062B

ITSH WF062B

TO ITR WF004 M05-1086-4

IWFB6BB 1½

IWF153B

IWF152B

IWF154B

IWF155

NOTE:
1. REFER TO NOTE 4 ON M05-1086 SHT.1
2. REFER TO NOTE 1 ON M05-1086 SHT.3

AUGMENTED "D" PIPING (PIPE CLASS "B") AND COMPONENTS ARE CONTAINED ON THIS DRAWING. SEE THE VALVE, LINE, EQUIPMENT AND SPECIALTY LISTS FOR PROPER CLASSIFICATION. ALSO SEE SPEC. E-2882, PARL 202.7h.

NOTE:
THE P & I D/C & I DIAGRAMS FOR THE C & I FUNCTION SYMBOLS ARE SHOWN ON DRAWING M10-9086 UNLESS OTHERWISE NOTED. SHEET NUMBER & DIAGRAM REFERENCE ARE SHOWN IN THE FUNCTION SYMBOL.

CLINTON POWER STATION
UPDATED SAFETY ANALYSIS REPORT

FIGURE 3.6-1
DIVISIONAL SEPARATION AND HIGH-ENERGY P&ID'S-
FLOOR DRAIN RADWASTE PROCESS
SHEET 20 OF 44

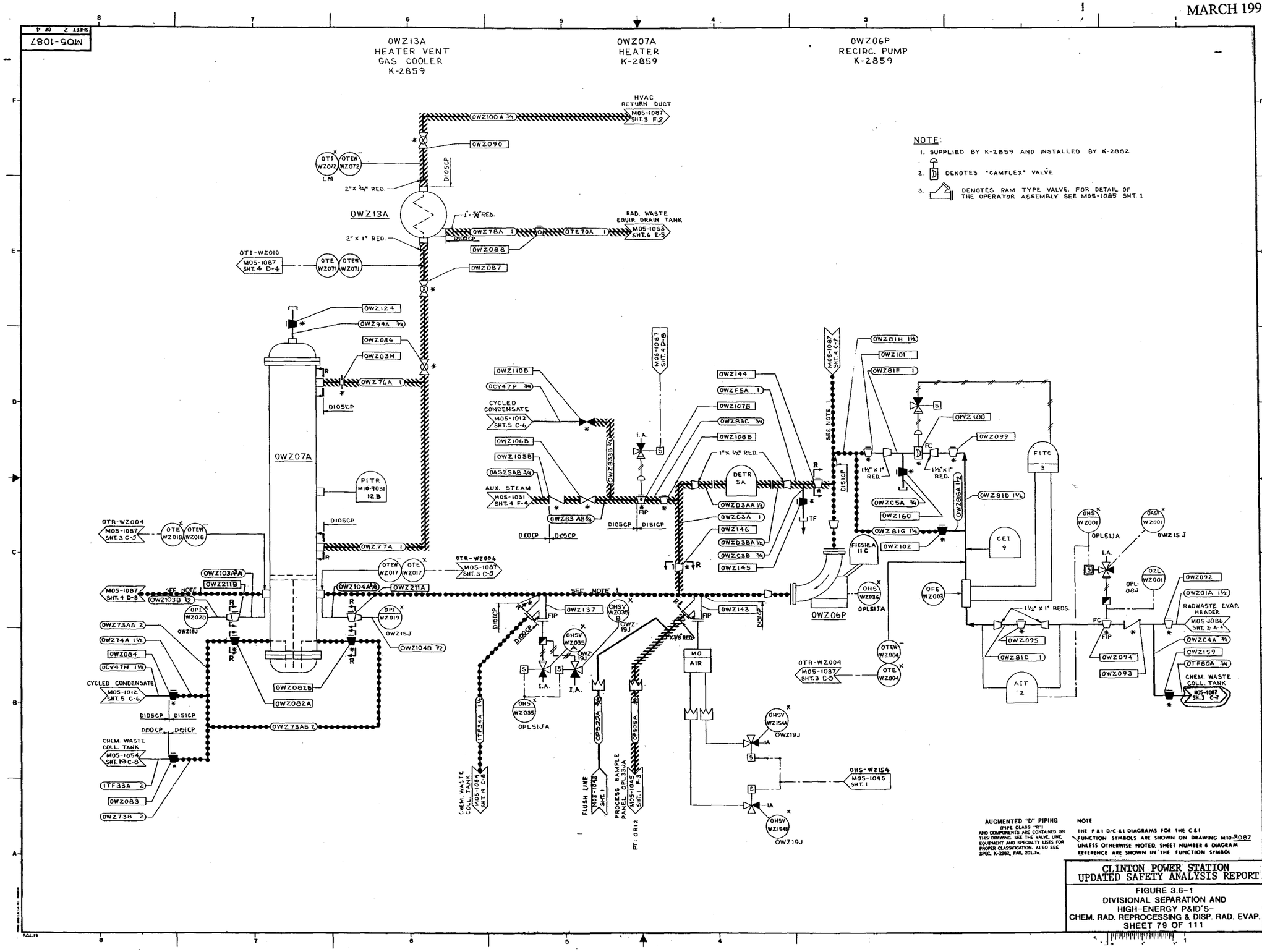
M05-1087
SHEET 2 OF 4
OWZ13A
HEATER VENT
GAS COOLER
K-2859
OWZ07A
HEATER
K-2859
OWZ06P
RECIRC. PUMP
K-2859
HVAC
RETURN DUCT
M05-1087
SHT.3 F2
OWZ100A 3/4
OWZ090
OTI WZ072
OTEW WZ072
2" x 3/4" RED.
D105CP
OWZ13A
1" x 3/4" RED.
RAD. WASTE
EQUIP. DRAIN TANK
M05-1053
SHT.6 E-5
OWZ78A 1
OTE70A 1
2" x 1" RED.
OWZ088
OTI-WZ010
M05-1087
SHT.4 D-4
OTE WZ071
OTEW WZ071
OWZ087
OWZ124
OWZ94A 3/4
OWZ086
OWZ03M
OWZ76A 1
OWZ07A
PITR
M10-9031
12B
OWZ77A 1
OTR-WZ004
M05-1087
SHT.3 C-5
OTE WZ018
OTEW WZ018
OWZ103A 3/4
OWZ211B
OWZ103B 1/2
OPI WZ020
OWZ15J
OWZ104A 3/4
OWZ211A
OPI WZ019
OWZ104B 1/2
OWZ73AA 2
OWZ74A 1 1/2
OWZ084
OCY47M 1 1/2
CYCLED CONDENSATE
M05-1012
SHT.5 C-6
OWZ082B
OWZ082A
OWZ73AB 2
CHEM. WASTE
COLL. TANK
M05-1054
SHT.19 C-8
ITF33A 2
OWZ083
OWZ73B 2
OWZ110B
OCY47P 3/4
CYCLED
CONDENSATE
M05-1012
SHT.5 C-6
OWZ106B
OWZ105B
OAS25AB 3/4
AUX. STEAM
M05-1031
SHT.4 F-4
OWZ83 AB 3/4
OWZ83BB 3/4
M05-1087
SHT.4 D-8
OWZ144
OWZF5A 1
OWZ107B
OWZ83C 3/4
OWZ108B
1" x 1/2" RED.
DETR
5A
OWZD3AA 1/2
OWZC3A 1
OWZ146
OWZD3BA 1/2
OWZC3B 3/4
OWZ145
OWZ143
OWZ137
OHSV WZ035B
OHSV WZ035A
OHS WZ035
OPL51JA
ITF34A 1 1/2
CHEM. WASTE
COLL. TANK
M05-1054
SHT.19 C-8
OPS22A 3/4
FLUSH LINE
M05-1045
SHT.1
OPS05A 3/4
PROCESS SAMPLE
PANEL OPL33JA
M05-1045
SHT.1 F-3
PT: OR12
MO
AIR
OHSV WZ154A
OWZ19J
OHS-WZ154
M05-1045
SHT.1
OHSV WZ154B
OWZ19J
M05-1087
SHT.4 C-7
SEE NOTE 1
OWZ81H 1 1/2
OWZ101
OWZ81F 1
OWZ100
OWZ099
1 1/2" x 1" RED.
OWZC5A 3/4
OWZ160
OWZ81G 1 1/2
OWZ102
OWZ81D 1 1/2
OWZ816A 1 1/2
FICSHLA
11C
OWZ06P
OHS WZ036
OPL51JA
OFE WZ003
FITC
3
CEI
9
OHS WZ001
OPL51JA
OASI WZ001
OWZ15J
OZL WZ001
OPL-08J
OWZ092
OWZ01A 1 1/2
RADWASTE EVAP.
HEADER
M05-1086
SHT.2 A-4
OWZC4A 3/4
OWZ159
OTF80A 3/4
CHEM. WASTE
COLL. TANK
M05-1087
SH.3 C-7
OWZ095
OWZ81C 1
OWZ094
OWZ093
AIT
2
OTEW WZ004
OTE WZ004
OTR-WZ004
M05-1087
SHT.3 C-5
NOTE:
1. SUPPLIED BY K-2859 AND INSTALLED BY K-2882
2. DENOTES "CAMFLEX" VALVE
3. DENOTES RAM TYPE VALVE. FOR DETAIL OF THE OPERATOR ASSEMBLY SEE M05-1085 SHT. 1
AUGMENTED "D" PIPING
(PIPE CLASS "R")
AND COMPONENTS ARE CONTAINED ON THIS DRAWING. SEE THE VALVE, LINE, EQUIPMENT AND SPECIALTY LISTS FOR PROPER CLASSIFICATION. ALSO SEE SPEC. K-2882, PAR. 201.7a.
NOTE
THE P&I D/C &I DIAGRAMS FOR THE C&I FUNCTION SYMBOLS ARE SHOWN ON DRAWING M10-R087 UNLESS OTHERWISE NOTED. SHEET NUMBER & DIAGRAM REFERENCE ARE SHOWN IN THE FUNCTION SYMBOL
CLINTON POWER STATION
UPDATED SAFETY ANALYSIS REPORT
FIGURE 3.6-1
DIVISIONAL SEPARATION AND
HIGH-ENERGY P&ID'S-
CHEM. RAD. REPROCESSING & DISP. RAD. EVAP.
SHEET 79 OF 111

M05-1087

OWZ09D ENTRAINMENT SEPARATOR K-2859

OWZ05PA DISTILLATE PUMP K-2859

OWZ17T CONDENSER DRAIN POT K-2859

OWZ10A CONDENSER K-2859

OWZ14A CONDENSER VENT GAS COOLER K-2859

OWZ05PB DISTILLATE PUMP K-2859

OWZ11A SUBCOOLER K-2859

CYCLED CONDENSATE

CHEMICAL WASTE EVAP. VAPOR BODY

SEE NOTE 2

SIGHT GLASSES

SEE NOTE 1

RADWASTE BLDG. EQUIP. DRAIN TANK

TO OTR-WZ004 M05-1087 SHT 3

TO OTI-WZ010 M05-1087-4

TO OTR-WZ004 M05-1087-3

FROM M05-1031-3, M05-1087-2, M05-1087-2, M05-1087-4, M05-1087-2, M05-1087-3 OTE-WZ026, OTE-WZ017, OTE-WZ018, OTE-WZ011, OTE-WZ004, OTE-WZ052, OTE-WZ062A

HVAC RETURN DUCT

CONCENTRATE WASTE TANK

CHEM. WASTE COLL. TANK

PROCESS SAMPLE PANEL OPL933C

EVAPORATOR MONITOR TANK

CHEM. WASTE COLLECTOR TANK

NOTES:
1. REFER TO NOTE 3 ON M05-1087 SHT. 1
2. REFER TO NOTE 1 ON M05-1087 SHT. 2

AUGMENTED "D" PIPING
(PIPE CLASS "R"; AND COMPONENTS ARE CONTAINED ON THIS DRAWING. SEE THE VALVE, LINE, EQUIPMENT AND SPECIALTY LISTS FOR PROPER CLASSIFICATION. ALSO SEE SPEC. K-2882, PAR. 201.7n.

NOTE:
THE P & I D/C & I DIAGRAMS FOR THE C & I FUNCTION SYMBOLS ARE SHOWN ON DRAWING M10-9087 UNLESS OTHERWISE NOTED. SHEET NUMBER & DIAGRAM REFERENCE ARE SHOWN IN THE FUNCTION SYMBOL.

CLINTON POWER STATION
UPDATED SAFETY ANALYSIS REPORT

FIGURE 3.6-1
DIVISIONAL SEPARATION AND HIGH-ENERGY P&ID'S-
CHEM. RAD. REPROCESSING & DISP. RAD. EVAP.
SHEET 80 OF 111

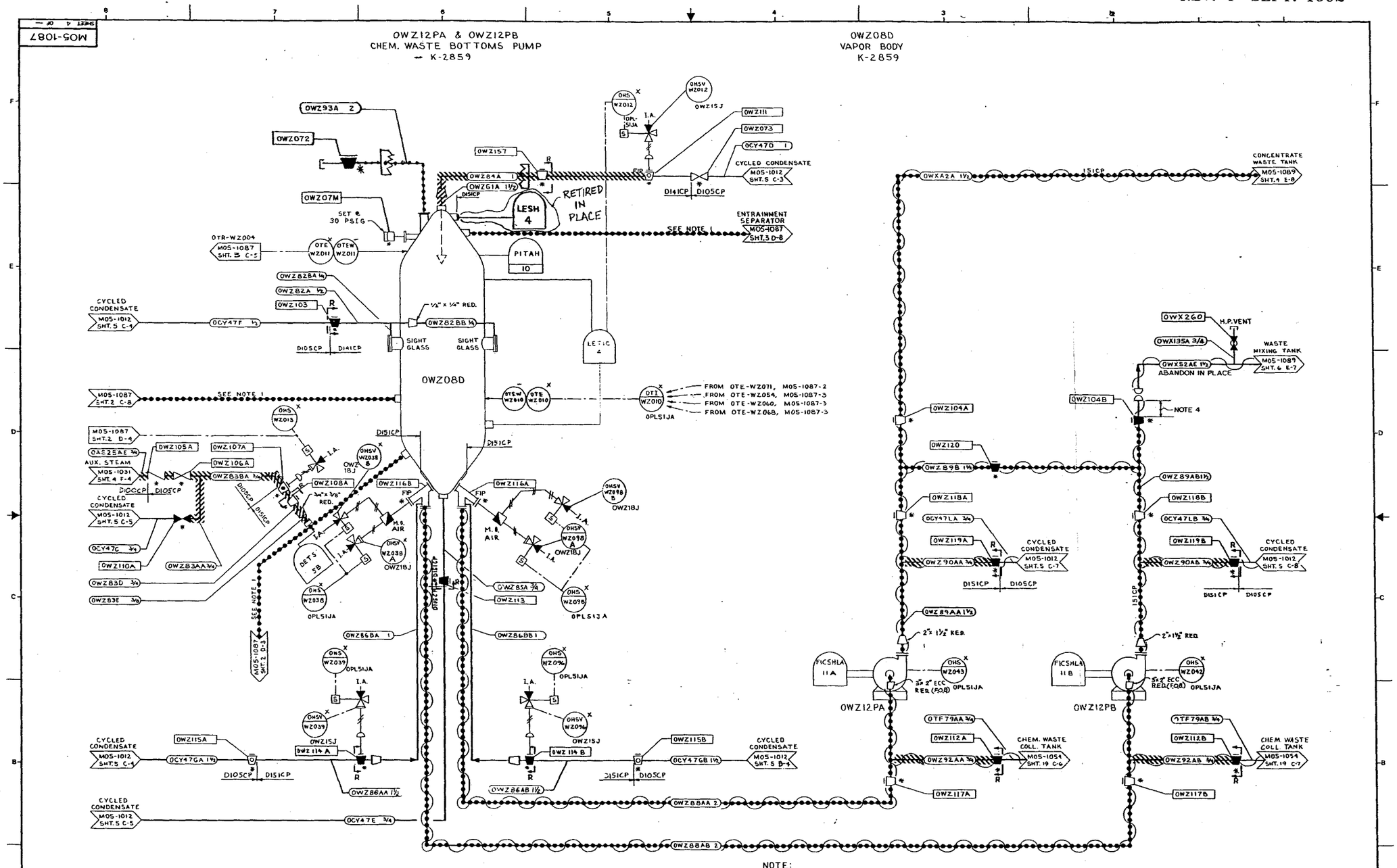

NOTE:

1. SUPPLIED BY K-2859 AND INSTALLED BY K-2882
2. DENOTES "CAMFLEX" VALVE
3. DENOTES RAM TYPE VALVE. FOR DETAIL OF THE OPERATOR ASSEMBLY SEE M05-1085 SHT. 1
4. CAPS SHOULD BE INSTALLED A MAX. OF 2 IN. FROM VALVE OR LINE.

AUGMENTED "D" PIPING (PIPE CLASS "R") AND COMPONENTS ARE CONTAINED ON THIS DRAWING. SEE THE VALVE, LINE, EQUIPMENT AND SPECIALTY LISTS FOR PROPER CLASSIFICATION. ALSO SEE SPEC. K-2882, PAR. 201.7a.

NOTE

THE P & I D/C & I DIAGRAMS FOR THE C & I FUNCTION SYMBOLS ARE SHOWN ON DRAWING M10-4097 UNLESS OTHERWISE NOTED. SHEET NUMBER & DIAGRAM REFERENCE ARE SHOWN IN THE FUNCTION SYMBOL

CLINTON POWER STATION
UPDATED SAFETY ANALYSIS REPORT

FIGURE 3.6-1
DIVISIONAL SEPARATION AND HIGH-ENERGY P&ID'S-
CHEM. RAD. REPROCESSING & DISP. RAD. EVAP.
SHEET 81 OF 111

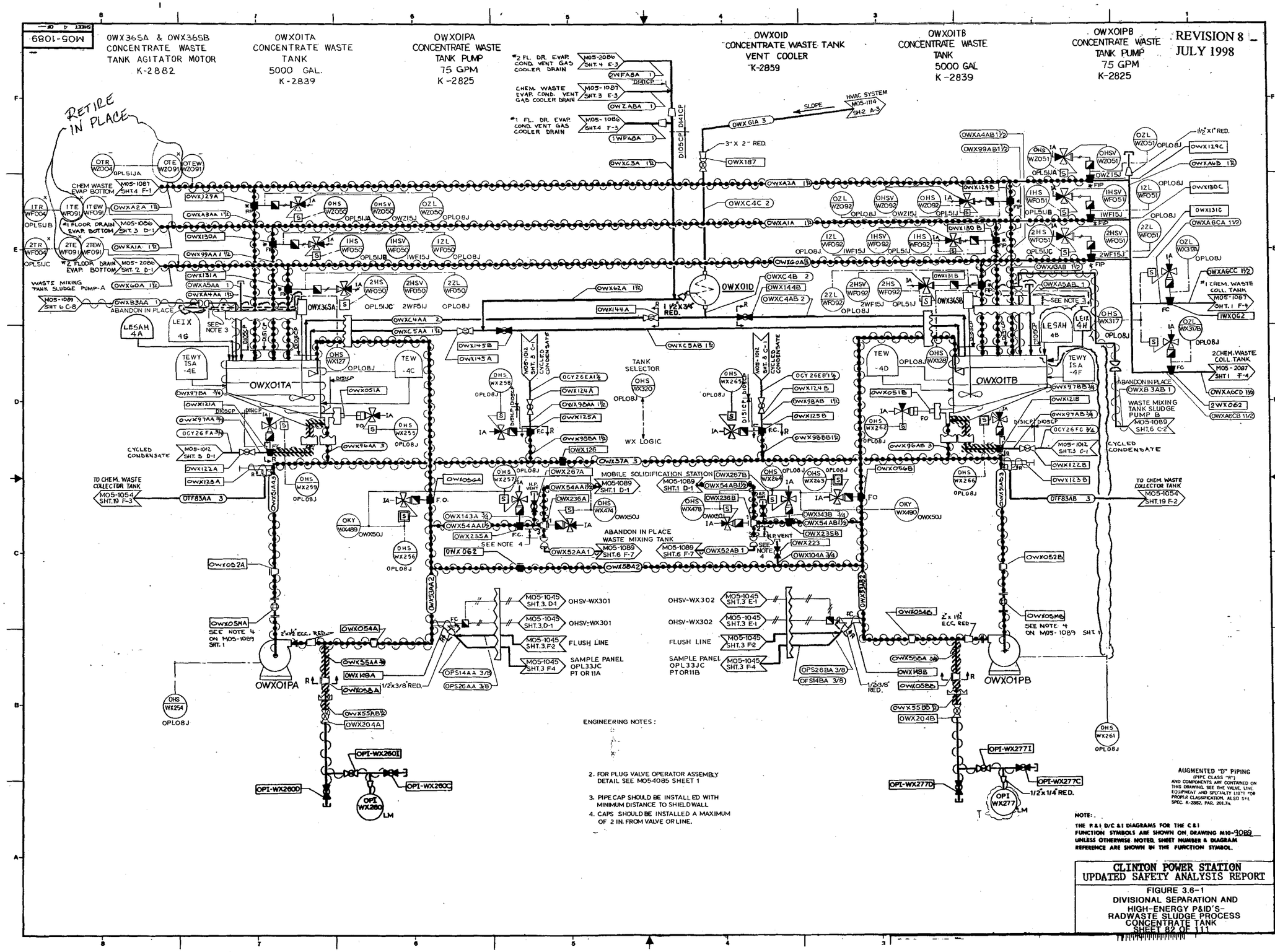

M05-1089
OWX36SA & OWX36SB CONCENTRATE WASTE TANK AGITATOR MOTOR K-2882
OWX01TA CONCENTRATE WASTE TANK 5000 GAL. K-2839
OWX01PA CONCENTRATE WASTE TANK PUMP 75 GPM K-2825
OWX01D CONCENTRATE WASTE TANK VENT COOLER K-2859
OWX01TB CONCENTRATE WASTE TANK 5000 GAL K-2839
OWX01PB CONCENTRATE WASTE TANK PUMP 75 GPM K-2825
REVISION 8
JULY 1998
RETIRE IN PLACE
OWX01TA
OWX01TB
OWX01PA
OWX01PB
OWX01D
TANK SELECTOR
WX LOGIC
MOBILE SOLIDIFICATION STATION
ABANDON IN PLACE WASTE MIXING TANK
CYCLED CONDENSATE
TO CHEM. WASTE COLLECTOR TANK
WASTE MIXING TANK SLUDGE PUMP-A
WASTE MIXING TANK SLUDGE PUMP B
FLUSH LINE
SAMPLE PANEL OPL33JC PT OR 11A
SAMPLE PANEL OPL33JC PT OR 11B
ENGINEERING NOTES:
2. FOR PLUG VALVE OPERATOR ASSEMBLY DETAIL SEE M05-1085 SHEET 1
3. PIPE CAP SHOULD BE INSTALLED WITH MINIMUM DISTANCE TO SHIELD WALL
4. CAPS SHOULD BE INSTALLED A MAXIMUM OF 2 IN. FROM VALVE OR LINE.
AUGMENTED "D" PIPING
(PIPE CLASS "R")
AND COMPONENTS ARE CONTAINED ON THIS DRAWING. SEE THE VALVE, LINE EQUIPMENT AND SPECIALTY LISTS FOR PROPER CLASSIFICATION. ALSO S+L SPEC. K-2882, PAR. 201.7n.
NOTE:
THE P&I D/C &I DIAGRAMS FOR THE C&I FUNCTION SYMBOLS ARE SHOWN ON DRAWING M10-9089 UNLESS OTHERWISE NOTED. SHEET NUMBER & DIAGRAM REFERENCE ARE SHOWN IN THE FUNCTION SYMBOL.
CLINTON POWER STATION
UPDATED SAFETY ANALYSIS REPORT
FIGURE 3.6-1
DIVISIONAL SEPARATION AND HIGH-ENERGY P&ID'S-
RADWASTE SLUDGE PROCESS
CONCENTRATE TANK
SHEET 82 OF 111