IVX06CA
DIV. 1 SWITCHGEAR
HEAT REMOVAL
CONDENSING UNIT
K-2905

IVY02S, IVY06S & IVY07S
ECCS RHR IA IB & IC
PUMP ROOM COIL CABINETS
K-2902

IE12C002A, IE12C002B & IE12C002C
RHR PUMP SEAL COOLERS
IA, IB & IC
K-2801

IVX06CB
DIV. 2 SWITCHGEAR
HEAT REMOVAL
CONDENSING UNIT
K-2905

IVY01S
ECCS LPCS PUMP ROOM
COIL CABINET
K-2902

AMENDMENT 37
MARCH 1986

IVY04S
ECCS RCIC PUMP
ROOM COIL CABINET
K-2902

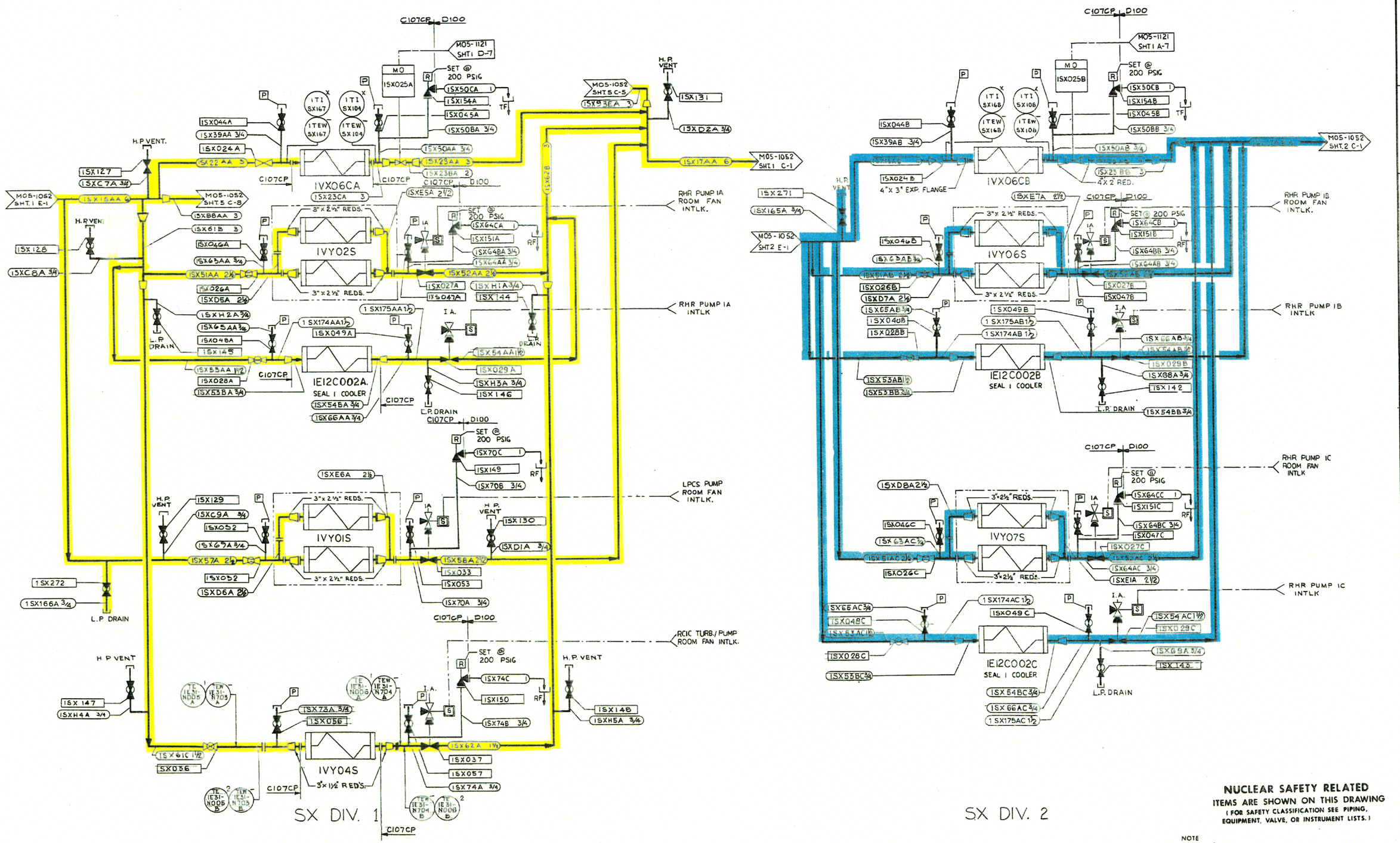

NUCLEAR SAFETY RELATED
ITEMS ARE SHOWN ON THIS DRAWING
(FOR SAFETY CLASSIFICATION SEE PIPING, EQUIPMENT, VALVE, OR INSTRUMENT LISTS.)

NOTE
THE P & I D/C & I DIAGRAMS FOR THE C & I FUNCTION SYMBOLS ARE SHOWN ON DRAWING M10-1052 UNLESS OTHERWISE NOTED. SHEET NUMBER & DIAGRAM

CLINTON POWER STATION
UPDATED SAFETY ANALYSIS REPORT

FIGURE 3.6-1
DIVISIONAL SEPARATION AND HIGH-ENERGY P&ID'S- SHUTDOWN SERVICE WATER
SHEET 50 OF 111

M05-1052

LVR09S & IVR12S
COMBUSTIBLE GAS
CONTROL SYSTEM ROOM
COOLING COIL CABINET
K-2902

REVISION 12
JANUARY 2007

OVG01SA
MANUAL DELUGE SYSTEM
SGTS CHARCOAL BED

OVC07SA
MANUAL DELUGE SYS.
HVAC SUPPLY AIR FILTER
TRAIN CHARCOAL BED

OVC09SA
MANUAL DELUGE SYS.
HVAC MAKE-UP AIR FILTER
TRAIN CHARCOAL BED

OVG01SB
MANUAL DELUGE SYSTEM
SGTS CHARCOAL BED

OVC07SB
MANUAL DELUGE SYS.
HVAC SUPPLY AIR FILTER
TRAIN CHARCOAL BED

OVC09SB
MANUAL DELUGE SYS.
HVAC MAKE-UP AIR FILTER
TRAIN CHARCOAL BED

IVR09S

IVR12S

NOTE 1. M03 FOR 2SX076A/B AND 2SX107A/B ARE ELECTRICALLY DISCONNECTED

NOTE:
RELIEF VALVES ARE FOR THERMAL RELIEF AND ARE SET AT 200 PSIG.

▲ REFERENCE M10-9105-006,-012

NUCLEAR SAFETY RELATED
ITEMS ARE SHOWN ON THIS DRAWING
(FOR SAFETY CLASSIFICATION SEE PIPING, EQUIPMENT, VALVE, OR INSTRUMENT LISTS.)

NOTE:
THE P&I D/C &I DIAGRAMS FOR THE C&I FUNCTION SYMBOLS ARE SHOWN ON DRAWING M10-9052 UNLESS OTHERWISE NOTED SHEET NUMBER & DIAGRAM REFERENCE ARE SHOWN IN THE FUNCTION SYMBOL.

CLINTON POWER STATION
UPDATED SAFETY ANALYSIS REPORT

FIGURE 3.6-1
DIVISIONAL SEPARATION AND
HIGH-ENERGY P&ID'S-
SHUTDOWN SERVICE WATER

SHEET 51 OF 111

...\USAR\rev 12\fig3-6-1-51.dgn 11/18/2005 09:27:39 AM

REV. 2 SEPT. 1990

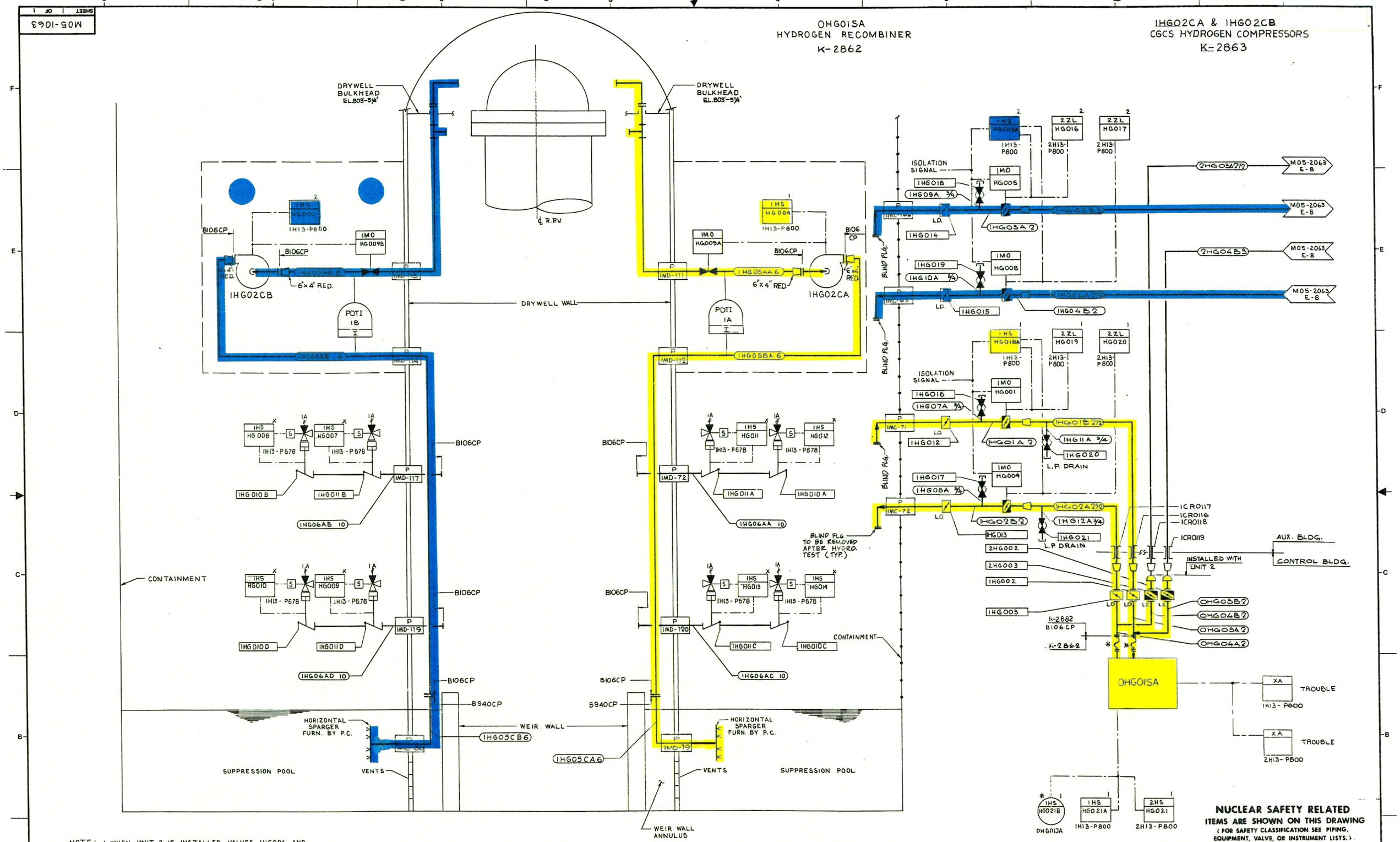

NOTE: 1. WHEN UNIT 2 IS INSTALLED, VALVES 1HG006 AND 1HG007 SHALL BE LOCKED CLOSED, AND VALVES 2HG006 AND 2HG007 SHALL BE LOCKED OPEN.

NUCLEAR SAFETY RELATED
ITEMS ARE SHOWN ON THIS DRAWING
(FOR SAFETY CLASSIFICATION SEE PIPING, EQUIPMENT, VALVE, OR INSTRUMENT LISTS.)

NOTE:
THE P&I D/C &I DIAGRAMS FOR THE C&I FUNCTION SYMBOLS ARE SHOWN ON DRAWING M10-9063 UNLESS OTHERWISE NOTED. SHEET NUMBER & DIAGRAM REFERENCE ARE SHOWN IN THE FUNCTION SYMBOL.

CLINTON POWER STATION
UPDATED SAFETY ANALYSIS REPORT

FIGURE 3.6-1
DIVISIONAL SEPARATION AND HIGH-ENERGY P&ID'S-
COMBUSTIBLE GAS CONTROL SYSTEM
SHEET 52 OF 111

RELIEF VALVE DATA

VALVE NUMBER	MAKE & TYPE	SIZE (INCHES)	VALVE SET	BLOW-DOWN (PSI)	CAPACITY (GPM)
1SM003A	DRESSER ¾-1975C	1x3/4	15 PSIG	FIXED	6
1SM003B	DRESSER ¾-1975C	1x3/4	15 PSIG	FIXED	6

GENERAL NOTES:

1. IT IS RECOMMENDED THAT THE STEAM DRYER STORAGE POOL GATE BE IN POSITION (CLOSED) DURING NORMAL PLANT OPERATION. HOWEVER, IF GATE IS OPEN, IT IS NOT A SAFETY CONCERN.
2. FOR SM LOGIC REFER TO M15-1069
3. IF THE ACTUAL DUMP TIME DURING INITIAL SYSTEM PERFORMANCE TESTING EXCEEDS 7 MIN. 50 SEC. AND FREE SURFACE VORTEX FORMATION IS VISIBLE AN ANTI-VORTEX DEVICE WILL BE REQUIRED,

ENGINEERING NOTES

1. DUMP LINES 1SM01AA 24 AND 1SM01AB 24 SHALL PENETRATE EAST AND WEST WALL AND LINER OF SHROUD/SEPARATOR STORAGE POOL, RESPECTIVELY, TO SATISFY REQUIREMENTS FOR PHYSICAL SEPARATION.
2. DUMP LINES 1SM01AA 24 AND 1SM01AB 24 SHALL PENETRATE SHROUD/SEPARATOR STORAGE POOL AT ℄ EL.816'-11".
3. DUMP LINES 1SM01BA 24 AND 1SM01BB 24 SHALL TERMINATE IMMEDIATELY BELOW LOWEST OPERATING FLOOR IN ORDER TO PROVIDE AN UNOBSTRUCTED FREE FALL TO SUPPRESSION POOL SURFACE.
4. PRESSURE RELIEF VALVES SHALL BE REMOVABLE FOR TESTING,
5. VALVES ON EACH DUMP LINE SHALL BE LOCATED AT AN ELEVATION ABOVE THE RANGE OF POSSIBLE SUPPRESSION POOL DYNAMIC EFFECTS (EL.755'0").
6. "MINIMAL DISTANCE" MEANS THAT THE PIPING DESIGNER SHOULD HOLD THE INDICATED DISTANCE TO A MINIMUM PRACTICAL LENGTH.
7. DOWNWARD RUN OF PIPING SHALL BE NEARLY VERTICAL TO ITS POINT OF TERMINATION TO ENHANCE MAXIMUM DUMP RATE.

NUCLEAR SAFETY RELATED
ITEMS ARE SHOWN ON THIS DRAWING
(FOR SAFETY CLASSIFICATION SEE PIPING, EQUIPMENT, VALVE, OR INSTRUMENT LISTS.)

NOTE:
THE P&I D/C&I DIAGRAMS FOR THE C&I FUNCTION SYMBOLS ARE SHOWN ON DRAWING M10-9069 UNLESS OTHERWISE NOTED. SHEET NUMBER & DIAGRAM REFERENCE ARE SHOWN IN THE FUNCTION SYMBOL.

CLINTON POWER STATION
UPDATED SAFETY ANALYSIS REPORT

FIGURE 3.6-1
DIVISIONAL SEPARATION AND HIGH-ENERGY P&ID'S-SUPPRESSION POOL MAKEUP
SHEET 53 OF 111

M05-1070 SHEET 1 OF —

REVISION 8
DECEMBER 1997

1E32B001A, 1E32B001E, 1E32B001J & 1E32B001N M S I V HEATERS K-2801

1E32C001 BLOWER K-2801

1E32C002B & 1E32C002F BLOWERS K-2801

NOTES:
1. CHECK VALVES SHALL BE INSTALLED IN A HORIZONTAL RUN WHICH IS AT LEAST 15-0" BELOW THE LOW PRESSURE MANIFOLD OR PIPING LOW POINT TO PERMIT DRAINAGE AT THE MANIFOLD OR PIPING AT SUB-ATMOSPHERIC PRESSURE.
2. HEATER THERMOCOUPLES SHALL BE LOCATED AT THE OUTLET END UNDER THE PIPING INSULATION AND NO GREATER THAN 12" FROM THE HEATER ELEMENTS. ANCHOR AND GUIDES SHALL BE PROVIDED ON THE HEATER SECTION OF PIPE TO LIMIT PIPE DEFLECTION TO 1/4" OR LESS.
3. THESE VALVES SHALL BE LOCATED AS CLOSE TO EACH OTHER AS POSSIBLE AND AS CLOSE AS PRACTICAL TO THE MAIN STEAM LINES.
4. DISCHARGE TO THE INLET OF SGTS TRAIN.
5. FLOW MEASURING ROTAMETER TO BE INSTALLED WITH A BLANK ORIFICE PLATE ONLY DURING SYSTEM PREOPERATIONAL AND FULL FUNCTION TESTS. REMOVE ROTAMETER, AND REPLACE BLANK ORIFICE PLATE WITH FULL PIPE I.D. SPACER FOR NORMAL OPERATION. DURING HYDROSTATIC TESTING, THE ROTAMETER SHALL BE REMOVED AND THE BLANK ORIFICE PLATE INSTALLED.
6. DILUTION AIR SHALL COME FROM A BUILDING SERVED BY THE SGTS.
7. SLOPE UPWARD FROM HEATER SECTION TO FLOW MEASURING ROTOMETERS, SLOPE DOWNWARD FROM CONNECTION TO MAIN STEAM DRAIN LINES TO HEATER SECTION AND SLOPE DOWNWARD FROM FLOW MEASURING ROTAMETERS TO LOW PRESSURE MANIFOLD (MIN. SLOPE 0.5 IN./FT.)
8. SLOPE UPWARD FROM DRAIN LINE TO BLOWER INLET HEADER. SLOPE DOWNWARD FROM CONNECTION TO MAIN STEAM LINES TO DRAIN LINE. (MIN. SLOPE 1/8 IN./FT.)
9. FOR MSIV LCS LOGIC SEE G.E. DWG. 86SE343
10. BLIND FLANGES ON DILUTION AIR INLETS AND BLOWER DISCHARGES ARE FOR START UP TESTING AND MUST BE REMOVED BEFORE OPERATION.

NUCLEAR SAFETY RELATED
ITEMS ARE SHOWN ON THIS DRAWING
(FOR SAFETY CLASSIFICATION SEE PIPING, EQUIPMENT, VALVE, OR INSTRUMENT LISTS.)

NOTE:
THE P & I D/C & I DIAGRAMS FOR THE C & I FUNCTION SYMBOLS ARE SHOWN ON DRAWING M10-9070 UNLESS OTHERWISE NOTED. SHEET NUMBER & DIAGRAM REFERENCE ARE SHOWN IN THE FUNCTION SYMBOL.

CLINTON POWER STATION
UPDATED SAFETY ANALYSIS REPORT

FIGURE 3.6-1
DIVISIONAL SEPARATION AND HIGH-ENERGY P&ID'S-
MSIV LEAKAGE CONTROL SYSTEM
SHEET 54 OF 111

REVISION 7
JANUARY 1997

MO5-1071

1B13D003
REACTOR PRESSURE VESSEL
K-2801

1B13D003

NOTES:
1. ALL DIVISION 1 "LY" & "PY" LOCATED ON PANEL 1H13-P661 UNLESS OTHERWISE NOTED.
2. ALL DIVISION 3 "LY" & "PY" LOCATED ON PANEL 1H13-P663 UNLESS OTHERWISE NOTED.
3. N11 IS THE BELOW CORE PLATE PRESSURE TAP
~~N18 IS THE ABOVE CORE PLATE PRESSURE TAP~~

NUCLEAR SAFETY RELATED
ITEMS ARE SHOWN ON THIS DRAWING
(FOR SAFETY CLASSIFICATION SEE PIPING, EQUIPMENT, VALVE, OR INSTRUMENT LISTS.)

NOTES (CONT'D)
4. LOCK OPEN TO PREVENT PRESSURIZATION BY THE KEEP-FILL SYSTEM (MOD. NB-031, NRC I.N. 93-89)

CLINTON POWER STATION
UPDATED SAFETY ANALYSIS REPORT

FIGURE 3.6-1
DIVISIONAL SEPARATION AND HIGH-ENERGY P&ID'S-
NUCLEAR BOILER
SHEET 55 OF 111