P&ID Color Coding Key for Piping Energy and Physical Separation Designation			
Physical Separation Division	Color	Energy Category	P&ID Designation
X (Non-Divisional)	Black	High PWA High NPWA * Moderate	●●●●●● ////// ------
I	Yellow	High PWA High NPWA * Moderate	●●●●●● ////// ------
II	Blue	High PWA High NPWA * Moderate	●●●●●● ////// ------
III	Green	High PWA High NPWA * Moderate	●●●●●● ////// ------

NOTES:

The drawings in Figure 3.6-1 should not be used for detailed information and are not updated unless a change affects divisional separation or high-energy lines. Detail information should be taken from P&IDs in the controlled drawing program.

“High PWA” – those lines which are considered to be high energy (refer to subsection 3.6.1.1.1.b) and therefore subject to pipe rupture analysis.

“High NPWA” – those lines which are considered to be moderate energy and not subject to pipe rupture analysis. Those lines fall under the definition in subsection 3.6.2.1.4. These lines operate within the pressure and temperature conditions specified for high energy for short operational periods, or they are high energy but exempted under the size criteria (less than or equal to 1” nominal pipe size).

“Moderate” – those lines which are considered to be moderate energy (refer to subsection 3.6.1.1.1.c).

* There is no differentiation between moderate energy and low energy.

NOTE:

The drawings in Figure 3.6-1 should not be used for detailed information and are not updated unless a change affects divisional separation or high-energy lines. Detail information should be taken from P&IDs in the controlled drawing program.

INDEX OF SYSTEMS

Sheet Number(s)	System
5 to 10	Main Steam
11 to 13	Extraction Steam
14	Reactor Feedwater
15	Condensate
16	Condensate Booster
17 to 21	Feedwater Heater Drains – Turbine Cycle
22 & 23	Feedwater Heater Miscellaneous Vents and Drains
24 to 27	Turbine-Generator Miscellaneous Vents and Drains
28 & 29	Turbine Gland Steam Seal System
30 to 33	Auxiliary Steam
34 to 38	Component Cooling Water
39 to 41	Containment Monitoring System
42 & 43	Diesel Generator Fuel Oil System
44 to 46	Fuel Pool Cooling and Cleanup
47 to 51	Shutdown Service Water
52	Combustible Gas Control System
53	Suppression Pool Makeup
54	MSIV Leakage Control System
55 & 56	Nuclear Boiler
57 to 59	Reactor Recirculation
60	Low Pressure Core Spray
61	High Pressure Core Spray
62 to 65	Residual Heat Removal
66 to 69	Reactor Water Cleanup

NOTE:

The drawings in Figure 3.6-1 should not be used for detailed information and are not updated unless a change affects divisional separation or high-energy lines. Detail information should be taken from P&IDs in the controlled drawing program.

INDEX OF SYSTEMS

Sheet Number(s)	System
70	Standby Liquid Control
71	Control Rod Drive
72 & 73	Reactor Core Isolation Cooling
74 to 76	Off Gas
77 & 78	Floor Drain Readwaste Process
79 to 81	Chemical Radwaste Reprocessing and Disposal Radwaste Evaporator
82 & 83	Radwaste Sludge Process Concentrate Tank
84 to 90	Control Room HVAC
90A	Laboratory HVAC System
91	Diesel Generator Room Ventilation
92	Fuel Building HVAC
93 & 94	Standby Gas Treatment System
95	Shutdown Service Water System
96 & 97	Drywell Cooling Chilled Water System
98	Drywell Purge
99	Containment Building HVAC
100 to 102	Essential Switchgear Heat Removal
103 & 104	ECCS Equipment Room Cooling
105 & 106	Refrigeration Piping Switchgear Heat Removal
107	Combustible Gas Control System
108 & 109	Radwaste Floor Drain Process
110 & 111	Control Rod Drive System

CLINTON POWER STATION
UPDATED SAFETY ANALYSIS REPORT

Figure 3.6-1
Sheet 3 of 111

DIVISIONAL SEPARATION AND
HIGH ENERGY P&IDs
INDEX OF SYSTEMS

Figure 3.6-1 Sheet 4 of 111 has been deleted

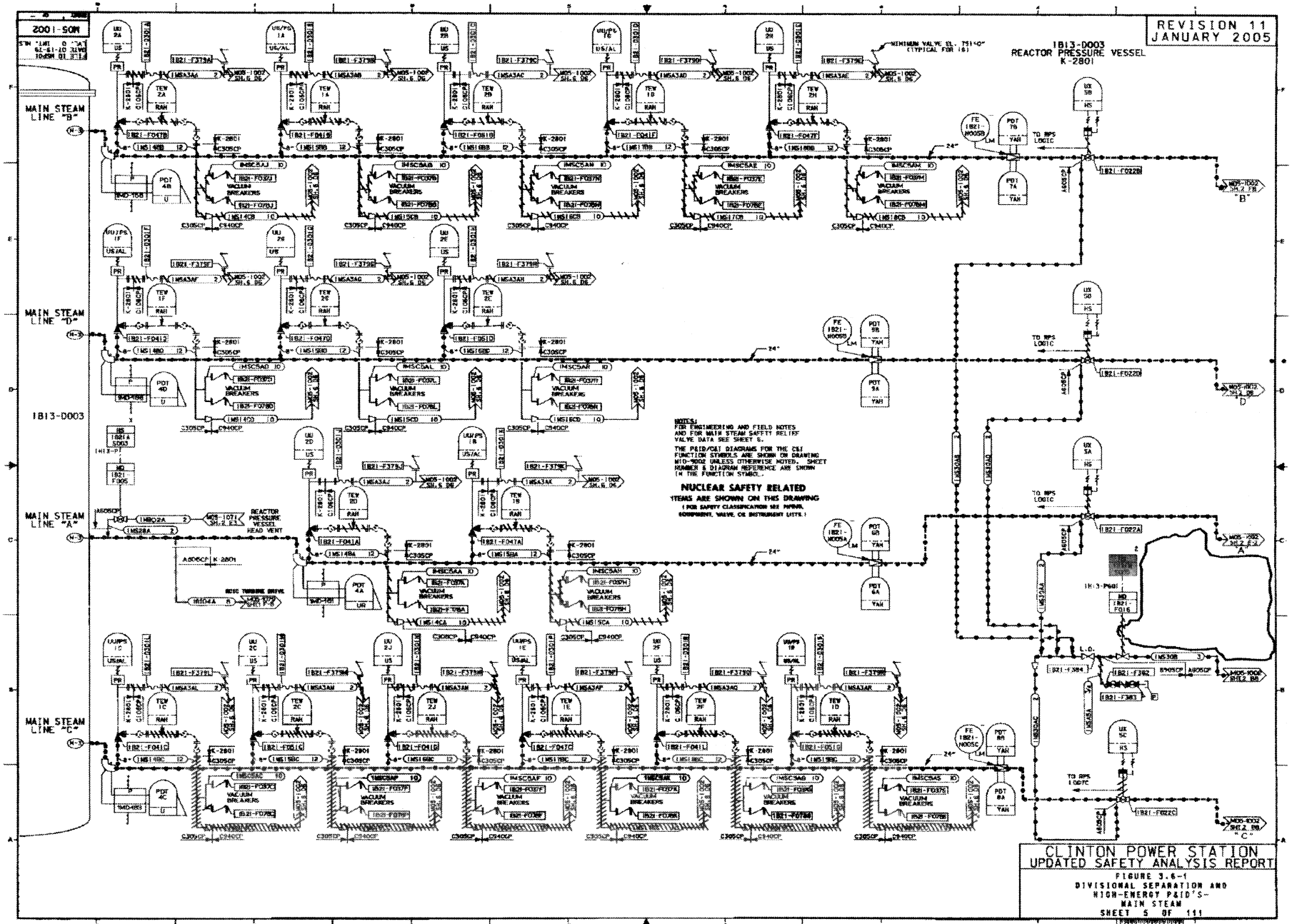
REVISION 11
JANUARY 2005
1B13-D003
REACTOR PRESSURE VESSEL
K-2801
MAIN STEAM LINE "B"
MAIN STEAM LINE "D"
MAIN STEAM LINE "A"
MAIN STEAM LINE "C"
1B13-D003
NUCLEAR SAFETY RELATED
ITEMS ARE SHOWN ON THIS DRAWING
VACUUM BREAKERS
REACTOR PRESSURE VESSEL HEAD VENT
TO RPS LOGIC
CLINTON POWER STATION
UPDATED SAFETY ANALYSIS REPORT
FIGURE 3.6-1
DIVISIONAL SEPARATION AND
HIGH-ENERGY P&ID'S-
MAIN STEAM
SHEET 5 OF 111

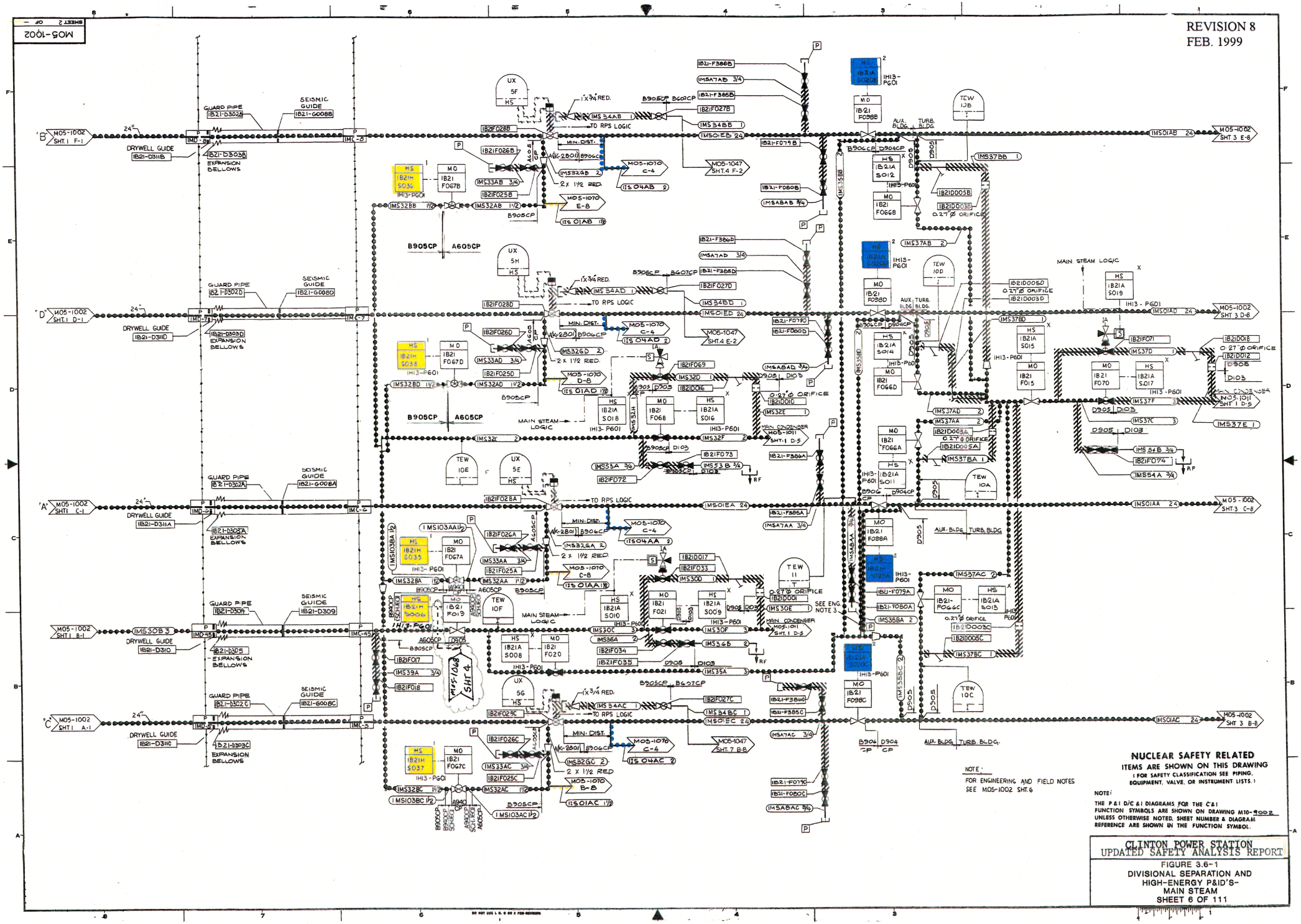
REVISION 8
FEB. 1999
M05-1002
SHEET 2 OF —
'B' M05-1002 SHT. 1 F-1
'D' M05-1002 SHT. 1 D-1
'A' M05-1002 SHT 1 C-1
M05-1002 SHT 1 B-1
'C' M05-1002 SHT 1 A-1
M05-1002 SHT 3 E-8
M05-1002 SHT 3 D-8
M05-1002 SHT 3 C-8
M05-1002 SHT 3 B-8
GUARD PIPE
SEISMIC GUIDE
DRYWELL GUIDE
EXPANSION BELLOWS
TO RPS LOGIC
MIN. DIST.
MAIN STEAM LOGIC
MAIN CONDENSER
AUX. BLDG. TURB. BLDG.
SEE ENG. NOTE 3
B905CP A605CP
M05-1047 SHT. 4 E-2
M05-1047 SHT. 7 B-8
M05-1070 C-4
M05-1070 D-8
M05-1070 B-8
M05-1011 SHT. 1 D-5
M05-1068 SHT 4
NOTE:
FOR ENGINEERING AND FIELD NOTES SEE M05-1002 SHT. 6
NUCLEAR SAFETY RELATED
ITEMS ARE SHOWN ON THIS DRAWING
(FOR SAFETY CLASSIFICATION SEE PIPING, EQUIPMENT, VALVE, OR INSTRUMENT LISTS.)
NOTE:
THE P&I D/C &I DIAGRAMS FOR THE C&I FUNCTION SYMBOLS ARE SHOWN ON DRAWING M10-9002 UNLESS OTHERWISE NOTED. SHEET NUMBER & DIAGRAM REFERENCE ARE SHOWN IN THE FUNCTION SYMBOL.
CLINTON POWER STATION
UPDATED SAFETY ANALYSIS REPORT
FIGURE 3.6-1
DIVISIONAL SEPARATION AND
HIGH-ENERGY P&ID'S-
MAIN STEAM
SHEET 6 OF 111

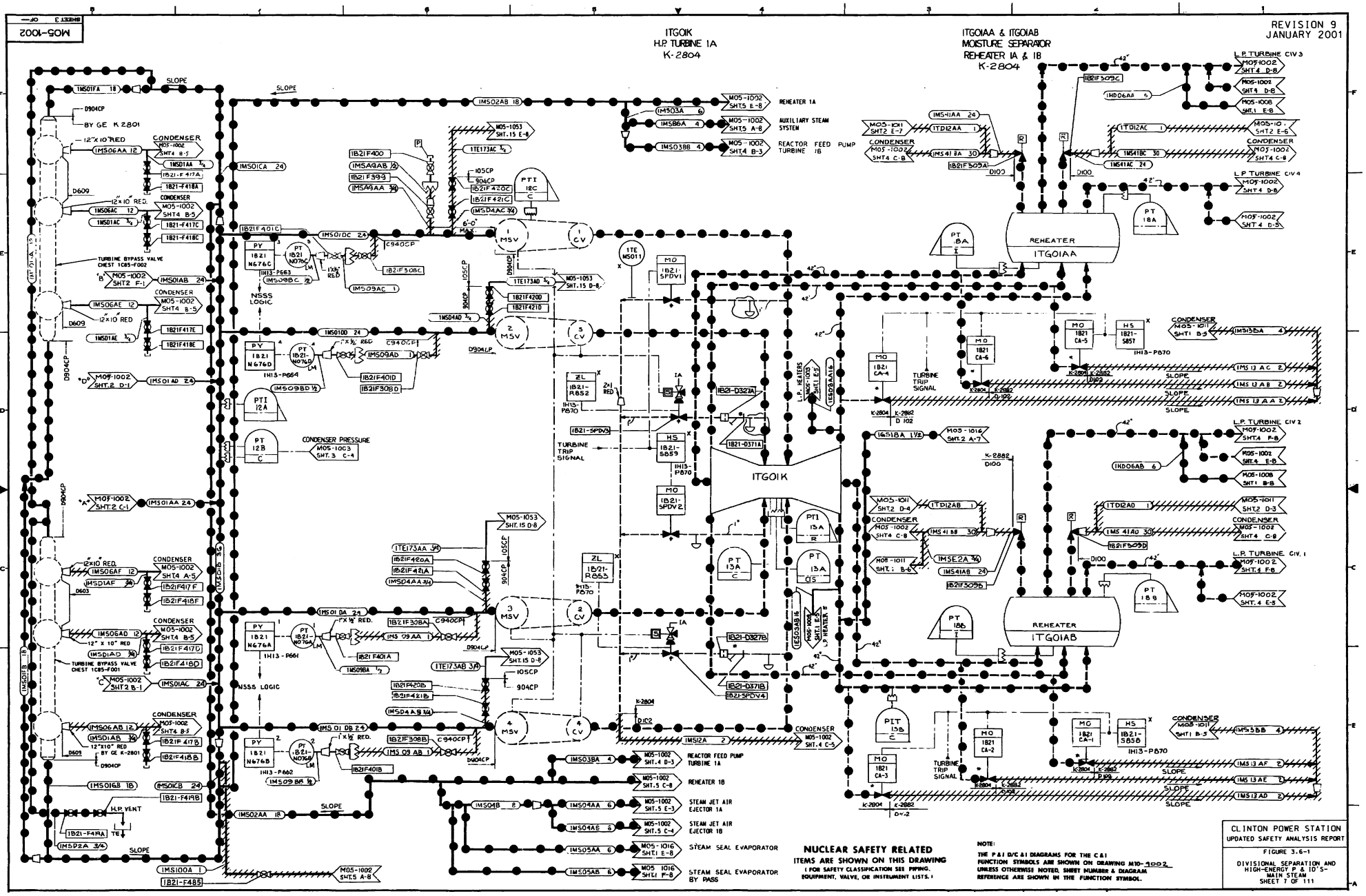
M05-1002
REVISION 9
JANUARY 2001
ITG01K
H.P. TURBINE 1A
K-2804
ITG01AA & ITG01AB
MOISTURE SEPARATOR
REHEATER 1A & 1B
K-2804
REHEATER 1A
AUXILIARY STEAM SYSTEM
REACTOR FEED PUMP TURBINE 1B
CONDENSER
TURBINE BYPASS VALVE CHEST 1C85-F002
TURBINE BYPASS VALVE CHEST 1C85-F001
BY GE K-2801
NSSS LOGIC
CONDENSER PRESSURE
TURBINE TRIP SIGNAL
L.P. HEATERS
REHEATER
ITG01AA
ITG01AB
ITG01K
L.P. TURBINE CIV 3
L.P. TURBINE CIV 4
L.P. TURBINE CIV 2
L.P. TURBINE CIV. 1
H.P. VENT
REACTOR FEED PUMP TURBINE 1A
REHEATER 1B
STEAM JET AIR EJECTOR 1A
STEAM JET AIR EJECTOR 1B
STEAM SEAL EVAPORATOR
STEAM SEAL EVAPORATOR BY PASS
NUCLEAR SAFETY RELATED
ITEMS ARE SHOWN ON THIS DRAWING
(FOR SAFETY CLASSIFICATION SEE PIPING, EQUIPMENT, VALVE, OR INSTRUMENT LISTS.)
NOTE:
THE P&I D/C &I DIAGRAMS FOR THE C&I FUNCTION SYMBOLS ARE SHOWN ON DRAWING M10-1002 UNLESS OTHERWISE NOTED. SHEET NUMBER & DIAGRAM REFERENCE ARE SHOWN IN THE FUNCTION SYMBOL.
CLINTON POWER STATION
UPDATED SAFETY ANALYSIS REPORT
FIGURE 3.6-1
DIVISIONAL SEPARATION AND HIGH-ENERGY P & ID'S- MAIN STEAM
SHEET 7 OF 111

30" x 42" 2D at 1"=1"

REVISION 11
JANUARY 2005

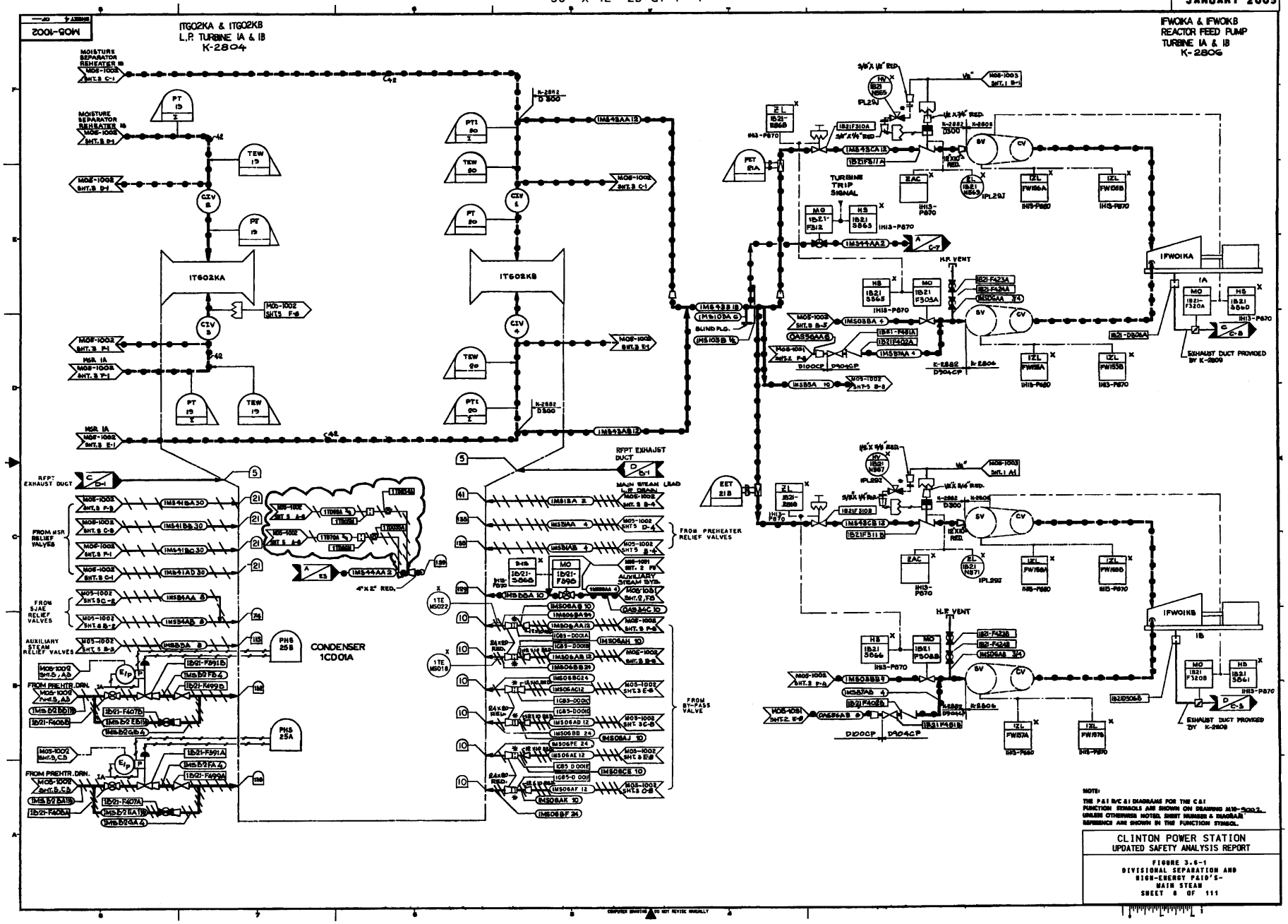

REVISION 12
JANUARY 2007

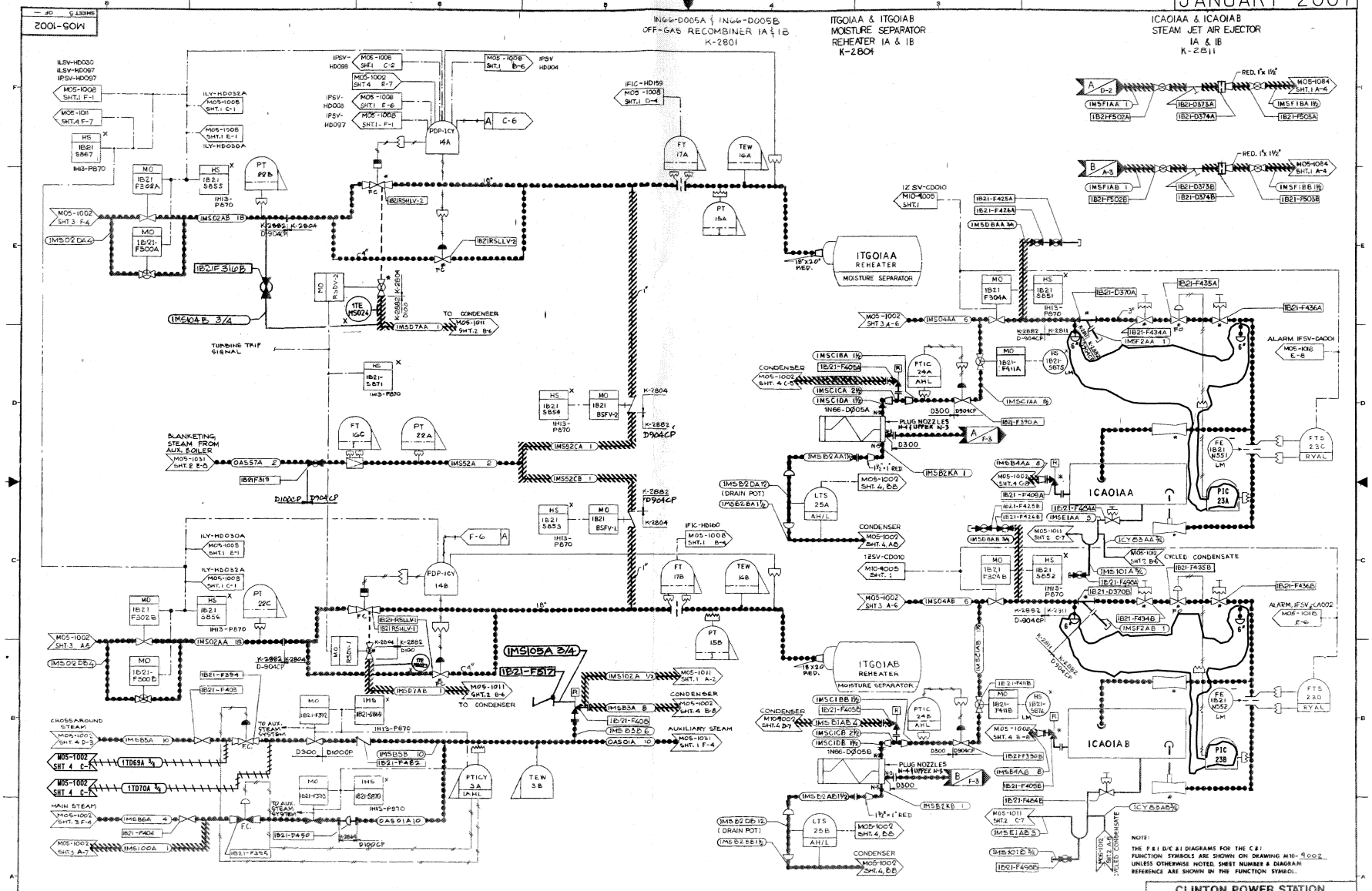

NOTES

1. VALVES 1B21F437A AND 1B21F437B HAVE BEEN GAGGED CLOSED

CLINTON POWER STATION
FINAL SAFETY ANALYSIS REPORT

FIGURE 3.6-1
DIVISIONAL SEPARATION AND
HIGH-ENERGY P&ID'S-
MAIN STEAM
SHEET 9 OF 111

M05-1002 SHEET 6 OF 6

TABLE I (SEE ENGINEERING NOTE 4)

SAFETY RELIEF VALVE NUMBERS		1B21F041A	1B21F041B	1B21F041C	1B21F041D	1B21F041F	1B21F041G	1B21F041L	1B21F047A	1B21F047B	1B21F047C	1B21F047D	1B21F047F	1B21F051B	1B21F051C	1B21F051D	1B21F051G
ADS OR NON-ADS FUNCTION		NON-ADS	ADS	ADS	ADS	ADS	NON-ADS	NON-ADS	ADS	NON-ADS	ADS	NON-ADS	NON-ADS	NON-ADS	NON-ADS	NON-ADS	ADS
VENT LINE NUMBER		IMSA3BJ	IMSA3BB	IMSA3BL	IMSA3BF	IMSA3BD	IMSA3BN	IMSA3BQ	IMSA3BK	IMSA3BA	IMSA3BP	IMSA3BG	IMSA3BE	IMSA3BC	IMSA3BM	IMSA3BH	IMSA3BR
DISCHARGE LINE NUMBER		IMS14CA	IMS15CB	IMS14CC	IMS14CD	IMS17CB	IMS16CC	IMS18CC	IMS15CA	IMS14CB	IMS17CC	IMS15CD	IMS18CB	IMS16CB	IMS15CC	IMS16CD	IMS19CC
DISCHARGE DEVICE EQUIPMENT NUMBER SPECIFICATION K-2801		1T23G024A	1T23G024B	1T23G024C	1T23G024D	1T23G024E	1T23G024F	1T23G024G	1T23G024H	1T23G024J	1T23G024K	1T23G024L	1T23G024M	1T23G024N	1T23G024P	1T23G024R	1T23G024S
DRYWELL PENETRATION NUMBER		IMD-19	IMD-27	IMD-25	IMD-31	IMD-29	IMD-23	IMD-21	IMD-18	IMD-26	IMD-22	IMD-32	IMD-30	IMD-28	IMD-24	IMD-33	IMD-20
RELIEF VALVE SET (PSIG)	RELIEF	1123	1123	1123	1123	1123	1123	1123	1113	1113	1113	1113	1113	1113	1113	1103	1113
	SPRING	1165	1165	1165	1165	1165	1165	1165	1180	1180	1180	1180	1180	1190	1190	1190	1190

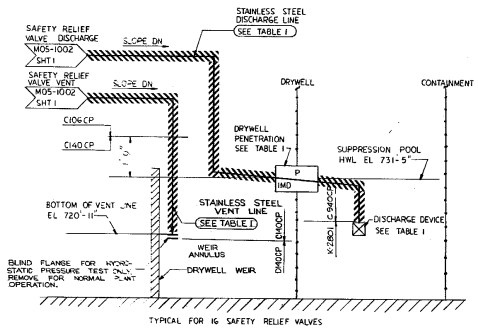

FIELD NOTES :

1. FOR NUCLEAR BOILER SYSTEM (NB) LOGIC SEE G.E DRAWING 828E151
2. FOR REACTOR PROTECTION SYSTEM (RPS) LOGIC SEE G.E. DRAWING 828E317

ENGINEERING NOTES :

1. ALL MAIN STEAM DRAIN LINES AND SAFETY RELIEF VALVES DISCHARGE AND VENT LINES SHALL SLOPE IN DIRECTION OF FLOW 1/8 INCH PER FT MINIMUM.
2. BY-PASS LINES IMS35BA, IMS35BB, IMS35BC AND IMS35BD SHALL BE CONNECTED TO THE TOPS OF THE MAIN STEAM LINES.
3. VALVES 1B21F027A, 1B21F027B, 1B21F027, AND 1B21F027D SHALL BE LOCATED OUTSIDE OF SHIELDING WALLS AND BE ACCESSIBLE DURING NORMAL PLANT OPERATION.
4. ALL MAIN STEAM SAFETY RELIEF VALVES ARE MANUFACTURED BY "DIKKERS AND FURNISHED UNDER SPECIFICATION K-2801 SIZE: 8" X 10" WITH RATED DISCHARGE OF 925,000 LBS PER HOUR AT AN INLET PRESSURE OF 103 PERCENT OF 1205 PSIG.

MISC. RELIEF VALVE TABULATION

LOCATION	VALVE NUMBER	SIZE (INCHES)	CAPACITY (LB/HR)	SET PRESS (PSIG)	MODEL NUMBER	FURNISHED BY
STEAM JET AIR EJECTOR 1A	1B21-F409A	4 X 6	120,000	330	JO-35-A	K-2811
STEAM JET AIR EJECTOR 1B	1B21-F409B	4 X 6	120,000	330	JO-35-A	K-2811
PREHEATER STEAM INLET 1A	1B21-F405A	2½ x 4	26,206	350	2½-1910-3037/P1	-2869
PREHEATER STEAM INLET 1B	1B21-F405B	2½ x 4	26,206	350	2½-1910-3037/P1	K-2869
AUX. STEAM HEADER	1B21-F408	6 x 8	124,069	125	6-1905-3078/P1	K-2869
MSR 1A	1B21-F309A	20 x 24	2.65×10^6	272	N/A	K-2804
MSR 1B	1B21-F309B	18 x 24	2.09×10^6	265	N/A	K-2804
MSR 1A	1B21-F309C	18 x 24	2.04×10^6	258	N/A	K-2804
MSR 1B	1B21-F309D	20 x 24	2.66×10^6	275	N/A	K-2804

NUCLEAR SAFETY RELATED
ITEMS ARE SHOWN ON THIS DRAWING
(FOR SAFETY CLASSIFICATION SEE PIPING, EQUIPMENT, VALVE, OR INSTRUMENT LISTS)

NOTE:
THE P&I D/C&I DIAGRAMS FOR THE C&I FUNCTION SYMBOLS ARE SHOWN ON DRAWING M10-9002 UNLESS OTHERWISE NOTED, SHEET NUMBER & DIAGRAM

CLINTON POWER STATION
UPDATED SAFETY ANALYSIS REPORT

FIGURE 3.6-1
DIVISIONAL SEPARATION AND
HIGH-ENERGY P&ID'S-
MAIN STEAM
SHEET 10 OF 111

REV. 2 SEPT. 1990

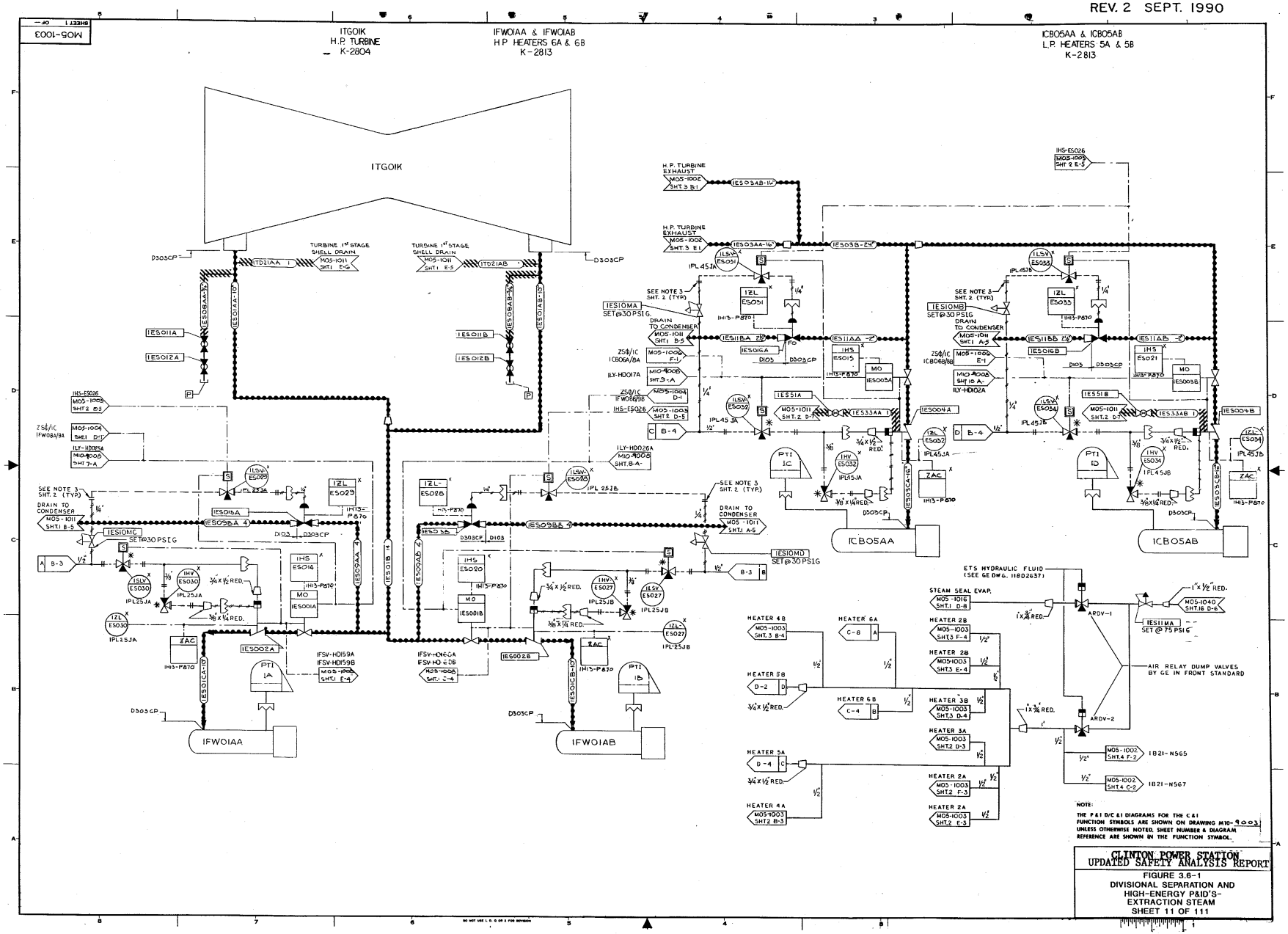

CLINTON POWER STATION
UPDATED SAFETY ANALYSIS REPORT

FIGURE 3.6-1
DIVISIONAL SEPARATION AND
HIGH-ENERGY P&ID'S-
EXTRACTION STEAM
SHEET 11 OF 111

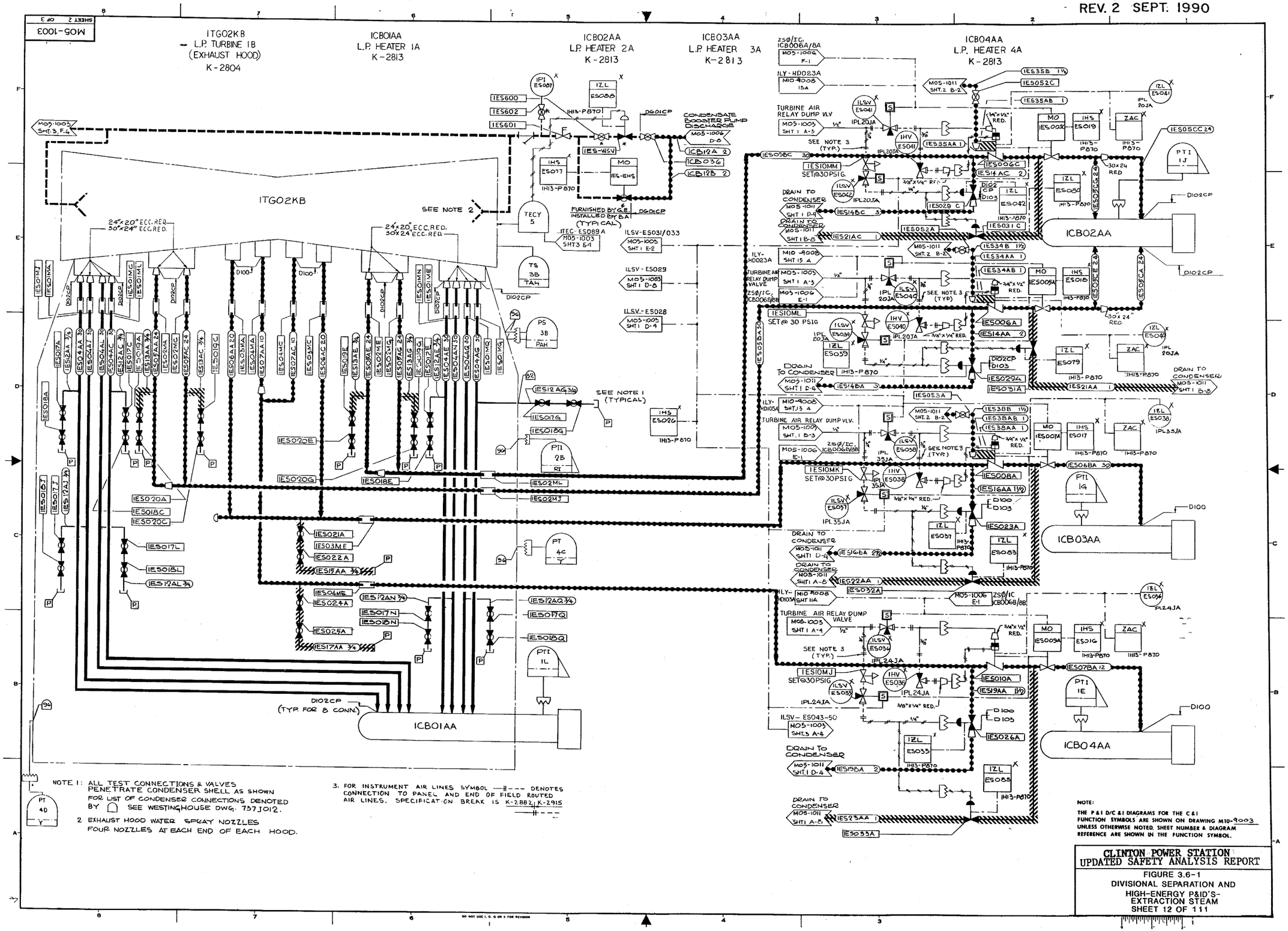

CLINTON POWER STATION
UPDATED SAFETY ANALYSIS REPORT

FIGURE 3.6-1
DIVISIONAL SEPARATION AND
HIGH-ENERGY P&ID'S-
EXTRACTION STEAM
SHEET 12 OF 111

REV. 2 SEPT. 1990

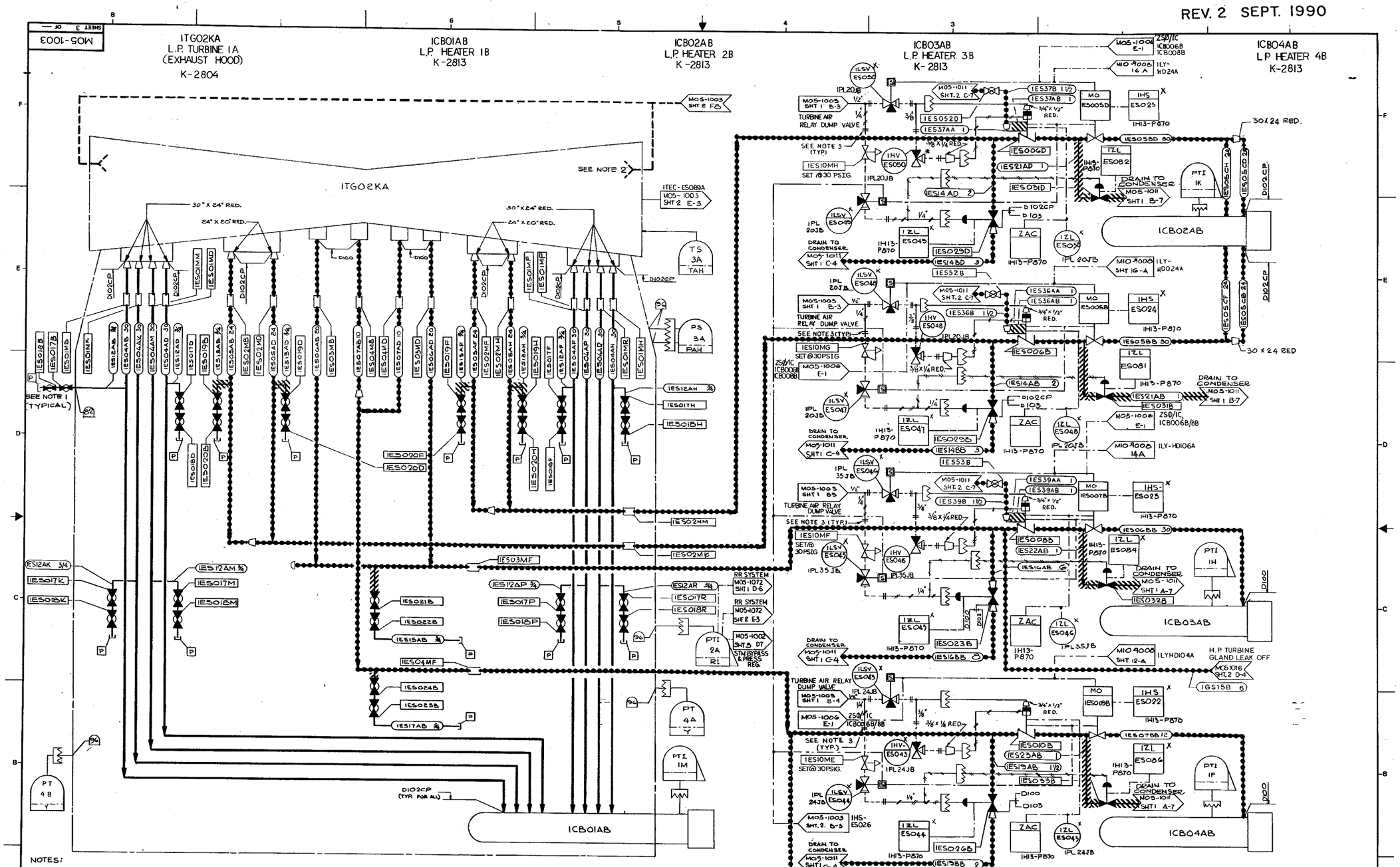

NOTES:

1. ALL TEST CONNECTIONS & VALVES PENETRATE CONDENSER SHELLS AS SHOWN.
   FOR LIST OF CONDENSER CONNECTIONS NOTED BY ⬡ SEE WESTINGHOUSE DWG. 737J012.
2. EXHAUST HOOD WATER SPRAY NOZZLES. FOUR NOZZLES AT EACH END OF EACH HOOD.
3. FOR INSTRUMENT AIR LINES —‖— — — DENOTES CONNECTION TO PANEL AND END OF FIELD ROUTED AIR LINES. SPECIFICATION BREAK IS K-2882, K-2915 —‖— — — —

NOTE

THE P&I D/C&I DIAGRAMS FOR THE C&I FUNCTION SYMBOLS ARE SHOWN ON DRAWING M10-9003 UNLESS OTHERWISE NOTED. SHEET NUMBER & DIAGRAM

CLINTON POWER STATION
UPDATED SAFETY ANALYSIS REPORT

FIGURE 3.6-1
DIVISIONAL SEPARATION AND HIGH-ENERGY P&ID'S-
EXTRACTION STEAM
SHEET 13 OF 111

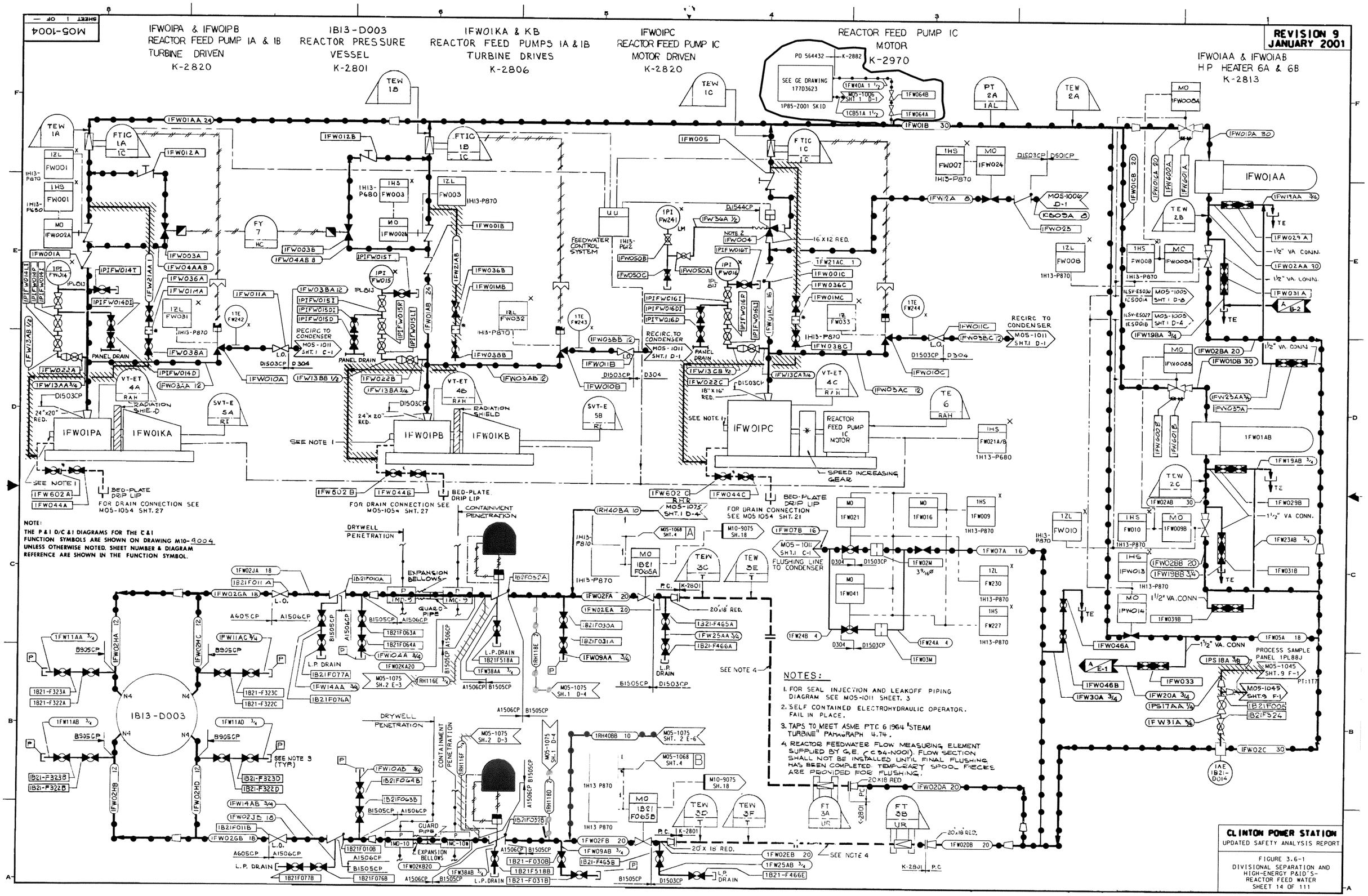
M05-1004
SHEET 1 OF
REVISION 9
JANUARY 2001
1FW01PA & 1FW01PB
REACTOR FEED PUMP 1A & 1B
TURBINE DRIVEN
K-2820
1B13-D003
REACTOR PRESSURE
VESSEL
K-2801
1FW01KA & KB
REACTOR FEED PUMPS 1A & 1B
TURBINE DRIVES
K-2806
1FW01PC
REACTOR FEED PUMP 1C
MOTOR DRIVEN
K-2820
REACTOR FEED PUMP 1C
MOTOR
K-2970
1FW01AA & 1FW01AB
HP HEATER 6A & 6B
K-2813
1FW01PA
1FW01KA
1FW01PB
1FW01KB
1FW01PC
REACTOR FEED PUMP 1C MOTOR
1FW01AA
1FW01AB
1B13-D003
FEEDWATER CONTROL SYSTEM
RECIRC. TO CONDENSER
PANEL DRAIN
RADIATION SHIELD
SEE NOTE 1
SEE NOTE 3 (TYP)
SEE NOTE 4
BED-PLATE DRIP LIP
FOR DRAIN CONNECTION SEE M05-1054 SHT. 27
FOR DRAIN CONNECTION SEE M05 1054 SHT. 21
CONTAINMENT PENETRATION
DRYWELL PENETRATION
EXPANSION BELLOWS
GUARD PIPE
SPEED INCREASING GEAR
FLUSHING LINE TO CONDENSER
PROCESS SAMPLE PANEL 1PL88J
NOTES:
1. FOR SEAL INJECTION AND LEAKOFF PIPING DIAGRAM SEE M05-1011 SHEET. 3
2. SELF CONTAINED ELECTROHYDRAULIC OPERATOR. FAIL IN PLACE.
3. TAPS TO MEET ASME PTC 6 1964 "STEAM TURBINE" PARAGRAPH 4.74.
4. REACTOR FEEDWATER FLOW MEASURING ELEMENT SUPPLIED BY G.E. (C34-N001). FLOW SECTION SHALL NOT BE INSTALLED UNTIL FINAL FLUSHING HAS BEEN COMPLETED. TEMPORARY SPOOL PIECES ARE PROVIDED FOR FLUSHING.
NOTE:
THE P&I D/C&I DIAGRAMS FOR THE C&I FUNCTION SYMBOLS ARE SHOWN ON DRAWING M10-9004 UNLESS OTHERWISE NOTED. SHEET NUMBER & DIAGRAM REFERENCE ARE SHOWN IN THE FUNCTION SYMBOL.
CLINTON POWER STATION
UPDATED SAFETY ANALYSIS REPORT
FIGURE 3.6-1
DIVISIONAL SEPARATION AND HIGH-ENERGY P&ID'S-
REACTOR FEED WATER
SHEET 14 OF 111

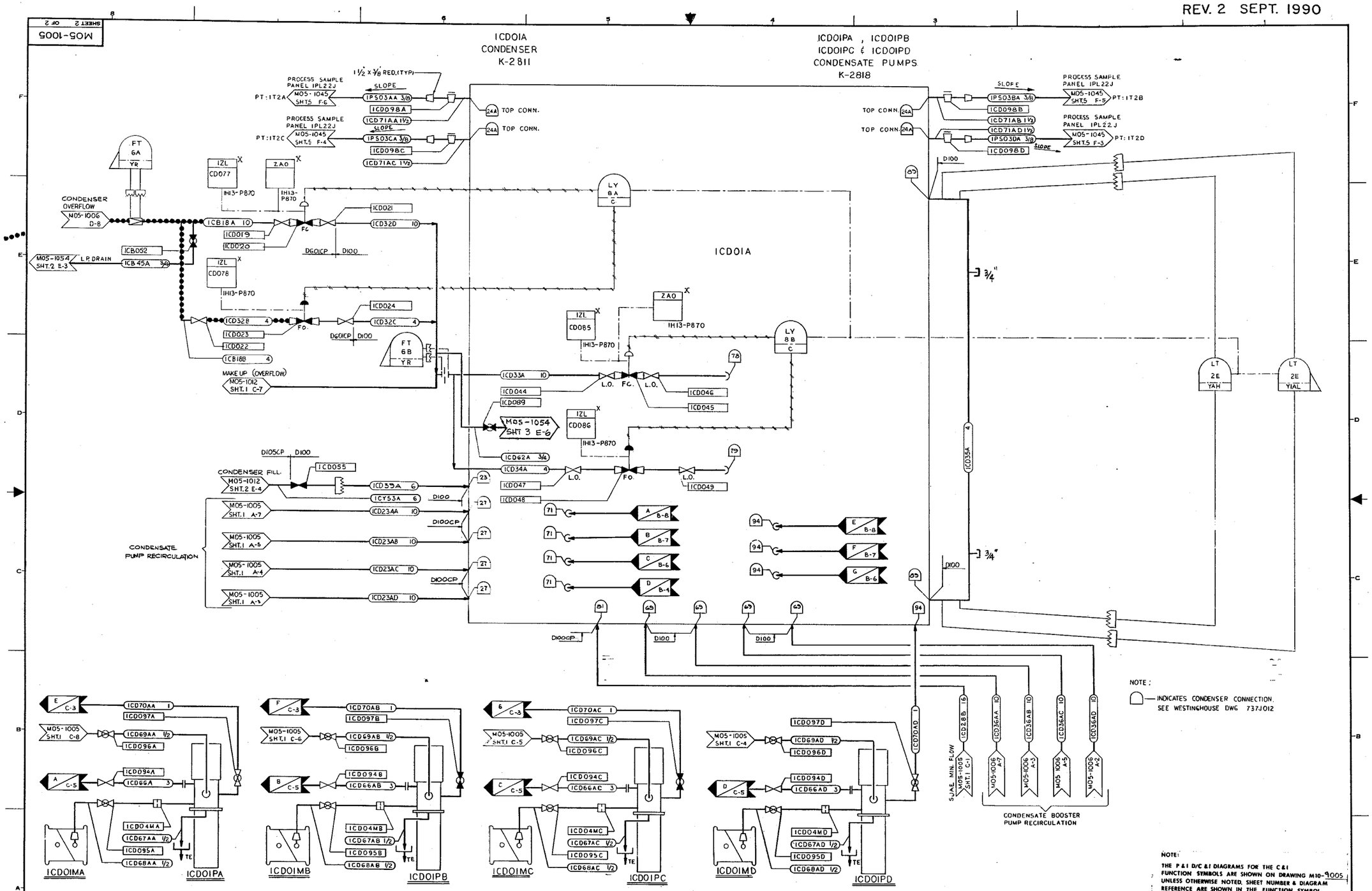

CLINTON POWER STATION
UPDATED SAFETY ANALYSIS REPORT

FIGURE 3.6-1
DIVISIONAL SEPARATION AND
HIGH-ENERGY P&ID'S-
CONDENSATE
SHEET 15 OF 111

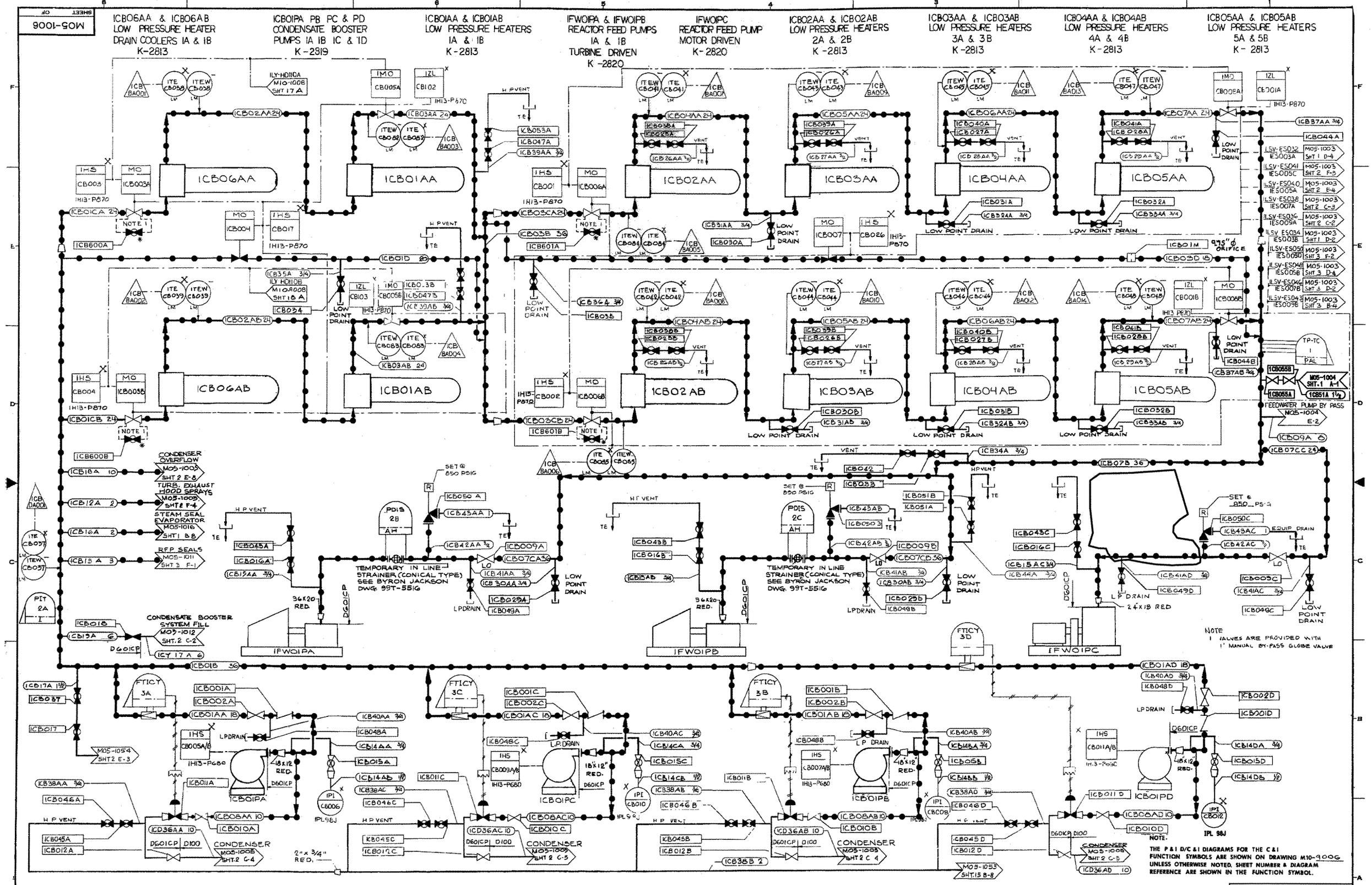

CLINTON POWER STATION
UPDATED SAFETY ANALYSIS REPORT

FIGURE 3.6-1
DIVISIONAL SEPARATION AND HIGH-ENERGY P&ID'S- CONDENSATE BOOSTER SHEET 16 OF 111

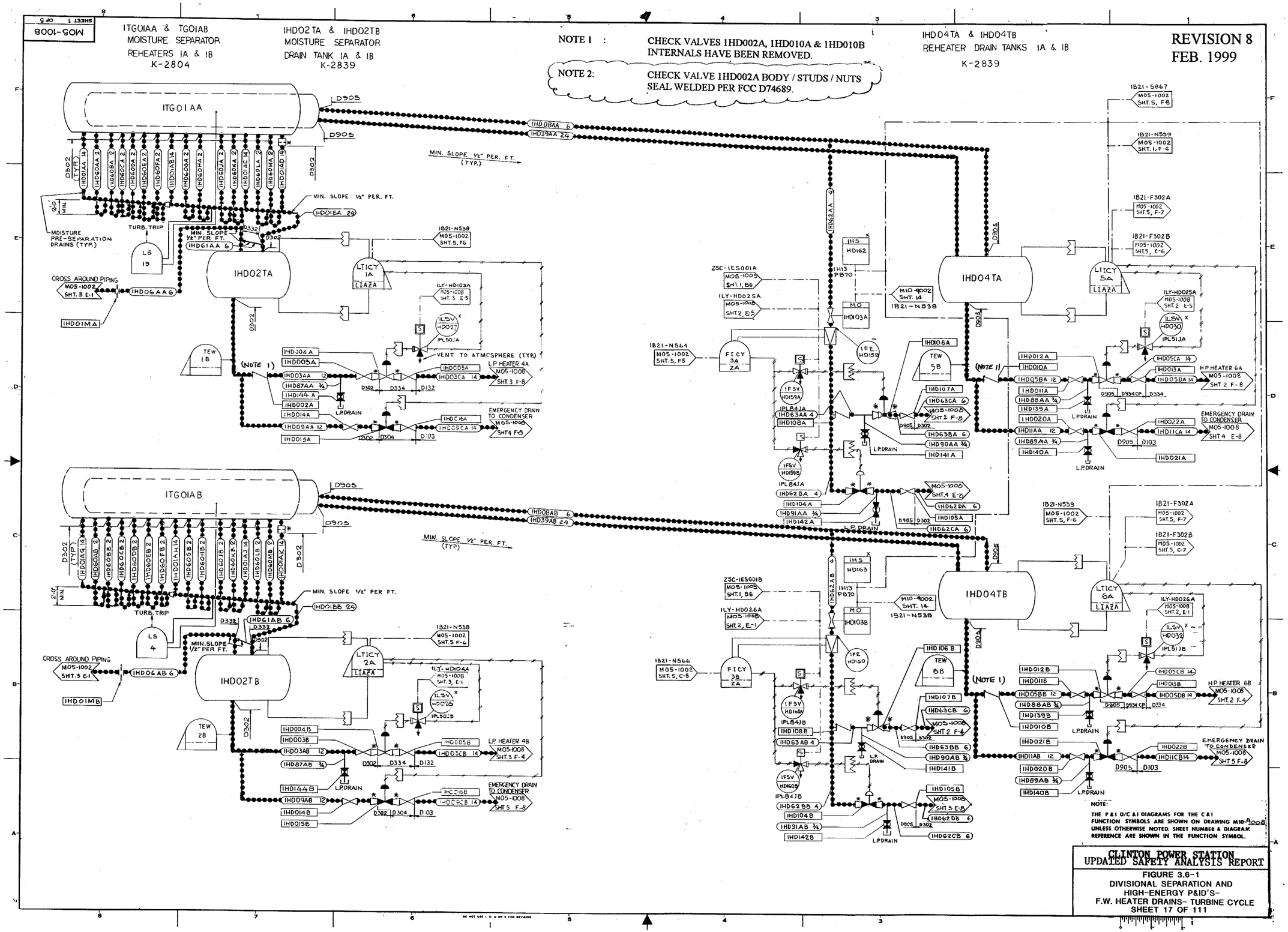
M05-1008
SHEET 1 OF 5
ITG01AA & TG01AB
MOISTURE SEPARATOR
REHEATERS 1A & 1B
K-2804
1HD02TA & 1HD02TB
MOISTURE SEPARATOR
DRAIN TANK 1A & 1B
K-2839
NOTE 1 : CHECK VALVES 1HD002A, 1HD010A & 1HD010B INTERNALS HAVE BEEN REMOVED.
NOTE 2: CHECK VALVE 1HD002A BODY / STUDS / NUTS SEAL WELDED PER FCC D74689.
1HD04TA & 1HD04TB
REHEATER DRAIN TANKS 1A & 1B
K-2839
REVISION 8
FEB. 1999
ITG01AA
ITG01AB
1HD02TA
1HD02TB
1HD04TA
1HD04TB
MIN. SLOPE 1/2" PER. FT. (TYP.)
MIN. SLOPE 1/2" PER. FT.
MOISTURE PRE-SEPARATION DRAINS (TYP.)
TURB. TRIP
CROSS AROUND PIPING
VENT TO ATMOSPHERE (TYP)
LP HEATER 4A
LP HEATER 4B
H.P HEATER 6A
H.P HEATER 6B
EMERGENCY DRAIN TO CONDENSER
L.P.DRAIN
(NOTE 1)
NOTE:
THE P&I D/C &I DIAGRAMS FOR THE C&I FUNCTION SYMBOLS ARE SHOWN ON DRAWING M10-9002 UNLESS OTHERWISE NOTED. SHEET NUMBER & DIAGRAM REFERENCE ARE SHOWN IN THE FUNCTION SYMBOL.
CLINTON POWER STATION
UPDATED SAFETY ANALYSIS REPORT
FIGURE 3.6-1
DIVISIONAL SEPARATION AND
HIGH-ENERGY P&ID'S-
F.W. HEATER DRAINS- TURBINE CYCLE
SHEET 17 OF 111

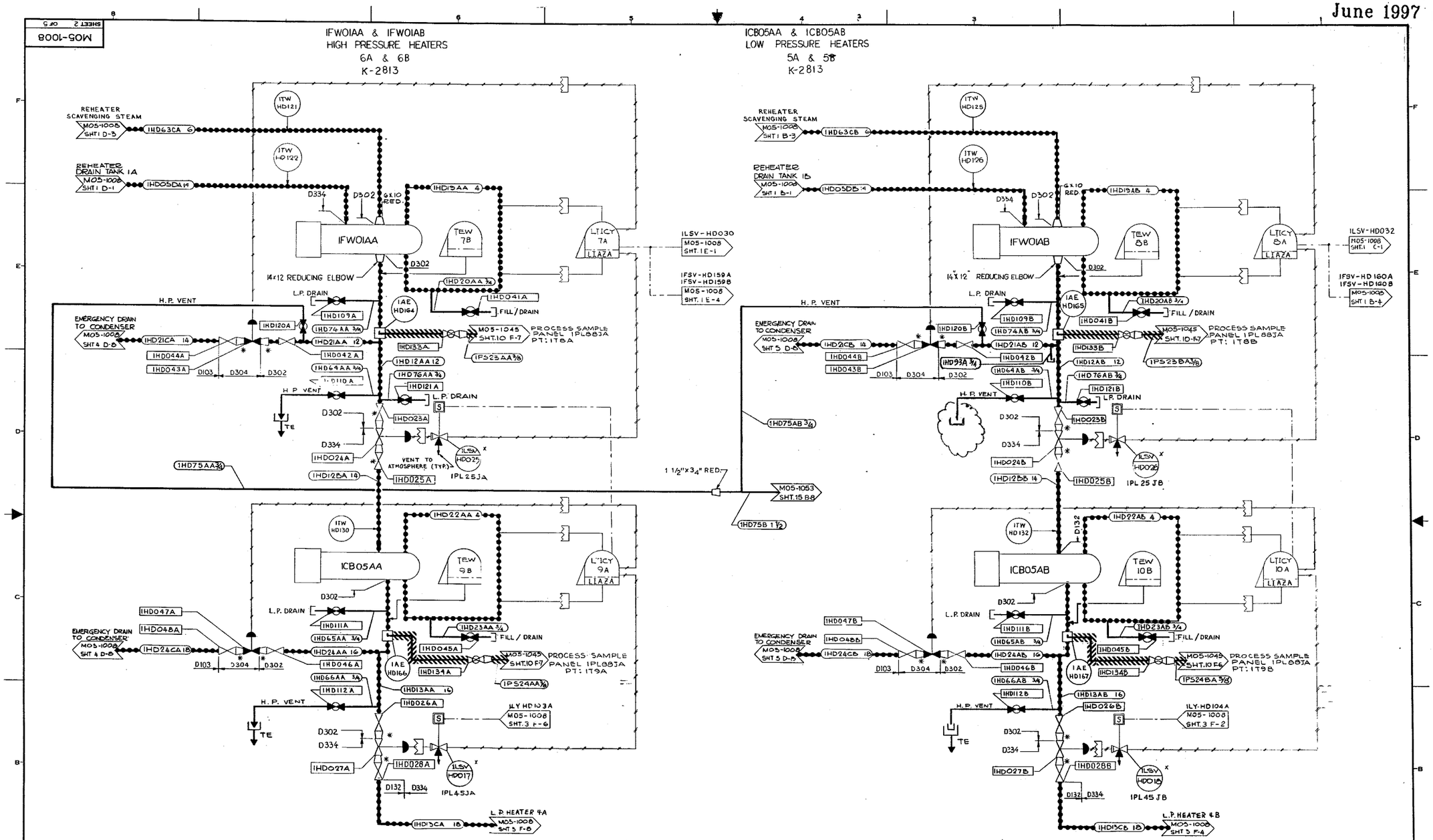
M05-1008
SHEET 2 OF 5
1FW01AA & 1FW01AB
HIGH PRESSURE HEATERS
6A & 6B
K-2813
1CB05AA & 1CB05AB
LOW PRESSURE HEATERS
5A & 5B
K-2813
REHEATER SCAVENGING STEAM
REHEATER DRAIN TANK 1A
REHEATER DRAIN TANK 1B
1FW01AA
1FW01AB
1CB05AA
1CB05AB
14x12 REDUCING ELBOW
14" X 12" REDUCING ELBOW
6X10 RED.
1 1/2"x3/4" RED.
H.P. VENT
L.P. DRAIN
FILL / DRAIN
EMERGENCY DRAIN TO CONDENSER
PROCESS SAMPLE PANEL 1PL88JA PT: 1T9A
PROCESS SAMPLE PANEL 1PL88JA PT: 1T9B
VENT TO ATMOSPHERE (TYP.)
1PL25JA
1PL25JB
1PL45JA
1PL45JB
L.P. HEATER 4A
L.P. HEATER 4B
ILSV-HD030
IFSV-HD159A
IFSV-HD159B
ILSV-HD032
IFSV-HD160A
IFSV-HD160B
ILY-HD103A
ILY-HD104A
NOTE:
THE P & I D/C & I DIAGRAMS FOR THE C & I FUNCTION SYMBOLS ARE SHOWN ON DRAWING M10-9008 UNLESS OTHERWISE NOTED. SHEET NUMBER & DIAGRAM REFERENCE ARE SHOWN IN THE FUNCTION SYMBOL.
CLINTON POWER STATION
UPDATED SAFETY ANALYSIS REPORT
FIGURE 3.6-1
DIVISIONAL SEPARATION AND
HIGH-ENERGY P&ID'S-
F.W. HEATER DRAINS- TURBINE CYCLE
SHEET 18 OF 111

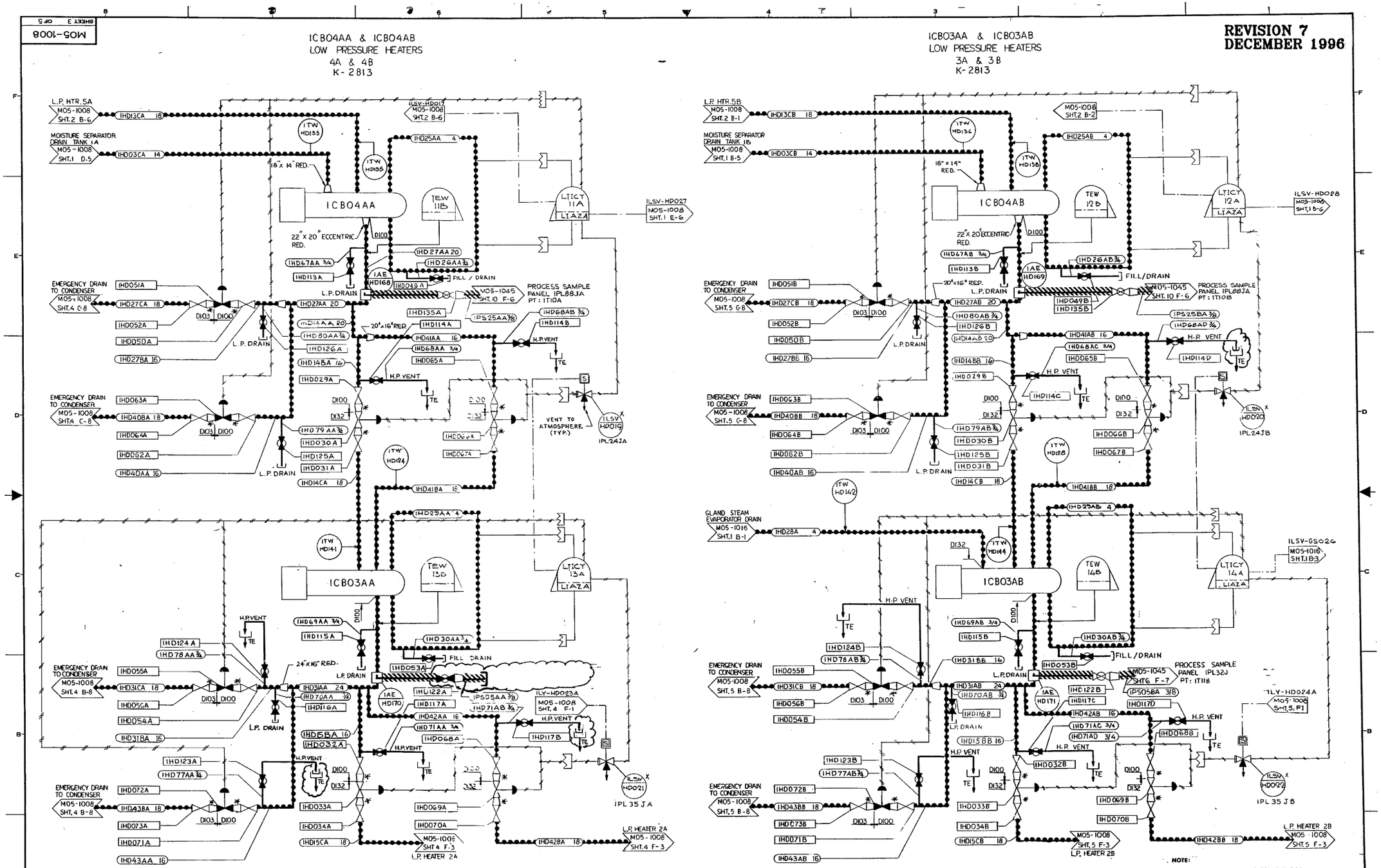

CLINTON POWER STATION
UPDATED SAFETY ANALYSIS REPORT

FIGURE 3.6-1
DIVISIONAL SEPARATION AND
HIGH-ENERGY P&ID'S-
F.W. HEATER DRAINS- TURBINE CYCLE
(SHEET 19 OF 111)

REV. 2 SEPT. 1990

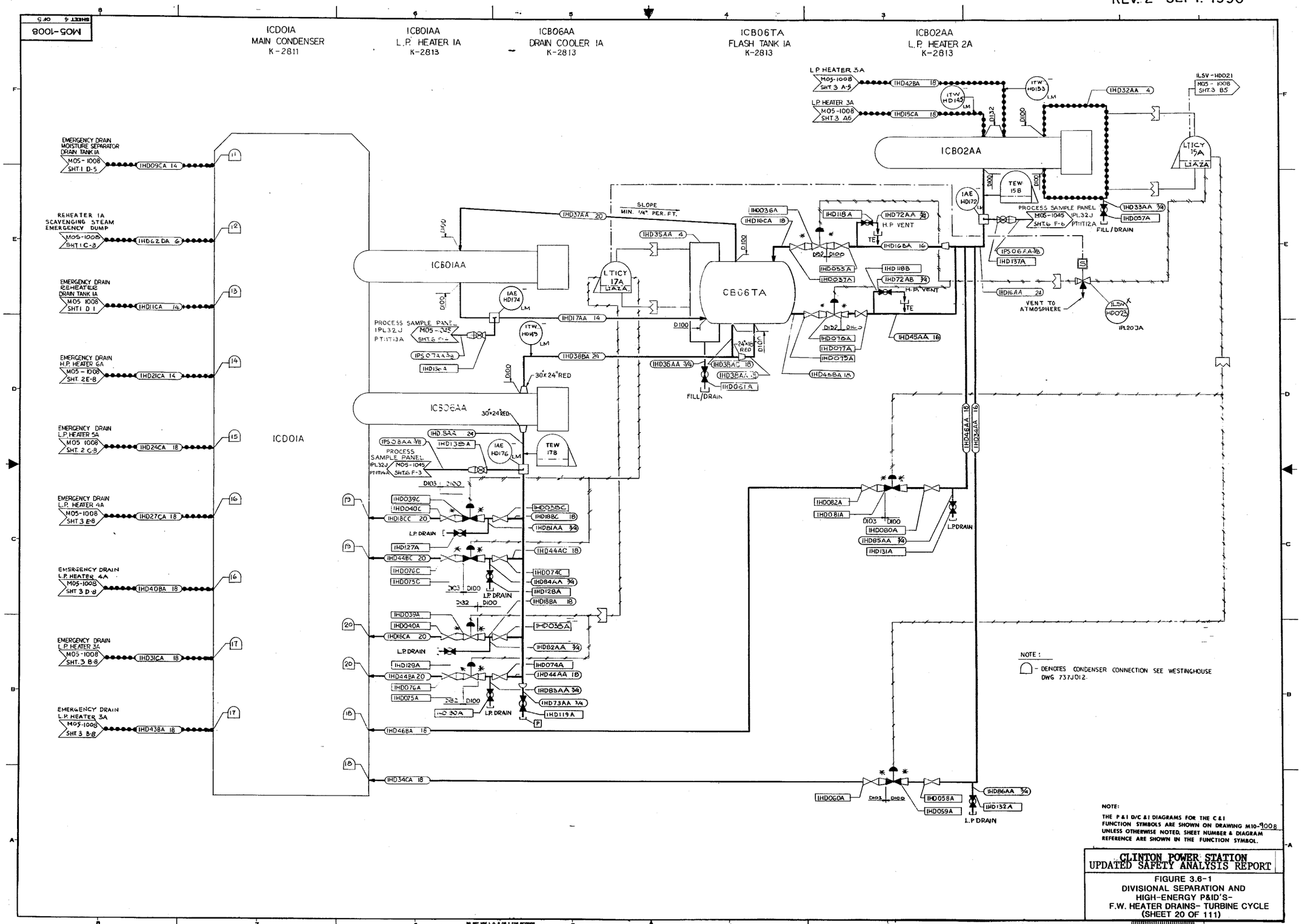

NOTE:

⌒ - DENOTES CONDENSER CONNECTION SEE WESTINGHOUSE DWG 737J012.

NOTE:

THE P & I D/C & I DIAGRAMS FOR THE C & I FUNCTION SYMBOLS ARE SHOWN ON DRAWING M10-9008 UNLESS OTHERWISE NOTED. SHEET NUMBER & DIAGRAM REFERENCE ARE SHOWN IN THE FUNCTION SYMBOL.

CLINTON POWER STATION
UPDATED SAFETY ANALYSIS REPORT

FIGURE 3.6-1
DIVISIONAL SEPARATION AND
HIGH-ENERGY P&ID'S-
F.W. HEATER DRAINS- TURBINE CYCLE
(SHEET 20 OF 111)

DO NOT USE 1, 0, 2 OR 3 FOR REVISION

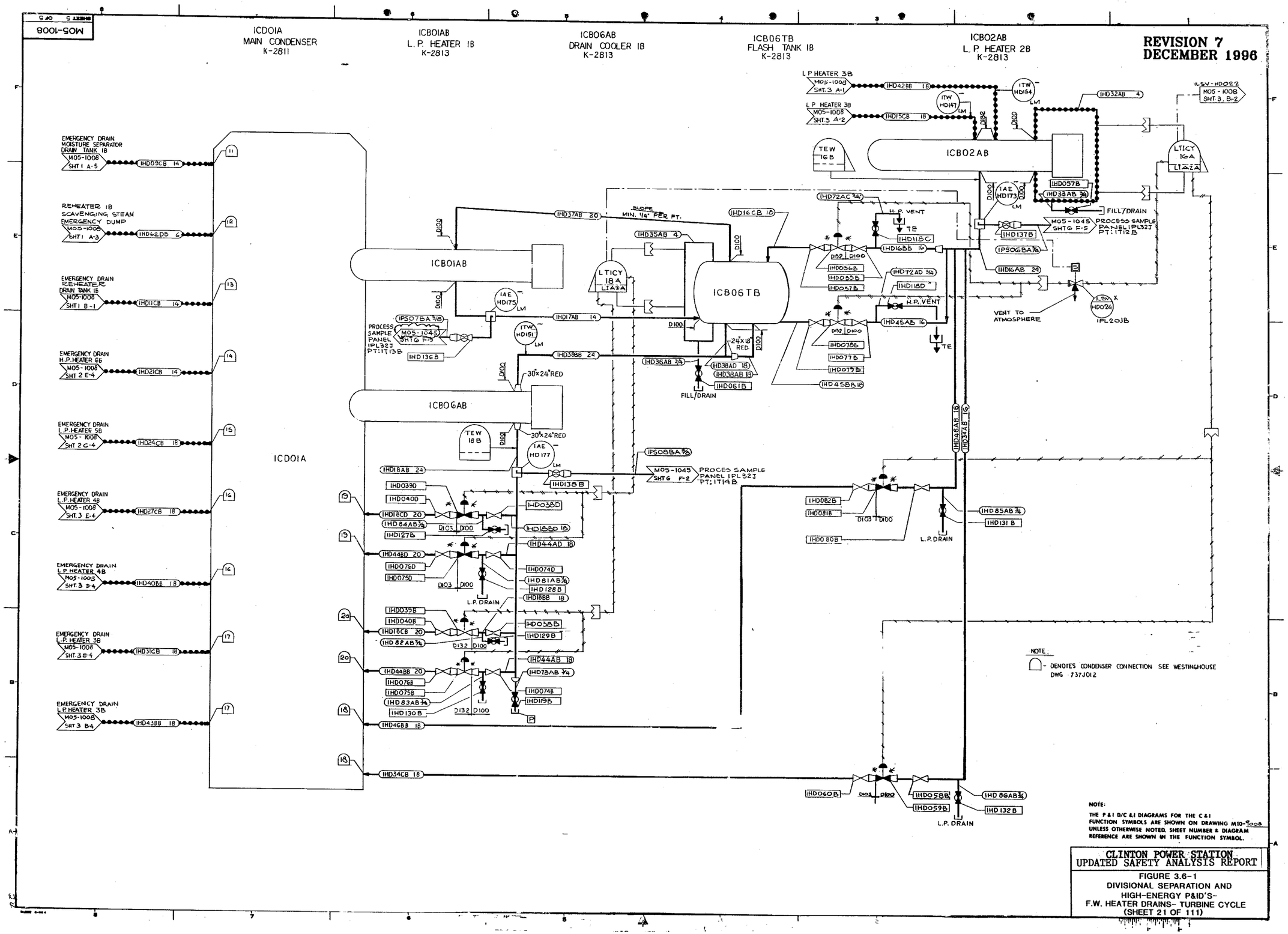
M05-1008
SHEET 5 OF 5
ICD01A
MAIN CONDENSER
K-2811
ICB01AB
L.P. HEATER 1B
K-2813
ICB06AB
DRAIN COOLER 1B
K-2813
ICB06TB
FLASH TANK 1B
K-2813
ICB02AB
L.P. HEATER 2B
K-2813
REVISION 7
DECEMBER 1996
EMERGENCY DRAIN MOISTURE SEPARATOR DRAIN TANK 1B
M05-1008 SHT 1 A-5
1HD09CB 14
REHEATER 1B SCAVENGING STEAM EMERGENCY DUMP
M05-1008 SHT 1 A-3
1HD62DB 6
EMERGENCY DRAIN REHEATER DRAIN TANK 1B
M05-1008 SHT 1 B-1
1HD11CB 14
EMERGENCY DRAIN H.P. HEATER 6B
M05-1008 SHT 2 E-4
1HD21CB 14
EMERGENCY DRAIN L.P. HEATER 5B
M05-1008 SHT 2 C-4
1HD24CB 18
EMERGENCY DRAIN L.P. HEATER 4B
M05-1008 SHT. 3 E-4
1HD27CB 18
EMERGENCY DRAIN L.P. HEATER 4B
M05-1008 SHT. 3 D-4
1HD40BB 18
EMERGENCY DRAIN L.P. HEATER 3B
M05-1008 SHT. 3 B-4
1HD31CB 18
EMERGENCY DRAIN L.P. HEATER 3B
M05-1008 SHT. 3 B-4
1HD43BB 18
L.P. HEATER 3B
M05-1008 SHT. 3 A-1
1HD42BB 18
L.P. HEATER 3B
M05-1008 SHT. 3 A-2
1HD15CB 18
1HD32AB 4
1LSV-HD022
M05-1008 SHT. 3, B-2
LTICY 16A
LIA22A
1HD37AB 20
SLOPE MIN. 1/4" PER FT.
1HD16CB 18
1HD35AB 4
1HD72AC 3/4
H.P. VENT
1HD118C
1HD16BB 16
1HD72AD 3/4
1HD118D
H.P. VENT
1HD45AB 16
1HD057B
1HD33AB 20
FILL/DRAIN
M05-1045 SHT 6 F-5
PROCESS SAMPLE PANEL 1PL32J PT: 1T12B
1HD137B
1PS06BA 3/8
1HD16AB 24
VENT TO ATMOSPHERE
1LSV HD024
1PL20JB
LTICY 18A
LIA22A
1HD17AB 14
1PS07BA 3/8
PROCESS SAMPLE PANEL 1PL32J PT: 1T13B
M05-1045 SHT 6 F-5
1HD136B
1HD38BB 24
30"x24" RED
24"x18" RED.
1HD36AB 3/4
1HD38AD 18
1HD38AB 18
1HD061B
FILL/DRAIN
1HD056B
1HD055B
1HD057B
1HD070B
1HD077B
1HD079B
1HD45BB 18
1HD46AB 16
1HD34AB 16
1PS08BA 3/8
M05-1045 SHT 6 F-2
PROCES SAMPLE PANEL 1PL32J PT: 1T14B
1HD018AB 24
1HD039D
1HD040D
1HD018CD 20
1HD84AB 3/4
1HD127B
1HD044BD 20
1HD076D
1HD075D
L.P. DRAIN
1HD038D
1HD18BD 16
1HD44AD 18
1HD074D
1HD81AB 3/4
1HD128B
1HD18BB 18
1HD039B
1HD040B
1HD018CB 20
1HD82AB 3/4
1HD038B
1HD129B
1HD044AB 18
1HD044BB 20
1HD076B
1HD075B
1HD83AB 3/4
1HD130B
1HD073AB 3/4
1HD074B
1HD119B
1HD46BB 18
1HD34CB 18
1HD082B
1HD081B
1HD080B
1HD85AB 3/4
1HD131B
L.P. DRAIN
1HD060B
1HD058B
1HD059B
1HD86AB 3/4
1HD132B
L.P. DRAIN
NOTE:
DENOTES CONDENSER CONNECTION SEE WESTINGHOUSE DWG 737J012
NOTE:
THE P&I D/C &I DIAGRAMS FOR THE C&I FUNCTION SYMBOLS ARE SHOWN ON DRAWING M10-9008 UNLESS OTHERWISE NOTED. SHEET NUMBER & DIAGRAM REFERENCE ARE SHOWN IN THE FUNCTION SYMBOL.
CLINTON POWER STATION
UPDATED SAFETY ANALYSIS REPORT
FIGURE 3.6-1
DIVISIONAL SEPARATION AND
HIGH-ENERGY P&ID'S-
F.W. HEATER DRAINS- TURBINE CYCLE
(SHEET 21 OF 111)

REV. 2 SEPT. 1990

M05-1009 SHEET 1 OF 2

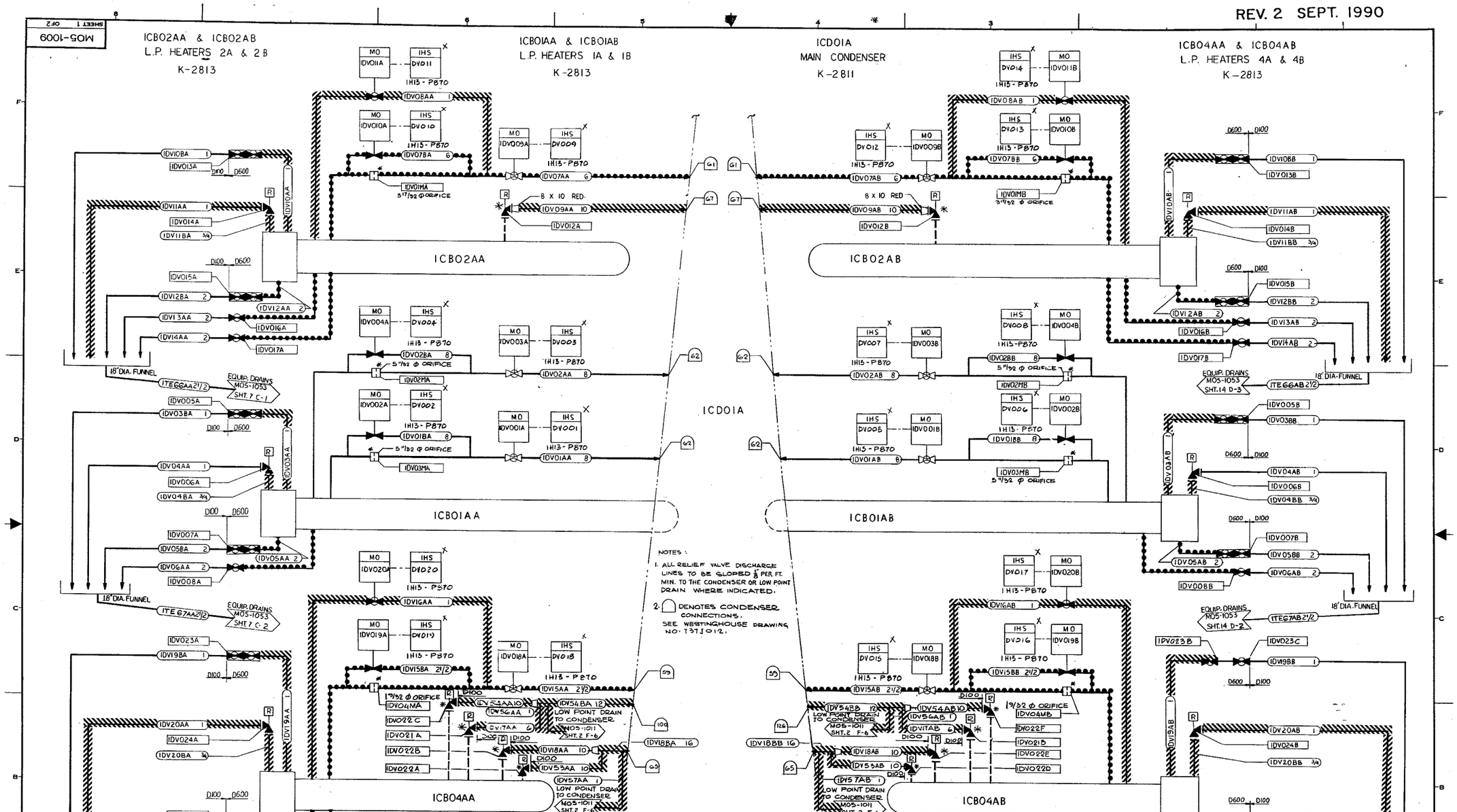

RELIEF VALVE TABULATION

LOCATION	VALVE NO.	SIZE (INCHES)	CAPACITY (LB/HR)	SET PRESS (PSIG)	CROSBY MODEL NO.	FURN. BY
L.P. HEATER 4A SHELL	1DV022E	6R10	762,930	150	JB-3G	W.E. CO.
L.P. HEATER 4A SHELL	1DV022C	6R10	762,930	150	JB-3G	W.E. CO.
L.P. HEATER 4B SHELL	1DV021B	4PG	304,220	150	JB-2G-3	W.E. CO.
L.P. HEATER 4B SHELL	1DV022D	6R10	762,930	150	JB-3G	W.E. CO.
L.P. HEATER 4B SHELL	1DV022E	6R10	762,930	150	JB-3G	W.E. CO.
L.P. HEATER 4B SHELL	1DV022F	6R10	762,930	150	JB-3G	W.E. CO.
L.P. HEATER 4A CHANNEL	1DV024A	3/4 X 1	14,000	850	JR-C	W.E. CO.
L.P. HEATER 4B CHANNEL	1DV024B	3/4 X 1	14,000	850	JR-C	W.E. CO.

RELIEF VALVE TABULATION

LOCATION	VALVE NO.	SIZE (INCHES)	CAPACITY (LB/HR)	SET PRESSURE (PSIG)	CROSBY MODEL NO.	FURNISHED BY
L.P. HEATER 1A CHANNEL	1DV006A	3/4 X 1	14,000	850	JR-C	W.E. CO.
L.P. HEATER 1B CHANNEL	1DV006B	3/4 X 1	14,000	850	JR-C	W.E. CO.
L.P. HEATER 2A SHELL	1DV012A	6Q8	717,330	100	JB-2S	W.E. CO.
L.P. HEATER 2B SHELL	1DV012B	6Q8	717,330	100	JB-2S	W.E. CO.
L.P. HEATER 2A CHANNEL	1DV014A	3/4 X 1	14,000	850	JR-C	W.E. CO.
L.P. HEATER 2B CHANNEL	1DV014B	3/4 X 1	14,000	850	JR-C	W.E. CO.
L.P. HEATER 4A SHELL	1DV021A	4PG	304,220	150	JB-2G-3	W.E. CO.
L.P. HEATER 4A SHELL	1DV022A	6R10	762,930	150	JB-3G	W.E. CO.

THE P&I D/C & I DIAGRAMS FOR THE C&I FUNCTION SYMBOLS ARE SHOWN ON DRAWING M10-9009 UNLESS OTHERWISE NOTED. SHEET NUMBER & DIAGRAM

CLINTON POWER STATION
UPDATED SAFETY ANALYSIS REPORT

FIGURE 3.6-1
DIVISIONAL SEPARATION AND
HIGH-ENERGY P&ID'S-
F.W. HEATER MISC. VENTS & DRAINS
(SHEET 22 OF 111)

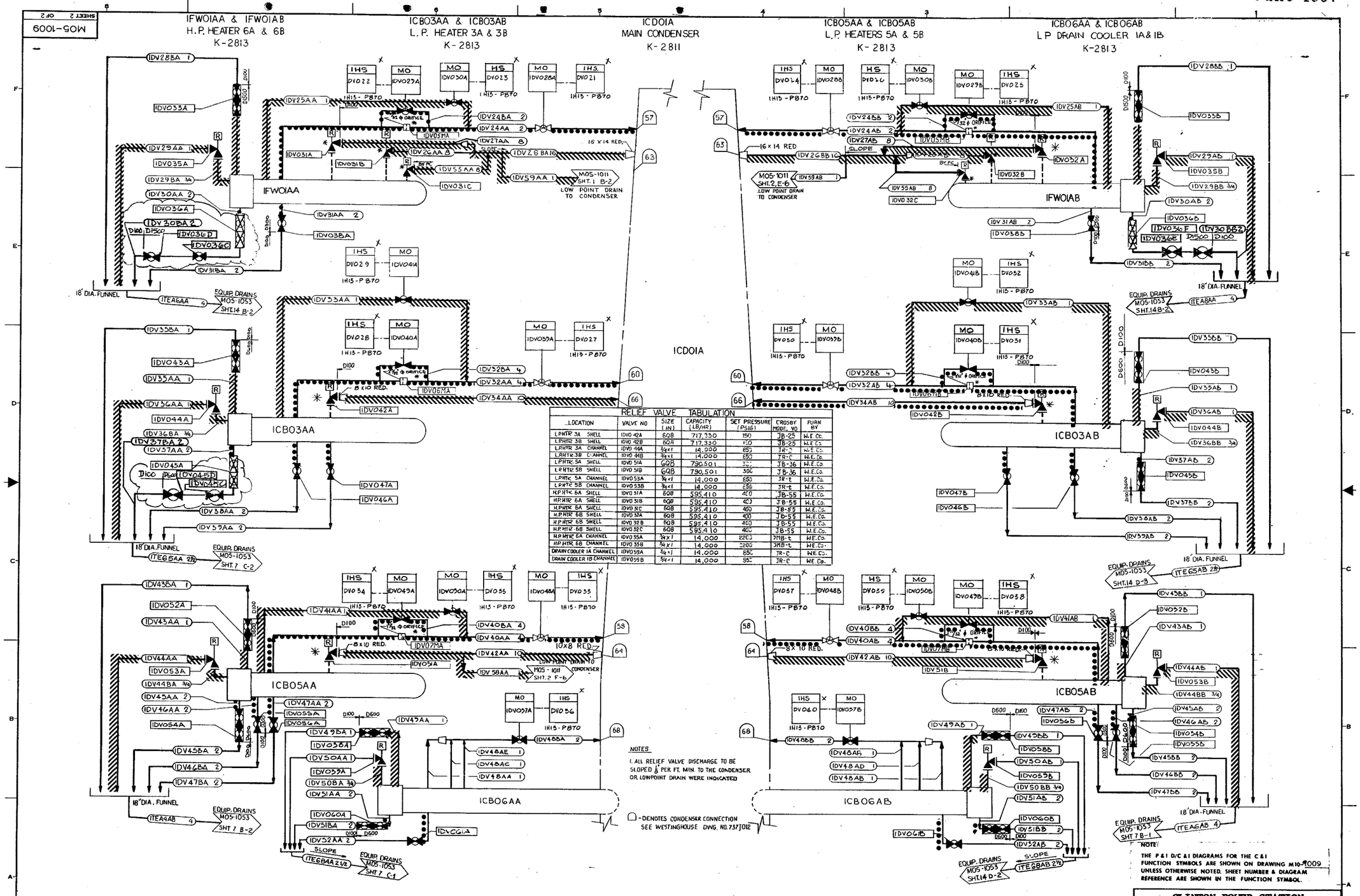

RELIEF VALVE TABULATION

LOCATION	VALVE NO	SIZE (IN)	CAPACITY (LB/HR)	SET PRESSURE (PSIG)	CROSBY MODEL NO	FURN BY
L.P.HTR 3A SHELL	IDV042A	6Q8	717,330	150	JB-25	W.E.Co.
L.P.HTR 3B SHELL	IDV042B	6Q8	717,330	150	JB-25	W.E.Co.
L.P.HTR 3A CHANNEL	IDV044A	3/4×1	14,000	850	JR-C	W.E.Co.
L.P.HTR 3B CHANNEL	IDV044B	3/4×1	14,000	850	JR-C	W.E.Co.
L.P.HTR 5A SHELL	IDV051A	6Q8	790,501	300	JB-36	W.E.Co.
L.P.HTR 5B SHELL	IDV051B	6Q8	790,501	300	JB-36	W.E.Co.
L.P.HTR 5A CHANNEL	IDV053A	3/4×1	14,000	850	JR-t	W.E.Co.
L.P.HTR 5B CHANNEL	IDV053B	3/4×1	14,000	850	JR-t	W.E.Co.
H.P.HTR 6A SHELL	IDV031A	6Q8	595,410	400	JB-55	W.E.Co.
H.P.HTR 6A SHELL	IDV031B	6Q8	595,410	400	JB-55	W.E.Co.
H.P.HTR 6A SHELL	IDV031C	6Q8	595,410	400	JB-55	W.E.Co.
H.P.HTR 6B SHELL	IDV032A	6Q8	595,410	400	JB-55	W.E.Co.
H.P.HTR 6B SHELL	IDV032B	6Q8	595,410	400	JB-55	W.E.Co.
H.P.HTR 6B SHELL	IDV032C	6Q8	595,410	400	JB-55	W.E.Co.
H.P.HTR 6A CHANNEL	IDV035A	3/4×1	14,000	2200	JHB-t	W.E.Co.
H.P.HTR 6B CHANNEL	IDV035B	3/4×1	14,000	2200	JHB-t	W.E.Co.
DRAIN COOLER 1A CHANNEL	IDV059A	3/4×1	14,000	850	JR-C	W.E.Co.
DRAIN COOLER 1B CHANNEL	IDV059B	3/4×1	14,000	850	JR-C	W.E.Co.

CLINTON POWER STATION
UPDATED SAFETY ANALYSIS REPORT

FIGURE 3.6-1
DIVISIONAL SEPARATION AND
HIGH-ENERGY P&ID'S-
F.W. HEATER MISC. VENTS & DRAINS
(SHEET 23 OF 111)

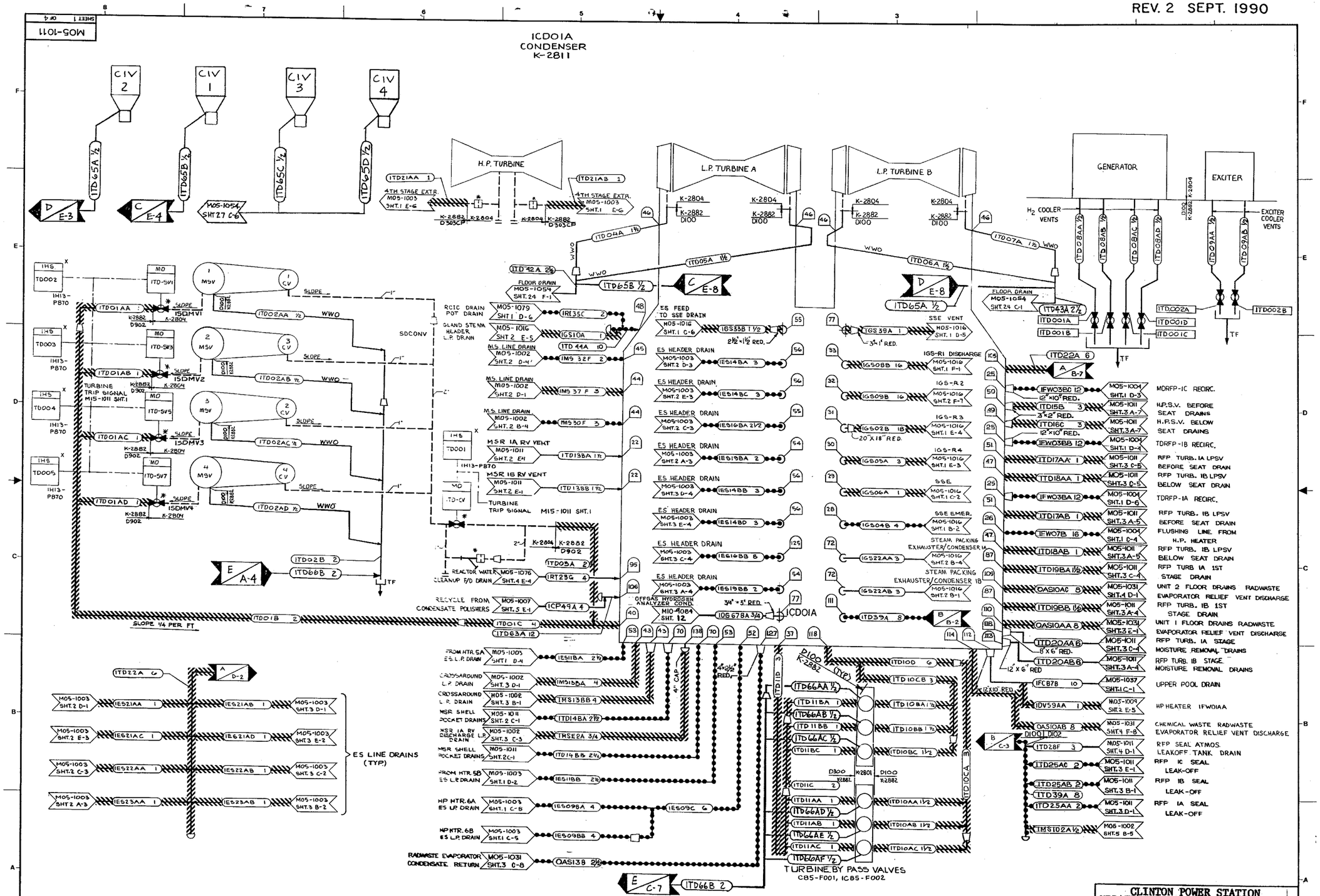

CLINTON POWER STATION
UPDATED SAFETY ANALYSIS REPORT

FIGURE 3.6-1
DIVISIONAL SEPARATION AND HIGH-ENERGY P&ID'S- TURBINE GEN. MISC. VENTS & DRAINS (SHEET 24 OF 111)

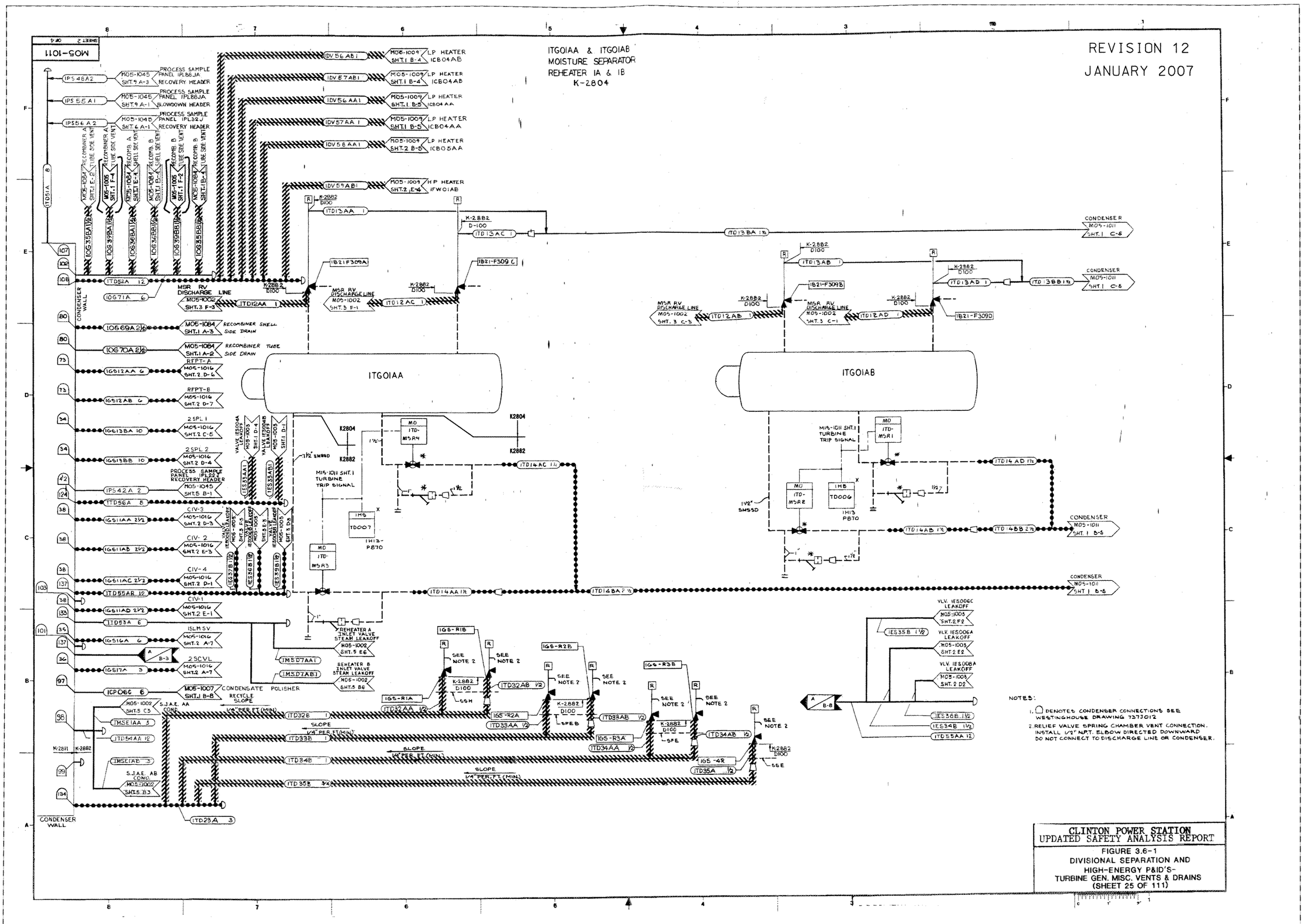

CLINTON POWER STATION
UPDATED SAFETY ANALYSIS REPORT

FIGURE 3.6-1
DIVISIONAL SEPARATION AND
HIGH-ENERGY P&ID'S-
TURBINE GEN. MISC. VENTS & DRAINS
(SHEET 25 OF 111)

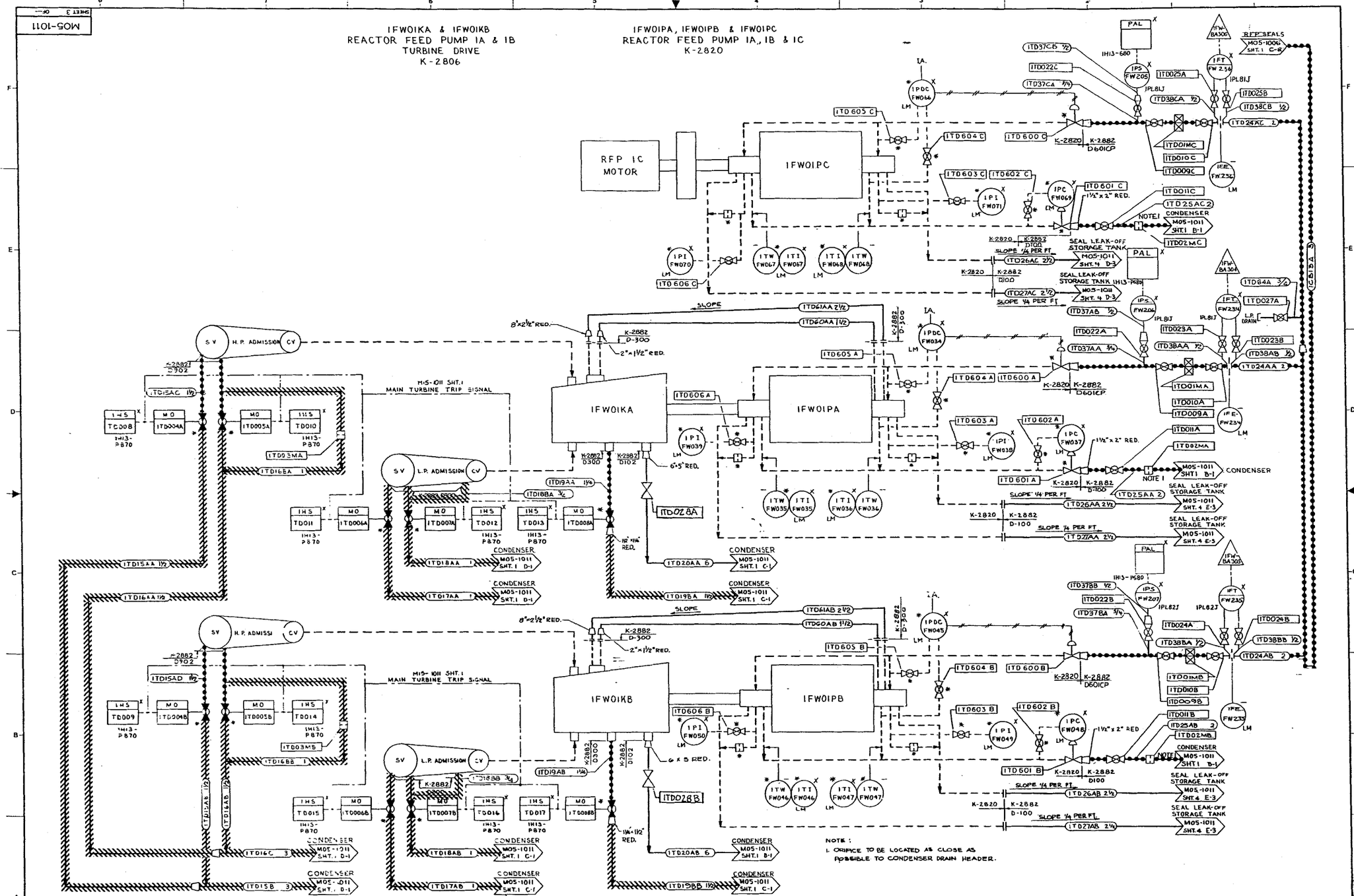

CLINTON POWER STATION
UPDATED SAFETY ANALYSIS REPORT

FIGURE 3.6-1
DIVISIONAL SEPARATION AND
HIGH-ENERGY P&ID'S-
TURBINE GEN. MISC. VENTS & DRAINS
(SHEET 26 OF 111)

REV. 5

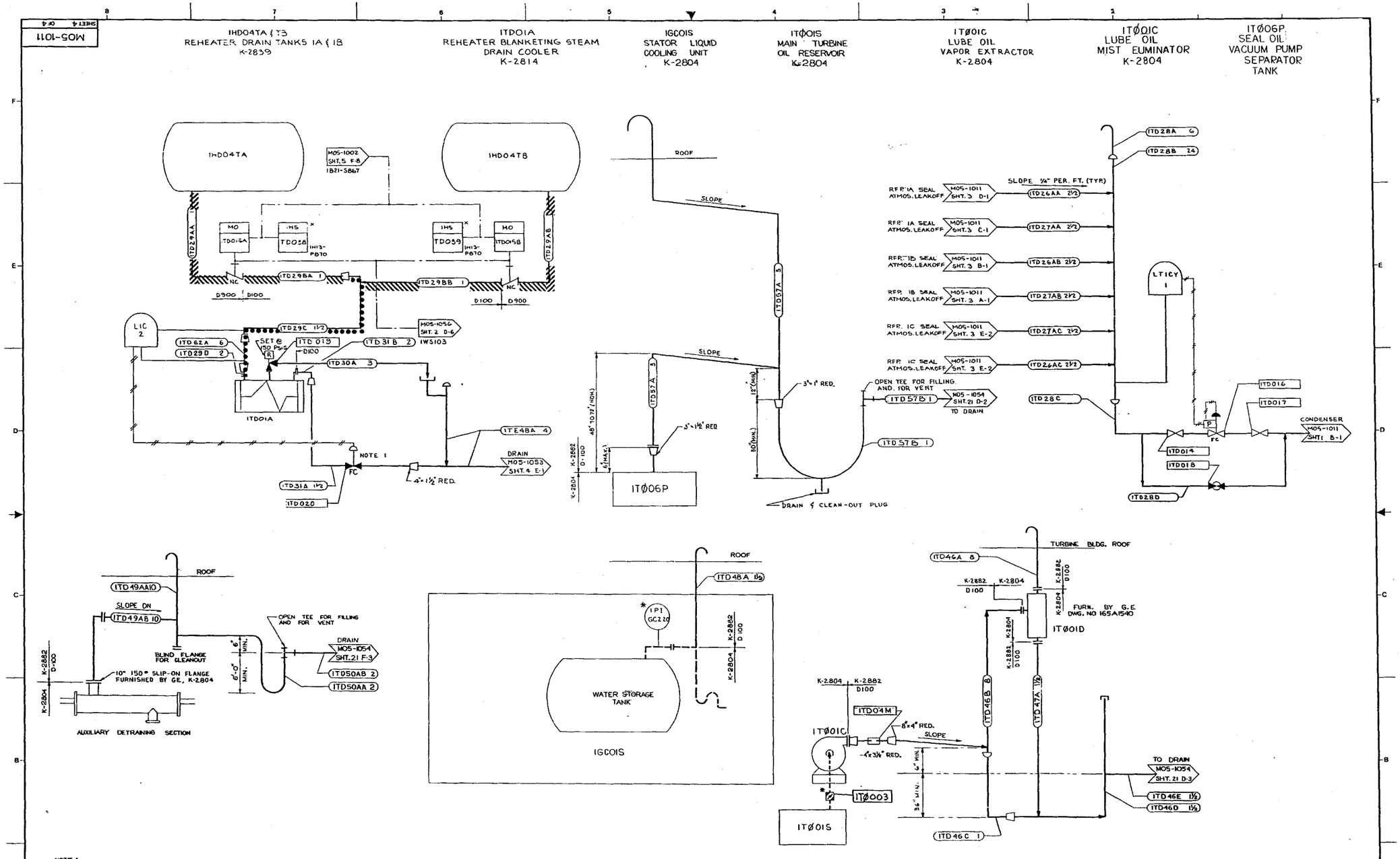

NOTE:
1. CONTROL VALVE 1TD020 TO BE LOCATED CLOSE TO DRAIN COOLER 1TD01A

NOTE:
THE P&I D/C&I DIAGRAMS FOR THE C&I FUNCTION SYMBOLS ARE SHOWN ON DRAWING M10-9011 UNLESS OTHERWISE NOTED. SHEET NUMBER & DIAGRAM REFERENCE ARE SHOWN IN THE FUNCTION SYMBOL.

CLINTON POWER STATION
UPDATED SAFETY ANALYSIS REPORT

FIGURE 3.6-1
DIVISIONAL SEPARATION AND
HIGH-ENERGY P&ID'S-
TURBINE GEN. MISC. VENTS & DRAINS
(SHEET 27 OF 111)

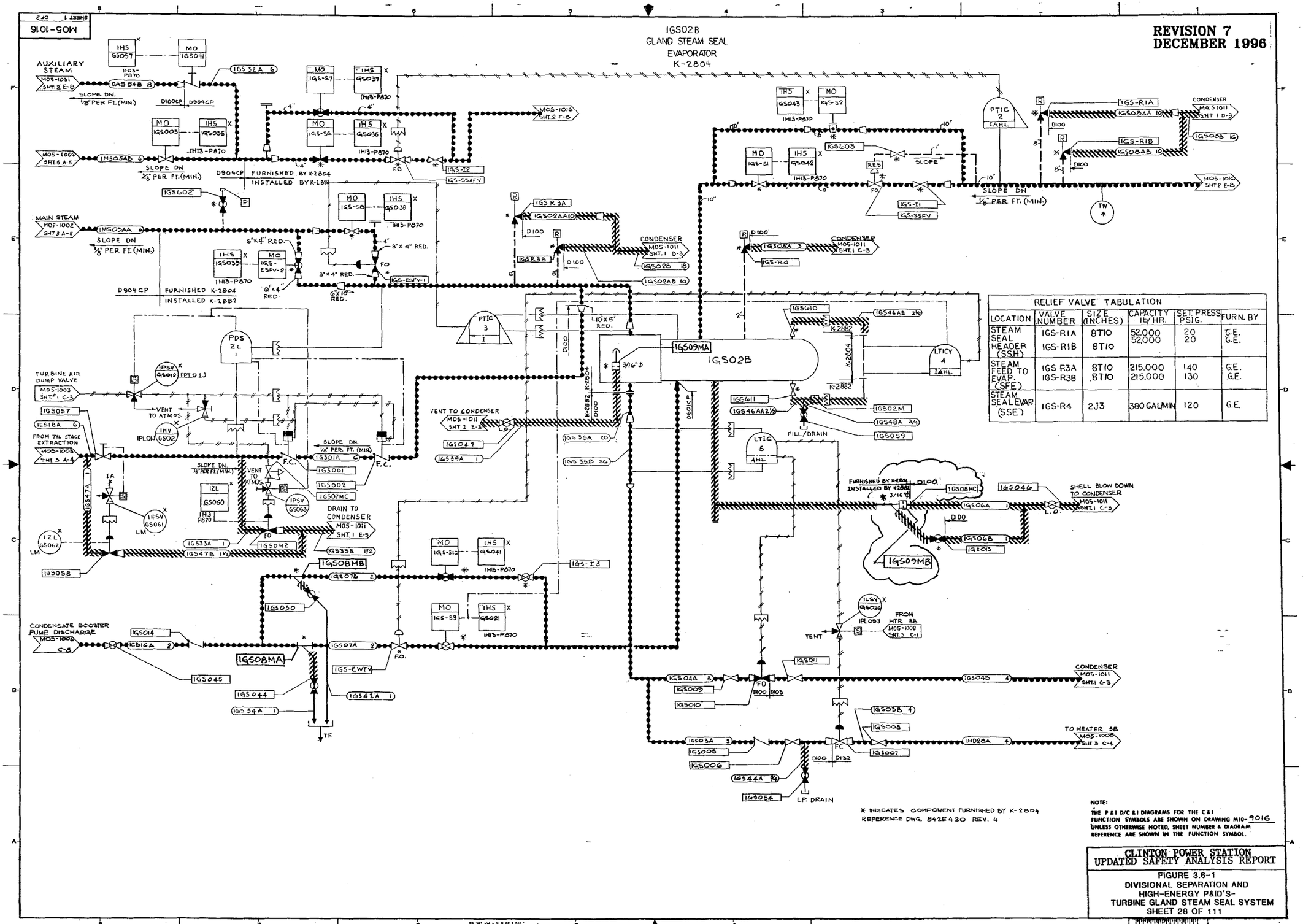

RELIEF VALVE TABULATION					
LOCATION	VALVE NUMBER	SIZE (INCHES)	CAPACITY LB/HR.	SET PRESS PSIG.	FURN. BY
STEAM SEAL HEADER (SSH)	1GS-R1A	8T10	52,000	20	G.E.
	1GS-R1B	8T10	52,000	20	G.E.
STEAM FEED TO EVAP. (SFE)	1GS R3A	8T10	215,000	140	G.E.
	1GS-R3B	8T10	215,000	130	G.E.
STEAM SEAL EVAP. (SSE)	1GS-R4	2J3	380 GAL/MIN	120	G.E.

NOTE:
THE P & I D/C & I DIAGRAMS FOR THE C & I FUNCTION SYMBOLS ARE SHOWN ON DRAWING M10-9016 UNLESS OTHERWISE NOTED. SHEET NUMBER & DIAGRAM REFERENCE ARE SHOWN IN THE FUNCTION SYMBOL.

CLINTON POWER STATION
UPDATED SAFETY ANALYSIS REPORT

FIGURE 3.6-1
DIVISIONAL SEPARATION AND
HIGH-ENERGY P&ID'S-
TURBINE GLAND STEAM SEAL SYSTEM
SHEET 28 OF 111

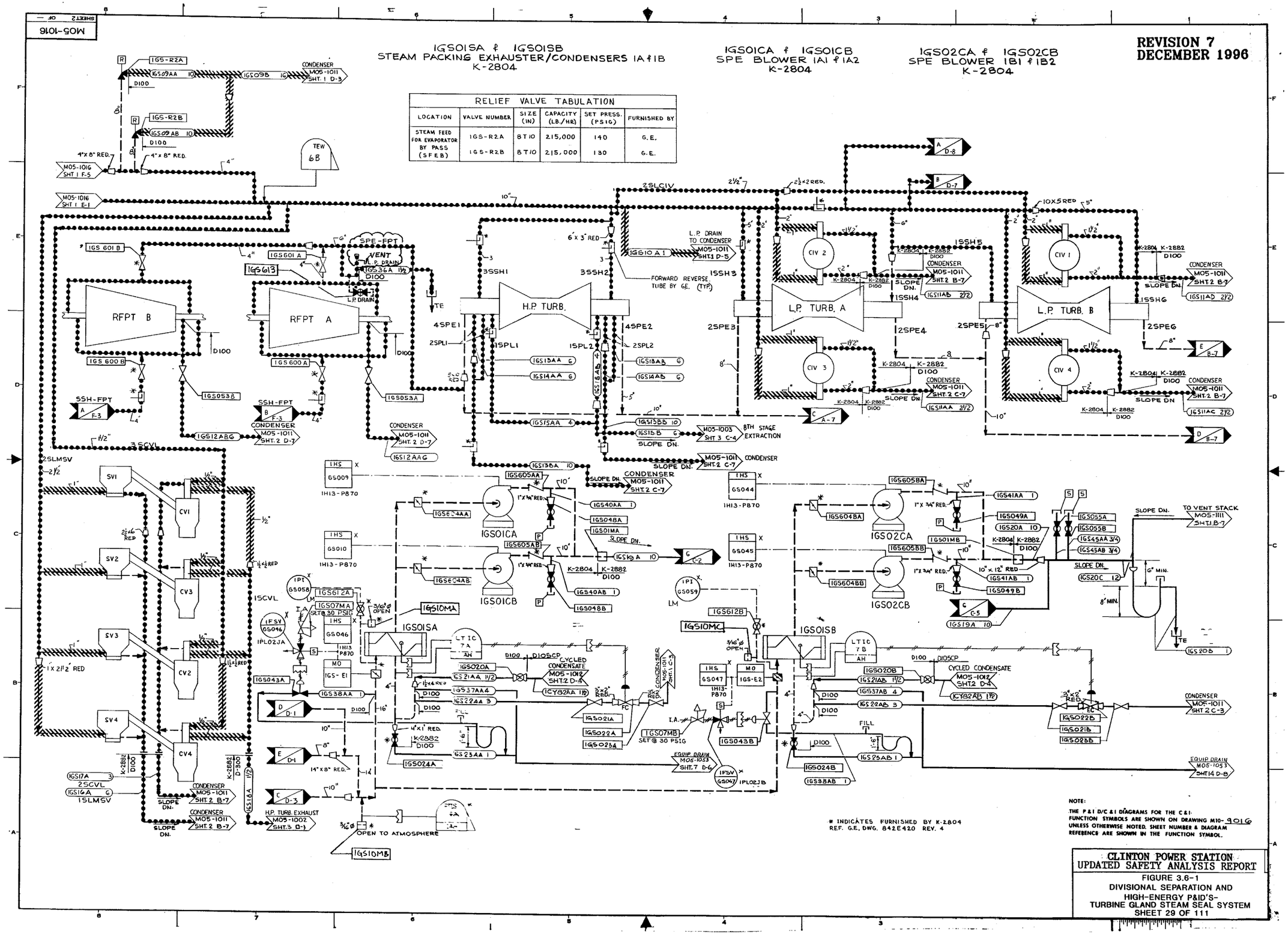

RELIEF VALVE TABULATION

LOCATION	VALVE NUMBER	SIZE (IN)	CAPACITY (LB./HR)	SET PRESS. (PSIG)	FURNISHED BY
STEAM FEED FOR EVAPORATOR BY PASS (SFEB)	IGS-R2A	8 T 10	215,000	140	G.E.
	IGS-R2B	8 T 10	215,000	130	G.E.

NOTE:
THE P&I D/C & I DIAGRAMS FOR THE C&I FUNCTION SYMBOLS ARE SHOWN ON DRAWING M10-9016 UNLESS OTHERWISE NOTED. SHEET NUMBER & DIAGRAM REFERENCE ARE SHOWN IN THE FUNCTION SYMBOL.

CLINTON POWER STATION
UPDATED SAFETY ANALYSIS REPORT

FIGURE 3.6-1
DIVISIONAL SEPARATION AND
HIGH-ENERGY P&ID'S-
TURBINE GLAND STEAM SEAL SYSTEM
SHEET 29 OF 111

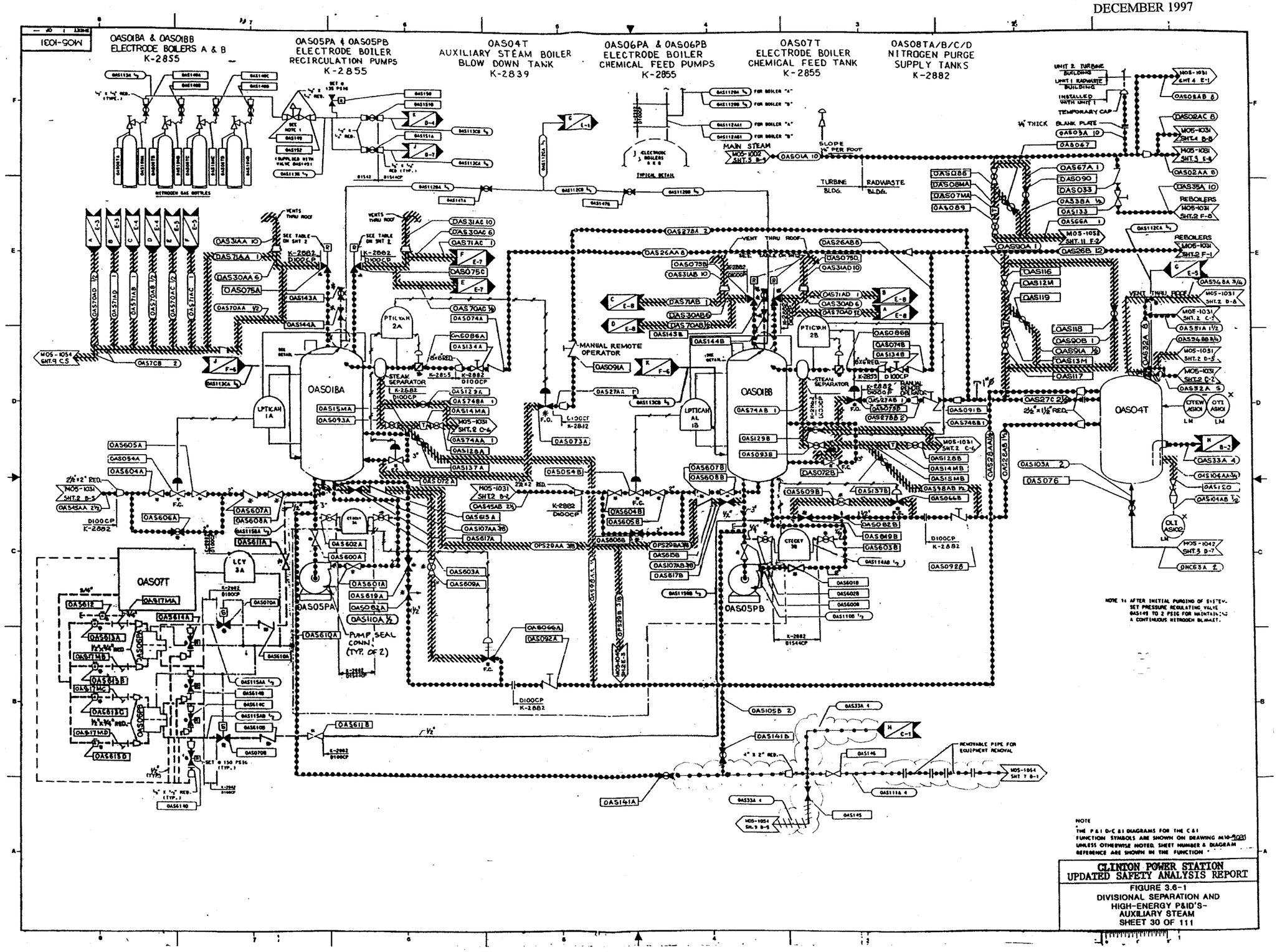

CLINTON POWER STATION
UPDATED SAFETY ANALYSIS REPORT

FIGURE 3.6-1
DIVISIONAL SEPARATION AND
HIGH-ENERGY P&ID'S-
AUXILIARY STEAM
SHEET 30 OF 111

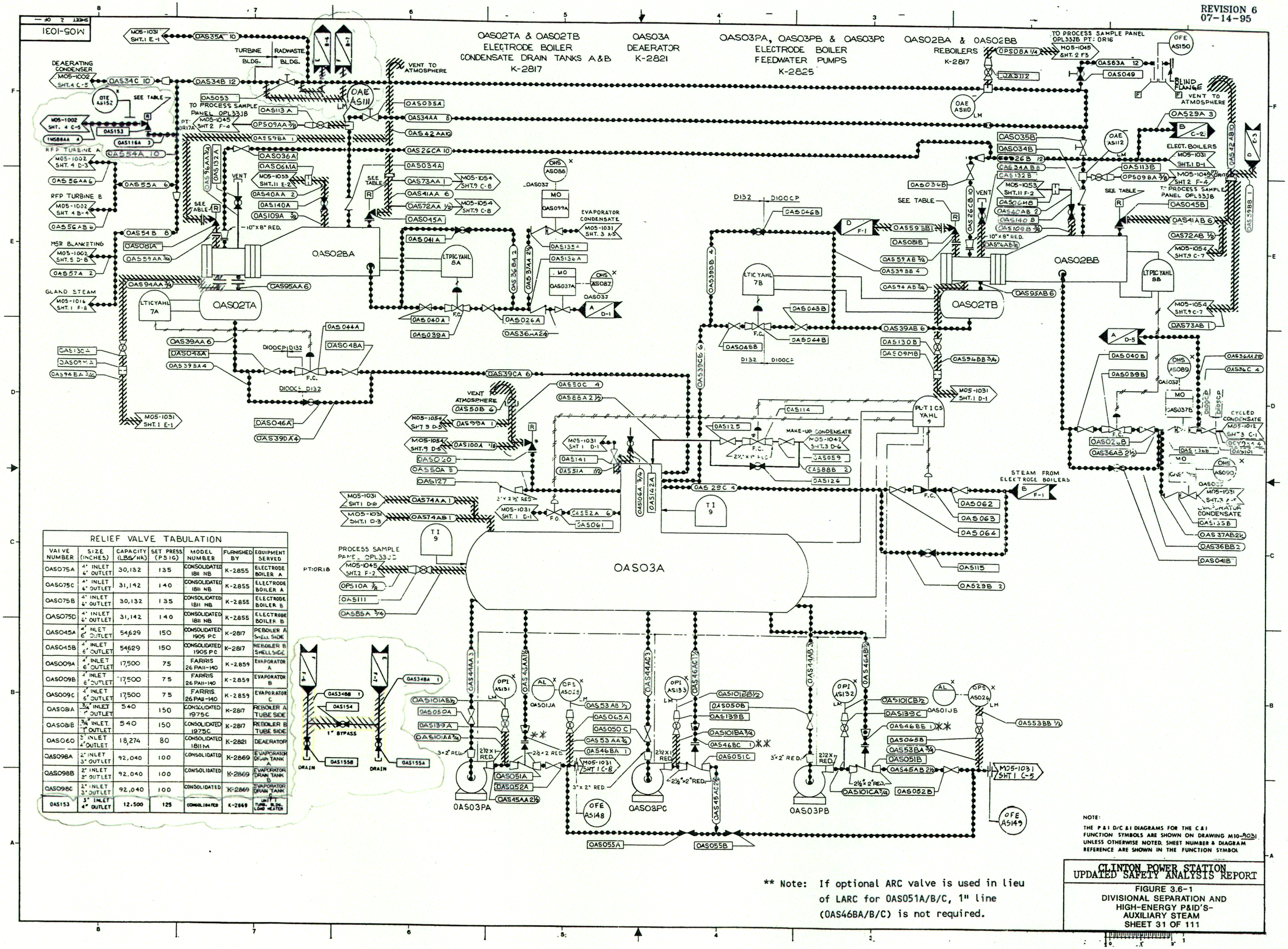

RELIEF VALVE TABULATION						
VALVE NUMBER	SIZE (INCHES)	CAPACITY (LBS/HR)	SET PRESS (PSIG)	MODEL NUMBER	FURNISHED BY	EQUIPMENT SERVED
OAS075A	4" INLET 6" OUTLET	30,132	135	CONSOLIDATED 1811 NB	K-2855	ELECTRODE BOILER A
OAS075C	4" INLET 6" OUTLET	31,142	140	CONSOLIDATED 1811 NB	K-2855	ELECTRODE BOILER A
OAS075B	4" INLET 6" OUTLET	30,132	135	CONSOLIDATED 1811 NB	K-2855	ELECTRODE BOILER B
OAS075D	4" INLET 6" OUTLET	31,142	140	CONSOLIDATED 1811 NB	K-2855	ELECTRODE BOILER B
OAS045A	4" INLET 6" OUTLET	54629	150	CONSOLIDATED 1905 PC	K-2817	REBOILER A SHELL SIDE
OAS045B	4" INLET 6" OUTLET	54629	150	CONSOLIDATED 1905 PC	K-2817	REBOILER B SHELL SIDE
OAS009A	4" INLET 6" OUTLET	17,500	75	FARRIS 26 PAII-140	K-2859	EVAPORATOR A
OAS009B	2" INLET 6" OUTLET	17,500	75	FARRIS 26 PAII-140	K-2859	EVAPORATOR B
OAS009C	4" INLET 6" OUTLET	17,500	75	FARRIS 26 PAII-140	K-2859	EVAPORATOR C
OAS081A	3/4" INLET 1" OUTLET	540	150	CONSOLIDATED 1975C	K-2817	REBOILER A TUBE SIDE
OAS081B	3/4" INLET 1" OUTLET	540	150	CONSOLIDATED 1975C	K-2817	REBOILER B TUBE SIDE
OAS060	3" INLET 4" OUTLET	18,274	80	CONSOLIDATED 1811M	K-2821	DEAERATOR
OAS098A	2" INLET 3" OUTLET	92,040	100	CONSOLIDATED	K-2869	EVAPORATOR DRAIN TANK A
OAS098B	2" INLET 3" OUTLET	92,040	100	CONSOLIDATED	K-2869	EVAPORATOR DRAIN TANK B
OAS098C	2" INLET 3" OUTLET	92,040	100	CONSOLIDATED	K-2869	EVAPORATOR DRAIN TANK C
OAS153	3" INLET 4" OUTLET	12.500	125	CONSOLIDATED	K-2869	UNIT 1 TURB. BLDG. LOAD HEATER

** Note: If optional ARC valve is used in lieu of LARC for OAS051A/B/C, 1" line (OAS46BA/B/C) is not required.

NOTE:
THE P & I D/C & I DIAGRAMS FOR THE C & I FUNCTION SYMBOLS ARE SHOWN ON DRAWING M10-9031 UNLESS OTHERWISE NOTED. SHEET NUMBER & DIAGRAM REFERENCE ARE SHOWN IN THE FUNCTION SYMBOL

CLINTON POWER STATION
UPDATED SAFETY ANALYSIS REPORT

FIGURE 3.6-1
DIVISIONAL SEPARATION AND HIGH-ENERGY P&ID'S-
AUXILIARY STEAM
SHEET 31 OF 111

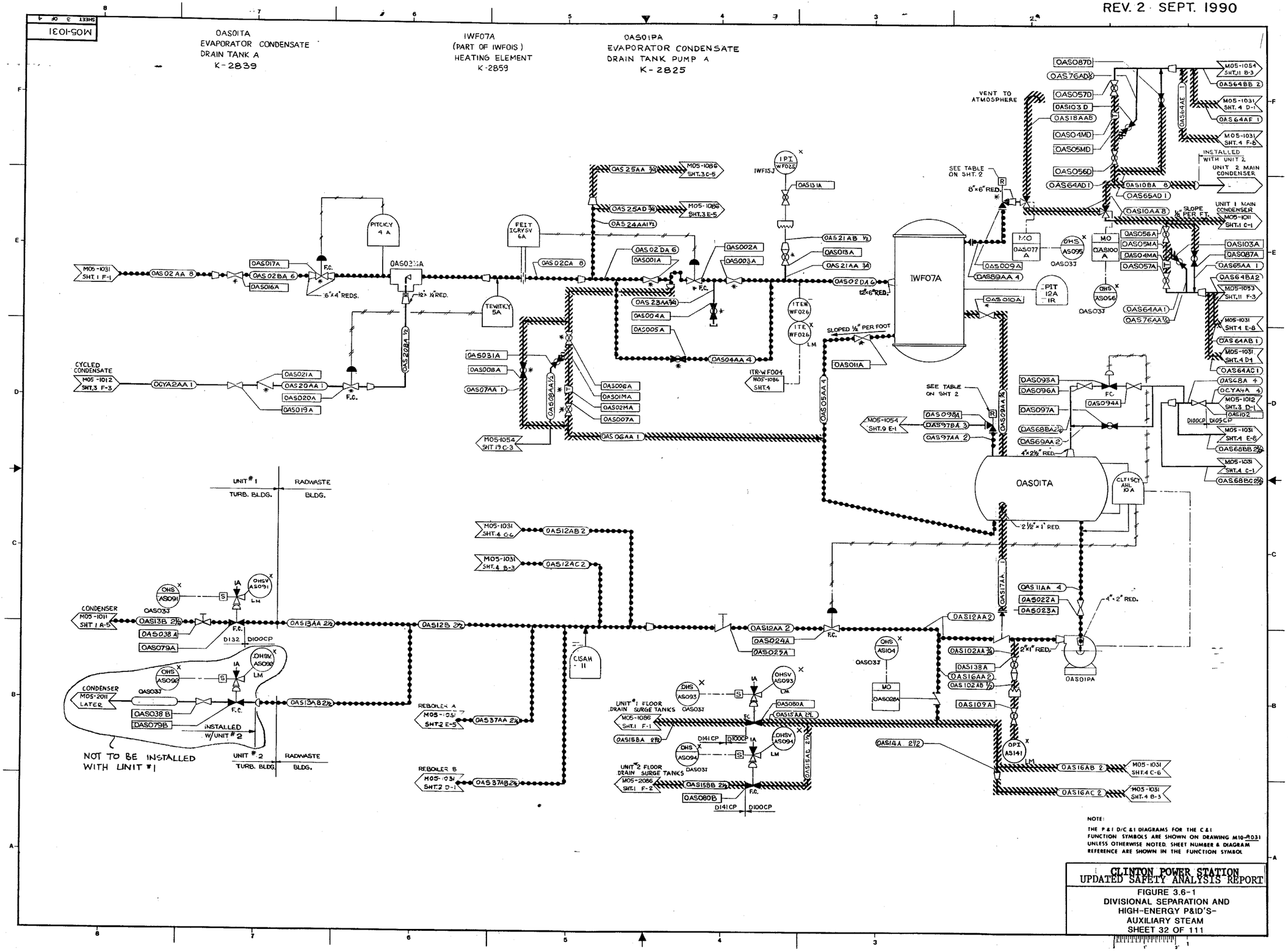

NOTE:
THE P&I D/C&I DIAGRAMS FOR THE C&I FUNCTION SYMBOLS ARE SHOWN ON DRAWING M10-R031 UNLESS OTHERWISE NOTED. SHEET NUMBER & DIAGRAM REFERENCE ARE SHOWN IN THE FUNCTION SYMBOL

CLINTON POWER STATION
UPDATED SAFETY ANALYSIS REPORT

FIGURE 3.6-1
DIVISIONAL SEPARATION AND HIGH-ENERGY P&ID'S-
AUXILIARY STEAM
SHEET 32 OF 111

REV. 2 SEPT. 1990

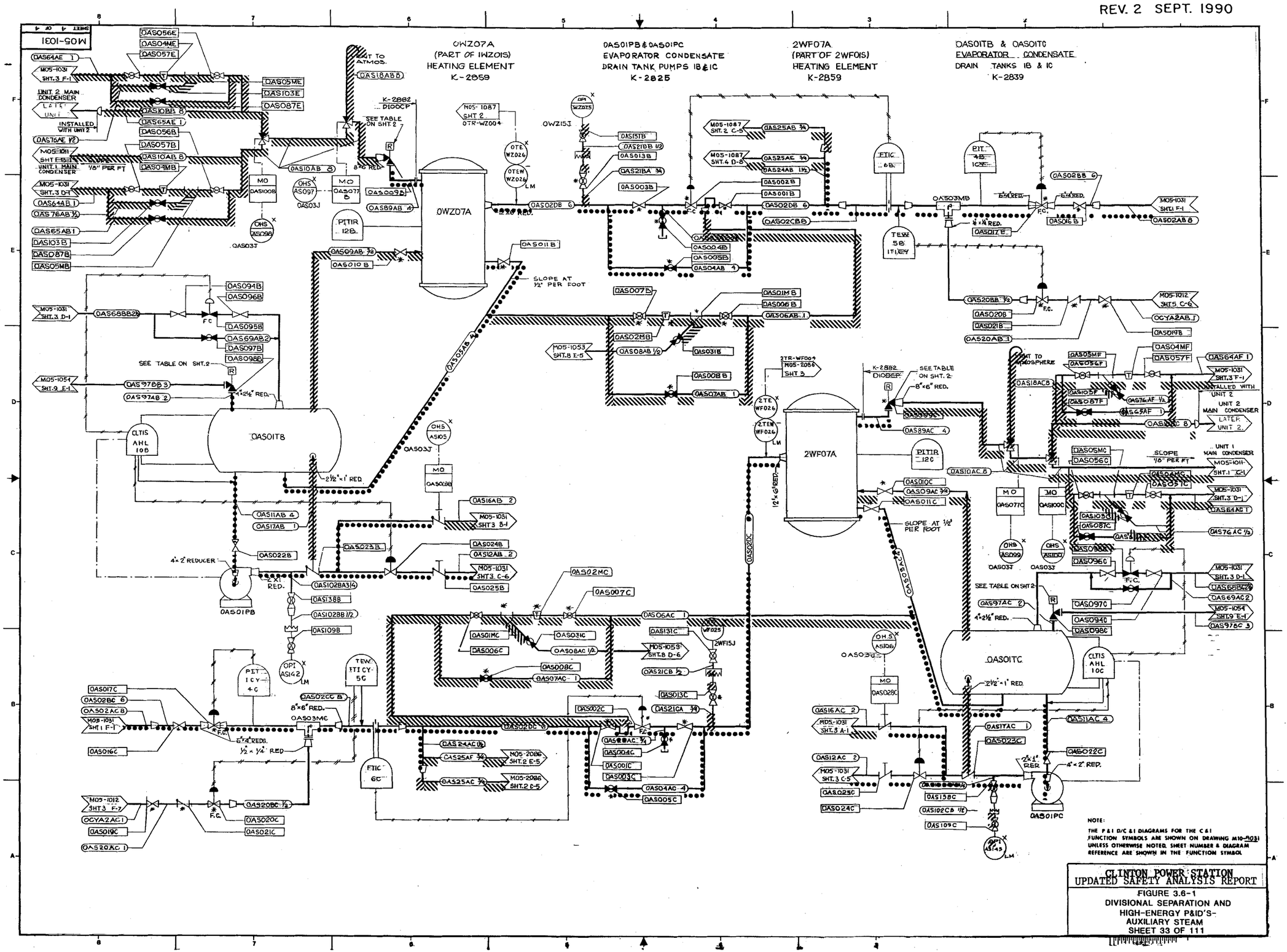

CLINTON POWER STATION
UPDATED SAFETY ANALYSIS REPORT

FIGURE 3.6-1
DIVISIONAL SEPARATION AND
HIGH-ENERGY P&ID'S-
AUXILIARY STEAM
SHEET 33 OF 111

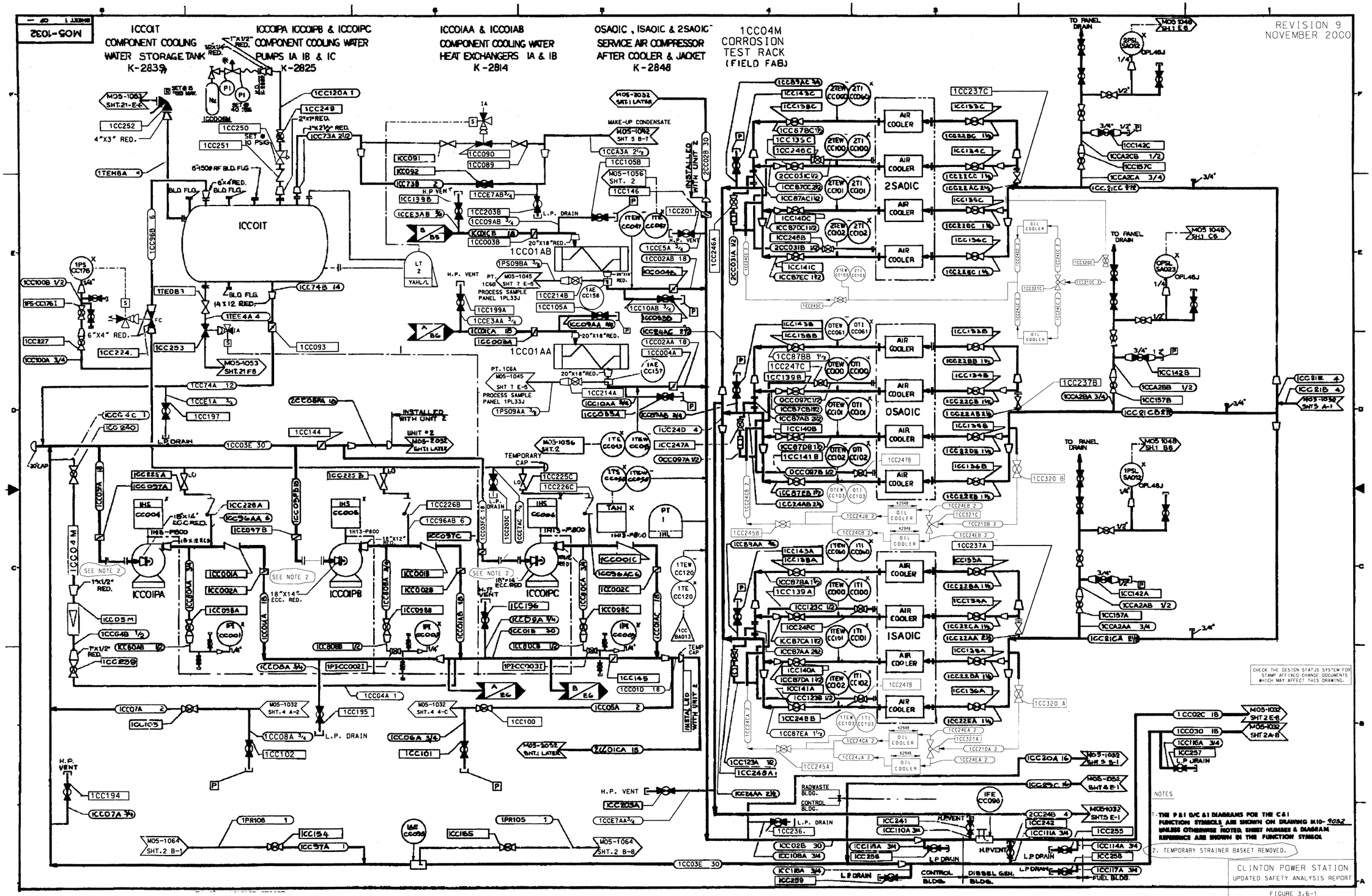
M05-1032
1CC01T
COMPONENT COOLING WATER STORAGE TANK K-2839
1CC01PA 1CC01PB & 1CC01PC
COMPONENT COOLING WATER PUMPS 1A 1B & 1C K-2825
1CC01AA & 1CC01AB
COMPONENT COOLING WATER HEAT EXCHANGERS 1A & 1B K-2814
0SA01C, 1SA01C & 2SA01C
SERVICE AIR COMPRESSOR AFTER COOLER & JACKET K-2848
1CC04M
CORROSION TEST RACK (FIELD FAB)
REVISION 9
NOVEMBER 2000
1CC01T
1CC01PA
1CC01PB
1CC01PC
1CC01AA
1CC01AB
2SA01C
0SA01C
1SA01C
MAKE-UP CONDENSATE
TO PANEL DRAIN
INSTALLED WITH UNIT 2
TEMPORARY CAP
SEE NOTE 2
CHECK THE DESIGN STATUS SYSTEM FOR STAMP AFFIXED CHANGE DOCUMENTS WHICH MAY AFFECT THIS DRAWING.
NOTES
1. THE P&I D/C &I DIAGRAMS FOR THE C&I FUNCTION SYMBOLS ARE SHOWN ON DRAWING M10-1032 UNLESS OTHERWISE NOTED. SHEET NUMBER & DIAGRAM REFERENCE ARE SHOWN IN THE FUNCTION SYMBOL
2. TEMPORARY STRAINER BASKET REMOVED.
CLINTON POWER STATION
UPDATED SAFETY ANALYSIS REPORT
FIGURE 3.6-1
DIVISIONAL SEPARATION AND HIGH-ENERGY P&ID'S - COMPONENT COOLING WATER SHEET 34 OF 111

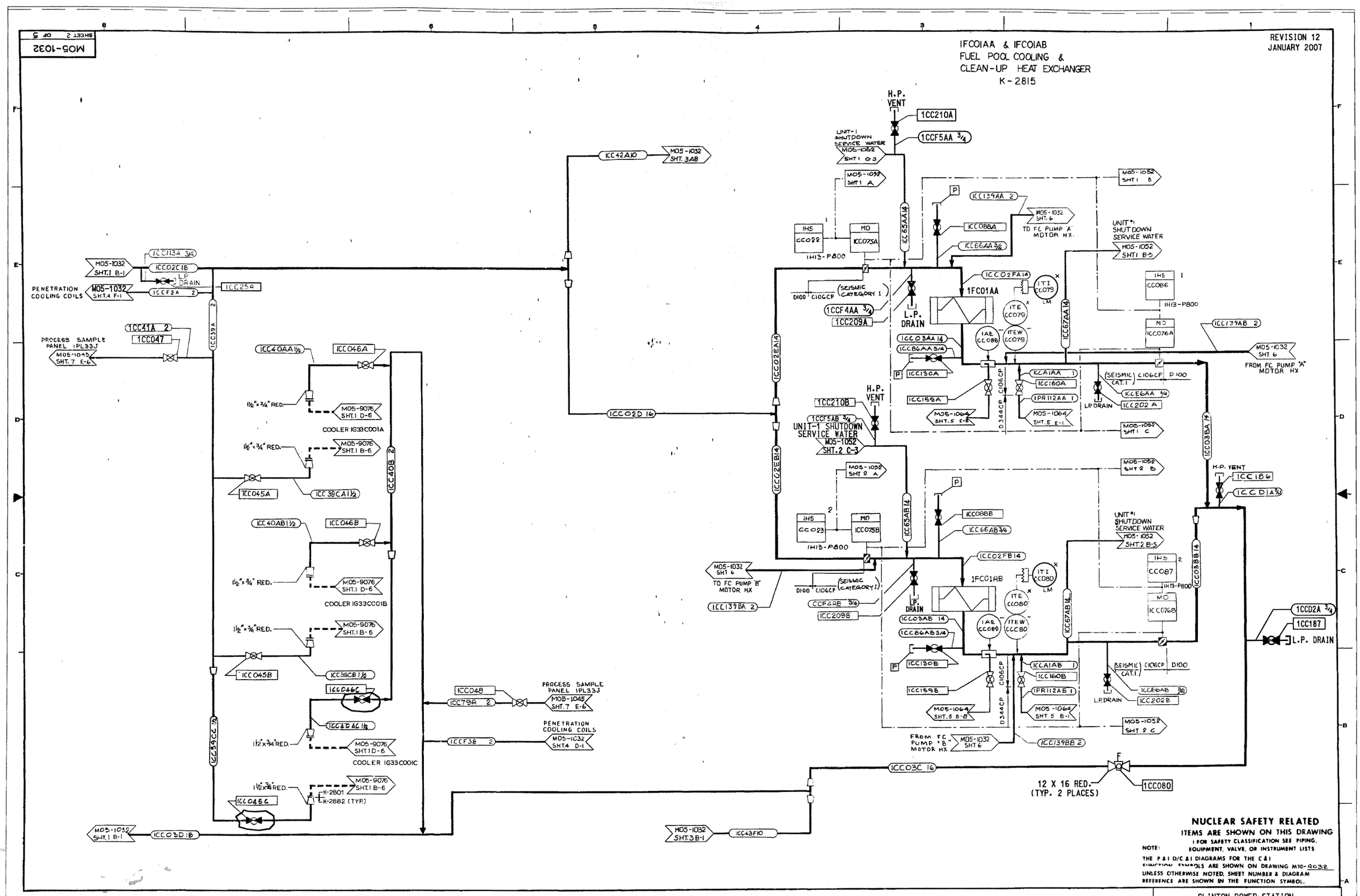

CLINTON POWER STATION
UPDATED SAFETY ANALYSIS REPORT

FIGURE 3.6-1
DIVISIONAL SEPARATION AND
HIGH-ENERGY P&ID'S-
COMPONENT COOLING WATER
SHEET 35 OF 111

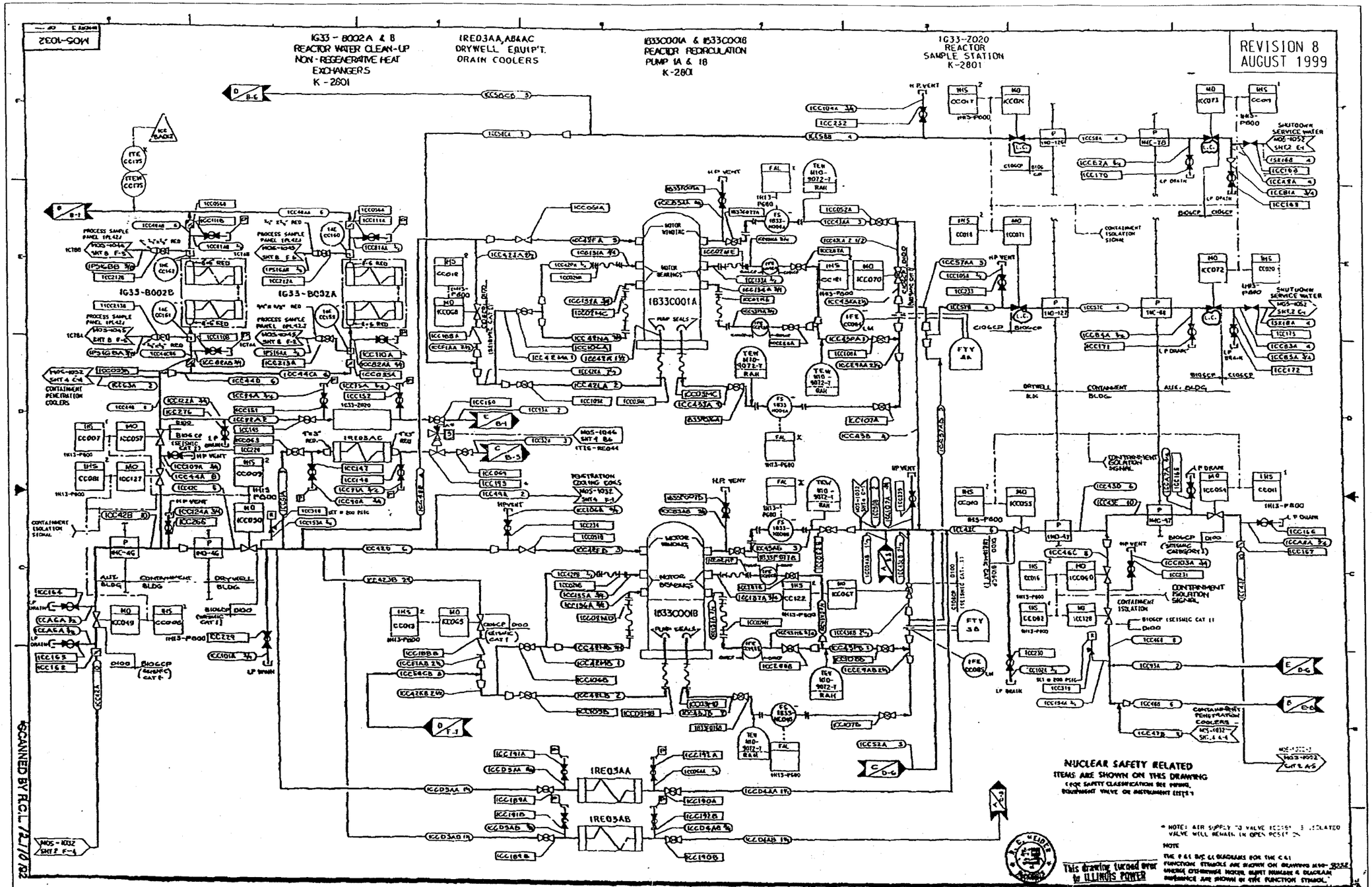

CLINTON POWER STATION
UPDATED SAFETY ANALYSIS REPORT

FIGURE 3.6-1
DIVISIONAL SEPARATION AND
HIGH-ENERGY P&ID'S-
COMPONENT COOLING WATER
SHEET 36 OF 111

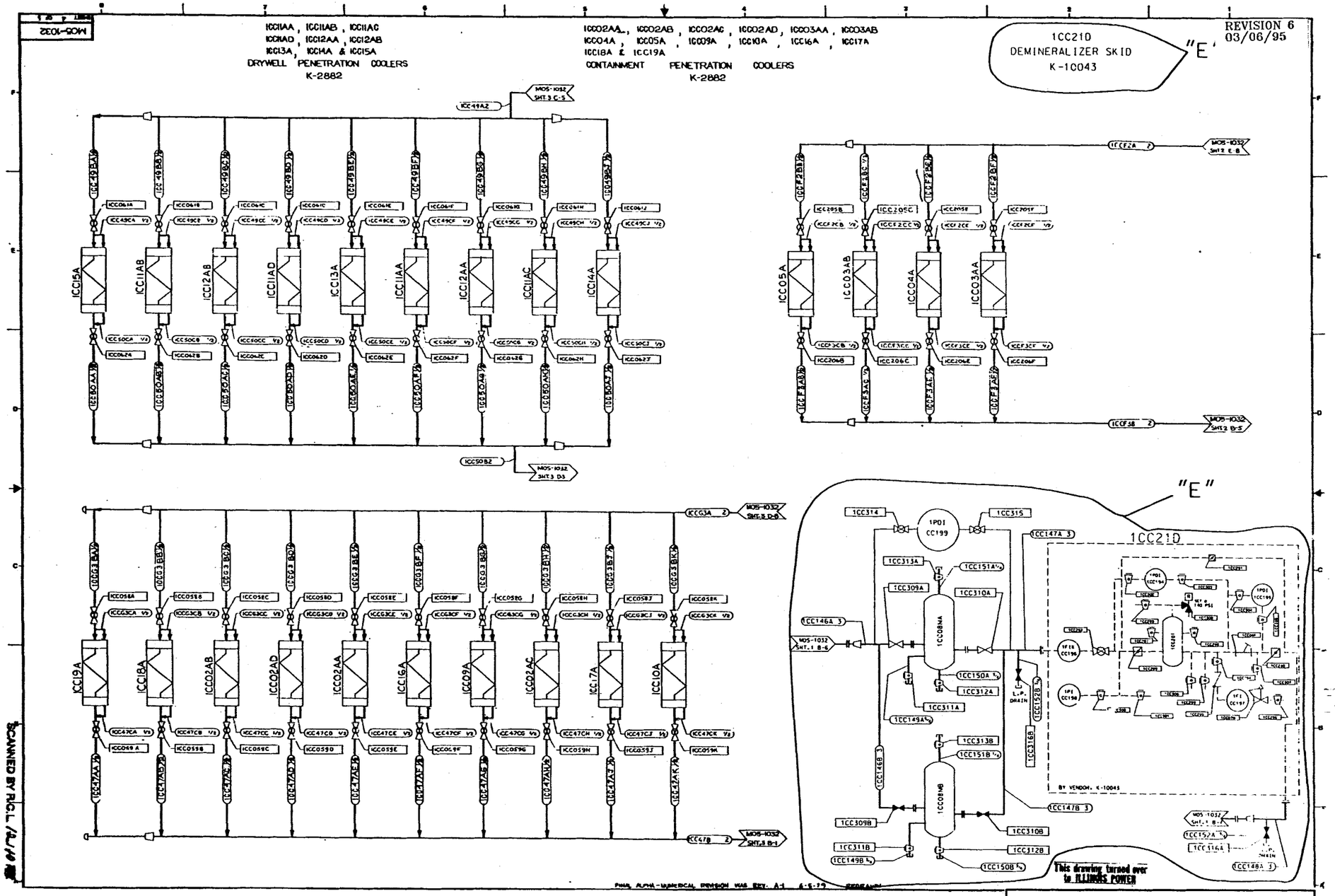

CLINTON POWER STATION
UPDATED SAFETY ANALYSIS REPORT

FIGURE 3.6-1

DIVISIONAL SEPARATION AND HIGH-ENERGY P&ID'S-COMPONENT COOLING WATER SHEET 37 OF 111

SCANNED BY R.C.L. 12/19/95

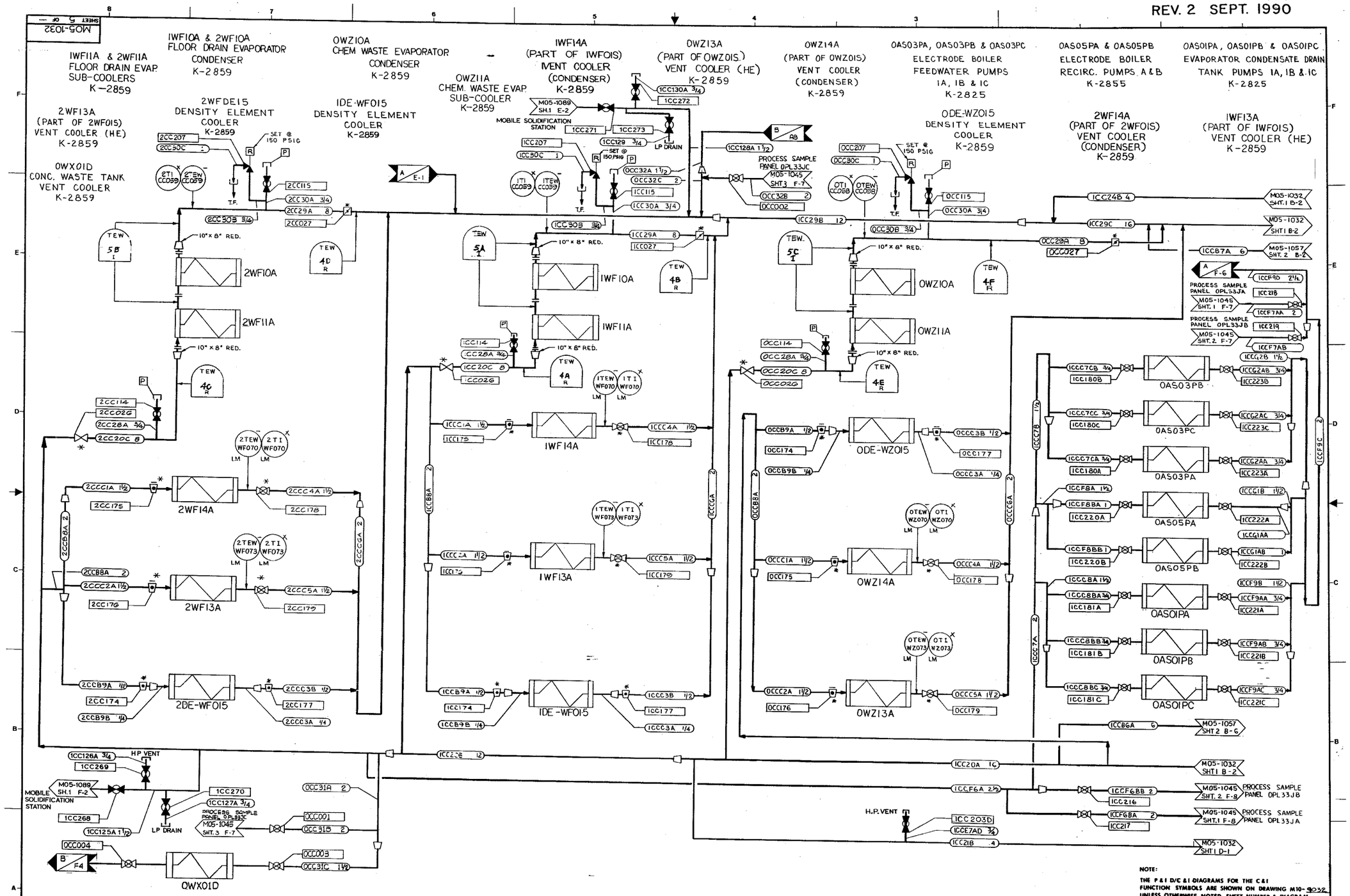

CLINTON POWER STATION
UPDATED SAFETY ANALYSIS REPORT

FIGURE 3.6-1
DIVISIONAL SEPARATION AND HIGH-ENERGY P&ID'S-COMPONENT COOLING WATER
SHEET 38 OF 111

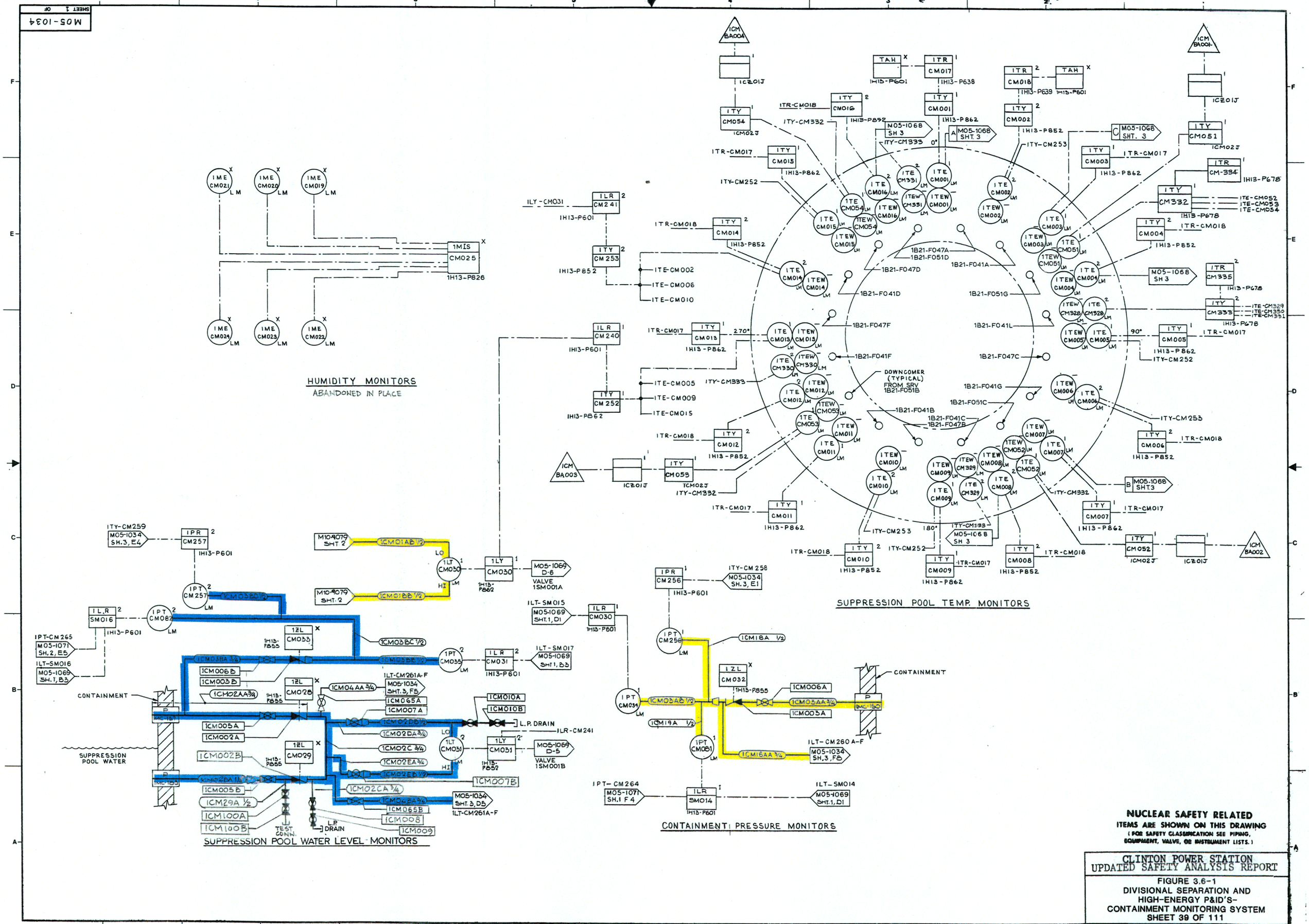

CLINTON POWER STATION
UPDATED SAFETY ANALYSIS REPORT

FIGURE 3.6-1
DIVISIONAL SEPARATION AND HIGH-ENERGY P&ID'S-
CONTAINMENT MONITORING SYSTEM
SHEET 39 OF 111

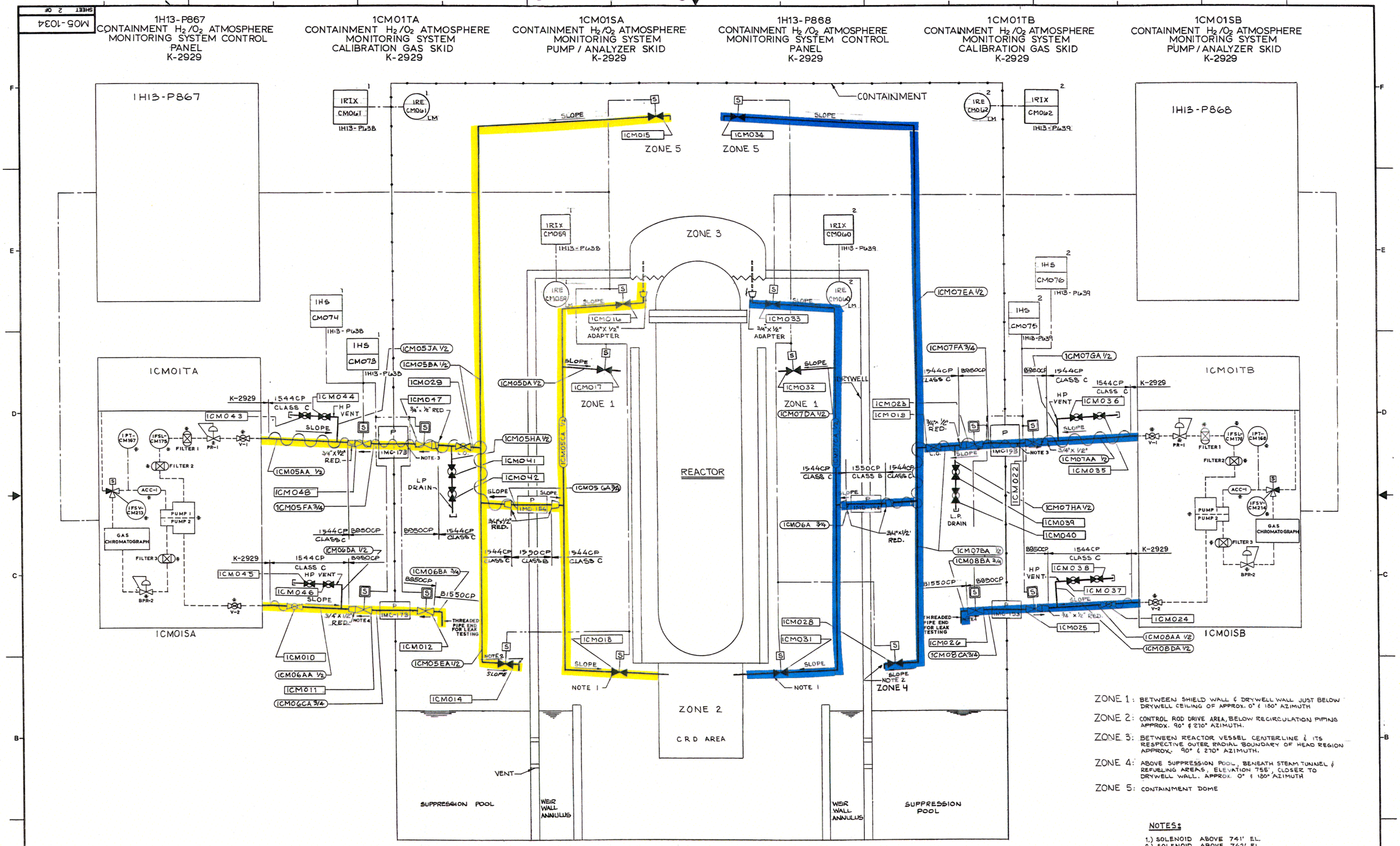

ZONE 1: BETWEEN SHIELD WALL & DRYWELL WALL JUST BELOW DRYWELL CEILING OF APPROX. 0° & 180° AZIMUTH

ZONE 2: CONTROL ROD DRIVE AREA, BELOW RECIRCULATION PIPING APPROX. 90° & 270° AZIMUTH.

ZONE 3: BETWEEN REACTOR VESSEL CENTERLINE & ITS RESPECTIVE OUTER RADIAL BOUNDARY OF HEAD REGION APPROX. 90° & 270° AZIMUTH.

ZONE 4: ABOVE SUPPRESSION POOL, BENEATH STEAM TUNNEL & REFUELING AREAS, ELEVATION 755', CLOSER TO DRYWELL WALL. APPROX. 0° & 180° AZIMUTH

ZONE 5: CONTAINMENT DOME

NOTES:

1.) SOLENOID ABOVE 741' EL.
2.) SOLENOID ABOVE 762' EL.
3.) PENETRATION IMC-153 & IMC-173, SAMPLE LINE MUST BE HEAT TRACED
4.) VALVES WITH —▶ TO BE INSTALLED TO PROHIBIT FLOW IN DIRECTION SHOWN WHEN CLOSED.

NUCLEAR SAFETY RELATED
ITEMS ARE SHOWN ON THIS DRAWING
(FOR SAFETY CLASSIFICATION SEE PIPING, EQUIPMENT, VALVE, OR INSTRUMENT LISTS.)

CLINTON POWER STATION
UPDATED SAFETY ANALYSIS REPORT

FIGURE 3.6-1
DIVISIONAL SEPARATION AND HIGH-ENERGY P&ID'S-
CONTAINMENT MONITORING SYSTEM
SHEET 40 OF 111

M05-1034 SHEET 2 OF

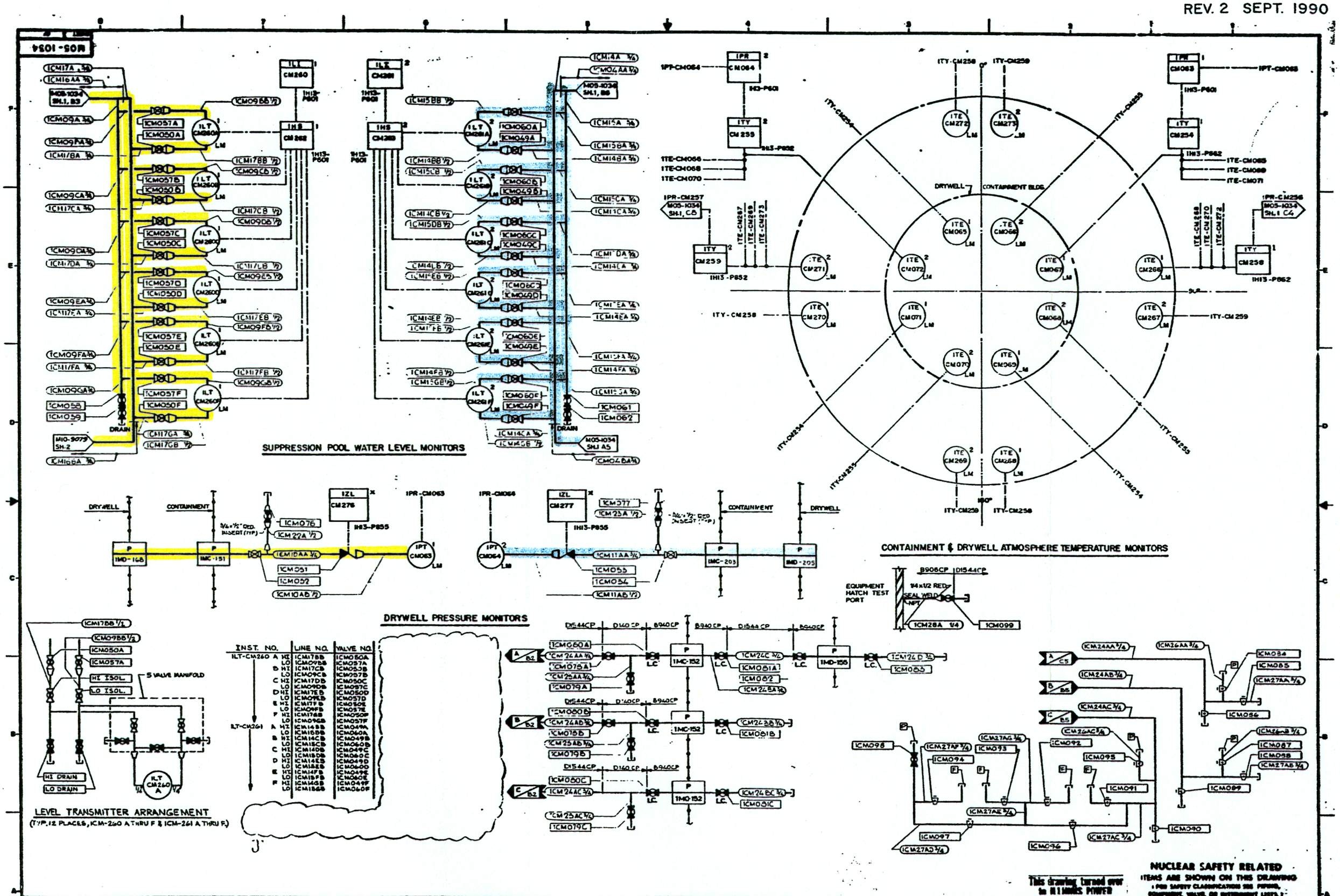

CLINTON POWER STATION
UPDATED SAFETY ANALYSIS REPORT

FIGURE 3.6-1
DIVISIONAL SEPARATION AND
HIGH-ENERGY P&ID'S-
CONTAINMENT MONITORING SYSTEM
SHEET 41 OF 111

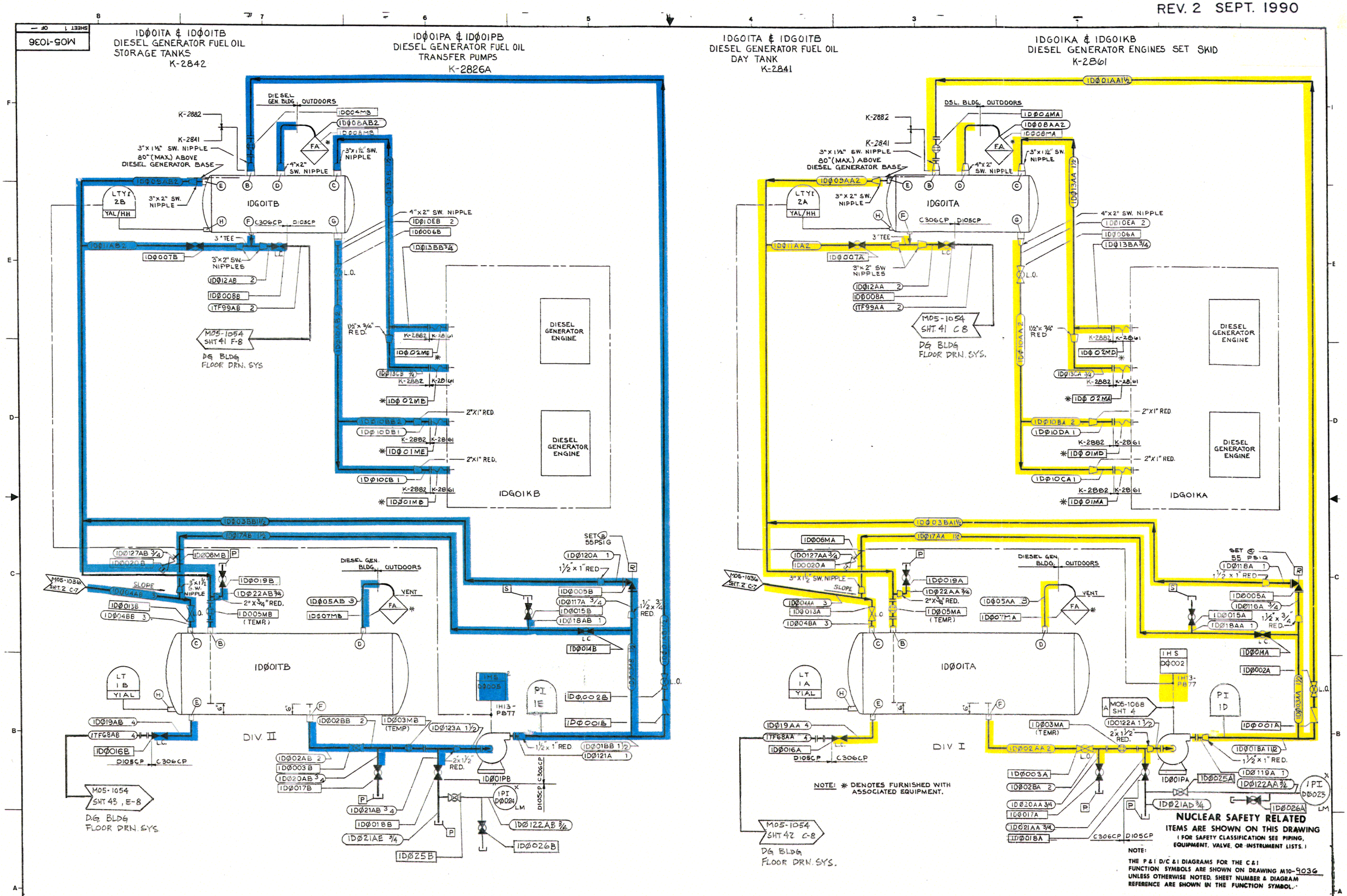

CLINTON POWER STATION
FINAL SAFETY ANALYSIS REPORT

FIGURE 3.6-1
DIVISIONAL SEPARATION AND
HIGH-ENERGY P&ID'S-
DIESEL GENERATOR FUEL OIL SYSTEM
SHEET 42 OF 111