Entergy

Entergy Operations, Inc.
1340 Echelon Parkway
Jackson, Mississippi 39213-8298
Tel 601-368-5758

F. G. Burford
Acting Director
Nuclear Safety & Licensing

CNRO-2007-00014

March 22, 2007

U. S. Nuclear Regulatory Commission
Attn.: Document Control Desk
Washington, DC 20555-0001

SUBJECT: Request for Alternative ANO1-R&R-010
Proposed Alternative to ASME Code Requirements for Weld Overlay Repairs

Arkansas Nuclear One, Unit 1
Docket No. 50-313
License No. DPR-51

REFERENCE: Entergy letter to the NRC dated March 6, 2007, *Request for Alternative ANO1-R&R-010 - Proposed Alternative to ASME Code Requirements for Weld Overlay Repairs*

Dear Sir or Madam:

By the referenced letter, Entergy Operations, Inc. (Entergy) submitted revised Request for Alternative ANO1-R&R-010. This request proposes an alternative to the requirements of ASME Code, Section XI IWA-4330 for mitigating primary water stress corrosion cracking (PWSCC) on pressurizer and surge line dissimilar metal welds at Arkansas Nuclear One, Unit 1 (ANO-1) using full structural weld overlays. In a telephone call on March 20, 2007, the staff informed Entergy that the post-weld heat treatment exemptions of ASME Section III should not be used and that the ambient temperature temperbead technique should be applied to each of six (6) dissimilar metal welds that join P-No. 8 or P-No. 43 austenitic materials with P-No. 1 ferritic material. Entergy has incorporated this approach into ANO1-R&R-010 (page 4 of 54), a revised version of which is contained in Enclosure 1. Changes are denoted via revision bars in the page margin.

Entergy is evaluating its original application of the post-weld heat treatment exemptions of ASME Section III NB-4620 to determine if additional basis can be provided to the staff for further consideration. Entergy may request the staff to reconsider its position regarding the application of the ambient temperature temperbead technique to the six welds.

This revised request supersedes in its entirety the previous version submitted via the referenced letter. In addition, this letter contains commitments identified in Enclosure 2, which supersede those commitments identified in the referenced letter.

A047

Entergy requests approval of ANO1-R&R-010 by April 1, 2007 to support the upcoming refueling outage at ANO-1. Should you have any questions regarding this request, please contact Guy Davant at (601) 368-5756.

Sincerely,

Guy H. Davant
for F. G. Burford

FGB/GHD/ghd

Enclosures: 1. Request for Alternative ANO1-R&R-010
2. Licensee-Identified Commitments

cc: Mr. W. A. Eaton (ECH)
Mr. J. S. Forbes (ECH)
Mr. T. G. Mitchell (ANO)

Dr. Bruce S. Mallett
Regional Administrator, Region IV
U. S. Nuclear Regulatory Commission
611 Ryan Plaza Drive, Suite 400
Arlington, TX 76011-8064

NRC Senior Resident Inspector
Arkansas Nuclear One
P.O. Box 310
London, AR 72847

U.S. Nuclear Regulatory Commission
Attn: Ms. F. E. Saba
MS O-8 B1
Washington, DC 20555-0001

ENTERGY OPERATIONS, INC.
ARKANSAS NUCLEAR ONE, UNIT 1
REQUEST FOR ALTERNATIVE
ANO1-R&R-010

I. COMPONENTS

Component / Number:	Pressurizer T1 Surge Line CCA-2-10" "A" Hot Leg CCA-1-36"
Description:	Pressurizer Nozzle Dissimilar Metal Welds (6) Hot Leg-to-Surge Line Nozzle Dissimilar Metal Weld (1)
Code Class:	1
References:	1. ASME Code, Section XI, 1992 Edition with portions of the 1993 Addenda as listed in Reference 6 2. ASME Section XI, 1995 Edition through 1996 Addenda is used for Appendix VIII, "Performance Demonstration for Ultrasonic Examinations, 3. ASME Section III, Subsection NB, 1965 Edition, Summer 1967 Addenda (Original Construction Code for Pressurizer) 4. USAS B31.7, 1968 Edition, June 1968 Errata (Original Construction Code for Surge Line and Hot Leg Piping) 5. ASME Section III, Subsection NB, 1989 Edition 6. CEP-ISI-002, *ANO-1 Inservice Inspection Plan* 7. EPRI Report 1011898, *Justification for the Removal of the 100 Square Inch Temperbead Weld Repair Limitation* 8. EPRI Report GC-111050, *Ambient Temperature Preheat for Machine GTAW Temperbead Applications* 9. EPRI Report 1006696, *Crack Growth Rates for Evaluating PWSCCC of Alloy 82, 182, and 132 Welds (MRP-115)* 10. ASME Code Case N-740 11. ASME Code Case N-504-2 12. ASME Code Case N-638-1 13. EPRI Report 101 3558, *Temper Bead Welding Applications – 48 hour Hold for Ambient Temperature Temper Bead Welding*
Unit / Inspection Interval:	Arkansas Nuclear One, Unit 1 (ANO-1) / Third (3rd) 10-Year Interval

II. CODE REQUIREMENTS

IWA-4170(b) requires that repairs and the installation of replacement items be performed in accordance with the Owner's Design Specification and the original Construction Code of the component or system. Alternatively, IWA-4170(b) allows for use of later Editions/Addenda of the Construction Code or ASME Section III. IWA-4300 and IWA-4500 provide defect removal and alternative welding methods when the requirements of IWA-4170(b) cannot be met. IWA-4800 requires the performance of preservice examinations based on IWB-2200 for Class 1 components. Table IWB-2500, Categories B-F and B-J, prescribes inservice inspection requirements for Class 1 butt welds. Appendix VIII, Supplement 11 of ASME Section XI specifies performance demonstration requirements for ultrasonic examination of weld overlays.

III. REASON FOR PROPOSED ALTERNATIVE

Primary water stress corrosion cracking (PWSCC) of Alloy 600 components and welds exposed to pressurized water reactor (PWR) primary coolant has become a growing concern in the nuclear industry over the past decade. In particular, dissimilar metal welds (DMWs) made with Nickel Alloy 82 and 182 weld metal exposed to elevated operating temperatures, such as pressurizer DMWs, are believed to pose a heightened propensity to PWSCC. Due to this concern, Entergy has concluded that the application of preemptive full structural weld overlays to the pressurizer DMWs is the most appropriate course of action to ensure Reactor Coolant System (RCS) pressure boundary integrity and improve future inspectability. Entergy also intends to apply a preemptive full structural weld overlay on the surge line-to-hot leg DMW.

Structural weld overlays have been used for several years on piping of both boiling water reactors (BWRs) and PWRs to arrest the growth of existing flaws while establishing a new structural pressure boundary. While this is the case, no evidence of PWSCC has been found in the subject pressurizer and surge line DMWs at ANO-1. However, PWSCC is difficult to detect except when the inspection is performed in accordance with the stringent requirements of ASME Section XI, Appendix VIII. The DMWs included in this request have been evaluated and do not meet the surface or geometric requirements of Appendix VIII. Therefore, inspection of these welds cannot be performed to Appendix VIII without modifying the weld geometry or configuration.

Currently, there are no generically accepted Code-approved criteria for a licensee to preemptively apply a full structural weld overlay to DMWs constructed of Alloy 82/182 weld material. Although ANO-1 performs repair/replacement activities in accordance with the 1992 Edition of ASME Section XI, this edition of ASME Section XI does not include requirements for application of a preemptive, full structural weld overlay. For that matter, preemptive, full structural weld overlay requirements are not presently included in any Edition/Addenda of ASME Section XI (including Code Cases) approved by the NRC.

Nozzle-to-safe end weld overlays have been applied as repairs to other plants in accordance with ASME Code Cases N-504-2 and N-638-1, which are "conditionally accepted" for use in Regulatory Guide 1.147. Application of these code cases to nozzle DMWs requires a series of relief requests since Code Case N-504-2 was written specifically for stainless steel pipe-to-pipe welds and Code Case N-638-1 contains some restrictions and requirements that are not applicable to weld overlays. Code Case N-740 has recently been approved by the ASME Code Committee to specifically

address weld overlays on DMWs. It also incorporates changes to the latest approved version of Code Case N-638 (i.e., N-638-3). However, Code Case N-740 does not specifically address preemptive weld overlays and has not yet been accepted by the NRC in Regulatory Guide 1.147.

This request for alternative is specific to the seven (7) DMWs described below. These welds are associated with the ANO-1 pressurizer and surge line.

- Pressurizer Nozzle to Spray Line [two (2) welds]

  The pressurizer nozzle is carbon steel (P-No. 1) welded to an Inconel 600 (P-No. 43) safe end, which is, in turn, welded to stainless steel (P-No. 8) pipe. The welds joining the nozzle to safe end and safe end to pipe are 82/182 DMWs. Because of the close proximity of the two (2) DMWs, a single weld overlay will be installed across both welds. See Attachment 1 for additional details.

- Pressurizer Nozzle to Safety Valve – [two (2) locations]

  There are two (2) pressurizer safety valves. The pressurizer nozzles, which are carbon steel (P-No. 1), are welded to stainless steel (P-No. 8) flanges. The welds joining the nozzles to the flanges are 82/182 DMWs. See Attachment 1 for additional details.

- Pressurizer Nozzle to Electromatic Relief Valve (ERV)

  The pressurizer nozzle, which is carbon steel (P-No. 1), is welded to a stainless steel (P-No. 8) flange. The weld joining the nozzle to the flange is an 82/182 DMW. See Attachment 1 for additional details.

- Pressurizer Nozzle to Surge Line

  The pressurizer nozzle, which is carbon steel (P-No. 1), is welded to a stainless steel (P-No. 8) safe end. The weld joining the nozzle to the safe end is an 82/182 DMW. See Attachment 1 for additional details.

- Hot Leg to Surge Line

  The hot leg nozzle, which is carbon steel (P-No. 1), is welded to stainless steel (P-No. 8) piping. The weld joining the nozzle to the piping is an 82/182 DMW. See Attachment 1 for additional details.

A preemptive full structural weld overlay is proposed for each of the above DWM locations. The full structural weld overlays will be applied by deposition of Alloy 52M (ENiCrFe-7A) weld metal on the outside surface of the DMWs and adjacent base materials.

IV. PROPOSED ALTERNATIVE

Pursuant to 10 CFR 50.55a(a)(3)(i), Entergy Operations, Inc. (Entergy) proposes the following as alternatives to the Code requirements specified in Section II above. The proposed alternatives are applicable to the seven (7) DMWs identified in Section III above.

A. Install preemptive full structural weld overlays in accordance with the proposed alternatives specified in Attachments 2 and 3. These alternatives are based on the methodology of ASME Section XI Code Case N-740.

- Attachment 2 specifies an alternative applicable to the design, fabrication, examination, pressure testing, and inservice inspection of preemptive full structural weld overlays.

- Attachment 3 specifies an alternative applicable to ambient temperature temperbead welding. Attachment 3 will be applied to the six (6) DMWs identified in Section III, above, that join P-No. 8 or P-No. 43 austenitic materials with P-No. 1 ferritic material as an alternative to the post-weld heat treatment requirements of ASME Section III.

B. Perform ultrasonic examinations of the proposed preemptive full structural weld overlays in accordance with Appendix VIII, Supplement 11 of the 1995 Edition/1996 Addenda of ASME Section XI accept as modified by the Performance Demonstration Initiative (PDI) Program. The proposed PDI alternatives to Appendix VIII, Supplement 11 are specified in Attachment 6.

V. BASIS FOR PROPOSED ALTERNATIVE

A. Proposed Alternative for Preemptive Structural Weld Overlays

Entergy intends to install preemptive full structural weld overlays to the seven (7) DMWs (Inconel 82/182) identified in Section III of this request in accordance with proposed alternative of Attachment 2. A tabular comparison of the proposed alternative of Attachment 2 with Code Case N-504-2 and Appendix Q of ASME Section XI has been performed and is provided in Attachment 4.

NOTE

ASME Code Case N-504-2 has been conditionally approved by the NRC in Regulatory Guide 1.147 with the condition that the provisions of ASME Section XI, Appendix Q be met when using the Case.

This proposed alternative provides an acceptable methodology for preventing potential failures due to PWSCC based on the use of filler metals that are resistant to PWSCC (e.g., Alloy 52M), procedures that create compressive residual stress profiles in the original weld, and post-overlay preservice and inservice inspection requirements that ensure structural integrity for the life of the plant. The proposed weld overlays will also meet the applicable stress limits from ASME Section III. Crack growth evaluations for PWSCC and fatigue of any conservatively postulated flaws will demonstrate that structural integrity will be maintained.

Please note that as stated above, preemptive weld overlays will be installed using Alloy 52M filler metal in accordance with Attachment 2. However, Alloy 52M weld metal has demonstrated sensitivity to certain impurities, such as sulfur, when deposited onto austenitic stainless steel base materials. Therefore, should this condition exist, a butter (transitional) layer of authentic stainless steel filler metal will be applied across the austenitic stainless steel base material. The austenitic stainless steel butter layer will not be included in the structural weld overlay thickness as defined in Attachment 2.

1. Weld Overlay Design and Verification

The fundamental design basis for full structural weld overlays is to maintain the original design margins with no credit taken for the underlying PWSCC-susceptible weldments. The assumed design basis flaw for the purpose of structural sizing the weld overlays is 360° and 100% through the original wall thickness of the DMWs. Regarding the crack growth analysis for the preemptive full structural weld overlay, a flaw originating from the inside diameter with a depth of 75% and a circumference of 360° will be assumed. A 75% through-wall flaw is the largest flaw that could remain undetected. A preservice volumetric examination will be performed after application of the weld overlay using an ASME Section XI, Appendix VIII (as implemented through PDI) examination procedure. This examination will verify that there is no cracking in the upper 25% of the original weld and base material. The preservice examination will also demonstrate that the assumption of a 75% through-wall crack is conservative. However, if any crack-like flaws are identified in the upper 25% of the original weld or base material by the preservice examination, then the as-found flaw (postulated 75% through-wall flaw plus the portion of the flaw in the upper 25%) will be used in the crack growth analysis.

The specific analyses and verifications to be performed are summarized below.

- Nozzle-specific stress analyses will be performed to establish a residual stress profile in each nozzle. Severe internal diameter weld repairs will be assumed in these analyses that effectively bound any actual weld repairs that may have occurred in the nozzles. The analyses will then simulate application of the weld overlays to determine the final residual stress profiles. Post-weld overlay residual stresses at normal operating conditions will be shown to result in beneficial compressive stresses on the inside surface of the components, assuring that further crack initiation due to PWSCC is highly unlikely.

- Fracture mechanics analyses will also be performed to predict crack growth for postulated flaws. Crack growth due to PWSCC and fatigue will be analyzed for the original DMW. The crack growth analyses will consider all design loads and transients, plus the post-weld overlay and through-wall residual stress distributions. It will demonstrate that the postulated cracks will not grow beyond the design basis for the weld overlays.

- The analyses will demonstrate that applying the weld overlays does not impact the conclusions of the existing nozzle stress reports. The ASME Code, Section III stress and fatigue criteria will be met for regions of the overlays remote from assumed cracks.

- Shrinkage will be measured during the overlay application. Shrinkage stresses at other locations in the piping systems arising from the weld overlays will be demonstrated not to have an adverse effect on the systems. Clearances of affected support and restraints will be checked after the overlay repair, and will be reset within the design ranges as required.

- The total added weight on the piping systems due to the overlays will be evaluated for potential impact on piping system stresses and dynamic characteristics.

- The as-built dimensions of the weld overlays will be measured and evaluated to demonstrate that they meet or exceed the minimum design dimensions of the overlays.

2. Suitability of Proposed Ambient Temperature Temperbead Technique

An ambient temperature temperbead welding technique will be used when welding on the ferritic base materials of the nozzles in lieu of the post-weld heat treatment requirements of ASME Section III. Research by the Electric Power Research Institute (EPRI) and other organizations on the use of an ambient temperature temperbead process using the machine gas tungsten arc welding (GTAW) process is documented in EPRI Report GC-111050 (Ref. 8). According to the EPRI report, repair welds performed with an ambient temperature temperbead procedure utilizing the machine GTAW welding process exhibit mechanical properties equivalent to or better than those of the surrounding base material. Laboratory testing, analysis, successful procedure qualifications, and successful repairs have all demonstrated the effectiveness of this process.

a. Suitability of Ambient Temperature Temperbead Welding

The effects of the ambient temperature temperbead welding process of Attachment 3 on mechanical properties of welds, hydrogen cracking, and cold restraint cracking are addressed in the following paragraphs:

- Mechanical Properties

The principal reasons to preheat a component prior to repair welding is to minimize the potential for cold cracking. The two cold cracking mechanisms are hydrogen cracking and restraint cracking. Both of these mechanisms occur at ambient temperature. Preheating slows down the cooling rate resulting in a ductile, less brittle microstructure thereby lowering susceptibility to cold cracking. Preheat also increases the diffusion rate of monatomic hydrogen that may have been trapped in the weld during solidification.

As an alternative to preheat, the ambient temperature temperbead welding process utilizes the tempering action of the welding procedure to produce tough and ductile microstructures. Because precision bead placement and heat input control are utilized in the machine GTAW process, effective tempering of weld heat affected zones (HAZ) is possible without applying preheat. According to Section 2-1 of EPRI Report GC-111050, "the temperbead process is carefully designed and controlled such that successive weld beads supply the appropriate quantity of heat to the untempered HAZ such that the desired degree of carbide precipitation (tempering) is achieved. The resulting microstructure is very tough and ductile."

The IWA-4530 temperbead process also includes a post-weld soak requirement. Performed at 450°F - 550°F for 2 hours (P-No. 1 base materials), this post-weld soak assists diffusion of any remaining hydrogen from the repair weld. As such, the post-weld soak is a hydrogen bake-out and not a post-weld heat treatment as defined by the ASME Code. At 450°F - 550°F, the post-weld soak does not stress relieve, temper, or alter the mechanical properties of the weldment in any manner.

The alternative in Attachment 3 establishes detailed welding procedure qualification requirements for base materials, filler metals, restraint, impact properties, and other procedure variables. The qualification requirements contained in Attachment 3 provide assurance that the mechanical properties of repair welds will be equivalent to or superior to those of the surrounding base material.

- <u>Hydrogen Cracking</u>

Hydrogen cracking is a form of cold cracking. It is produced by the action of internal tensile stresses acting on low toughness HAZs. The internal stresses are produced from localized build-ups of monatomic hydrogen. Monatomic hydrogen forms when moisture or hydrocarbons interact with the welding arc and molten weld pool. The monatomic hydrogen can be entrapped during weld solidification and tends to migrate to transformation boundaries or other microstructure defect locations. As concentrations build, the monatomic hydrogen will recombine to form molecular hydrogen, thus generating localized internal stresses at these internal defect locations. If these stresses exceed the fracture toughness of the material, hydrogen-induced cracking will occur. This form of cracking requires the presence of hydrogen and low toughness materials. It is manifested by intergranular cracking of susceptible materials and normally occurs within 48 hours of welding.

IWA-4500 establishes elevated preheat and post-weld soak requirements. The elevated preheat temperature of 300°F increases the diffusion rate of hydrogen from the weld. The post-weld soak at 450°F was also established to bake-out or facilitate diffusion of any remaining hydrogen from the weldment. However, while hydrogen

cracking is a concern for shielded metal arc welding (SMAW), which uses flux covered electrodes, the potential for hydrogen cracking is significantly reduced when using the machine GTAW welding process.

The machine GTAW welding process is inherently free of hydrogen. Unlike the filler used in the SMAW process, GTAW welding filler metals do not rely on flux coverings, which may be susceptible to moisture absorption from the environment. Conversely, the GTAW process utilizes dry inert shielding gases that cover the molten weld pool from oxidizing atmospheres. Any moisture on the surface of the component being welded will be vaporized ahead of the welding torch. The vapor is prevented from being mixed with the molten weld pool by the inert shielding gas that blows the vapor away before it can be mixed. Furthermore, modern filler metal manufacturers produce wires having very low residual hydrogen. This is important because filler metals and base materials are the most realistic sources of hydrogen for automatic or machine GTAW temperbead welding. Therefore, the potential for hydrogen-induced cracking is greatly reduced by using the machine GTAW process.

In the unlikely case that hydrogen cracking occurs, nondestructive examination (NDE) of the weldment will be performed after the weldment has been at ambient temperature for 48 hours, thereby providing assurance that the cracking would be identified.

- Cold Restraint Cracking

  Cold cracking generally occurs during cooling at temperatures approaching ambient temperature. As stresses build under a high degree of restraint, cracking may occur at defect locations. Brittle microstructures with low ductility are subject to cold restraint cracking. However, the ambient temperature temperbead process is designed to provide a sufficient heat inventory so as to produce the desired tempering for high toughness. Because the machine GTAW temperbead process provides precision bead placement and control of heat, the toughness and ductility of the HAZ will typically be superior to the base material. Therefore, the resulting structure will be appropriately tempered to exhibit toughness sufficient to resist cold cracking.

b. Exceptions to ASME Code Case N-638-1 Conditions

The ambient temperature temperbead technique of Code Case N-638-1 was conditionally approved by the NRC in Regulatory Guide 1.147. The proposed ambient temperature temperbead welding technique of Attachment 3 is identical to Code Case N-638-1 with the following exceptions:

- Code Case N-638-1, paragraph 1.0(a) limits the maximum area of an individual weld to 100 square inches. The proposed alternative limits the surface area to 300 square inches. The technical basis for this change is provided in Attachment 5.

- Code Case N-638-1, paragraph 1.0(a) states that "the depth of the weld shall not be greater than one-half of the ferritic base metal thickness". Because the proposed alternative applies to deposition of weld overlays for which there are no weld or base material excavations, this limitation does not apply and is not included in Attachment 3.

- When welding is to be performed in a pressurized environment (e.g., an enclosed environment that is pressurized to prevent leakage so that welding can be performed), Code Case N-638-1, paragraph 2.1(b) requires that the pressurized environment be duplicated in the procedure qualification test assembly. Because this condition does not exist when applying weld overlays in the request, this requirement is not included in Attachment 3.

- When welding is performed in the core beltline region of the reactor pressure vessel, Code Case N-638-1, paragraph 2.1(c) requires that the effects of irradiation on the properties of the materials be considered. Because weld overlays will not be applied to the core beltline region of the reactor pressure vessel, this requirement is not included in Attachment 3.

- Code Case N-638-1, paragraph 2.1(h) requires the performance of Charpy V-notch testing of the <u>ferritic</u> weld metal of the procedure qualification test coupon. Because <u>austenitic</u> weld metal (i.e., Inconel Alloy 52 "Modified") will be used to fabricate the proposed weld overlays, this requirement does not apply and is not included in Attachment 3.

- Code Case N-638-1, paragraph 2.1(j) specifies acceptance criteria for Charpy V-notch tests of the HAZ. According to paragraph 2.1(j), the "average values of the three HAZ impact tests shall be equal to or greater than the average values of the three unaffected base metal tests". Although not explicitly stated, the average values referred to in paragraph 2.1(j) are the *average lateral expansion values* of the HAZ and base material specimens. Because this is the case, the acceptance criteria for Charpy V-notch testing of the HAZ is also based on *average lateral expansion values* in the proposed alternative. The technical basis for this change is provided in Attachment 5.

- Code Case N-638-1, paragraph 3.0(c) requires the deposition and removal of at least one weld reinforcement layer for "similar materials" (i.e., ferritic materials). This requirement is <u>only</u> applicable when welding is performed using ferritic filler weld metal. When temperbead welding is performed with ferritic filler metal, each ferritic

weld layer must be tempered by the heat supplied from a subsequent weld layer. Because the last layer of a weld or weld repair would be untempered without the deposition of one additional weld layer, paragraph 3.0(c) requires the deposition and removal of a reinforcement layer to provide the required tempering. Since only austenitic filler metal (i.e., Alloy 52M) will be used to fabricate the proposed weld overlays, depositing and removing a weld reinforcement layer is not required. Therefore, this requirement is not included into Attachment 3.

- Code Case N-638-1, paragraph 3.0 does not specifically address monitoring or verification of welding interpass temperatures. Because this is the case, interpass temperature controls are specified in Attachment 3. The proposed interpass temperature controls are based on field experience with depositing weld overlays. Interpass temperature beyond the third layer has no impact on the metallurgical properties of the low alloy steel HAZ.

- As an alternative to the examination requirements of Section 4.0 of Code Case N-638-1, the weld overlay will be examined in accordance with the examination and inspection requirements of Attachment 2, Section 3.0. The suitability of the proposed examinations is described in Section V.A.3, below.

3. Suitability of Proposed NDE

The length, surface finish, and flatness requirements of the weld overlay will be specified in the design to provide for examination volume of the weld overlay as shown in Attachment 2, Figures 1 and 2. Furthermore, the examinations and inspections specified in this proposed alternative will provide adequate assurance of structural integrity for the following reasons:

a. Weld overlays have been used for repair and mitigation of cracking in BWRs since the early 1980s. In Generic Letter 88-01, *NRC Position on Intergranular Stress Corrosion Cracking (IGSCC) in BWR Austenitic Stainless Steel Piping*, the NRC approved the use of Section XI acceptance standards for determining the acceptability of installed weld overlays.

b. The ultrasonic examinations performed in accordance with the proposed alternative are in accordance with ASME Section XI, Appendix VIII, Supplement 11 as implemented through the PDI. These examinations are considered more sensitive for detecting fabrication and service-induced flaws than the ASME Section III radiographic or ultrasonic examination methods. Furthermore, construction-type flaws have been included in the PDI qualification sample sets for evaluating procedures and personnel.

c. Per Section 3.0(a)(3) of Attachment 2, any planar flaws found during either the acceptance or preservice examination are required to meet the requirements of Table IWB-3514-2. This approach was previously determined to be acceptable in the NRC Safety Evaluation Report (SER) dated July 21, 2004 for Three Mile Island, Unit 1. However, within the

same SER, the NRC had issues regarding the application of Table IWB-3514-3 to laminar flaws in a weld overlay. The SER stated, "Applying Table IWB-3514-3 to a weld overlay exposes several inherent oversights. For instance, the acceptance of a laminar flaw size is independent of the weld overlay size, and the acceptance criteria are silent on the inaccessible volume beneath the lamination which may hide other flaws beneath the lamination." These issues are addressed, as follows:

- Per Section 3.0(a)(3)(i) of Attachment 2, Table IWB-3514-3 has been restricted so that the total laminar flaw shall not exceed 10% of the weld surface area and no linear dimension of the laminar flaw shall exceed 3 inches.

- Per Section 3.0(a)(3)(ii) of Attachment 2, the reduction in coverage due to laminar flaws shall be less than 10%. The dimensions of the un-inspectable volume are based on the coverage obtained by angle beam examinations of the weld overlay.

- Per Section 3.0(a)(3)(iii) of Attachment 2, any un-inspectable volume in the weld overlay shall be assumed to contain the largest radial planar flaw that could exist within that volume. This assumed flaw shall meet the inservice examination standards of Table IWB-3514-2. Alternately, the assumed flaw shall be evaluated and meet the requirements of IWB-3640. Both axial and circumferential planar flaws shall be assumed.

d. Weld overlays for repair of cracks in piping are not addressed by ASME Section III. Section III utilizes NDE procedures and techniques with flaw detection capabilities that are well within the practical limits of workmanship standards for welds. These standards are most applicable to volumetric examinations conducted by radiographic examination. Radiography (RT) of weld overlays is not appropriate because of the potential for radioactive material in the Reactor Coolant System and water in piping and components. Section III acceptance standards are written for a range of fabrication flaws including lack of fusion, incomplete penetration, cracking, slag inclusions, porosity, and concavity. However, experience and fracture mechanics have demonstrated that many of the flaws that are rejected using Section III acceptance standards do not have a significant effect on the structural integrity of the component. Furthermore, utilizing ASME Section III acceptance standards on weld overlays would be inconsistent with years of NRC precedence and is without justification given the evidence of past NRC approvals and operating experience.

e. Regarding hydrogen cracking concerns, NDE required by paragraphs 3.0(a)(2) and 3.0(a)(3) of Attachment 2 is more than capable of detecting hydrogen cracking in ferritic materials. First of all, if hydrogen cracking were to occur, it would occur in the HAZ of the ferritic base material either below or immediately adjacent to the weld overlay. Therefore, it is unnecessary to examine the entire 1.5T band defined in paragraph 1.0(e) of Attachment 3. Hydrogen cracking is not a concern in austenitic

materials. If it occurs in the ferritic base material below the weld overlay, it will be detected by the ultrasonic examination which will interrogate the entire weld overlay including the interface and HAZ beneath the weld overlay. If it occurs in the ferritic base material immediately adjacent to the weld overlay, it will be detected by the liquid penetrant examination which is performed at least ½ inch on each side of the weld overlay. Finally, when ambient temperature temperbead welding is performed over ferritic materials, the liquid penetrant and ultrasonic examinations will not be performed until at least 48 hours after completing of the third layer of the weld overlay. Technical justification for initiating the 48 hour hold after completing the third layer is provided in paragraph V.A.3.f.

f. Based on Code Case N-740, the 48-hour hold for performing NDE starts after the weld overlay cools to ambient temperature when performing ambient temperature temperbead welding. This 48-hour hold is specified to allow sufficient time for hydrogen cracking to occur (if it is to occur) in the HAZ of ferritic materials prior to performing final NDE. However, based on extensive research and industry experience, the Energy Power Research Institute (EPRI) has provided a technical basis for starting the 48-hour hold after completing the third temperbead weld layer rather than waiting for the weld overlay to cool to ambient temperature. (Weld layers beyond the third layer are not designed to provide tempering to the ferritic HAZ when performing ambient temperature temperbead welding.) EPRI has documented their technical basis in technical report 1013558, *Temper Bead Welding Applications – 48 Hour Hold Requirements for Ambient Temperature Temper Bead Welding* (Ref. 13). Although the technical data provided by EPRI in their report is based on testing performed on SA-508, Class 2 low alloy steels and other P-Number 3, Group 3 materials, the conclusions are bounding and applicable to P-Number 1 materials such as SA-508, Class 1 which have a lower carbon equivalent and lower hardenability. This point is important because the ANO-1 Pressurizer nozzles are manufactured from SA-508, Class 1 carbon steel. After evaluating the issues relevant to hydrogen cracking such as microstructure of susceptible materials, availability of hydrogen, applied stresses, temperature, and diffusivity and solubility of hydrogen in steels, EPRI concluded the following on page 5-2 of the report: "There appears to be no technical basis for waiting 48 hours after cooling to ambient temperature before beginning the NDE of the completed weld. There should be no hydrogen present, and even if it were present, the temper bead welded component should be very tolerant of the moisture."
Page 5-2 of the report also notes that over 20 weld overlays and 100 repairs have been performed using temper bead techniques on low alloy steel components over the last 20 years. During this time, there has never been an indication of hydrogen cracking by the nondestructive examination performed after the 48 hour hold or by subsequent inservice inspection.

In addition, the ASME Section XI Committee approved Revision 4 to Code Case N-638 (i.e., N-638-4) in October 2006 to allow the 48-hour hold to begin after completing the third weld layer when using austenitic filler metals. Paragraph 4(a)(2) of the code case states in part: "When

austenitic materials are used, the weld shall be nondestructively examined after the three tempering layers (i.e., layers 1, 2, and 3) have been in place for at least 48 hours." The ASME Section XI technical basis for this change is documented in the White Paper in ASME C&S Connect for Code Case N-638-4. The ASME White Paper points out that introducing hydrogen to the ferritic HAZ is limited to the first weld layer since this is the only weld layer that makes contact with the ferritic base material. While the potential for introducing hydrogen to the ferritic HAZ is negligible during subsequent weld layers, these layers provide a heat source that accelerates the dissipation of hydrogen from the ferritic HAZ in non-water backed applications. Furthermore, the solubility of hydrogen in austenitic materials such as Alloy 52M is much higher than that of ferritic materials while the diffusivity of hydrogen in austenitic materials is lower than that of ferritic materials. As a result, hydrogen in the ferritic HAZ tends to diffuse into the austenitic weld metal which has a much higher solubility for hydrogen. This diffusion process is enhanced by heat supplied in subsequent weld layers. Like the EPRI report, the ASME White Paper concludes that there is sufficient delay time to facilitate detecting potential hydrogen cracking when NDE is performed 48 hours after completing the third weld layer.

g. The successive examination requirements of Attachment 2, paragraph 3.0(c) ensure that cracks identified by inservice inspections are appropriately monitored. According to paragraph 3.0(c) of Attachment 2, the weld overlay "shall be reexamined during the first or second refueling outage following discovery of the growth or new cracking." If additional crack growth or a new crack is discovered during a successive examination, then the successive examination of the weld overlay would be re-performed within the next two refueling outages. However, if the successive examination of the weld overlay reveals no additional indication of crack growth or new cracking, the weld overlay shall be placed into a population to be examined on a sample basis. Twenty-five percent (25%) of this population shall be examined once every ten (10) years. This successive examination schedule is identical to that specified in paragraph Q-4300 of ASME Section XI, Appendix Q which has been imposed as a condition to using Code Case N-504-2 by the NRC in Regulatory Guide 1.147.

h. The examination and inspection requirements in Attachment 2, Section 3.0 are equivalent to or more conservative than the examination and inspection requirements of Appendix Q of ASME Section XI as demonstrated in the comparison provided in Attachment 4 of this request.

4. NRC Submittals

a. Entergy will submit the following information to the NRC within fourteen (14) days from completing the final ultrasonic examinations of the completed weld overlays:

- Weld overlay examination results including a listing of indications detected[1]
- Disposition of indications using the standards of ASME Section XI, IWB-3514-2 and/or IWB-3514-3 criteria and, if possible, the type and nature of the indications[2]
- A discussion of any repairs to the weld overlay material and/or base metal and the reason for the repairs.

b. Entergy will also submit to the NRC a stress analysis summary demonstrating that the pressurizer and hot leg piping nozzles will perform their intended design functions after the weld overlay installation. The stress analysis report will include results showing that the requirements of NB-3200 and NB-3600 of the ASME Code, Section III are satisfied. The stress analysis will also include results showing that the requirements of IWB-3000 of the ASME Code, Section XI, are satisfied. The results will show that the postulated crack including its growth in the nozzles will not adversely affect the integrity of the overlaid welds. This information will be submitted to the NRC prior to entry into Mode 4 start-up from ANO-1's twentieth refueling outage (1R20).

B. Proposed Alternative to ASME Section XI Appendix VIII, Supplement 11

Appendix VIII, Supplement 11 of the 1995 Edition, 1996 Addenda of ASME Section XI specifies requirements for performance demonstration of ultrasonic examination procedures, equipment, and personnel used to detect and size flaws in full structural overlays of wrought austenitic piping welds. Entergy modifies the Appendix VIII, Supplement 11 qualification requirements by the proposed alternatives in the Performance Demonstration Initiative (PDI) Program as indicated in Attachment 6 of this request because the industry cannot meet the requirements of Appendix VIII, Supplement 11. Therefore, the PDI initiatives to ASME Section XI Appendix VIII, Supplement 11 as described in Attachment 6 will be used for qualification of ultrasonic examinations used to detect and size flaws in the preemptive full structural weld overlays of this request.

---

[1] The recording criteria of the ultrasonic examination procedure to be used for the examination of the ANO-1 pressurizer overlays requires that all indications, regardless of amplitude, be investigated to the extent necessary to provide accurate characterization, identity, and location. Additionally, the procedure requires that all indications, regardless of amplitude, that cannot be clearly attributed to the geometry of the overlay configuration be considered flaw indications.

[2] The ultrasonic examination procedure requires that all suspected flaw indications are to be plotted on a cross-sectional drawing of the weld and that the plots should accurately identify the specific origin of the reflector.

VI. CONCLUSION

10CFR50.55a(a)(3)(i) states:

"Proposed alternatives to the requirements of (c), (d), (e), (f), (g), and (h) of this section or portions thereof may be used when authorized by the Director of the Office of Nuclear Reactor Regulation. The applicant shall demonstrate that:

(i) The proposed alternatives would provide an acceptable level of quality and safety, or

(ii) Compliance with the specified requirements of this section would result in hardship or unusual difficulty without a compensating increase in the level of quality and safety."

Entergy believes that the proposed alternatives of this request provide an acceptable level of quality and safety. The preemptive weld overlays will be installed using Nickel Alloy 52M filler metal that is resistant to PWSCC. While this is the case, the overlays will also create compressive residual stresses along the inside diameter of the original weld, which prevents the initiation of new PWSCC. Finally, preservice and inservice inspection of the weld overlay will be performed to ensure structural integrity is maintained. Therefore, Entergy requests that the NRC staff authorize the proposed alternative in accordance with 10 CFR 50.55a(a)(3)(i).

VII. ATTACHMENTS

Attachment 1: Dissimilar Metal Weld Details and Figures

Attachment 2: Proposed Alternative for Preemptive Full Structural Weld Overlays

Attachment 3: Proposed Ambient Temperature Temperbead Technique

Attachment 4: Comparison of ASME Code Case N-504-2 and Appendix Q of ASME Section XI with the Proposed Alternative of Attachment 2 for Preemptive Full Structural Weld Overlays

Attachment 5: Technical Basis for Alternatives to ASME Code Case N-638-1, *Ambient Temperature Temperbead Welding*

Attachment 6: Comparison of ASME Section XI Appendix VIII, Supplement 11 to Performance Demonstration Initiative (PDI)

REQUEST FOR ALTERNATIVE
ANO-1-R&R-010

ATTACHMENT 1

DISSIMILAR METAL WELD DETAILS AND FIGURES

DISSIMILAR METAL WELD DETAILS

Nozzle Type	Material Identification					Pipe Size	Figure No.
	Nozzle	ISI Weld	Safe End (SE)	ISI Weld	Pipe/Fitting		
PZR Spray Line	A-508, Cl 1[1] w/SST Clad	DMW 82/182[2, 3] ID 18-001	SB-166, Alloy 600	DMW 082/182[2, 3] ID 18-001A	A-376, TP316 (Pipe)	4" NPS	1
PZR Safety Valve	A-508, Cl 1[1] w/SST Clad	DMW 82/182[2] ID 05-040	----	----	SA-182, F316 (Flange)	3" NPS	2
PZR Safety Valve	A-508, Cl 1[1] w/SST Clad	DMW 82/182[2] ID 05-042	----	----	SA-182, F316 (Flange)	3" NPS	2
PZR ERV	A-508, Cl 1[1] w/SST Clad	DMW 82/182[2] ID 05-041	----	----	SA-182, F316 (Flange)	2.5" NPS	2
PZR Surge Line	A-508, Cl 1[1] w/SST Clad	DMW 82/182[2] ID 16-012A	A-336, F8M[4]	----	SA-376, TP316 (Pipe)[5]	10" NPS	3
Hot Leg-to-Surge Line	A-105, Gr. 2[1] w/SST Clad	DMW 82/182[2] ID 16-001	----	----	A-376, TP316 (Pipe)	10" NPS	3

Notes:

1. Nozzle material is carbon steel.
2. DMW includes butter and weld.
3. One full structural overlay will be applied over both DMWs (82/182 welds). See Figure 1.
4. The pressurizer nozzle safe end for the surge line was manufactured from A-336, F8M stainless steel. Grade "F8M" was changed to "F316" in ASTM A-336-77a.
5. The full structural weld overlay for the surge line DMW will be applied onto the nozzle and safe end. It will not extend onto the piping. See Figure 3.

ANO-1 Pressurizer Spray Nozzle Structural Overlay

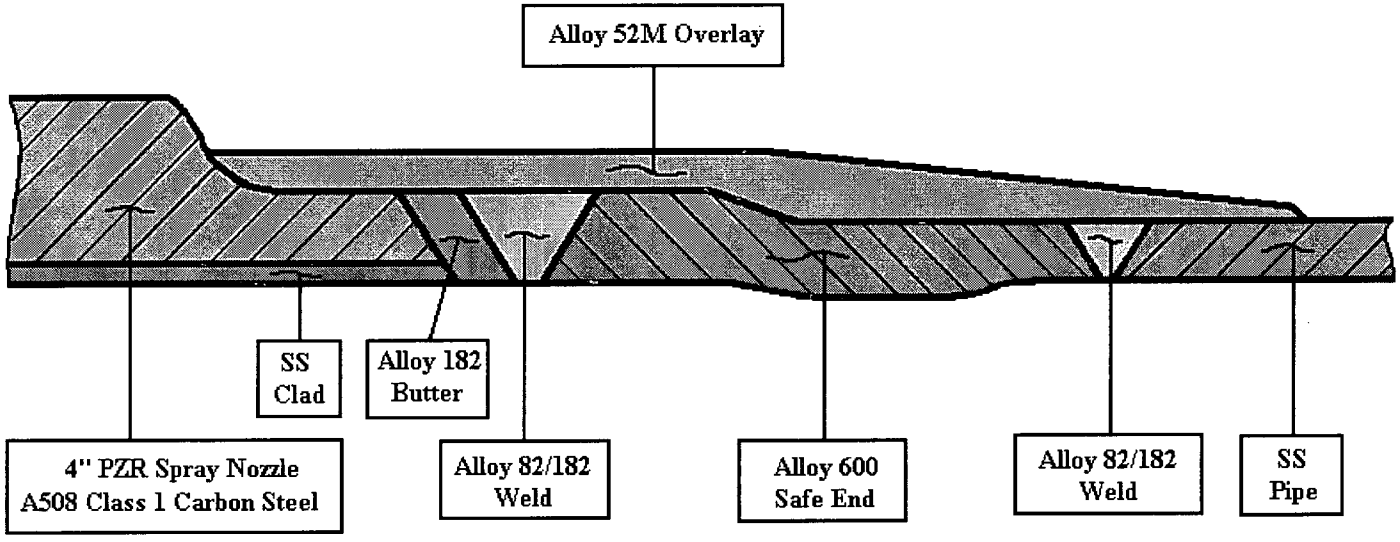

FIGURE 1

ANO-1 Pressurizer Safety and ERV Nozzle Structural Overlay

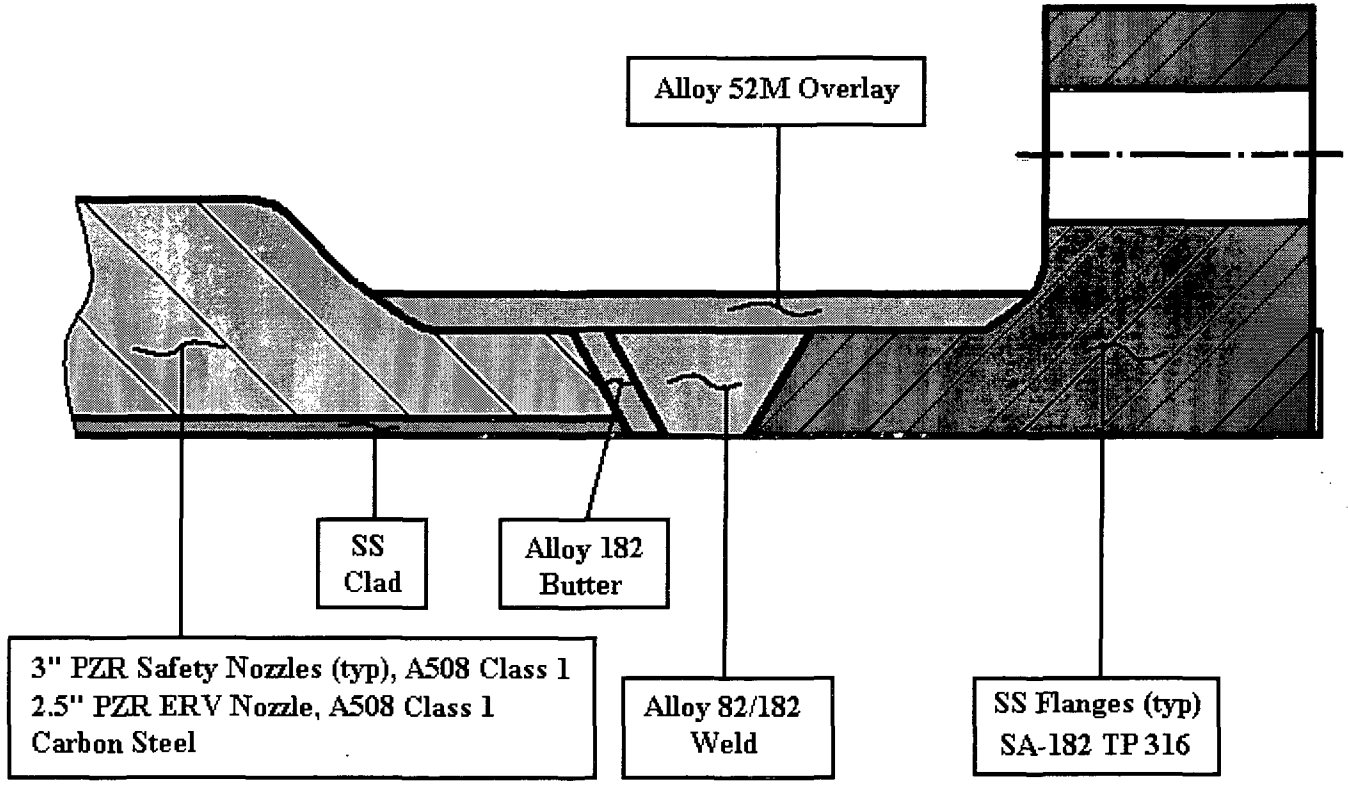

FIGURE 2

ANO-1 Pressurizer and Hot Leg Surge Nozzle Structural Overlay (typ)

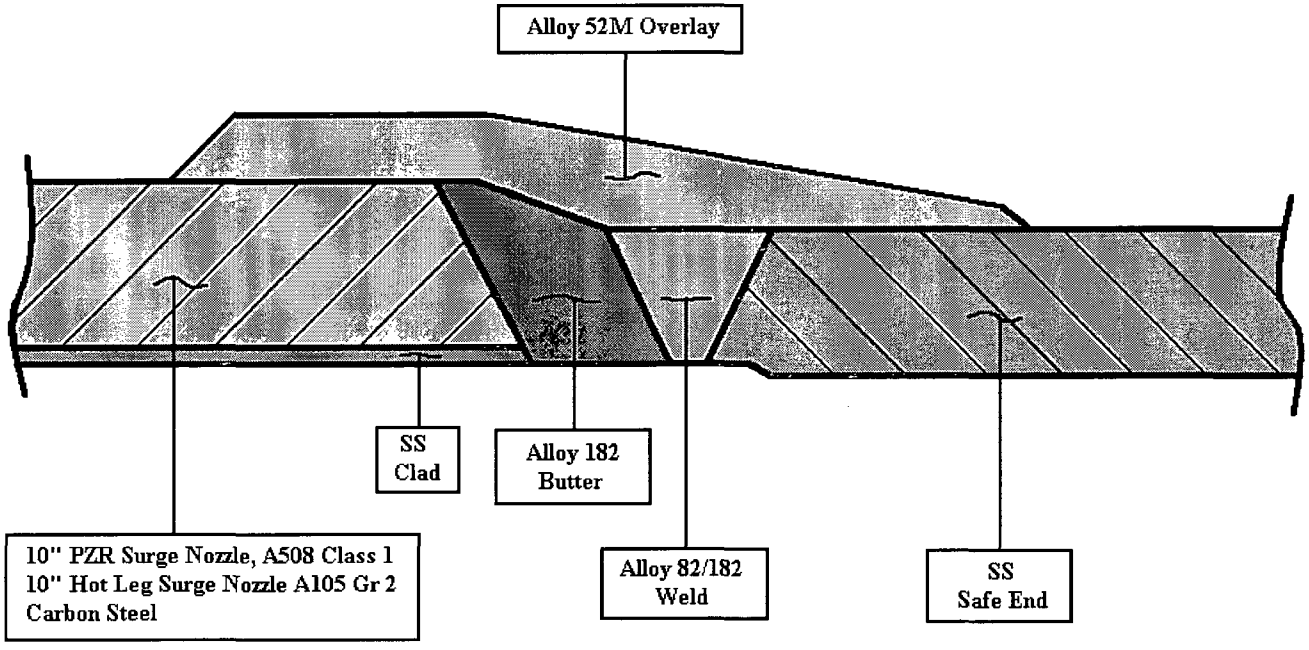

FIGURE 3

REQUEST FOR ALTERNATIVE
ANO-1-R&R-010

ATTACHMENT 2

PROPOSED ALTERNATIVE FOR PREEMPTIVE FULL STRUCTURAL WELD OVERLAYS

PROPOSED ALTERNATIVE FOR PREEMPTIVE FULL STRUCTURAL WELD OVERLAYS

1.0 GENERAL REQUIREMENTS

(a) Weld overlays may be applied to the 82/182 dissimilar metal welds joining the materials listed below.

- Carbon steel (P-No. 1) to Inconel 600 (P-No. 43) materials
- Carbon steel (P-No. 1) to stainless steel (P-No. 8) materials
- Inconel 600 (P-No. 43) to stainless steel (P-No. 8) materials

(b) Weld overlay filler metal shall be austenitic Nickel Alloy 52M (ERNiCrFe-7A) filler metal having a chromium content of at least 28%. The weld overlay is applied 360° around the circumference of the item, and shall be deposited using a Welding Procedure Specification (WPS) for groove welding, qualified in accordance with the Construction Code and Owner's Requirements, and identified in the Repair/Replacement Plan. As an alternative to the post-weld heat treatment requirements of the Construction Code and Owner's requirements, the provisions for "Ambient Temperature Temperbead Welding" may be used on the ferritic nozzle as described in Attachment 3.

(c) Prior to deposition of the weld overlay, the surface to be repaired shall be examined by the liquid penetrant method. Indications larger than 1/16 inch (1.5 mm) shall be removed, reduced in size, or corrected in accordance with the following requirements.

(1) One or more layers of weld metal shall be applied to seal unacceptable indications in the area to be repaired with or without excavation. The thickness of these layers shall not be used in meeting weld reinforcement design thickness requirements. Peening the unacceptable indication prior to welding is permitted.

(2) If correcting indications identified in 1.0(c) is required, the area where the weld overlay is to be deposited, including any local repairs or initial weld overlay layer, shall be examined by the liquid penetrant method. The area shall contain no indications greater than 1/16 in. (1.5 mm) prior to applying the structural layers of the weld overlay.

(d) Weld overlay deposits shall meet the following requirements:

The austenitic nickel alloy weld overlay shall consist of at least two weld layers deposited with a filler material such as identified in 1.0(b) above. The first layer of weld metal deposited may not be credited toward the required thickness. Alternatively, a diluted layer may be credited toward the required thickness, provided the portion of the layer over the austenitic base material, austenitic weld, and the associated dilution zone from an adjacent ferritic base material contains at least 24% chromium. The chromium content of the deposited weld metal may be determined by chemical analysis of the production weld or from a representative

coupon taken from a mockup prepared in accordance with the WPS for the production weld.

(e) A new weld overlay shall not be installed on top of an existing weld overlay that has been in service.

2.0 CRACK GROWTH CONSIDERATIONS AND DESIGN

(a) Crack Growth

Because the full structural weld overlays are being installed preemptively, a flaw with a depth of 75% and a circumference of 360° will be assumed. The size of the assumed flaws shall be projected to the end of the design life of the overlay. Crack growth, including both stress corrosion and fatigue crack growth, shall be evaluated in the materials in accordance with IWB-3640. If the flaw is at or near the boundary of two different materials, evaluation of flaw growth in both materials will be performed.

(b) Structural Design

The design of the weld overlay shall be analyzed and shown to satisfy the following, using the assumptions and flaw characterization restrictions in 2.0(a):

(1) The axial length and end slope of the weld overlay shall cover the weld and the heat affected zones (HAZs) on each side of the weld, and shall provide for load redistribution from the item into the weld overlay and back into the item without violating applicable stress limits of NB-3200. Any laminar flaws in the weld overlay shall be evaluated in the analysis to ensure that load redistribution complies with the above. These requirements will usually be satisfied if the weld overlay full thickness length extends axially beyond the projected flaw by at least $0.75\sqrt{Rt}$, where "R" is the outer radius of the item and "t" is the nominal wall thickness of the item.

(2) Unless specifically analyzed in accordance with 2.0(b)(1) above, the end transition slope of the overlay shall not exceed 45°. A slope of not more than 1:3 is recommended.

(3) Because the full structural weld overlays are being installed preemptively, flaws shall be assumed to be 100% through the original wall thickness for the entire circumference.

(4) The overlay design thickness of items meeting 2.0(b)(3) above shall be based on the measured diameter using only the weld overlay thickness conforming to the deposit analysis requirements of 1.0(d) above. The combined wall thickness at the weld overlay, any planar flaws in the weld overlay, the flaw size assumptions of 2.0(b)(3) above, and the effects of any discontinuity (e.g., another weld overlay or reinforcement for a branch connection) within a distance of $2.5\sqrt{Rt}$ from the toes of the weld overlay, shall be evaluated and shall meet the requirements of IWB-3640.

- **Note**: Although planar flaws are considered in the IWB-3640 evaluation of the combined wall thickness in paragraph 2.0(b)(4), these planar flaws must meet the acceptance standards of IWB-3500 as required by Attachment 2, paragraphs 3.0(a) and (b) of ANO1-R&R-010.

(5) The effects of any changes in applied loads, as a result of weld shrinkage from the entire overlay, on other items in the piping system (e.g., support loads and clearances, nozzle loads, changes in system flexibility and weight due to the weld overlay) shall be evaluated. Existing flaws previously accepted by analytical evaluation shall be evaluated in accordance with IWB-3640.

3.0 EXAMINATION AND INSPECTION

In lieu of all other examination requirements, the examination requirements proposed herein shall be met. Nondestructive examination (NDE) methods shall be in accordance with IWA-2200, except as specified herein. NDE personnel shall be qualified in accordance with IWA-2300. Ultrasonic examination procedures and personnel shall be qualified in accordance with Appendix VIII, Section XI.

(a) Acceptance Examination

(1) The weld overlay shall have a surface finish of 250 micro-inch (6.3 micrometers) RMS or better and a flatness that is sufficient to allow for adequate examination in accordance with procedures qualified per Appendix VIII. The weld overlay shall be examined to verify acceptable configuration.

(2) The weld overlay and the adjacent base material for at least ½ inch (13 mm) from each side of the weld shall be examined using the liquid penetrant method. The weld overlay shall satisfy the surface examination acceptance criteria for welds of the Construction Code or ASME Section III, NB-5300. The adjacent base metal shall satisfy the surface examination acceptance criteria for base material of the Construction Code or ASME Section III, NB-2500. If ambient temperature temperbead welding is used, liquid penetrant examination shall be conducted at least 48 hours after completing the third layer of the weld overlay.

(3) The examination volume A-B-C-D in Figure 1 (below) shall be ultrasonically examined to assure adequate fusion (i.e., adequate bond) with the base metal and to detect welding flaws, such as inter-bead lack of fusion, inclusions, or cracks. The interface C-D shown between the overlay and the weld includes the bond and the HAZ from the overlay. If ambient temperature temperbead welding is used, the ultrasonic examination shall be conducted at least 48 hours after completing the third layer of the weld overlay. Planar flaws shall meet the preservice examination standards of Table IWB-3514-2. In applying the acceptance standards, wall thickness "t_w" shall be the thickness of the weld overlay. Laminar flaws shall meet the following:

(i) Laminar flaws shall meet the acceptance standards of Table IWB-3514-3 with the additional limitation that the total laminar flaw shall not exceed 10% of the weld surface area and that no linear dimension of the laminar flaw area exceeds 3.0 inches (76 mm).

(ii) The reduction in coverage of the examination volume in Figure 1 due to laminar flaws shall be less than 10%. The dimensions of the un-inspectable volume are dependent on the coverage achieved with the angle beam examination of the overlay.

(iii) Any un-inspectable volume in the weld overlay shall be assumed to contain the largest radial planar flaw that could exist within that volume. This assumed flaw shall meet the inservice examination standards of Table IWB-3514-2. Alternately, the assumed flaw shall be evaluated and shall meet the requirements of IWB-3640. Both axial and circumferential planar flaws shall be assumed.

(4) If a weld overlay does not meet the acceptance standards specified in 3.0(a)(2) and (3)above, the weld overlay shall be corrected by a repair/replacement activity in accordance with IWA-4000.

(5) After completing welding activities, affected restraints, supports, and snubbers shall be VT-3 visually examined to verify that design tolerances are met.

(b) Preservice Inspection

(1) The examination volume A-B-C-D in Figure 2 (below) shall be ultrasonically examined. The angle beam shall be directed perpendicular and parallel to the piping axis, with scanning performed in four directions to locate and size any cracks that might have propagated into the upper 25% of the base material or into the weld overlay. If ambient temperature temperbead welding is used, the ultrasonic examination shall be conducted at least 48 hours after completing the third layer of the weld overlay.

(2) The preservice examination acceptance standards of Table IWB-3514-2 shall be met for the weld overlay. In applying the acceptance standards, wall thickness, t_w, shall be the thickness of the weld overlay. Cracks in the outer 25% of the base metal shall meet the design analysis requirements of 2.0 above.

(c) Inservice Inspection

(1) The weld overlay examination volume A-B-C-D in Figure 2 shall be added to the inspection plan and shall be ultrasonically examined during the first or second refueling outage following application.

(2) The weld overlay examination volume in Figure 2 shall be ultrasonically examined to determine if any new or existing cracks have propagated into the upper 25% of the base material or into the overlay. The angle beam shall

be directed perpendicular and parallel to the piping axis, with scanning performed in four directions.

(3) The acceptance standards for the ultrasonic examination of the weld overlay are specified in Table IWB-3514-2. However, if the weld overlay fails to meet the acceptance standards of Table IWB-3514-2, it can be accepted based on an analytical evaluation meeting the requirements and acceptance criteria of IWB-3600. However, flaws identified as primary water stress corrosion cracking (PWSCC) cannot be accepted by an IWB-3600 analytical evaluation. Cracks in the outer 25% of the base metal shall meet the design analysis requirements of 2.0 above.

(4) Weld overlay examination volumes that show no indication of crack growth or new cracking shall be placed into a population to be examined on a sample basis. Twenty-five percent of this population shall be examined once every ten years.

(5) If inservice examinations reveal crack growth, or new cracking, meeting the acceptance standards, the weld overlay examination volume shall be reexamined during the first or second refueling outage following discovery of the growth or new cracking. Weld overlay examination volumes that show no additional indication of crack growth or new cracking shall be placed into a population to be examined on a sample basis. Twenty-five percent (25%) of this population shall be examined once every ten years.

(6) For weld overlay examination volumes that fail to meet the acceptance criteria as described in 3.0(c)(3) above, the weld overlay shall be removed, including the original defective weld, and the item shall be corrected by a repair/replacement activity in accordance with IWA-4000.

(d) Additional Examinations

If inservice examinations reveal an unacceptable indication, crack growth into the weld overlay design thickness, or axial crack growth beyond the specified examination volume, additional weld overlay examination volumes, equal to the number scheduled for the current inspection period, shall be examined prior to return to service. If additional unacceptable indications are found in the second sample, 50% of the total population of weld overlay examination volumes shall be examined prior to operation. If additional unacceptable indications are found, the entire remaining population of weld overlay examination volumes shall be examined prior to return to service.

4.0 PRESSURE TESTING

A system leakage test shall be performed in accordance with IWA-5000.

5.0 DOCUMENTATION

Use of this alternative shall be documented on Form NIS-2. Alternatively, it may be documented on Form NIS-2A as described in Code Case N-532-1 based on appropriate NRC approval.

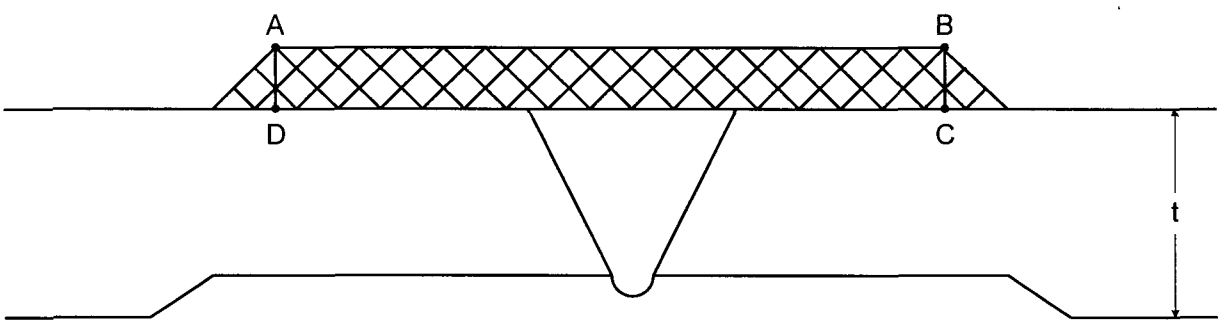

Examination Volume A-B-C-D

FIGURE 1

ACCEPTANCE EXAMINATION VOLUME

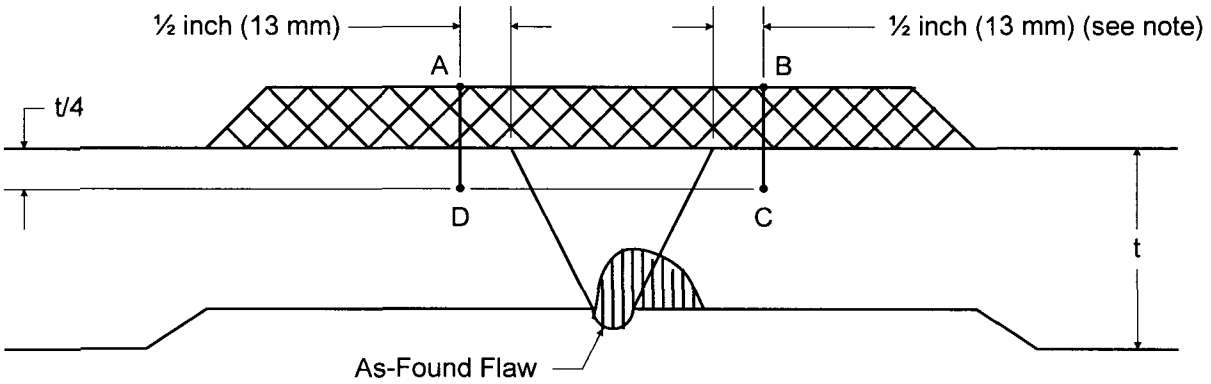

Examination Volume A-B-C-D

NOTE

For axial or circumferential flaws, the axial extent of the examination volume shall extend at least ½ inch (13 mm) beyond the as-found flaw and at least ½ inch (13 mm) beyond the toes of the original weld, including weld end butter, where applied.

FIGURE 2

PRESERVICE AND INSERVICE EXAMINATION VOLUME

REQUEST FOR ALTERNATIVE
ANO-1-R&R-010

ATTACHMENT 3

PROPOSED AMBIENT TEMPERATURE TEMPERBEAD TECHNIQUE

PROPOSED AMBIENT TEMPERATURE TEMPERBEAD TECHNIQUE

1.0 GENERAL REQUIREMENTS

(a) This appendix applies to dissimilar austenitic filler metal welds joining P-No. 8 or 43 material to P-No. 1 material.

(b) The maximum area of an individual weld overlay based on the finished surface over the ferritic base material shall be 300 square inches.

(c) Repair/replacement activities on a dissimilar-metal weld in accordance with this attachment are limited to those along the fusion line of a nonferritic weld to ferritic base material on which 1/8 inch, or less of nonferritic weld deposit exists above the original fusion line.

(d) If a defect penetrates into the ferritic base material, repair of the base material, using a nonferritic weld filler material, may be performed in accordance with this attachment, provided the depth of repair in the base material does not exceed 3/8 inch.

(e) Prior to welding the area to be welded and a band around the area of at least 1-1/2 times the component thickness or 5 inches, whichever is less, shall be at least 50°F (10°C).

(f) Welding materials shall meet the Owner's Requirements and the Construction Code and Cases specified in the Repair/Replacement Plan. Welding materials shall be controlled so that they are identified as acceptable until consumed.

(g) Peening may be used, except on the initial and final layers.

2.0 WELDING QUALIFICATIONS

Welding procedures and welding operators shall be qualified in accordance with ASME Section IX and the requirements of Sections 2.1 and 2.2 below.

2.1 Procedure Qualification

(a) The base materials for the welding procedure qualification shall be of the same P-Number and Group Number, as the materials to be welded. The materials shall be post-weld heat treated to at least the time and temperature that was applied to the materials being welded.

(b) The root width and included angle of the cavity in the test assembly shall be no greater than the minimum specified for the repair.

(c) The maximum interpass temperature for the first three layers of the test assembly shall be 150°F (66°C).

(d) The test assembly cavity depth shall be at least 1 inch (25 mm). The test assembly thickness shall be at least twice the test assembly cavity depth. The test assembly shall be large enough to permit removing the required test specimens. The test assembly dimensions surrounding the cavity shall be at least the test assembly thickness and at least 6 inches (150 mm). The qualification test plate shall be prepared in accordance with Figure 1-1.

(e) Ferritic base material for the procedure qualification test shall meet the impact test requirements of the Construction Code and Owner's Requirements. If such requirements are not in the Construction Code and Owner's Requirements, the impact properties shall be determined by Charpy V-notch impact tests of the procedure qualification base material at or below the lowest service temperature of the item to be repaired. The location and orientation of the test specimens shall be similar to those required in (f) below, but shall be in the base metal.

(f) Charpy V-notch tests of the ferritic heat-affected zone (HAZ) shall be performed at the same temperature as the base metal test of (e) above. Number, location, and orientation of test specimens shall be as follows:

(1) The specimens shall be removed from a location as near as practical to a depth of one-half the thickness of the deposited weld metal. The coupons for HAZ impact specimens shall be taken transverse to the axis of the weld and etched to define the HAZ. The notch of the Charpy V-notch specimen shall be cut approximately normal to the material surface in such a manner as to include as much HAZ as possible in the resulting fracture. Where the material thickness permits, the axis of a specimen shall be inclined to allow the root of the notch to be aligned parallel to the fusion line.

(2) If the test material is in the form of a plate or a forging, the axis of the weld shall be oriented parallel to the principal direction of rolling or forging.

(3) The Charpy V-notch test shall be performed in accordance with SA-370. Specimens shall be in accordance with SA-370, Fig. 11, Type A. The test shall consist of a set of three full-size 10 mm X 10 mm specimens. The lateral expansion, percent shear, absorbed energy, test temperature, orientation and location of all test specimens shall be reported in the Procedure Qualification Record.

(g) The average lateral expansion value of the three HAZ Charpy V-notch specimens shall be equal to or greater than the average lateral expansion value of the three unaffected base metal specimens.

2.2 Performance Qualification

Welding operators shall be qualified in accordance with ASME Section IX.

3.0 WELDING PROCEDURE REQUIREMENTS

The welding procedure shall include the following requirements.

(a) The weld metal shall be deposited by the automatic or machine gas tungsten arc welding (GTAW) process.

(b) Dissimilar metal welds shall be made using F-No. 43 weld metal (QW-432) for P-No. 8 or 43 to P-No. 1 weld joints.

(c) The area to be welded shall be buttered with a deposit of at least three layers to achieve at least 1/8 inch (3mm) overlay thickness with the heat input for each layer controlled to within ±10% of that used in the procedure qualification test. Particular care shall be taken in the placement of the weld layers of the austenitic overlay filler material at the toe of the overlay to ensure that the HAZ and ferritic base metal are tempered. Subsequent layers shall be deposited with a heat input not exceeding that used for layers beyond the third layer in the procedure qualification.

(d) The maximum interpass temperature for field applications shall be 350°F (180°C) for all weld layers regardless of the interpass temperature used during qualification.

(e) The preheat and interpass temperatures will be measured using a contact pyrometer. In the first three layers, the interpass temperature will be measured every three to five passes. After the first three layers, interpass temperature measurements will be taken every six to ten passes for the subsequent layers. Contact pyrometers will be calibrated in accordance with approved calibration and control program documents.

(f) Particular care shall be given to ensure that the weld region is free of all potential sources of hydrogen. The surfaces to be welded, filler metal, and shielding gas shall be suitably controlled.

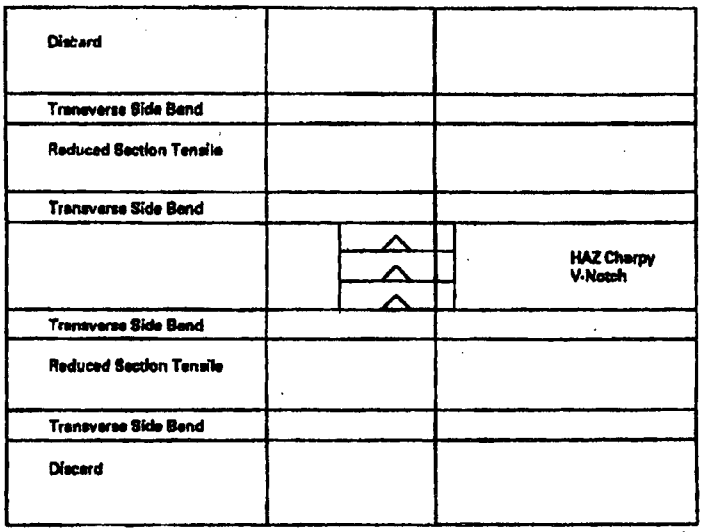

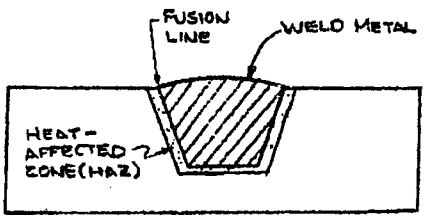

NOTE

Base metal Charpy impact specimens are not shown.

FIGURE 1-1

QUALIFICATION TEST PLATE

REQUEST FOR ALTERNATIVE
ANO-1-R&R-010

ATTACHMENT 4

COMPARISON OF ASME CODE CASE N-504-2 AND APPENDIX Q OF ASME SECTION XI WITH THE PROPOSED ALTERNATIVE OF ATTACHMENT 2 FOR PREEMPTIVE FULL STRUCTURAL WELD OVERLAYS

COMPARISON OF ASME CODE CASE N-504-2 AND APPENDIX Q OF ASME SECTION XI WITH THE PROPOSED ALTERNATIVE OF ATTACHMENT 2 FOR PREEMPTIVE FULL STRUCTURAL WELD OVERLAYS

Code Case N-504-2 and Appendix Q of ASME Section XI	Proposed Alternative of Attachment 2
Code Case N-504-2 provides requirements for reducing a defect to a flaw of acceptable size by deposition of weld reinforcement (weld overlay) on the outside surface of the pipe using austenitic stainless steel filler metal as an alternative to defect removal. Code Case N-504-2 is applicable to austenitic stainless steel piping only. According to Regulatory Guide 1.147, the provisions of Non-mandatory Appendix Q of ASME Section XI must also be met when using this Case. Therefore, the Code Case N-504-2 requirements presented below have been supplemented by Appendix Q of ASME Section XI.	The proposed alternative of Attachment 2 provides requirements for installing a preemptive full structural weld overlay by deposition of weld reinforcement (weld overlay) on the outside surface of the item using Nickel Alloy 52M filler metal. Attachment 2 is applicable to dissimilar metal welds associated with ferritic, stainless steel, and nickel alloy materials. It is also applicable to similar metal welds in austenitic stainless steels. The proposed alternative of Attachment 2 is based on Code Case N-740.
General Requirements	**1.0 General Requirements**
Code Case N-504-2 and Appendix Q are only applicable to P-No. 8 austenitic stainless steels.	As specified in paragraph 1.0(a) of Attachment 2, the proposed alternative is applicable to dissimilar metal 82/182 welds joining P-No. 1 to P-No. 8 or 43 materials and P-No. 8 to P-No. 43 materials. It is also applicable to austenitic stainless steel welds joining P-No. 8 materials. **Basis**: Code Case N-504-2 and Appendix Q are applicable to austenitic weld overlays of P-No. 8 austenitic stainless steel materials. Based on Code Case N-740, the proposed alternative of Attachment 2 was specifically written to address the application of weld overlays over dissimilar metal welds and austenitic stainless steel welds.
According to paragraph (b) of Code Case N-504-2 as supplemented by Appendix Q, weld overlay filler metal shall be low carbon (0.035% max.) austenitic stainless steel applied 360 degrees around the circumference of the pipe, and shall be deposited using a Welding Procedure Specification for groove welding, qualified in accordance with the Construction Code and Owner's Requirements and identified in the Repair/Replacement Plan.	The weld filler metal and procedure requirements of Attachment 2, paragraph 1.0(b) are equivalent to Code Case N-504-2 and Appendix Q except as noted below: • Weld overlay filler metal shall be austenitic Nickel Alloy 52M (ERNiCrFe-7A) filler metal which has a chromium content of at least 28%.

Code Case N-504-2 and Appendix Q of ASME Section XI	Proposed Alternative of Attachment 2
	As an alternative to post-weld heat treatment, the provisions for "Ambient Temperature Temperbead Welding" may be used on the ferritic nozzle as described in Attachment 3. **Basis**: The weld overlay will be deposited with ERNiCrFe-7 (Alloy 52M) filler metal. It has been included into ASME Section IX as F-No. 43 filler metals. Containing 28.0 – 31.5% chromium (roughly twice the chromium content of 82/182 filler metal), this filler metal has excellent resistance to PWSCC. This point has been clearly documented in EPRI Technical Report MRP-115, Section 2.2. Regarding the WPS, paragraph 1.0(b) of Attachment 2 provides clarification that the WPS used for depositing weld overlays must be qualified as a groove welding procedure to ensure that mechanical properties of the WPS are appropriately established. Where welding is performed on ferritic nozzles, an ambient temperature temperbead WPS will be used. Suitability of an ambient temperature temperbead WPS is addressed in Section V.A.2 of this Request.
According to paragraph (e) of Code Case N-504-2 as supplemented by Appendix Q, the weld reinforcement shall consist of at least two weld layers having as-deposited delta ferrite content of at least 7.5 FN. The first layer of weld metal with delta ferrite content of at least 7.5 FN shall constitute the first layer of the weld reinforcement that may be credited toward the required thickness. Alternatively, first layers of at least 5 FN provided the carbon content is determined by chemical analysis to be less than 0.02%.	The weld overlay Attachment 2 is deposited using Nickel Alloy 52M filler metal instead of austenitic stainless steel filler metals. Therefore, the basis for crediting the first layer towards the required design thickness will be based on the chromium content of the nickel alloy filler metal. According to paragraph 1.0(d) of Attachment 2, the first layer of Nickel Alloy 52M deposited weld metal may be credited toward the required thickness provided the portion of the layer over the austenitic base material, austenitic weld, and the associated dilution zone from an adjacent ferritic base material contains at least 24% chromium. The chromium content of the deposited weld metal may be determined by chemical analysis of the production weld or from a representative coupon taken from a mockup prepared in accordance with the WPS for the production weld. **Basis**: The weld overlay will be deposited with ERNiCrFe-7 (Alloy 52M) filler metal. Credit for the first weld layer may not be taken toward the required thickness unless it has been shown to contain at least 24% chromium. This is a sufficient amount of chromium to prevent PWSCC. Section 2.2 of EPRI Technical Report MRP-115 states the following: "The only well explored effect of the compositional differences among the weld alloys on PWSCC is the influence of chromium. Buisine, et al. evaluated

Code Case N-504-2 and Appendix Q of ASME Section XI	Proposed Alternative of Attachment 2
	the PWSCC resistance of nickel-based weld metals with various chromium contents ranging from about 15% to 30% chromium. Testing was performed in doped steam and primary water. Alloy 182, with about 14.5% chromium, was the most susceptible. Alloy 82 with 18-20% chromium took three or four times longer to crack. For chromium contents between 21 and 22%, no stress corrosion crack initiation was observed..."
Design and Crack Growth Considerations	**2.0 Design and Crack Growth Considerations**
The design and flaw characterization provisions of Code Case N-504-2, paragraphs (f) and (g) as supplemented by Appendix Q are summarized below: (i) Flaw characterization and evaluation are based on the as-found flaw. Flaw evaluation of the existing flaws is based on IWB-3640 for the design life. • Multiple circumferential flaws shall be treated as one flaw of length equal to the sum of the lengths of the individual flaws. • Circumferential flaws are postulated as 100% through-wall for the entire circumference with one exception. When the combined length of circumferential flaws does not exceed 10% of the circumference, the flaws are only assumed to be 100% through-wall for the combined length of the flaws. • For axial flaws 1.5 inches or longer, or for five or more axial flaws of any length, the flaws shall be assumed to be 100% through-wall for the axial length of the flaw and entire circumference of the pipe. (ii) For four or fewer axial flaws less than 1.5 inches in length, the weld overlay thickness need only consist of two or more layers of weld metal meeting the deposit analysis requirements. (iii) The axial length and end slope of the weld overlay shall cover the weld and HAZs on each side of the weld, and shall provide for load redistribution from the item into the weld overlay and	The design and flaw evaluation provisions in the proposed alternative of Attachment 2, Section 2.0 are the same as Code Case N-504-2 as supplemented in Appendix Q with the exceptions below. Note that the design and flaw evaluation provisions of Attachment 2 are based on postulated flaws instead of as-found flaws since the structural weld overlays are being installed preemptively. • For crack growth evaluations, a flaw with a depth of 75% and a circumference of 360° will be assumed. The size of the assumed flaws shall be projected to the end of the design life of the overlay. Crack growth, including both stress corrosion and fatigue crack growth, shall be evaluated in the materials in accordance with IWB-3640. If the flaw is at or near the boundary of two different materials, evaluation of flaw growth in both materials is required. • For design, flaws shall be assumed to be 100% through the original wall thickness for the entire circumference. **Basis**: Preemptive weld overlays are being installed in accordance with Attachment 2 to proactively address and mitigate any future PWSCC issues with the subject welds. Because these weld overlays are being installed preemptively and not as a repair, postulated flaws are being assumed. Regarding the crack growth analysis, a flaw originating from the inside diameter, with a depth of 75%, and a circumference of 360 degrees will be assumed. A 75% through-wall flaw is the largest flaw that could remain undetected. A preservice volumetric examination will be performed after application of the weld overlay using an ASME Section XI, Appendix VIII [as implemented through PDI] examination procedure. This

Code Case N-504-2 and Appendix Q of ASME Section XI	Proposed Alternative of Attachment 2
back into the item without violating applicable stress limits of the Construction Code. Any laminar flaws in the weld overlay shall be evaluated in the analysis to ensure that load redistribution complies with the above. These requirements are usually met if the weld overlay extends beyond the projected flaw by at least 0.75 $(Rt)^{1/2}$. (iv) Unless specifically analyzed, the end transition slope of the overlay shall not exceed 45°, and a slope of not more than 1:3 is recommended. (v) The overlay design thickness of items shall be based on the measured diameter, using only the weld overlay thickness conforming to the deposit analysis requirements. The combined wall thickness at the weld overlay, any planar flaws in the weld overlay, and the effects of any discontinuity (e.g., another weld overlay or reinforcement for a branch connection) within a distance of 0.75 $(Rt)^{1/2}$ from the toes of the weld overlay, shall be evaluated and meet the requirements of IWB-, IWC-, or IWD-3640. (vi) The effects of any changes in applied loads, as a result of weld shrinkage or existing flaws previously accepted by analytical evaluation shall be evaluated in accordance with IWB-3640, IWC-3640, or IWD-3640, as applicable.	examination will verify that there is no cracking in the upper 25% of the original weld and base material. The preservice examination will also demonstrate that the assumption of a 75% through-wall crack is conservative. However, if any crack-like flaws are identified in the upper 25% of the original weld or base material by the preservice examination, then the as-found flaw (postulated 75% through-wall flaw plus the portion of the flaw in the upper 25%) will be used for the crack growth analysis. With regard to design, flaws are considered to be 100% through the original weld and no structural credit is taken for the weld. All other requirements are equivalent to Code Case N-504-2 as supplemented by Appendix Q.
Examination and Inspection	**3.0 Examination and Inspection**
Code Case N-504-2 does not include requirements for acceptance examination or inservice examination of weld overlays. Preservice examination is addressed. However, Appendix Q, Article Q-4000 does specify requirements applicable to weld acceptance examinations, preservice examinations, and inservice examinations.	Attachment 2, Section 3.0 of the proposed alternative specifies requirements applicable to weld acceptance examinations, preservice examinations, and inservice examinations.

Code Case N-504-2 and Appendix Q of ASME Section XI	Proposed Alternative of Attachment 2
Acceptance Examination	**3.0(a) Acceptance Examination**
<u>Acceptance Examination</u> Q-4100(c) states that the examination volume in Figure Q-4100-1 shall be ultrasonically examined to assure adequate fusion (i.e., adequate bond) with the base metal and to detect welding flaws, such as inter-bead lack of fusion, inclusions, or cracks. Planar flaws shall meet the preservice examination standards of Table IWB-3514-2. Laminar flaws shall meet the following:	The acceptance standards in paragraph 3.0(a)(3) of Attachment 2 are identical to those of paragraph Q-4100(c) except that paragraph 3.0(a)(3) includes requirements and clarifications that are not included in Appendix Q. First, it specifies that the ultrasonic examination shall be conducted at least 48 hours after completing the third layer of the weld overlay when ambient temperature temperbead welding is used. Secondly, it provides the following clarifications: • The interface C-D between the weld overlay and the weld includes the bond and the HAZ from the weld overlay. • In applying the acceptance standards, wall thickness "t_w" shall be the thickness of the weld overlay. **Basis:** Appendix Q is applicable to austenitic stainless steel materials only; therefore, ambient temperature temperbead welding would not be applicable. It is applicable to welding performed in the proposed alternative. When ambient temperature temperbead welding is performed, nondestructive examinations must be performed at least 48 hours after completing the third layer of the weld overlay to allow sufficient time for hydrogen cracking to occur (if it is to occur). Technical justification for starting the 48 hours after completion of the third layer of the weld overlay is provided in paragraph V.A.3.f of the Request. The other two changes are simply clarifications that were added to ensure that the examination requirements were appropriately performed.
Q-4100(c)(1) states that laminar flaws shall meet the acceptance standards of Table IWB-3514-3.	The acceptance standards in paragraph 3.0(a)(3)(i) of Attachment 2 are identical to paragraph Q-4100(c)(1) except that paragraph 3.0(a)(3)(i) includes the additional limitation that the total laminar flaw shall not exceed 10% of the weld surface area and that no linear dimension of the laminar flaw area exceeds 3.0 in.

Code Case N-504-2 and Appendix Q of ASME Section XI	Proposed Alternative of Attachment 2
	Basis: These changes were made to provide additional conservatism to the weld overlay examination and to reduce the size of the un-inspectable volume beneath a laminar flaw. See paragraph V.A.3.c of the Request for additional information.
Q-4100(c)(4) allows the performance of radiography in accordance with the Construction Code as an alternative to Q-4100(c) (3).	The acceptance standards in paragraph 3.0(a)(3) of Attachment 2 do not include the radiographic alternative of paragraph Q-4100(c)(4). **Basis**: The UT examinations performed in accordance with the proposed alternative are in accordance with ASME Section XI, Appendix VIII, Supplement 11 as implemented through the PDI. These examinations are considered more sensitive for detection of defects, either from fabrication or service-induced, than either ASME Section III radiographic or ultrasonic methods. Furthermore, construction type flaws have been included in the PDI qualification sample sets for evaluating procedures and personnel. See Section V.A.3 of this Request for additional justification.
Preservice Inspection	**3.0(b) Preservice Inspection**
Q-4200(b) states that the preservice examination acceptance standards of Table IWB-3514-2 shall be met for the weld overlay. Cracks in the outer 25% of the base metal shall meet the design analysis requirements of Q-3000.	The acceptance standards in paragraph 3.0(b)(2) of Attachment 2 are identical to paragraph Q-4200(b) except paragraph 3.0(b)(2) includes the following statement: "In applying the acceptance standards, wall thickness, t_w, shall be the thickness of the weld overlay." **Basis**: This provision is actually a clarification that the nominal wall thickness of Table IWB-3514-2 shall be considered the thickness of the weld overlay. It must be remembered that the acceptance standards were originally written for the welds identified in IWB-2500. Because IWB-2500 does not address weld overlays, this clarification was provided to avoid any potential confusion. However, defining the weld overlay thickness as the nominal wall thickness of Table IWB-3514-2 has always been the practice since it literally becomes the new design wall of the piping or component nozzle.

Code Case N-504-2 and Appendix Q of ASME Section XI	Proposed Alternative of Attachment 2
Pressure Testing	**4.0 Pressure Testing**
(h) The completed repair shall be pressure tested in accordance with IWA-5000. A system hydrostatic test is required if the flaw penetrated the pressure boundary. A system leakage test may be performed if pressure boundary is not penetrated.	The pressure testing requirements of Section 4.0 of Attachment 1 are similar to paragraph (h) of Code Case N-504-2 except that only a system leakage test per IWA-5000 is required.

REQUEST FOR ALTERNATIVE
ANO-1-R&R-010

ATTACHMENT 5

TECHNICAL BASIS FOR ALTERNATIVES TO
ASME CODE CASE N-638-1, *AMBIENT TEMPERATURE TEMPERBEAD WELDING*

TECHNICAL BASIS FOR PROPOSED ALTERNATIVES TO ASME CODE CASE N-638-1, *AMBIENT TEMPERATURE TEMPERBEAD WELDING*

1. BASIS FOR AREA LIMITATION CHANGE TO 300 SQUARE INCHES

IWA-4500 and versions of ASME Code Case N-638 prior to Revision 3 contained a limit of 100 square inches for the surface area of a temperbead weld over ferritic base metal. The area limitation in Attachment 3 is 300 square inches. It is anticipated that some overlays applied under this alternative will be greater than 100 square inches but less than 300 square inches.

NOTE

Code Case N-740 was approved with a temperbead surface area limitation of 500 square inches over the ferritic base metal. However, the proposed alternative has reduced this surface area limitation to 300 square inches to be consisted with the NRC's position on surface area.

Technical justification for allowing weld overlays on ferritic materials with surface areas up to 500 square inches is provided in the white paper supporting the changes in ASME Code Case N-638-3 and EPRI Report 1011898 (Ref. 7). The ASME white paper notes that the original limit of 100 square inches in Code Case N-638-1 was arbitrary. It cites evaluations of a 12-inch diameter nozzle weld overlay to demonstrate adequate tempering of the weld heat affected zone (HAZ) (Section 2a of the white paper), residual stress evaluations demonstrating acceptable residual stresses in weld overlays ranging from 100 to 500 square inches (Section 2b of the white paper), and service history in which weld repairs exceeding 100 square inches were NRC approved and applied to DMW nozzles in several BWR and PWR (Section 3c of the white paper) applications. Some of the cited repairs are greater than 15 years old, and have been inspected several times with no evidence of any continued degradation.

It is important to note that the above theoretical arguments and empirical data have been verified in practice by extensive field experience with temperbead weld overlays, with ferritic material coverage ranging from less than 10 square inches up to and including 325 square inches. The table below provides a partial list of such applications.

Date	Plant	Component	Nozzle Diameter (in)	Approx. LAS Coverage (in^2)
November 2006	SONGS Unit 3	PZR spray nozzle Safety/relief nozzles PZR surge nozzle	5.1875 8 12.75	40 60 110
November 2006	Catawba Unit 1	PZR spray nozzle Safety/relief nozzles PZR surge nozzle	4 6 14	30 50 120

Date	Plant	Component	Nozzle Diameter (in)	Approx. LAS Coverage (in^2)
November 2006	Oconee Unit 1	PZR spray nozzle Safety/relief nozzles PZR surge nozzle HL Surge Nozzle	4.5 4.5 10.875 10.75	30 30 105 70
October 2006	McGuire Unit 2	PZR spray nozzle Safety/relief nozzles PZR surge nozzle	4 6 14	30 50 120
April 2006	Davis-Besse	Hot leg drain nozzle	4	16
February 2006	SONGS Unit 2	PZR spray nozzle Safety/relief nozzles	8 6	50 28
November 2005	Kuosheng Unit 2	Recirc. outlet nozzle	22	250
April 2004	Susquehanna Unit 1	Recirc. inlet nozzle Recirc. outlet nozzle	12 28	100 325
November 2003	TMI Unit 1	Surge line nozzle	11.5	75
October 2003	Pilgrim	Core spray nozzle CRD return nozzle	10 5	50 20
October 2002	Peach Bottom Units 2 & 3	Core spray nozzle Recirc. outlet nozzle CRD return nozzle	10 28 5	50 325 20
October 2002	Oyster Creek	Recirc. outlet nozzle	26	285
December 1999	Duane Arnold	Recirc. inlet nozzle	12	100
June 1999	Perry	Feedwater nozzle	12	100
June 1998	Nine Mile Point Unit 2	Feedwater nozzle	12	100
March 1996	Brunswick Units 1 & 2	Feedwater nozzle	12	100
February 1996	Hatch Unit 1	Recirc. inlet nozzle	12	100
January 1991	River Bend	Feedwater nozzle	12	100
March 1986	Vermont Yankee	Core spray nozzle	10	50

It can be seen from the information above that the original DMW weld overlay was applied over 20 years ago, and weld overlays with low alloy steel coverage in the 100-square inch range have been in service for 5 to 15 years. Several overlays have been applied with low alloy steel coverage significantly greater than the 100 square inches. These overlays

have been examined with PDI qualified techniques, in some cases multiple times, and none have shown any signs of new cracking or growth of existing cracks.

2. Clarification of Charpy V-Notch Acceptance Criteria

Paragraph 2.1(j) of Code Case N-638-1 states, "The average of the three HAZ impact tests shall be equal to or greater than the average values of the three unaffected base metal tests." However, the Charpy V-notch test acceptance criteria in Code Case N-638-1 is misleading and inconsistent with the specified acceptance criteria in Section XI applicable to other Class 1 components, since it implies that all three parameters - lateral expansion, absorbed energy, and percent shear fracture – must be equal to or exceed the base material values.

Code Case N-638-2 corrected paragraph 2.1(j) to state that Charpy V-notch acceptance criteria is based on the *average lateral expansion values* rather than the average of all three values. This change clarified the intent of the code case and aligned its Charpy V-notch acceptance criteria with that of Sections III and XI as demonstrated in the Code references provided below.

- ASME Section III – NB-4330, *Impact Test Requirements*
- ASME Section XI - IWA-4620, *Temperbead Welding of Similar Materials*
- ASME Section XI - IWA-4630, *Temperbead Welding of Dissimilar Materials*

The Attachment 3 acceptance criteria for Charpy V-notch testing of the weld HAZ is as specified in Code Case N-638-2. The ASME Section XI basis for this change is documented in the White Paper in ASME C&S Connect for Code Case N-638-2.

REQUEST FOR ANO-1-R&R-010

ATTACHMENT 6

COMPARISON OF ASME SECTION XI, APPENDIX VIII, SUPPLEMENT 11 TO PERFORMANCE DEMONSTRATION INITIATIVE (PDI)

COMPARISON OF ASME SECTION XI APPENDIX VIII, SUPPLEMENT 11 TO PERFORMANCE DEMONSTRATION INITIATIVE (PDI)

Appendix VIII Supplement 11: Qualification Requirements for Full Structural Overlaid Wrought Austenitic Piping Welds	PDI Program: The Proposed Alternative to Supplement 11 Requirements
1.0 SPECIMEN REQUIREMENTS	
1.1 General. The specimen set shall conform to the following requirements.	**No Change**
(b) The specimen set shall consist of at least three specimens having different nominal pipe diameters and overlay thicknesses. They shall include the minimum and maximum nominal pipe diameters for which the examination procedure is applicable. Pipe diameters within a range of 0.9 to 1.5 times a nominal diameter shall be considered equivalent. If the procedure is applicable to pipe diameters of 24 in. or larger, the specimen set must include at least one specimen 24 in. or larger but need not include the maximum diameter. The specimen set must include at least one specimen with overlay thickness within -0.1 in. to +0.25 in. of the maximum nominal overlay thickness for which the procedure is applicable.	*(b)* The specimen set shall consist of at least three specimens having different nominal pipe diameters and overlay thicknesses. They shall include the minimum and maximum nominal pipe diameters for which the examination procedure is applicable. Pipe diameters within a range of 0.9 to 1.5 times a nominal diameter shall be considered equivalent. If the procedure is applicable to pipe diameters of 24 in. or larger, the specimen set must include at least one specimen 24 in. or larger but need not include the maximum diameter. The specimen set shall include specimens with overlays not thicker than 0.1 in. more than the minimum thickness, nor thinner than 0.25 in. of the maximum nominal overlay thickness for which the examination procedure is applicable. **Basis**: To avoid confusion, the overlay thickness tolerance contained in the last sentence was reworded.
(*d*) *Flaw Conditions*	
(1) *Base metal flaws.* All flaws must be cracks in or near the butt weld heat-affected zone, open to the inside surface, and extending at least 75% through the base metal wall. Flaws may extend 100% through the base metal and into the overlay material; in this case, intentional overlay fabrication flaws shall not interfere with ultrasonic detection or characterization of the cracking. Specimens containing IGSCC shall be used when available.	(1) *Base metal flaws.* All flaws must be in or near the butt weld heat-affected zone, open to the inside surface, and extending at least 75% through the base metal wall. Intentional overlay fabrication flaws shall not interfere with ultrasonic detection or characterization of the base metal flaws. Specimens containing IGSCC shall be used when available. At least 70 percent of the flaws in the detection and sizing tests shall be cracks and the remainder shall be alternative flaws. Alternative flaw mechanisms, if used, shall provide crack-like reflective characteristics and shall be limited by the following:

Appendix VIII Supplement 11: Qualification Requirements for Full Structural Overlaid Wrought Austenitic Piping Welds	PDI Program: The Proposed Alternative to Supplement 11 Requirements
	(a) The use of Alternative flaws shall be limited to when the implantation of cracks produces spurious reflectors that are uncharacteristic of actual flaws. (b) Flaws shall be semi-elliptical with a tip width of less than or equal to 0.002 inches. **Basis**: Paragraph 1.1(d)(1) requires that all base metal flaws be cracks. Implanting a crack requires excavation of the base material on at least one side of the flaw. While this may be satisfactory for ferritic materials, it does not produce a useable axial flaw in austenitic materials because the sound beam, which normally passes only through base material, must now travel through weld material on at least one side, producing an unrealistic flaw response. To resolve this issue, the PDI program revised this paragraph to allow use of alternative flaw mechanisms under controlled conditions. For example, alternative flaws shall be limited to when implantation of cracks precludes obtaining an effective ultrasonic response, flaws shall be semi-elliptical with a tip width of less than or equal to 0.002 inches, and at least 70% of the flaws in the detection and sizing test shall be cracks and the remainder shall be alternative flaws. The statement "intentional overlay fabrication flaws shall not interfere with ultrasonic detection or characterization of the base metal flaws" was included into paragraph 1.1(d)(1). Additionally, to avoid confusion, the phrase "and the remainder shall be alternate flaws" was added to the second to last sentence of this paragraph.

Appendix VIII Supplement 11: Qualification Requirements for Full Structural Overlaid Wrought Austenitic Piping Welds	PDI Program: The Proposed Alternative to Supplement 11 Requirements
(e) Detection Specimens	
(1) At least 20% but less than 40% of the flaws shall be oriented within ±20 deg. of the pipe axial direction. The remainder shall be oriented circumferentially. Flaws shall not be open to any surface to which the candidate has physical or visual access. The rules of IWA-3300 shall be used to determine whether closely spaced flaws should be treated as single or multiple flaws.	(1) At least 20% but less than 40% of the base metal flaws shall be oriented within ±20 deg. of the pipe axial direction. The remainder shall be oriented circumferentially. Flaws shall not be open to any surface to which the candidate has physical or visual access. **Basis**: The requirement for axially oriented overlay fabrication flaws in paragraph 1.1(e)(1) was excluded from the PDI Program as an improbable scenario. Weld overlays are typically applied using automated Gas Tungsten Arc Welding techniques with the filler metal being applied in a circumferential direction. Because resultant fabrication induced discontinuities would also be expected to have major dimensions oriented in the circumferential direction axial overlay fabrication flaws are unrealistic. The requirement for using IWA-3300 for proximity flaw evaluation in paragraph 1.1(e)(1) was excluded, instead, indications will be sized based on their individual merits.
(2) Specimens shall be divided into base and overlay grading units. Each specimen shall contain one or both types of grading units.	(2) Specimens shall be divided into base metal and overlay fabrication grading units. Each specimen shall contain one or both types of grading units. Flaws shall not interfere with ultrasonic detection or characterization of other flaws.
(a)(1) A base grading unit shall include at least 3 in. of the length of the overlaid weld. The base grading unit includes the outer 25% of the overlaid weld and base metal on both sides. The base grading unit shall not include the inner 75% of the overlaid weld and base metal overlay material, or base metal-to-overlay interface.	*(a)(1)* A base metal grading unit includes the overlay material and the outer 25% of the original overlaid weld. The base metal grading unit shall extend circumferentially for at least 1 in. and shall start at the weld centerline and be wide enough in the axial direction to encompass one half of the original weld crown and a minimum of 0.50" of the adjacent base material. **Basis**: The phrase "and base metal on both sides", was inadvertently included in the description of a base metal grading unit. The PDI program intentionally excludes this requirement because some of the qualification samples include flaws on both sides of the weld. This paragraph was also modified to require that a base metal grading unit include at least 1 inch of the length of the overlaid weld, rather than 3 inches.

Appendix VIII Supplement 11: Qualification Requirements for Full Structural Overlaid Wrought Austenitic Piping Welds	PDI Program: The Proposed Alternative to Supplement 11 Requirements
(a)(2) When base metal cracking penetrates into the overlay material, the base grading unit shall include the overlay metal within 1 in. of the crack location. This portion of the overlay material shall not be used as part of any overlay grading unit.	*(a)(2)* When base metal flaws penetrate into the overlay material, the base metal grading unit shall not be used as part of any overlay fabrication grading unit.
(a)(3) When a base grading unit is designed to be unflawed, at least 1 in. of unflawed overlaid weld and base metal shall exist on either side of the base grading unit. The segment of weld length used in one base grading unit shall not be used in another base grading unit. Base grading units need not be uniformly spaced around the specimen.	*(a)(3)* Sufficient unflawed overlaid weld and base metal shall exist on all sides of the grading unit to preclude interfering reflections from adjacent flaws. **Basis**: This paragraph was modified to require sufficient unflawed overlaid weld and base metal to exist on all sides of the grading unit to preclude interfering reflections from adjacent flaws, rather than the 1 inch requirement.
(b)(1) An overlay grading unit shall include the overlay material and the base metal-to-overlay interface of at least 6 square inch. The overlay grading unit shall be rectangular, with minimum dimensions of 2 inches.	*(b)(1)* An overlay fabrication grading unit shall include the overlay material and the base metal-to-overlay interface for a length of at least 1 inch. **Basis**: This paragraph was modified to define an overlay fabrication grading unit as including the overlay material and the base metal-to-overlay interface for a length of at least 1 in, rather than the 6 square inch requirement.
(b)(2) An overlay grading unit designed to be unflawed shall be surrounded by unflawed overlay material and unflawed base metal-to-overlay interface for at least 1 in. around its entire perimeter. The specific area used in one overlay grading unit shall not be used in another overlay grading unit. Overlay grading units need not be spaced uniformly about the specimen.	*(b)(2)* Overlay fabrication grading units designed to be unflawed shall be separated by unflawed overlay material and unflawed base metal-to-overlay interface for at least 1 in. at both ends. Sufficient unflawed overlaid weld and base metal shall exist on both sides of the overlay fabrication grading unit to preclude interfering reflections from adjacent flaws. The specific area used in one overlay fabrication grading unit shall not be used in another overlay fabrication grading unit. Overlay fabrication grading units need not be spaced uniformly about the specimen. **Basis**: This paragraph states that overlay fabrication grading units designed to be unflawed shall be separated by unflawed overlay material and unflawed base metal-to-overlay interface for at least 1 in. at both ends, rather than around its entire perimeter.

Appendix VIII Supplement 11: Qualification Requirements for Full Structural Overlaid Wrought Austenitic Piping Welds	PDI Program: The Proposed Alternative to Supplement 11 Requirements
(b)(3) Detection sets shall be selected from Table VIII-S2-1. The minimum detection sample set is five flawed base grading units, ten unflawed base grading units, five flawed overlay grading units, and ten unflawed overlay grading units. For each type of grading unit, the set shall contain at least twice as many unflawed as flawed grading units.	*(b)(3)* Detection sets shall be selected from Table VIII-S2-1. The minimum detection sample set is five flawed base metal grading units, ten unflawed base metal grading units, five flawed overlay fabrication grading units, and ten unflawed overlay fabrication grading units. For each type of grading unit, the set shall contain at least twice as many unflawed as flawed grading units. For initial procedure qualification, detection sets shall include the equivalent of three personnel qualification sets. To qualify new values of essential variables, at least one personnel qualification set is required. **Basis**: This paragraph states that overlay fabrication grading units designed to be unflawed shall be separated by unflawed overlay material and unflawed base metal-to-overlay interface for at least 1 in. at both ends, rather than around its entire perimeter.
(f) Sizing Specimen	
(1) The minimum number of flaws shall be ten. At least 30% of the flaws shall be overlay fabrication flaws. At least 40% of the flaws shall be cracks open to the inside surface.	*(1)* The minimum number of flaws shall be ten. At least 30% of the flaws shall be overlay fabrication flaws. At least 40% of the flaws shall be open to the inside surface. Sizing sets shall contain a distribution of flaw dimensions to assess sizing capabilities. For initial procedure qualification, sizing sets shall include the equivalent of three personnel qualification sets. To qualify new values of essential variables, at least one personnel qualification set is required.
(3) Base metal cracking used for length sizing demonstrations shall be oriented circumferentially.	*(3)* Base metal flaws used for length sizing demonstrations shall be oriented circumferentially.
(4) Depth sizing specimen sets shall include at least two distinct locations where cracking in the base metal extends into the overlay material by at least 0.1 in. in the through-wall direction.	*(4)* Depth sizing specimen sets shall include at least two distinct locations where a base metal flaw extends into the overlay material by at least 0.1 in. in the through-wall direction.

Appendix VIII Supplement 11: Qualification Requirements for Full Structural Overlaid Wrought Austenitic Piping Welds	PDI Program: The Proposed Alternative to Supplement 11 Requirements
2.0 CONDUCT OF PERFORMANCE DEMONSTRATION	
The specimen inside surface and identification shall be concealed from the candidate. All examinations shall be completed prior to grading the results and presenting the results to the candidate. Divulgence of particular specimen results or candidate viewing of unmasked specimens after the performance demonstration is prohibited.	The specimen inside surface and identification shall be concealed from the candidate. All examinations shall be completed prior to grading the results and presenting the results to the candidate. Divulgence of particular specimen results or candidate viewing of unmasked specimens after the performance demonstration is prohibited. The overlay fabrication flaw test and the base metal flaw test may be performed separately. **Basis**: The PDI Program revised paragraph 2.0 allowing the overlay fabrication and base metal flaw tests to be performed separately.
2.1 Detection Test.	
Flawed and unflawed grading units shall be randomly mixed. Although the boundaries of specific grading units shall not be revealed to the candidate, the candidate shall be made aware of the type or types of grading units (base or overlay) that are present for each specimen.	Flawed and unflawed grading units shall be randomly mixed. Although the boundaries of specific grading units shall not be revealed to the candidate, the candidate shall be made aware of the type or types of grading units (base metal or overlay fabrication) that are present for each specimen.
2.2 Length Sizing Test	
(d) For flaws in base grading units, the candidate shall estimate the length of that part of the flaw that is in the outer 25% of the base wall thickness.	*(d)* For flaws in base metal grading units, the candidate shall estimate the length of that part of the flaw that is in the outer 25% of the base metal wall thickness.

Appendix VIII Supplement 11: Qualification Requirements for Full Structural Overlaid Wrought Austenitic Piping Welds	PDI Program: The Proposed Alternative to Supplement 11 Requirements
2.3 Depth Sizing Test.	
For the depth sizing test, 80% of the flaws shall be sized at a specific location on the surface of the specimen identified to the candidate. For the remaining flaws, the regions of each specimen containing a flaw to be sized shall be identified to the candidate. The candidate shall determine the maximum depth of the flaw in each region.	*(a)* The depth sizing test may be conducted separately or in conjunction with the detection test. *(b)* When the depth sizing test is conducted in conjunction with the detection test and the detected flaws do not satisfy the requirements of 1.1(f), additional specimens shall be provided to the candidate. The regions containing a flaw to be sized shall be identified to the candidate. The candidate shall determine the maximum depth of the flaw in each region. *(c)* For a separate depth sizing test, the regions of each specimen containing a flaw to be sized shall be identified to the candidate. The candidate shall determine the maximum depth of the flaw in each region.
3.0 ACCEPTANCE CRITERIA	
3.1 Detection Acceptance Criteria.	
Examination procedures, equipment, and personnel are qualified for detection when the results of the performance demonstration satisfy the acceptance criteria of Table VIII-S2-1 for both detection and false calls. The criteria shall be satisfied separately by the demonstration results for base grading units and for overlay grading units.	*(a)* Examination procedures are qualified for detection when; *(1)* All flaws within the scope of the procedure are detected and the results of the performance demonstration satisfy the acceptance criteria of Table VIII-S2-1 for false calls. *(2)* At least one successful personnel demonstration has been performed meeting the acceptance criteria defined in (3b). *(3)* Examination equipment and personnel are qualified for detection when the results of the performance demonstration satisfy the acceptance criteria of Table VIII-S2-1 for both detection and false calls. *(4)* The criteria in (2), (3) shall be satisfied separately by the demonstration results for base metal grading units and for overlay fabrication grading units.

Appendix VIII Supplement 11: Qualification Requirements for Full Structural Overlaid Wrought Austenitic Piping Welds	PDI Program: The Proposed Alternative to Supplement 11 Requirements
	Basis: The PDI Program allows procedure qualification to be performed separately from personnel and equipment qualification. Historical data indicate that, if ultrasonic detection or sizing procedures are thoroughly tested, personnel and equipment using those procedures have a higher probability of successfully passing a qualification test. In an effort to increase the passing rate, PDI has elected to perform procedure qualifications separately in order to assess and modify essential variables that may affect overall system capabilities. For a procedure to be qualified, the PDI program requires three times as many flaws to be detected (or sized) as shown in Supplement 11 for the entire ultrasonic system. The personnel and equipment are still required to meet Supplement 11.
3.2 Sizing Acceptance Criteria.	
(a) The RMS error of the flaw length measurements, as compared to the true flaw lengths, is less than or equal to 0.75 inch. The length of base metal cracking is measured at the 75% through-base-metal position.	*(a)* The RMS error of the flaw length measurements, as compared to the true flaw lengths, is less than or equal to 0.75 inch. The length of base metal flaws is measured at the 75% through-base-metal position.
(b) All extensions of base metal cracking into the overlay material by at least 0.1 inch. are reported as being intrusions into the overlay material.	**This requirement is omitted.** **Basis**: The requirement for reporting all extensions of cracking into the overlay is omitted from the PDI Program because it is redundant to the RMS calculations performed in paragraph 3.2(c), and its presence adds confusion and ambiguity to depth sizing as required by paragraph 3.2(c). This also makes the weld overlay program consistent with the Supplement 2 depth sizing criteria.
(c) The RMS error of the flaw depth measurements, as compared to the true flaw depths, is less than or equal to 0.125 inch.	*(b)* The RMS error of the flaw depth measurements, as compared to the true flaw depths, is less than or equal to 0.125 inch.

ENCLOSURE 3

CNRO-2007-00010

LICENSEE-IDENTIFIED COMMITMENTS

LICENSEE-IDENTIFIED COMMITMENTS

COMMITMENT	TYPE (Check one)		SCHEDULED COMPLETION DATE
	ONE-TIME ACTION	CONTINUING COMPLIANCE	
1. Entergy will submit the following information to the NRC within fourteen (14) days from completing the final ultrasonic examinations of the completed weld overlays: • Weld overlay examination results including a listing of indications detected. • Disposition of all indications using the standards of ASME Section XI, IWB-3514-2 and/or IWB-3514-3 criteria and, if possible, the type and nature of the indications • A discussion of any repairs to the weld overlay material and/or base metal and the reason for the repairs.	✓		Within fourteen (14) days from completing the final ultrasonic examinations of the completed weld overlays
2. Entergy will also submit to the NRC a stress analysis summary demonstrating that the pressurizer and hot leg piping nozzles will perform their intended design functions after the weld overlay installation. The stress analysis report will include results showing that the requirements of NB-3200 and NB-3600 of the ASME Code, Section III are satisfied. The stress analysis will also include results showing that the requirements of IWB-3000 of the ASME Code, Section XI, are satisfied. The results will show that the postulated crack including its growth in the nozzles will not adversely affect the integrity of the overlaid welds. This information will be submitted to the NRC prior to entry into Mode 4 start-up from ANO-1's twentieth refueling outage (1R20).	✓		Prior to entry into Mode 4 start-up from 1R20