NUREG/CR-2401
EPRI NP-2015
WCAP-9973

PWR FLECHT SEASET Systems Effects Natural Circulation and Reflux Condensation

Task Plan Report
NRC/EPRI/Westinghouse Report No. 12

Prepared by E. R. Rosal, L. E. Hochreiter, T. S. Andreychek, N. Lee
S. D. Rupprecht, S. Wong, F. J. Kordalski, W. M. Kavalkovich
R. Anaglia, B. R. Sinwell, A. C. Wenzel.

Jointly Sponsored by
USNRC, EPRI, and Westinghouse

Prepared for
U.S. Nuclear Regulatory
Commission

NOTICE

This report was prepared as an account of work sponsored by an agency of the United States Government. Neither the United States Government nor any agency thereof, or any of their employees, makes any warranty, expressed or implied, or assumes any legal liability of responsibility for any third party's use, or the results of such use, of any information, apparatus, product or process disclosed in this report, or represents that its use by such third party would not infringe privately owned rights.

Availability of Reference Materials Cited in NRC Publications

Most documents cited in NRC publications will be available from one of the following sources:

1. The NRC Public Document Room, 1717 H Street, N.W.
   Washington, DC 20555
2. The NRC/GPO Sales Program, U.S. Nuclear Regulatory Commission,
   Washington, DC 20555
3. The National Technical Information Service, Springfield, VA 22161

Although the listing that follows represents the majority of documents cited in NRC publications, it is not intended to be exhaustive.

Referenced documents available for inspection and copying for a fee from the NRC Public Document Room include NRC correspondence and internal NRC memoranda; NRC Office of Inspection and Enforcement bulletins, circulars, information notices, inspection and investigation notices; Licensee Event Reports; vendor reports and correspondence; Commission papers; and applicant and licensee documents and correspondence.

The following documents in the NUREG series are available for purchase from the NRC/GPO Sales Program: formal NRC staff and contractor reports, NRC-sponsored conference proceedings, and NRC booklets and brochures. Also available are Regulatory Guides, NRC regulations in the *Code of Federal Regulations,* and *Nuclear Regulatory Commission Issuances.*

Documents available from the National Technical Information Service include NUREG series reports and technical reports prepared by other federal agencies and reports prepared by the Atomic Energy Commission, forerunner agency to the Nuclear Regulatory Commission.

Documents available from public and special technical libraries include all open literature items, such as books, journal and periodical articles, and transactions. *Federal Register* notices, federal and state legislation, and congressional reports can usually be obtained from these libraries.

Documents such as theses, dissertations, foreign reports and translations, and non-NRC conference proceedings are available for purchase from the organization sponsoring the publication cited.

Single copies of NRC draft reports are available free upon written request to the Division of Technical Information and Document Control, U.S. Nuclear Regulatory Commission, Washington, DC 20555.

Copies of industry codes and standards used in a substantive manner in the NRC regulatory process are maintained at the NRC Library, 7920 Norfolk Avenue, Bethesda, Maryland, and are available there for reference use by the public. Codes and standards are usually copyrighted and may be purchased from the originating organization or, if they are American National Standards, from the American National Standards Institute, 1430 Broadway, New York, NY 10018.

GPO Printed copy price: _____

FLECHT SEASET Program
NRC/EPRI/Westinghouse Report No. 12
NUREG/CR-2401
EPRI NP-2015
WCAP-9973

PWR FLECHT SEASET
SYSTEMS EFFECTS NATURAL CIRCULATION AND REFLUX CONDENSATION
TASK PLAN REPORT

February 1983

E. R. Rosal
L. E. Hochreiter
T. S. Andreychek
N. Lee
S. D. Rupprecht
S. Wong
F. J. Kordalski
W. M. Kavalkovich
R. Quaglia
B. R. Sinwell
A. C. Wenzel

prepared for

United States Nuclear Regulatory Commission
Washington, DC 20555

Electric Power Research Institute
3412 Hillview Avenue
Palo Alto, California 94303

and

Westinghouse Electric Corporation
Nuclear Energy Systems
P.O. Box 355
Pittsburgh, Pennsylvania 15230

by

Westinghouse Electric Corporation
under
Contract No. NRC-04-77-127, EPRI Project No. RP959-1

Program Management Group
NRC-L.H. Sullivan, R. Lee
EPRI-K. H. Sun, A. Singh
Westinghouse-H. B. Rosenblatt
Fin No. B6204

LEGAL NOTICE

This report was prepared as an account of work sponsored by the U.S. Nuclear Regulatory Commission, the Electric Power Research Institute, Inc., and the Westinghouse Electric Corporation. Neither the United States government nor any agency thereof, nor the Institute or members thereof, nor the Westinghouse Electric Corporation, nor any of their employes, makes any warranty, expressed or implied, or assumes any legal liability or responsibility for any third party's use or the results of such use of any information, apparatus, product, or process disclosed in this report or represents that its use by such third party would not infringe privately owned rights.

ABSTRACT

This report presents a descriptive plan of tests for the Systems Effects Task of the Full-Length Emergency Cooling Heat Transfer Systems Effects tests (FLECHT SEASET). This task is designed to produce experimental data which can be used to address issues related to natural circulation cooling modes in a pressurized water reactor (PWR). The natural circulation tests were planned in direct response to the accident at Three Mile Island. The tests consist of natural circulation and reflux condensation cooling experiments using electrical heating rods to simulate current nuclear core arrays of PWR and PWR fuel vendors. The FLECHT SEASET systems effects test facility with a scale factor of 1/307 with respect to a four-loop 3411 MWt PWR was used. The facility was designed with all elevations identical to those of a PWR. Two full-height steam generators with active secondary side heat removal are also part of the system design. All tests were conducted with a cosine axial power profile. The data obtained from these tests will be used to evaluate the effects of components and systems parameters during natural circulation cooling modes.

ACKNOWLEDGMENTS

The work of the following Westinghouse Nuclear Energy Systems contributors is hereby acknowledged:

TECHNOLOGY DEVELOPMENT
J. D. Cohen
D. G. Agate

SAFEGUARDS ENGINEERING
M. Y. Young
R. C. Howard
T. E. Sobek
A. Tong
D. P. Kitzmiller
K. F. McNamee
D. P. Remlinger
D. W. Sklarsky

TEST ENGINEERING AND OPERATIONS
D. P. Geisler
C. E. Conway
J. T. Martin
W. Hamilton
P. F. Orangio
F. L. Lilly
A. C. Toth
M. M. Valkovic

FOREST HILLS DRAFTING
P. Brumbaugh
J. Gaynord

EQUIPMENT TECHNICAL PLANNING INTEGRATION
N. F. Falgione, Jr.

FOREST HILLS PURCHASING
J. D. Kline, Jr.

FUNCTIONAL ANALYSIS
R. E. Sariscak

PUBLICATION PROGRAMS
J. G. Nagle

RESEARCH AND DEVELOPMENT CENTER
Dr. A. Pebler

The work of the following members of the Program Management Group, their colleagues, and their consultants is hereby acknowledged:

EPRI-K.H. Sun
NRC-RSR-L.H. Sullivan, R. Lee
NRC-NRR-W. Hodges, G. N. Lauben
EG&G-G. Wilson, D. M. Ogden
ITI-P.R. Davis

GLOSSARY

This glossary explains definitions, acronyms, and symbols included in the text which follows.

Analysis -- The examination of data to determine, if possible, the basic physical processes that occur and the interrelation of the processes. Where possible, physical processes will be identified from the data and will be related to first principles.

Average fluid conditions -- average thermodynamic properties (for example, enthalpy, quality, temperature, pressure) and average thermal-hydraulic parameters (for example, void fraction, mass flow rate) which are derived from appropriately reduced data for a specified volume or a specified cross-sectional area

Axial peaking factor -- ratio of the peak-to-average power for a given power profile

Blocked -- a situation in which the flow area in the rod bundle or single tube is purposely obstructed at selected locations so as to restrict the flow

Bottom of core recovery (BOCR) -- a condition at the end of the refill period in which the lower plenum is filled with injected ECC water as the water is about to flood the core

Bundle -- a number of heater rods, including spares, which are assembled into a matrix with CRG-type rods, using necessary support hardware to meet the Task Plan design requirements

Carryout -- same as carryover

Carryout rate fraction -- the fraction of the inlet flooding flow rate which flows out the rod bundle exit by upflowing steam

Carryover -- the process in which the liquid is carried in a two-phase mixture out of a control volume, that is, the test bundle

Computational methods -- the procedure of reducing, analyzing, and evaluating data or mathematical expressions, either by hand calculations or by digital computer codes

Computer code -- a set of specific instructions in computer language to perform the desired mathematical operations utilizing appropriate models and correlations

Computer data acquisition system (CDAS) -- the system which controls the test and records data for later reduction and analysis

Computer tape -- magnetic tapes that store FLECHT SEASET data

Core rod geometry (CRG) -- a nominal rod-to-rod pitch of 12.6 mm (0.496 inch) and outside nominal diameter of 9.50 mm (0.374 inch) representative of various nuclear fuel vendors' new fuel assembly geometries (commonly referred to as the 17x17 or 16x16 assemblies)

Correlation -- a set of mathematical expressions, based on physical principles and experimental data but resting primarily on experimental data, which describes the thermal-hydraulic behavior of a system

Cosine axial power profile -- the axial power distribution of the heater rods in the CRG bundle that contains the maximum (peak) linear power at the midplane of the active heated rod length. This axial power profile will be used on all FLECHT SEASET tests as a fixed parameter.

Data -- recorded information, regardless of form or characteristic, of a scientific or technical nature. It may, for example, document research, experimental, developmental, or engineering work, or be usable to define a design or process or to procure, produce, support, maintain, or operate material. The data may be graphic or pictorial delineations in media such as drawings or photographs, text in specifications or related performance or design type documents, or computer printouts. Examples of data include research and engineering data, engineering drawings and associated lists, specifications, standards, process sheets, manuals, technical reports, catalog item identifications and related information, computer programs, computer codes, computer data bases, and computer software documentation. The term data

does not include financial, administrative, cost and pricing, and management information or other information incidental to contract administration.

Data validation -- a procedure used to ensure that the data generated from a test meet the specified test conditions, and that the instrumentation was functioning properly during the test

Design and procurement -- the design of the system, including the specification (consistent with the appropriate Task Plan) of the material, component, and/or system of interest; and the necessary purchasing function to receive the material, component, and/or system on the test site. This does not preclude Contractor from constructing components and systems on the test site to meet requirements of the Task Plan.

ECC -- emergency core cooling

Entrainment -- the process by which liquid, typically in droplet form, is carried in a flowing stream of gas or two-phase mixture

Evaluation -- the process of comparing the data with similar data, other data sets, existing models and correlations, or computer codes to arrive at general trends, consistency, and other qualitative descriptions of the results

Fallback -- the process whereby the liquid in a two-phase mixture flows countercurrent to the gas phase

FLECHT -- Full-Length Emergency Core Heat Transfer test program

FLECHT SEASET -- Full-Length Emergency Core Heat Transfer - Systems Effects and Separate Effects Tests

FLECHT SET -- Full-Length Emergency Core Heat Transfer - Systems Effects Tests

Heat transfer mechanisms -- the process of conduction, convection, radiation, or phase changes (for example, vaporization, condensation, boiling) in a control volume or a system

Hypothetical -- conjectured or supposed. It is understood that this program is concerned with study of physical phenomena associated with reactor accidents that have an extremely low probability and are therefore termed hypothetical.

Loss-of-coolant accident -- a break in the pressure boundary integrity resulting in loss of core cooling water

Model -- a set of mathematical expressions generated from physical laws to represent the thermal-hydraulic behavior of a system. A model rests on physical principles.

PMG -- Program Management Group

Pressurized water reactor (PWR) -- a nuclear reactor type in which the system pressure exceeds saturation pressure, thus preventing gross vapor formation under normal operating conditions

Reduce data -- convert data from the measured signals to engineering units. In some cases the data are manipulated in a simple fashion to calculate quantities such as flows.

Separation -- the process whereby the liquid in a two-phase mixture is separated and detached from the gas phase

Silicon-controlled rectifier (SCR) -- a rectifier control system used to supply dc current to the bundle heater rods

Spacer grids -- the metal matrix assembly (egg crate design) used to support and space the heater rods in a bundle array

Test section -- lower plenum, bundle, and upper plenum

Test site -- the location of the test facilities where tests will be conducted

Transducer -- the devices used in experimental systems that sense the physical quantities, such as temperature, pressure, pressure difference, or power, and transform them into electrical outputs, such as volts

Unblocked -- the situation in which the flow area in the rod bundle or a single tube is not purposely obstructed

TABLE OF CONTENTS

Section	Title	Page
1	SUMMARY	1-1
2	BACKGROUND AND TASK OBJECTIVES	2-1
	2-1. Background	2-1
	2-2. Task Objectives	2-1
3	DATA REQUIREMENTS	3-1
4	SCALING	4-1
	4-1. Introduction	4-1
	4-2. Different Scaling Approaches	4-5
	4-3. Pressure Effects and Scaling for FLECHT SEASET Tests	4-14
	4-4. Scaling Conclusions	4-26
5	TEST PARAMETER RANGES AND REFERENCE CONDITIONS	5-1
6	TEST FACILITY DESCRIPTION	6-1
	6-1. Facility Layout	6-1
	6-2. Facility Component Description	6-5
	6-3. Test Section	6-5
	6-4. Upper Plenum	6-5
	6-5. Upper Core Plate	6-28
	6-6. Test Bundle	6-28
	6-7. Ground Plate (Fuel Nozzle Simulator)	6-36
	6-8. Steam Generators	6-36
	6-9. Unbroken Loop Steam Generator	6-36
	6-10. Broken Loop Steam Generator	6-42

TABLE OF CONTENTS (cont)

Section	Title	Page
	6-11. Steam Generator Secondary Side Cooling System	6-42
	6-12. Downcomer, Downcomer Extension, and Lower Plenum Crossover Leg	6-59
	6-13. Loop Piping	6-60
	6-14. Pressurizer	6-64
	6-15. Cold Leg and UHI Coolant Injection System	6-64
	6-16. Boiler	6-64
6-17.	General Instrumentation Description	6-65
6-18.	Data Acquisition System	6-66
	6-19. Computer Data Acquisition System (CDAS)	6-68
	6-20. Data Logger	6-68
	6-21. Multiple-Pen Stripchart Recorders	6-99
6-22.	Facility Operation	6-99
	6-23. Instrumentation Plan	6-103
	6-24. Rod Bundle Instrumentation	6-103
	6-25. Thimble Instrumentation	6-104
	6-26. Steam Probe Instrumentation	6-113
	6-27. Power Measurements	6-114
	6-28. Housing Instrumentation	6-114
	6-29. Lower Plenum Instrumentation	6-119
	6-30. Upper Plenum Instrumentation	6-119
	6-31. Hot Leg Instrumentation	6-120
	6-32. Steam Generator Instrumentation	6-129
	6-33. Pump Loop Seal Loop Instrumentation	6-136
	6-34. Cold Leg Instrumentation	6-136
	6-35. Downcomer Instrumentation	6-137
	6-36. Crossover Leg Instrumentation	6-137
	6-37. Accumulator Instrumentation	6-137
	6-38. Noncondensible Gas Injection System Instrumentation	6-138

TABLE OF CONTENTS (cont)

Section	Title	Page
	6-39. Balance of Loop Instrumentation	6-138
	6-40. Noncondensible Gas Sampling System Instrumentation	6-139
	6-41. Data Validation Criteria and Procedures	6-145
7	TEST MATRIX	7-1
	7-1. Introduction	7-1
	7-2. Shakedown Test Matrix	7-1
	7-3. Thermocouple Wiring Connection Checks	7-1
	7-4. Heater Rod Power Connection Check	7-2
	7-5. Instrumented Heater Rod Radial Location and Corresponding Thermocouple Checks	7-2
	7-6. Heater Rod, Thimble, and Steam Probe Thermocouple Axial Location Checks	7-2
	7-7. Steam Generator Thermocouple Axial Location Checks	7-3
	7-8. Rod Bundle Housing Differential Pressure Cell Axial Location Checks; Steam Generator Plenum, Downcomer, Upper Plenum, and Accumulator Volume and Level Transmitter Checks; and Component Volume Checks	7-3
	7-9. Pressure Transmitter and Differential Pressure Cell Zero Shifts	7-3
	7-10. Loop Primary Side Filling Procedure and System Volume Checks	7-3
	7-11. Liquid Flowmeter Calibration Checks	7-4
	7-12. Hot and Cold Leg Liquid Film Flowrate Rate Meter Checks	7-4

TABLE OF CONTENTS (cont)

Section	Title	Page
7-13.	Test Loop Hydraulic Loss Coefficient Measurements	7-4
7-14.	Loop Heatup and Heat Loss Check	7-4
7-15.	Isothermal Calibration of Steam Generator Bundle Thermocouples	7-4
7-16.	Saturation of Primary Side Water With Noncondensibles and Sampling System Checks	7-5
7-17.	Noncondensibles Injection Checks	7-5
7-18.	System Pressure Relief Checks	7-5
7-19.	Accumulator No. 1 Gas Overpressure Feed-and-Bleed System Checks	7-5
7-20.	Cold Leg Injection Checks	7-6
7-21.	UHI Injection Checks	7-6
7-22.	Steam Generator Secondary Side Cooling System Flowmeter Calibration Checks	7-6
7-23.	Steam Generator Secondary Side Boiling Mode at Constant Level, Boiloff (Drying), and Recovery Checks	7-6
7-24.	Single-Phase, Two-Phase, and Reflux Condensation Shakedown Test	7-6
7-25.	Forced Convection Secondary Side Film Coefficient Calibration Test	7-7
7-26.	Natural Circulation and Reflux Condensation Test Matrix	7-7
7-27.	Test No. 1 - Single-Phase Natural Circulation Reference Test	7-8
7-28.	Test No. 2 - Single-Phase Natural Circulation as a Function of Bundle Power	7-13

TABLE OF CONTENTS (cont)

Section	Title	Page
7-29.	Test No. 3 - Single-Phase Natural Circulation, Increased Heat Sink Capacity Effect	7-15
7-30.	Test No. 4 - Single-Phase Natural Circulation, Reduced Heat Sink Capacity Effect	7-16
7-31.	Test No. 5 - Single-Phase Natural Circulation, Cold Leg Injection Effects	7-17
7-32.	Test No. 6 - Single-Phase Natural Circulation, Effect of Noncondensible Gas Injection Into Both Hot Legs	7-19
7-33.	Test No. 7 - Single-Phase Natural Circulation, Noncondensible Gas Injection Effect (Broken Loop Only)	7-21
7-34.	Test No. 8 - Single-Phase, Two-Phase, and Reflux Transient Test at Constant Pressure	7-22
7-35.	Test No. 9 - Single-Phase, Two-Phase, and Reflux Transient Test With Variable Steam Generator Heat Transfer Area and Recovery	7-25
7-36.	Test No. 10 - Single-Phase, Two-Phase, and Reflux Condensation Transient With UHI Simulation	7-27
7-37.	Test No. 11 - Two-Phase Natural Circulation, Cold Leg Injection Effects	7-30
7-38.	Test No. 12 - Reflux Mode, Cold Leg Injection Effect to Recovery of Single-Phase Natural Circulation Mode	7-31

TABLE OF CONTENTS (cont)

Section	Title	Page
	7-39. Test No. 13 - Two-Phase Natural Circulation, Noncondensible Gas Injection Effects	7-32
	7-40. Test No. 14 - Single-Phase Natural Circulation With Minimum Secondary Side Heat Sink	7-33
	7-41. Test No. 15 - Reflux Mode, Noncondensible Gas Injection Effects	7-33
	7-42. Test No. 16 - Two-Phase Flow Natural Circulation Heat Sink Increase Effect	7-34
	7-43. Test No. 17 - Two-Phase Flow Natural Circulation Heat Sink Reduction Effect	7-35
	7-44. Test No. 18 - Reflux Condensation Mode Heat Sink Increase Effect	7-36
	7-45. Test No. 19 - Reflux Condensation Mode Heat Sink Reduction Effect	7-37
	7-46. Test No. 20	
8	DATA REDUCTION, ANALYSIS, AND EVALUATION PLANS	8-1
	8-1. Natural Circulation and Reflux Condensation Data Reduction	8-1
	8-2. Data Analysis and Evaluation	8-10
	8-3. Predictive Model for FLECHT SEASET Natural Circulation Tests	8-10
9	TASK SCHEDULE	9-1
Appendix A	WORK SCOPE	A-1
Appendix B	FLOW RESISTANCE CALCULATIONS	B-1

TABLE OF CONTENTS (cont)

Section	Title	Page
Appendix C	REVIEW OF TEST PARAMETER RANGES	C-1
Appendix D	UPPER PLENUM DESIGN ASPECTS	D-1
Appendix E	FACILITY DRAWINGS	E-1
Appendix F	INSTRUMENTATION PLAN	F-1
Appendix G	NATURAL CIRCULATION AND REFLUX CONDENSATION TEST RUN SPECIFICATION AND VALIDATION SHEET	G-1
Appendix H	SHAKEDOWN TEST MATRIX DETAILS	H-1

LIST OF ILLUSTRATIONS

Figure	Title	Page
4-1	Westinghouse Reactor Coolant Loop Configuration and Calculated Worst Break Location (Large Cold Leg Break)	4-2
4-2	Combustion Engineering Reactor Coolant Loop Configuration and Calculated Worst Break Location (Large Cold Leg Break)	4-3
4-3	Babcock and Wilcox Reactor Coolant Loop Configuration and Calculated Worst Break Location (Large Cold Leg Break)	4-4
4-4	Calculation of Flow Regime Transition Points for PWR and FLECHT SEASET Facility	4-24
4-5	Critical Velocities for Tubesheet Flooding	4-27
6-1	FLECHT SEASET Systems Effect Natural Circulation and Reflux Condensation Test Facility	6-2
6-2	FLECHT SEASET Natural Circulation Piping Layout	6-3
6-3	FLECHT SEASET Natural Circulation Test Section Assembly (4 sheets)	6-13
6-4	FLECHT SEASET Natural Circulation Low Mass Housing	6-21
6-5	FLECHT SEASET Natural Circulation Bundle Cross Section	6-23
6-6	FLECHT SEASET Natural Circulation Lower Plenum	6-25
6-7	FLECHT SEASET Natural Circulation Upper Plenum (3 sheets)	6-29

LIST OF ILLUSTRATIONS (cont)

Figure	Title	Page
6-8	Upper Plenum Hot Leg Nozzle and Internal Column Arrangement	6-35
6-9	FLECHT SEASET Natural Circulation Upper Core Plate	6-37
6-10	FLECHT SEASET Natural Circulation Single-Ended Heater Rod Design	6-39
6-11	FLECHT SEASET Natural Circulation Rod Bundle Ground Plate	6-43
6-12	FLECHT SEASET Natural Circulation Unbroken Loop Steam Generator Construction Details (2 sheets)	6-45
6-13	FLECHT SEASET Natural Circulation Unbroken Loop Steam Generator Modified Plenum	6-49
6-14	FLECHT SEASET Natural Circulation Unbroken Loop Steam Generator Construction Details (2 sheets)	6-51
6-15	FLECHT SEASET Natural Circulation Broken Loop Steam Generator Modified Plenum	6-55
6-16	FLECHT SEASET Natural Circulation Steam Generator Secondary Side Cooling System	6-57
6-17	FLECHT SEASET Natural Circulation Downcomer, Downcomer Extension, and Turbo-Probe Spool	6-61
6-18	FLECHT SEASET Natural Circulation Computer Hardware Interface	6-67

LIST OF ILLUSTRATIONS (cont)

Figure	Title	Page
6-19	FLECHT SEASET Natural Circulation Facility Instrumentation Schematic Diagram (2 sheets)	6-69
6-20	FLECHT SEASET Natural Circulation Rod Bundle Instrumentation	6-105
6-21	FLECHT SEASET Natural Circulation Rod Bundle Thermocouple Locations	6-107
6-22	FLECHT SEASET Natural Circulation Instrumented Thimbles	6-109
6-23	FLECHT SEASET Natural Circulation Rod Bundle Aspirating Steam Probe	6-111
6-24	FLECHT SEASET Natural Circulation Rod Bundle Bare Thermocouple Steam Probe	6-115
6-25	FLECHT SEASET Natural Circulation Rod Bundle Heated Thermocouple Steam Probe	6-117
6-26	FLECHT SEASET Natural Circulation Hot and Cold Leg Fluid Thermocouple Support Fixture	6-121
6-27	FLECHT SEASET Natural Circulation Insulation Thermocouple Support Fixture 6-123	
6-28	FLECHT SEASET Natural Circulation Unbroken Loop Steam Generator Instrumentation Fluid and Tube Wall Thermocouples	6-125

LIST OF ILLUSTRATIONS (cont)

Figure	Title	Page
6-29	FLECHT SEASET Natural Circulation Unbroken Loop Steam Generator Instrumentation Steam and Pressure Probes	6-127
6-30	FLECHT SEASET Natural Circulation Broken Loop Steam Generator Instrumentation Fluid and Tube Wall Thermocouples	6-131
6-31	FLECHT SEASET Natural Circulation Broken Loop Steam Generator Instrumentation Steam and Pressure Probes	6-133
6-32	FLECHT SEASET Natural Circulation Noncondensible Gas Sampling System	6-140
6-33	FLECHT SEASET Natural Circulation Unbroken Loop Steam Generator Noncondensible Gas Sampling Locations	6-141
6-34	FLECHT SEASET Natural Circulation Broken Loop Steam Generator Noncondensible Gas Sampling Locations	6-143
8-1	Logical Sequencing of Computer Codes	8-9

LIST OF TABLES

Table	Title	Page
3-1	FLECHT SEASET Natural Circulation and Reflux Condensation Tests Basic Data To Be Obtained	3-2
4-1	Comparison of Vendor Designs	4-6
4-2	Comparison of PWR Scaled Flow Areas and Systems Effects Test Flow Areas	4-9
4-3	Comparison of PWR and Systems Effects Test Lengths and Flow Resistances	4-10
4-4	Influence of Pressure on Single-Phase Heat Transfer and Temperature Rise	4-17
5-1	Reference Test Conditions for Natural Circulation and Reflux Condensation Tests	5-2
5-2	Range of Initial Test Conditions for FLECHT SEASET Natural Circulation and Reflux Condensation Tests	5-4
6-1	FLECHT SEASET Natural Circulation and Reflux Condensation Systems Effects Test Facility Component Dimensions	6-7
6-2	FLECHT SEASET Natural Circulation and Reflux Condensation Thermophysical Properties of Heater Rod Materials	6-41
6-3	FLECHT SEASET Natural Circulation and Reflux Condensation Tests - Overall Instrumentation List	6-73

LIST OF TABLES (cont)

Table	Title	Page
6-4	FLECHT SEASET Natural Circulation and Reflux Condensation Tests CDAS Instrumentation List	6-78
6-5	FLECHT SEASET Natural Circulation and Reflux Condensation Tests Stripchart Recorder Instrumentation Channel List	6-100
6-6	FLECHT SEASET Natural Circulation and Reflux Condensation Tests Elevation of Thermocouples on Instrumented Thimbles	6-108
6-7	FLECHT SEASET Natural Circulation and Reflux Condensation Tests Azimuthal Orientation of Instrumented Thimble Thermocouples	6-108
6-8	FLECHT SEASET Natural Circulation and Reflux Condensation Tests Steam Generator ΔT Measurements	6-135
6-9	FLECHT SEASET Natural Circulation and Reflux Condensation Tests - Minimum Instrumentation Requirements for a Valid Test	6-147
7-1	FLECHT SEASET Natural Circulation and Reflux Condensation Test Matrix	7-9
8-1	Data Analysis and Reduction Codes	8-3
8-2	Information Derived From Basic FLECHT SEASET Natural Circulation and Reflux Condensation Test	8-7

LIST OF TABLES (cont)

Table	Title	Page
9-1	FLECHT SEASET Systems Effects Task Major Milestones	9-2

SECTION 1

SUMMARY

As part of the NRC/EPRI/Westinghouse Full-Length Emergency Cooling Heat Transfer Separate Effects and Systems Effects Test (FLECHT SEASET) heat transfer and hydraulic program,[1] a series of natural circulation tests were conducted on a test facility whose dimensions are scaled to those of current PWRs with a scale factor of 1/307. The purpose of these tests is to identify hydraulic and heat transfer phenomena during natural circulation, to provide a data base for code assessment, and to evaluate the results obtained in other scaled natural circulation tests.

Thermal-hydraulic phenomena such as reflux condensation and natural circulation have received increased interest because of the Three Mile Island (TMI) accident, and can be effectively studied in the FLECHT SEASET facilities.

This document describes the data requirements, instrumentation plan, facility description, test matrix, and methods of data reduction and analysis for Task 3.2.7, Natural Circulation Cooling Task, in the FLECHT SEASET program.

In this program, the existing FLECHT facility[2] was modified to accept a new heater rod bundle whose dimensions are more typical of the PWR fuel rod array sizes currently in use by PWR vendors, and an upper plenum more typical of present PWR upper plenum geometries.

Sufficient instrumentation was installed in the test facility that mass and energy balances can be computed from the data. In addition, the instrumentation was developed to allow the calculation of average thermal-hydraulic conditions in the system. This information can be used to develop or verify thermal-hydraulic natural circulation models.

---

1. Conway, C. E., et al., "PWR FLECHT Separate Effects and Systems Effects Test (SEASET) Program Plan," NRC/EPRI/Westinghouse-1, December 1977.

2. Cleary, W. F., et al., "FLECHT-SET Phase B System Design Description," WCAP-8410, October 1974.

SECTION 2

BACKGROUND AND TASK OBJECTIVES

2-1. BACKGROUND

Since the Three Mile Island accident, an increased interest has developed in different long-term postaccident cooling modes. Cooling modes of primary interest are single-phase natural circulation, two-phase flow natural circulation, and reflux condensation circulation. The FLECHT SEASET systems effects test facility offers the capability to conduct natural circulation tests, since the elevations are maintained at full height and the primary system is power/volume scaled, with a scale factor of 1/307, such that the proper heat sources and sinks exist in the facilities.

In addition, one of the unique advantages of this facility is the extensive instrumentation available in the steam generators, which can provide detailed characterization of their behavior during various natural circulation cooling modes.

As with any scaled test program, some compromises exist. These scaling compromises are identified in this document and, where possible, suggested actions to address this concern are discussed. It is believed, however, that regardless of scaling effects, the proposed tests will add significantly to an understanding of the thermal-hydraulics of reflood, reflux boiling (condensation), and natural circulation, and should be pursued as part of the FLECHT SEASET program.

2-2. TASK OBJECTIVES

The objectives of the natural circulation tests in the systems test facility are as follows:

-- To provide a single-phase and two-phase natural circulation data base over a range of rod bundle powers such that natural circulation calculations can be verified

-- To examine core cooling transitions between single-phase, two-phase, and reflux condensation

-- To examine system response and stability in a two-phase or reflux condensation mode, and in particular, characterize the steam generator behavior in these cooling modes

SECTION 3

DATA REQUIREMENTS

Data requirements are determined by the task objectives presented in paragraph 2-2 of this report and by contract commitments as presented in the work scope for the Systems Effects Task (appendix A). In order to meet the task objectives, test facility instrumentation must be designed to provide sufficient data for calculating the following:

-- Mass and energy balances around each loop component

-- Global and local thermal-hydraulic conditions to assess models used to interpret natural circulation phenomena, and to identify flow and heat transfer regimes during natural circulation and reflux condensation cooling modes

Table 3-1 summarizes the basic data which had to be obtained, using instrumentation that would allow the above calculations to be made and hence accomplish task objectives and task work scope. A more detailed description of bundle and system instrumentation is presented in section 6.

TABLE 3-1

FLECHT SEASET NATURAL CIRCULATION AND REFLUX CONDENSATION TESTS
BASIC DATA TO BE OBTAINED

Desired Data	Means of Measurement	Location
Cladding temperature	Heater rod thermocouples	Inside surface of heater rod cladding at various axial and radial bundle elevations
Fluid temperatures	Fluid thermocouples, heated thermocouples, and bare thermocouples	Injection lines; test section plena; and bundle at various elevations: downcomer, crossover pipe, steam generator inlet and outlet plena; tube primary side and secondary side at various elevations; broken and unbroken cold legs; and accumulators
Housing temperatures	Wall thermocouples	Housing and plenum outside surfaces
Steam generator temperatures	Wall thermocouples	Steam generator plena, tubesheet, tubes, and shell surfaces at various elevations
Piping and other component temperatures	Wall thermocouples	Downcomer, crossover pipe, injection lines, hot legs, cold legs, at various elevations
Injection flow rates	Turbine meter and rotameters	Injection lines, both gas and liquid
Reflux flow	Rotameter	Hot legs just before the hot leg test vessel
Test section flows	Bidirectional turbo-probe	Crossover pipe

TABLE 3-1 (cont)

FLECHT SEASET NATURAL CIRCULATION AND REFLUX CONDENSATION TESTS
BASIC DATA TO BE OBTAINED

Desired Data	Means of Measurement	Location
Static pressures	Static pressure transducers	Test section upper plenum, steam generator secondary side, downcomer extension, steam generator secondary side orifice flowmeters, accumulators, cold leg, UHI, and gas injection lines
Rod bundle ΔP	DP cells	Every 0.30m (12 in.) along the axial length of rod bundle, overall ΔP across the 3.66 m (144 in.) length of the bundle
Levels	DP cells	Downcomer; test section upper plenum at various elevations and overall; steam generator inlet and outlet plenums, primary side inlet tubes at various elevations, and overall secondary side; accumulators; hot leg risers; and pump loop seal downhill legs
ΔP across components	DP cells	Crossover pipe, test section upper plenum to top of downcomer, overall broken and unbroken hot legs, steam generator inlet to outlet plenums, overall broken and unbroken cold legs test section ground plate; upper core plate; steam generator secondary side flow orifice plate flowmeters; and cold leg injection location

SECTION 4

SCALING

4-1. INTRODUCTION

The FLECHT SEASET systems effects test facility was originally designed for low-pressure reflood systems effects testing. The nominal design of the facility was for 0.41 MPa (60 psia), which would be representative of a high-pressure PWR containment during the calculated reflood transient. However, when the Three Mile Island accident occurred, the priority of testing was rearranged and it was desired to modify the test facility to investigate natural circulative cooling modes typical of a small-break loss-of-coolant accident. The small-break transients of interest, however, are at much higher pressures [4.1 to 8.3 MPa (600 to 1200 psia)] than the FLECHT SEASET test facility was designed for. Therefore, lower-pressure effects of the FLECHT SEASET tests must be considered as well as scaling effects of the test apparatus.

The basic approach in scaling the FLECHT SEASET facility was to make it a scaled simulation of a 4 x 4, 3425 MWt Westinghouse PWR to the fullest extent possible. This Westinghouse plant has many characteristics which are similar to the other PWR vendors' four-loop designs, such as core, upper plenum, downcomer, ECC injection location, and core power distribution. The other PWR designs do have different loop configurations and/or steam generator designs than the Westinghouse design. These differences in loop design are shown in figures 4-1 through 4-3. The Westinghouse four-loop design (4 x 4) uses four hot legs, four steam generators, four reactor coolant pumps, and four cold legs returning to the vessel. The Westinghouse design uses U-tube steam generators. The Combustion Engineering (CE) and Babcock and Wilcox (B&W) designs use two hot legs feeding two steam generators with four reactor coolant pumps and four cold legs returning to the vessel (2 x 4 configuration). The CE design uses U-tube steam generators; B&W uses once-through steam generators. The following paragraphs discuss the differences between the Westinghouse 3425 MWt PWR and the Combustion Engineering 3817 MWt and Babcock and Wilcox 3820 MWt designs.

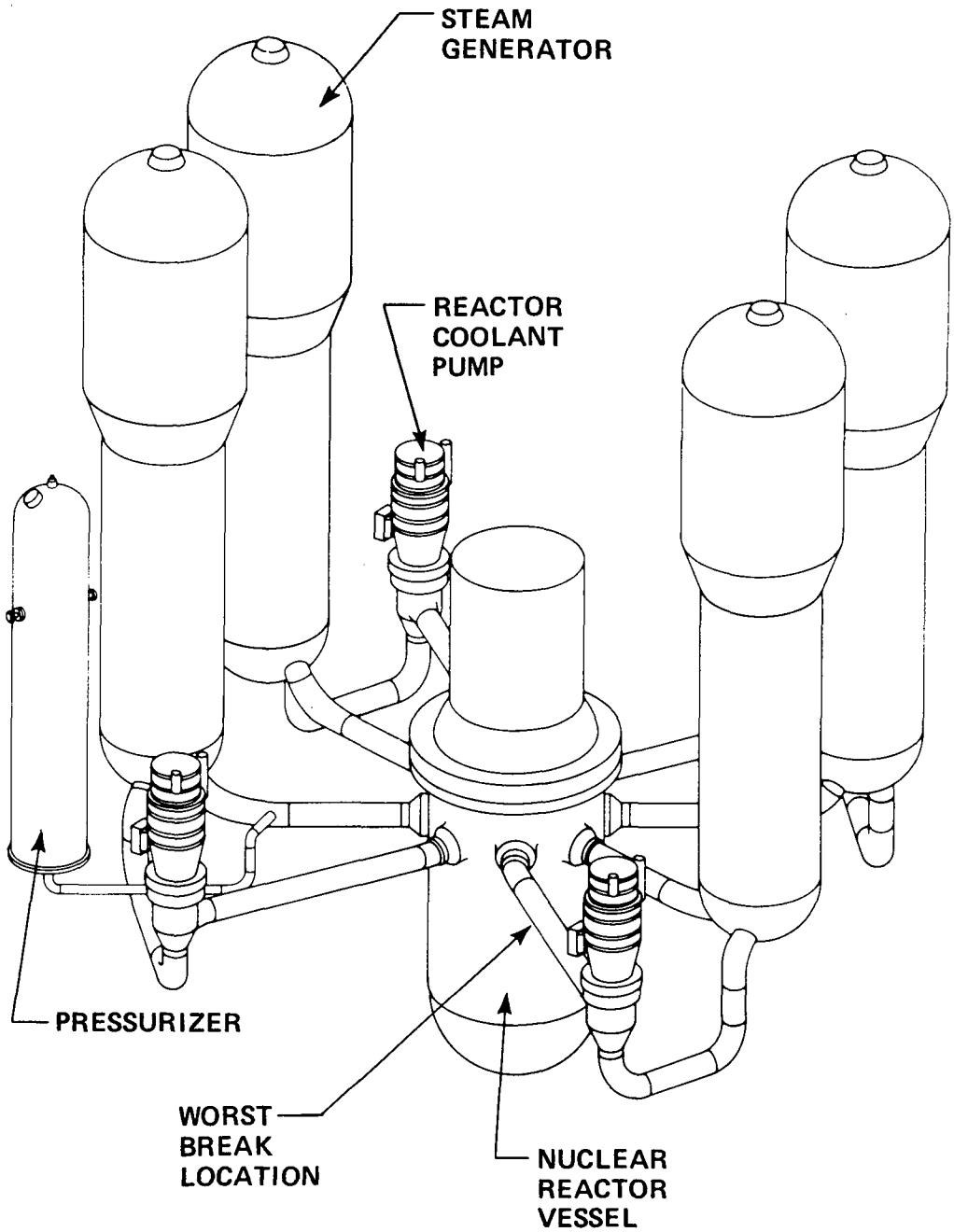

Figure 4-1. Westinghouse Reactor Coolant Loop Configuration and Calculated Worst Break Location (Large Cold Leg Break)

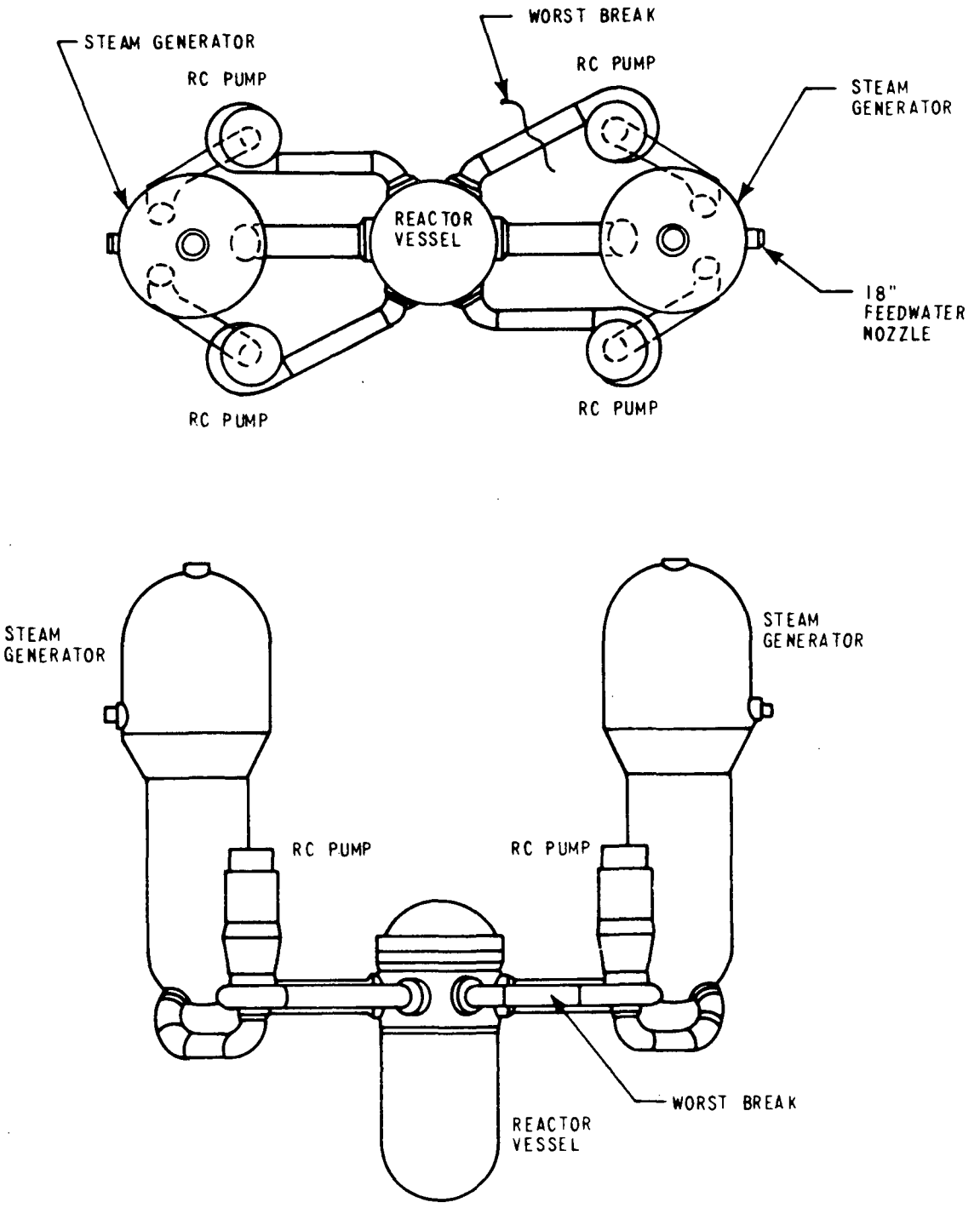

Figure 4-2. Combustion Engineering Reactor Coolant Loop Configuration and Calculated Worst Break Location (Large Cold Leg Break)

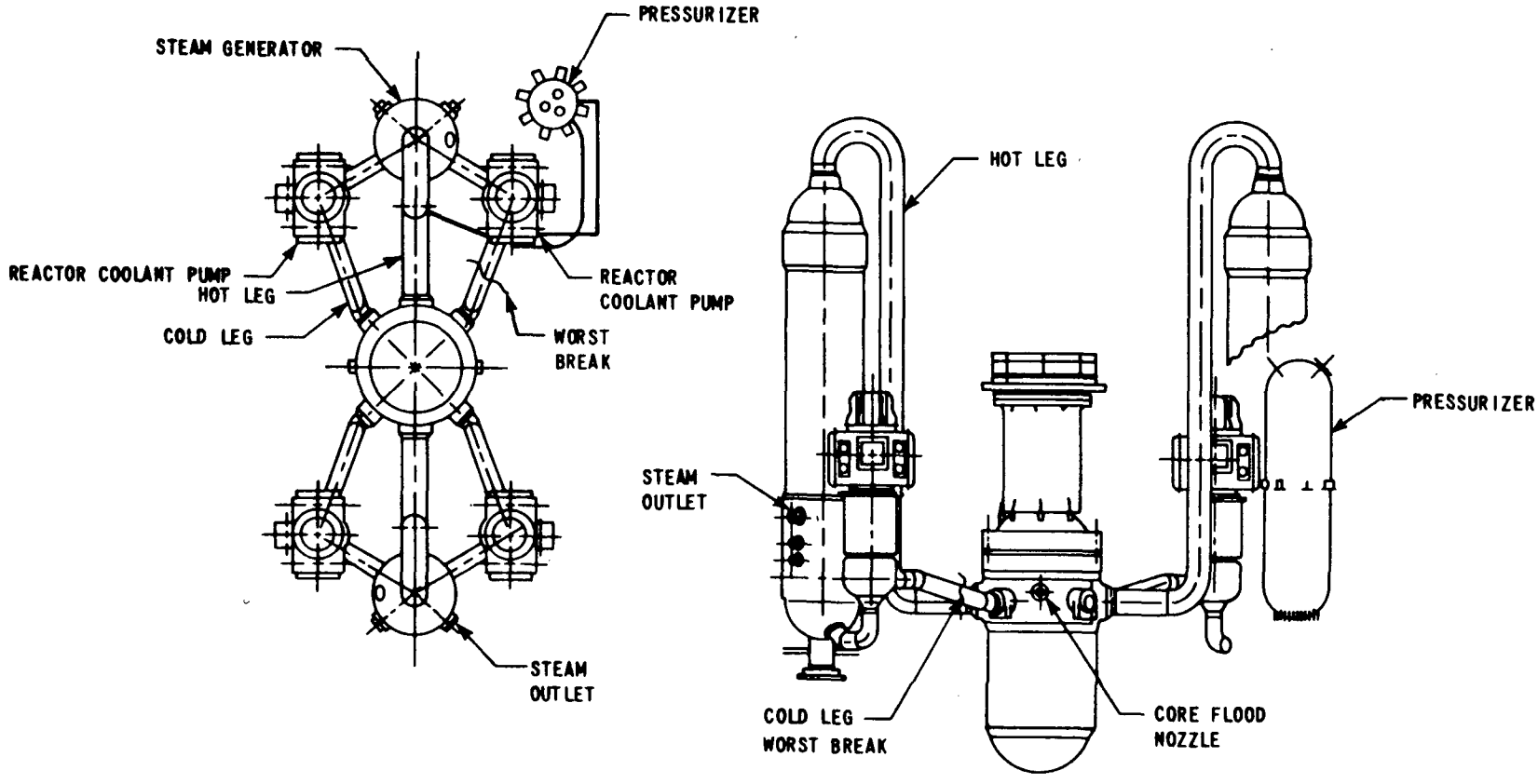

Figure 4-3. Babcock & Wilcox Reactor Coolant Loop Configuration and Calculated Worst Break Location (Large Cold Leg Break)

The cold leg pipe sizes of the CE and B&W designs are close to those of a Westinghouse PWR. Diameters and flow areas are given in table 4-1. The area scaling differences for a CE and B&W design are 19 and 4 percent, respectively.

The differences in the loop seal length between the Westinghouse, CE, and B&W designs would affect the flow resistance when the loop seal is empty. This change in flow resistance can be accounted for by analytical techniques. The scaled flow area differences are 6.7 percent less flow area for the CE design and 6.5 percent more for the B&W design (table 4-1).

The scaling requirements to preserve flow regimes, physical parameters, and physical phenomena are not necessarily compatible. Therefore, it is necessary to make compromises to best meet the objectives of the program. Since these tests are not a demonstration, they need not include all details of a prototypical PWR response to a hypothetical accident so long as the results are representative of the basic phenomena which could occur.

4-2. DIFFERENT SCALING APPROACHES

Most of the FLECHT SEASET reflood systems effects test facility had been designed and some of it had been constructed before the decision was made to investigate small-break, loss-of-coolant, and natural circulation cooling modes. Therefore, the original facility scaling logic for reflood tests had to be examined to see if it was still valid for small-break accident simulation.

Originally, in the FLECHT Systems Effects Tests Programs,[1] different scaling rationales were examined to determine the appropriate basis for the reflood systems effects tests. Linear scaling and volume scaling were examined. Using linear scaling, a model of the prototype would have the thermal hydraulic pressures occurring on a reduced time scale relative to the prototype. Linear scaling was investigated for the

1. Cadek, F. F., et al., "PWR FLECHT Systems Effects Tests Program Plan," WCAP-7906, April 1972.

TABLE 4-1

COMPARISON OF VENDOR DESIGNS

	Westinghouse[a]	Combustion Engineering[b]	Babcock & Wilcox[c]
Cold leg piping			
Diameter [m (in.)]	0.698 (27.5)	0.76 (30)	0.71 (28)
Area [m^2 (ft^2)]	0.3832 (4.125)	0.46 (4.9)	0.397 (4.27)
Scaled flow area [m^2 (ft^2)]	0.00124 (0.0134)	0.00148 (0.0159)	0.00129 (0.0139)
Percent difference[e]	--	(18.7)	3.7
Loop seal piping			
Diameter [m (in.)]	0.79 (31)	0.76 (30)	0.81 (32)
Area [m^2 (ft^2)]	0.487 (5.24)	0.456 (4.91)	0.518 (5.58)
Height [m (ft)]	2.7 (9.0)	1.8 (6.0)	3.26 (10.7)
Scaled flow area [m^2 (ft^2)]	0.00158 (0.0170)	0.00148 (0.0159)	0.00168 (0.0181)
Percent difference[e]	--	-6.5	6.5
Hot leg piping			
Diameter [m (in.)]	0.74 (29)	1.07 (42)	0.97 (38)
Area [m^2 (ft^2)]	0.426 (4.59)	0.894 (9.62)	0.331 (7.87)
Scaled flow area [m^2 (ft^2)]	0.00138 (0.0149)	0.00291 (0.0313)	0.00238 (0.0256)
Percent difference[e]	--	110.1	71.8

a. 4 x 4 3425 MWt PWR
b. 2 x 4 3817 MWt System 80 design
c. 2 x 4 3820 MWt 205 design
d. Based on scaling ratio of 307:1
e. Percent change from Westinghouse scaled area

Semiscale facility.[1] It was decided that this would distort the geometry of the test facility since the lengths, areas, and volumes would scale as SF, $(SF)^2$, and $(SF)^3$ where SF is the scale factor. In the Semiscale core, the loop would have been so small that it would have been difficult (if not impossible) to build and instrument, and several scaling violations would have existed out of design necessity. A similar conclusion was also reached in the LOFT scaling study.[2]

The results of the Semiscale study, the original FLECHT SEASET program plan, and the LOFT scaling study all confirmed that the most prototypical system response would be obtained with a volume-scaled test facility in which the lengths of the piping and loop were the same as those of the prototype. Following the Semiscale approach, volume scaling results in

$$\frac{L_m}{L_p} = L^* = 1 = \text{length scale factor} \tag{4-1}$$

$$\frac{q'''_m}{q'''_p} = q^* = 1 = \text{volumetric heat generation scale factor} \tag{4-2}$$

where

L_m = model length
L_p = prototype length
q'''_m = model volumetric heat generation rate
q'''_p = prototype volumetric heat generation rate

Setting L* equal to 1 means that lengths, velocities, and accelerations should be the same in the model and prototype (assuming the same fluid physical properties). Since

1. Larsen, T. K., et al., "Scaling Criteria and an Assessment of Semiscale Mod-3 Scaling for Small-Break Loss-of-Coolant Transients," EGG-SEMI-5121, March 1980.

2. Ybarrondo, L. J., et al., "Examination of LOFT Scaling," ASME Winter Meeting, New York, NY, 1974.

the pressure and temperature range of the FLECHT SEASET tests is different from the prototype small-break conditions, the velocities and accelerations will not be precisely preserved for all phases of natural circulation cooling. This aspect is carefully described in paragraph 4-3.

Using equation (4-1) for the volume ratio of the system, then

$$\frac{V_m}{V_p} = \frac{A_m}{A_p}\left(\frac{L_m}{L_p}\right)^{1} = \frac{A_m}{A_p} = A^* \tag{4-3}$$

which is the area ratio. Thus, when the flow path lengths in the model are kept the same as those of the prototype to preserve the real-time aspect of the experiment, the flow areas are reduced by the scale factor. Therefore, the pressure drop per unit length will be higher in the model compared to the prototype, and the pressure drop distribution around the simulated reactor coolant loop will be different in the model compared to a PWR reactor coolant system. In the FLECHT SEASET scaled model, the pressure drop distribution could not be preserved; however, the overall loop pressure drop and the pressure drop between major components was preserved using removable orifice plates. The cause of the largest pressure drop in the reactor loop is the pump; in the test, the cause of the largest pressure drop was the wall friction. Table 4-2 compares the PWR and FLECHT SEASET flow areas, and table 4-3 compares the relative resistances for the simulated reactor coolant loop in the FLECHT SEASET facility and in the PWR if volume scaling is used.

Equation (4-2) indicates that the volumetric heat generation rate would be the same in the model as in the prototype. Again following the Semiscale approach,

$$\frac{q_m}{q_p} = \frac{q_m''' V_m}{q_p''' V_p} = \frac{A_m L_m}{A_p L_p} = \frac{A_m}{A_p} = A^* \tag{4-4}$$

since $L_m/L_p = 1$, where A^* is the scale factor for the flow area and it is equal to the power ratio.

TABLE 4-2

COMPARISON OF PWR SCALED FLOW AREAS AND SYSTEMS EFFECTS TEST FLOW AREAS[a]

Component	Flow Area [m^2 (ft^2)]			FLECHT SEASET Pipe Size	Pipe ID [cm (in.)]	Flow Area Ratio (FS/PWR Scaled)
	PWR	PWR Scaled	FLECHT SEASET			
Core	4.76 (51.2)	0.01548 (0.1665)	0.01548 (0.1665)	0.0508 cm (0.0200 in.) wall	19.36 (7.625)	1.0
Lower plenum	11.098 (119.46)	0.0361 (0.3891)				
Upper plenum	11.098 (119.46)	0.0361 (0.3891)	0.3880 (0.4176)[b] 0.3238 (0.3485)[c]	25 cm (10 in.) sch 140	22.22 (8.750)	1.07 0.90
Downcomer	4.84 (52.1)	0.01577 (0.1697)	0.01603 (0.1726)	15 cm (6 in.) 1.3 cm (5 in.) wall	14.29 (5.625)	1.02
Hot leg						
o Broken	0.426 (4.59) [74 cm (29 in.) ID]	0.00139 (0.0149)	0.00145 (0.0155)	5 cm (2 in.) sch 160	4.290 (1.689)	1.04
o Unbroken	1.279 (13.77)	0.00416 (0.0448)	0.00426 (0.0458)	7.6 cm (3 in.) sch 80	7.366 (2.900)	1.02
Pump suction						
o Broken	0.487 (5.24) [78 cm (31 in.) ID]	0.00159 (0.01706)	0.00159 (0.0170)	6.3 cm (2.5 in.) sch XXSTG	4.498 (1.771)	1.00
o Unbroken	1.460 (15.72)	0.00476 (0.0512)	0.00477 (0.0513)	7.6 cm (3 in.) sch 40	7.793 (3.068)	1.003
Cold leg						
o Broken	0.383 (4.12) [70 cm (27.5 in.) ID]	0.00125 (0.0134)	0.00131 (0.0140)	3.8 cm (1.5 in.) sch 40	4.090 (1.610)	1.05
o Unbroken	1.148 (12.36)	0.00374 (0.0402)	0.00426 (0.0458)	7.6 cm (3 in.) sch 80	7.366 (2.900)	1.14
Steam generator						
o Unbroken tubes	3.1674 (34.095)	0.01031 (0.1110)	0.01003 (0.1079)[d]	2.2 cm (0.875 in.)	1.968 (0.775)	0.97
o Inlet/outlet plenums	11.990 (129.06)	0.03906 (0.4204)	0.02162 (0.2327)[e]	0.127 cm (0.05 in.) wall 25 cm (10 in.) sch 80	24.29 (9.564)	0.55
o Broken tubes	1.0558 (11.365)	0.00344 (0.0370)	0.00335 (0.0360)[f]	2.2 cm (0.875 in.)	1.968 (0.775)	0.97
o Inlet/outlet plenums	3.997 (43.02)	0.01301 (0.1401)	0.007411(0.0804)[e]	0.127 cm (0.05 in.) wall 15 cm (6 in.) sch XSTG	14.63 (5.761)	0.57

a. Based on PWR core flow area to FLECHT SEASET bundle flow area ratio: 51.2/0.1665 = 307; PWR is a 412 - SNUPPS.
b. Empty
c. With 10 2.858 cm (1.125 in.) OD columns [64.1 cm^2 (9.94 $in.^2$)]
d. All 33 tubes unplugged
e. Volume was scaled.
f. All 11 tubes unplugged

TABLE 4-3

COMPARISON OF PWR AND SYSTEMS EFFECTS TEST LENGTHS AND FLOW RESISTANCES[a]

Component	Length [m (ft)]		Length Ratio (FS/PWR)	Resistance Coefficient, K[b,c]		Elevation[d] [m (ft)]	
	PWR	FLECHT SEASET		PWR	FLECHT SEASET	PWR	FLECHT SEASET
Core	3.66 (12.0)	3.66 (12.0)	1.0			3.66 (12.0)	3.66 (12.0)
Lower plenum							
Upper plenum	2.13 (6.975)	1.33 (4.375)	0.63			4.029 (13.22)	4.029 (13.22)
Downcomer	4.874 (15.99)[e] 7.026 (23.05)[f]	4.877 (16.00)[e] 5.94 (19.5)[f]	1.0 0.85			4.874 (15.99)[e]	4.877 (16.0)[e]
Hot leg							
o Broken	6.86 (22.5)	6.25 (20.5)	0.91	0.308	3.81	4.855 (15.93)[e]	4.877 (16.0)[e]
o Unbroken	6.86 (22.5)	6.95 (22.8)	1.01	0.308	2.48	4.855 (15.93)[e]	4.877 (16.0)[e]
Pump suction							
o Broken	11.3 (37.0)	11.66 (38.25)	1.03	21.68	11.89	2.024 (6.64)[g]	2.033 (6.67)[g]
o Unbroken	11.3 (37.0)	11.66 (38.25)	1.03	21.68	13.00	2.024 (6.64)[g]	2.033 (6.67)[g]
Cold leg							
o Broken	7.47 (24.5)	4.67 (15.3)	0.62	0.220	6.02	5.224 (17.14)[h]	5.233 (17.17)[h]
o Unbroken	8.69 (28.5)	8.61 (28.25)	0.99	1.18	7.17	5.224 (17.14)[h]	5.233 (17.17)[h]
Steam generator							
o Unbroken tubes	20.2 (66.2) max 17.6 (57.7) avg	~21.3 (70.0)	1.2	7.88	8.39	7.291 (23.92)[i]	7.291 (23.92)[i]
o Inlet/outlet plenums	1.60 (5.25) max	1.14 (3.75)	0.71			5.694 (18.68)[j]	6.10 (20.0)[j]
o Broken tubes	20.2 (66.2) max 17.6 (57.7) avg	~21.3 (70.0)	1.2	7.88	8.36	7.291 (23.92)[i]	7.291 (23.92)[i]
o Inlet/outlet plenums	1.60 (5.25) max	1.14 (3.75)	0.71			5.694 (18.68)[j]	6.10 (20.0)[j]

a. Based on PWR core flow area to FLECHT SEASET bundle flow area ratio: 51.2/0.1665 = 307; PWR is a 412 - SNUPPS.
b. Full-length scaling
c. Based on hot leg area and hot leg density (hot leg dynamic head)
d. Based on bottom of heated length
e. Bottom of cold leg/hot leg pipe ID; overflow height
f. Maximum height.
g. U-bend centerline
h. Centerline of cold leg pipe
i. Bottom of tubesheet
j. Bottom of inlet plenum

If one examines the heat flux ratio, where A_s is the heat transfer surface area,

$$\frac{q_m}{q_p} = \frac{q''_m}{q''_p}\frac{As_m}{As} = A^* \tag{4-5}$$

if the heat flux scaling is to be maintained as unity ($q''_m/q''_p = 1$). Then, from equations (4-4) and (4-5),

$$\frac{q_m}{q_p} = \left(\cancel{\frac{q''_m}{q''_p}}\right)^{1} \frac{As_m}{As_p} = A^* \tag{4-6}$$

or

$$\frac{As_m}{As_p} = \frac{N_m \pi D_m L_m}{N_p \pi D_p L_p} \tag{4-7}$$

for either the core or the steam generator. Again from equation (4-1), $L_m/L_p = L^* = 1$; thus

$$\frac{N_m D_m}{N_p D_p} = A^* \tag{4-8}$$

The designer is faced with a choice of having a scaled number of heat transfer surfaces (N_m) and preserving the characteristic dimension of the surface (D_p), or increasing the number of surfaces and reducing the characteristic dimension of the surface. From a scaled experiment point of view, the proper choice is to preserve the characteristic dimension of the heat transfer surface such that $D_m/D_p = 1$ and

$$\frac{N_m}{N_p} = A^* \tag{4-9}$$

Then the heater rods or steam generator tubes are prototypical, but there are fewer of them in the model.

By preserving the diameter, lengths, velocities, and accelerations, several single-phase dimensionless numbers are preserved between the prototype and the model, if the fluid conditions are the same. In the bundle and steam generator, since $D_m/D_p = 1$, then for the same fluid conditions the Reynolds numbers of the model and prototype are the same, as are the Euler numbers and Prandtl numbers, where the Euler number represents the loop pressure drop or the pressure drop of a major comparent such as the bundle, steam generator, or downcomer. As mentioned earlier, the Euler number for the interconnecting piping would not be preserved, since the volume scaling results in an increased pressure drop per foot for the model. Also, the pump resistance and Euler number are not preserved between the model and prototype because in the model, the pump resistance simulator is decreased to compensate for the increased piping resistance such that the overall resistance stays the same. Thus, only the overall loop Euler number, and the steam generator and bundle Euler numbers are preserved.

Considering single-phase heat transfer in the heat bundle (core) or steam generator,

$$\frac{q''_m}{q''_p} = \frac{h_m}{h_p} \frac{\Delta T_m}{\Delta T_p} \tag{4-10}$$

Since by equation (4-5), $q''_m/q''_p = 1$, the heat transfer in the prototype is related to the model heat transfer as

$$h_p = h_m \frac{(T_w - T_f)_m}{(T_w - T_f)_p} \tag{4-11}$$

Therefore, for the heat transfer coefficient to be the same between the model and the prototype, the physical properties of the coolant in each case should be the same as well, as the temperature difference between the heat transfer surface and coolant. It should be noted that, if the physical properties are weakly dependent on the absolute

value of the temperature, then the test results can be applied to other temperature or pressure levels with little error. Therefore, for the same physical properties, with volume scaling, the Nusselt numbers remain the same. The Grashof number also remains the same between the prototype and model for volume scaling, since the lengths are preserved as well as the characteristic length (D_m/D_p).

In summary, a volume scaling approach was used for the FLECHT SEASET systems effects facility for both reflood and natural circulation tests. The scaling logic is more precise for reflood conditions since the physical properties of the coolant in the model and prototype are identical. Scaling compromises will occur in the attempt to simulate the higher pressures for small break situations. This distortion is discussed in detail in paragraph 4-3.

Therefore, the scaling logic in the FLECHT SEASET facility employs the following criteria:

-- The power input per fluid volume in the test bundle compared to that of an average power fuel assembly in a PWR is preserved so that the steam generation rates will be about the same.

-- The steam generator is sized to preserve the same power (or heat source) per tube bundle flow area as that of a normal Westinghouse four-loop steam generator.

-- This preserves the cooling capacity of the generator and the cooling/length such that the proper elevation heads are available for natural circulation.

-- The elevations are maintained at full height and the system components are at the same relative elevations as in a four-loop Westinghouse PWR. Since reflooding and natural circulation are gravity-driven processes, all elevations are maintained at full height so that important driving forces in the system will be simulated and the dominant term in the momentum equation for each component will be preserved.

-- The real-time nature of the process was preserved so that thermal-hydraulic events would occur on a real-time scale basis. This requires that the piping and flow paths between components be full length so that the transport times between components are preserved.

The basic scaling factor for the test is 1:307. This ratio stems from the selection of the 161-heater rod bundle array to simulate the PWR core, with the result that the test bundle flow area and volume are 1/307 of the flow area and volume of the standard Westinghouse four-loop, 3425 MWt PWR core. The sizing of the other system volumes has also been made on a 1/307 scale where possible. The energy release capability of the FLECHT-SET heater rod bundle has also been maintained compared to an average assembly of PWR fuel rods during the reflood and small-break phases of a LOCA transient. This is accomplished by providing identical heated lengths, heater rod diameters, and kw/ft ratings (for reflood power levels) and comparable peaking factors of each rod compared to PWR fuel rods. The material properties of the FLECHT SEASET heater rod are sufficient to repeatedly attain the temperature and power levels required for heat release during the simulated transients. By fixing the component length and preserving the power-to-flow area ratio, the steam velocities at different locations in the system were preserved. Preservation of the steam velocities helped to preserve the real-time aspect of the experiment and also helped to preserve the entrainment and liquid fallback potential in different system components, such as the bundle, upper plenum, steam generator plena, and the hot legs. Some compromise in local resistances have been made; however, the total resistance is adjusted by suitable orificing so that the total loop resistance is the same as that of a PWR.

4-3. PRESSURE EFFECTS AND SCALING FOR FLECHT SEASET TESTS

For a small-break LOCA the pressure range of interest is 4.1 to 8.3 MPa (600 to 1200 psia), which is significantly greater than the pressure capability of the FLECHT SEASET systems effects loop. In the natural circulation test plan, three types of tests are planned:

-- Liquid-solid natural circulation with liquid-solid steam generator secondary side

-- Two-phase primary side natural circulation with boiling secondary steam generator side

-- Reflux condensation primary side with boiling secondary side steam generators

For the single-phase tests, it is expected that the effect of pressure on the Nusselt number would be small, such that the resulting temperature rises for the model and prototype would be similar. It should be noted that for the volume scaling, $D_m/D_p = 1$, $V_m/V_p = 1$, and it was assumed that for the Grashof number $(T_w - T_f)_m/(T_w - T_f)_p = 1$.

The resulting impact of the property differences on the expected temperature rises in the model and prototype can be estimated as

$$\frac{q''_m}{q''_p} = \frac{h_m \Delta T_m}{h_p \Delta T_p} = \frac{Nu_m \, k_m \, D_p}{D_m \, Nu_p \, k_p} \frac{\Delta T_m}{\Delta T_p} = 1 \qquad (4\text{-}12)$$

where Nu could be forced turbulent convection or natural convection. Noting that $q''_m/q''_p = 1$, and assuming a Dittus-Boelter[1] expression for turbulent forced convection, the temperature rise ratio for the model and prototype becomes

$$\frac{\Delta T_m}{\Delta T_p} = \left(\frac{Re_p}{Re_m}\right)^{0.8} \left(\frac{Pr_p}{Pr_m}\right)^{0.4} \frac{k_p}{k_m} \qquad (4\text{-}13)$$

Similarly, for natural circulation where

$$Nu = 0.17 \, (Gr \cdot Pr)^{1/4} \; (2)$$

1. Dittus, F. W., and Boelter, L. M. K., "Heat Transfer in Automobile Radiators of the Tubular Type," Univ. Calif., Berkeley Publ. Eng. 2, 13, 443-462 (1930).

2. Eckert, E. R. G., and Drake, R. M., Analysis of Heat and Mass Transfer, McGraw-Hill, New York, 1972.

and noting that Gr has a ΔT dependence, a similar expression for the heat flux ratio can be derived to give

$$\frac{q''_m}{q''_p} = \frac{(Gr' \cdot Pr)_m^{1/4} \, k_m (\Delta T_m)^{5/4} \, D_p}{D_m (Gr' \cdot Pr)_p^{1/4} \, k_p (\Delta T_p)^{5/4}} = 1 \tag{4-14}$$

where

$$Gr'_m = Gr_m / \Delta T_m$$

The temperature ratio then becomes

$$\frac{\Delta T_m}{\Delta T_p} = \left[\left(\frac{Gr'_p \cdot Pr_p}{Gr'_m \cdot Pr_m} \right)^{1/4} \left(\frac{k_p}{k_m} \right) \right]^{4/5} \tag{4-15}$$

Comparisons of the Nusselt number ratios and the resulting temperature ratio between the model and prototype for both forced convection and natural convection are shown in table 4-4. There is a maximum of 25 percent variation between the expected model temperature rise and the prototype temperature rise at a scaling pressure of 8.3 MPa (1200 psia). For forced convection, the model temperature rise will be smaller than the prototype temperature rise, primarily due to the Prandtl number ratio. In natural circulation, the model temperature rise will be larger. In either case the difference in the model and prototype temperature is approximately 20 percent; this is acceptable for the FLECHT SEASET tests.

For two-phase natural circulation and reflux condensation, the heat transfer mode of interest is condensation in the steam generator tubes. Assuming laminar film condensation on the vertical surfaces, the Nusselt analysis[1] gives

$$\overline{h_c} = 0.943 \left[\frac{g(\rho_f - \rho_g)\rho_f k_f^3 h_{fg}}{\mu_f L (T_{sat} - T_w)} \right]^{1/4} \tag{4-16}$$

1. Eckert, E. R. G., and Drake, R. M., Analysis of Heat and Mass Transfer, McGraw-Hill, New York, 1972.

TABLE 4-4

INFLUENCE OF PRESSURE ON SINGLE-PHASE HEAT TRANSFER AND TEMPERATURE RISE

Mode	Parameter	Value at Indicated Pressure	
		4.1 MPa (600 psia)	8.3 MPa (1200 psia)
Forced convection	$\frac{Nu_m}{Nu_p}$	1.12	1.062
	$\frac{\Delta T_m}{\Delta T_p}$	0.796	0.747
Natural convection	$\frac{Nu_m}{Nu_p}$	0.747	0.679
	$\frac{\Delta T_m}{\Delta T_p}$	1.15	1.19

Therefore, the wall heat flux becomes

$$q'' = \overline{h_c}\,(T_{sat} - T_w) \tag{4-17}$$

Applying the scaling criteria where the heat flux ratio is unity gives

$$\frac{q''_m}{q''_p} = 1 = \frac{0.943\left[\dfrac{g\rho_f(\rho_f - \rho_g)k_f^3 h_{fg}}{\mu_f L(T_{sat} - T_w)}\right]_m^{1/4}(T_{sat} - T_w)_m}{0.943\left[\dfrac{g\rho_f(\rho_f - \rho_g)k_f^3 h_{fg}}{\mu_f L(T_{sat} - T_w)}\right]_p^{1/4}(T_{sat} - T_w)_p} \tag{4-18}$$

Simplifying the expression in equation (4-18) gives

$$1 = \left[\frac{(T_{sat} - T_{w_m})}{(T_{sat} - T_{w_p})}\right]^{3/4} \left[\frac{\rho_{f_m}\left(\rho_{f_m} - \rho_{g_m}\right)k_{f_m}^{3} h_{fg_m} \mu_{f_p}}{\rho_{f_p}\left(\rho_{f_p} - \rho_{g_p}\right)k_{f_p}^{3} h_{fg_p} \mu_{f_m}}\right]^{1/4} \tag{4-19}$$

Assuming that the prototype is at 4.1 MPa (600 psia), the condensation wall temperature ratio [first bracketed term in equation (4-19)] is 1.09, and at 8.3 (1200 psia) the ratio becomes 1.25. This indicates that the condensation effects for the prototype and model are similar and that the model will yield prototypical condensation heat transfer data.

There is a serious discrepancy between the density of the vapor at the model conditions and the corresponding vapor density at reactor conditions which can affect the two-phase flow behavior of the system. Assuming that the FLECHT SEASET test facility will simulate two-phase natural circulation and reflux condensation at a system pressure of 0.34 MPa (50 psia), the ratio of the steam densities ρ_m/ρ_p becomes 0.092 at 4.1 MPa (600 psia) and 0.04246 at 8.3 MPa (1200 psia). Therefore, for the scaled steam mass flow in the simulated hot leg, the resulting vapor velocity will be significantly higher in the FLECHT SEASET model compared to the prototype.

The concern is that larger steam velocities in the hot legs due to the lower system pressure for the FLECHT SEASET model could yield nonprototypical flow conditions or transitions compared to the reactor for two-phase natural circulation and reflux condensation cooling modes. These concerns are particularly important if a transient test is being conducted with a break simulation such that the system inventory is continuously decreasing. The scaled test could continue to promote two-phase natural circulation because of the higher steam velocity, whereas the PWR could be in a reflux condensation mode.

A similar concern exists in the steam generator inlet plenum at the tubesheet. The higher-than-scaled hot leg steam velocity could lead to a different flooding characteristic for the model steam generator tubesheet compared to the PWR. Both the hot leg two-phase flow regime transitions and flooding behavior of the steam generator tubesheet are investigated next.

Examining the steam flow in the FLECHT SEASET hot legs,

$$\dot{M}_{s_m} = \frac{q_m}{h_{fg_m}} = \frac{q_m''' A_m L_m}{h_{fg_m}} \tag{4-20}$$

where no inlet subcooling was used, and all the power generation was assumed to generate vapor.

Also in the hot leg,

$$\dot{M}_{s_m} = \rho_m A_m^{HL} V_m^{HL} \tag{4-21}$$

where the superscript HL denotes hot leg and A_m^{HL} and V_m^{HL} are the hot leg flow area and velocity.

Thus, solving equations (4-20) and (4-21) for the hot leg steam velocity in the model yields

$$V_m^{HL} = \frac{q_m''' A_m L_m}{h_{fg_m} \rho_m A_m^{HL}} \tag{4-22}$$

In the prototype, a similar relationship can be developed:

$$V_p^{HL} = \frac{q_p''' A_p L_p}{h_{fg_p} \rho_p A_p^{HL}} \tag{4-23}$$

Taking the ratio yields

$$\frac{V_m^{HL}}{V_p^{HL}} = \left(\frac{A_m}{A_p}\right)\left(\frac{h_{fg_p}}{h_{fg_m}}\right)\left(\frac{L_m}{L_p}\right)\left(\frac{q_m'''}{q_p'''}\right)\left(\frac{\rho_p}{\rho_m}\right)\left(\frac{A_p^{HL}}{A_m^{HL}}\right) \tag{4-24}$$

Using earlier identities,

$$\frac{q_m'''}{q_p'''} = 1 = \frac{L_m}{L_p}$$

$$\frac{A_m}{A_p} = \frac{1}{\text{scale factor}} = \frac{1}{307}$$

$$\frac{A_p^{HL}}{A_m^{HL}} = \text{scale factor} = 307$$

Thus,

$$\frac{V_m^{HL}}{V_p^{HL}} = \left(\frac{h_{fg_p}}{h_{fg_m}}\right)\left(\frac{\rho_p}{\rho_m}\right) \tag{4-25}$$

This ratio becomes 8.78 at 4.1 MPa (600 psia) for the prototype and 15.59 at 8.3 MPa (1200 psia) for the prototype, assuming a 0.34 MPa (50 psia) pressure for the model.

To preserve the steam velocity in the hot leg, only two parameters can be changed, the volumetric heat generation rate (test power), and the hot leg flow area (A_m^{HL}), since the facility scale factor and pressure were already fixed.

The power generation in the experiment would have to be reduced by a factor of 8 to 15 below the scaled value to preserve the steam velocity in the hot leg. This would mean conducting tests at 0.2 percent of simulated reactor power rather than the preferred 2 percent of simulated reactor power. The lower test power would yield lower temperature rises, which would be difficult to measure. Also, unless the steam generator secondary side flow was correspondingly reduced by the same factor, the primary side heat would all be removed at the immediate entrance of the steam generator. The measurement and control problems with such a low-power test made decreasing the test power an undesirable choice. Therefore, it was decided to enlarge the hot legs as much as possible consistent with the test vessel upper plenum and the existing steam generator plena. The hot leg inside diameters were increased from 42.9 to 76.2 mm (1.689 to 3.00 in.) for the broken loop and 73.6 to 152 mm (2.9 to 6 in.) for the unbroken loop simulation. Usng these diameters to recalculate the hot leg area relative to the PWR flow areas, equation (4-25) can be recalculated for the steam flow in the hot leg for the model compared to the prototype. Therefore,

$$\frac{V_m^{HL}}{V_p^{HL}} = \frac{h_{fg_p}}{h_{fg_m}} \frac{\rho_p}{\rho_m} \frac{18.36}{0.2454} \frac{1}{307} \tag{4-26}$$

resulting in a steam velocity ratio of 2.14 at 4.1 MPa (600 psia) and 3.798 at 8.3 MPa (1200 psia). Therefore, when the hot leg diameter is increased, the steam velocity in the FLECHT SEASET hot legs is closer to the proper scaled value. However, the test steam velocity is still higher than the proper scaled value.

The flow regime transition which is of interest in the hot leg is the intermittent slug-plug to stratified flow regime. It is expected that co-current slug and plug flow would exist in the hot leg during two-phase natural circulation. However, as mass is drained from the system and reflux condensation occurs, eventually the hot leg will become stratified with liquid flowing back to the core at the same time that steam is flowing in the opposite direction toward the steam generators.

The higher hot leg velocity in the FLECHT SEASET test facility relative to a PWR could prolong the intermittent slug-plug regime while the PWR hot leg would be in a stable stratified flow regime. Therefore, to investigate the possible hot leg flow regime effects and flow regime transitions, the work on horizontal flow regime transition by Taitel and Dukler[1] was investigated.

Taitel and Dukler give a criterion for the transition between the intermittent (plug and slug) flow regime and the stratified flow regime in terms of the superficial vapor velocity in the hot leg. The expression for the critical velocity for the transition vapor velocity U_g is

$$U_g = \left\{ \frac{(\rho_f - \rho_g)\, D \cdot g \cdot (1 - \tilde{h}_L)^2 \cdot Ag^2}{\rho_g \left(\frac{\pi}{4}\right) \left[1 - (2\,\tilde{h}_L - 1)^2\right]^{1/2}} \right\}^{1/2} \tag{4-27}$$

where

$$A_g = 0.25 \left\{ \cos^{-1} (2\tilde{h}_L - 1) - (2\tilde{h}_L - 1) \left[1 - (2\tilde{h}_L - 1)^2\right]^{1/2} \right\}$$

and $\tilde{h}_L$ is h/D where h is the liquid height in the pipe of diameter D. Equation (4-27) was programmed and solved for the PWR dimensions and pressures of 4.1 and 8.3 MPa (600 and 1200 psia) for a range of $\tilde{h}_L$ values as well as for the FLECHT SEASET facility at 0.34 MPa (50 psia) with the larger pipe diameter.

Equation (4-27) will give the superficial vapor velocity at the transition between the intermittent and stratified flow regimes for a given water height in the hot leg.

Values for U_g were obtained for different water heights in the hot leg for both the PWR case and FLECHT SEASET. The hot leg superficial velocity, which is equal to 2 percent of core decay heat boiloff, was also calculated for the PWR and FLECHT SEASET. The

1. Taitel, Y., and Dukler, A. E., "A Model for Predicting Flow Regime Transitions in Horizontal and Near-Horizontal Gas-Liquid Flow," J. Amer. Inst. Ch. Eng. 22, 1, 47-55 (1976).

intersections of these two curves, for the PWR and for FLECHT SEASET, indicate the maximum value of h or liquid level in the pipe allowed at the transition point. As discussed above, the liquid level will be lower in the FLECHT SEASET tests compared to the PWR because of the lower pressure (and corresponding higher hot leg steam velocity).

As figure 4-4 indicates, the hot leg would have to be drained to 58 percent of its height before the flow regime in the hot leg would be stable stratified flow. The corresponding liquid levels in the hot leg for the PWR are 73 percent at 4.1 MPa (600 psia) and 75 percent at 8.3 MPa (1200 psia).

This means that the FLECHT SEASET test facility will remain in two-phase natural circulation with lower mass inventories as compared to the higher-pressure PWR. This difference in transition between one flow regime and another is a result of the pressure scaling effect and has nothing to do with the volume scaling.

Zuber[1] performed a similar analysis for the Semiscale small-break tests and also showed that even for the same pressure (and therefore coolant physical properties), the transition between intermittent and stratified flow does not scale with volume. This means that no sealed facility will exactly model the flow regime transition in the PWR.

The other area of concern is the possible flooding effects at the steam generator tubesheet during the reflux condensation simulations in the FLECHT SEASET facility. The higher vapor velocity in the hot legs and steam generator tubes could restrict the return of the condensate to the hot leg such that a pulsing flow similar to that observed by Banerjee[2] would exist in the FLECHT SEASET tests; pure reflux condensation would occur in the PWR. Since the flow area in the steam generator tubes was not increased, as was done with the hot legs, the steam velocity at the tubesheet is greater than the scaled value by a factor of 8 to 15.

---

1. Zuber, N., "Scaling of Two-Phase Flow Transition in Horizontal Pipes of Semiscale," NRC Memorandum, September 1979.

2. Banerjee, S., et al., "Reflux Condensation and Transition to Natural Circulation in a Vertical Tube," presented at 1981 Winter ASME meeting, Heat Transfer Aspects of Reactor Safety.

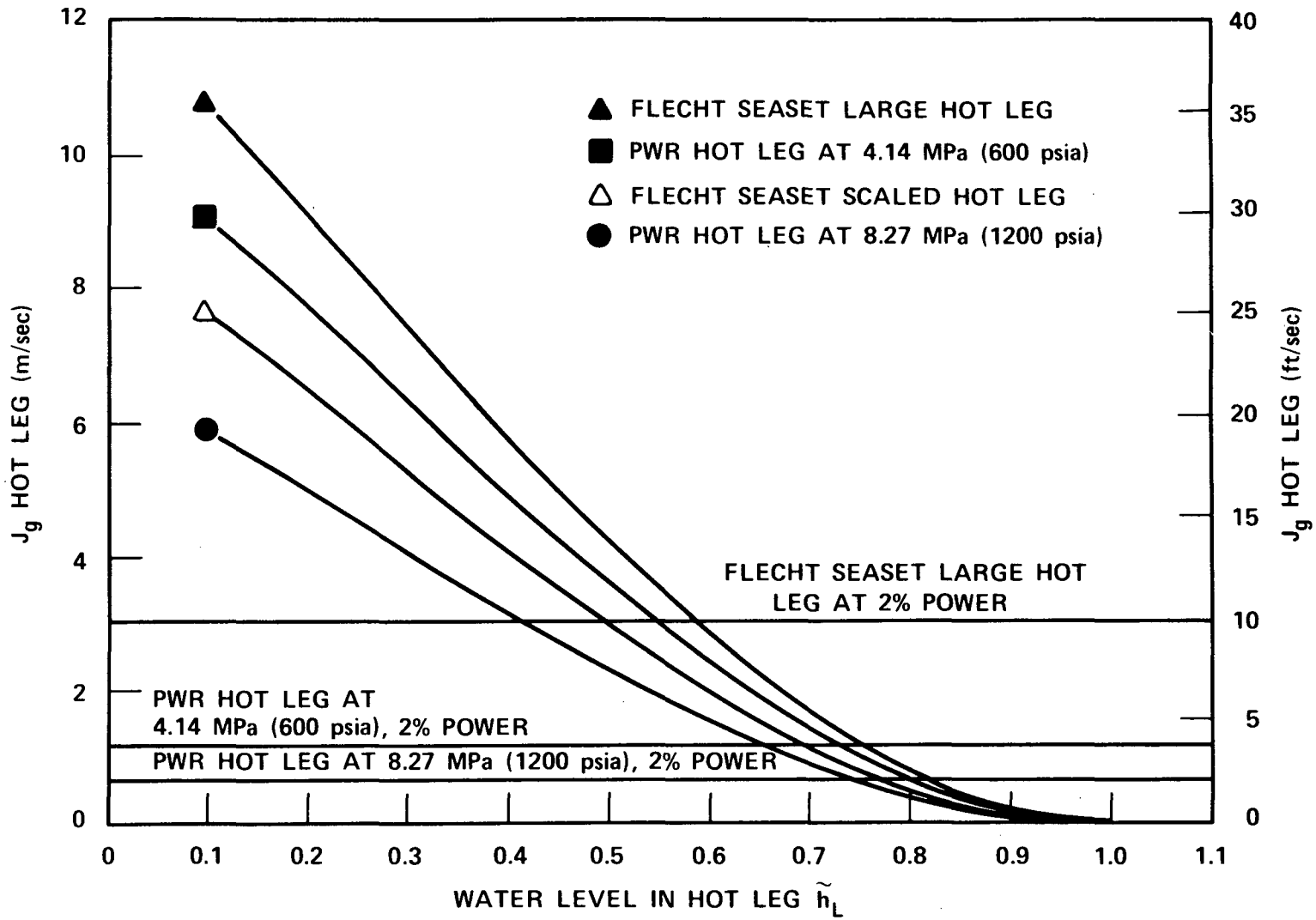

Figure 4-4. Calculation of Flow Regime Transition Points for PWR and FLECHT SEASET Facility

The flooding characteristics of the steam generator tubesheet are assumed to obey the Wallis flooding correlation[1] given by

$$\sqrt{J_g^*} + m\sqrt{J_f^*} = C \tag{4-28}$$

where

$$J_g^* = \frac{J_g\sqrt{\rho_g}}{\sqrt{gD(\rho_f - \rho_g)}} \tag{4-29}$$

and

$$J_f^* = \frac{J_f\sqrt{\rho_f}}{\sqrt{gD(\rho_f - \rho_g)}} \tag{4-30}$$

with values of m = 1.0 and C = 0.725 for sharp-edged tubes. For no liquid downflow, $J_f^* = 0$ and

$$J_{g\ crit}^* = C^2 \tag{4-31}$$

Therefore,

$$J_{g_{crit}} = \frac{C^2\sqrt{gD(\rho_f - \rho_g)}}{\sqrt{\rho_g}} \tag{4-32}$$

1. Wallis, G. B., One-Dimensional Two-Phase Flow, McGraw-Hill New York, 1969.

The value of D is the inside diameter of the steam generator tube. The critical flooding velocity for the FLECHT SEASET test and the PWR are shown in figure 4-5, along with the superficial steam velocity calculated for a given steam generator tube for different decay powers in the core. As the figure indicates, at decay powers above 3 percent, the FLECHT SEASET test facility could flood at the steam generator tubesheet.

At these higher decay powers, it is speculated that the FLECHT SEASET test facility would not operate in a stable reflux mode. It is believed that some of the steam generator tubes of the facility would oscillate between a refluxing mode, in which the condensate accumulated in the steam generator tubes, and a two-phase natural circulation, in which the accumulated condensate would be pushed over the U-bend into the steam generator outlet plenum in much the same manner as in the single-tube experiments of Banerjee. The PWR, on the other hand, is nowhere near the flooding limit even at 5 percent decay power. Since the operating power of the FLECHT SEASET experiments was set at 2 percent of decay power, and in addition since not all of the decay power will generate steam because some subcooling exists, it is felt that the refluxing capability of the test facility will be nearly prototypical at low decay powers. However, higher powers could cause oscillations in the steam generator tubes, as they would flood then drain back into the steam generator plenum.

4-4. SCALING CONCLUSIONS

The low-pressure facility has been examined for its applicability for simulating higher-pressure small break natural circulation cooling modes. The lower pressure in the FLECHT SEASET facility will require lower system mass inventory to attain the same flow regimes in the hot leg compared to the PWR, even with the larger-than-scale hot leg diameters. Also, the FLECHT SEASET steam generators will be closer to the flooding limit than those of the PWR; this could produce a delay from two-phase natural circulation to pure reflux condensation, or some of the tubes could be flooded while other tubes are refluxing. This means that if a transient FLECHT SEASET test were conducted with the scaled break flow of a PWR, the time periods between the different cooling modes in the experiment would be longer than in a PWR, since more mass would have to be depleted from FLECHT SEASET. Therefore, in spite of volume scaling, the

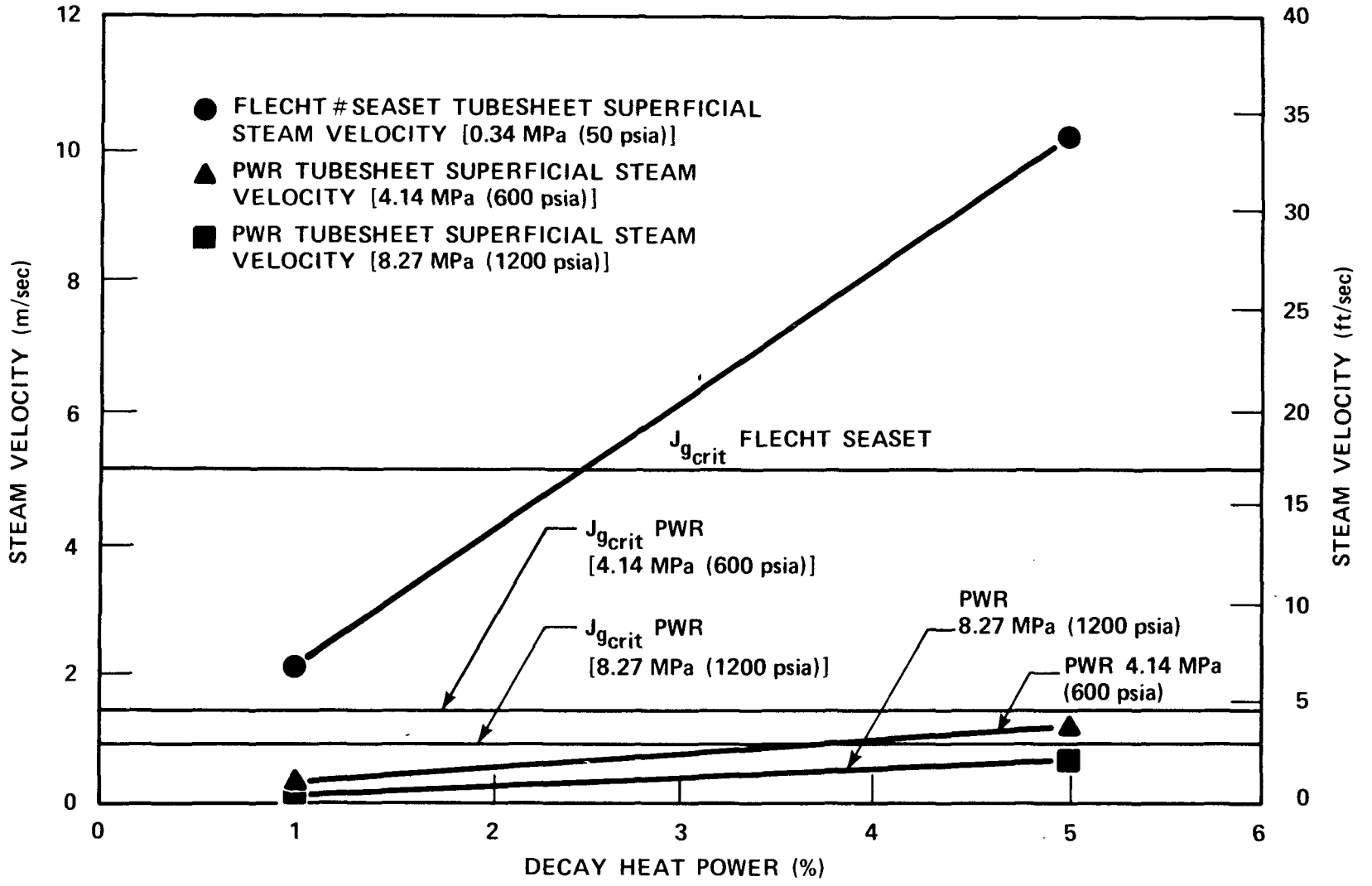

Figure 4-5. Critical Velocities for Tubesheet Flooding

SECTION 5

TEST PARAMETER RANGES AND REFERENCE CONDITIONS

Three types of tests were performed under various degrees of natural circulation: liquid single-phase primary flow, two-phase primary flow, and reflux condensation in the primary system. The liquid single-phase natural circulation tests were conducted at different power levels to examine the resulting natural circulation flows, pressure drops, and bundle temperature rises. Reference test conditions for these tests are shown in table 5-1. Liquid single-phase natural circulation tests were also be conducted with a superimposed cold leg injection transient to see how cold leg injection of colder water, relative to the primary system temperature, affects the natural convection loop flow. A preset amount of cold water was injected into the cold leg when the test is at a stable, free convection mode. The resulting transient behavior of the system will be recorded.

A similar series of secondary side transients on induced primary system natural circulation were examined by varying the secondary side flow by about $\pm$ 50 percent after the system reaches a stable condition. The area of interest is the transient response of the primary system as it readjusts to a new secondary side cooling flow.

The two-phase natural circulation tests were generally conducted at lower powers, such that the hot leg linear velocities are closer to those expected in a PWR at higher pressures. The main parameters of interest for the two-phase tests are the secondary side conditions, effect of cold leg injection, and the effect of inert noncondensible gases.

The secondary side conditions were varied for the two-phase tests in a fashion similar to the primary side single-phase tests to investigate how the primary system responds to a cooling transient induced by the steam generator secondary side. Similar tests were performed with cold leg injection to see how the primary system responds when colder water is injected into the downcomer. The factor of interest is the induced primary system transient that occurs when the natural convection flow stalls because of the colder water. Since the facility is pressure limited, the temperature difference and thus the density difference will be much smaller than that expected in a PWR.

TABLE 5-1

REFERENCE TEST CONDITIONS FOR NATURAL CIRCULATION AND REFLUX CONDENSATIONTESTS

Parameter	Initial Conditions
System pressure	0.69 MPa (100 psia)
Bundle power (percent of full power)	0.2 - 0.6 - 1.0 - 2.0
Coolant ΔT subcooling at lower plenum	21 ^{o}C (70 ^{o}F)
Radial power distribution	Uniform
Axial power shape	Cosine
Steam generator secondary side	Circulating
-- Pressure	Ambient
-- Fluid temperature	Ambient
-- Flow	Reference[a]

a. Reference flow is that steam generator secondary side flow needed to obtain steady-state natural circulation at reference conditions.

The effect of noncondensible gases will also be examined by injecting them into the primary system. The effect of these gases will be to reduce the steam generator heat transfer such that the primary system will undergo a transient until a new equilibrium is reached.

The range of initial test conditions for all these tests are listed in table 5-2.

Correspondence regarding test parameter ranges is reproduced in appendix C.

TABLE 5-2

RANGE OF INITIAL TEST CONDITIONS FOR FLECHT SEASET NATURAL CIRCULATION AND REFLUX CONDENSATION TESTS

Parameter	Parameter Range
SINGLE PHASE NATURAL CIRCULATION TESTS	
Bundle power	0.2% - 2.0% of PWR full power (22.2 - 222.4 kw)
Radial power distribution	Uniform
Coolant flow (predicted)	0.79 - 1.70 kg/sec [1.75 - 3.75 lb/sec (13-30 gal/min)]
Coolant ΔT subcooling	78°C - 17°C (140°F - 30°F)
Cold leg injection coolant ΔT subcooling	78°C - 0°C (140°F - 0°F)
Steam generator secondary side:	
--Cooling water inlet temperature	Ambient
--Pressure	Atmospheric - 0.69 MPa (100 psia)
--Flow	0.5 reference - 1.5 reference[a]
Noncondensible gas:	
--Injection rate	Low - high
--Temperature	Ambient
--Pressure	System pressure
TWO-PHASE NATURAL CIRCULATION AND REFLUX CONDENSATION TESTS	
Bundle power	0.2% - 2.0% of PWR full Power (22.2 - 222.4 kw)
Radial power distribution	Uniform
Coolant ΔT subcooling	0°C - 17°C (0°F - 30°F)
Cold leg injection coolant ΔT subcooling	78°C - 0°C (140°F - 0°F)
Steam generator secondary side	
--Cooling water inlet temperature	6°C - 11°C (10°F - 20°F) subcooled - ambient
--Pressure	Atmospheric - 0.69 MPa (100 psia)
--Flow	0.5 reference - 1.5 reference[a]

a. Reference flow is that steam generator secondary side flow needed to obtain steady-state natural circulation at reference conditions.

SECTION 6

TEST FACILITY DESCRIPTION

6-1. FACILITY LAYOUT

The FLECHT facility in which the FLECHT-SET Phase B[1] test series was conducted was used as the basic configuration for this task. However, the test facility was modified in order to conduct natural circulation and reflux condensation tests, as shown isometrically in figure 6-1 and in a layout form in figure 6-2. The main modifications are as follows:

-- The broken cold leg is connected directly to the downcomer in order to provide a continuous flow path for natural circulation.

-- The hot leg loop piping has been increased in diameter to approach momentum flux scaling and countercurrent steam-water flows during reflux condensation.

-- The downcomer overflow tanks, which simulate a portion of a large break during LOCA, have been disconnected.

-- The water supply accumulator no. 1 will be used as a pressurizer to control system pressure and the primary side mass inventory.

-- A circulating cooling system has been added to the steam generators' secondary side, which during a small break acts as a heat sink rather than a heat source.

6-2. FACILITY COMPONENT DESCRIPTION

Paragraphs 6-3 through 6-16 describe facility components such as the test section, test bundle, upper plenum, hot leg piping, steam generators and steam generator secondary

---

1. Cleary, W. F., et al., "FLECHT-SET Phase B System Design Description," WCAP-8410, October 1974.

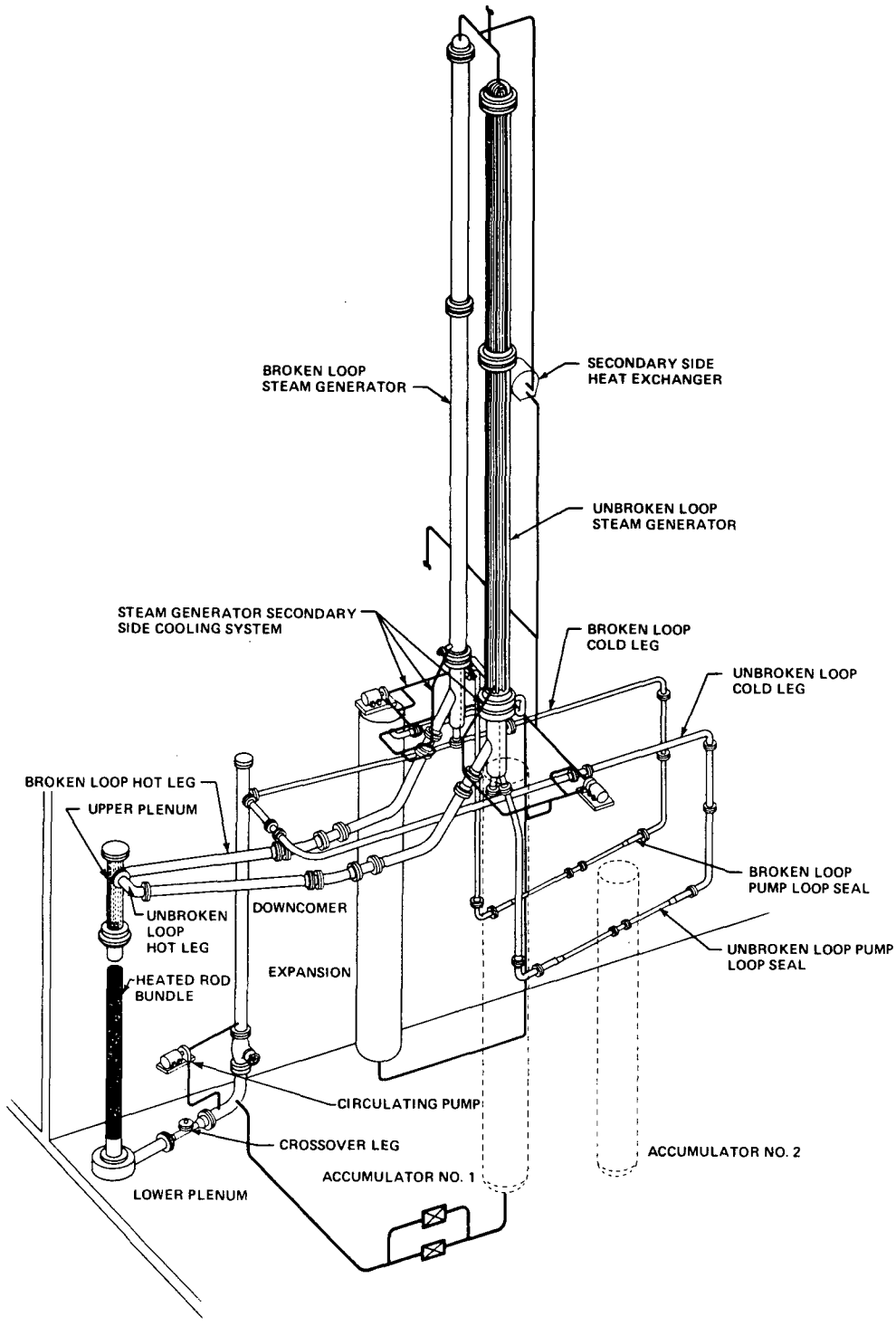

Figure 6-1. FLECHT SEASET Systems Effect Natural Circulation and Reflux Condensation Test Facility

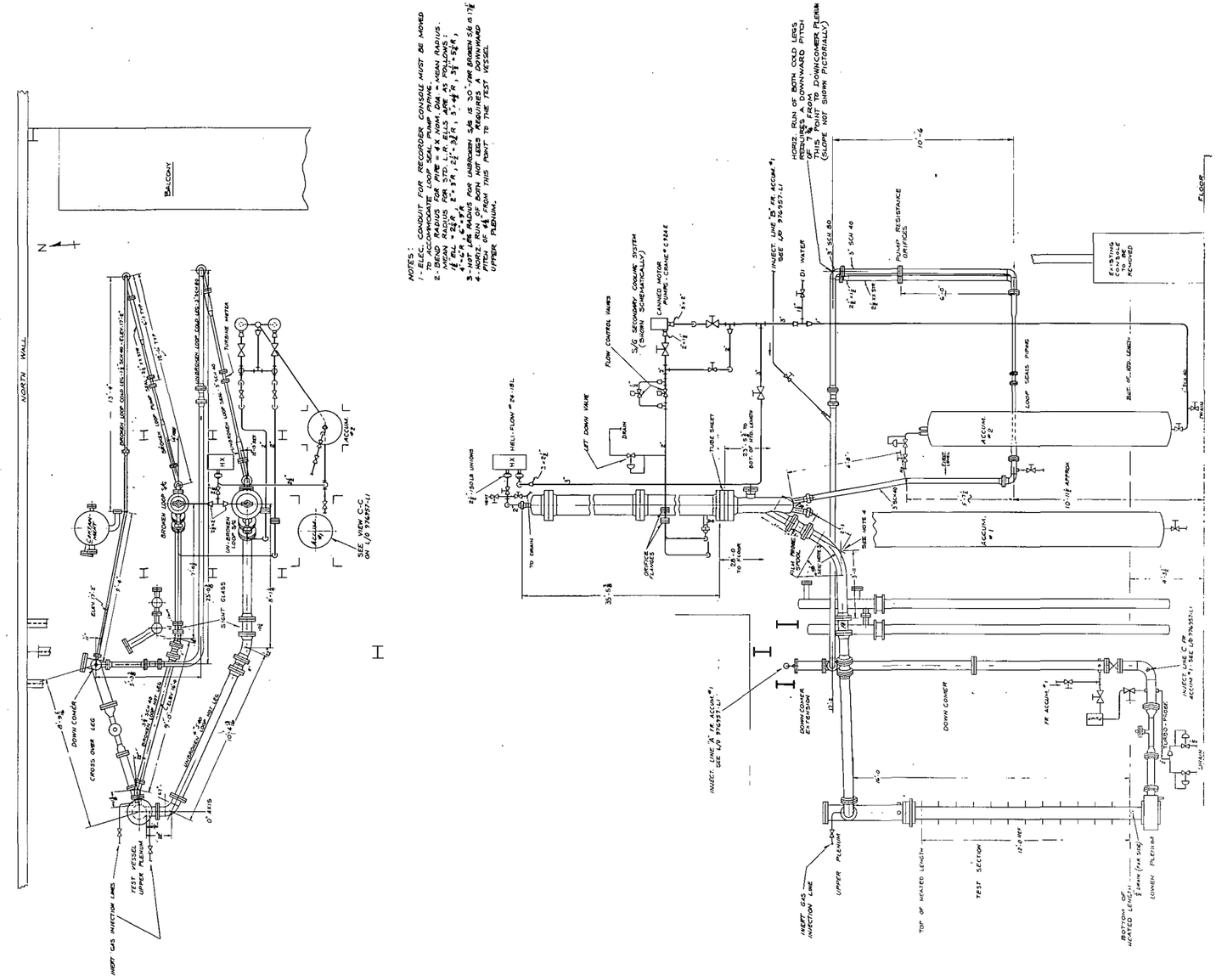

Figure 6-2. FLECHT SEASET Natural Circulation Piping Layout

side cooling system, pump loop seal piping and cold leg piping, downcomer, pressurizer, coolant injection system, and noncondensible gas injection and sampling system.

Table 6-1 lists all the test facility main components including lengths, flow areas, fluid volume, and metal weight associated with each component.

6-3. Test Section

The low mass housing together with the lower and upper plenums constitutes the test section, as shown in figure 6-3. The low mass housing, shown in figure 6-4, is a cylindrical vessel of 193.7 mm (7.625 in.) ID and 4.78 mm (0.188 in.) wall thickness constructed of 304 stainless steel rated for 0.52 MPa (60 psig) at 816°C (1500°F). The wall thickness, which is the minimum thickness allowed by Section 1 of the ASME Boiler and Pressure Vessel Code, was chosen so that the housing will absorb and hence release a minimum amount of heat as compared with the rod bundle. The inside diameter of the housing was made as close to the rod bundle outer dimensions as possible, to minimize excess flow area. The excess flow area is further minimized by solid triangular fillers, as shown in figure 6-5.

This design is very similar to that of the unblocked housing, with the exception of elimination of the windows and the slight lengthening to accommodate the different heater rod design. In addition, a complete set of "dummy" pressure taps was added 180 degrees from the 13 original taps to help relieve the unsymmetrical thermal stresses introduced by having taps on only one side. There is also a tap near the 0 m (0 in.) elevation to purge steam from the injection point in the downcomer and thus heat the crossover leg and the lower plenum before initiation of flooding.

The lower plenum design is essentially the same as that used in previous FLECHT and FLECHT-SET tests, as shown in figure 6-6.

6-4. Upper Plenum

The upper plenum is constructed of 254 mm (10 in.) sch 140 pipe (SA106 GRB) flanged on both ends with 15 and 9 cm (6 and 3.5 in.) nozzles attached for hot leg connections. The

plenum is capped with a bolted flat head from which instrumentation leads are brought out.

In the design of the FLECHT SEASET upper plenum three phenomena were determined to be important to preserve two-phase flow behavior:

-- Steam velocities at the upper core plate and in the upper plenum

-- Phase separation efficiency of the upper plenum internals

-- Froth layer buildup and sweepout through the hot legs

Velocities are maintained by preserving the upper core plate and upper plenum flow area ratios. By preserving the steam velocities, the flooding phenomena in the upper plenum and at the upper core plate should be preserved. Studies show that the flooding phenomenon is independent of geometry if the equivalent diameter of the flow channel is large enough. These studies are presented in appendix D. For the FLECHT SEASET upper plenum, the minimum low-channel equivalent diameter was determined to be 19.05 mm (0.75 in.).

The phase separation efficiency of the upper plenum depends mainly on the size of the internals, the gap between internals, and the number of rows of internals. The prototype upper plenum internals are of basically two shapes: cylindrical (support columns) and square (guide tubes). Based on studies done by Porteus[1] and at LASL[2] it was determined that the internals of the FLECHT SEASET upper plenum could be represented by a cylindrical geometry only. These studies showed the entrainment velocity curve for cylindrical and square internals to be nearly identical. Further studies[3] showed that the deentrainment characteristics of liquid on a rod were

1. Porteus, A., et al., "Pressurized Water Reactor Upper Head Injection Air-Water 1/30-Scale Entrainment Studies," NRC-0193-4, September 1977.

2. Personal communication, N. Lee with W. Kirchner, March 19, 1981.

3. Dallman, V. C., et al., "Entrainment Phenomena From Droplet Cross Flow in Vertical Rod Bundles," presented at Sixth Water Reactor Safety Research Meeting, Gaithersburg, MD, November 1978.

TABLE 6-1
FLECHT SEASET NATURAL CIRCULATION AND REFLUX CONDENSATION
SYSTEMS EFFECTS TEST FACILITY COMPONENT DIMENSIONS

Component	Length/Height [m (ft)]		Flow Area [m^2(ft^2)]		Fluid Volume [m^3 (ft^3)]		Metal Mass [kg (lb)]	
TEST SECTION								
Heated length:								
-- Housing (empty)	3.66	(12)	0.02945	(0.3170)	0.10777	(3.8053)	236.2	(520.8)
-- Heater rod bundle[a]	3.66	(12)	0.01570	(0.1690)	0.05745	(2.0286)	219.0	(482.9)
Heater rod extension and ground terminals	0.204	(0.669)	0.02740	(0.2950)	0.004010	(0.1416)	87.57	(193.1)
Ground plate	0.032	(0.104)	0.01149	(0.1237)	0.000362	(0.0128)	9.02	(19.9)
Instrument ring	0.067	(0.221)	0.04453	(0.4793)	0.00269	(0.0950)	36.1	(79.5)
Upper core plate	0.076	(0.250)	0.01446	(0.1557)	0.00110	(0.0389)	13.7	(30.3)
Upper plenum								
-- Vessel (empty)	1.334	(4.375)	0.03878	(0.4175)	0.051738	(1.8269)	257.7	(568.1)
-- With columns and guides	1.334	(4.375)	0.03243	(0.3491)	0.043106	(1.5221)	274.4	(605.1)
-- Column only (10)	1.318	(4.323)	-	-	-	-	14.9	(32.9)
Lower plenum								
-- Vessel including bundle extension below[b]	0.629	(2.063)	-	-	0.049217	(1.7379)	253.6	(559.1)
-- Heated length								
-- Downcomer lower elbow[c]	0.892	(2.928)	0.01642	(0.1767)	0.01459	(0.5152)	50.02	(110.3)
-- Crossover leg including turbo-probe spool, flexible spool, and lower plenum nozzle	1.722	(5.651)	0.00373	(0.0402)[d]	0.01653	(0.5837)	69.02	(152.2)
HOT LEGS								
Unbroken loop	6.7184	(22.042)	0.01864	(0.2006)	0.12521	(4.4216)	324.6	715.8
Broken loop	5.9524	(19.529)	0.00637	(0.0686)	0.037471	(1.3408)	134.6	296.8
UNBROKEN LOOP STEAM GENERATOR								
Inlet side								
-- Plenum	0.8111	(2.661)[e]	0.02450	(0.2637)[f]	0.02627	(0.9276)[g]	123.2	(271.7)[h]
-- Tubesheet	0.0954	(0.313)	0.009736	(0.1048)	0.00929	(0.0328)	70.07	(154.5)
-- Uphill side tubes	10.515	(34.497)	0.009736	(0.1048	0.10241	(3.6164)	236.7	(521.9)

a. Includes thimbles, steam probes, fillers and grids
b. A representative flow area cannot be defined.
c. Includes pipe section below bottom of heated length elevation and elbow
d. Based on minimum flow area, including flow straightener
e. Active length
f. Most representative
g. Active volume
h. Including dead volume metal weights

TABLE 6-1 (cont)
FLECHT SEASET NATURAL CIRCULATION AND REFLUX CONDENSATION
SYSTEMS EFFECTS TEST FACILITY COMPONENT DIMENSIONS

Component	Length/Height [m (ft)]		Flow Area [m^2(ft^2)]		Fluid Volume [m^3 (ft^3)]		Metal Mass [kg (lb)]	
UNBROKEN LOOP STEAM GENERATOR (cont)								
Outlet side								
-- Downhill side tubes	10.515	(34.497)	0.009736	(0.1048)	0.0241	(3.6164)	236.7	(521.9)
-- Tubesheet	0.0954	(0.313)	0.009736	(0.1048)	0.000929	(0.0328)	70.07	(154.5)
-- Plenum	1.143	(3.750)[e]	0.02450	(0.2637)[c]	0.02527	(0.8923)[g]	112.5	(248.1)[h]
Secondary side including tie rods and shell baffle plates (6)	10.429	(34.217)	0.05328	(0.5735)	0.5728	(20.2250)	2165.5	(4775.1)[i]
BROKEN LOOP STEAM GENERATOR								
Inlet side								
-- Plenum	0.9260	(3.038)[e]	0.00871	(0.0938)[f]	0.008963	(0.3165)[g]	52.33	(115.4)[h]
Tubesheet	0.0698	(0.229)	0.00334	(0.0360)	0.0023	(0.0082)	25.3	(55.8)
-- Uphill side tubes	10.533	(34.557)	0.00334	(0.0360)	0.035256	(1.2449)	81.49	(179.7)
Outlet side								
-- Downhill side tubes	10.533	(34.557)	0.00334	(0.0360)	0.035256	(1.2449)	81.49	(179.7)
-- Tubesheet	0.0698	(0.229)	0.00334	(0.0360)	0.00023	(0.0082)	25.3	(55.8)
-- Plenum	1.143	(3.750)[e]	0.00871	(0.0938)[f]	0.008722	(0.3080)[g]	48.8	(107.6)[h]
Secondary side including tie	10.410	(34.154)	0.02063	(0.2221)	0.2193	(7.7449)	891.94	(1966.8)[i]
rods and baffle plates (6)	-	-	0.00057	(0.0061)	-	-	-	-
UNBROKEN LOOP PUMP LOOP SEAL								
Downhill leg								
-- Steam generator exit nozzle	0.286	(0.938)	0.00348	(0.0375)	0.000997	(0.0352)	10.7	(23.6)
-- Downhill pipe	3.4122	(11.195)	0.00477	(0.0513)	0.01628	(0.5747)	41.2	(90.8)
Horizontal leg								
-- Large pipe	1.737	(5.699)	0.00477	(0.0513)	0.008278	(0.2923)	34.1	(75.2)
-- Flowmeter spool	2.197	(7.208)	0.00190	(0.0204)	0.004165	(0.1470)	25.5	(56.2)
Uphill leg	3.1388	(10.298)	0.00477	(0.0513)	0.01496	(0.5284)	54.46	(120.1)
BROKEN LOOP PUMP LOOP SEAL								
Downhill leg								
-- Steam generator nozzle	0.273	(0.896)	0.00113	(0.0122)	0.000309	(0.0109)	3.5	(7.8)
-- Downhill pipe	3.4384	(11.281)	0.00148	(0.0159)	0.0051	(0.1793)	76.46	(168.6)

c. Includes pipe section below bottom of heated length elevation and elbow
e. Active length
f. Most representative
g. Active volume
h. Including dead volume metal weights
i. Includes baffles, tie rods, shell, flanges, and end cap

TABLE 6-1 (cont)
FLECHT SEASET NATURAL CIRCULATION AND REFLUX CONDENSATION
SYSTEMS EFFECTS TEST FACILITY COMPONENT DIMENSIONS

Component	Length/Height [m (ft)]		Flow Area [m^2(ft^2)]		Fluid Volume [m^3 (ft^3)]		Metal Mass [kg (lb)]	
BROKEN LOOP PUMP LOOP SEAL (cont)								
Horizontal leg								
-- Large pipe	2.490	(8.169)	0.00158	(0.0170)	0.003956	(0.1397)	63.44	(139.9)
-- Flowmeter spool	1.422	(4.667)	0.00068	(0.0073)	0.000968	(0.0342)	13.4	(29.6)
Uphill leg								
-- Large pipe	2.762	(9.063)	0.00158	(0.0170)	0.004390	(0.1550)	71.74	(158.2)
-- Small pipe	0.3661	(1.201)	0.00131	(0.0141)	0.000479	(0.0169)	4.2	(9.3)
COLD LEG								
Unbroken loop	8.3037	(27.243)	0.00426	(0.0459)	0.035389	(1.2496)	167.6	(369.6)
Broken loop	6.7525	(22.154)	0.00131	(0.0141)	0.008935	(0.3155)	33.4	(73.6)
DOWNCOMER								
Downcomer extension [above 5.09 m (16.7 ft) elevation]	0.6224	(2.042)	0.01603	(0.1725)	0.01106	(0.3905)	87.07	(192.0)
Downcomer [from bottom of heated length to 5.09 m (16.7 ft) elevation]	5.0865	(16.688)	0.01603	(0.1725)	0.081380	(2.8736)	401.6	(885.6)

20616-47

NOTES:

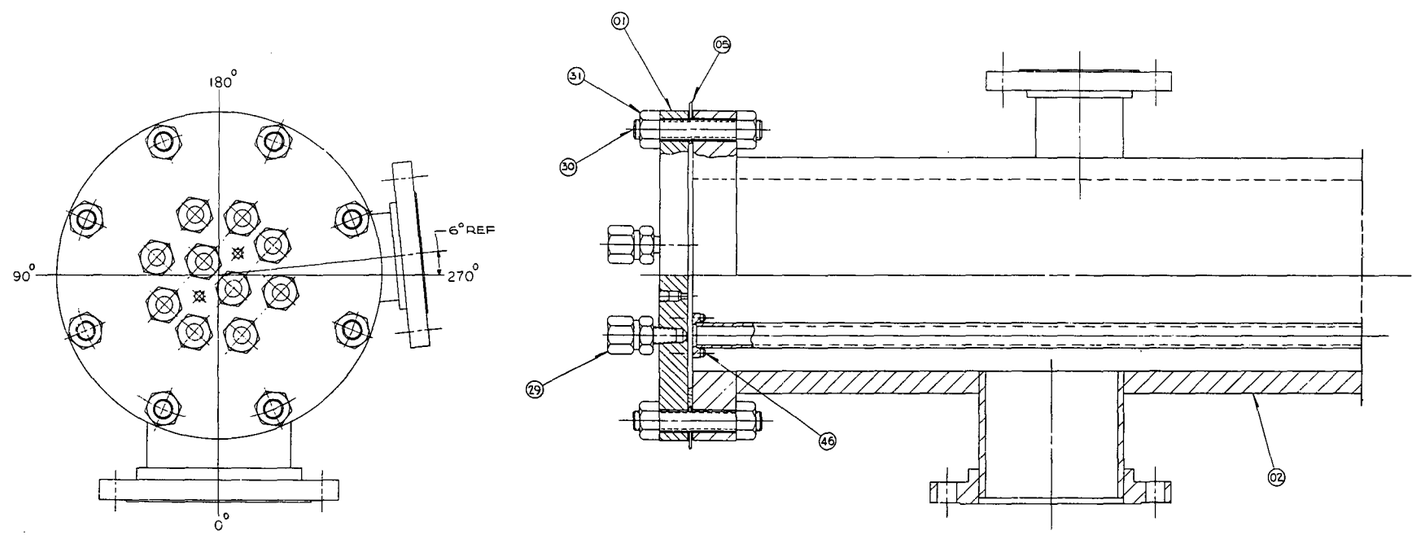

BILL OF MATERIAL

ITEM	SYM	PART NAME	DRAWING # OR OR TT.	MATERIAL	REQ. PER GROUP 01	02	03	04
01		TOP FLANGE	1546E29H01		1			
02		UPPER PLENUM	1550E78G01		1			
03		COLUMN	1546E28G01		10			
04		UPPER CORE PLT	1546E30G01		1			
05		GASKET	1546E27H04		4			
06		INST. RING	1546E26H01		1			
07		TERMINAL PLT	1546E34H01		1			
08		GROUND PLT	1546E25H01		1			
09		4 ROD TERM. ASSY	9550D68G01		33			
10		SINGLE ROD ASSY	9550D66H01		45			
11		HEATER ROD	1541E70		1/8			
12		THIMBLE	1546E31G01		2			
13		THIMBLE ARRANGE.	9556D28		1/8			
14		TEST HOUSING	1541E18G01		1			
15		LOWER PLENUM	1447E29G01		1			
16		LOWER SEAL PLT	1463F33H01		1			
17		BOTTOM COMB	1546E33G01		1			
18		GASKET	8764D55H06		2			
19		LOW MASS HOUSING	8764D55G02		1			
20		GRID	8763D58G01		7			
21		FILLER STRIP	1546E35H01		4			
22		FILLER STRIP	1546E35H05		4			
23		FILLER STRIP	1546E35H08		4			
24		FILLER STRIP	1546E35H04		4			
25		FILLER STRIP	1546E35H07		12			
26		FILLER STRIP	1546E35H03		12			
27		FILLER STRIP	1546E35H09		8			
28		FILLER STRIP	1546E35H02		8			
29	A	CONAX SEAL			10			
30	B	STUD .875-9UNC 2A × 6.00 LG			8			
31	C	NUT .875-9UNC			32			
32	B	STUD .875-9UNC 2A × 10.50 LG			8			
33	C	NUT .500-13UNC			36			
34		WASHER .500 STD		CS	36			
35		.190-32 × 1.75 LG SOC. HD CAP SCR			8			
36		.250-20 × 1.50 LG SOC. HD CAP SCR			16			
37		.190-32 × .62 LG SOC. HD CAP SCR			78			
38		WASHER .190 STD			78			
39		SCREW PAN HD #8-32 × .312 LG			3/8			
40	D	WASHER № D6-23 (.190 I.D. × .375 O.D.)			3/8			
41		T/C WELL	1546E28H04		3/8			
42		T/C ASSEMBLY	1546E28G02		3/8			
43		PLUG	1546E27H01		3/8			
44		PLUG	1546E27G02		3/8			
45	E	"O" RING (1.250 O.D. × .093 TUBE DIA.; INCONEL			3/8			
46		.250-20 × .750 LG SOC. HD CAP SCR			48			
47	D	ROLL PIN 1/8 O.D. × 1/8 LG C.S. 4			56			
48		STEAM PROBE	1546E31G02		3			
49		STEAM PROBE	1550E50G02		2			
50		STEAM PROBE	1550E50G06		1			
51		STEAM PROBE	1550E50G04		2			
52					1			
53					1			
54					1			
55		STEAM PROBE	1550E51G01		1			
56		STEAM PROBE	1550E51G02		1			
57		STEAM PROBE	1550E51G03		1			
58		STEAM PROBE	1550E51G04		2			
59		STEAM PROBE	1550E51G05		1			

A - MHM PACKING GLAND 3/4 NPT TEFLON SEALANT. B.O. CONAX CORP., 810 NOBLESTOWN RD PGH, PA. 15205
B - ASTM A193 GRADE B-7.
C - ASTM A194 GRADE 2H.
D - PIC DESIGN CORP., RIDGEFIELD, CT.
E - P.O. UNITED AIRCRAFT PROD., INC. DAYTON, OHIO 45401

Figure 6-3. FLECHT SEASET Natural Circulation Test Section Assembly (sheet 1 of 4)

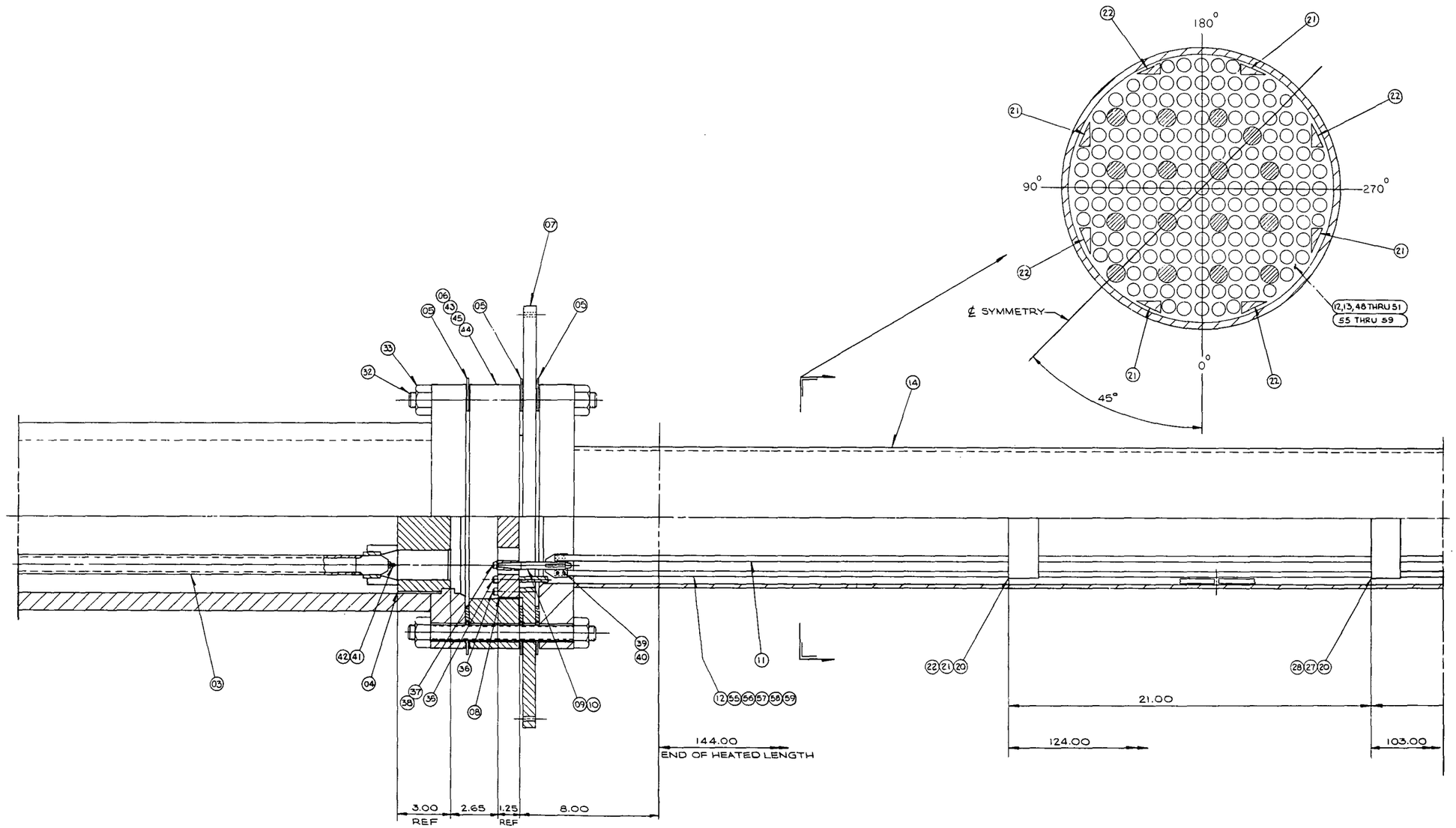

Figure 6-3. FLECHT SEASET Natural Circulation Test Section Assembly (sheet 2 of 4)

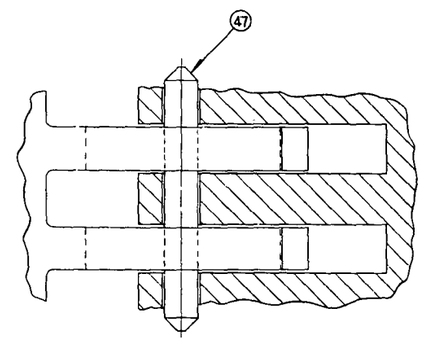

DETAIL - 'A'

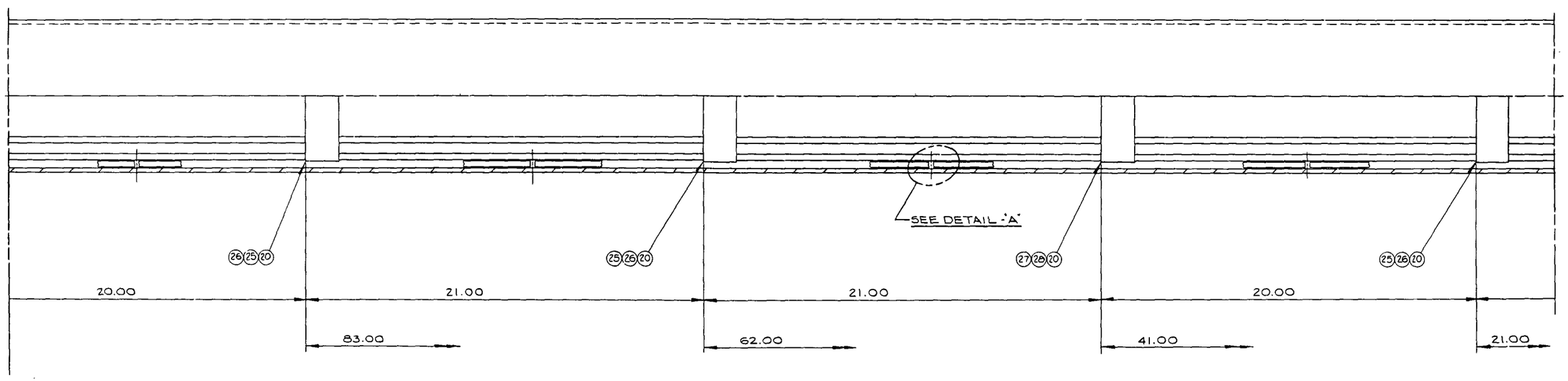

Figure 6-3. FLECHT SEASET Natural Circulation Test Section Assembly (sheet 3 of 4)

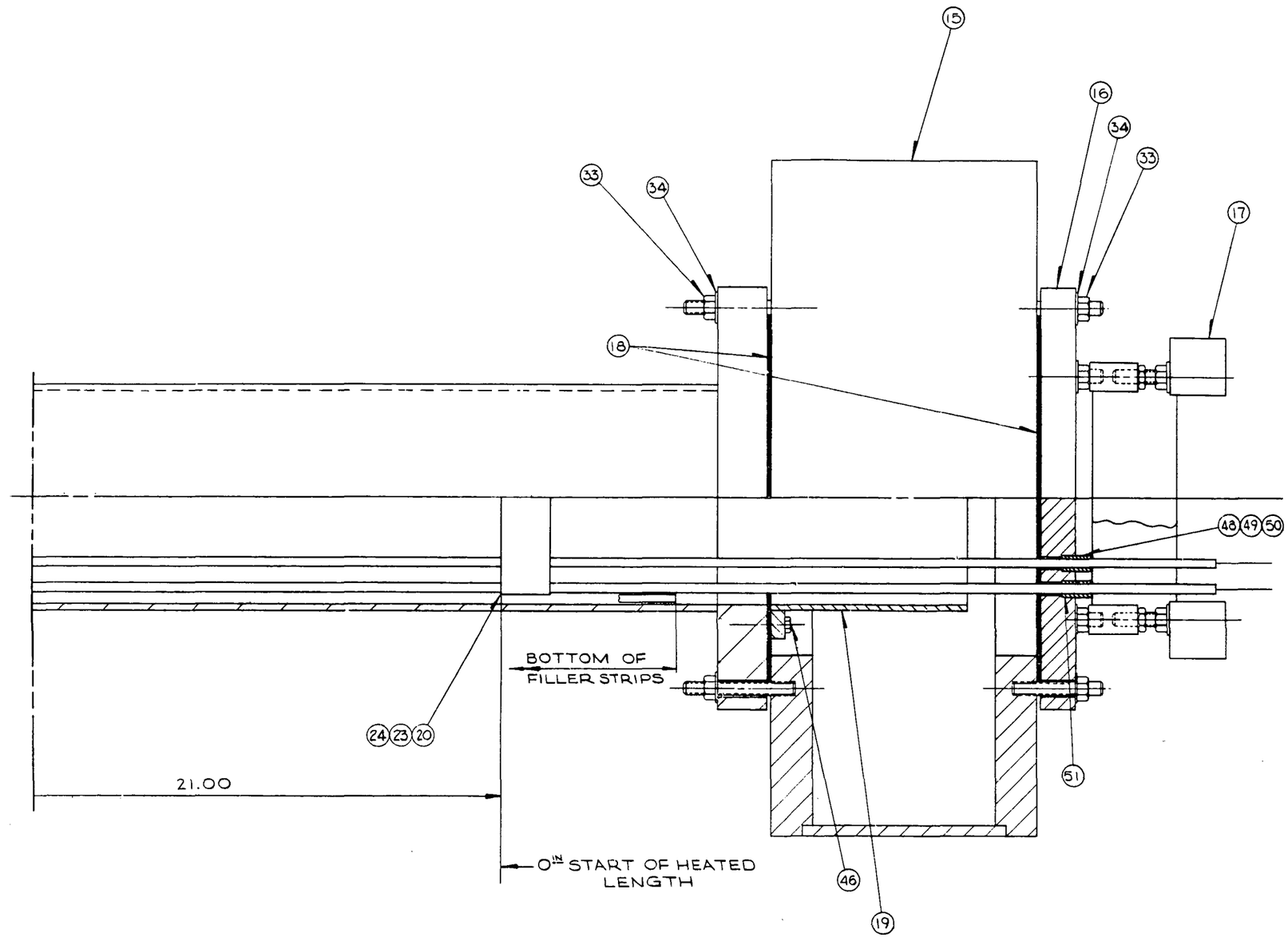

Figure 6-3. FLECHT SEASET Natural Circulation Test Section Assembly (sheet 4 of 4)

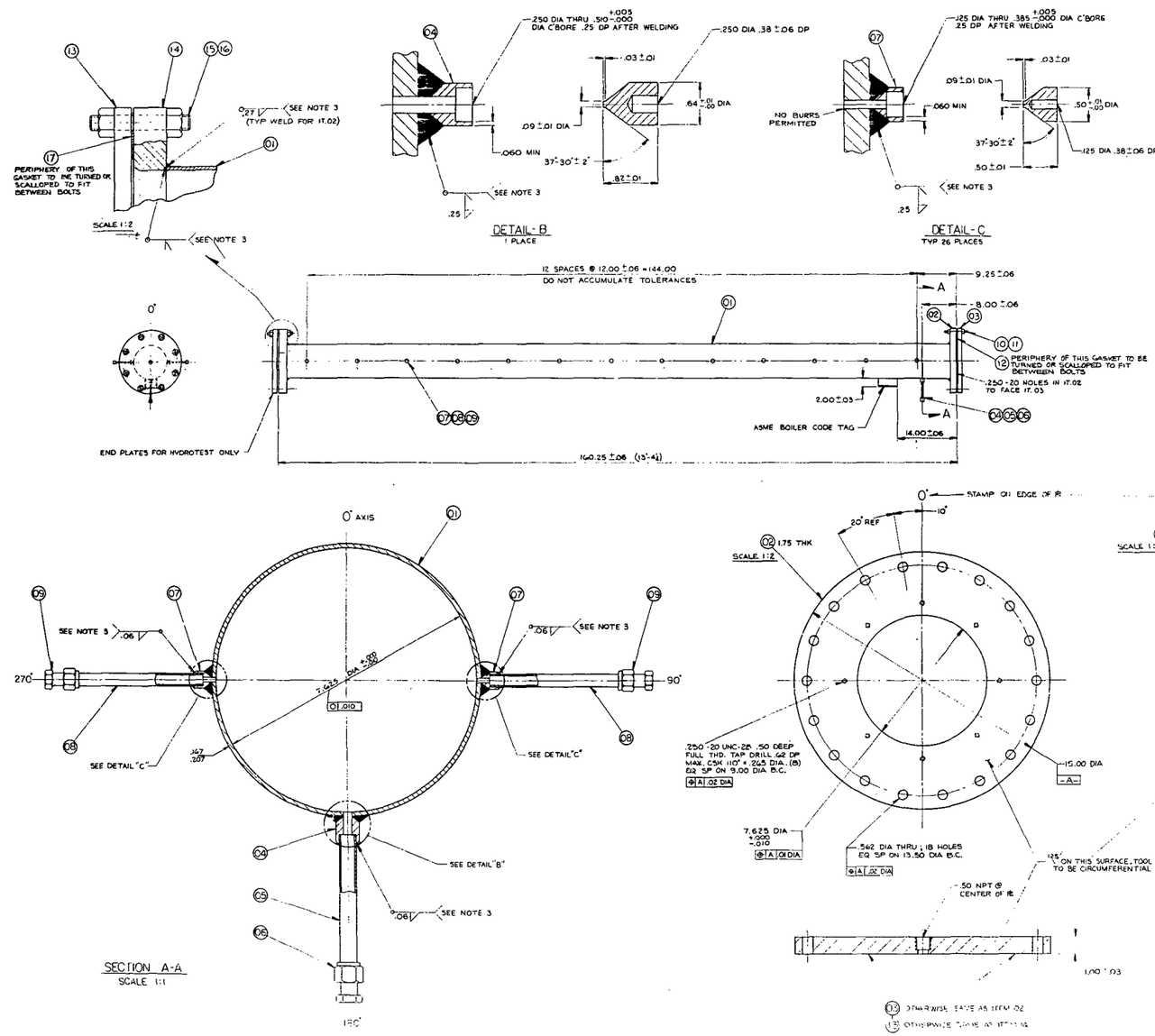

BILL OF MATERIAL									
ITEM	NOTE	PART NAME	DRAWING & GR OR IT	MATERIAL	REQ. PER GROUP				
					G1	G2	G3	G4	
01		PIPE 8.00 SCH 160		SA 312 TYPE 304	1				
02		FLANGE		SA 240 TYPE 304	1				
03		BLIND FLANGE		SA 240 TYPE 304	1				
04		COUPLING		304	1				
05		TUBING .500 OD x .049 W x 4.00 LG		SA 213 TYPE 304	1				
06	A	SWAGELOK CAP		SS-810-C	1				
07		COUPLING		SA 479 GR 304	26				
08		TUBING .375 OD x .049 W x 4.00 LG		SA 213 TYPE 304	26				
09	A	SWAGELOK CAP		SS-600-C	126				
10		.500-13 UNC x 6.00 LG ALL THD		C STL	18				
11		.500-13 UNC HEX NUT		C STL	36				
12	B	GASKET		CG-1R	1				
13		BLIND FLANGE		SA 240 TYPE 304	1				
14		FLANGE		SA 240 TYPE 304	1				
15		.875-9 UNC-2A x 6.00 LG. ALL THD		C STL	18				
16		.875-9 UNC-2B HEX NUT		C STL	164				
17	B	GASKET		CG-1GG	1				

A – PGH VALVE & FITTING CO; PGH PA.

B – FLEXITALLIC GASKET CO; CAMDEN, N.J.

NOTES

1 – WELD PER ≋ PWR PROC. SPEC. 292613-1.

2 – TO BE MADE PER ASME BOILER CODE SECTION I FOR 60 PSIG AT 1500°F PEAK TEMP @ MID ELEVATION, 1000°F @ FLANGES, ITEM 02 & 14

3 – WELD PER ≋ PWR PROC. SPEC. 292613. LIQUID PENETRANT EXAM PER ≋ P.S. 595139, QUALITY LEVEL A.

4 – HOUSING BODY TO BE STRAIGHT WITHIN .25 OVER ENTIRE LENGTH.

5 – FINISHED HOUSING I.D. MUST FREELY ACCEPT A PLUG GAGE OF 7.608 ±.002 DIA x 8" LG.

Figure 6-4. FLECHT SEASET Natural Circulation Low Mass Housing

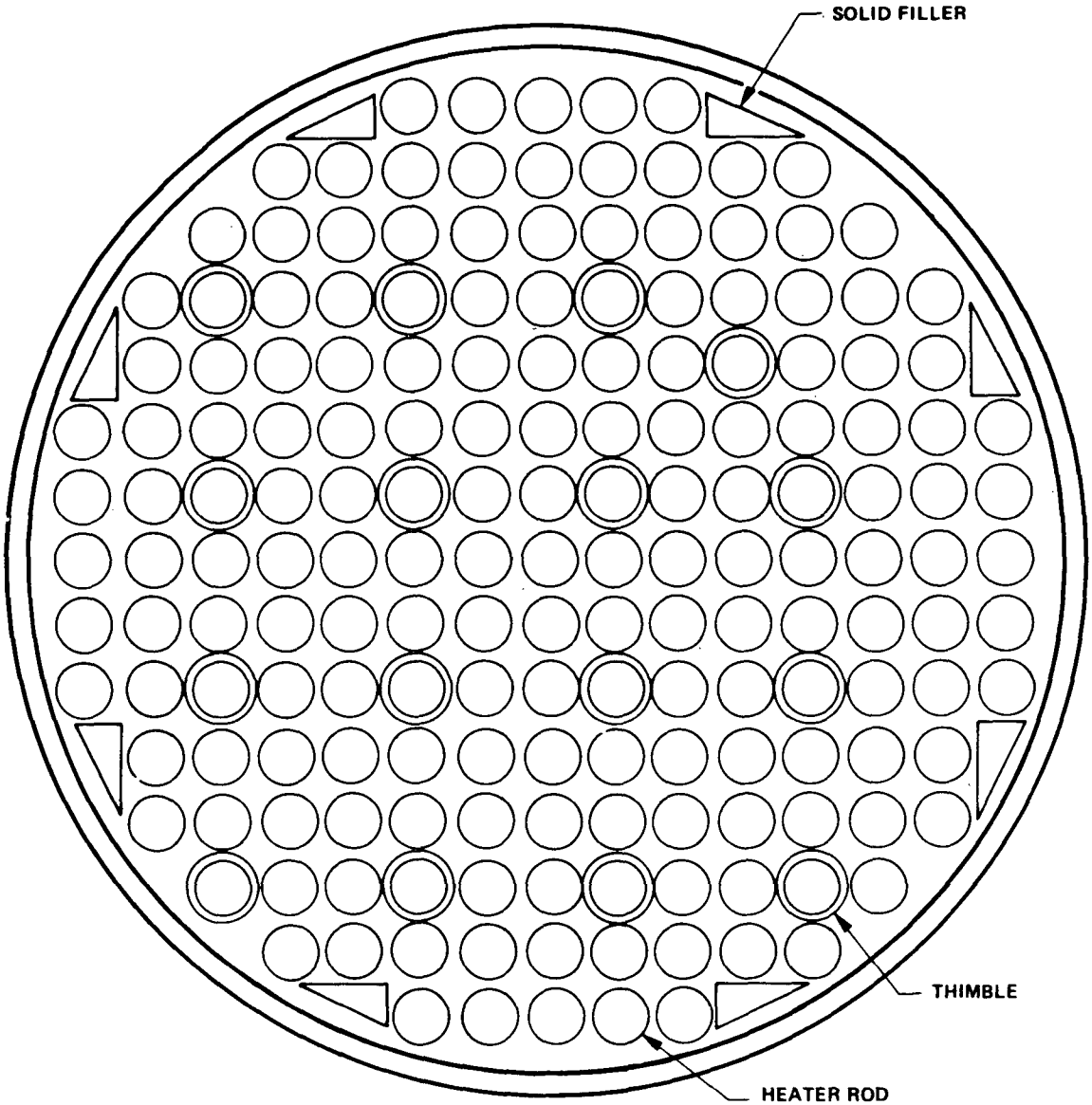

BUNDLE STATISTICS

HOUSING INSIDE DIAMETER	194.0 mm	7.625 in.
HOUSING WALL THICKNESS	4.78 mm	0.188 in.
ROD DIAMETER	9.50 mm	0.374 in.
THIMBLE DIAMETER	12.0 mm	0.474 in.
ROD PITCH	12.6 mm	0.496 in.
CROSS-SECTIONAL FLOW AREA	15476 mm^2	23.989 $in.^2$
FILLER DIMENSIONS	19.43 mm X 8.64 mm	0.765 in. X 0.340 in.
161 HEATER RODS	-	-
16 THIMBLES	-	-
8 FILLERS	-	-

Figure 6-5. FLECHT SEASET Natural Circulation Bundle Cross Section

BILL OF MATERIAL

ITEM	NO. REQ'D	PART NAME	DRAWING & GR OR IT.	MATERIAL	SIZE PER GROUP #1	#2	#3	#4
01	1	BODY FR 24" SCH 20 PIPE		SA106 GR B	1			
02	1	END PLATE		SA515 GR 70	2			
03	1	NOZZLE FR 5" SCH 80		SA106 GR B	1			
04	1	FLANGE 5-150 LB SLIP-ON		A105 GR II	1			
05	1	NIPPLE 2" SCH 80		SA 106 GR B	2			
06	1	NIPPLE ½ SCH 80		SA 106 GR B	1			
07	1	STUD ½-13 UNC-2A × 4" LG		SA193 B6/410	16			
08	1	STUD ½-13 UNC-2A × 3¼ LG		" "	16			
09	1	STUD ½-13 UNC-2A × 15" LG		" "	4			
10	1	LIFTING LUG		SA 36	1			
11	1	TUBE ⅝ O.D. × .049 W × 2¼		A 213	1			
12	1	BOSS		SA 105	1			
13	2	BOSS		SA 105	2			

NOTES:
1 - DESIGN, FABRICATE, TEST & STAMP PER SECT I OF THE ASME BOILER & PRESSURE VESSEL CODE.
2 - DESIGN PRESSURE 60 PSIG @ 700°F.
3 - IT. 04 MAY BE A SLIP-ON AS SHOWN, OR A WELD NECK OR A LONG NECK FLANGE.
4 - WELD PER W P.S. 82127-2V

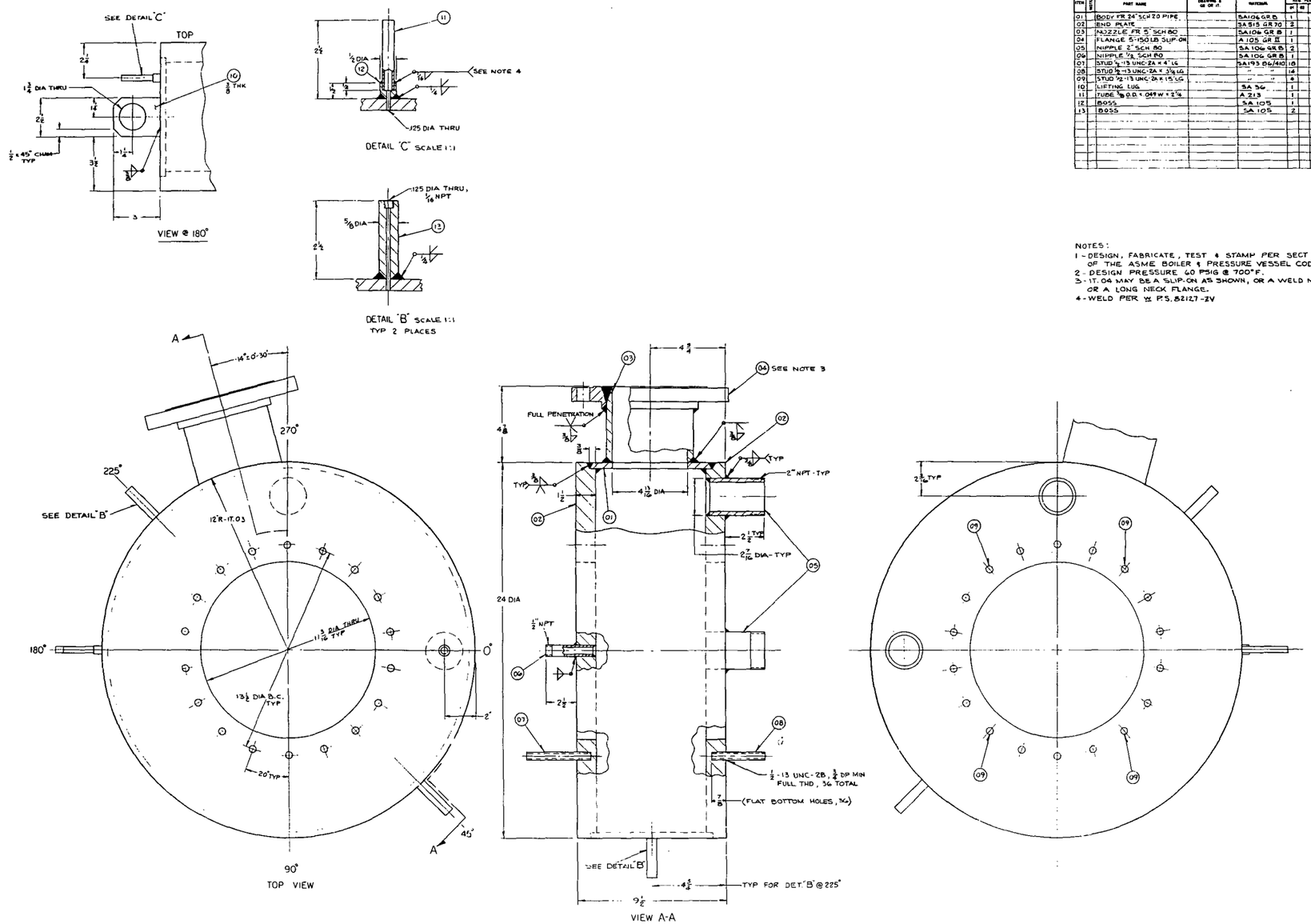

Figure 6-6. FLECHT SEASET Natural Circulation Lower Plenum

relatively independent of rod diameter where the diameter was greater than 50.8 mm (0.78 in.)

The phase separation efficiency of the plenum internals could be calculated by applying Gardner's formula.[1] Applied to the design of the FLECHT SEASET upper plenum, this correlation showed that four rows of internals resulted in a separation efficiency of almost 100 percent. Thus the separation efficiency of the prototype internal is matched by the FLECHT SEASET upper plenum internals.

The design of FLECHT SEASET upper plenum is shown in figure 6-7. The height of the upper plenum is less than that of the prototype upper plenum [1.33 m (52.5 in.) versus 2.13 m (83.7 in.)]. Flow pattern calculations indicated that there is a dead zone above the hot leg nozzles. This dead zone may increase the effects of phase separation by condensation on the walls and droplet deposition on the internals of the plenum. To prevent this, it was desirable to shorten the upper plenum. The flow area of the plenum is preserved but the volume is not. The height to the bottom of the hot leg nozzles is maintained to preserve the potential for froth buildup on the upper core plate.

Other features of the upper plenum are as follows:

-- The hot leg nozzles are positioned at an angle of 96 degrees on the centerline (figure 6-8).

-- The upper plenum contains 10 cylindrical internals arranged in the array shown in figure 6-8. The internals, 12.64 mm (1.125 in.) in diameter, are attached to the upper plenum top flange and to the upper core plate as shown in figure 6-3. Construction details of these columns are shown in appendix E, figure E-2.

-- Penetrations (windows) near the nozzles allow for optical probe and photography.

-- Connections for differential pressure cells along the plenum height allow determination of froth height.

---

1. Moore, M. J., et al., Two-Phase Steam Flow in Turbines and Separators, Hemisphere Publishing, Washington, DC, 1976.

6-5. Upper Core Plate

The upper core plate serves two purposes: it provides support for the upper plenum internals, and it atomizes droplets entrained from the core before they enter the upper plenum. The core plate is 7.6 cm (3 in.) thick with a flow area ratio typical of the prototype plant. The upper core plate dimensions are shown in figure 6-9. As previously stated (paragraph 6-4), the upper core plate dimensions preserve the steam velocities and should give a flooding phenomenon similar to that of the prototype plant.

6-6. Test Bundle

A cross section of the bundle is shown in figure 6-5. The bundle represents a section of a 17 x 17 fuel assembly. All dimensions representative of a 17 x 17 fuel assembly are preserved in the test bundle. These include the fuel rod pitch and the fuel rod diameter. The bundle comprises 161 heater rods (111 uninstrumented and 50 instrumented), 2 instrumented thimbles, 14 steam probe thimbles, and 8 triangular fillers.

Details of the heater rod design are shown in figure 6-10. In this figure, groups 6 and 12 are uninstrumented rods, and groups 7, 8, 9, and 10 are instrumented rods. The thermophysical properties of the heater rod materials are listed in table 6-2. The heater rods are of the single-ended design, in which the upper end of the heated element is grounded to the cladding by a solid conductor, which in turn is connected to a common ground plate by either a four- or a single-nickel terminal. The single-ended design was needed to provide better scaling and simulation of the upper plenum and its internals. However, with this design, the cladding thermocouple leads can only be brought out through the lower end. The heater has a maximum capacity of 8 kilowatts at 270 volts ac.

The bundle fillers are split and pin-connected at the midspan between grids. Filler detail drawings are given in appendix E. The fillers are welded to the grids to maintain the proper grid spacing. The fillers are employed to reduce the excess flow area caused by the cylindrical housing and the bundle square pitch array. The bundle excess flow area is 4.7 percent with fillers and 9.3 percent without fillers. The bundle area in a plane without grids is 0.015478 m^2 (23.989 $in.^2$). The bundle grids are of the simple egg-crate design. The grid straps are made from stamped Inconel straps 0.38 mm (0.015

20616-101

BILL OF MATERIAL								
ITEM	NOTE	PART NAME	DRAWING & GR OR FT.	MATERIAL	REQ PER GROUP			
					01	02	03	04
01		TOP FLANGE			1			
02		PIPE 10" SCH 140			AR			
03		BOTTOM FLANGE			1			
04		PIPE 6" SCH 40			AR			
05		FLANGE 6"-150# S.O.			1			
06		PIPE 3.50" SCH 40			1			
07		FLANGE 3.50"-150# S.O.			1			
08		BOSS			5			
09		HALF COUPLING 1.00 NPT - 3000#			2			
10		BOSS			2			

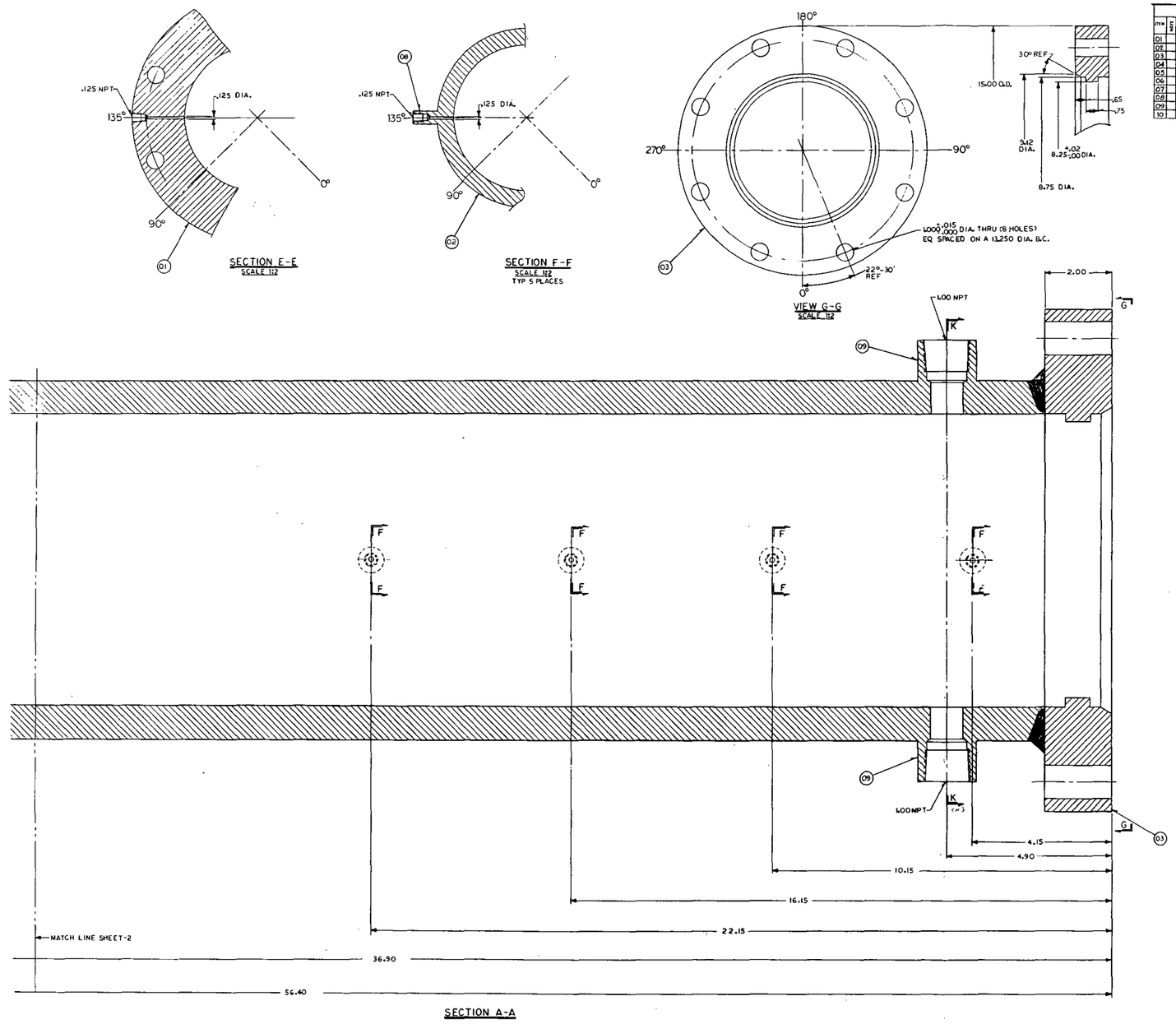

Figure 6-7. FLECHT SEASET Natural Circulation Upper Plenum (sheet 1 of 3)

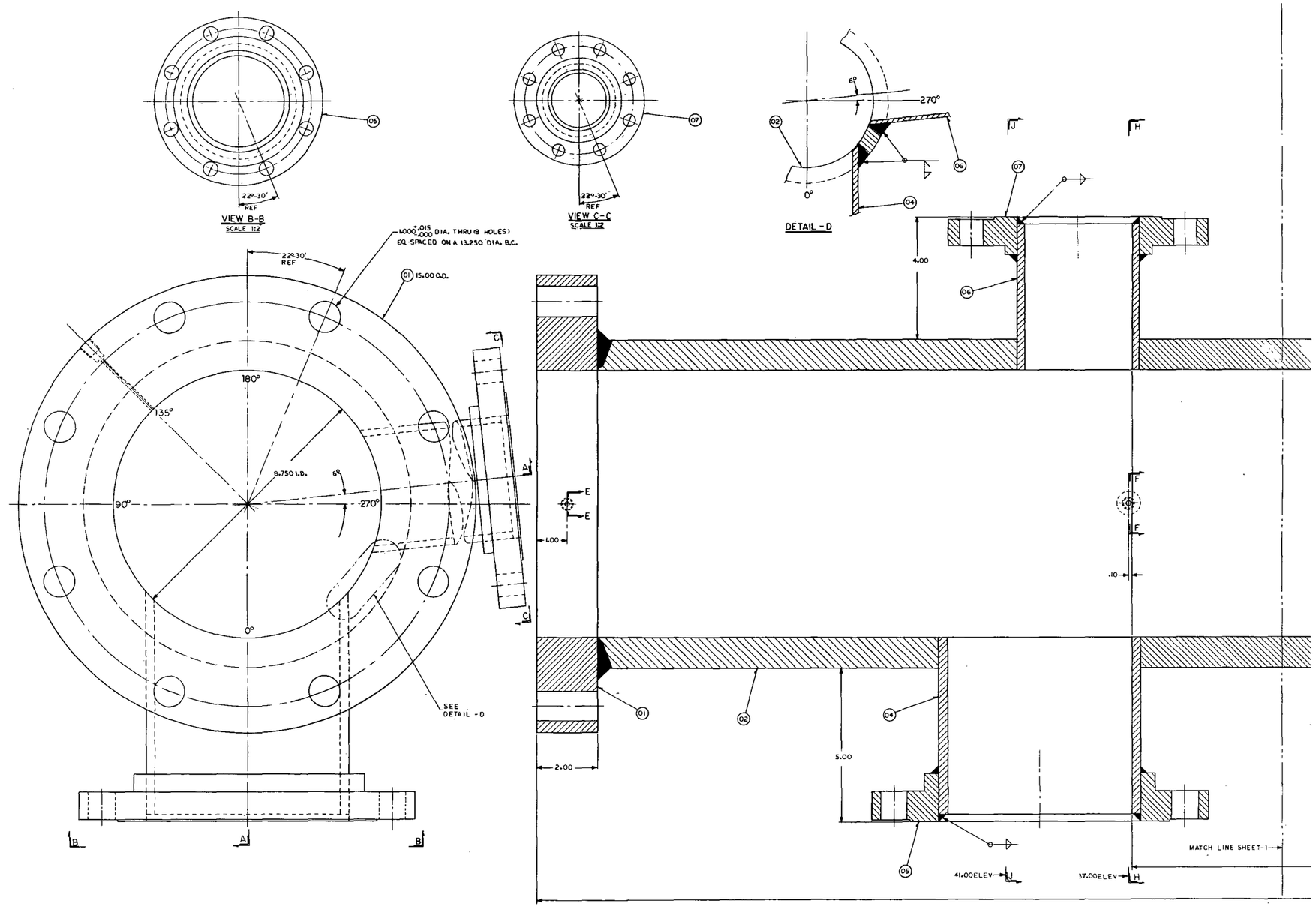

Figure 6-7. FLECHT SEASET Natural Circulation Upper Plenum (sheet 2 of 3)

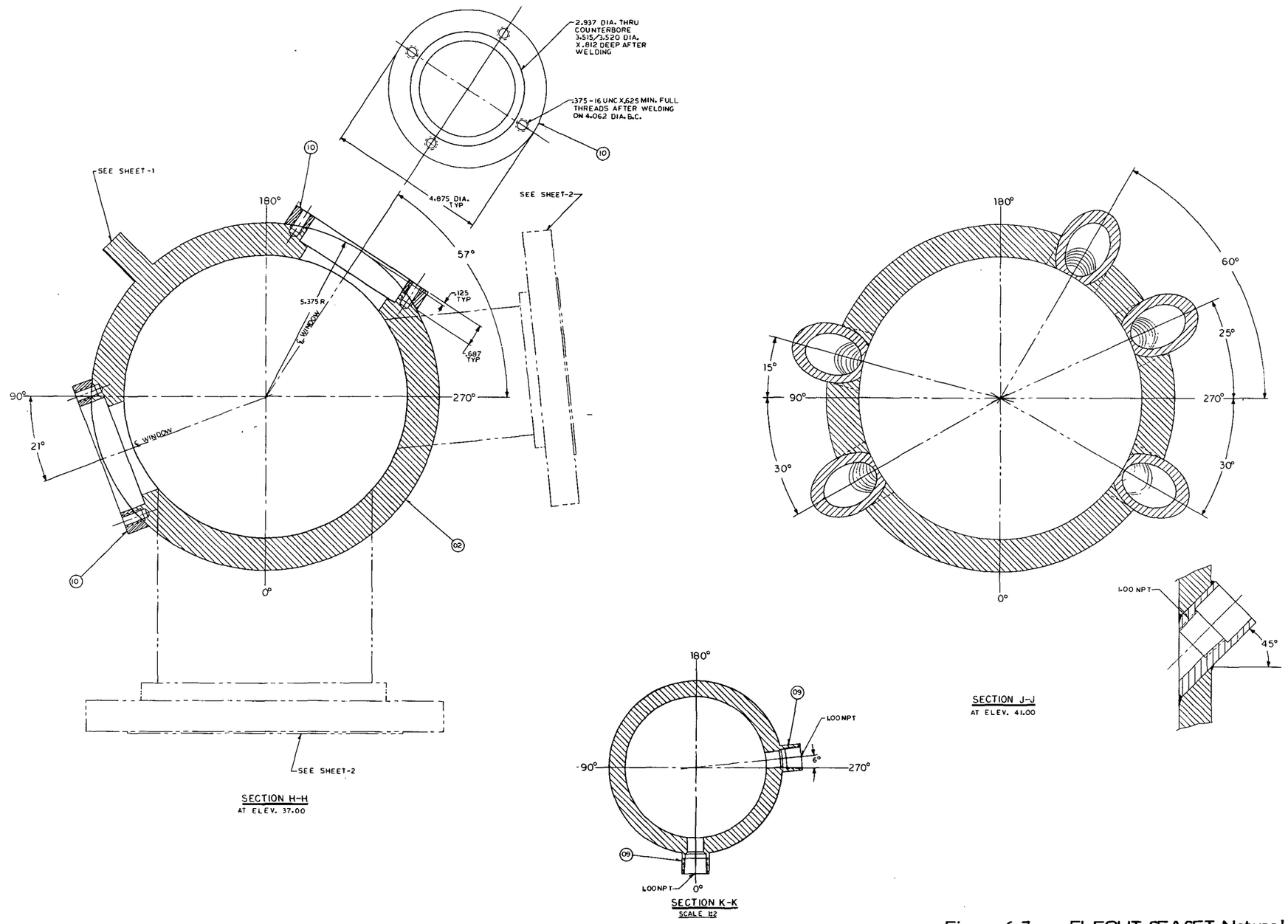

Figure 6-7. FLECHT SEASET Natural Circulation Upper Plenum (sheet 3 of 3)

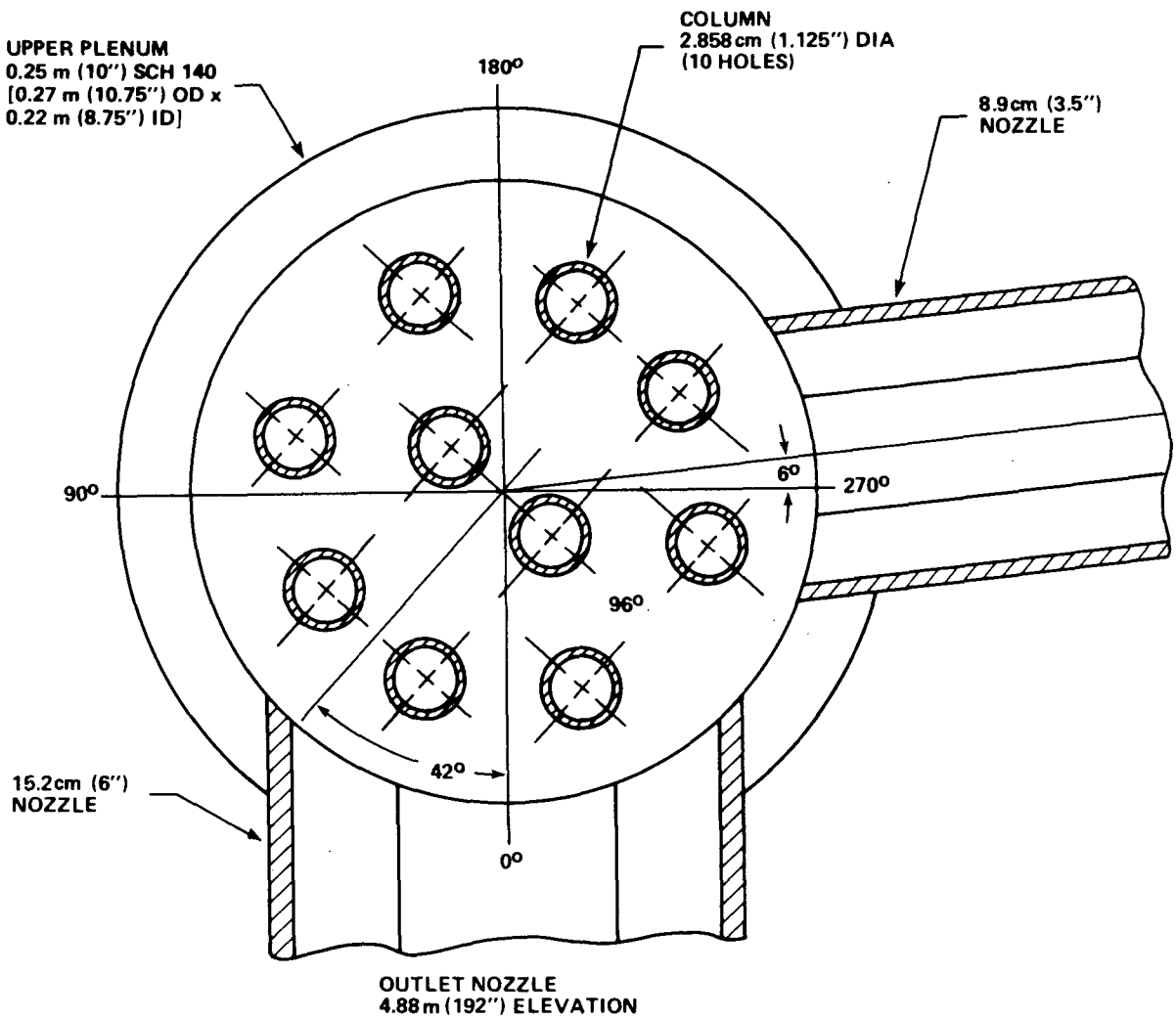

Figure 6-8. Upper Plenum Hot Leg Nozzle and Internal Column Arrangement

in.) thick with hemispherical dimples to center the heaters and maintain the bundle rod pitch of 12.6 mm (0.496 in.). The grids further reduce the bundle area by about 22 percent. Grid detail and drawings are included in appendix E.

The bundle thimbles are 304 stainless steel tubes with an outside diameter of 12.0 mm (0.474 in.) and 0.91 mm (0.036 in.) wall thickness. Most of the thimbles are instrumented with aspirating steam probes, and bare and heated fluid and wall thermocouples. Thimble design details are included in appendix E.

6-7. Ground Plate (Fuel Nozzle Simulator)

The ground plate for the single-ended heater rods of the systems effects facility will also simulate the end nozzle of PWR fuel assembly. The ground plate flow area to core flow area ratio is typical of the PWR fuel rod nozzle flow area to core flow area ratio. The ground plate (figure 6-11) has a flow area of 0.011498m^2 (17.821 in.^{2}).

6-8. Steam Generators

The systems effects facility contains two active steam generators, one each in the simulated broken and unbroken loops. Descriptions of these steam generators are given in the following paragraphs.

6-9. Unbroken Loop Steam Generator - The steam generator used for the unbroken loop is the large steam generator simulator used in the FLECHT-SET Phase B test program.[1] Figure 6-12 shows details of construction of the generator.

Certain modifications were made to the generator for the separate effects task.[2] All but one of the spare tubes previously plugged for the FLECHT-SET Phase B test series were opened. A total of 32 of 33 tubes were needed to preserve, as closely as possible,

1. Cleary, W. F., et al., "FLECHT-SET Phase B System Design Description," WCAP-8410, October 1974.

2. Howard, R. C., et al., "PWR FLECHT SEASET Steam Generator Separate Effects Task: Task Plan Report," NRC/EPRI/Westinghouse-2, March 1978.

20616-65

BILL OF MATERIAL								
ITEM	NOTE	PART NAME	DRAWING & REV. NO.	MATERIAL	NO. PER GROUP			
01		PLATE		C.STL	1			
02		TUBE		C.STL	10			
03		GUSSET		C.STL	40			
04		DOWEL PIN .0937/.0939 DIA × .50 LG		C.STL	20			

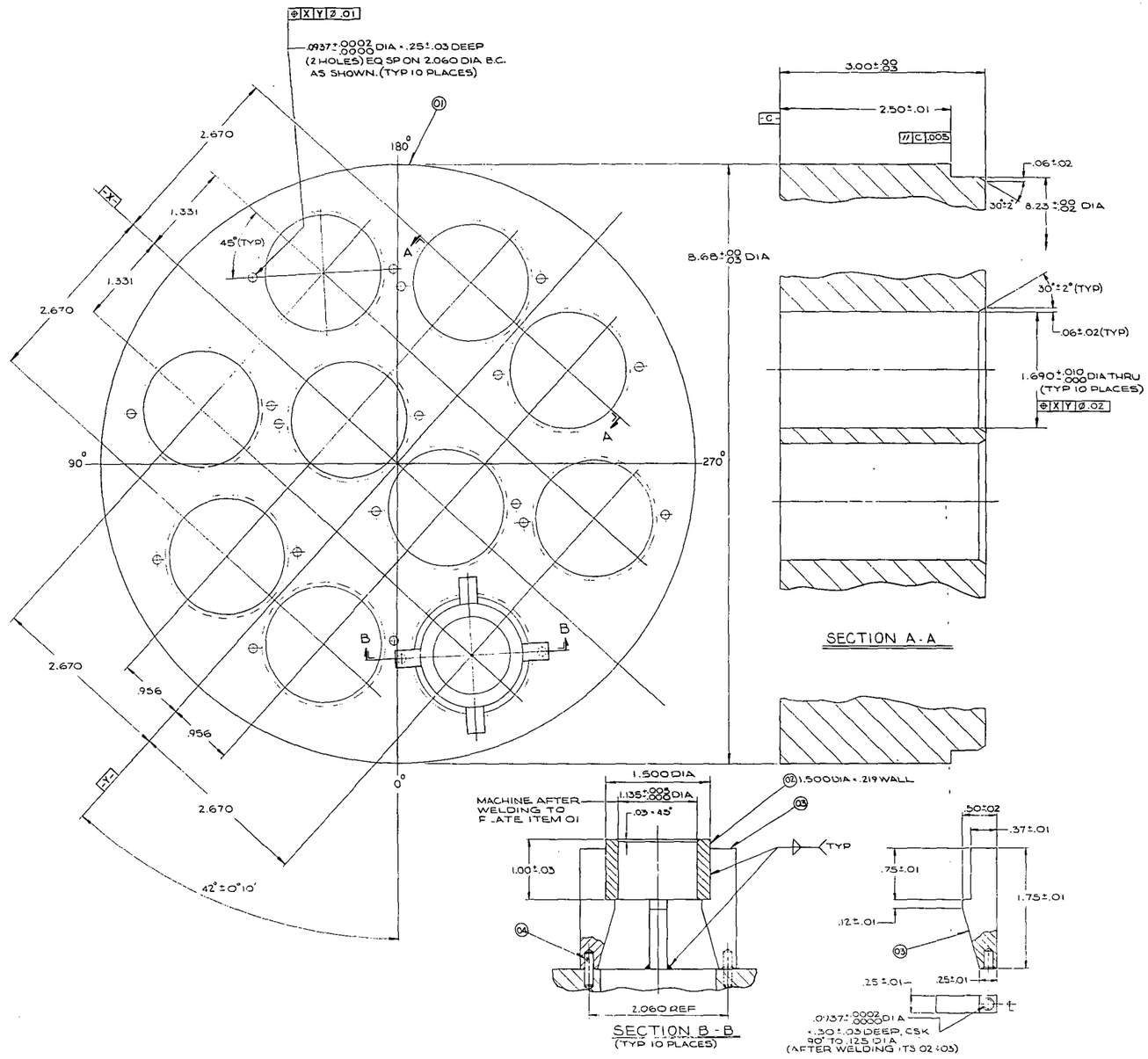

Figure 6-9. FLECHT SEASET Natural Circulation Upper Core Plate

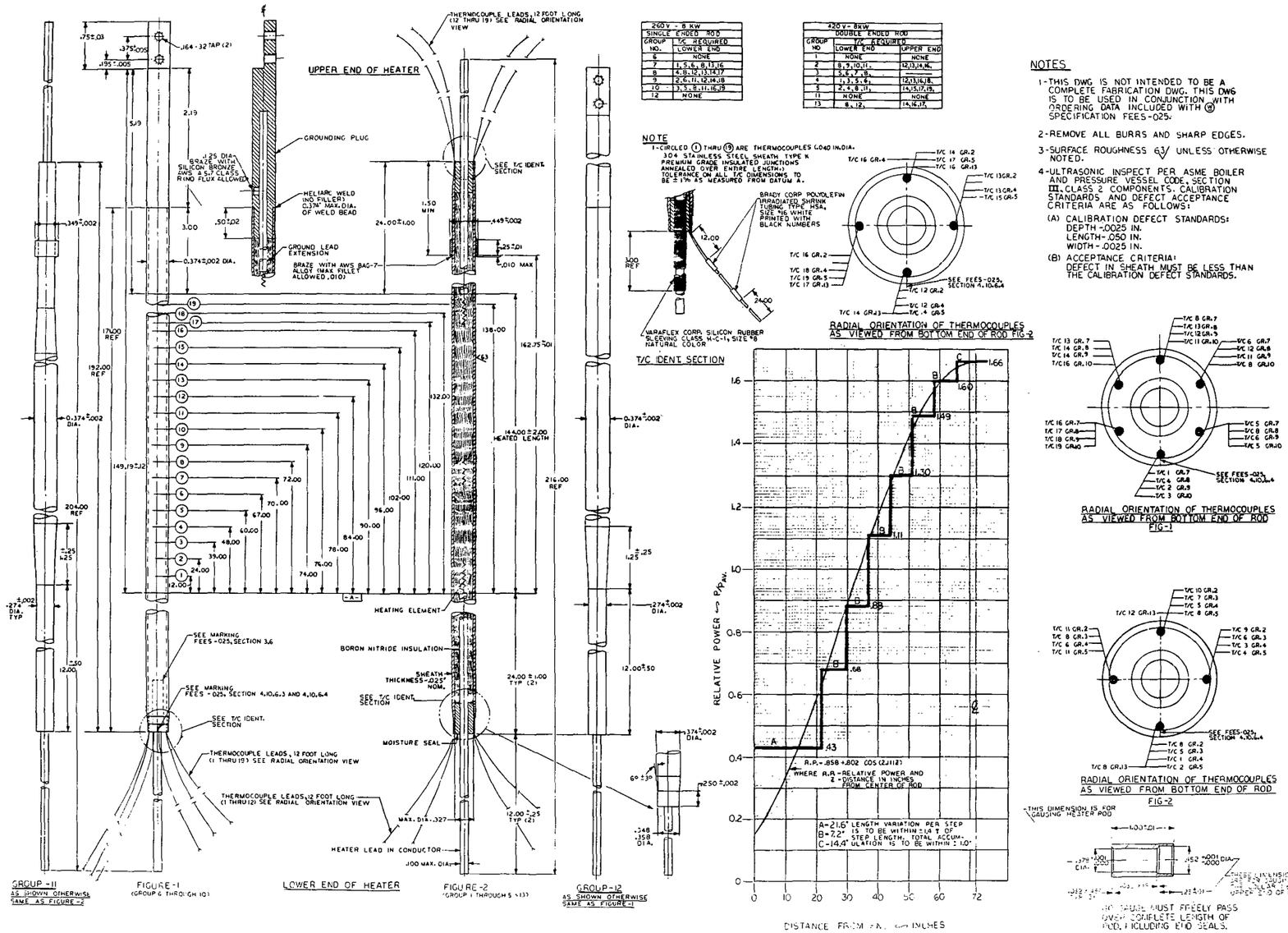

260V - 8 KW SINGLE ENDED ROD	
GROUP NO.	T/C REQUIRED LOWER END
6	NONE
7	1,5,6,8,13,16
8	4,8,12,13,14,17
9	2,6,11,12,14,18
10	3,5,8,11,16,19
12	NONE

420V - 8KW DOUBLE ENDED ROD		
GROUP NO	T/C REQUIRED LOWER END	UPPER END
1	NONE	NONE
2	8,9,10,11,	12,13,14,16,
3	5,6,7,18,	—
4	1,3,5,6,	12,13,16,18,
5	2,4,8,11,	14,15,17,19,
11	NONE	NONE
13	8,12,	14,16,17,

Figure 6-10. FLECHT SEASET Natural Circulation Single-Ended Heater Rod Design

TABLE 6-2

FLECHT SEASET NATURAL CIRCULATION AND REFLUX CONDENSATION

THERMOPHYSICAL PROPERTIES OF HEATER ROD MATERIALS

Material	Density [kg/m^3(lbm/ft^3)]	Specific Heat [J/kg-^{o}C(Btu/lbm-^{o}F)]	Thermal Conductivity [w/m-^{o}C(Btu/hr-ft-^{o}F)]
Kanthal A-1	2898.70 (180.96)	456.36 + 0.45674 T for T $\leq$ 649°C (0.109 + 0.000059 T for T $\leq$ 1200°F) 4161.68 - 3.843 T for 649°C <T <871°C (0.994 - 0.00051 T for 1200°F < T < 1600°F) 664.86 + 0.0904 T for $\geq$ 871°C (0.1588 + 0.000012 T for T $\geq$ 1600°F)	16.784 + 0.0134 T (9.7 + 0.0043 T)
Boron nitride	2212.15 (138.1)	2017.74 - 1396.26E-0.00245 T (0.48193-0.333492E-0.0013611 T)	25.571 - 0.00276 T (14.778 - 0.0008889 T)
Stainless steel 347	8025.25 (501.0)	443.8 + 0.2888 T for T < 315°C (0.106 + 3.833 x 10^{-5} T for T < 599.25^{o}F) 484.4 + 0.1668 T for T $\geq$ 315°C (0.1157 + 2.2143 x 10^{-5} T for T $\geq$ 599.25^{o}F)	14.535 + 0.01308 T (8.4 + 0.0042 T)

possible, the flow area scaling relationship, because of increasing the heater rod bundle flow area in the FLECHT SEASET systems effects task. The tube chosen to remain plugged was tube E in figure 6-12. This tube was selected because it would be most strongly affected by edge effects of the shell on the steam generator secondary side and edge effects of the inlet plenum on the primary side.

Additional modifications were incorporated for the natural circulation test series. A 15 cm (6 in.) nozzle was added to the unbroken loop steam generator plenum for the unbroken loop hot leg connection. This was the largest possible nozzle that could be accommodated on the inlet plenum (figure 6-13). A nozzle was also added to the top of the secondary side of the steam generator to permit circulation of coolant during testing. An instrumentation ring with multiple radial penetrations was added between the tubesheet flange and the lower plenum section for bringing out primary side instrument leads.

6-10. Broken Loop Steam Generator - The steam generator used for the broken loop is the small steam generator simulator used in the FLECHT-SET Phase B test program. Figure 6-14 shows details of construction of the generator.

Certain modifications were made to conform the broken loop steam generator to the unbroken loop steam generator. All tubes in the broken loop steam generator were unplugged to increase the flow area to the scaled flow area. An instrumentation ring was added to bring out primary side instrumentation. Two sight glass nozzles were added to the outlet plenum of the steam generator. An 8.9 cm (3.5 in.) nozzle was added to the inlet plenum as shown in figure 6-15 for the broken loop hot leg connection. A nozzle was also added to the top of the secondary side of the steam generator to permit circulation of coolant during testing.

6-11. Steam Generator Secondary Side Cooling System

For the natural circulation series of tests, a secondary side circulation system was added to both steam generators, as shown in figure 6-16. This system consists of an expansion tank with a nitrogen overpressure for system pressure control by inlet and letdown regulators. Cooling was by demineralized water in a closed loop system.

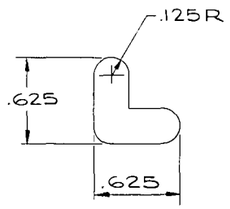

DETAIL - "A"
(4 PLACES)

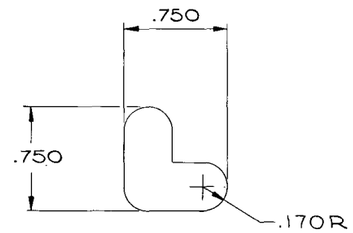

DETAIL - "B"
(8 PLACES)

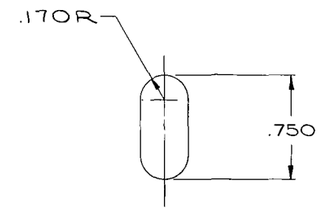

DETAIL - "C"
(6 PLACES)

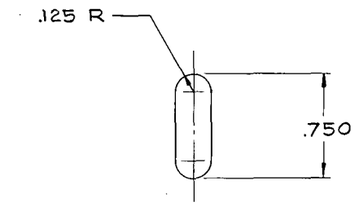

DETAIL - F
(1 PLACE)

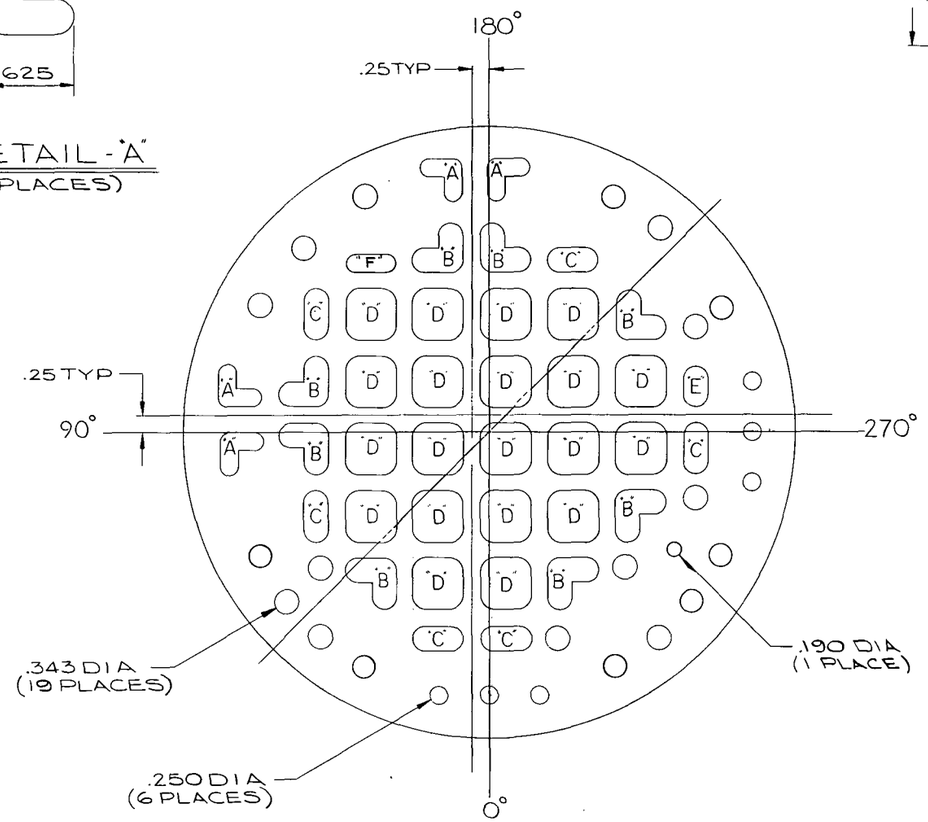

GROUND PLATE FLOW AREA
153 ELEV

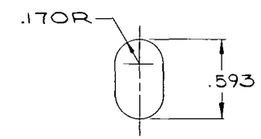

DETAIL - "E"
(1 PLACE)

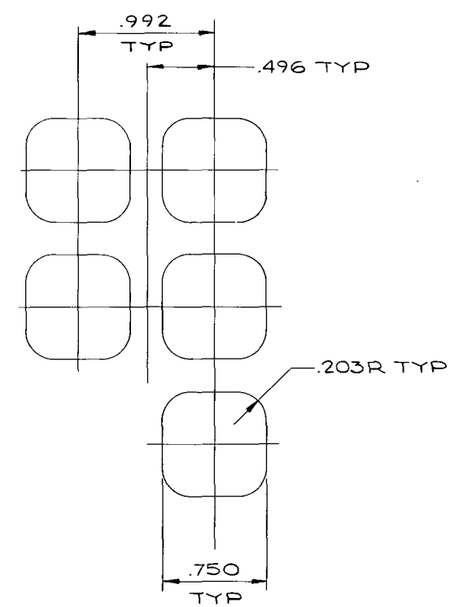

DETAIL - "D" (20 PLACES)

Figure 6-11. FLECHT SEASET Natural Circulation Rod Bundle Ground Plate

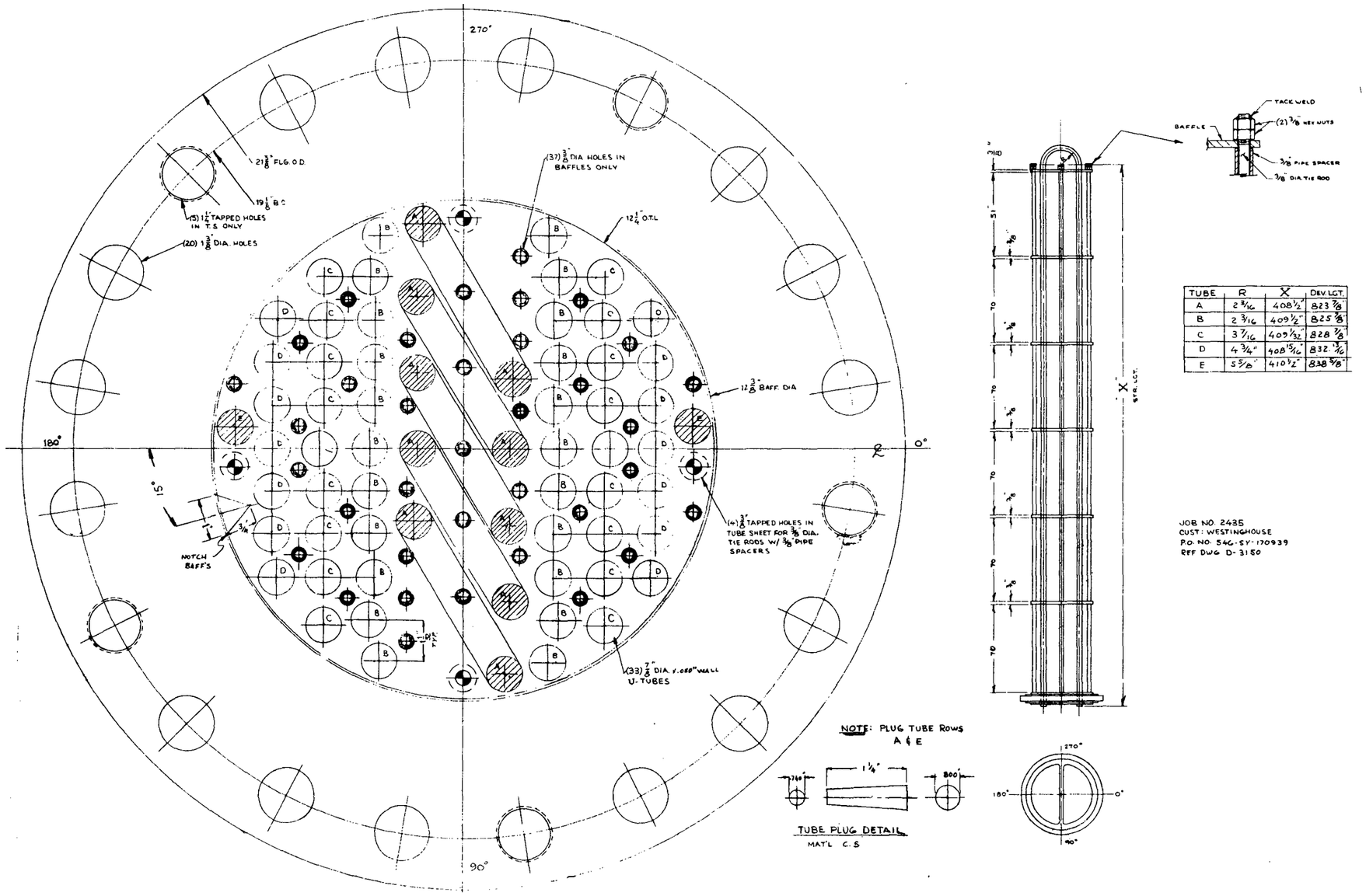

TUBE	R	X	DEV. LGT.
A	2 3/16	408 1/2	823 7/8
B	2 3/16	409 1/2"	825 7/8"
C	3 7/16	409 1/32"	828 7/8"
D	4 3/4"	408 15/16"	832 13/16
E	5 5/8"	410 1/2"	838 3/8"

Figure 6-12. FLECHT SEASET Natural Circulation Unbroken Loop Steam Generator Construction Details (sheet 1 of 2)

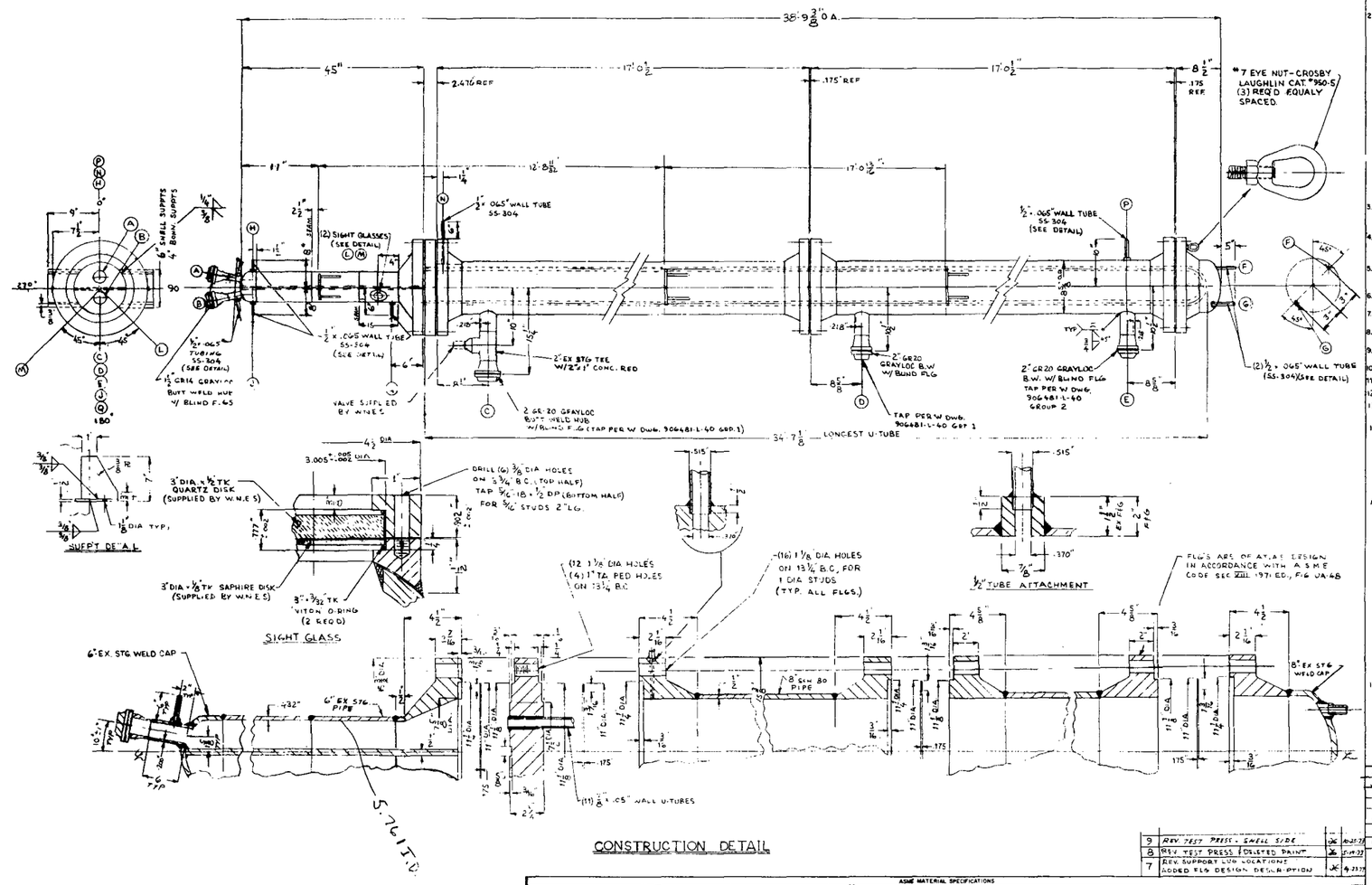

NOTES

1. CONSTRUCTION TO COMPLY WITH ASME CODE *SECTION VIII, 1971 ED. INCLUDING CERT. & STAMP. TEMA R * DIV 1 FOR INSTALLATION IN STATE OF
2. NAME PLATE STAMPING:

ATLAS INDUSTRIAL MFG. CO. CLIFTON, N.J.
DIV 1 PER
MAT'L BD. 1372
SERIAL 248 B
YEAR 1973
SHELL 900 PSI AT 600 °F
TUBES 1350 PSI AT 600 °F
JACKET PSI AT °F
P.O. NO. 546-SY-170939

3. TEST PRESSURE — SHELL SIDE 1350 PSI — TUBE SIDE 2025 PSI (1.25 X TUBES)
CORROSION ALLOW. .065
4. WEIGHTS:
EMPTY — 3100 LBS.
FULL OF WATER — 3850 LBS.
5. PAINT: NOT REQ'D
SANDBLAST: NOT REQ'D
6. [redacted]
7. STRESS RELIEVE: NOT REQ'D
8. RADIOGRAPHY: SPOT TUBE SIDE, SPOT SHELL SIDE
9. SPECIAL TESTS: NONE
10. CUSTOMER'S INSPECTION: REQ'D. (SEE NOTE 14)
11. TUBES TO BE SEAL WELDED TO TUBE SHEET
12. ALL TOL. PER T.E.M.A. R
13. THE NAME B. DESIGN COND. ARE SUBJECT TO CODE APPROVAL OF THE TUBE MAT'L.
14. INSPECTION POINTS
A. TUBE-SHEET AFTER DRILLING.
B. COMPONENT PARTS - BEFORE ASSEMBLY
C. AT HYDRO TEST.
15. REQ'D SHELL THK: $t = \frac{P \times R_s}{SE + .4P}$

$t = \frac{1300 \times 4.312}{(15000)(1) + (.4)(1300)} = .361$

$.361 + .065 = .426$

REQ'D SHELL HD THK: $t = \frac{P R_s}{SE + .9P}$

$t = \frac{1300 \times 4.312}{(15000)(1) + (.9)(1300)} = .346$

$.346 + .065 = .411$

16. ALL GRAYLOC B.W. HUBS TO INCLUDE CLAMP AND PT-24 COATED SEAL RING

CUSTOMER: WESTINGHOUSE ELEC. CO.
P.O. NO. 546-SY-170939
UNITS REQUIRED: ONE (1)
ATLAS JOB NO. 2436

REV.		BY	DATE
6	REV PER CUST MKD PRINT	JS	2-8-73
5	REV PER CUST MKD PRINT	JS	2-8-73
4	REV PER CUST MKD PRINT	JS	12-6-72
3	REV. TUBE THICKNESS FROM .065 TO .05	JS	12-1-72
2	REV TUBE SHEET REF DIM. & UNIT O.A.	JS	10-23-72
1	REV PER MEETING OF 10-16-72	JS	10-21-72
9	REV. TEST PRESS. - SHELL SIDE	JS	10-27-72
8	REV. TEST PRESS. & DELETED PAINT	JS	10-19-72
7	REV. SUPPORT LUG LOCATIONS ADDED FLG DESIGN DESCRIPTION	JS	4-23-72

ATLAS INDUSTRIAL MANUFACTURING CO.
81 SOMERSET PLACE
CLIFTON, N. J.

STEAM GENERATOR SIMULATOR
* B-411

SCALE	MADE	DATE	CKD.	APPD.	DRAWING NO.
1/2" = 1'-0"	JS	9-14-72			D-3138-1B

ASME MATERIAL SPECIFICATIONS

SHELLS			FACINGS			BONNETS CHANNELS			NOZZLE NECKS	C.S.	SA-106 B	STUDS	GASKETS
PIPE	C.S.	SA 53 B	EXPANSION JOINT			WELD CAPS	C.S.	SA-234	FITTINGS	F.S.	SA-105	☒ SA-193 GR B7	☐ COMPRESSED ASBESTOS
ROLLED PLATE			END PLATE			FORGED HEADS			COVERS ☐ FACED			☐ SA-193 GR	FIG ☒ DOUBLE JACKETED
BAFFLES	C.S.	SA-36	WELD CAPS	C.S.	SA-234	PIPE	C.S.	SA-53 B	TUBE SHEETS	C.S.	SA-515-70	NUTS	☒ FLEXITALLIC (C.S. & 304 S.S.)
TIE RODS	C.S.	SA-36	FORGED HEADS			PLATE			TUBES SEAMLESS	INCONEL	SB-163	☒ SA-194 GR 2H	SEALING STRIPS
SPACERS	C.S.	SA-106 B	UNIT FLANGES	F.S.	SA-105 II	UNIT FLANGES	F.S.	SA-105 II	NECKS FIG	SS-304	SA-249	☐ SA-193 CL 2	☐ 304 SS-18-8
NOZZLE FLG'S	F.S.	SA-105 II	FITTINGS, SCREWED	F.S.	SA-105	NOZZLE FLG'S			HJ				
NOZZLE NECKS	C.S.	SA 53 B	SUPPORTS	C.S.	SA-36	PASS. PART	C.S.	SA-36	NP				

Figure 6-12. FLECHT SEASET Natural Circulation Unbroken Loop Steam Generator Construction Details (sheet 2 of 2)

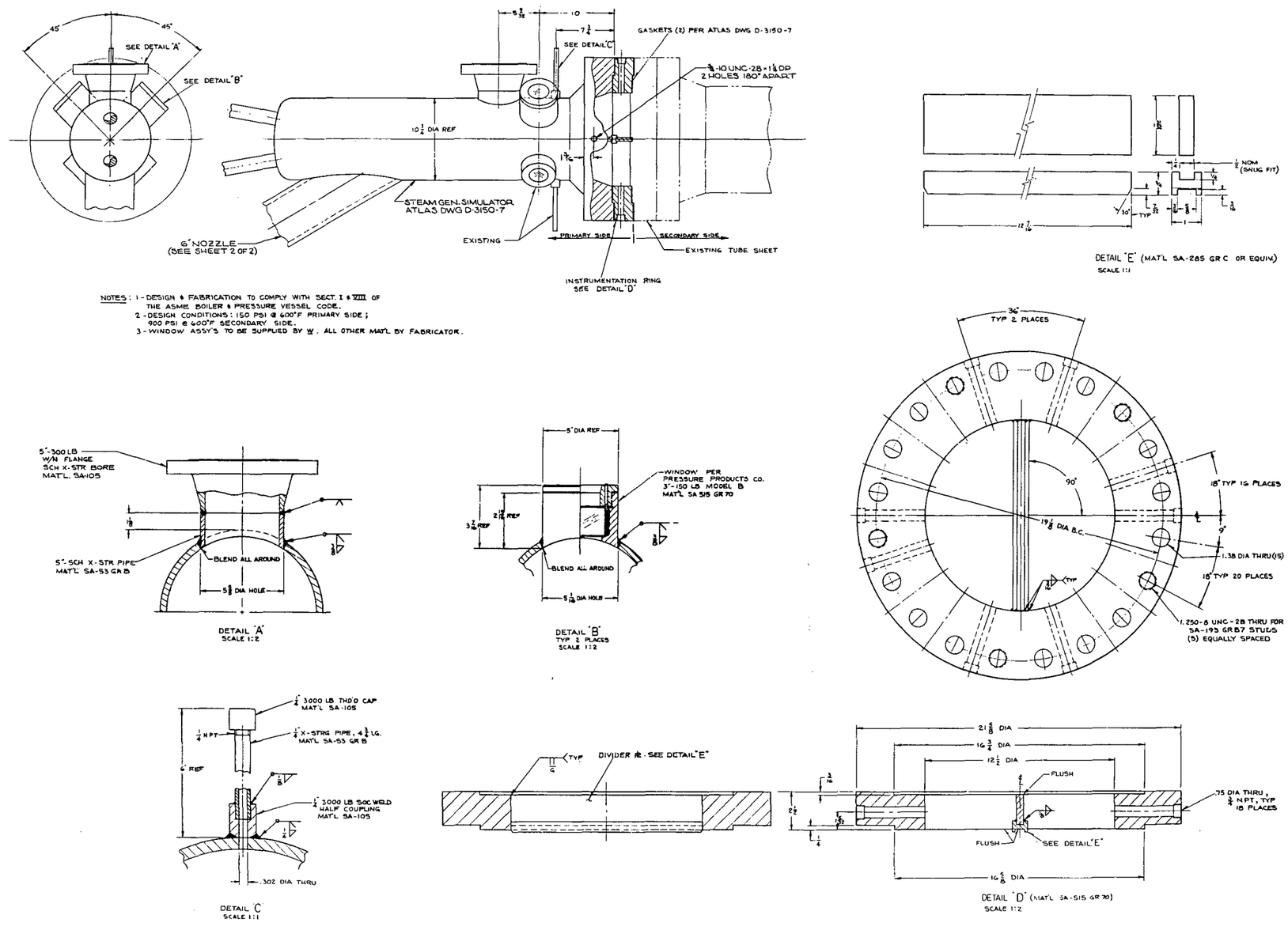

Figure 6-13. FLECHT SEASET Natural Circulation Unbroken Loop Steam Generator Modified Plenum

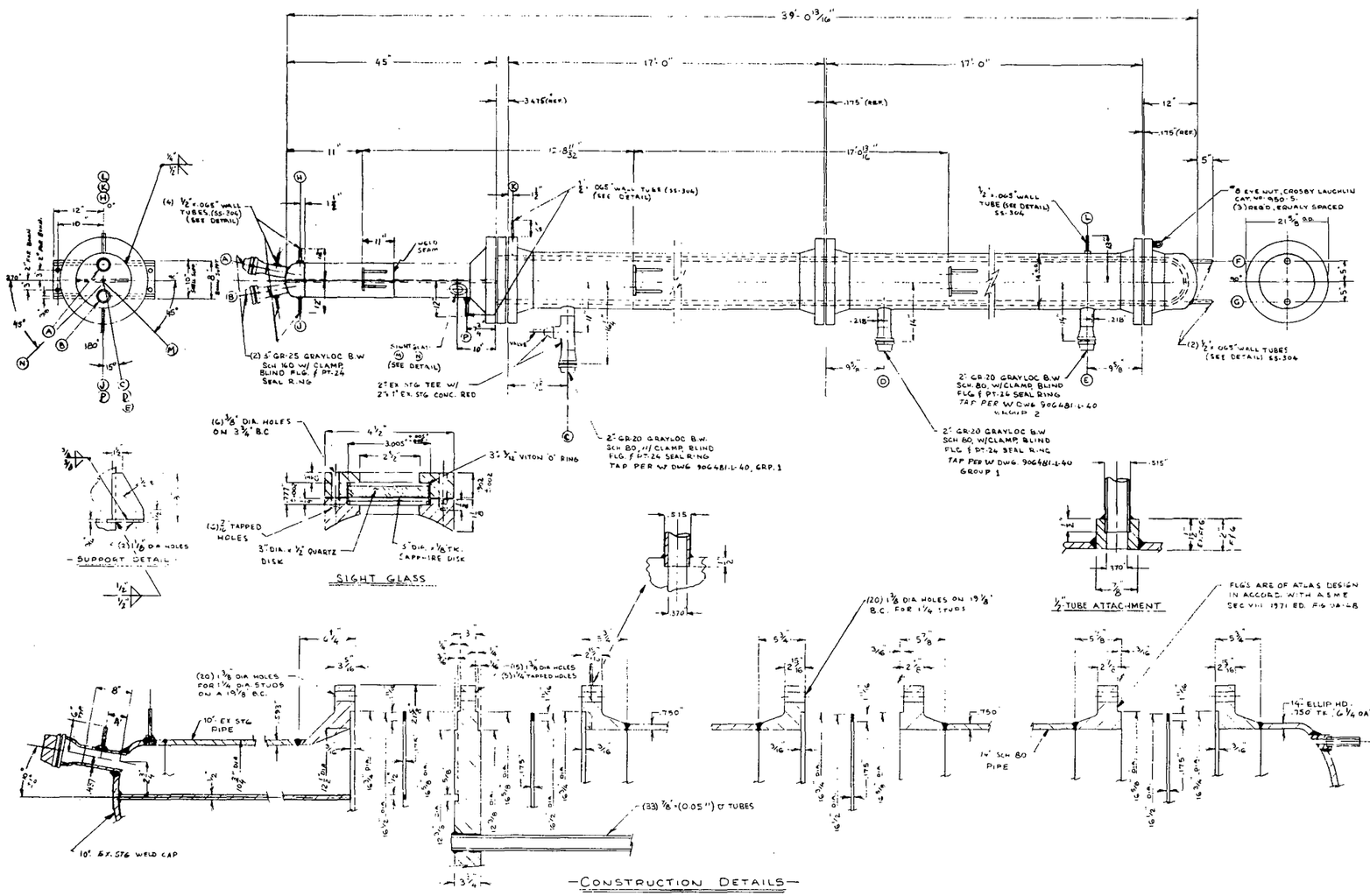

ASME MATERIAL SPECIFICATIONS														
SHELLS			FACINGS			BONNETS CHANNELS			NOZZLE NECKS	C/S	SA-53B	STUDS	GASKETS
PIPE	C/S(SMLS)	SA-53-B	EXPANSION JOINT			WELD CAPS			FITTINGS			☒ SA-193 GR B7	☐ COMPRESSED ASBESTOS
ROLLED PLATE			END PLATE			FORMED HEADS	C/S	SA-516-70	COVERS ☐ PACKED			☐ SA-193 GR	R-R ☒ DOUBLE JACKETED
BAFFLES	C/S	SA-36	WELD CAPS			PIPE	C/S(SMLS)	SA-53-B	TUBE SHEETS	C/S	SA-515-70	NUTS	☒ FLEXITALLIC (C/S)(ASB.)
TIE RODS	C/S	SA-36	FORMED HEADS	-		PLATE			TUBES SEAMLESS WELDED	INCONEL	SB-163	☒ SA-194 GR 2H	SEALING STRIPS
SPACERS	C/S	SA-120	UNIT FLANGES	F/S	SA-105-II	UNIT FLANGES	F/S	SA-105-II				☐ SA-192 CL.2	☐ 302 SS-18-8
NOZZLE FLG'S	F/S	SA-105-II	FITTINGS, SCREWED	F/S	SA-105	NOZZLE FLG'S	F/S	SA-105 II	PRESS TAPS	S/S 304	SA-249		
NOZZLE NECKS	C/S	SA-53-B	SUPPORTS	C/S	SA-36	PASS PART.	C/S	SA-36	SIGHT GLASSES	E.E.	SA-105F-C		

20616-27

NOTES

1. CONSTRUCTION TO COMPLY WITH ASME CODE SECTION VIII-1971 ED. INCLUDING CERT. & STAMP. TEMA R. FOR INSTALLATION IN STATE OF PA.
2. NAME PLATE STAMPING:

ATLAS INDUSTRIAL MFG. CO. CLIFTON, N.J.
NAT'L BD. 1906
SERIAL 2435
YEAR 1973
SHELL 900 PSI AT 600 °F
TUBES 150 PSI AT 600 °F
JACKET PSI AT °F
PO NO. 546-SY-170939

3. TEST PRESSURE — SHELL SIDE 1350 PSI — TUBE SIDE 225 PSI EX. TUBES
   CORROSION ALLOW. .065" — .065" EX. TUBES
4. WEIGHTS:
   EMPTY ——— 8250 LBS.
   FULL OF WATER ——— 10,150 LBS.
5. PAINT: NOT REQ'D
   SANDBLAST: NOT REQ'D
6. ———
7. STRESS RELIEVE: NOT REQ'D.
8. RADIOGRAPHY: SPOT TUBE SIDE & SHELL SIDE
9. SPECIAL TESTS: NONE
10. CUSTOMER'S INSPECTION: REQ'D. (SEE NOTE 14
11. TUBES TO BE SEAL WELDED TO T.S.
12. ALL TOL. PER TEMA "R".
13. THE NAME & DESIGN COND. ARE SUBJECT TO CODE APPROVAL OF THE TUBE MATERIAL
14. INSPECTION POINTS:
    A TUBE SHEET AFTER DRILLING
    E COMPONENT PARTS BEFORE ASSEMBLY
    C AT HYDRO-TEST.

CUSTOMER: WESTINGHOUSE ELEC. CO.
PO NO. 546-SY-170939
UNITS REQUIRED: (1) ONE
ATLAS JOB NO. 2435

REV.		BY	DATE
7	REV. TEST PRESS. (SHELL SIDE)	JG	10-26-73
6	FINALIZED DWG	JG	5-16-73
5	REV. SUPPORT LOCATIONS	[illegible]	4-2-73
4	REV. PER CUST MKD PRINT	JG	3-21-73
3	REV. PER CUST MKD. PRINT	JG	2-21-73
2	REV T.S REF & UNIT O.A.	JG	11-27-72
1	PER MEETING OF 10-16-72	JG	10-21-72

ATLAS INDUSTRIAL MANUFACTURING CO.
81 SOMERSET PLACE
CLIFTON, N. J.

14-409

STEAM GENERATOR SIMULATOR

SCALE	MADE	DATE	CKD.	APPD	DRAWING NO.
		9-25-72			D-3150-7

Figure 6-14. FLECHT SEASET Natural Circulation Broken Loop Steam Generator Construction Details (sheet 1 of 2)

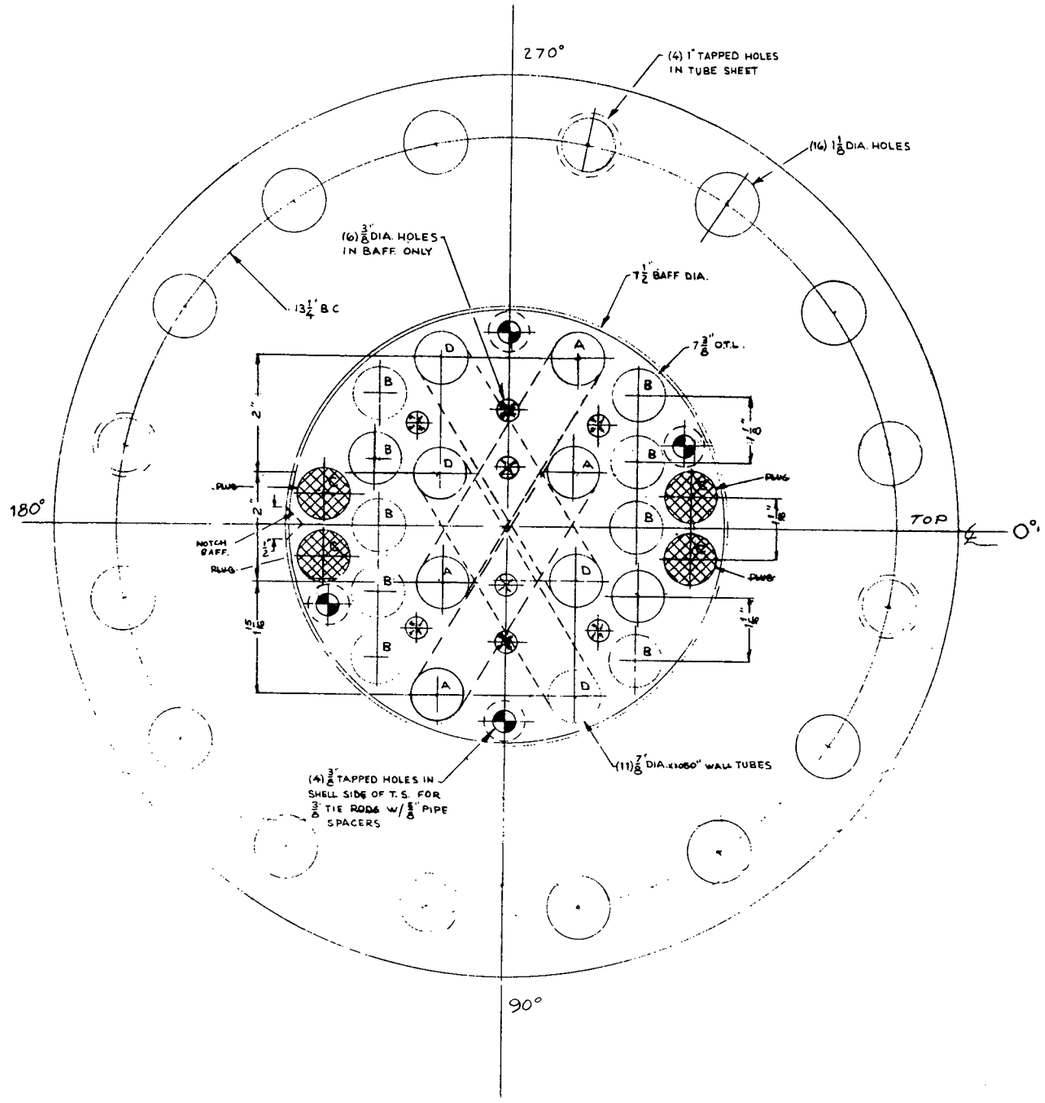

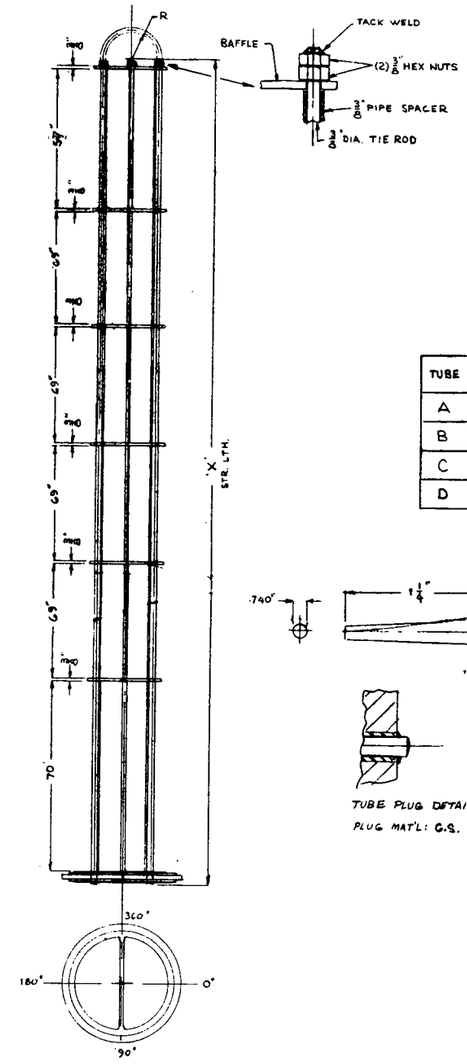

TUBE	R	X	DEV. LTH
A	2 3/16"	34'-1 1/2"	68'-9 7/8"
B	2 3/16"	34'-3 1/2"	69'-1 7/8"
C	3 3/16"	34'-3 1/2"	69'-5"
D	2 3/16"	34'-2 1/2"	68'-11 7/8"

TUBE PLUG DETAIL

PLUG MAT'L: C.S.

CUSTOMER: WESTINGHOUSE ELEC.
P.O. NO. 54G-SY-170939
ATLAS JOB 2434
REF DWG. D-3138

*NOTE: ALL TOL. PER T.E.M.A. 'R'

REV		BY	DATE
2	REV PER CUST MKD PRINT	JG	9-19-72
1	REV PER MEETING OF 10-16-72	JG	10-20-72

ATLAS INDUSTRIAL MANUFACTURING CO.
81 SOMERSET PLACE
CLIFTON, N. J.

TUBE BUNDLE DETAIL
*B-411

SCALE	MADE	DATE	CHK.	APPR.	DRAWING NO.
~	JG	9-14-72			D-T 3139-2

Figure 6-14. FLECHT SEASET Natural Circulation Broken Loop Steam Generator Construction Details (sheet 2 of 2)

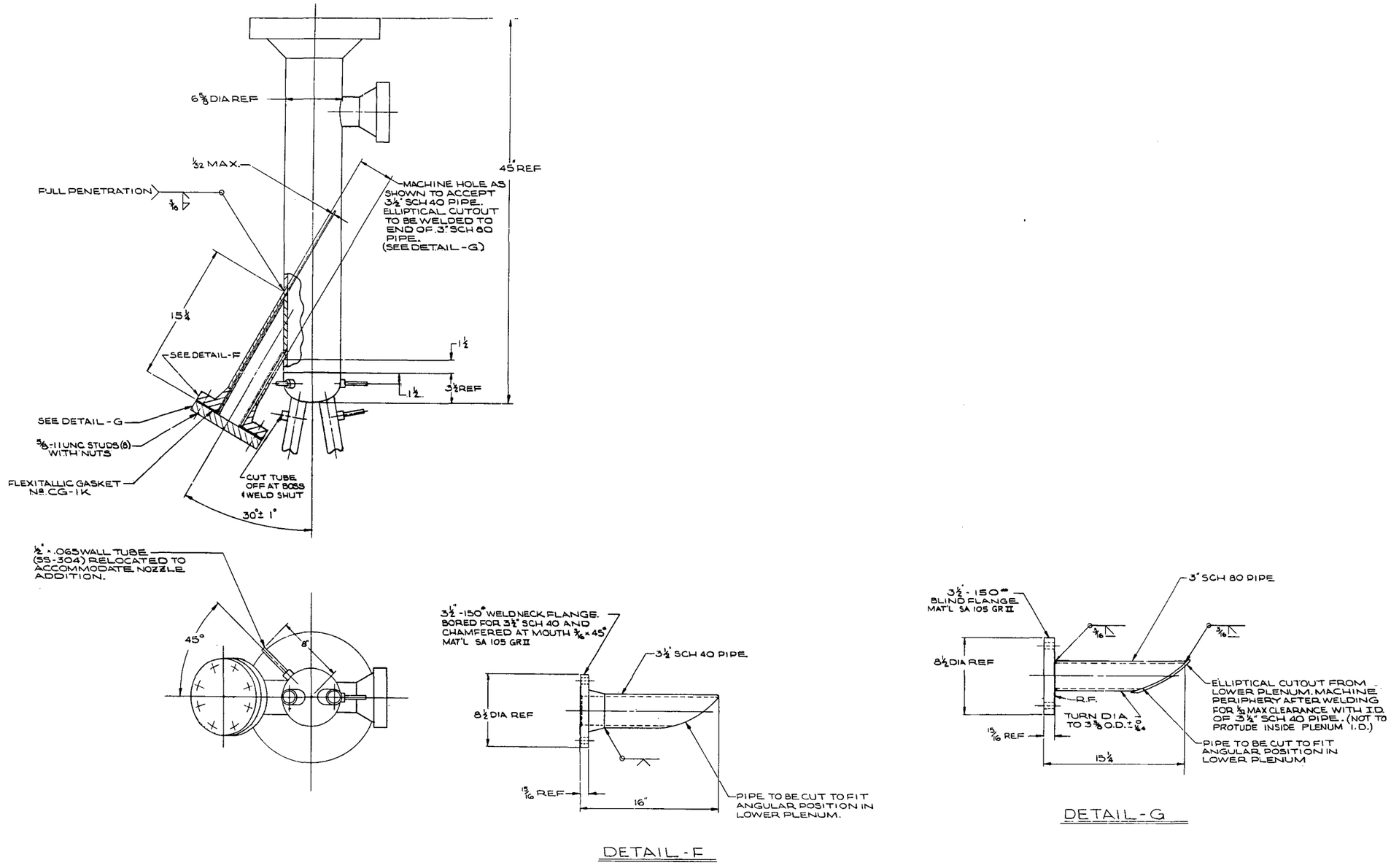

Figure 6-15. FLECHT SEASET Natural Circulation Broken Loop Steam Generator Modified Plenum

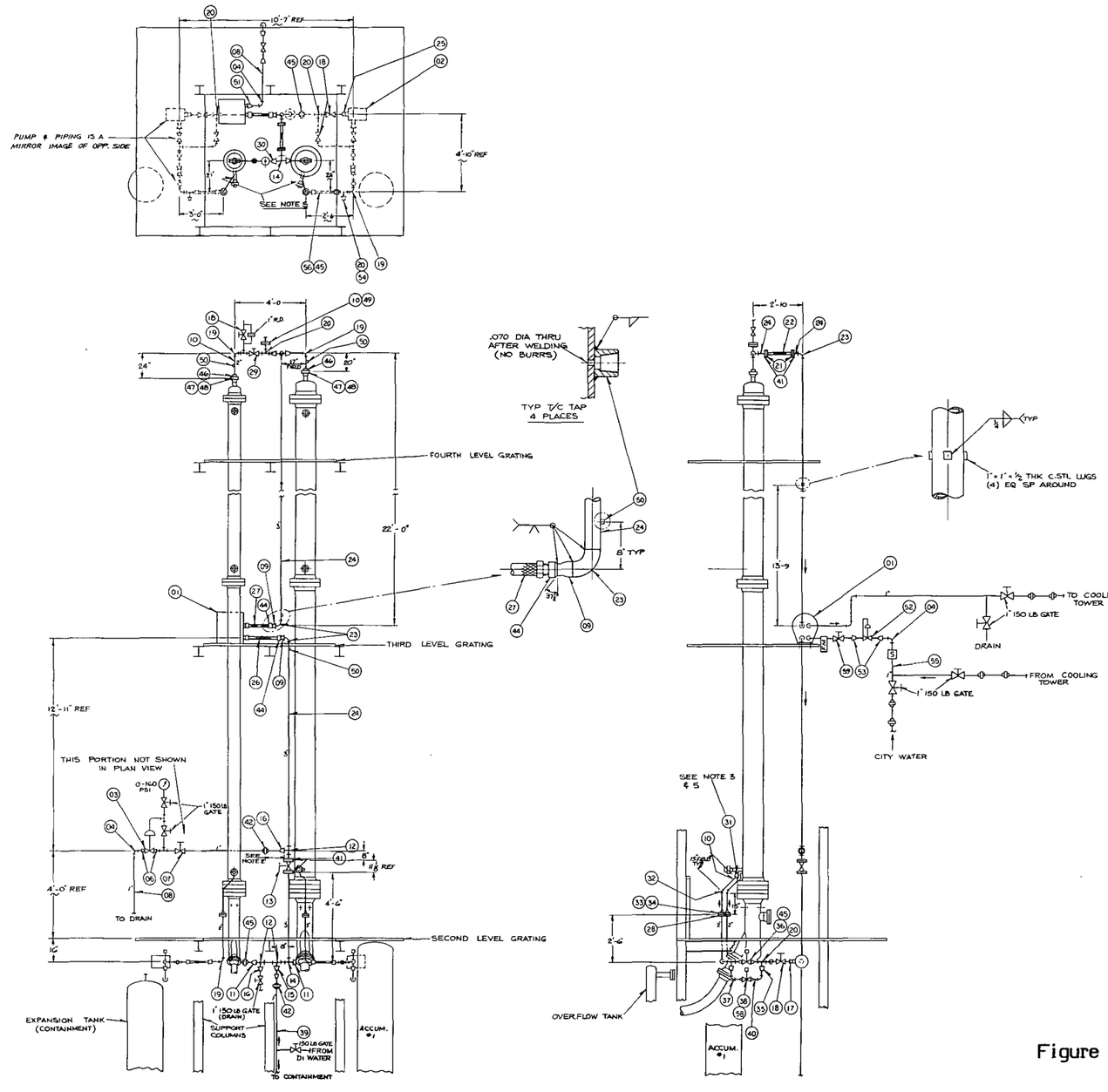

BILL OF MATERIAL								
ITEM	NOTE	PART NAME	DRAWING # OR OR ITEM	MATERIAL	REQ PER GROUP 01	02	03	04
01	A	HEAT EXCHANGER	24-1B L		1			
02	B	PUMP SERIES 300	MOD. C 984 E		2			
03	C	RELIEF VALVE W/ SARCO	25 BP		1			
04		90° ELL, 1" NPT 2000 LB		C. STL	4			
05		TEE-1"x1"x1" NPT 2000 LB			2			
06		REDUCER-1"x 1/2" NPT			2			
07		GATE VALVE, 1" NPT 300 LB			2			
08		PIPE, 1" S 80			AR			
09		REDUCER, 3"x2½" B.W. S80			2			
10		PIPE, 2" S 80			AR			
11		REDUCER, 3"x2" B.W. S 80			2			
12		TEE - 3"x3"x2" B.W. S 80			3			
13		GATE VALVE, 3" FLG. 300 LB			1			
14		TEE 3"x3"x3" B.W. S 80			2			
15		REDUCER, 2"x1½" B.W. S80			1			
16		REDUCER, 2"x1" B.W. S 80			2			
17		REDUCING UNION 2" FNPT x 1/2 MNPT 300 LB			2			
18		GATE VALVE, 2" NPT 125 LB			6			
19		90° ELL, 2" NPT 2000 LB			8			
20		TEE, 2"x2"x2" NPT 2000 LB			12			
21		FLG, 3" NPT 300 LB			2			
22	D	FLEX PIPE 3" x 18"	UC2-S32/SM CS		1			
23		90° ELL, 3" B.W. S 80			6			
24		PIPE, 3" S 40			AR			
25		UNION, 2" NPT x 2" MNPT 300 LB			2			
26	D	FLEX PIPE 2½" x 24"	UC3-CS-SMUF		1			
27	D	FLEX PIPE 2½" x 18"	UC3-CS-SMUF		1			
28		ORIFICE FLG 2" NPT 600 LB			2			
29		BALL VALVE, 2" NPT 300 LB			1			
30		REDUCER, 3"x2" B.W. S80			2			
31		45° L.R. ELL, 2" B.W. S80			2			
32		45° ELL - 2" NPT 2000 LB			2			
33		ORIFICE FLG. 2" W/N 600 LB			2			
34		ORIFICE PL			2			
35		REDUCER 2"x½" NPT			4			
36	E	2" BALL VALVE			2			
37		90° ELL, ½" NPT 2000 LB			4			
38	E	½" BALL VALVE			2			
39		PIPE 1½" S 80			AR			
40		PIPE ½" S 160			AR			
41		FLG. 3" 300 LB SLIP-ON			4			
42		UNION 1" NPT 300 LB			2			
43		UNION 1½" NPT 300 LB			1			
44		HALF COUPLING 2½" NPT 3000 LB			2			
45		UNION 2" NPT 300 LB			8			
46	F	2" GRAYLOC B.W. HUB	2 GR 20		2			
47	F	2" GRAYLOC CLAMP			2			
48	F	2" GRAYLOC SEAL RING #20			2			
49		2" RUPTURE DISC ASSY- 300 LB			1			
50		½" NPT 3000 LB HALF COUPLING			4			
51		REDUCER 2½" x 1" NPT			1			
52	G	VALVE ¾" REGULATOR	#223 S		1			
53		REDUCER 1" x ¾" NPT			2			
54		REDUCER 2" x ½" NPT			2			
55		PIPE 1" S 40			AR			
56	D	FLEX PIPE 2" x 18"	UC3-CS-SMUF		2			
57		1" GLOBE VALVE 300 LB			1			
58		UNION ½" NPT 300 LB			2			
59		1" GLOBE VALVE 150 LB			1			

A- GRAHAM MFG. CO. INC, BATAVIA, N.Y.
B- CRANE DYNA PUMPS, PGH PROCESS EQUIP. CO, PGH, PA.
C- ZENITH SUPPLY CO. INC, PGH, PA.
D- UNIVERSAL METAL HOSE CO, CHICAGO, ILL.
E- B & TT STYLE B WITH EJ-50 ACTUATOR
F- GRAY TOOL CO. HOUSTON, TEXAS
G- WATTS VALVE FR ZENITH SUPPLY CO, PGH, PA.

NOTES:
1- ALLOW 12" EXTRA LENGTH FOR FIELD FITTING.
2- WHERE POSSIBLE, PLACE UNIONS 2" FROM NEAREST FITTING. (TYP ITS. 42, 43, 45).
3- CUT & REMOVE EXISTING FITTINGS PRIOR TO WELDING ITEM 31 IN PLACE. TYP 2 PLACES.
4- STAMP WELDED PIPING 300 PSI - 650°F
5- POSITION S/G INLET (IT. 10 & 31) SO THAT NO INTERFERENCE OCCURS WITH VIEWING WINDOW & INSTRUMENTATION TAP.

Figure 6-16. FLECHT SEASET Natural Circulation Steam Generator Secondary Side Cooling System

The closed loop has two canned motor pumps to circulate water through 5 cm (2 in.) separate and 8 cm (3 in.) common lines. Flow control is by 1.3 and 5 cm (0.5 and 2 in.) pilot-operated valves. Flow enters the bottom of the secondary side through existing nozzles and exits through new nozzles added to the head of the steam generators, and goes through a heat exchanger before returning to the pumps. The flow is measured with orifice plate flowmeters.

The secondary side cooling system can also be operated as an evaporation cooler (boiling). The generated steam exiting through the top of the steam generator secondary side can either be condensed or dumped to atmosphere. When the system is operated with boiling at a constant water level, the steam is condensed in the secondary side heat exchanger and gravity-fed back to the steam generator shell side. During "boiloff" tests, when the secondary side is allowed to go dry, the steam is condensed in the same manner but the condensate is dumped to drain. The makeup water injected during recovery and refilling of the secondary side is preheated to 93°C (200°F) to minimize thermal shock of the steam generator tubes and shell.

6-12. Downcomer, Downcomer Extension, and Lower Plenum Crossover Leg

The downcomer and downcomer extension assembly is connected to the lower plenum crossover leg for the purpose of delivering reflood water to the test section lower plenum at a flow rate hydraulically scaled to that of a PWR plant. The layout of this piping system is shown in figure 6-2. The downcomer and downcomer extension assembly is a vertical run extending approximately 6 m (20 ft) above the bottom of rod bundle heated length (reference elevation). The downcomer, which consists of the lower 4.88 m (16.0 ft) of this section, was fabricated of carbon steel tubing having an inside diameter of approximately 14.29 cm (5.625 in.). These dimensions provide both volumetric and hydraulic scaling to a PWR. The downcomer is used to develop the hydraulic head needed to force reflood water into the test section.

The downcomer extension is the 0.91 m (3.0 ft) upper extension of the downcomer. Details of the downcomer and downcomer extension design are shown in figure 6-17, group 1. The downcomer extension was fabricated of 16.83 cm (6.625 in.) diameter tubing with 1.3 cm (0.5 in.) thick walls and six 15 cm (6 in.) pipe flanges. Since the OD of

the tubing was the same 15 cm (6 in.) nominal pipe, standard fittings could be used. This extension is shown having four nozzles, but only two were used during natural circulation series tests. These two nozzles are the 7.6 cm (3 in.) penetration, which is used to connect the downcomer to the simulated unbroken loop cold leg piping, and the 3.8 cm (1.5 in.) nozzle, which is connected to the broken loop cold leg. The other two nozzles were capped with blind flanges during these tests. In addition, a gate valve was installed at the bottom of the downcomer, as shown in figure 6-2, to isolate the downcomer and provide a flow path for the circulating pump in case forced circulation in the primary side is needed.

Attached to the bottom of the downcomer is the lower plenum crossover leg piping, as shown in figure 6-2. This section was fabricated of carbon steel tubing having an inside diameter of approximately 14.29 cm (5.625 in.). Also used in this line is a 90-degree long radius elbow, a specially designed spool piece to house the turbo-probe, and a flexible rubber hose. The spool piece consists of two weld neck flanges welded to a 7.6 cm (3 in.) tee section which houses the bidirectional turbo-probe. This turbo-probe was used to measure both forward and reverse flow into and out of the test section. Details of the spool piece construction are shown in figure 6-16, group 3. The rubber hose connects the crossover leg to the lower plenum and allows for downward thermal expansion of the test section. The horizontal run of the lower plenum crossover leg is 2.3 m (7.5 ft) long, including the turbo-probe. A 3.8 cm (1.5 inch) nozzle located in the elbow of the crossover leg was used to inject the coolant water from the accumulator for all reference reflood tests. This penetration is attached at a 90-degree angle to the crossover leg to dissipate the dynamic head of the injection flow.

6-13. Loop Piping

The loop piping consists of two flow paths representing the unbroken, or intact, and the broken loops of a PWR. As stated before, the system was originally designed to conduct reflood experiments. For this reason, the unbroken loop represents the three intact loops of a PWR during a hypothetical loss of coolant accident, and the broken loop represents the loop where the break occurs. However, for the natural circulation tests, the broken loop is not connected to the containment tank simulating a break, but is connected to the downcomer extension to complete the circuit and provide an

20616-105

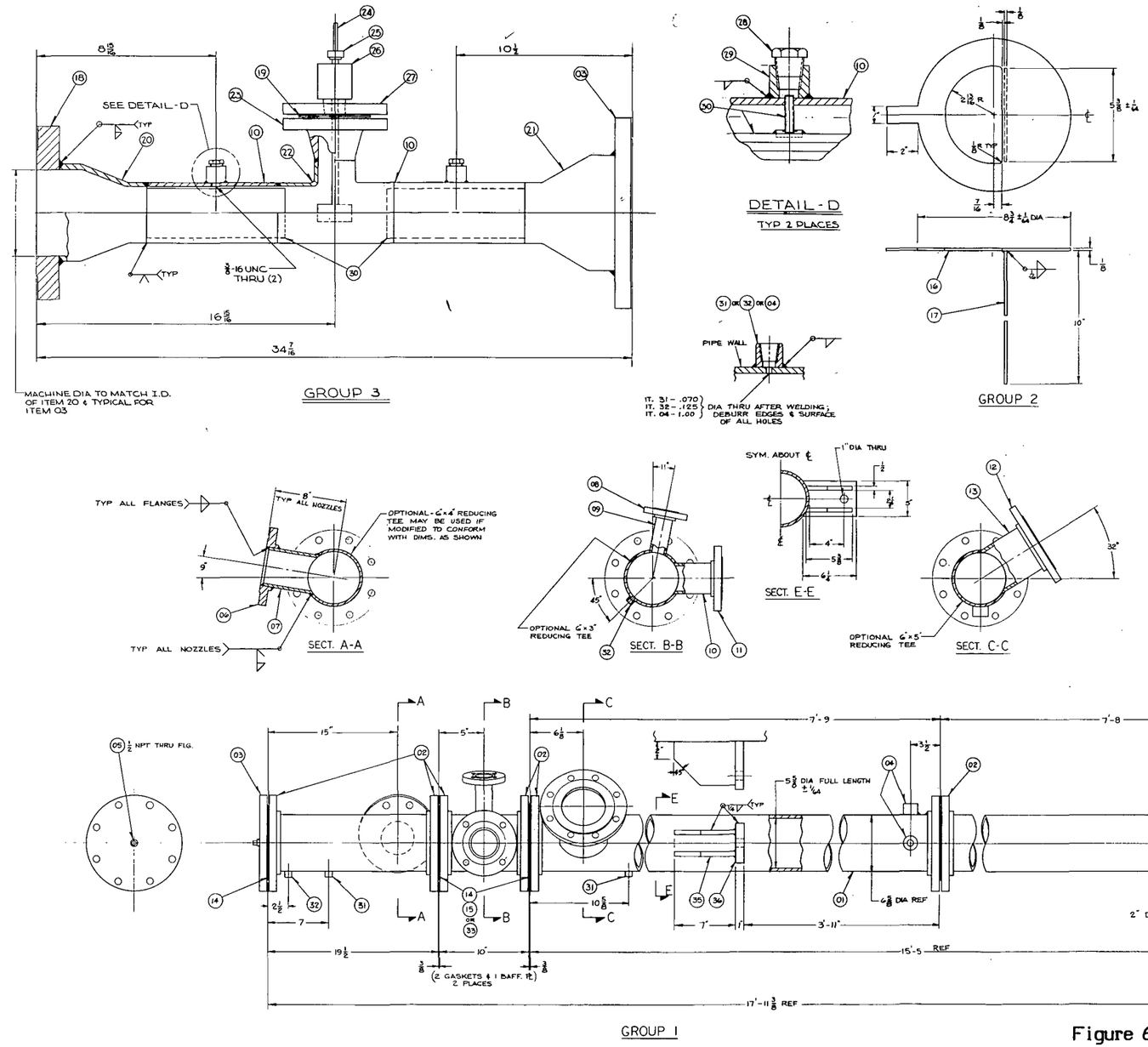

BILL OF MATERIAL								
ITEM	NOTE	PART NAME	DRAWING & GR OR IT.	MATERIAL	REQ PER GROUP 01	02	03	04
01		BODY, FR 6" S 120 PIPE		C. STL	AR			
02	A	FLG, SLIP-ON, 6" 150 LB			8			
03		FLG, BLIND, 6" 150 LB			1		1	
04		HALF COUPLING 1" 3000 LB			1			
05		SQ HD PIPE PLUG 1/2 NPT			1			
06		FLG, SLIP-ON, 4" 150 LB			1			
07		PIPE, 4" S 40			1			
08		FLG, SLIP-ON, 1 1/2" 150 LB			1			
09		PIPE, 1 1/2" S 40			1			
10		PIPE, 3" S 40			1		2	
11		FLG, SLIP-ON, 3" 150 LB			1			
12		FLG, SLIP-ON, 5" 150 LB			1			
13		PIPE, 5" S 40		C. STL	1			
14	B	GASKET 6" 150 LB	CG-1P		5			
15		BAFFLE ASSY	GR 2 THIS DWG		2			
16		HORIZ. PL		304 SST		1		
17		VERT. PL		304 SST		1		
18		FLG, BLIND, 5" 150 LB		C. STL			1	
19	B	GASKET 2" 150 LB	CG-1G				1	
20		REDUCER 5"x3" S 40		C. STL			1	
21		REDUCER 6"x5" S 40					1	
22		TEE 3"x2" S 40					1	
23		2" W/NECK FLG 150 LB		C. STL			1	
24	C	TURBOPROBE FTP-BC600-L/S-16(3)					1	
25		SWAGELOK MALE CONN. N-12LO-1-2-BT		TYPE 316 S.S.			1	
26	C	SPECIAL THD CPLG		TYPE 316 S.S.			1	
27		2" 150 LB FLG, BLIND		C. STL			1	
28		PIPE PLUG 1/2"					1	
29		HALF COUPLING 1/2" 3000 LB					1	
30	D	FLOW STRAIGHTENER 3" # 1100 L					2	
31		HALF COUP. 1/2" 3000 LB			2			
32		HALF COUP. 1/4" 3000 LB		C. STL	2			
33		BAFFLE		304 SST	2			
34		2" BONNEY THD-O-LET SCH 40		C. STL	1			
35		GUSSET		C. STL	4			
36		PAD		C. STL	2			

A - STUDS & NUTS TO BE SUPPLIED WITH FLANGES.
B - FLEXITALLIC GASKET CO. CAMDEN, N.J.
C - FLOW TECHNOLOGY INC. PHEONIX, ARIZ.
D - DANIEL INDUSTRIES INC. HOUSTON, TEXAS

NOTES:
1 - FLANGE HOLES TO STRADDLE ℄ AS SHOWN.

Figure 6-17. FLECHT SEASET Natural Circulation Downcomer, Downcomer Extension, and Turbo-Probe Spool

uninterrupted flow path from the upper plenum, through the steam generator, the loop pump seal, and the cold leg, to the downcomer extension. The layout of these loops is shown in figure 6-2.

All the loop piping components are fabricated with carbon steel pipes rated at 1.03 MPa (150 psi) and 316°C (600°F).

In the unbroken loop, 15 cm (6 in.) sch 40 piping connects the upper plenum to the steam generator inlet plenum. The hot leg has two spools, one of which could accommodate advanced two-phase flow instrumentation. The other spool could be replaced with a glass pipe section to visually determine flow regimes during two-phase flow and reflux condensation cooling modes. However, this glass pipe section can only be operated at pressures below 0.48 MPa (75 psia) and 149°C (300°F).

The pump loop seal piping downhill and uphill legs were fabricated with 7.6 cm (3 in.) sch 40 pipe. The horizontal section is a 5 cm (2 in.) sch 80 pipe spool with a flanged connection for installing a bidirectional turbine meter spool. The uphill pipe section has flanges for a orifice plate, which could be used to adjust the unbroken loop flow resistance.

The unbroken loop cold leg consists of 7.6 cm (3 in.) sch 80 piping. It has two penetrations for cold leg injection, and short pipe spools for installing flow check valves if necessary.

The hot leg and cold leg were purposely sloped toward the upper plenum and downcomer extension to ensure that the liquid film flowing countercurrently during reflux condensation tests would flow back to these components. The hot leg has a total slope of 11 cm (4.5 in.) and the cold leg is sloped 19 cm (7.5 in.) over its entire length. Dimensions and fabrication details drawings are included in appendix E. Special consideration was given in aligning the bottom of the pipes and gaskets at the flange connections in order to minimize the damming effect of various pipe spools by trapping water, which could prevent accurate measurements of the condensed liquid film height and flowrates during reflux condensation tests.

The broken loop piping has a configuration similar to that of the unbroken loop. The broken loop hot leg is made of 9 cm (3.5 in.) sch 40 pipe. Its flow area is about one-third

that of the unbroken loop to maintain the proper scaling. The loop seal downhill and uphill piping consists of 6.3 cm (2.5 in.) extra strong (XXSTR) schedule pipe. The horizontal leg has also a reduced diameter pipe spool with flanged connections for installing a bidirectional turbine meter. This spool is made of 3.18 cm (1.25 in.) sch 60 pipe. The uphill leg has flanges for installing a thin plate orifice. The cold leg was fabricated with 3.8 cm (1.5 in.) sch 40 pipe. This section of piping does not have penetrations for cold leg injection like the unbroken loop cold leg. The broken loop hot and cold legs were also sloped downward toward the upper plenum. The overall slopes are the same as those of the unbroken loop. In addition, the hot and cold leg flanged connections were also aligned as in the unbroken loop.

6-14. Pressurizer

Accumulator no. 1 is used as a pressurizer during the natural circulation test. It is connected to the crossover leg elbow at the bottom of the downcomer, as shown in figure 6-2. The pressurizer is used to pressurize the loop primary side by means of a feed-and-bleed gas overpressure control system. It also provides preheated water during filling, and serves as an expansion tank and reservoir for the primary side mass depletion during two-phase flow and reflux condensation cooling mode tests. Accumulator no. 1 is a tank with a 61 cm (24 in.) outside diameter and 5.72 cm (2.25 in.) inside diameter; it is about 6.1 m (20 ft) long. It has a capacity of about 1.5 m^3 (400 gal). The 2.5 cm (1 in.) sch 40 connecting line (injection) to the crossover leg has a bidirectional turbine meter to monitor flows in and out of the pressurizer.

6-15. Cold Leg and UHI Coolant Injection System

The system provides preconditioned water during cold leg and UHI injection effects tests. The injection locations are shown in figures 6-2 and 6-3. The coolant is supplied by a 1.14 m^3 (300 gal) tank via a 2.5 cm (1 in.) sch 40 line and a 0.008 to 0.08 m^3/min (2 to 20 gal/min) turbine meter. Nitrogen overpressure in the accumulator provides the necessary driving head to attain the required injection rates.

6-16. Boiler

The facility steam supply is a 1.23 mw (125 bhp) steam boiler. The unit has a thermal output rating of 1,225,500 w (4,184,000 Btu/hr) and an equivalent steam rating of 1956

kg/hr (4313 lb/hr) at 100°C (212°F). The boiler is of the package firetube design equipped with a combination gas/oil burner, modulating fire capabilities, and automatic controls. Design and construction of the boiler is in accordance with the ASME Code, Section 1. Design pressure is 1.14 MPa (150 psig). The unit was operated at approximately 0.79 MPa (100 psig) for all tests. At this operating condition, outlet steam quality is rated as better than 99.5 percent. The steam supply was used during shakedown hydraulic tests to determine flow resistances around the primary side piping, and for purging the primary side of noncondensible gases (air, helium) during filling operations. The steam supply line layout drawings are included in appendix C.

6-17. GENERAL INSTRUMENTATION DESCRIPTION

The data required on this task consist of temperature, power, flow, level, differential pressures, and static pressure. The temperature data were measured by type K (Chromel-Alumel) thermocouples using 66°C (150°F) reference junctions. The thermocouple locations are divided into two groups: test section bundle and loop. Bundle thermocouples consist of heater rod, thimble wall, steam probe, and fluid thermocouples. The heater rod thermocouples were monitored by the Computer Data Acquisition System (CDAS) for surface temperature and overtemperature. The loop thermocouples measure fluid, vessel wall, piping wall, insulation, steam generator primary and secondary side, and tube wall temperatures.

Power input to the bundle heater rods was measured by Hall-effect watt transducers. Power input to the bundle heater rods was measured by dual watts/rms, volts/rms, and amps/rms transducers with an accuracy of ± 1 percent full scale for volts and amps, and ± 2 percent for power. These transducer systems include two sets of stepdown potential and current transformers. The scaling factor of the transformers were accounted for when the raw data (millivolts) were converted to engineering units.

The system pressure measurements were both static and differential. The pressure transducers were balanced bridge strain gage devices and capacitance diaphragm devices. The differential pressure readings measured level in the vessels and the bundle and pressure drops across selected horizontal pipes. Standard thermocouple calibration table entries and the corresponding coefficients were used to compute the temperature

values. All other channel calibration files were a straight-line interpolation of calibration data. The slope, intercept, and zero for the least-squares fit of a straight line to the equipment calibration data were computed for each channel and entered into its calibration file. The software used this straight-line formula to convert millivolts to engineering units. Figure 6-18 presents a schematic diagram of the computer hardware interface.

Flows were measured by turbine meters, rotameters, bidirectional turbine meters, and a turbo-probe. The turbine meter was the primary flow measurement because of its high accuracy and range. It was a standard turbine meter with a preamplifier and flowrate monitor to convert the pulses from the turbine blades to flow rate in gallons per minute. The rotameters measured condensed liquid film flowrates during the reflux condensation tests. The rotameter float displacement was converted to an analog signal so that the flow measured by the rotameter could be recorded by the data acquisition system. The bidirectional turbo-probe was used to measure the downcomer flow into or out of the bundle. The turbo-probe was installed in the downcomer crossover pipe to measure the velocity of the water in that pipe. The turbo-probe flowrate monitor analog signal was proportional to the speed and direction of flow in the downcomer crossover pipe. Calibration of the turbo-probe by the manufacturer provided data conversion from millivolts to gallons per minute for the turbo-probe analog signal. Bidirectional turbine meters monitored flows in the unbroken and broken loop pump loop seals, and measured reverse flows if they occurred. A bidirectional turbine meter, also installed in the line connecting the pressurizer to the crossover leg, was able to measure flow in both directions during primary side mass depletion or mass increase modes.

6-18. DATA ACQUISITION SYSTEM

Primarily, three types of recording systems monitor the instrumentation on the FLECHT SEASET facility. The data acquisition system consists of a SEL 32/77 computer, Consolidated Control Corporation (CCC) data logger, and multiple stripchart pen recorders. Figure 6-19, the facility instrumentation schematic diagrams, can be used in conjunction with table 6-3 to locate and identify all the facility instrumentation monitored by the data acquisition system.

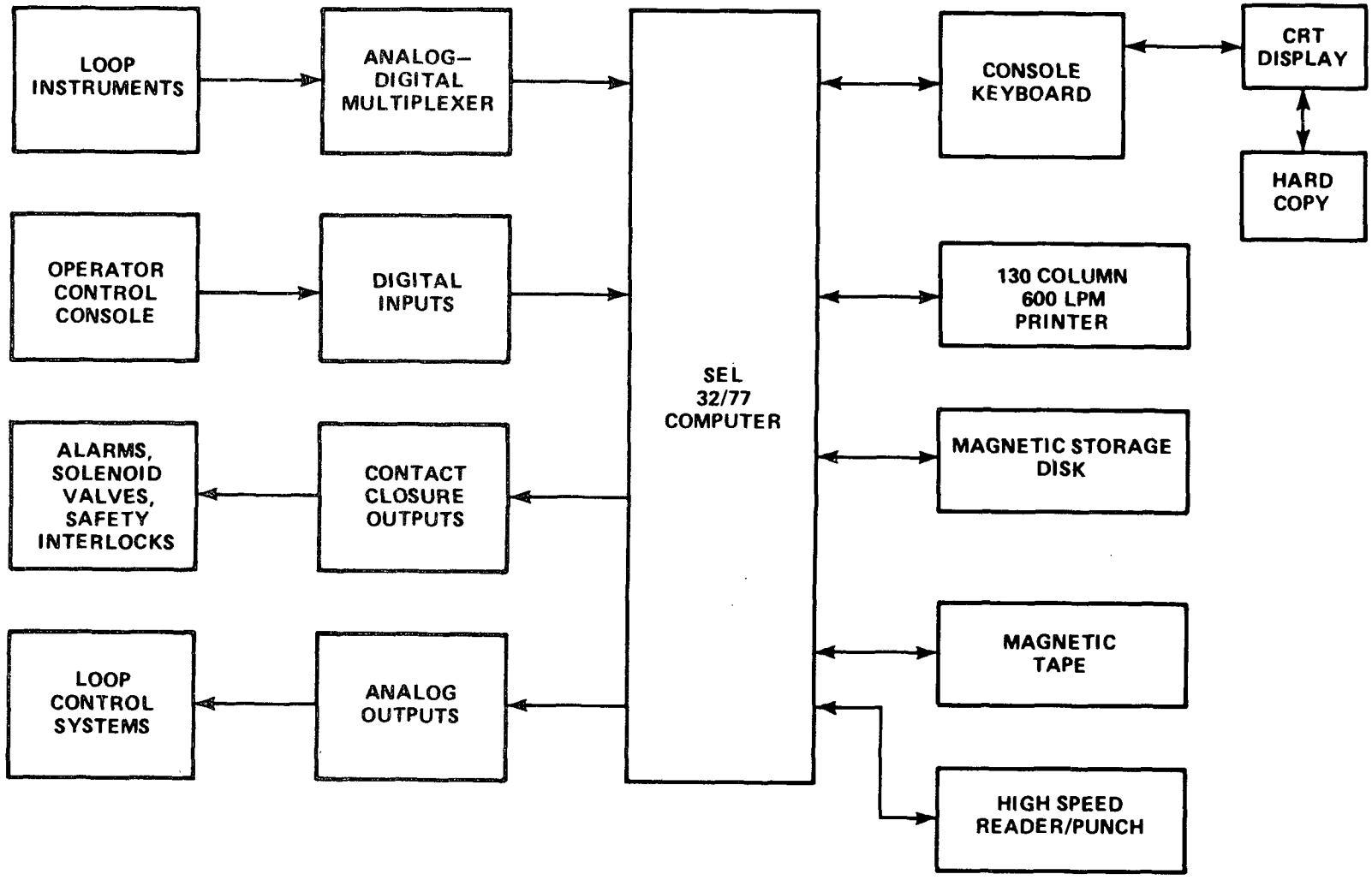

Figure 6-18. FLECHT SEASET Computer Hardware Interface

20616-39

6-19. Computer Data Acquisition System (CDAS)

The CDAS is the primary data collecting system used on the FLECHT facility and consists of a SEL 32/77 computer and associated equipment. The system can record 576 channels of analog input data representing bundle and system temperatures, bundle power, flows, and absolute and differential pressures. The computer is capable of storing data scans for each of the 576 analog input channels.

The computer software has the following features:

-- A calibration file to convert raw data into engineering units

-- A preliminary data reduction program which transfers the raw data stored on a disk to a magnetic tape in a format compatible for entry into a Control Data Corporation 7600 computer

-- Program F-LOOK, which reduces raw data into engineering units; program FVALID, which prints out key data used in validating FLECHT SEASET runs; program PLOT, which plots up to four data channels on a single graph. All three programs are utilized to evaluate test runs.

In addition to its role as data acquisition system, the computer also plays a key role in the performance of an experimental run. Important control functions include control of injections, flow, and power as well as termination of bundle power in the event of an overtemperature and/or overpressure condition. Table 6-4 lists the instrumentation recorded on the CDAS.

6-20. Data Logger

The CCC data logger is a microprocessor-based data logger which can record on either 21-column paper or digital magnetic tape. The paper readout feature is used to monitor loop heatup, and the digital magnetic tape recorder stores data during a test. Data are recorded in engineering units from either standard conversion tables or thermocouples and RTDs, or from preprogrammed calibration files for pressure and flow. Input signals

LEGEND

ΔP = DIFFERENTIAL PRESSURE TRANSDUCER
PT = PRESSURE TRANSMITTER
F T/C = FLUID THERMOCOUPLE
W T/C = WALL THERMOCOUPLE
INS T/C = INSULATION THERMOCOUPLE
SP T/C = STEAM PROBE THERMOCOUPLE
◇ = DESIGNATES FOR BOTH STEAM GENERATORS
CH-XXX = COMPUTER CHANNEL NO. (SUFFIX T OR B DESIGNATES TOP OR BOT. OF PIPE, S = SPARE)
ST-XX = STATION NO. (PENETRATION LOCATION)
⊕ = CONNECT TO THE DATA LOGGER

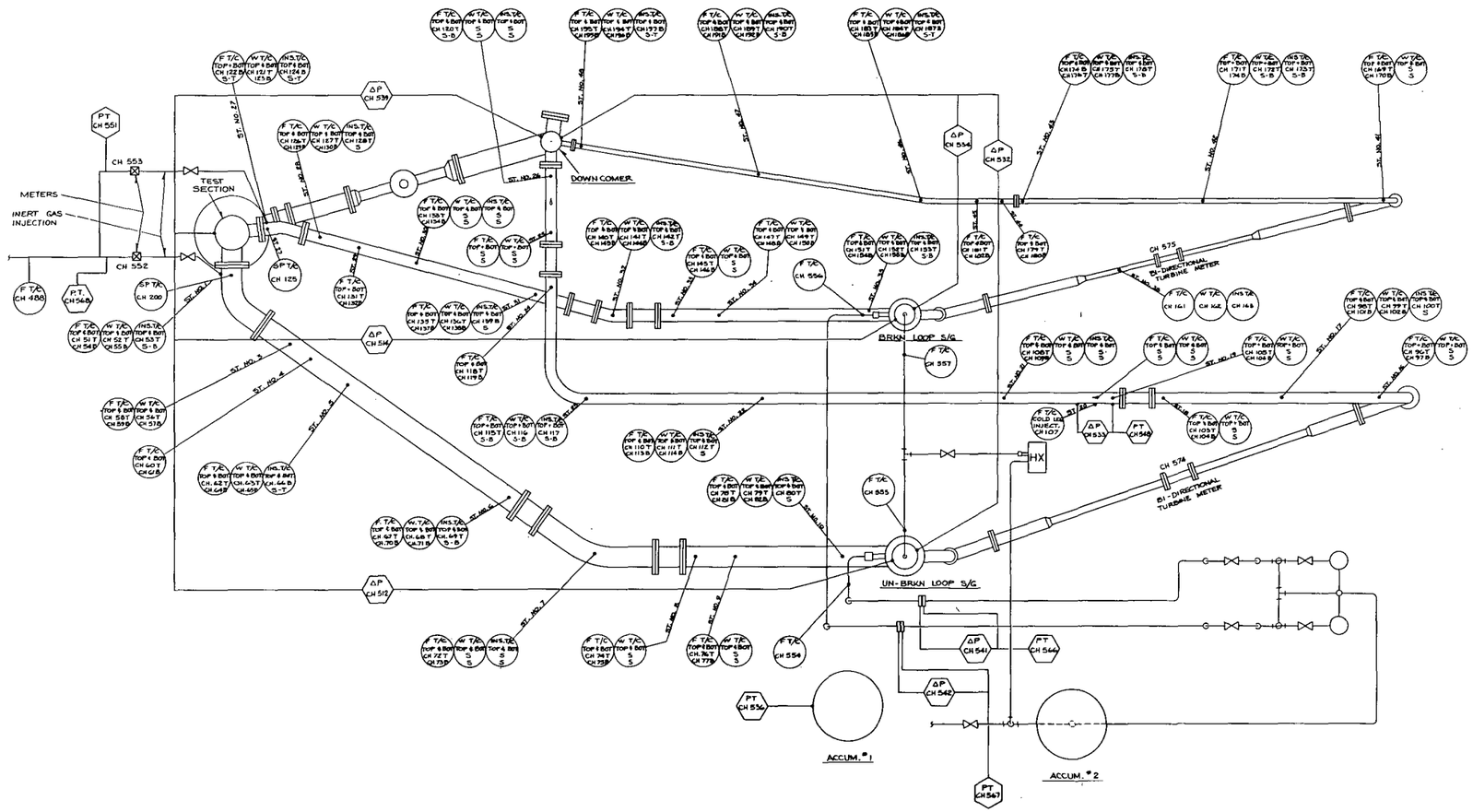

Figure 6-19. FLECHT SEASET Natural Circulation Facility Instrumentation Schematic Diagram (sheet 1 of 2)

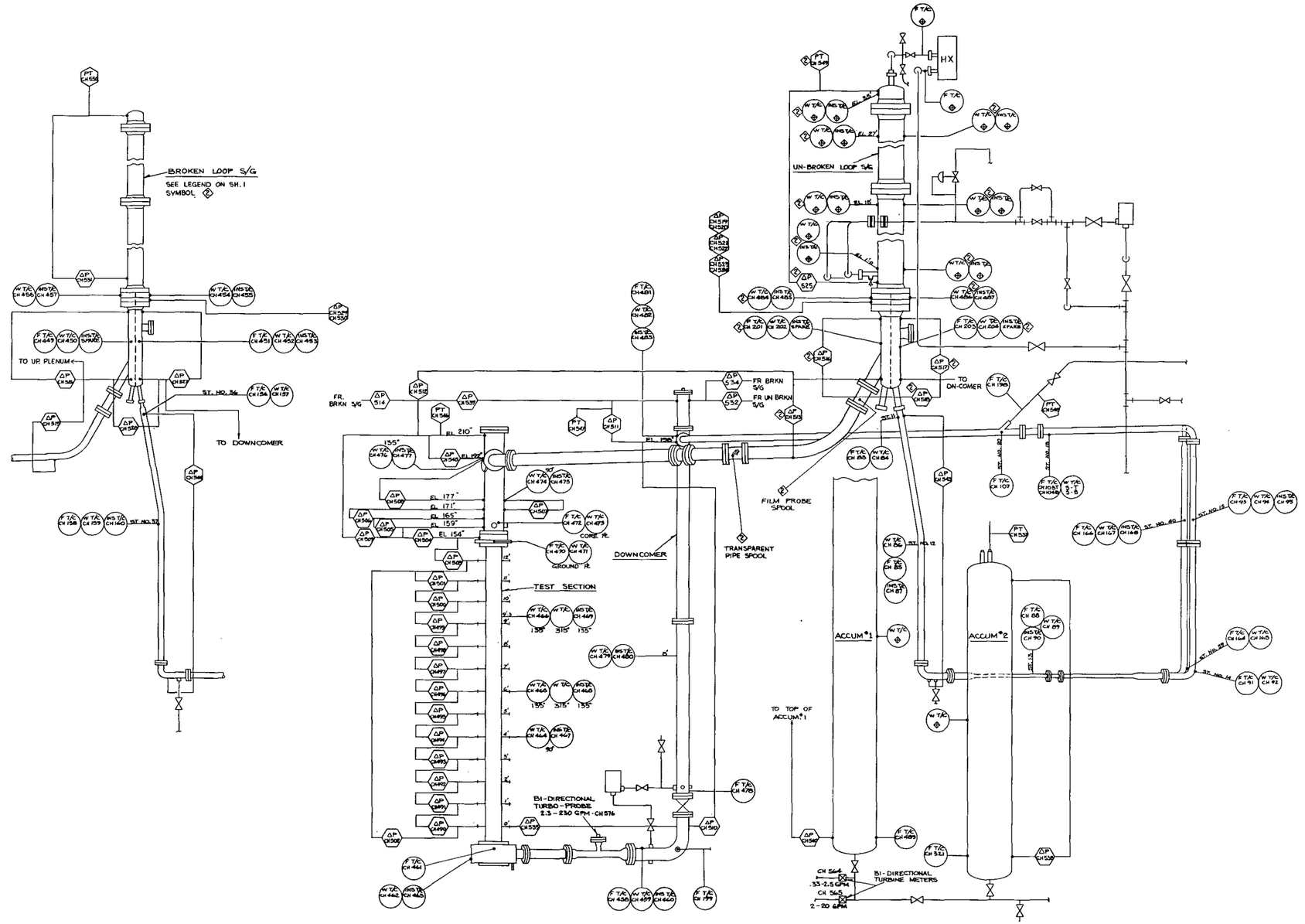

Figure 6-19. FLECHT SEASET Natural Circulation Facility Instrumentation Schematic Diagram (sheet 2 of 2)

TABLE 6-3

FLECHT SEASET NATURAL CIRCULATION AND

REFLUX CONDENSATION TESTS OVERALL INSTRUMENTATION LIST

Component/Instrumentation	Number of Channels Used		
	CDAS	CCC	Stripchart Recorder
TEST SECTION			
Rod Bundle:			
Heater rod thermocouples	33	--	4
Bare thermocouples	9	--	--
Heated thermocouples	8	--	--
Thimble thermocouples	--	20	--
Ground plate fluid thermocouples	1	--	--
Ground plate wall thermocouples	1	--	--
Power:			
Primary	3	--	3
Redundant	3	--	3
Housing:			
Wall thermocouples	3	3	3
Insulation thermocouples	3	3	--
Differential pressure cells	15	15	1
Lower plenum:			
Fluid thermocouple	1	--	1
Wall thermocouple	1	1	--
Insulation thermocouple	1	--	--
Upper plenum:			
Pressure	1	1	1
Differential pressure cells	7	7	1
Wall temperature	2	2	--
Core plate fluid temperature	1	--	1
Core plate wall temperature	1	--	--
Insulation temperature	1	--	--

TABLE 6-3 (cont)

FLECHT SEASET NATURAL CIRCULATION AND

REFLUX CONDENSATION TESTS OVERALL INSTRUMENTATION LIST

Component/Instrumentation	Number of Channels Used		
	CDAS	CCC	Stripchart Recorder
UNBROKEN LOOP			
Hot leg:			
Fluid thermocouple	19	--	1
Wall thermocouple	10	10	--
Insulation thermocouple	4	--	--
Flow (rotameter)	2	--	1
Differential pressure	1	1	--
Pump loop seal:			
Fluid thermocouple	5	--	--
Wall thermocouple	5	5	--
Insulation thermocouple	3	--	--
Flow	1	1	1
Differential pressure cell	1	1	--
Cold Leg:			
Fluid thermocouple	18	--	--
Wall thermocouple	7	7	--
Insulation thermocouple	4	--	--
Flow (rotameter)	1	--	1
BROKEN LOOP			
Hot Leg:			
Fluid thermocouples	17	--	1
Wall thermocouples	10	10	--
Insulation thermocouples	4	--	--
Flow (rotameter)	1	--	1
Differential pressure	1	1	--
Pump loop seal:			
Fluid thermocouples	5	--	--
Wall thermocouples	5	5	--
Insulation thermocouples	3	--	--
Flow	1	1	1
Differential pressure	1	1	--

TABLE 6-3 (cont)

FLECHT-SEASET NATURAL CIRCULATION AND

REFLUX CONDENSATION TESTS OVERALL INSTRUMENTATION LIST

Component/Instrumentation	Number of Channels Used		
	CDAS	CCC	Stripchart Recorder
Cold Leg:			
Fluid thermocouples	15	--	--
Wall thermocouples	9	9	--
Insulation thermocouples	5	--	--
Flow (rotameter)	1	--	1
UNBROKEN LOOP STEAM GENERATORS			
Inlet side:			
Primary fluid thermocouples (steam probes)	23	--	1
Tube wall thermocouples	25	--	--
Secondary side fluid thermocouples	25	--	--
Shell wall thermocouples	2	4	--
Insulation thermocouples	1	4	--
Primary differential pressures[a]	8	8	--
Outlet side:			
Primary fluid thermocouples (steam probes)	21	--	1
Tube wall thermocouples	15	--	--
Secondary side fluid thermocouples	9	--	--
Shell wall thermocouples	2	4	--
Insulation thermocouples	1	4	--
Primary differential pressures	1	1	--
Secondary side cooling system:			
Fluid thermocouples	2	--	2
Static pressures	2	2	1
Differential pressures (overall)	1	1	1
Differential pressure (orifice plate)	1	1	1

a. Including inlet-outlet primary side ΔP

TABLE 6-3 (cont)

FLECHT SEASET NATURAL CIRCULATION AND

REFLUX CONDENSATION TESTS OVERALL INSTRUMENTATION LIST

Component/Instrumentation	Number of Channels Used		
	CDAS	CCC	Stripchart Recorder
BROKEN LOOP STEAM GENERATOR			
Inlet side:			
Primary fluid thermocouples (steam probes)	22	--	1
Tube wall thermocouples	27	--	--
Secondary side fluid thermocouples	27	--	--
Shell wall thermocouples	2	4	--
Insulation thermocouples	1	4	--
Primary differential pressures[a]	3	3	--
Outlet side:			
Primary fluid thermocouples (steam probes)	20	--	1
Tube wall thermocouples	19	--	--
Secondary side fluid thermocouples	14	--	--
Shell wall thermocouples	2	4	--
Insulation thermocouples	1	4	--
Primary differential pressures	1	1	--
Secondary side cooling system:			
Fluid thermocouples	2	--	2
Static pressures	2	2	1
Differential pressure (overall)	1	1	1
Differential pressure (orifice plate)	1	1	1
Downcomer:			
Pressure	2	2	1
Differential pressures	2	2	2
Fluid temperature	2	--	1
Wall temperature	2	--	--
Insulation Temperature	2	--	--
Crossover leg:			
Flow (bidirectional turbo-probe)	1	1	1
Fluid temperature	1	--	--
Wall temperature	1	--	--
Insulation temperature	1	--	--

a. Including inlet-outlet primary side ΔP

TABLE 6-3 (cont)

FLECHT SEASET NATURAL CIRCULATION AND

REFLUX CONDENSATION TESTS OVERALL INSTRUMENTATION LIST

Component/Instrumentation	Number of Channels Used		
	CDAS	CCC	Stripchart Recorder
MISCELLANEOUS			
Accumulator no. 1 (pressurizer)			
Pressure	1	1	1
Differential pressure level	1	1	1
Fluid temperature	2	--	--
Wall temperature	--	1	--
Accumulator no. 2			
Pressure and cold leg injection	2	1	1
Differential pressure (level)	1	1	1
Fluid temperature[b]	2	--	1
Wall temperature	--	1	1
Flow (injection line)	1	--	1
Noncondensible gas injection:			
Pressure	1	1	1
Fluid temperature	2	2	2
Flows	2	2	2
Loop differential pressure cells	9	9	--
Spares	1	--	--

b. Including injection line

TABLE 6-4

FLECHT SEASET NATURAL CIRCULATION AND

REFLUX CONDENSATION TESTS

CDAS INSTRUMENTATION LIST

**********GLOSSARY**********

ACCUM= ACCUMULATOR

BOT= BOTTOM

BRK= BROKEN

COND= CONDENSED

DWNCOMER= DOWNCOMER

D/P= DIFFERENTIAL PRESSURE

EXT= EXTENSION

F= FLUID

FL= FLUID

FLAN= FLANGE

FT= FEET(ELEVATION)

GRD= GROUND

IN= INCHES(ELEVATION)

INJ= INJECTION

INL= INLET

INS= INSULATION

INSUL= INSULATION

LIQ= LIQUID

LN= LINE

LP= LOOP

MTR= METER

NOZ= NOZZLE

ORIF= ORIFICE

OUTL= OUTLET

PLNM= PLENUM

PR= PROBE

PRI= PRIMARY

PRS= PRESSURE

PT= PRESSURE TRANSMITTER

ROTA= ROTAMETER

SEC= SECONDARY

SP= STEAM PROBE

ST= STEAM

ST GEN= STEAM GENERATOR

STA= STATION

T= TUBE

TURB= TURBINE

T/C= THERMOCOUPLE

UNBRK= UNBROKEN

UP= UPPER PLENEM

WL= WALL

CHANNEL	1 HEATER ROD T/C	8H1-0	RANGE:0-1000 DEG F
CHANNEL	2 HEATER ROD T/C	8G2-0	RANGE:0-1000 DEG F
CHANNEL	3 HEATER ROD T/C	5F2-0	RANGE:0-1000 DEG F
CHANNEL	4 HEATER ROD T/C	7J3-3	RANGE:0-1000 DEG F
CHANNEL	5 HEATER ROD T/C	7E3-3	RANGE:0-1000 DEG F
CHANNEL	6 HEATER ROD T/C	7K4-0	RANGE:0-1000 DEG F
CHANNEL	7 HEATER ROD T/C	7G4-0	RANGE:0-1000 DEG F

TABLE 6-4 (cont)

FLECHT SEASET NATURAL CIRCULATION AND

REFLUX CONDENSATION TESTS

CDAS INSTRUMENTATION LIST

CHANNEL	8 HEATER ROD	T/C	8H5-0	RANGE:0-1000 DEG F
CHANNEL	9 HEATER ROD	T/C	6F5-0	RANGE:0-1000 DEG F
CHANNEL	10 HEATER ROD	T/C	8G5-7	RANGE:0-1000 DEG F
CHANNEL	11 HEATER ROD	T/C	5F5-7	RANGE:0-1000 DEG F
CHANNEL	12 HEATER ROD	T/C	7J6-0	RANGE:0-1000 DEG F
CHANNEL	13 HEATER ROD	T/C	1CH6-0	RANGE:0-1000 DEG F
CHANNEL	14 HEATER ROD	T/C	6D6-0	RANGE:0-1000 DEG F
CHANNEL	15 HEATER ROD	T/C	8B6-0	RANGE:0-1000 DEG F
CHANNEL	16 HEATER ROD	T/C	8G6-6	RANGE:0-1000 DEG F
CHANNEL	17 HEATER ROD	T/C	5F6-6	RANGE:0-1000 DEG F
CHANNEL	18 HEATER ROD	T/C	7K7-0	RANGE:0-1000 DEG F
CHANNEL	19 HEATER ROD	T/C	7G7-0	RANGE:0-1000 DEG F
CHANNEL	20 HEATER ROD	T/C	9L7-0	RANGE:0-1000 DEG F
CHANNEL	21 HEATER ROD	T/C	8A7-0	RANGE:0-1000 DEG F
CHANNEL	22 HEATER ROD	T/C	8H7-6	RANGE:0-1000 DEG F
CHANNEL	23 HEATER ROD	T/C	5L7-6	RANGE:0-1000 DEG F
CHANNEL	24 HEATER ROD	T/C	8G8-0	RANGE:0-1000 DEG F
CHANNEL	25 HEATER ROD	T/C	5F8-0	RANGE:0-1000 DEG F
CHANNEL	26 HEATER ROD	T/C	7J9-3	RANGE:0-1000 DEG F
CHANNEL	27 HEATER ROD	T/C	7E9-3	RANGE:0-1000 DEG F
CHANNEL	28 HEATER ROD	T/C	7K10-0	RANGE:0-1000 DEG F
CHANNEL	29 HEATER ROD	T/C	1CG1C-0	RANGE:0-1000 DEG F
CHANNEL	30 HEATER ROD	T/C	8G11-0	RANGE:0-1000 DEG F
CHANNEL	31 HEATER ROD	T/C	5F11-0	RANGE:0-1000 DEG F
CHANNEL	32 HEATER ROD	T/C	7J11-6	RANGE:0-1000 DEG F
CHANNEL	33 HEATER ROD	T/C	7E11-6	RANGE:0-1000 DEG F
CHANNEL	34 BARE	T/C	7I5-0	RANGE:0-500 DEG F
CHANNEL	35 HEATED	T/C	7F5-0	RANGE:0-500 DEG F

TABLE 6-4 (cont)

FLECHT SEASET NATURAL CIRCULATION AND

REFLUX CONDENSATION TESTS

CDAS INSTRUMENTATION LIST

CHANNEL	36	BARE	T/C	7I6-0			RANGE:0-500 DEG F
CHANNEL	37	HEATED	T/C	1CI6-0			RANGE:0-500 DEG F
CHANNEL	38	BARE	T/C	7I7-0			RANGE:0-500 DEG F
CHANNEL	39	HEATED	T/C	4F7-0			RANGE:0-500 DEG F
CHANNEL	40	BARE	T/C	1CF7-6			RANGE:0-500 DEG F
CHANNEL	41	BARE	T/C	7I8-0			RANGE:0-500 DEG F
CHANNEL	42	HEATED	T/C	4F8-0			RANGE:0-500 DEG F
CHANNEL	43	BARE	T/C	7I9-3			RANGE:0-500 DEG F
CHANNEL	44	HEATED	T/C	7F9-3			RANGE:0-500 DEG F
CHANNEL	45	BARE	T/C	1CF10-0			RANGE:0-500 DEG F
CHANNEL	46	HEATED	T/C	4F10-0			RANGE:0-500 DEG F
CHANNEL	47	BARE	T/C	1CF11-0			RANGE:0-500 DEG F
CHANNEL	48	HEATED	T/C	1CL7-0			RANGE:0-500 DEG F
CHANNEL	49	HEATED	T/C	7F11-6			RANGE:0-500 DEG F
CHANNEL	50	BARE	T/C	7I11-6			RANGE:0-500 DEG F
CHANNEL	51	TOP FLUID	T/C	STA-01	UNBRK	LOOP HOT LEG	RANGE:0-500
CHANNEL	52	TOP WALL	T/C	STA-01	UNBRK	LOOP HOT LEG	RANGE:0-500
CHANNEL	53	TOP INSUL	T/C	STA-01	UNBRK	LOOP HOT LEG	RANGE:0-500
CHANNEL	54	BOT FLUID	T/C	STA-01	UNBRK	LOOP HOT LEG	RANGE:0-500
CHANNEL	55	BOT WALL	T/C	STA-01	UNBRK	LOOP HOT LEG	RANGE:0-500
CHANNEL	56	TOP WALL	T/C	STA-03	UNBRK	LOOP HOT LEG	RANGE:0-500
CHANNEL	57	BOT WALL	T/C	STA-03	UNBRK	LOOP HOT LEG	RANGE:0-500
CHANNEL	58	TOP FLUID	T/C	STA-03	UNBRK	LOOP HOT LEG	RANGE:0-500
CHANNEL	59	BOT FLUID	T/C	STA-03	UNBRK	LOOP HOT LEG	RANGE:0-500
CHANNEL	60	TOP FLUID	T/C	STA-04	UNBRK	LOOP HOT LEG	RANGE:0-500
CHANNEL	61	BOT FLUID	T/C	STA-04	UNBRK	LOOP HOT LEG	RANGE:0-500
CHANNEL	62	TOP FLUID	T/C	STA-05	UNBRK	LOOP HOT LEG	RANGE:0-500
CHANNEL	63	TOP WALL	T/C	STA-05	UNBRK	LOOP HOT LEG	RANGE:0-500
CHANNEL	64	BOT FLUID	T/C	STA-05	UNBRK	LOOP HOT LEG	RANGE:0-500

TABLE 6-4 (cont)

FLECHT SEASET NATURAL CIRCULATION AND REFLUX CONDENSATION TESTS CDAS INSTRUMENTATION LIST

CHANNEL	65	BOT	WALL	T/C	STA-05	UNBRK	LOOP	HOT	LEG	RANGE:0-500
CHANNEL	66	BOT	INSUL	T/C	STA-05	UNBRK	LOOP	HOT	LEG	RANGE:0-500
CHANNEL	67	TOP	FLUID	T/C	STA-06	UNBRK	LOOP	HOT	LEG	RANGE:0-500
CHANNEL	68	TOP	WALL	T/C	STA-06	UNBRK	LOOP	HOT	LEG	RANGE:0-500
CHANNEL	69	TOP	INSUL	T/C	STA-06	UNBRK	LOOP	HOT	LEG	RANGE:0-500
CHANNEL	70	BOT	FLUID	T/C	STA-06	UNBRK	LOOP	HOT	LEG	RANGE:0-500
CHANNEL	71	BOT	WALL	T/C	STA-06	UNBRK	LOOP	HOT	LEG	RANGE:0-500
CHANNEL	72	TOP	FLUID	T/C	STA-07	UNBRK	LOOP	HOT	LEG	RANGE:0-500
CHANNEL	73	BOT	FLUID	T/C	STA-07	UNBRK	LOOP	HOT	LEG	RANGE:0-500
CHANNEL	74	TOP	FLUID	T/C	STA-08	UNBRK	LOOP	HOT	LEG	RANGE:0-500
CHANNEL	75	BOT	FLUID	T/C	STA-08	UNBRK	LOOP	HOT	LEG	RANGE:0-500
CHANNEL	76	TOP	FLUID	T/C	STA-09	UNBRK	LOOP	HOT	LEG	RANGE:0-500
CHANNEL	77	BOT	FLUID	T/C	STA-09	UNBRK	LOOP	HOT	LEG	RANGE:0-500
CHANNEL	78	TOP	FLUID	T/C	STA-10	UNBRK	LOOP	HOT	LEG	RANGE:0-500
CHANNEL	79	TOP	WALL	T/C	STA-10	UNBRK	LOOP	HOT	LEG	RANGE:0-500
CHANNEL	80	TOP	INSUL	T/C	STA-10	UNBRK	LOOP	HOT	LEG	RANGE:0-500
CHANNEL	81	BOT	FLUID	T/C	STA-10	UNBRK	LOOP	HOT	LEG	RANGE:0-500
CHANNEL	82	BOT	WALL	T/C	STA-10	UNBRK	LOOP	HOT	LEG	RANGE:0-500
CHANNEL	83		FLUID	T/C	STA-11	UNBRK	LOOP	PUMP	LP	SEAL 0-500
CHANNEL	84		WALL	T/C	STA-11	UNBRK	LOOP	PUMP	LP	SEAL 0-500
CHANNEL	85		FLUID	T/C	STA-12	UNBRK	LOOP	PUMP	LP	SEAL 0-500
CHANNEL	86		WALL	T/C	STA-12	UNBRK	LOOP	PUMP	LP	SEAL 0-500
CHANNEL	87		INSUL	T/C	STA-12	UNBRK	LOOP	PUMP	LP	SEAL 0-500
CHANNEL	88		FLUID	T/C	STA-13	UNBRK	LOOP	PUMP	LP	SEAL 0-500
CHANNEL	89		WALL	T/C	STA-13	UNBRK	LOOP	PUMP	LP	SEAL 0-500
CHANNEL	90		INSUL	T/C	STA-13	UNBRK	LOOP	PUMP	LP	SEAL 0-500
CHANNEL	91		FLUID	T/C	STA-14	UNBRK	LOOP	PUMP	LP	SEAL 0-500
CHANNEL	92		WALL	T/C	STA-14	UNBRK	LOOP	PUMP	LP	SEAL 0-500
CHANNEL	93		FLUID	T/C	STA-15	UNBRK	LOOP	PUMP	LP	SEAL 0-500

TABLE 6-4 (cont)

FLECHT SEASET NATURAL CIRCULATION AND

REFLUX CONDENSATION TESTS

CDAS INSTRUMENTATION LIST

CHANNEL	94		WALL	T/C	STA-15	UNBRK	LOOP	PUMP LP SEAL	0-500
CHANNEL	95		INSUL	T/C	STA-15	UNBRK	LOOP	PUMP LP SEAL	0-500
CHANNEL	96	SPARE							
CHANNEL	97	BOT	FLUID	T/C	STA-16	UNBRK	LOOP	COLD LEG	RANGE:0-500
CHANNEL	98	TOP	FLUID	T/C	STA-17	UNBRK	LOOP	COLD LEG	RANGE:0-500
CHANNEL	99	TOP	WALL	T/C	STA-17	UNBRK	LOOP	COLD LEG	RANGE:0-500
CHANNEL	100	TOP	INSUL	T/C	STA-17	UNBRK	LOOP	COLD LEG	RANGE:0-500
CHANNEL	101	BOT	FLUID	T/C	STA-17	UNBRK	LOOP	COLD LEG	RANGE:0-500
CHANNEL	102	BOT	WALL	T/C	STA-17	UNBRK	LOOP	COLD LEG	RANGE:0-500
CHANNEL	103	TOP	FLUID	T/C	STA-18	UNBRK	LOOP	COLD LEG	RANGE:0-500
CHANNEL	104	BOT	FLUID	T/C	STA-18	UNBRK	LOOP	COLD LEG	RANGE:0-500
CHANNEL	105	TOP	FLUID	T/C	STA-19	UNBRK	LOOP	COLD LEG	RANGE:0-500
CHANNEL	106	BOT	FLUID	T/C	STA-19	UNBRK	LOOP	COLD LEG	RANGE:0-500
CHANNEL	107	CLD	LG IN	T/C	STA-20	UNBRK	LOOP	COLD LEG	RANGE:0-500
CHANNEL	108	TOP	FLUID	T/C	STA-21	UNBRK	LOOP	COLD LEG	RANGE:0-500
CHANNEL	109	BOT	FLUID	T/C	STA-21	UNBRK	LOOP	COLD LEG	RANGE:0-500
CHANNEL	110	TOP	FLUID	T/C	STA-22	UNBRK	LOOP	COLD LEG	RANGE:0-500
CHANNEL	111	TOP	WALL	T/C	STA-22	UNBRK	LOOP	COLD LEG	RANGE:0-500
CHANNEL	112	TOP	INSUL	T/C	STA-22	UNBRK	LOOP	COLD LEG	RANGE:0-500
CHANNEL	113	BOT	FLUID	T/C	STA-22	UNBRK	LOOP	COLD LEG	RANGE:0-500
CHANNEL	114	BOT	WALL	T/C	STA-22	UNBRK	LOOP	COLD LEG	RANGE:0-500
CHANNEL	115	TOP	FLUID	T/C	STA-23	UNBRK	LOOP	COLD LEG	RANGE:0-500
CHANNEL	116	TOP	WALL	T/C	STA-23	UNBRK	LOOP	COLD LEG	RANGE:0-500
CHANNEL	117	TOP	INSUL	T/C	STA-23	UNBRK	LOOP	COLD LEG	RANGE:0-500
CHANNEL	118	TOP	FLUID	T/C	STA-24	UNBRK	LOOP	COLD LEG	RANGE:0-500
CHANNEL	119	BOT	FLUID	T/C	STA-24	UNBRK	LOOP	COLD LEG	RANGE:0-500
CHANNEL	120	CLD	LG IN	T/C	STA-26	UNBRK	LOOP	COLD LEG	RANGE:0-500
CHANNEL	121	TOP	WALL	T/C	STA-26	UNBRK	LOOP	COLD LEG	RANGE:0-500
CHANNEL	122	BOT	FLUID	T/C	STA-26	UNBRK	LOOP	COLD LEG	RANGE:0-500

TABLE 6-4 (cont)

FLECHT SEASET NATURAL CIRCULATION AND

REFLUX CONDENSATION TESTS

CDAS INSTRUMENTATION LIST

CHANNEL 123	BOT WALL	T/C	STA-26	UNBRK LOOP COLD LEG	RANGE:0-500
CHANNEL 124	BOT INSUL	T/C	STA-26	UNBRK LOOP COLD LEG	RANGE:0-500
CHANNEL 125	EXIT NOZ UP PR			BRK LOOP HOT LEG	RANGE:0-500
CHANNEL 126	TOP FLUID	T/C	STA-28	BRK LOOP HOT LEG	RANGE:0-500
CHANNEL 127	TOP WALL	T/C	STA-28	BRK LOOP HOT LEG	RANGE:0-500
CHANNEL 128	TOP INSUL	T/C	STA-28	BRK LOOP HOT LEG	RANGE:0-500
CHANNEL 129	BOT FLUID	T/C	STA-28	BRK LOOP HOT LEG	RANGE:0-500
CHANNEL 130	BOT WALL	T/C	STA-28	BRK LOOP HOT LEG	RANGE:0-500
CHANNEL 131	TOP FLUID	T/C	STA-29	BRK LOOP HOT LEG	RANGE:0-500
CHANNEL 132	BOT FLUID	T/C	STA-29	BRK LOOP HOT LEG	RANGE:0-500
CHANNEL 133	TOP FLUID	T/C	STA-30	BRK LOOP HOT LEG	RANGE:0-500
CHANNEL 134	BOT FLUID	T/C	STA-30	BRK LOOP HOT LEG	RANGE:0-500
CHANNEL 135	TOP FLUID	T/C	STA-31	BRK LOOP HOT LEG	RANGE:0-500
CHANNEL 136	TOP WALL	T/C	STA-31	BRK LOOP HOT LEG	RANGE:0-500
CHANNEL 137	BOT FLUID	T/C	STA-31	BRK LOOP HOT LEG	RANGE:0-500
CHANNEL 138	BOT WALL	T/C	STA-31	BRK LOOP HOT LEG	RANGE:0-500
CHANNEL 139	BOT INSUL	T/C	STA-31	BRK LOOP HOT LEG	RANGE:0-500
CHANNEL 140	TOP FLUID	T/C	STA-32	BRK LOOP HOT LEG	RANGE:0-500
CHANNEL 141	TOP WALL	T/C	STA-32	BRK LOOP HOT LEG	RANGE:0-500
CHANNEL 142	TOP INSUL	T/C	STA-32	BRK LOOP HOT LEG	RANGE:0-500
CHANNEL 143	BOT FLUID	T/C	STA-32	BRK LOOP HOT LEG	RANGE:0-500
CHANNEL 144	BOT WALL	T/C	STA-32	BRK LOOP HOT LEG	RANGE:0-500
CHANNEL 145	TOP FLUID	T/C	STA-33	BRK LOOP HOT LEG	RANGE:0-500
CHANNEL 146	BOT FLUID	T/C	STA-33	BRK LOOP HOT LEG	RANGE:0-500
CHANNEL 147	TOP FLUID	T/C	STA-34	BRK LOOP HOT LEG	RANGE:0-500
CHANNEL 148	BOT FLUID	T/C	STA-34	BRK LOOP HOT LEG	RANGE:0-500
CHANNEL 149	TOP WALL	T/C	STA-34	BRK LOOP HOT LEG	RANGE:0-500
CHANNEL 150	BOT WALL	T/C	STA-34	BRK LOOP HOT LEG	RANGE:0-500

TABLE 6-4 (cont)

FLECHT SEASET NATURAL CIRCULATION AND

REFLUX CONDENSATION TESTS

CDAS INSTRUMENTATION LIST

CHANNEL 151	TOP	FLUID	T/C	STA-35	BRK LOOP HOT LEG		RANGE:0-500
CHANNEL 152	TOP	WALL	T/C	STA-35	BRK LOOP HOT LEG		RANGE:0-500
CHANNEL 153	TOP	INSUL	T/C	STA-35	BRK LOOP HOT LEG		RANGE:0-500
CHANNEL 154	BOT	FLUID	T/C	STA-35	BRK LOOP HOT LEG		RANGE:0-500
CHANNEL 155	BOT	WALL	T/C	STA-35	BRK LOOP HOT LEG		RANGE:0-500
CHANNEL 156		FLUID	T/C	STA-36	BRK LOOP PUMP LP SEAL		0-500
CHANNEL 157		WALL	T/C	STA-36	BRK LOOP PUMP LP SEAL		0-500
CHANNEL 158		FLUID	T/C	STA-37	BRK LOOP PUMP LP SEAL		0-500
CHANNEL 159		WALL	T/C	STA-37	BRK LOOP PUMP LP SEAL		0-500
CHANNEL 160		INSUL	T/C	STA-37	BRK LOOP PUMP LP SEAL		0-500
CHANNEL 161		FLUID	T/C	STA-38	BRK LOOP PUMP LP SEAL		0-500
CHANNEL 162		WALL	T/C	STA-38	BRK LOOP PUMP LP SEAL		0-500
CHANNEL 163		INSUL	T/C	STA-38	BRK LOOP PUMP LP SEAL		0-500
CHANNEL 164		FLUID	T/C	STA-39	BRK LOOP PUMP LP SEAL		0-500
CHANNEL 165		WALL	T/C	STA-39	BRK LOOP PUMP LP SEAL		0-500
CHANNEL 166		FLUID	T/C	STA-40	BRK LOOP PUMP LP SEAL		0-500
CHANNEL 167		WALL	T/C	STA-40	BRK LOOP PUMP LP SEAL		0-500
CHANNEL 168		INSUL	T/C	STA-40	BRK LOOP PUMP LP SEAL		0-500
CHANNEL 169	TOP	FLUID	T/C	STA-41	BRK LOOP COLD LEG		RANGE:0-500
CHANNEL 170	BOT	FLUID	T/C	STA-41	BRK LOOP COLD LEG		RANGE:0-500
CHANNEL 171	TOP	FLUID	T/C	STA-42	BRK LOOP COLD LEG		RANGE:0-500
CHANNEL 172	TOP	WALL	T/C	STA-42	BRK LOOP COLD LEG		RANGE:0-500
CHANNEL 173	TOP	INSUL	T/C	STA-42	BRK LOOP COLD LEG		RANGE:0-500
CHANNEL 174	BOT	FLUID	T/C	STA-43	BRK LOOP COLD LEG		RANGE:0-500
CHANNEL 175	BOT	WALL	T/C	STA-43	BRK LOOP COLD LEG		RANGE:0-500
CHANNEL 176	TOP	FLUID	T/C	STA-43	BRK LOOP COLD LEG		RANGE:0-500
CHANNEL 177	TOP	WALL	T/C	STA-43	BRK LOOP COLD LEG		RANGE:0-500
CHANNEL 178	TOP	INSUL	T/C	STA-43	BRK LOOP COLD LEG		RANGE:0-500
CHANNEL 179	TOP	FLUID	T/C	STA-44	BRK LOOP COLD LEG		RANGE:0-500

TABLE 6-4 (cont)

FLECHT SEASET NATURAL CIRCULATION AND

REFLUX CONDENSATION TESTS

CDAS INSTRUMENTATION LIST

CHANNEL	180	BOT	FLUID	T/C	STA-44	BRK	LOOP	COLD	LEG	RANGE:	0-500
CHANNEL	181	TOP	FLUID	T/C	STA-45	BRK	LOOP	COLD	LEG	RANGE:	0-500
CHANNEL	182	BOT	FLUID	T/C	STA-45	BRK	LOOP	COLD	LEG	RANGE:	0-500
CHANNEL	183	TOP	FLUID	T/C	STA-46	BRK	LOOP	COLD	LEG	RANGE:	0-500
CHANNEL	184	TOP	WALL	T/C	STA-46	BRK	LOOP	COLD	LEG	RANGE:	0-500
CHANNEL	185	BOT	FLUID	T/C	STA-46	BRK	LOOP	COLD	LEG	RANGE:	0-500
CHANNEL	186	BOT	WALL	T/C	STA-46	BRK	LOOP	COLD	LEG	RANGE:	0-500
CHANNEL	187	BOT	INSUL	T/C	STA-46	BRK	LOOP	COLD	LEG	RANGE:	0-500
CHANNEL	188	TOP	FLUID	T/C	STA-47	BRK	LOOP	COLD	LEG	RANGE:	0-500
CHANNEL	189	TOP	WALL	T/C	STA-47	BRK	LOOP	COLD	LEG	RANGE:	0-500
CHANNEL	190	TOP	INSUL	T/C	STA-47	BRK	LOOP	COLD	LEG	RANGE:	0-500
CHANNEL	191	BOT	FLUID	T/C	STA-47	BRK	LOOP	COLD	LEG	RANGE:	0-500
CHANNEL	192	BOT	WALL	T/C	STA-47	BRK	LOOP	COLD	LEG	RANGE:	0-500
CHANNEL	193	TOP	FLUID	T/C	STA-48	BRK	LOOP	COLD	LEG	RANGE:	0-500
CHANNEL	194	TOP	WALL	T/C	STA-48	BRK	LOOP	COLD	LEG	RANGE:	0-500
CHANNEL	195	BOT	FLUID	T/C	STA-48	BRK	LOOP	COLD	LEG	RANGE:	0-500
CHANNEL	196	BOT	WALL	T/C	STA-48	BRK	LOOP	COLD	LEG	RANGE:	0-500
CHANNEL	197	BOT	INSUL	T/C	STA-48	BRK	LOOP	COLD	LEG	RANGE:	0-500
CHANNEL	198	COLD	LEG	INJ LN	FL T/C	UNBRK	LOOP	COLD	LEG	RANGE:	0-500
CHANNEL	199	ACCUM 1	FL	T/C						RANGE:	0-500
CHANNEL	200	EXIT	NOZ	UP	PR	UNBRK	LOOP	HOT	LEG	RANGE:	0-500
CHANNEL	201	INLET	PLNM	ST	PR	UNBRK	LOOP	ST	GEN	RANGE:	0-500
CHANNEL	202	INLET	WALL	T/C		UNBRK	LOOP	ST	GEN	RANGE:	0-500
CHANNEL	203	OUTLT	PLNM	ST	PR	UNBRK	LOOP	ST	GEN	RANGE:	0-500
CHANNEL	204	OUTLT	WALL	T/C		UNBRK	LOOP	ST	GEN	RANGE:	0-500
CHANNEL	205	INL	TUBE	WALL	T/C 0	FT UNBRK	LOOP	ST	GEN	101	B-3 0-500
CHANNEL	206	INL	TUBE	WALL	T/C 0	FT UNBRK	LOOP	ST	GEN	113	D-6 0-500
CHANNEL	207	INL	TUBE	WALL	T/C 0	FT UNBRK	LOOP	ST	GEN	126	H-9 0-500
CHANNEL	208	INL	SEC	SIDE	F-T/C 0	FT UNBRK	LOOP	ST	GEN	1	A-4 0-500
CHANNEL	209	INL	SEC	SIDE	F-T/C 0	FT UNBRK	LOOP	ST	GEN	8	C-5 0-500

TABLE 6-4 (cont)

FLECHT SEASET NATURAL CIRCULATION AND

REFLUX CONDENSATION TESTS

CDAS INSTRUMENTATION LIST

CHANNEL	210	INL	SEC	SIDE	F-T/C	0	FT	UNBRK	LOOP	ST	GEN	21	E-8 0-500
CHANNEL	211	INL	SEC	SIDE	F-T/C	0	FT	UNBRK	LOOP	ST	GEN	31	H-7 0-500
CHANNEL	212	INL	TUBE	WALL	T/C	.5	FT	UNBRK	LOOP	ST	GEN	102	B-3 0-500
CHANNEL	213	INL	TUBE	WALL	T/C	.5	FT	UNBRK	LOOP	ST	GEN	114	D-6 0-500
CHANNEL	214	INL	TUBE	WALL	T/C	.5	FT	UNBRK	LOOP	ST	GEN	119	F-6 0-500
CHANNEL	215	INL	TUBE	WALL	T/C	.5	FT	UNBRK	LOOP	ST	GEN	127	H-9 0-500
CHANNEL	216	INL	SEC	SIDE	F-T/C	.5	FT	UNBRK	LOOP	ST	GEN	2	A-4 0-500
CHANNEL	217	INL	SEC	SIDE	F-T/C	.5	FT	UNBRK	LOOP	ST	GEN	9	C-5 0-500
CHANNEL	218	INL	SEC	SIDE	F-T/C	.5	FT	UNBRK	LOOP	ST	GEN	32	H-7 0-500
CHANNEL	219	INL	TUBE	WALL	T/C	1	FT	UNBRK	LOOP	ST	GEN	103	B-3 0-500
CHANNEL	220	INL	TUBE	WALL	T/C	1	FT	UNBRK	LOOP	ST	GEN	115	D-6 0-500
CHANNEL	221	INL	TUBE	WALL	T/C	1	FT	UNBRK	LOOP	ST	GEN	128	H-9 0-500
CHANNEL	222	INL	SEC	SIDE	F-T/C	1	FT	UNBRK	LOOP	ST	GEN	3	A-4 0-500
CHANNEL	223	INL	SEC	SIDE	F-T/C	1	FT	UNBRK	LOOP	ST	GEN	19	C-12 0-500
CHANNEL	224	INL	SEC	SIDE	F-T/C	1	FT	UNBRK	LOOP	ST	GEN	23	E-8 0-500
CHANNEL	225	INL	SEC	SIDE	F-T/C	1	FT	UNBRK	LOOP	ST	GEN	33	H-7 0-500
CHANNEL	226	INL	PRI	ST	PR	1	FT	UNBRK	LOOP	ST	GEN	327	B-6 0-500
CHANNEL	227	INL	PRI	ST	PR	1	FT	UNBRK	LOOP	ST	GEN	310	C-4 0-500
CHANNEL	228	INL	PRI	ST	PR	1	FT	UNBRK	LOOP	ST	GEN	323	D-4 0-500
CHANNEL	229	INL	PRI	ST	PR	1	FT	UNBRK	LOOP	ST	GEN	329	E-3 0-500
CHANNEL	230	INL	SEC	SIDE	F-T/C	1.5	FT	UNBRK	LOOP	ST	GEN	4	A-4 0-500
CHANNEL	231	INL	SEC	SIDE	F-T/C	1.5	FT	UNBRK	LOOP	ST	GEN	11	C-5 0-500
CHANNEL	232	INL	SEC	FL	T/C	1.5	FT	UNBRK	LOOP	ST	GEN	24	E-8 0-500
CHANNEL	233	INL	SEC	SIDE	F-T/C	1.5	FT	UNBRK	LOOP	ST	GEN	34	H-7 0-500
CHANNEL	234	INL	TUBE	WALL	T/C	2	FT	UNBRK	LOOP	ST	GEN	104	B-3 0-500
CHANNEL	235	INL	TUBE	WALL	T/C	2	FT	UNBRK	LOOP	ST	GEN	116	D-6 0-500
CHANNEL	236	INL	TUBE	WALL	T/C	2	FT	UNBRK	LOOP	ST	GEN	121	F-6 0-500
CHANNEL	237	INL	TUBE	WALL	T/C	2	FT	UNBRK	LOOP	ST	GEN	129	H-9 0-500
CHANNEL	238	INL	SEC	SIDE	F-T/C	2	FT	UNBRK	LOOP	ST	GEN	5	A-4 0-500
CHANNEL	239	INL	SEC	SIDE	F-T/C	2	FT	UNBRK	LOOP	ST	GEN	12	C-5 0-500

TABLE 6-4 (cont)

FLECHT SEASET NATURAL CIRCULATION AND

REFLUX CONDENSATION TESTS

CDAS INSTRUMENTATION LIST

CHANNEL	240	INL	SEC	SIDE	F-T/C	2	FT	UNBRK	LOOP	ST	GEN	25	E-8	0-500
CHANNEL	241	INL	PRI	ST	PR	2	FT	UNBRK	LOOP	ST	GEN	326	B-6	0-500
CHANNEL	242	INL	PRI	ST	PR	2	FT	UNBRK	LOOP	ST	GEN	325	C-4	0-500
CHANNEL	243	INL	PRI	ST	PR	2	FT	UNBRK	LOOP	ST	GEN	326	E-3	0-500
CHANNEL	244	INL	TUBE	WALL	T/C	4	FT	UNBRK	LOOP	ST	GEN	105	B-3	0-500
CHANNEL	245	INL	TUBE	WALL	T/C	4	FT	UNBRK	LOOP	ST	GEN	117	D-6	0-500
CHANNEL	246	INL	TUBE	WALL	T/C	4	FT	UNBRK	LOOP	ST	GEN	122	F-6	0-500
CHANNEL	247	INL	TUBE	WALL	T/C	4	FT	UNBRK	LOOP	ST	GEN	130	H-9	0-500
CHANNEL	248	INL	SEC	SIDE	F-T/C	4	FT	UNBRK	LOOP	ST	GEN	13	C-5	0-500
CHANNEL	249	INL	PRI	ST	PR	4	FT	UNBRK	LOOP	ST	GEN	334	B-6	0-500
CHANNEL	250	INL	PRI	ST	PR	4	FT	UNBRK	LOOP	ST	GEN	336	C-4	0-500
CHANNEL	251	INL	PRI	ST	PR	4	FT	UNBRK	LOOP	ST	GEN	335	D-4	0-500
CHANNEL	252	INL	PRI	ST	PR	6	FT	UNBRK	LOOP	ST	GEN	333	C-2	0-500
CHANNEL	253	INL	PRI	ST	PR	6	FT	UNBRK	LOOP	ST	GEN	347	D-2	0-500
CHANNEL	254	INL	TUBE	WALL	T/C	10	FT	UNBRK	LOOP	ST	GEN	106	B-3	0-500
CHANNEL	255	INL	TUBE	WALL	T/C	10	FT	UNBRK	LOOP	ST	GEN	131	H-9	0-500
CHANNEL	256	INL	SEC	SIDE	F-T/C	10	FT	UNBRK	LOOP	ST	GEN	7	A-4	0-500
CHANNEL	257	INL	SEC	SIDE	F-T/C	10	FT	UNBRK	LOOP	ST	GEN	14	C-5	0-500
CHANNEL	258	INL	SEC	SIDE	F-T/C	10	FT	UNBRK	LOOP	ST	GEN	27	E-8	0-500
CHANNEL	259	INL	SEC	SIDE	F-T/C	10	FT	UNBRK	LOOP	ST	GEN	37	H-7	0-500
CHANNEL	260	INL	PRI	ST	PR	10	FT	UNBRK	LOOP	ST	GEN	343	B-1	0-500
CHANNEL	261	INL	PRI	ST	PR	10	FT	UNBRK	LOOP	ST	GEN	332	C-2	0-500
CHANNEL	262	INL	PRI	ST	PR	10	FT	UNBRK	LOOP	ST	GEN	346	D-2	0-500
CHANNEL	263	INL	PRI	ST	PR	15	FT	UNBRK	LOOP	ST	GEN	342	B-1	0-500
CHANNEL	264	INL	PRI	ST	PR	15	FT	UNBRK	LOOP	ST	GEN	348	C-2	0-500
CHANNEL	265	INL	PRI	ST	PR	15	FT	UNBRK	LOOP	ST	GEN	344	D-2	0-500
CHANNEL	266	INL	SEC	SIDE	F-T/C	20	FT	UNBRK	LOOP	ST	GEN	15	C-5	0-500
CHANNEL	267	INL	TUBE	WALL	T/C	27	FT	UNBRK	LOOP	ST	GEN	133	H-9	0-500

TABLE 6-4 (cont)

FLECHT SEASET NATURAL CIRCULATION AND

REFLUX CONDENSATION TESTS

CDAS INSTRUMENTATION LIST

CHANNEL	268	INL	SEC	SIDE	F-T/C	27	FT	UNBRK	LOOP	ST	GEN	16	C-5	0-500
CHANNEL	269	INL	PRI	ST	PR	27	FT	UNBRK	LOOP	ST	GEN	F	B-2	0-500
CHANNEL	270	INL	PRI	ST	PR	27	FT	UNBRK	LOOP	ST	GEN	E	C-3	0-500
CHANNEL	271	INL	PRI	ST	PR	27	FT	UNBRK	LOOP	ST	GEN	I	D-3	0-500
CHANNEL	272	INL	PRI	ST	PR	27	FT	UNBRK	LOOP	ST	GEN	H	E-1	0-500
CHANNEL	273	INL	TUBE	WALL	T/C	35	FT	UNBRK	LOOP	ST	GEN	109	B-3	0-500
CHANNEL	274	INL	TUBE	WALL	T/C	35	FT	UNBRK	LOOP	ST	GEN	134	H-9	0-500
CHANNEL	275	INL	TIBE	WALL	T/C	35	FT	UNBRK	LOOP	ST	GEN	17	C-5	0-500
CHANNEL	276	INL	TUBE	WALL	T/C	35	FT	UNBRK	LOOP	ST	GEN	40	H-7	0-500
CHANNEL	277	OUTL	PRI	ST	PR	27	FT	UNBRK	LOOP	ST	GEN	D	F-5	0-500
CHANNEL	278	OUTL	PRI	ST	PR	27	FT	UNBRK	LOOP	ST	GEN	C	G-3	0-500
CHANNEL	279	OUTL	PRI	ST	PR	27	FT	UNBRK	LOOP	ST	GEN	B	H-3	0-500
CHANNEL	280	OUTL	PRI	ST	PR	27	FT	UNBRK	LOOP	ST	GEN	G	J-2	0-500
CHANNEL	281	OUTL	TUBE	WALL	T/C	20	FT	UNBRK	LOOP	ST	GEN	144	M-6	0-500
CHANNEL	282	OUTL	PRI	ST	PR	15	FT	UNBRK	LOOP	ST	GEN	341	F-8	0-500
CHANNEL	283	OUTL	PRI	ST	PR	15	FT	UNBRK	LOOP	ST	GEN	349	H-2	0-500
CHANNEL	284	OUTL	TUBE	WALL	T/C	10	FT	UNBRK	LOOP	ST	GEN	143	M-6	0-500
CHANNEL	285	OUTL	TUBE	WALL	T/C	10	FT	UNBRK	LOOP	ST	GEN	153	Q-4	0-500
CHANNEL	286	OUTL	SEC	SIDEF	-T/C	10	FT	UNBRK	LOOP	ST	GEN	47	L-2	0-500
CHANNEL	287	OUTL	PRI	ST	PR	10	FT	UNBRK	LOOP	ST	GEN	350	F-8	0-500
CHANNEL	288	OUTL	PRI	ST	PR	10	FT	UNBRK	LOOP	ST	GEN	358	H-2	0-500
CHANNEL	289	OUTL	PRI	ST	PR	10	FT	UNBRK	LOOP	ST	GEN	353	G-2	0-500
CHANNEL	290	OUTL	TUBE	WALL	T/C	4	FT	UNBRK	LOOP	ST	GEN	142	M-6	0-500
CHANNEL	291	OUTL	TUBE	WALL	T/C	4	FT	UNBRK	LOOP	ST	GEN	152	Q-4	0-500
CHANNEL	292	OUTL	SEC	SIDEF	-T/C	4	FT	UNBRK	LOOP	ST	GEN	66	K-5	0-500
CHANNEL	293	OUTL	TUBE	WALL	T/C	2	FT	UNBRK	LOOP	ST	GEN	137	K-1	0-500
CHANNEL	294	OUTL	TUBE	WALL	T/C	2	FT	UNBRK	LOOP	ST	GEN	141	M-6	0-500
CHANNEL	295	OUTL	TUBE	WALL	T/C	2	FT	UNBRK	LOOP	ST	GEN	147	O-6	0-500
CHANNEL	296	OUTL	TUBE	WALL	T/C	2	FT	UNBRK	LOOP	ST	GEN	151	Q-4	0-500
CHANNEL	297	OUTL	SEC	SIDEF	-T/C	2	FT	UNBRK	LOOP	ST	GEN	51	N-5	0-500

TABLE 6-4 (cont)

FLECHT SEASET NATURAL CIRCULATION AND

REFLUX CONDENSATION TESTS

CDAS INSTRUMENTATION LIST

CHANNEL	298	OUTL	PRI	ST	PR	2	FT	UNBRK	LOOP	ST	GEN	301	F-8	0-500
CHANNEL	299	OUTL	PRI	ST	PR	2	FT	UNBRK	LOOP	ST	GEN	307	G-4	0-500
CHANNEL	300	OUTL	PRI	ST	PR	2	FT	UNBRK	LOOP	ST	GEN	317	J-1	0-500
CHANNEL	301	OUTL	PRI	ST	PR	2	FT	UNBRK	LOOP	ST	GEN	304	J-6	0-500
CHANNEL	302	OUTL	TUBE	WALL	T/C	1	FT	UNBRK	LOOP	ST	GEN	136	K-1	0-500
CHANNEL	303	OUTL	TUBE	WALL	T/C	1	FT	UNBRK	LOOP	ST	GEN	146	M-6	0-500
CHANNEL	304	OUTL	TUBE	WALL	T/C	1	FT	UNBRK	LOOP	ST	GEN	146	Q-6	0-500
CHANNEL	305	OUTL	TUBE	WALL	T/C	1	FT	UNBRK	LOOP	ST	GEN	150	Q-4	0-500
CHANNEL	306	OUTL	SEC	SIDE	F-T/C	1	FT	UNBRK	LOOP	ST	GEN	43	L-2	0-500
CHANNEL	307	OUTL	PRI	ST	PR	1	FT	UNBRK	LOOP	ST	GEN	302	F-8	0-500
CHANNEL	308	OUTL	PRI	ST	PR	1	FT	UNBRK	LOOP	ST	GEN	319	G-4	0-500
CHANNEL	309	OUTL	PRI	ST	PR	1	FT	UNBRK	LOOP	ST	GEN	306	H-4	0-500
CHANNEL	310	OUTL	PRI	ST	PR	1	FT	UNBRK	LOOP	ST	GEN	303	J-6	0-500
CHANNEL	311	OUTL	TUBE	WALL	T/C	.5	FT	UNBRK	LOOP	ST	GEN	149	Q-4	0-500
CHANNEL	312	OUTL	SEC	SIDE	F-T/C	.5	FT	UNBRK	LOOP	ST	GEN	42	L-2	0-500
CHANNEL	313	OUTL	SEC	SIDE	F-T/C	.5	FT	UNBRK	LOOP	ST	GEN	56	R-5	0-500
CHANNEL	314	OUTL	TUBE	WALL	T/C	0	FT	UNBRK	LOOP	ST	GEN	148	Q-4	0-500
CHANNEL	315	OUTL	SEC	SIDE	F-T/C	0	FT	UNBRK	LOOP	ST	GEN	41	L-2	0-500
CHANNEL	316	OUTL	SEC	SIDE	F-T/C	0	FT	UNBRK	LOOP	ST	GEN	49	N-5	0-500
CHANNEL	317	OUTL	SEC	SIDE	F-T/C	0	FT	UNBRK	LOOP	ST	GEN	55	R-5	0-500
CHANNEL	318	OUTL	PRI	ST	PR	0	FT	UNBRK	LOOP	ST	GEN	330	F-8	0-500
CHANNEL	319	OUTL	PRI	ST	PR	0	FT	UNBRK	LOOP	ST	GEN	316	G-4	0-500
CHANNEL	320	OUTL	PRI	ST	PR	0	FT	UNBRK	LOOP	ST	GEN	305	J-6	0-500
CHANNEL	321	ACCUM	2		F-T/C									0-500
CHANNEL	322	INL	TUBE	WALL	T/C	.25	FT	BRK	LOOP	ST	GEN	73	A-5	0-500
CHANNEL	323	INL	TUBE	WALL	T/C	.25	FT	BRK	LOOP	ST	GEN	69	C-4	0-500
CHANNEL	324	INL	TUBE	WALL	T/C	.25	FT	BRK	LOOP	ST	GEN	48	E-4	0-500
CHANNEL	325	INL	SEC	SIDE	F-T/C	.25	FT	BRK	LOOP	ST	GEN	19F	B-6	0-500
CHANNEL	326	INL	SEC	SIDE	F-T/C	.25	FT	BRK	LOOP	ST	GEN	7G	D-5	0-500
CHANNEL	327	INL	SEC	SIDE	F-T/C	.25	FT	BRK	LOOP	ST	GEN	1A	F-6	0-500

TABLE 6-4 (cont)

FLECHT SEASET NATURAL CIRCULATION AND

REFLUX CONDENSATION TESTS

CDAS INSTRUMENTATION LIST

CHANNEL	328	INL	TUBE	WALL	T/C	1	FT	BRK	LOOP	ST	GEN	54	A-5 0-500
CHANNEL	329	INL	TUBE	WALL	T/C	1	FT	BRK	LOOP	ST	GEN	46	C-4 0-500
CHANNEL	330	INL	TUBE	WALL	T/C	1	FT	BRK	LOOP	ST	GEN	45	E-4 0-500
CHANNEL	331	INL	SEC	SIDE	F-T/C	1	FT	BRK	LOOP	ST	GEN	26T	B-6 0-500
CHANNEL	332	INL	SEC	SIDE	F-T/C	1	FT	BRK	LOOP	ST	GEN	5E	D-5 0-500
CHANNEL	333	INL	SEC	SIDE	F-T/C	1	FT	BRK	LOOP	ST	GEN	11K	F-6 0-500
CHANNEL	334	INL	PRI	ST	PR	1	FT	BRK	LOOP	ST	GEN	105	C-8 0-500
CHANNEL	335	INL	PRI	ST	PR	1	FT	BRK	LOOP	ST	GEN	113	B-3 0-500
CHANNEL	336	INL	PRI	ST	PR	1	FT	BRK	LOOP	ST	GEN	112	A-7 0-500
CHANNEL	337	INL	TUBE	WALL	T/C	2	FT	BRK	LOOP	ST	GEN	53	A-5 0-500
CHANNEL	338	INL	TUBE	WALL	T/C	2	FT	BRK	LOOP	ST	GEN	70	C-4 0-500
CHANNEL	339	INL	TUBE	WALL	T/C	2	FT	BRK	LOOP	ST	GEN	49	E-4 0-500
CHANNEL	340	INL	SEC	SIDE	F-T/C	2	FT	BRK	LOOP	ST	GEN	15	B-6 0-500
CHANNEL	341	INL	SEC	SIDE	F-T/C	2	FT	BRK	LOOP	ST	GEN	24A1	D-5 0-500
CHANNEL	342	INL	SEC	SIDE	F-T/C	2	FT	BRK	LOOP	ST	GEN	10J	F-6 0-500
CHANNEL	343	INL	PRI	ST	PR	2	FT	BRK	LOOP	ST	GEN	101	C-8 0-500
CHANNEL	344	INL	PRI	ST	PR	2	FT	BRK	LOOP	ST	GEN	106	B-3 0-500
CHANNEL	345	INL	PRI	ST	PR	2	FT	BRK	LOOP	ST	GEN	108	A-7 0-500
CHANNEL	346	INL	TUBE	WALL	T/C	4	FT	BRK	LOOP	ST	GEN	59	A-5 0-500
CHANNEL	347	INL	TUBE	WALL	T/C	4	FT	BRK	LOOP	ST	GEN	71	C-4 0-500
CHANNEL	348	INL	TUBE	WALL	T/C	4	FT	BRK	LOOP	ST	GEN	24	E-4 0-500
CHANNEL	349	INL	SEC	SIDE	F-T/C	4	FT	BRK	LOOP	ST	GEN	6F	B-6 0-500
CHANNEL	350	INL	SEC	SIDE	F-T/C	4	FT	BRK	LOOP	ST	GEN	25A2	D-5 0-500
CHANNEL	351	INL	SEC	SIDE	F-T/C	4	FT	BRK	LOOP	ST	GEN	28	F-6 0-500
CHANNEL	352	INL	PRI	ST	PR	4	FT	BRK	LOOP	ST	GEN	102	C-8 0-500
CHANNEL	353	INL	PRI	ST	PR	4	FT	BRK	LOOP	ST	GEN	118	B-3 0-500
CHANNEL	354	INL	PRI	ST	PR	4	FT	BRK	LOOP	ST	GEN	119	A-7 0-500
CHANNEL	355	INL	TUBE	WALL	T/C	6	FT	BRK	LOOP	ST	GEN	10	A-5 0-500
CHANNEL	356	INL	TUBE	WALL	T/C	6	FT	BRK	LOOP	ST	GEN	6	C-4 0-500
CHANNEL	357	INL	TUBE	WALL	T/C	6	FT	BRK	LOOP	ST	GEN	1	E-4 0-500

TABLE 6-4 (cont)

FLECHT SEASET NATURAL CIRCULATION AND

REFLUX CONDENSATION TESTS

CDAS INSTRUMENTATION LIST

CHANNEL	358	INL	SEC	SIDE	F-T/C	6	FT	BRK	LOOP	ST	GEN	43H	B-6	0-500
CHANNEL	359	INL	SEC	SIDE	F-T/C	6	FT	BRK	LOOP	ST	GEN	44I	D-5	0-500
CHANNEL	360	INL	SEC	SIDE	F-T/C	6	FT	BRK	LOOP	ST	GEN	47L	F-6	0-500
CHANNEL	361	INL	PRI	ST	PR	6	FT	BRK	LOOP	ST	GEN	156	C-6	0-500
CHANNEL	362	INL	PRI	ST	PR	6	FT	BRK	LOOP	ST	GEN	160	B-5	0-500
CHANNEL	363	INL	PRI	ST	PR	6	FT	BRK	LOOP	ST	GEN	161	A-7	0-500
CHANNEL	364	INL	TUBE	WALL	T/C	10	FT	BRK	LOOP	ST	GEN	25	A-5	0-500
CHANNEL	365	INL	TUBE	WALL	T/C	10	FT	BRK	LOOP	ST	GEN	29	C-4	0-500
CHANNEL	366	INL	TUBE	WALL	T/C	10	FT	BRK	LOOP	ST	GEN	23	E-4	0-500
CHANNEL	367	INL	SEC	SIDE	F-T/C	10	FT	BRK	LOOP	ST	GEN	32G	B-6	0-500
CHANNEL	368	INL	SEC	SIDE	F-T/C	10	FT	BRK	LOOP	ST	GEN	33H	D-5	0-500
CHANNEL	369	INL	SEC	SIDE	F-T/C	10	FT	BRK	LOOP	ST	GEN	26A	F-6	0-500
CHANNEL	370	INL	PRI	ST	PR	10	FT	BRK	LOOP	ST	GEN	156	C-4	0-500
CHANNEL	371	INL	PRI	ST	PR	10	FT	BRK	LOOP	ST	GEN	166	A-5	0-500
CHANNEL	372	INL	PRI	ST	PR	10	FT	BRK	LOOP	ST	GEN	164	B-9	0-500
CHANNEL	373	INL	TUBE	WALL	T/C	20	FT	BRK	LOOP	ST	GEN	67	A-5	0-500
CHANNEL	374	INL	TUBE	WALL	T/C	20	FT	BRK	LOOP	ST	GEN	72	C-4	0-500
CHANNEL	375	INL	TUBE	WALL	T/C	20	FT	BRK	LOOP	ST	GEN	36	E-4	0-500
CHANNEL	376	INL	SEC	SIDE	F-T/C	20	FT	BRK	LOOP	ST	GEN	18K	B-6	0-500
CHANNEL	377	INL	SEC	SIDE	F-T/C	20	FT	BRK	LOOP	ST	GEN	29D	D-5	0-500
CHANNEL	378	INL	SEC	SIDE	F-T/C	20	FT	BRK	LOOP	ST	GEN	14N	F-6	0-500
CHANNEL	379	INL	PRI	ST	PR	15	FT	BRK	LOOP	ST	GEN	152	C-4	0-500
CHANNEL	380	INL	PRI	ST	PR	15	FT	BRK	LOOP	ST	GEN	146	A-5	0-500
CHANNEL	381	INL	PRI	ST	PR	15	FT	BRK	LOOP	ST	GEN	149	B-9	0-500
CHANNEL	382	INL	TUBE	WALL	T/C	27	FT	BRK	LOOP	ST	GEN	38	A-5	0-500
CHANNEL	383	INL	TUBE	WALL	T/C	27	FT	BRK	LOOP	ST	GEN	39	C-4	0-500
CHANNEL	384	INL	TUBE	WALL	T/C	27	FT	BRK	LOOP	ST	GEN	27	E-4	0-500
CHANNEL	385	INL	SEC	SIDE	F-T/C	27	FT	BRK	LOOP	ST	GEN	28C	B-6	0-500

TABLE 6-4 (cont)

FLECHT SEASET NATURAL CIRCULATION AND

REFLUX CONDENSATION TESTS

CDAS INSTRUMENTATION LIST

CHANNEL	386	INL	SEC	SIDE	F-T/C	27	FT	BRK	LOOP	ST	GEN	27B	D-5 0-500
CHANNEL	387	INL	SEC	SIDE	F-T/C	27	FT	BRK	LOOP	ST	GEN	35J	F-6 0-500
CHANNEL	388	INL	PRI	ST	PR	27	FT	BRK	LOOP	ST	GEN	100	C-4 0-500
CHANNEL	389	INL	PRI	ST	PR	27	FT	BRK	LOOP	ST	GEN	K	A-5 0-500
CHANNEL	390	INL	PRI	ST	PR	27	FT	BRK	LOOP	ST	GEN	J	B-9 0-500
CHANNEL	391	INL	TUBE	WALL	T/C	35	FT	BRK	LOOP	ST	GEN	76	A-5 0-500
CHANNEL	392	INL	TUBE	WALL	T/C	35	FT	BRK	LOOP	ST	GEN	75	C-4 0-500
CHANNEL	393	INL	TUBE	WALL	T/C	35	FT	BRK	LOOP	ST	GEN	33	E-4 0-500
CHANNEL	394	INL	SEC	SIDE	F-T/C	35	FT	BRK	LOOP	ST	GEN	3C	B-6 0-500
CHANNEL	395	INL	SEC	SIDE	F-T/C	35	FT	BRK	LOOP	ST	GEN	30F	D-5 0-500
CHANNEL	396	INL	SEC	SIDE	F-T/C	35	FT	BRK	LOOP	ST	GEN	40	F-6 0-500
CHANNEL	397	OUTL	PRI	ST	PR	27	FT	BRK	LOOP	ST	GEN	M	F-5 0-500
CHANNEL	398	OUTL	PRI	ST	PR	27	FT	BRK	LOOP	ST	GEN	L	E-9 0-500
CHANNEL	399	OUTL	PRI	ST	PR	27	FT	BRK	LOOP	ST	GEN	N	D-11 0-500
CHANNEL	400	OUTL	TUBE	WALL	T/C	20	FT	BRK	LOOP	ST	GEN	65	J-4 0-500
CHANNEL	401	OUTL	TUBE	WALL	T/C	20	FT	BRK	LOOP	ST	GEN	66	L-5 0-500
CHANNEL	402	OUTL	SEC	SIDE	F-T/C	20	FT	BRK	LOOP	ST	GEN	16P	G-2 0-500
CHANNEL	403	OUTL	SEC	SIDE	F-T/C	20	FT	BRK	LOOP	ST	GEN	17Q	K-5 0-500
CHANNEL	404	OUTL	PRI	ST	PR	15	FT	BRK	LOOP	ST	GEN	148	D-11 0-500
CHANNEL	405	OUTL	PRI	ST	PR	15	FT	BRK	LOOP	ST	GEN	150	E-9 0-500
CHANNEL	406	OUTL	PRI	ST	PR	15	FT	BRK	LOOP	ST	GEN	151	F-5 0-500
CHANNEL	407	OUTL	TUBE	WALL	T/C	10	FT	BRK	LOOP	ST	GEN	30	G-1 0-500
CHANNEL	408	OUTL	TUBE	WALL	T/C	10	FT	BRK	LOOP	ST	GEN	26	J-4 0-500
CHANNEL	409	OUTL	TUBE	WALL	T/C	10	FT	BRK	LOOP	ST	GEN	31	L-5 0-500
CHANNEL	410	OUTL	SEC	SIDE	F-T/C	10	FT	BRK	LOOP	ST	GEN	34I	G-2 0-500
CHANNEL	411	OUTL	SEC	SIDE	F-T/C	10	FT	BRK	LOOP	ST	GEN	31F	K-5 0-500
CHANNEL	412	OUTL	PRI	ST	PR	10	FT	BRK	LOOP	ST	GEN	165	E-9 0-500
CHANNEL	413	OUTL	PRI	ST	PR	10	FT	BRK	LOOP	ST	GEN	1163	F-5 0-500
CHANNEL	414	OUTL	PRI	ST	PR	10	FT	BRK	LOOP	ST	GEN	170	D-1 0-500
CHANNEL	415	OUTL	TUBE	WALL	T/C	6	FT	BRK	LOOP	ST	GEN	7	J-4 0-500

TABLE 6-4 (cont)

FLECHT SEASET NATURAL CIRCULATION AND

REFLUX CONDENSATION TESTS

CDAS INSTRUMENTATION LIST

CHANNEL	416	OUTL	TUBE	WALL	T/C	6	FT	BRK	LOOP	ST	GEN	8	L-5 0-500
CHANNEL	417	OUTL	SEC	SIDE	F-T/C	6	FT	BRK	LOOP	ST	GEN	39D	G-2 0-500
CHANNEL	418	OUTL	SEC	SIDE	F-T/C	6	FT	BRK	LOOP	ST	GEN	40E	K-5 0-500
CHANNEL	419	OUTL	PRI	ST	PR	6	FT	BRK	LOOP	ST	GEN	159	F-7 0-500
CHANNEL	420	OUTL	PRI	ST	PR	6	FT	BRK	LOOP	ST	GEN	154	E-3 0-500
CHANNEL	421	OUTL	TUBE	WALL	T/C	4	FT	BRK	LOOP	ST	GEN	2	G-1 0-500
CHANNEL	422	OUTL	TUBE	WALL	T/C	4	FT	BRK	LOOP	ST	GEN	50	J-4 0-500
CHANNEL	423	OUTL	TUBE	WALL	T/C	4	FT	BRK	LOOP	ST	GEN	5	L-5 0-500
CHANNEL	424	OUTL	SEC	SIDE	F-T/C	4	FT	BRK	LOOP	ST	GEN	37B	G-2 0-500
CHANNEL	425	OUTL	SEC	SIDE	F-T/C	4	FT	BRK	LOOP	ST	GEN	38C	K-5 0-500
CHANNEL	426	OUTL	PRI	ST	PR	4	FT	BRK	LOOP	ST	GEN	115	F-7 0-500
CHANNEL	427	OUTL	PRI	ST	PR	4	FT	BRK	LOOP	ST	GEN	104	E-3 0-500
CHANNEL	428	OUTL	TUBE	WALL	T/C	2	FT	BRK	LOOP	ST	GEN	61	G-1 0-500
CHANNEL	429	OUTL	TUBE	WALL	T/C	2	FT	BRK	LOOP	ST	GEN	52	J-4 0-500
CHANNEL	430	OUTL	TUBE	WALL	T/C	2	FT	BRK	LOOP	ST	GEN	74	L-5 0-500
CHANNEL	431	OUTL	SEC	SIDE	F-T/C	2	FT	BRK	LOOP	ST	GEN	36A	G-2 0-500
CHANNEL	432	OUTL	SEC	SIDE	F-T/C	2	FT	BRK	LOOP	ST	GEN	13M	K-5 0-500
CHANNEL	433	OUTL	PRI	ST	PR	2	FT	BRK	LOOP	ST	GEN	107	D-1 0-500
CHANNEL	434	OUTL	TUBE	WALL	T/C	1	FT	BRK	LOOP	ST	GEN	56	G-1 0-500
CHANNEL	435	OUTL	TUBE	WALL	T/C	1	FT	BRK	LOOP	ST	GEN	44	J-4 0-500
CHANNEL	436	OUTL	TUBE	WALL	T/C	1	FT	BRK	LOOP	ST	GEN	43	L-5 0-500
CHANNEL	437	OUTL	SEC	SIDE	F-T/C	1	FT	BRK	LOOP	ST	GEN	21U	G-2 0-500
CHANNEL	438	OUTL	SEC	SIDE	F-T/C	1	FT	BRK	LOOP	ST	GEN	12L	K-5 0-500
CHANNEL	439	OUTL	PRI	ST	PR	1	FT	BRK	LOOP	ST	GEN	109	F-7 0-500
CHANNEL	440	OUTL	PRI	ST	PR	1	FT	BRK	LOOP	ST	GEN	103	E-3 0-500
CHANNEL	441	OUTL	PRI	ST	PR	1	FT	BRK	LOOP	ST	GEN	110	D-1 0-500
CHANNEL	442	OUTL	TUBE	WALL	T/C	.25	FT	BRK	LOOP	ST	GEN	63	G-1 0-500
CHANNEL	443	OUTL	TUBE	WALL	T/C	.25	FT	BRK	LOOP	ST	GEN	47	J-4 0-500
CHANNEL	444	OUTL	TUBE	WALL	T/C	.25	FT	BRK	LOOP	ST	GEN	57	L-5 0-500
CHANNEL	445	OUTL	SEC	SIDE	F-T/C	.25	FT	BRK	LOOP	ST	GEN	22V	G-2 0-500

TABLE 6-4 (cont)

FLECHT SEASET NATURAL CIRCULATION AND

REFLUX CONDENSATION TESTS

CDAS INSTRUMENTATION LIST

CHANNEL 446	OUTL SEC SIDE	F-T/C	.25	FT	BRK LOOP	ST GEN	23W	K-5	0-500
CHANNEL 447	OUTL PRI ST	PR	2	FT	BRK LOOP	ST GEN	111	D-11	0-500
CHANNEL 448	OUTL PRI ST	PR	0	FT	BRK LOOP	ST GEN	114	E-3	0-500
CHANNEL 449	INL PLNM ST	PR			BRK LOOP	ST GEN	RANGE:0-500		
CHANNEL 450	INL PLNM WALL	T/C			BRK LOOP	ST GEN	RANGE:0-500		
CHANNEL 451	OUTL PLNM ST	PR			BRK LOOP	ST GEN	RANGE:0-500		
CHANNEL 452	OUTL PLNM WALL	T/C			BRK LOOP	ST GEN	RANGE:0-500		
CHANNEL 453	OUTL PLNM INS	T/C			BRK LOOP	ST GEN	RANGE:0-500		
CHANNEL 454	OUTL FLANGE WL	T/C			BRK LOOP	ST GEN	RANGE:0-500		
CHANNEL 455	OUTL FLAN INS	T/C			BRK LOOP	ST GEN	RANGE:0-500		
CHANNEL 456	INL FLANGE WL	T/C			BRK LOOP	ST GEN	RANGE:0-500		
CHANNEL 457	INL FLANGE INS	T/C			BRK LOOP	ST GEN	RANGE:0-500		
CHANNEL 458	FLUID	T/C			CROSSOVER LEG		RANGE:0-500		
CHANNEL 459	WALL	T/C			CROSSOVER LEG		RANGE:0-500		
CHANNEL 460	INSUL	T/C			CROSSOVER LEG		RANGE:0-500		
CHANNEL 461	FLUID	T/C			LOWER PLENUM		RANGE:0-500		
CHANNEL 462	WALL	T/C			LOWER PLENUM		RANGE:0-500		
CHANNEL 463	INSUL	T/C			LOWER PLENUM		RANGE:0-500		
CHANNEL 464	HOUSING WALL	T/C	4	FT	90 DEG		RANGE:0-500		
CHANNEL 465	HOUSING WALL	T/C	6	FT	135 DEG		RANGE:0-500		
CHANNEL 466	HOUSING WALL	T/C	9.25	FT	135 DEG		RANGE:0-500		
CHANNEL 467	HOUSING INSUL	T/C	4	FT	90 DEG		RANGE:0-500		
CHANNEL 468	HOUSING INSUL	T/C	6	FT	135 DEG		RANGE:0-500		
CHANNEL 469	HOUSING INSUL	T/C	9.25	FT	135 DEG		RANGE:0-500		
CHANNEL 470	GRD PLATE FL	T/C					RANGE:0-500		
CHANNEL 471	GRD PLATE WALL	T/C					RANGE:0-500		
CHANNEL 472	CORE PLATE FL	T/C					RANGE:0-500		
CHANNEL 473	CORE PLATE WL	T/C					RANGE:0-500		
CHANNEL 474	UP PLNM WALL	T/C	182.75#		90 DEG		RANGE:0-500		
CHANNEL 475	UP PLNM INSUL	T/C	182.75#		90 DEG		RANGE:0-500		

TABLE 6-4 (cont)

FLECHT SEASET NATURAL CIRCULATION AND REFLUX CONDENSATION TESTS CDAS INSTRUMENTATION LIST

CHANNEL 476	UP PLNM	WALL	T/C 192#	135 DEG			RANGE:0-500
CHANNEL 477	UP PLNM	INSUL	T/C 192#	135 DEG			RANGE:0-500
CHANNEL 478		FLUID	T/C 1	FT	DOWNCOMER		RANGE:0-500
CHANNEL 479		WALL	T/C 8	FT	DOWNCOMER		RANGE:0-500
CHANNEL 480		INSUL	T/C 8	FT	DOWNCOMER		RANGE:0-500
CHANNEL 481		FLUID	T/C 15.83	FT	DOWNCOMER		RANGE:0-500
CHANNEL 482		WALL	T/C 15.83	FT	DOWNCOMER		RANGE:0-500
CHANNEL 483		INSUL	T/C 15.83	FT	DOWNCOMER		RANGE:0-500
CHANNEL 484	INL FLAN	WALL	T/C UNBRK LOOP	ST GEN			RANGE:0-500
CHANNEL 485	INL FLAN	INS	T/C UNBRK LOOP	ST GEN			RANGE:0-500
CHANNEL 486	OUTL FLAN	WL	T/C UNBRK LOOP	ST GEN			RANGE:0-500
CHANNEL 487	OUTL FLAN	INS	T/C UNBRK LOOP	ST GEN			RANGE:0-500
CHANNEL 488	INJECT LINE	FL	T/C INERT GAS				RANGE:0-500
CHANNEL 489	ACCUM1	F-T/C					RANGE:0-500
CHANNEL 490	HOUSING	D/P	0-1	FT			+- 0.5 PSID
CHANNEL 491	HOUSING	D/P	1-2	FT			+- 0.5 PSID
CHANNEL 492	HOUSING	D/P	2-3	FT			+- 0.5 PSID
CHANNEL 493	HOUSING	D/P	3-4	FT			+- 0.5 PSID
CHANNEL 494	HOUSING	D/P	4-5	FT			+- 0.5 PSID
CHANNEL 495	HOUSING	D/P	5-6	FT			+- 0.5 PSID
CHANNEL 496	HOUSING	D/P	6-7	FT			+- 0.5 PSID
CHANNEL 497	HOUSING	D/P	7-8	FT			+- 0.5 PSID
CHANNEL 498	HOUSING	D/P	8-9	FT			+- 0.5 PSID
CHANNEL 499	HOUSING	D/P	9-10	FT			+- 0.5 PSID
CHANNEL 500	HOUSING	D/P	10-11	FT			+- 0.5 PSID
CHANNEL 501	HOUSING	D/P	11-12	FT			+- 0.5 PSID
CHANNEL 502	HOUSING	D/P	0-12	FT			+- 5.0 PSID
CHANNEL 503	HOUSING	D/P	144-156.75	IN			+- 1.0 PSID
CHANNEL 504	HOUSING	D/P	156.75-164.75	IN			+- 1.0 PSID

TABLE 6-4 (cont)

FLECHT SEASET NATURAL CIRCULATION AND REFLUX CONDENSATION TESTS

CDAS INSTRUMENTATION LIST

CHANNEL 505	UP PLNM	D/P 164.75-170.75 IN				+- 0.5 PSID
CHANNEL 506	UP PLNM	D/P 170.75-176.75 IN				+- 0.5 PSID
CHANNEL 507	UP PLNM	D/P 176.75-182.75 IN				+- 0.5 PSID
CHANNEL 508	UP PLNM	D/P 182.75-192 IN				+- 0.5 PSID
CHANNEL 509	UP PLNM	D/P 158.75-209 IN				+- 5.0 PSID
CHANNEL 510	DWNCOMER	D/P 0-198 IN				+-10.0 PSID
CHANNEL 511	DWNCOMER	D/P 198-TOP IN				+- 5.0 PSID
CHANNEL 512	HOT LEG	D/P	INL PLNM		UNBRK UP ST GEN	+- 2.5
CHANNEL 513	HOT LEG	D/P	HOT LEG RISE		UNBRK UP ST GEN	+- 2.5
CHANNEL 514	HOT LEG	D/P	INL PLNM		BRK UP ST GEN	+- 2.5
CHANNEL 515	HOT LEG	D/P	HOT LEG RISE		BRK UP ST GEN	+- 2.5
CHANNEL 516	INL PLNM		2IN.-TOP		UNBRK LOOP ST GEN	+- 5.0
CHANNEL 517	OUTL PLNM		2IN.-TOP		UNBRK LOOP ST GEN	+- 5.0
CHANNEL 518	INL-OUTL PLNM				UNBRK LOOP ST GEN	+- 1.0
CHANNEL 519	PRI TUBE	B-7	0-2	FT	UNBRK LOOP ST GEN	+- 1.0
CHANNEL 520	PRI TUBE	B-7	2-4	FT	UNBRK LOOP ST GEN	+- 1.0
CHANNEL 521	PRI TUBE	C-6	0-2	FT	UNBRK LOOP ST GEN	+- 1.0
CHANNEL 522	PRI TUBE	C-6	2-4	FT	UNBRK LOOP ST GEN	+- 1.0
CHANNEL 523	PRI TUBE	E-5	0-2	FT	UNBRK LOOP ST GEN	+- 1.0
CHANNEL 524	PRI TUBE	E-5	2-4	FT	UNBRK LOOP ST GEN	+- 1.0
CHANNEL 525	SEC SIDE		0-TOP	FT	UNBRK LOOP ST GEN	+- 25.0
CHANNEL 526	INL PLNM		2IN.-TOP		BRK LOOP ST GEN	+- 5.0
CHANNEL 527	OUTL PLNM		2IN.-TOP		BRK LOOP ST GEN	+- 5.0
CHANNEL 528	INL-OUTL PLNM				BRK LOOP ST GEN	+- 1.0
CHANNEL 529	PRI TUBE	B-6	0-2	FT	BRK LOOP ST GEN	+- 1.0
CHANNEL 530	PRI TUBE	B-6	2-4	FT	BRK LOOP ST GEN	+- 1.0
CHANNEL 531	SEC SIDE		0-TOP	FT	BRK LOOP ST GEN	+- 25.0
CHANNEL 532	COLD LEG OUTL-DWNCOMER				UNBRK LOOP ST GEN	+- 1.0
CHANNEL 533	UPSTRM DWNCOMER COLD LEG INJ					+- 1.0
CHANNEL 534	COLD LEG OUTL DOWNCOMER				BRK LOOP ST GEN	+- 1.0
CHANNEL 535	HOUSING-DWNCOMER		0 FT		CROSSOVER LEG	+- 1.0

TABLE 6-4 (cont)

FLECHT SEASET NATURAL CIRCULATION AND REFLUX CONDENSATION TESTS

CDAS INSTRUMENTATION LIST

CHANNEL 536	ACCUM 1 PT	RANGE:0-200 PSIA
CHANNEL 537	ACCUM 2 PT	RANGE:0-200 PSIA
CHANNEL 538	ACCUM 2 D/P	+- 10. PSID
CHANNEL 539	UP-DWNCOMER EXT D/P	+- 5.0 PSID
CHANNEL 540	ACCUM 1 12IN.-TOP D/P	+- 10. PSID
CHANNEL 541	SEC ORIF D/P UNBRK LOOP ST GEN	+- 5.0 PSID
CHANNEL 542	SEC ORIF D/P BRK LOOP ST GEN	+- 5.0 PSID
CHANNEL 543	PUMP SEAL DOWN LEG D/P UNBRK LOOP	+- 5.0 PSID
CHANNEL 544	PUMP SEAL DOWN LEG D/P BRK LOOP	+- 5.0 PSID
CHANNEL 545	UP PLNM D/P 192-210	+- 1.0 PSID
CHANNEL 546	UP PRESSURE PT	0-150 PSIA
CHANNEL 547	DOWNCOMER EXT PT DWNCOMER	0-150 PSIA
CHANNEL 548	COLD LEG INJ PT UNBRK LOOP	0-300 PSIA
CHANNEL 549	SEC PT UNBRK LOOP ST GEN	0-150 PSIA
CHANNEL 550	SEC PT BRK LOOP ST GEN	0-150 PSIA
CHANNEL 551	GAS INJ LINE PT	0-300 PSIA
CHANNEL 552	GAS INJ UNBRK HOT LEG FLOW METER	0-5000 SCCM
CHANNEL 553	GAS INJ BRK HOT LEG FLOW METER	0-1000 SCCM
CHANNEL 554	INL SEC SIDE FLOW F-T/C UNBRK LOOP ST GEN	0-500 DEG F
CHANNEL 555	OUTL SEC SIDE FLOW F-T/C UNBRK LOOP ST GEN	0-500 DEG F
CHANNEL 556	INL SEC SIDE FLOW F-T/C BRK LOOP ST GEN	0-500 DEG F
CHANNEL 557	OUTL SEC SIDE FLOW F-T/C BRK LOOP ST GEN	0-500 DEG F
CHANNEL 558	PRI A. BUNDLE POWER	RANGE:0-100 KW
CHANNEL 559	REDUNDANT BUNDLE POWER	RANGE:0-100 KW
CHANNEL 560	PRI B. BUNDLE POWER	RANGE:0-100 KW
CHANNEL 561	REDUNDANT BUNDLE POWER	RANGE:0-100 KW
CHANNEL 562	PRI C. BUNDLE POWER	RANGE:0-100 KW
CHANNEL 563	REDUNDANT BUNDLE POWER	RANGE:0-100 KW
CHANNEL 564	INJ LINE BIDIRECTIONAL	.33-2.5 GPM
CHANNEL 565	INJ LINE TURB MTR COLD LEG	2-20 GPM

TABLE 6-4 (cont)

FLECHT SEASET NATURAL CIRCULATION AND

REFLUX CONDENSATION TESTS

CDAS INSTRUMENTATION LIST

CHANNEL 566	UNBRK ST GEN SEC SIDE ORIF FLOW MIR PT	0-150 PSIA
CHANNEL 567	BRK ST GEN SEC SIDE ORIF FLOW MIR PT	0-150 PSIA
CHANNEL 568	SPARE	
CHANNEL 569	HOT LEG COND LIQ FILM ROTA UNBRK LOOP A	0-1.0 GPM
CHANNEL 570	HOT LEG COND LIQ FILM ROTA UNBRK LOOP B	0-1.0 GPM
CHANNEL 571	HOT LEG COND LIQ FILM ROTA BRK LOOP	0-1.0 GPM
CHANNEL 572	COLD LEG COND LIQ FILM ROTA UNBRK LOOP	0-1.0 GPM
CHANNEL 573	COLD LEG COND LIQ FILM ROTA BRK LOOP	0-1.0 GPM
CHANNEL 574	PUMP LP SEAL BIDIRECTIONAL UNBRK LOOP	2.5-25. GPM
CHANNEL 575	PUMP LP SEAL BIDIRECTIONAL BRK LOOP	.9-9.0 GPM
CHANNEL 576	CROSSOVER LEG BIDIRECTIONAL TURBOPROBE	2.3-230 GPM

from the loop sensors are conditioned so that the input to the analog/digital converter is a zero to 1-volt signal. These input conditioning cards are specialized for different types of sensors.

Three analog/digital converters were used simultaneously to get a system scan rate of 45 channels per second.

The CCC data logger was used for monitoring loop heatup and aiding in equipment troubleshooting. It records key facility, vessel, and fluid temperatures and displays them directly in engineering units. This makes the job of monitoring loop heatup more efficient. The CCC data logger also records millivolt data from test section and loop differential pressure cells; it thus allows the operator to keep a check on the operation and repeatability of differential pressure cells.

6-21. Multiple-Pen Stripchart Recorders

Nine Texas Instruments and two L&N stripchart recorders are used to record bundle power, selected bundle thermocouples, fluid thermocouples, rotameter and turbine meter flows, turbo-probe flows, and accumulator, housing upper plenum, downcomer, pump loop seal and steam generator level. These recorders give the loop operators and test directors immediate information concerning test progress and warning in the event of system anomalies. The stripcharts give an analog recording of critical data channels as a backup to the computer. Stripcharts are also needed during the heatup phase of the facility, when the computer is not available. Table 6-5 lists the channels associated with the strip chart recorders.

6-22. FACILITY OPERATION

A detailed procedure of how each test was conducted is given in section 7, Test Description. The procedures discussed in the following paragraphs served as guidelines which were subject to change or modification, depending on the test facility response and shakedown test results.

TABLE 6-5

FLECHT SEASET NATURAL CIRCULATION AND REFLUX CONDENSATION TESTS STRIPCHART RECORDER INSTRUMENTATION CHANNEL LIST

Component	Measurement	Channel No.
PRIMARY INSTRUMENTATION		
Pressurizer (accumulator no. 1)	Pressure	536
	Level	540
	Fluid temperature	489
	Flow (injection line bidirectional turbine meter)	564
Rod bundle	Inlet temperature (loop piping fluid T/C)	461
	Outlet temperature (ground plate fluid T/C)	470
	Inlet flow (crossover leg turbo-probe)	576
	Level (overall ΔP)	502
	Heater rod temperature 7J6-0 (zone A)	12
	Heater rod temperature 7E6-0 (zone A)	13
	Heater rod temperature 6D6-0 (zone B)	14
	Heater rod temperature 8B6-0 (zone C)	15
Rod bundle	Primary zone A	558
	Primary zone B	560
	Primary zone C	562
	Redundant zone A	559
	Redundant zone B	560
	Redundant zone C	562
Upper plenum	Pressure	546
	Level (overall ΔP)	509
Hot legs	Unbroken loop inlet temperature (steam probe T/C)	200
	Broken loop inlet temperature (steam probe T/C)	125
Unbroken loop steam generator		
--Primary side	Inlet fluid temperature	201
	Outlet fluid temperature	203
	Overall ΔP	518
	Flow (pump loop seal turbine meter)	574
--Secondary side	Inlet fluid temperature	554
	Outlet fluid temperature	555
	Pressure	549
	Level (overall ΔP)	525
	Flow (orifice ΔP)	541

TABLE 6-5 (cont)

FLECHT SEASET NATURAL CIRCULATION AND REFLUX CONDENSATION TESTS STRIPCHART RECORDER INSTRUMENTATION CHANNEL LIST

Component	Measurement	Channel No.
Broken loop steam generator		
--Primary side	Inlet fluid temperature	449
	Outlet fluid temperature	451
	Overall ΔP	528
	Flow (pump loop seal turbine meter)	575
--Secondary side	Inlet fluid temperature	556
	Outlet fluid temperature	557
	Pressure	550
	Level (overall ΔP)	531
	Flow (orifice ΔP)	542
Downcomer	Downcomer extension pressure	549
	Downcomer extension level	511
	Downcomer level	510
	Fluid temperature	478
SECONDARY INSTRUMENTATION[a]		
Accumulator no. 2 (cold leg/UHI injection)	Pressure	537
	Level	538
	Fluid temperature	321
	Flow (injection flow)	565
Noncondensible gas injection system	Pressure	551
	Fluid temperature	488
	Unbroken loop injection flow	552
	Broken loop injection flow	553
Noncondensible gas sampling system	Water flow	
	Water temperature	
	Gas analyzer output (X-Y recorder)	
Upper plenum	Upper plenum extension level	545
	Core plate fluid T/C	472
	Core plate wall T/C	473
Unbroken loop hot leg	Condensed liquid film	569
	flow (rotameters)	570

a. To be connected when needed

TABLE 6-5 (cont)

FLECHT SEASET NATURAL CIRCULATION AND REFLUX CONDENSATION TESTS STRIPCHART RECORDER INSTRUMENTATION CHANNEL LIST

Component	Measurement	Channel No.
Unbroken loop cold leg	Condensed liquid film flow (rotameter)	572
Broken loop hot leg	Condensed liquid film flow (rotameter)	571
Broken loop cold leg	Condensed liquid film flow (rotameter)	573

6-23. Instrumentation Plan

The proper choice of instrumentation is essential if meaningful results are to be obtained from an experimental or testing program. Therefore, considerable effort was expended to optimize allocation of instrumentation channels based on projected data requirements. As previously discussed (paragraph 6-17), three types of data acquisition equipment are available in the natural circulation test facility:

-- Computer Data Acquisition System (CDAS)

-- Consolidated Control Corporation (CCC) data logger

-- Stripchart recorders

Only channels connected to the CDAS are described herein. A detailed instrumentation channel listing appears in table 6-4. Other channels connected to the CCC and stripchart recorders are utilized for loop performance. Data recorded by means of the CCC and stripchart recorders are not used directly for data analysis and evaluation. The overall instrumentation description for the natural circulation test facility is given in table 6-5.

The CDAS has a total of 576 channels available for data storage. This represents an increase of 310 channels over the FLECHT-SET Phase B facility. In that test program, the steam generators did not have enough instrumentation to determine their behavior during testing. For the natural circulation tests, both steam generators were extensively instrumented with primary side fluid, tube wall, and secondary side fluid thermocouples; differential pressure cells for monitoring levels; and sampling probes for noncondensible gas measurements.

6-24. Rod Bundle Instrumentation

The rod bundle does not play an important role in the natural circulation test as compared to the reflood experiments. It is considered only as a low-power heat source, and no heat transfer data will be obtained during testing. Although the rod bundle was

extensively instrumented for reflood experiments, only few heated rod, thimble wall, and fluid thermocouples were monitored for operational and safety reasons by the CDAS, CCC, and stripchart recorders, as indicated in table 6-5.

Figure 6-20 is a cross-sectional view of the bundle showing the location of instrumented heater rods, aspirating probes, bare and heated fluid thermocouples, and thimbles instrumented with wall thermocouples. Figure 6-21 shows the instrumentation locations as a function of elevation, and in relation to the spacer grids and heater rod power steps simulating the modified cosine axial power profile built into the heater element. The CDAS monitored 32 heater cladding thermocouples, 10 bare fluid thermocouples, and 7 heated fluid thermocouples. Radial location and elevations are shown in appendix F, figures F-2 through F-16. The CCC data logger monitored 20 thimble wall thermocouples, and four heater cladding thermocouples were monitored by a TI stripchart recorder. The aspirating steam probes were not used in this test, but could have been used as fluid thermocouples if necessary.

6-25. Thimble Instrumentation

Two thimbles were instrumented with wall thermocouples, as shown in figure 6-22. The location of the T/Cs at various elevations on the two instrumented thimbles was based on the following guidelines:

-- Provide for instrumentation at the same elevation as the steam probes and heater cladding thermocouples

-- Provide for axial instrumentation in a given flow subchannel

To best satisfy these guidelines, 10 instrumented thimble thermocouple elevations were identified and are listed in table 6-6. Each instrumented thimble contained 10 thermocouples, one at each of the elevations identified in table 6-6. The relationship of the instrumented thimble thermocouple locations with respect to other bundle instrumentation, axial power profile, and grid positioning is given in figure 6-23. The data on this figure indicate that thimble thermocouples were at the same elevation as steam probes; thus the first guideline is satisfied.

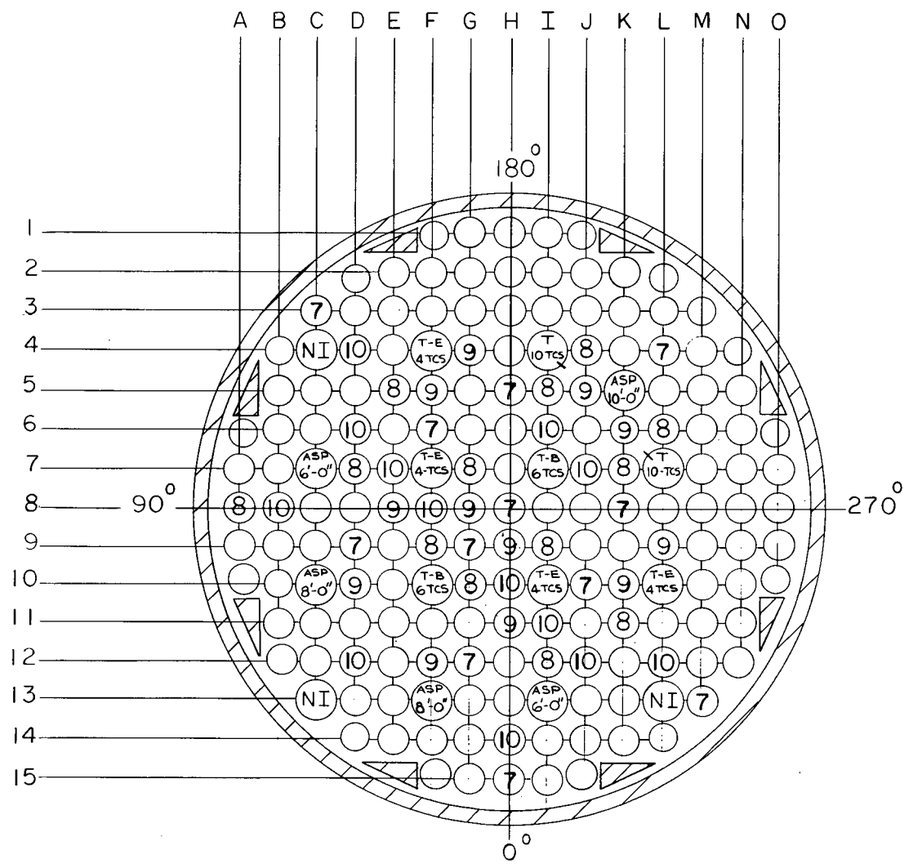

TABLE 2
INSTRUMENTED THIMBLES

ELEVATION	UNINSTRUMENTED			ASPERATED STEAM PROBES					BARE T/C		ELECTRICALLY HEATED T/C				THIMBLE WALL T/C	
	CO-ORDINATES															
FEET	4C	13C	13L	5K	10C	7C	13I	13F	7I	10F	4F	7F	10I	10L	4I	7L
DWG 1546E36 ITEM	48	48	48	50	51	49	49	51	55	56	57	58	58	59	12	12
1-0															X	X
2-0															X	X
3-3															X	X
4-0															X	X
5-0									X			X	X		X	X
5-7														X		
6-0						X	X		X	X	X	X	X		X	X
6-6																
7-0									X	X	X			X	X	X
7-6										X						
8-0					X			X	X	X	X			X	X	X
9-3									X			X	X			
10-0				X						X	X				X	X
11-0										X				X		
11-6									X			X	X			

NI = NON INSTRUMNTED
T = INSTRUMENTED THIMBLE
T-B = THIMBLE WITH BARE THERMOCOUPLES.
T-E = THIMBLE WITH ELECTRICALLY HEATED THERMOCOUPLES.
ASP = ASPIRATED STEAM PROBES.

(7) GROUP-7
(8) GROUP-8
(9) GROUP-9
(10) GROUP-10
} INSTRUMENTED HEATER ROD

Figure 6-20. FLECHT SEASET Natural Circulation Rod Bundle Instrumentation

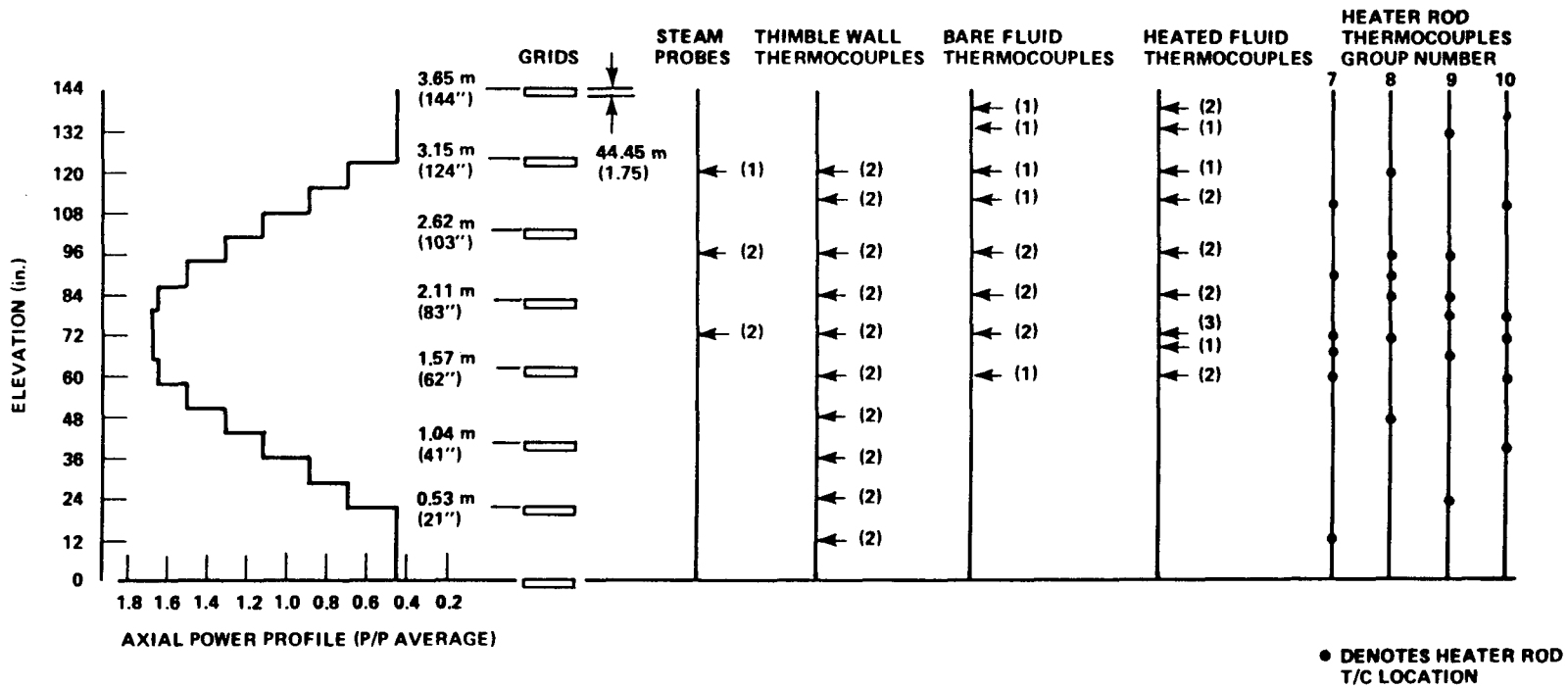

Figure 6-21. FLECHT SEASET Natural Circulation Rod Bundle Thermocouple Locations

TABLE 6-6

FLECHT-SEASET NATURAL CIRCULATION AND REFLUX CONDENSATION ELEVATION OF THERMOCOUPLES ON INSTRUMENTED THIMBLES

Elevation [m (in.)]	Total	Thimble	
		4-I	7-L
0.30 (12)	2	1	1
0.61 (24)	2	1	1
0.99 (39)	2	1	1
1.22 (48)	2	1	1
1.52 (60)	2	1	1
1.83 (72)	2	1	1
2.13 (84)	2	1	1
2.44 (96)	2	1	1
2.82 (111)	2	1	1
3.05 (120)	2	1	1

TABLE 6-7

FLECHT SEASET NATURAL CIRCULATION AND REFLUX CONDENSATION TESTS AZIMUTHAL ORIENTATION OF INSTRUMENTED THIMBLE THERMOCOUPLES

Thimble Grid Location	Thermocouple Azimuth
4-I	315°
7-L	135°

20616-81

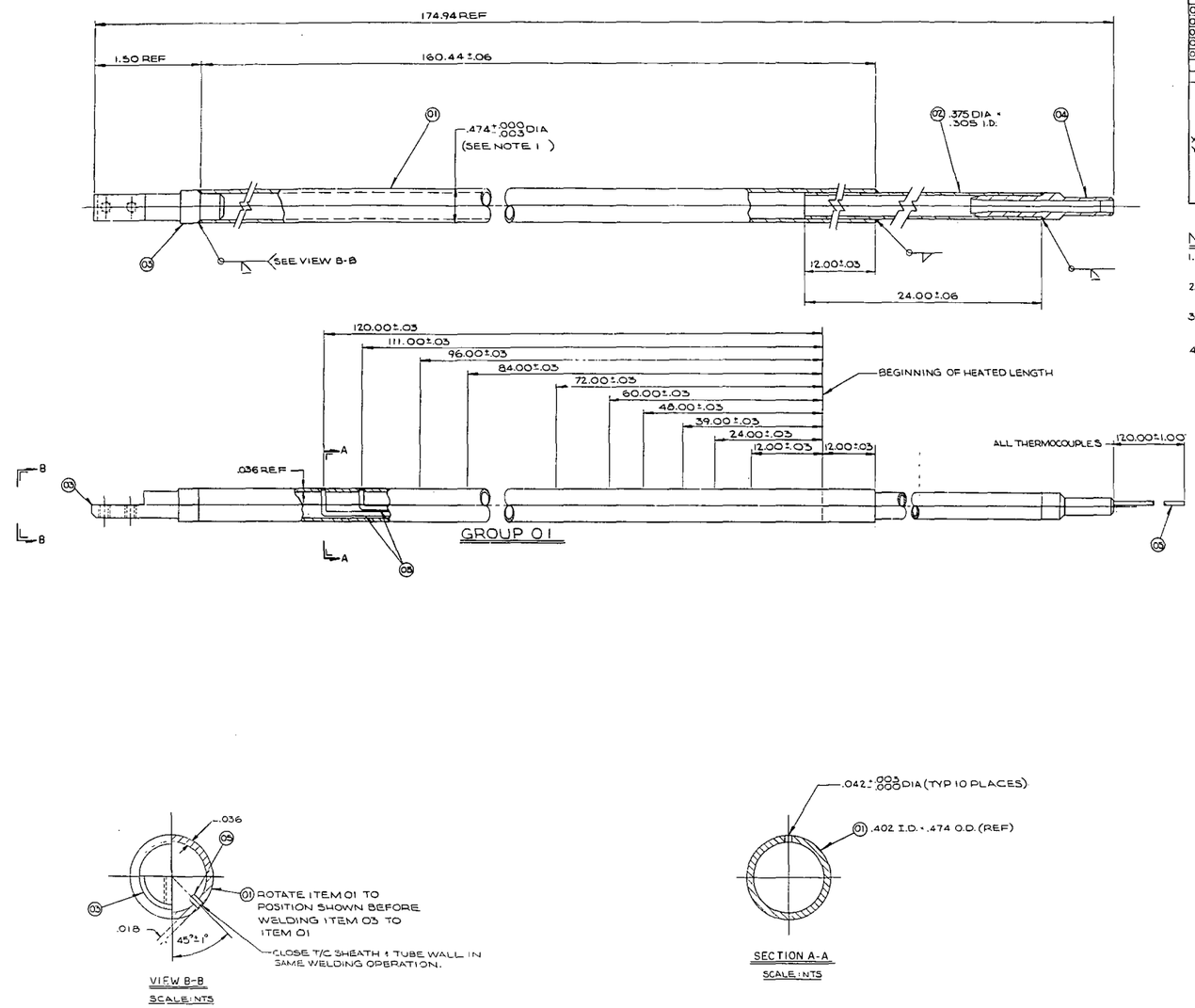

BILL OF MATERIAL

ITEM	SYM	PART NAME	DRAWING & NO. OR ST.	MATERIAL	NO. PER GROUP 01	02	03	04
01		TUBE		SEE NOTE-X	1	1	–	–
02		TUBE		SEE NOTE-X	1	1	–	–
03		END SUPPORT	616E32-H02		–	1	–	–
04		BOTTOM END PLUG	616E32-H07		–	1	–	–
05	Y	THERMOCOUPLE			10	–	–	–

X - ASTM A213 TYPE 304
Y - .040 O.D. × 22' LG SST SHEATH, TYPE "K" MAGNESIUM OXIDE INSULATION. UNGROUNDED JUNCTION. COLD END STRIPPED & SEALED.

NOTES:

1. MAKE FROM .500 O.D. × .049 WALL SST TUBING. CENTERLESS GRIND O.D. TO .474 +.000 -.003 DIA.
2. WELD PER W.P.S. 82127-XG AND DYE PENETRANT CHECK PER W.P.S. RD-TE-70-612.
3. POLISH TUBE SURFACE SMOOTH AFTER THERMOCOUPLES ARE INSTALLED.
4. LABEL ALL LEADS WITH IDENTIFICATION. REFERRING TO ITS ELEVATION IN THE TUBE.

Figure 6-22. FLECHT SEASET Natural Circulation Instrumented Thimbles

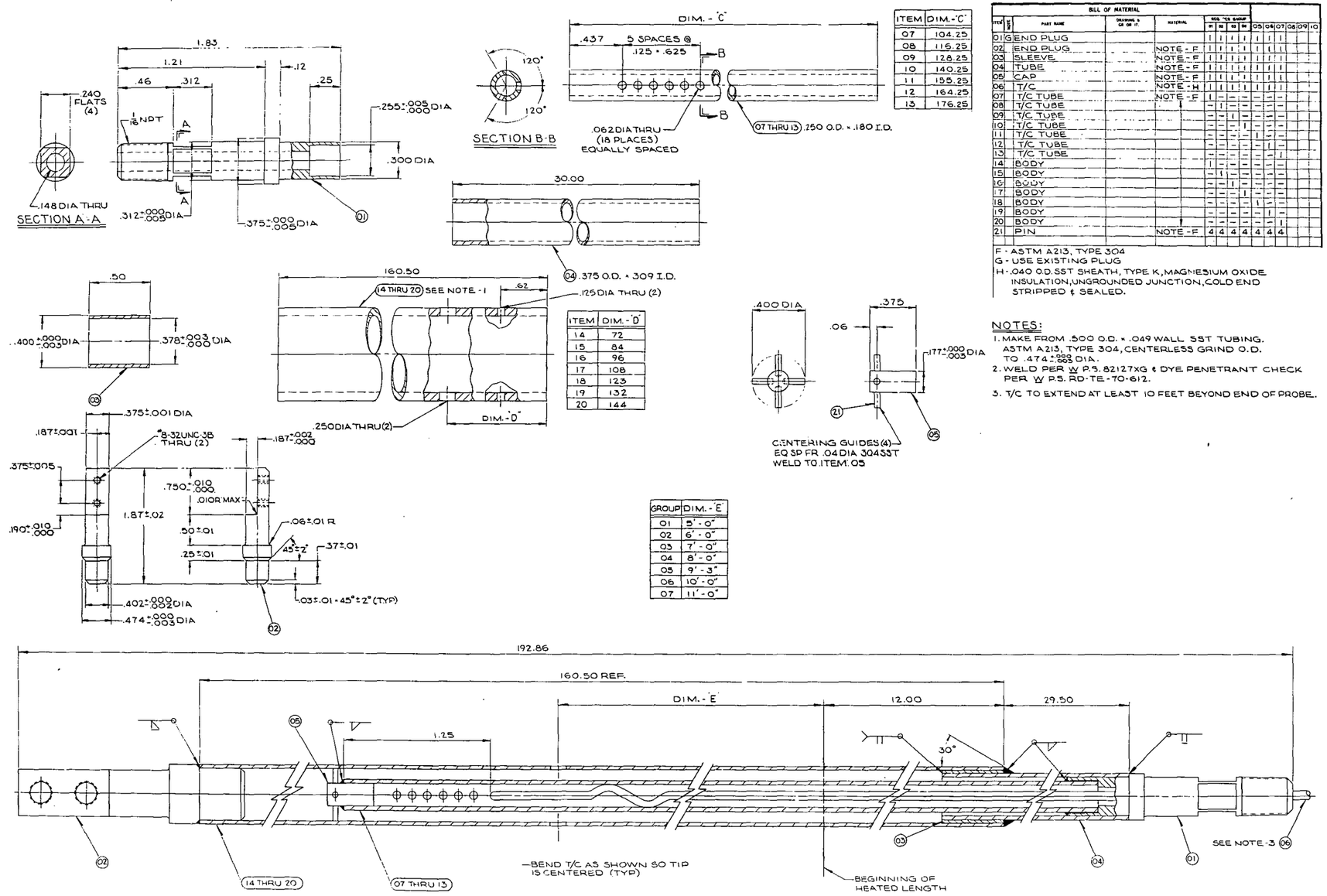

ITEM	DIM. - "C"
07	104.25
08	116.25
09	128.25
10	140.25
11	155.25
12	164.25
13	176.25

ITEM	DIM. - "D"
14	72
15	84
16	96
17	108
18	123
19	132
20	144

GROUP	DIM. - "E"
01	5' - 0"
02	6' - 0"
03	7' - 0"
04	8' - 0"
05	9' - 3"
06	10' - 0"
07	11' - 0"

BILL OF MATERIAL

ITEM	REQ	PART NAME	DRAWING & GR OR IT	MATERIAL	REQ. "CS" GROUP 01	02	03	04	05	06	07	08	09	10
01	G	END PLUG			I	I	I	I	I	I	I			
02		END PLUG		NOTE - F	I	I	I	I	I	I	I			
03		SLEEVE		NOTE - F	I	I	I	I	I	I	I			
04		TUBE		NOTE - F	I	I	I	I	I	I	I			
05		CAP		NOTE - F	I	I	I	I	I	I	I			
06		T/C		NOTE - H	I	I	I	I	I	I	I			
07		T/C TUBE		NOTE - F	I	–	–	–	–	–	–			
08		T/C TUBE			–	I	–	–	–	–	–			
09		T/C TUBE			–	–	I	–	–	–	–			
10		T/C TUBE			–	–	–	I	–	–	–			
11		T/C TUBE			–	–	–	–	I	–	–			
12		T/C TUBE			–	–	–	–	–	I	–			
13		T/C TUBE			–	–	–	–	–	–	I			
14		BODY			–	I	–	–	–	–	–			
15		BODY			–	–	I	–	–	–	–			
16		BODY			–	–	–	I	–	–	–			
17		BODY			–	–	–	–	I	–	–			
18		BODY			–	–	–	–	–	I	–			
19		BODY			–	–	–	–	–	–	I			
20		BODY			–	–	–	–	–	–	–	I		
21		PIN		NOTE - F	4	4	4	4	4	4	4			

F - ASTM A213, TYPE 304
G - USE EXISTING PLUG
H - .040 O.D. SST SHEATH, TYPE K, MAGNESIUM OXIDE INSULATION, UNGROUNDED JUNCTION, COLD END STRIPPED & SEALED.

NOTES:

1. MAKE FROM .500 O.D. × .049 WALL SST TUBING. ASTM A213, TYPE 304, CENTERLESS GRIND O.D. TO .474 $^{+.000}_{-.003}$ DIA.
2. WELD PER W P.S. 82127XG & DYE PENETRANT CHECK PER W P.S. RD-TE-70-612.
3. T/C TO EXTEND AT LEAST 10 FEET BEYOND END OF PROBE.

Figure 6-23. FLECHT SEASET Natural Circulation Rod Bundle Aspirating Steam Probe

Figure 6-20 shows that the two instrumented thimbles were located at grid coordinates 4-1 and 7-L. The thimble thermocouples were located at the azimuthal locations identified in table 6-7. As all 10 thermocouples on a given thimble were located at a given azimuth, the second guideline identified above is satisfied.

6-26. Steam Probe Instrumentation

Steam probes are used to measure vapor superheat during reflood experiments. However, during natural circulation tests, the rod bundle was covered with liquid and no vapor superheat was expected. Consequently, the steam probes were used to measure water temperatures only. If the bundle had uncovered, some steam superheat could have been measured. There are three types of steam probe instrumentation in the bundle:

-- Aspirating steam probes

-- Bare thermocouples

-- Electrically heated thermocouples

Steam probe locations in the bundle are shown in figure 6-20. The aspirating steam probe design (figure 6-23) consisted of a thermocouple inside a 6.4 mm (0.125 in.) diameter tube, which in turn was centrally located inside the bundle thimble. The thimble wall had two holes set 180 degrees apart at elevations where steam temperature was measured. This type of steam probe only works when a highly droplet-dispersed flow is present. The steam/droplet mixture is forced by the bundle internal pressure through the thimble wall holes and follows a tortuous path before entering the center tube where the water droplets are separated. The steam passes around the thermocouple and is exhausted to atmosphere. The exhausted steam is collected in a container with ice, where it is condensed and its mass is determined by weighing the container before and after the steam is collected. During the natural circulation tests, neither steam nor water was aspirated through the probes. The thermocouple was in stagnant water inside the thimble.

The bare and electrically heated steam probes had the same design, as shown in figures 6-24 and 6-25, except for the number of thermocouples in each thimble. Their locations

in the bundle, the number of thermocouples per thimble, and the elevations are shown in table 2 of figure 6-20. In this design, the sheathed (304 stainless steel) thermocouples are centered in scalloped sections of the thimble wall at various elevations.

The thimble scalloped wall section serves as a shield or baffle to prevent water droplets from wetting the thermocouple prematurely. The difference between a bare and a heated thermocouple is that in the latter a small electrical current is passed through the thermocouple to heat it to temperatures above saturation in order to evaporate any droplets which might wet it. Again, this scheme would have been employed in reflood experiments, but for the natural circulation tests the thermocouples were not electrically heated. Both types of steam probes were used to measure water temperature in the bundle. There were 10 bare thermocouples and 7 heated thermocouples connected to the data acquisition system (table 6-4).

6-27. Power Measurements

Six instrumentation channels are devoted to measurement of power into the bundle heater rods. Three are used as a primary measurement from which power is controlled by the computer software. Three independent power measurements were used for data reduction purposes. Power input to the bundle heater rods was measured by dual watts/rms, volts/rms, and amps/rms transducers. These two transducer systems produce a dc output proportional to the power input. The voltage and current inputs to the watts transducer are scaled down by transformers so that the range of the watts transducer matches the bundle power. The scaling factor of the transformers was accounted for when the raw data (millivolts) are converted to engineering units.

6-28. Housing Instrumentation

The housing is equipped with wall and insulation thermocouples to compute housing heat reserve as part of the overall mass and energy balance. These thermocouples were monitored by the computer as listed in table 6-4. Axial and radial locations of these thermocouples are shown in figure 6-19. The housing instrument ring has a fluid thermocouple located above the ground plate. It will measure the rod bundle bulk outlet temperature. This thermocouple was monitored by the CDAS and by a TI stripchart

GROUP	DIM. - A	DIM. - B	DIM. - C	DIM. - D	DIM. - E	DIM. - F	DIM. - G	DIM. - H	DIM. - J	DIM. - K	DIM. - L	DIM. - M	DIM. - N
01	5'-10.778"	5'-0"	9.554"	6'-0"	9.554"	7'-0"	9.554"	8'-0"	12.554"	9'-3"	24.554"	11'-6"	9.278"
02	6'-10.778"	6'-0"	9.554"	7'-0"	3.554"	7'-6"	3.554"	8'-0"	21.554"	10'-0"	9.554"	11'-0"	15.278"

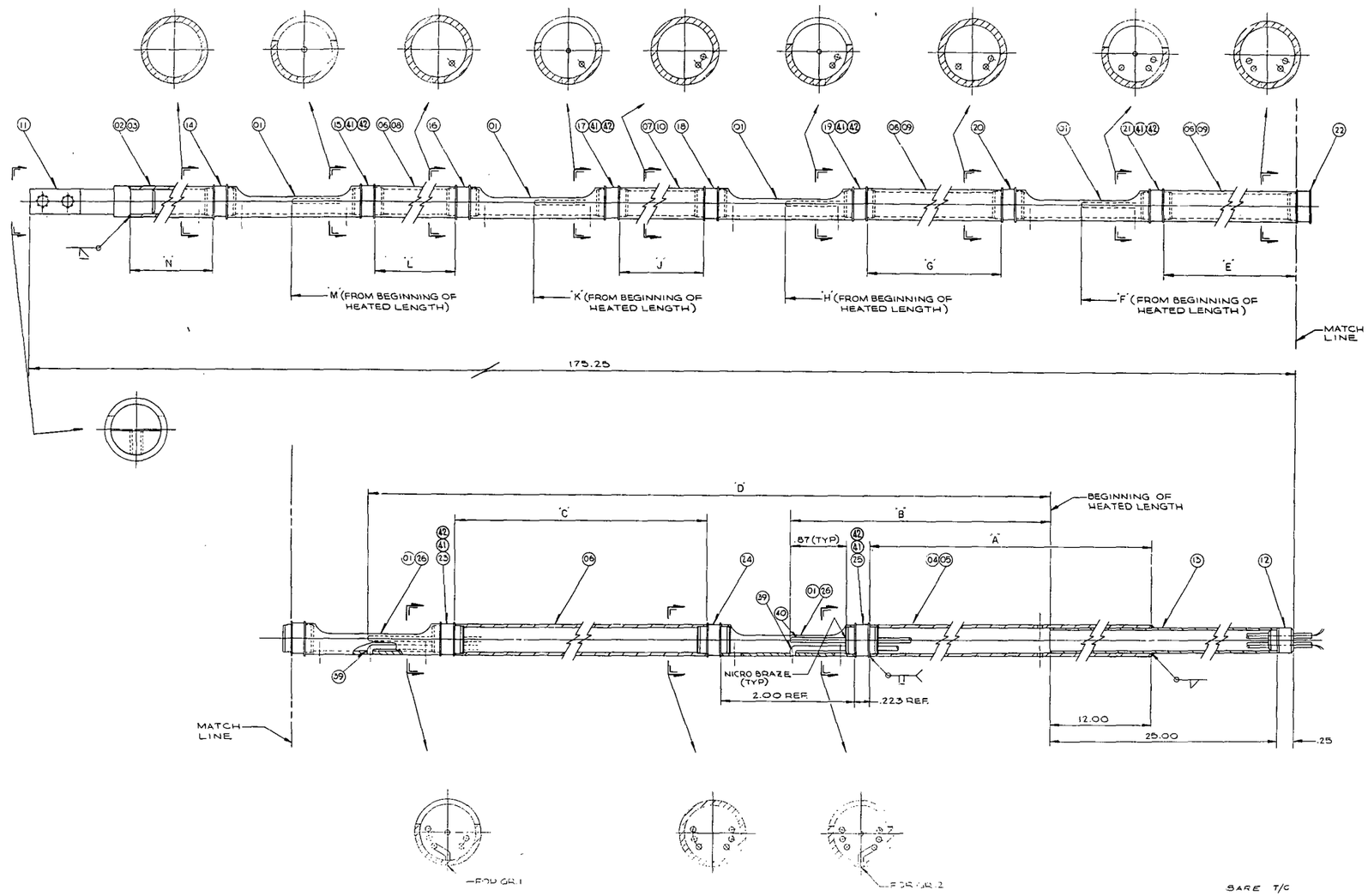

Figure 6-24. FLECHT SEASET Natural Circulation Rod Bundle Bare Thermocouple Steam Probe

GROUP	DIM.-'A'	DIM.-'B'	DIM.-'C'	DIM.-'D'	DIM.-'E'	DIM.-'F'	DIM.-'G'	DIM.-'H'	DIM.-'J'
03	6'-10.778"	6'-0"	9.554"	7'-0"	9.554"	8'-0"	21.554"	10'-0"	27.278"
04	5'-10.778"	5'-0"	9.554"	6'-0"	36.554"	9'-3"	24.554"	11'-6"	9.278"
05	6'-5.778"	5'-7"	14.554"	7'-0"	9.554"	8'-0"	33.554"	11'-0"	15.278"

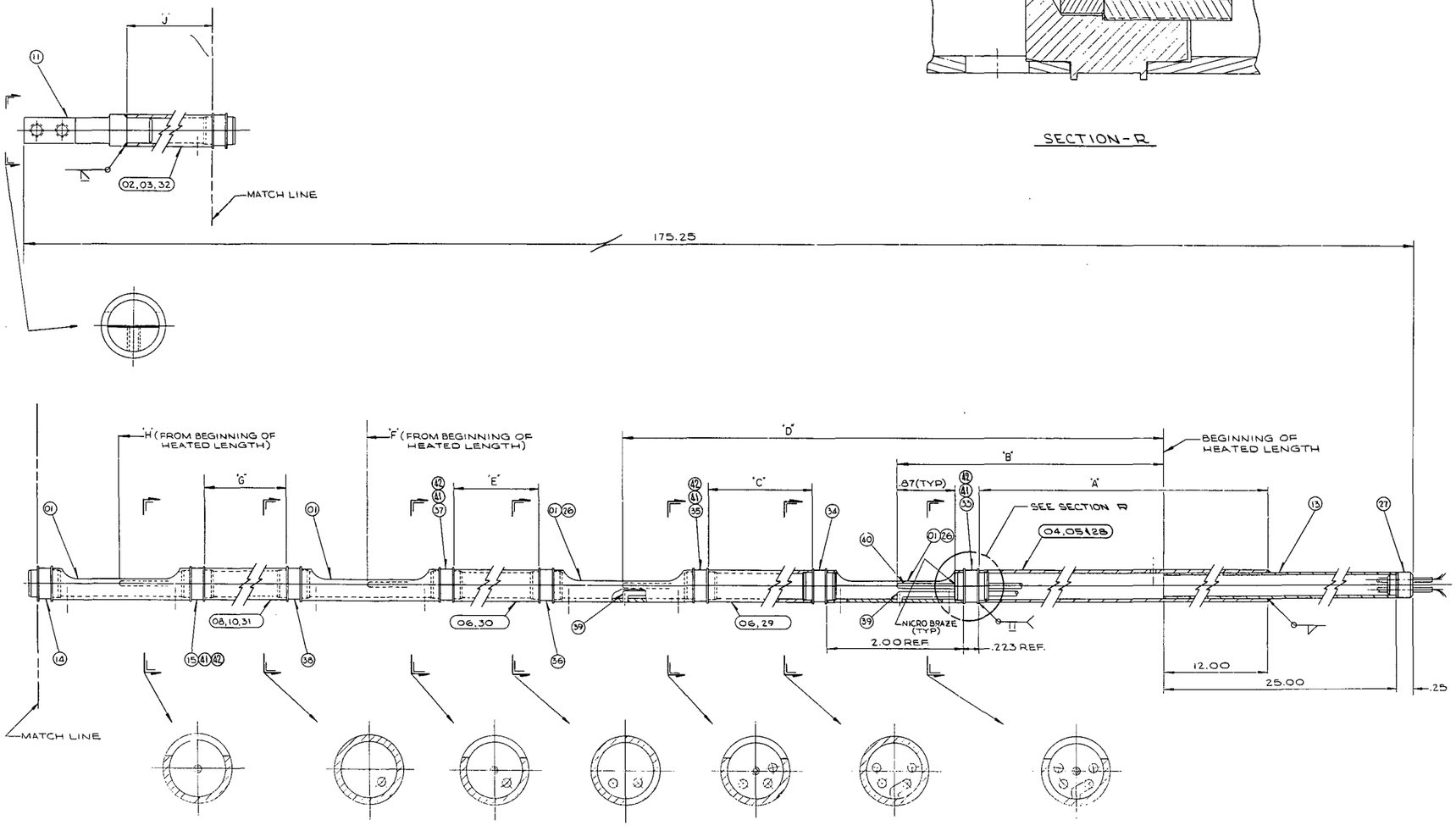

Figure 6-25. FLECHT SEASET Natural Circulation Rod Bundle Heated Thermocouple Steam Probe

recorder located in the facility control panel. The instrument ring has also a wall thermocouple and a pressure tap for differential pressure measurements across the ground plate and upper core plate. Locations of these instruments are shown in figure 6-19 and the CDAS channel numbers are listed in table 6-4.

The housing is also equipped with pressure taps every 0.30 m (12 in.) on each side (180 degrees apart) starting at the 0 m (0 in.) elevation, the beginning of the rod bundle heated length. Differential pressure cells are connected to the pressure taps to provide 12 axial readings which are used to compute mass storage and frictional losses in the rod bundle. In addition, there is an overall differential pressure cell connected between the 0 and 3.66 m (0 and 144 in.) elevations, and another cell connected across the rod bundle ground plate between the 3.66 m (144 in.) and the 4.02 m (158.4 in.) elevations.

6-29. Lower Plenum Instrumentation

The lower plenum is instrumented with a fluid thermocouple located close to the rod bundle inlet to measure bundle inlet temperatures. This was a key measurement in the natural circulation tests, because it was employed to control the steam generator secondary side flows to maintain the constant inlet rod bundle temperature. This thermocouple was connected to the CDAS, and to a TI stripchart recorder located in the test facility control panel. The lower plenum is also instrumented with wall and insulation thermocouples to determine heat losses. All these measurements, fluid, wall, and insulation temperatures, will be used in calculating the system mass and energy balance. The locations of these instruments are shown in figure 6-19 and their corresponding CDAS instrument channel numbers are listed in table 6-4.

6-30. Upper Plenum Instrumentation

The upper plenum is instrumented with six differential pressure cells to measure axial pressure drops and level at the following elevations: 3.96 to 4.18 m (13 to 13.73 ft) across the simulator upper core plate; 4.18, 4.34, 4.49, 4.64, and 4.88 m (13.73, 14.23, 14.73, 15.23, and 16.0 ft); and an overall level from 4.18 to 5.31 m (13.73 to 17.42 ft.). These measurements will be used to calculate mass storage in the upper plenum, and to monitor the upper plenum level during the reflux condensation cooling mode. A pressure

transmitter monitored the upper plenum static pressure. This transmitter is connected to the pressure tap at the 5.31 m (17.42 ft) elevation.

Upper plenum inlet fluid temperature is monitored by a thermocouple located at the bottom tip of an upper plenum column. Its hot junction is directly above the upper core plate. Wall temperatures are monitored at these elevations: the first at 4.18 m (13.73 ft) corresponding to the upper core plate, the second at 4.64 m (15.23 ft) and at an azimuthal location of 90 degrees, and the third at 4.88 m (16.0 ft) and at an azimuthal location of 135 degrees. Insulation temperatures are measured at the same elevations, corresponding to wall temperatures located at 4.64 and 4.88 m (15.23 and 16.0 ft). The upper plenum outlet fluid temperatures are determined by thermocouples located in the centerline of the unbroken and broken loop outlet nozzles shown in figure 6-19 as steam probes (channels 125 and 200).

In addition, the upper plenum vessel has two 7.6 cm (3 in.) diameter windows whose centerlines are located at the 4.88 m (16.0 ft) elevation and at azimuthal locations of 69 and 213 degrees, as shown in figure 6-7. Penetrations for light sources are at the 4.98 m (16.33 ft) elevation. These windows allow visual examination, optical probe monitoring (if available), and motion pictures of flow regimes in the upper plenum, mainly during two-phase and reflux condensation cooling modes.

6-31. Hot Leg Instrumentation

The hot legs are instrumented with fluid, wall, and insulation thermocouples. Their locations, shown in figure 6-19 are designated as stations (St. No. xx), which indicate approximately their location along the length of the hot leg piping. Most of these stations have top and bottom fluid, wall, and insulation thermocouples. However, not all of these thermocouples are connected to the CDAS because of the limited number of channels available. Table 6-3 shows the total number of thermocouples used, and table 6-4 lists their corresponding CDAS channels. The top fluid thermocouples are 304 stainless steel sheathed, type K (Chromel-Alumel) with ungrounded junctions, having an overall diameter of 1.58 mm (0.0625 in.). They are inserted about one-third of the pipe diameter through fittings at the top of the hot leg pipes. The bottom fluid thermocouples are also of the same type, but are only 0.51 mm (0.020 in.) in overall

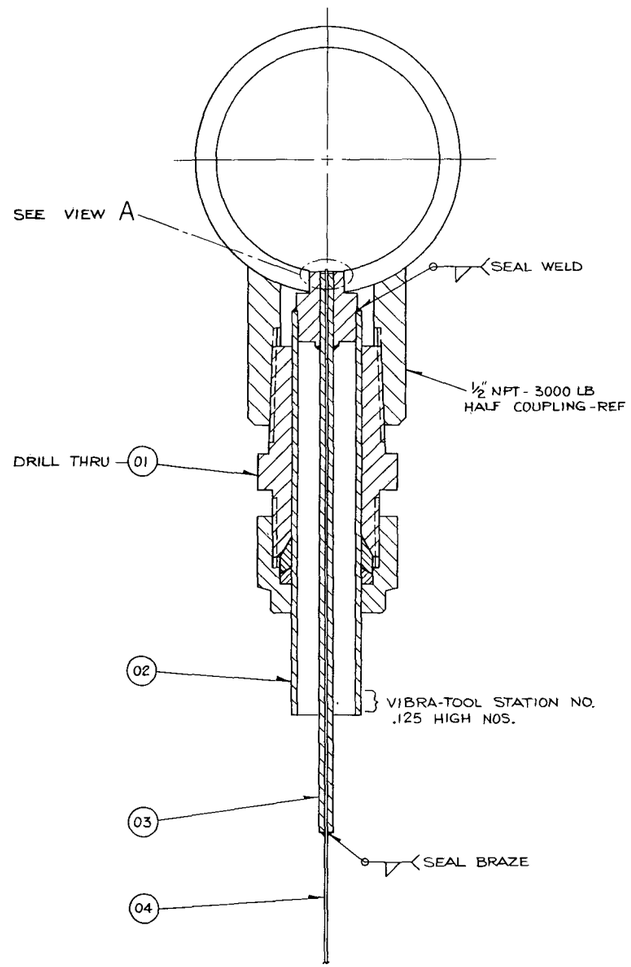

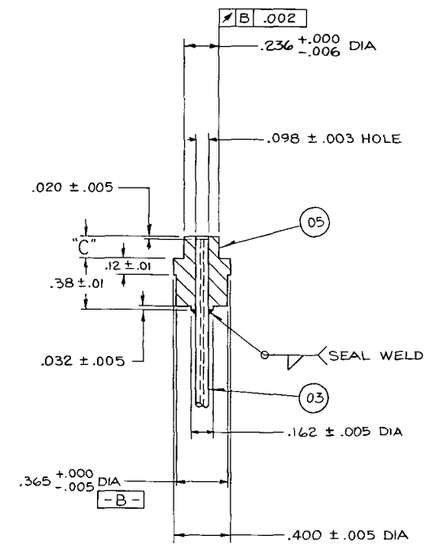

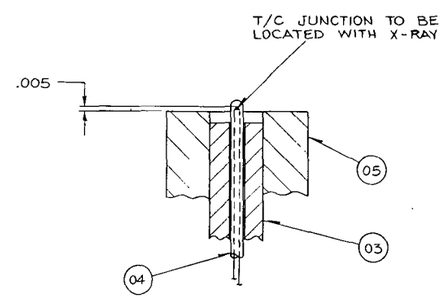

VIEW A

SCALE 8:1

BILL OF MATERIAL						IDENT CLASS →			
						GROUP NOTE →			
ITEM	NOTE	IDENT	PART NAME	(SIZE) REFERENCE INFORMATION	DEF	MATL SIZE CODE PART NUMBER OR REF DWG	REQD G01		
01	D		MALE CONN.	.500 TUBE x 1/2 NPT (DRILL THRU)		SS-810-1-8	1		
02			TUBE	.500 O.D. x .035 W. x 3.00 LG 304 SST			1		
03			TUBE	.093 O.D. x .024 I.D. x 4.50 LG 347 SST			1		
04			THERMOCOUPLE	.020 DIA CHROMEL-ALUMEL TYPE A			1		
05			ADAPTER	FR .437 DIA BAR 347 SST			1		

D - PGH VALVE & FITTING CO. PGH, PA.

STATION NO.	"C" DIM. ± .002
1	.263
2	.284
3	.281
4	.280
5	.269
6	.276
7	.273
8	.266
9	.254
10	.248
27	.218
28	.231
29	.234
30	.234
31	.233
32	.211
33	.223
34	.225
35	.231
26	.300

STATION NO.	"C" DIM. ± .002
25	.291
24	.296
23	.305
22	.311
21	.315
20	.305
19	.308
48	.158
47	.164
46	.162
45	.168
44	.168
43	.142
42	.141
41	.147
16	.300
17	.299
18	.277

Figure 6-26. FLECHT SEASET Natural Circulation Hot and Cold Leg Fluid Thermocouple Support Fixture

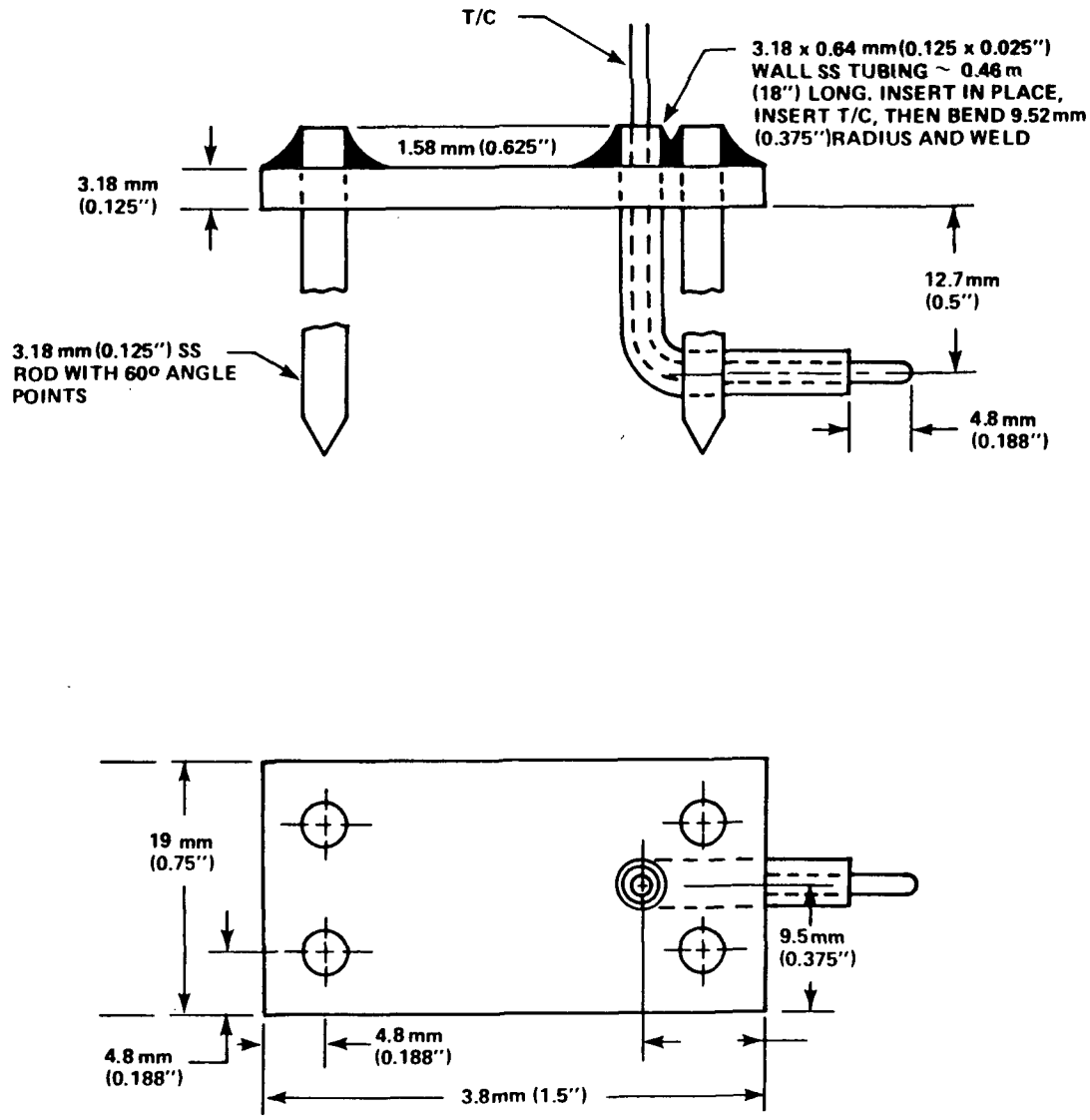

Figure 6-27. FLECHT SEASET Natural Circulation Insulation Thermocouple Support Fixture

diameter. These thermocouples were inserted through fittings at the bottom of the pipe and supported with special support fixtures (figure 6-26). They were inserted about 0.51 mm (0.020 inches) above the bottom of the pipe to ensure that the thermocouple junction was far enough away from the pipe wall to accurately measure the temperature of the condensed liquid film flowing countercurrently toward the upper plenum during the reflux condensation cooling mode tests.

It was expected that this condensed liquid film might be slightly subcooled flowing out of the steam generators, and might be slowly heated by the steam flowing in the opposite direction. The insulation thermocouples were installed just below the insulation cover by means of a special support fixture (figure 6-27), which maintained the thermocouple at a fixed distance from the pipe wall. Insulation temperatures, in conjunction with pipe wall and fluid temperatures, will be employed to calculate heat losses, and mass and energy balances. The wall thermocouples were also connected to the CCC data logger to monitor pipe temperatures during heatup.

The hot legs are also instrumented with differential pressure cells connected from a pressure tap at the bottom of the pipe to the bottom of the steam generator inlet plenum (figure 6-19), to determine mass storage or accumulation in the hot leg riser. This hot leg section has a long-radius bend and an inclined pipe section connected to the steam generator inlet plenum nozzle, as shown in figure 6-2, elevation view. The hot legs are also instrumented with rotameters to measure the flow of the condensed liquid film flowing countercurrently from the steam generators to the upper plenum during the reflux condensation cooling mode. Figure 6-19 shows the location and flow schematic diagram for these rotameters. The liquid film is drained through a nozzle at bottom of the pipes, flows through the rotameters, and is returned to the bottom of the plenum just above the upper core plate.

A weir is inserted between the flanges downstream of the drain, which prevents the condensed liquid film from flowing back to the upper plenum. The rotameters have a range of from 0.63×10^{-5} to $6.3 \times 10^{-5} m^3/sec$ (0.1 to 1.0 gal/min). The unbroken loop hot leg system has two rotameters connected in parallel in order to measure flows above $6.3 \times 10^{-5} m^3/sec$ (1.0 gal/min). The rotameters have an electronic transmitter whose signal is monitored by CDAS channels 569 through 573, as indicated in table 6-4.

20616-53

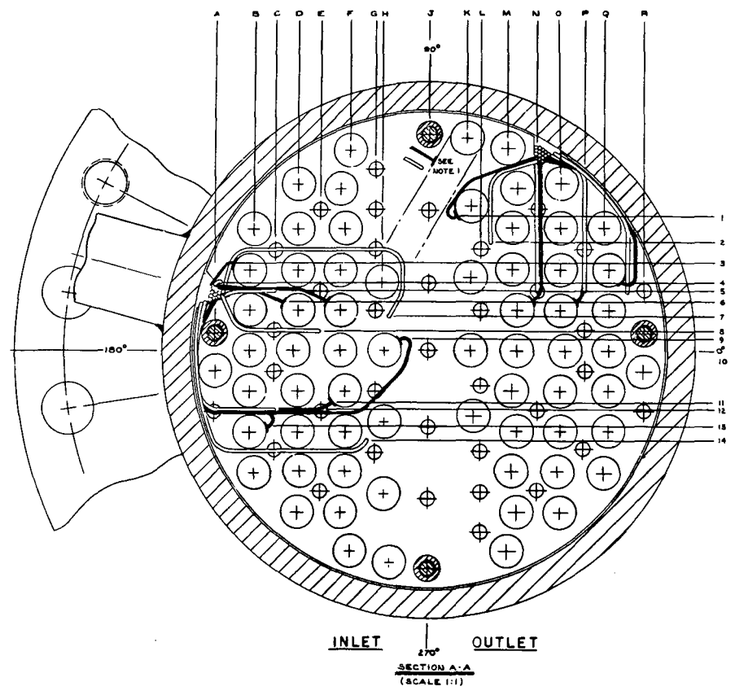

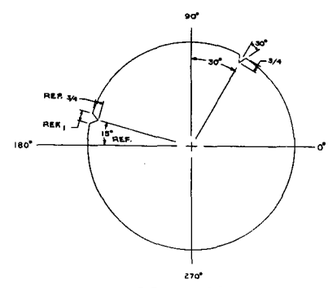

DETAIL "A"

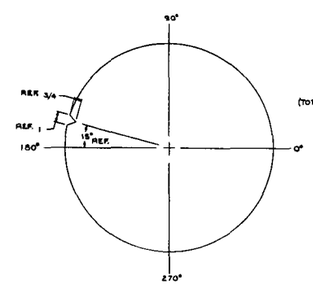

DETAIL "B"

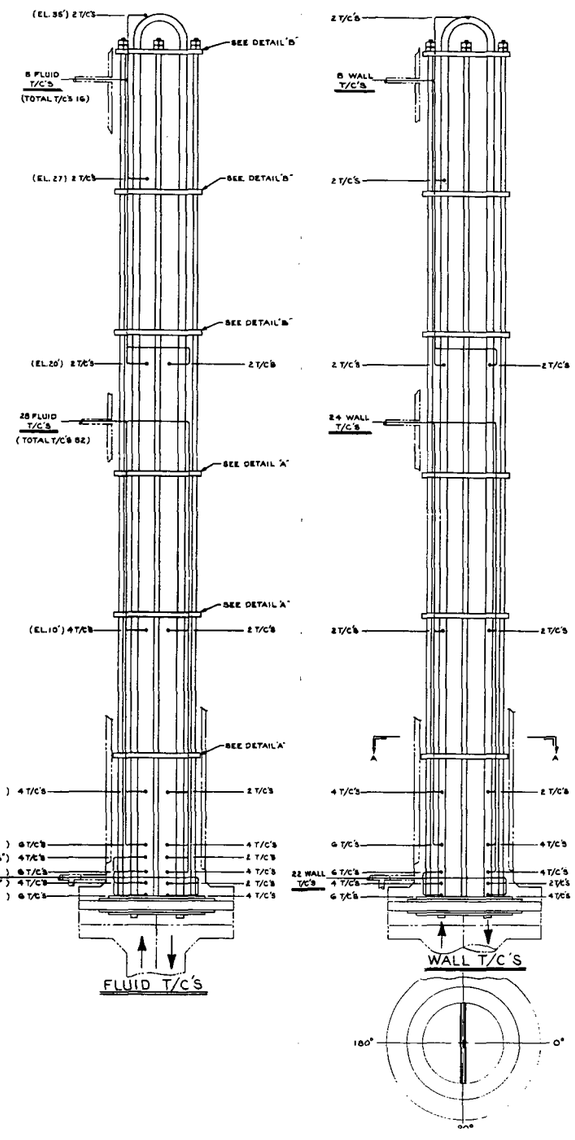

FLUID T/C NO.	CO-ORDINATES	ELEV.	T/C ELEV AS BUILT
1	A - 4	0'	3/8"
2		6"	5 13/16"
3		1'	11 13/16"
4		1'-6"	1'-6"
5		2'	2'-1/8"
6		4'	3'-11 9/16"
7		10'	10'-1/8"
8	C - 8	0'	5/16"
9		6"	5 13/16"
10		1'	12 1/8"
11		1'-6"	1'-6"
12		2'	2'-1/8"
13		4'	3'-11 9/16"
14		10'	10'-1/8"
15		20'	19'-11 1/16"
16		27'	27' *
17		38'	38' *
18	C - 12	0'	11/32"
19	BACK UP	1'	1'
20		2'	2'-1/16"
21	E - 8	0'	1/4 *
22		6"	5 1/8"
23		1'	1'
24		1'-6"	1'-6 3/8"
25		2'	2'
26		4'	3'-11 9/16" *
27		10'	10'-1/8"
28	G - 14	0'	1/4" *
29	BACK UP	1'	11 3/4" *
30		2'	1'-11 3/4" *
31	H - 7	0'	1/4" *
32		6"	6 3/4"
33		1'	1'-3/4"
34		1'-6"	1'-6 3/4"
35		2'	2'-5/8"
36		4'	3'-11 13/16"
37		10'	10'-1/8"
38		20'	20'-1/4"
39		27'	27' *
40	NOTE 1	38'	38' *
41	L - 2	0'	7/16"
42		6"	6 5/8"
43		1'	1'-11 3/8"
44		1'-6"	1'-5 11/16"
45		2'	1'-11 9/16"
46		4'	4'
47		10'	10'-7/16"
48		20'	20'-1/4"
49	N - 5	0'	1/4"
50		1'	1'-11 1/16"
51		2'	1'-11 7/8"
52	P - 5	0'	1/4"
53	BACK UP	1'	1' 11 1/16"
54		2'	2' 11/16"
55	R - 5	0'	11/32"
56		6"	6 9/32"
57		1'	1'-1/16"
58		1'-6"	1'-5 15/16"
59		2'	2'
60		4'	4'-1/16"
61		10'	10'-7/16"
62		20'	20'-1/4"

WALL T/C NO.	CO-ORDINATES	ELEV.	T/C ELEV AS BUILT
101	B - 3	0'	1/4"
102		6"	5 3/4"
103		1'	11 7/8"
104		2'	2'-1/8"
105		4'	3' 11 3/16"
106		10'	10'-1/8"
107		20'	19'-11 3/16"
108		27'	27' *
109		38'	38' *
110	B - 13	0'	0' *
111	BACKUP	1'	1' *
112		2'	2' *
113	D - 6	0'	1/32"
114		6"	6 1/16"
115		1'	1'-1/8"
116		2'	2'-1/8"
117		4'	3'-11 3/16"
118	F - 6	0'	0' *
119		6"	6"
120		1'	1'
121		2'	2'
122		4'	3'-11 7/16"
123	F - 11	0'	0' *
124	BACKUP	1'	1' *
125		2'	2' *
126	H - 9	0'	0' *
127		6"	6 3/4"
128		1'	1'-3/4"
129		2'	2'-5/8"
130		4'	3'-11 3/16"
131		10'	10'-1/8"
132		20'	20'-1/4"
133		27'	27' *
134	NOTE 1	38'	38' *
135	K - 1	0'	1/8"
136	BACKUP	1'	1'-5/16"
137		2'	1'-11 9/16"
138	M - 8	0'	0' *
139		6"	5 3/8"
140		1'	1'-1/2"
141		2'	2'-3/4"
142		4'	4' *
143		10'	10'-3/16"
144		20'	20' *
145	O - 6	0'	1/8"
146	BACKUP	1'	1'-3/16"
147		2'	2'-3/16"
148	Q - 4	0'	11/32"
149		6"	6 1/8"
150		1'	1'-3/16"
151		2'	2'-5/16"
152		4'	4'-1/8"
153		10'	10'-1/8"
154		20'	20'-3/16"

* ACCURATE ELEVATION MEASUREMENTS WERE NOT OBTAINED AT THESE LOCATIONS.

NOTE:
1. W-T/C #134 & F-T/C #40 LOCATION. (SEE SEC. A-A)

Figure 6-28. FLECHT SEASET Natural Circulation Unbroken Loop Steam Generator Instrumentation Fluid and Tube Wall Thermocouples

20616-2

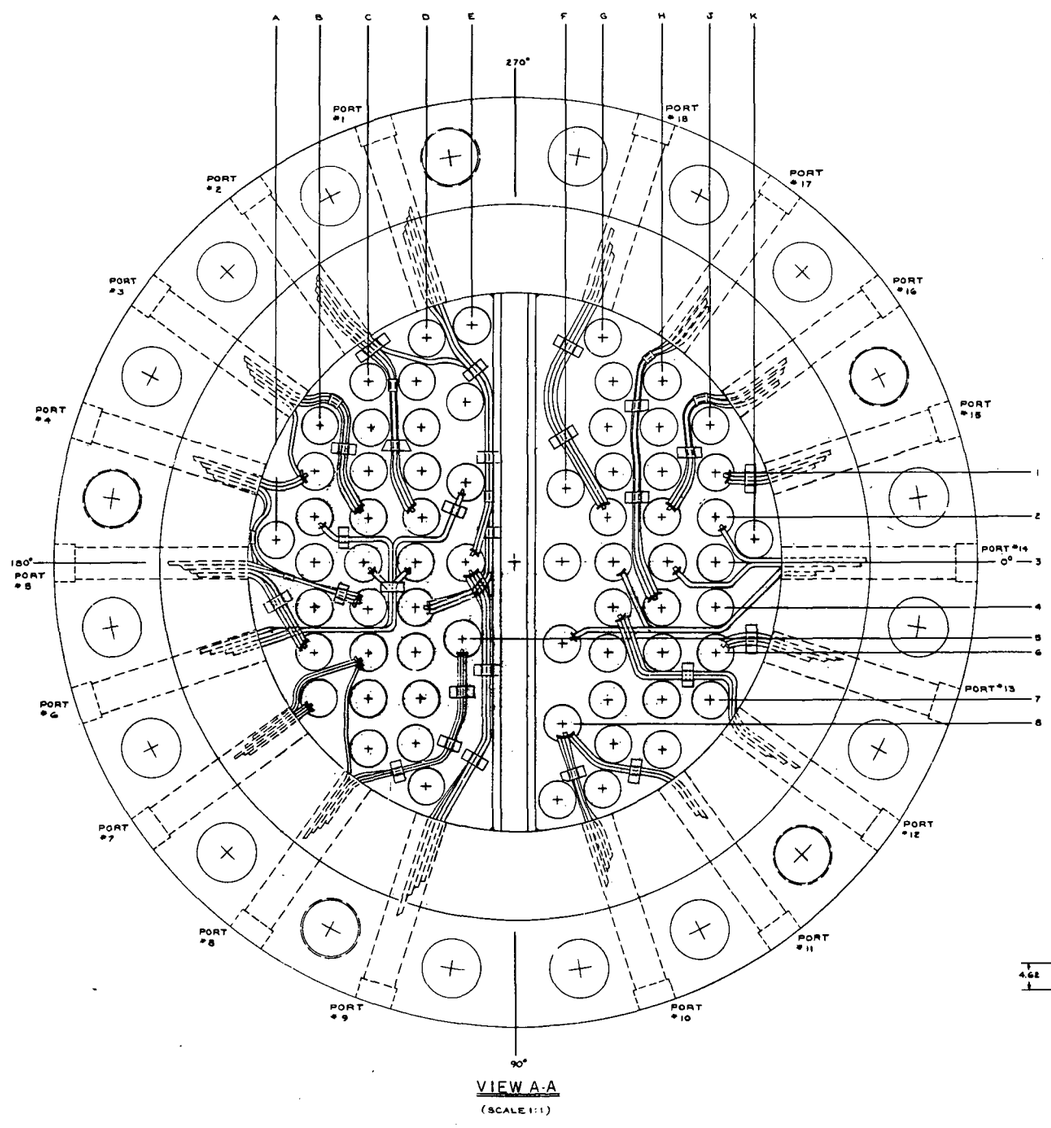

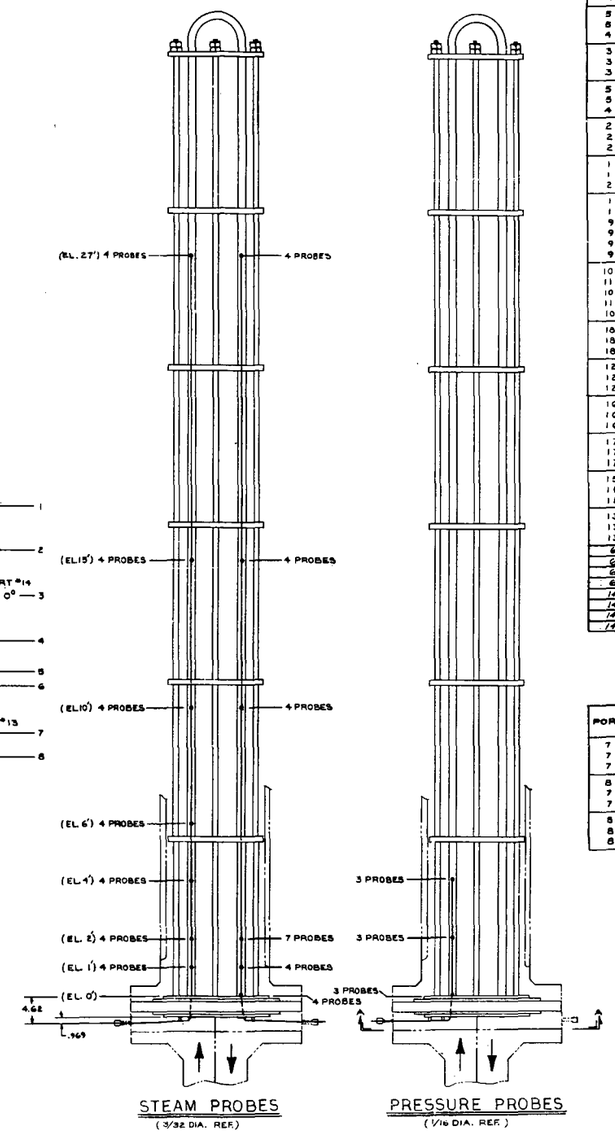

PORT	STEAM PROBE NO.	CO-ORDINATES	ELEV.	T/C TAG
4	S 1	B - 1	6'	348
3	S 2		10'	343
4	S 3		15'	342
5	S 4	B - 6	1'	327
8	S 5		2'	326
4	S 6		4'	334
3	S 7	C - 2	6'	333
3	S 8		10'	332
3	S 9		15'	348
5	S 10	C - 4	1'	310
5	S 11		2'	325
4	S 12		4'	336
2	S 13	D - 2	6'	347
2	S 14		10'	346
2	S 15		15'	344
1	S 16	D - 4	1'	323
1	S 17		2'	322
2	S 18		4'	335
1	S 19	E - 3	1'	329
1	S 20		2'	328
9	S 21		4'	340
9	S 22		6'	331
9	S 23		10'	338
9	S 24		15'	337
10	S 25	F - 5	0'	330
11	S 26		1'	302
10	S 27		2'	301
11	S 28		10'	350
10	S 29		15'	341
18	S 30	G - 2	2'	316
18	S 31		10'	353
18	S 32		15'	351
12	S 33	G - 4	0'	318
12	S 34		1'	319
12	S 35		2'	307
16	S 36	H - 2	2'	320
16	S 37		10'	358
16	S 38		15'	349
17	S 39	H - 4	0'	309
17	S 40		1'	306
17	S 41		2'	308
15	S 42	J - 1	2'	317
15	S 43		10'	352
15	S 44		18'	360
13	S 45	J - 6	0'	303
13	S 46		1'	303
13	S 47		2'	304
6	S 48	B-2	27'	
6	S 49	C-3	27'	
6	S 50	D-3	27'	
6	S 51	E-1	27'	
14	S 52	F-3	27'	
14	S 53	G-3	27'	
14	S 54	H-3	27'	
14	S 55	J-2	27'	

PORT	PRESS. PROBE NO.	CO-ORDINATES	ELEV.	PROBE ELEV. AS BUILT
7	P 1	B - 7	0'	0'
7	P 2		2'	2'
7	P 3		4'	4'-1/64"
8	P 4	C - 6	0'	0'
7	P 5		2'	2'
7	P 6		4'	3'-(11/32)/2
8	P 7	E - 5	0'	0'
8	P 8		2'	2'
8	P 9		4'	4'

Figure 6-29. FLECHT SEASET Natural Circulation Unbroken Loop Steam Generator Instrumentation Steam and Pressure Probes

6-32. Steam Generator Instrumentation

Both steam generators' primary and secondary side walls are extensively instrumented to characterize their behavior during the natural circulation tests. As described in paragraph 6-11, a recirculating secondary side system with additional instrumentation was added to each steam generator.

The inlet and outlet plenums are instrumented with fluid, wall, and insulation thermocouples, and differential pressure cells to measure mass accumulations (figure 6-19). The tubesheet is also instrumented with wall and insulation thermocouples (figure 6-19). At this location in both steam generators, there is a lot of steel mass (plenum flanges, instrument ring, tubesheet, and shell bottom flanges), where stored heat and heat losses could be significant in the mass and energy balance calculations.

The steam generator bundle instrumentation locations for the unbroken loop steam generator are shown in figures 6-28 and 6-29. The bundle instrumentation locations for the broken loop steam generator are shown in figures 6-30 and 6-31. The tube bundle instrumentation is specifically designed to measure a radial variation in heat transfer rate due to expected nonuniform two-phase flow in the inlet plenum. The distribution of secondary fluid and tube wall thermocouples is skewed toward the bottom of the bundle in the unbroken loop steam generator, because most of the heat transfer occurs at the lower elevations.

Data from the steam generator separate effects test[1] showed that, for tests with qualities of 50 percent and test time near or greater than 10 minutes, elevations above 1.22 m (4 ft) were important in calculating steam generator heat transfer. For this reason, more instrumentation was placed in the 1.22 to 3.05 m (4 to 10 ft) elevations in the broken loop steam generator.

The broken loop steam generator was specially instrumented with thermocouples having ungrounded and grounded junctions. The thermocouples with ungrounded junctions are used to monitor fluid temperatures in the primary and the secondary sides. The thermo-

---

1. Howard, R. C., et al., "PWR FLECHT SEASET Steam Generator Separate Effects Task: Task Plan Report," NRC/EPRI/Westinghouse-2, March 1978.

couples with grounded junctions are installed on the steam generator secondary side tube walls. All these thermocouples can be connected differentially to measure temperature differences between the secondary side flow and the tube wall, from the tube wall to the primary side fluid, and/or from the secondary side fluid to the primary side fluid. Table 6-8 identifies 64 broken loop steam generator thermocouple channels that can be connected differentially to provide 32 differential temperature measurements at various elevations and radial positions for both inlet (uphill) and outlet (downhill) sides. The unbroken loop steam generator was instrumented with grounded thermocouples to provide fast response for the FLECHT SEASET steam generator separate effects test. Consequently, these thermocouples cannot be connected differentially. However, additional steam probes installed in the primary side of this steam generator make it possible to measure temperature differences between the secondary and primary fluid at the 8.23 m (27 ft) elevation.

The tubes on the inlet side of the tube bundle were instrumented with differential pressure probes to monitor differential pressure from the zero to 1.2 m (4.0 ft) elevations. The purpose of the differential pressure probes was to detect any mass accumulation in the inlet side of the tube bundle. A summary of the bundle instrumentation is presented in table 6-3 for the unbroken and broken loop steam generators. The instrumentation connected to the CDAS is listed in table 6-4.

Shell wall and insulation thermocouples will be monitored by the CCC data logger.

The recirculating cooling system of both steam generators is instrumented with an inlet orifice plate flowmeter and associated differential pressure cell, a pressure transmitter, and a thermocouple. Measurements from these instruments are used to calculate secondary side flows. Additional thermocouples are located in the outlet lines at the top of the steam generators to monitor outlet temperatures and determine the temperature rise of the secondary side cooling fluid. A differential pressure cell is utilized to determine and, in some tests, control the secondary side liquid level. A pressure transmitter is employed to determine the static pressure at the top of the steam generators shell side.

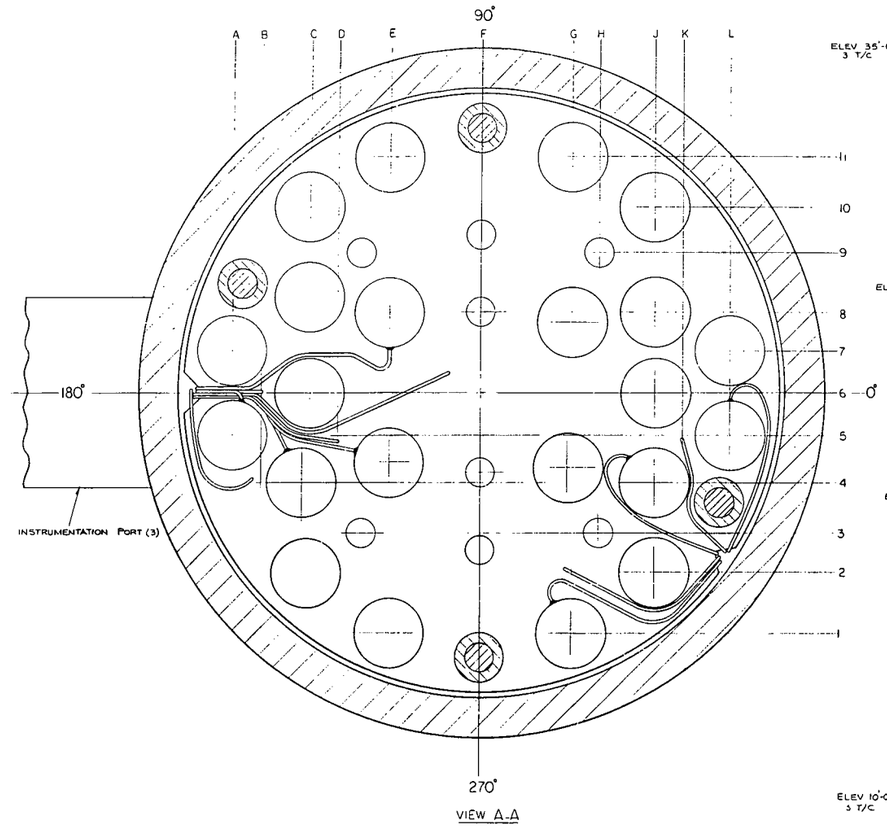

VIEW A-A

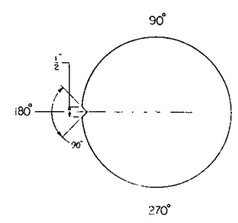

DETAIL B
SCALE 1:2

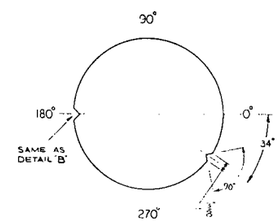

DETAIL C
SCALE 1:2

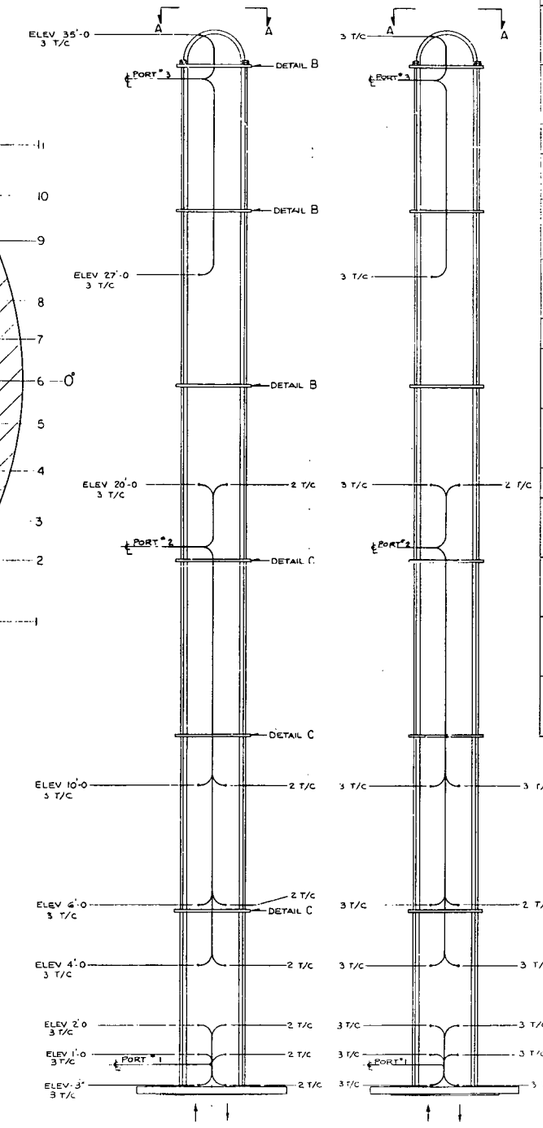

PORT	FLUID T/C NO.	CO-ORDINATES	ELEV.	ELEV. AS BUILT
1	1	B-6	3"	
	2		1'-0	
	3			
2	4		2'-0	
	5		4'-0	
	6		6'-0	
	7		10'-0	
3	8		20'-0	
	9		27'-0	
	10		35'-0	
1	14	D-5	3"	
	15		1'-0	
2	17		2'-0	
	18		4'-0	
	19		6'-0	
	20		10'-0	
	21		20'-0	
3	22		27'-0	
	23		35'-0	
1	24	F-6	3"	
	25		1'-0	
	27		2'-0	
2	28		4'-0	
	29		6'-0	
	30		10'-0	
	31		20'-0	
3	32		27'-0	
	33		35'-0	
1	34	G-2	3"	
	35		1'-0	
	37		2'-0	
2	38		4'-0	
	39		6'-0	
	40		10'-0	
	41		20'-0	
1	42	K-5	3"	
	43		1'-0	
	45		2'-0	
2	46		4'-0	
	47		6'-0	
	48		10'-0	
	49		20'-0	

PORT	WALL T/C NO.	CO-ORDINATES	ELEV.	ELEV. AS BUILT
1	1	A-5	3"	
	2		1'-0	
	3		2'-0	
2	4		4'-0	
	5		6'-0	
	6		10'-0	
	7		20'-0	
3	8		27'-0	
	9		35'-0	
1	10	C-4	3"	
	11		1'-0	
	12		2'-0	
	13		4'-0	
2	14		6'-0	
	15		10'-0	
	16		20'-0	
3	17		27'-0	
	18		35'-0	
1	19	E-4	3"	
	20		1'-0	
	21		2'-0	
2	22		4'-0	
	23		6'-0	
	24		10'-0	
	25		20'-0	
3	26		27'-0	
	27		35'-0	
1	31	G-1	3"	
	32		1'-0	
	33		2'-0	
2	34		4'-0	
	35		10'-0	
	36		3"	
1	37	J-4	1'-0	
	38		2'-0	
	39		4'-0	
	40		6'-0	
2	41		10'-0	
	42		20'-0	
1	43	L-5	3"	
	44		1'-0	
	45		2'-0	
2	46		4'-0	
	47		6'-0	
	48		10'-0	
	49		20'-0	

NOTES:
1 - THE MIN. BEND R. FOR ALL INSTRUMENTATION LEADS MUST BE AT LEAST 4 TIMES THE DIA OF THE LEAD. USE 3/16 R FOR .040 LEAD; 1/4 R FOR .062 LEADS; 3/8 R FOR .093 LEADS.

Figure 6-30. FLECHT SEASET Natural Circulation Broken Loop Steam Generator Fluid and Tube Wall Thermocouples

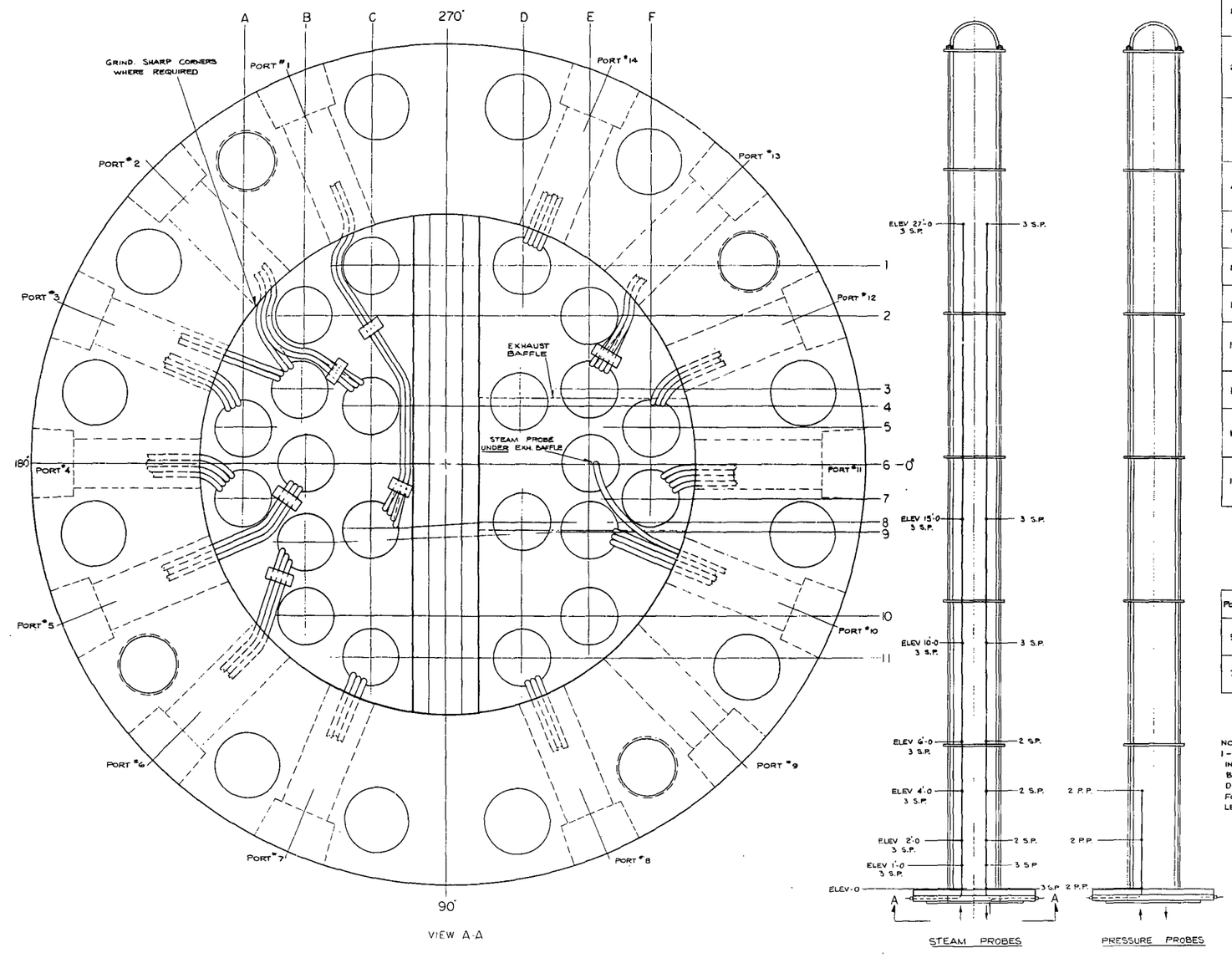

PORT	STEAM PROBE NO.	CO-ORDINATES	ELEV.	T/C TAG
1	S1	C-8	1'-0	
	S2		2'-0	
	S3		4'-0	
	S4		6'-0	
2	S5	C-4	10'-0	
	S6		15'-0	
	S7		27'-0	
	S8	B-3	1'-0	
	S9		2'-0	
3	S10	B-3	4'-0	
	S11		6'-0	
	S12	A-5	10'-0	
	S13		15'-0	
	S14		27'-0	
4	S15	A-7	1'-0	
	S16		2'-0	
	S17		4'-0	
	S18		6'-0	
6	S19	B-9	10'-0	
	S20		15'-0	
	S21		27'-0	
8	S22	D-11	2'-0	
	S23		15'-0	
	S24		27'-0	
10	S25	E-9	10'-0	
	S26		15'-0	
	S27		27'-0	
11	S28	F-7	0'-0	
	S29		1'-0	
	S30		4'-0	
	S31		6'-0	
12	S32	F-5	10'-0	
	S33		15'-0	
	S34		27'-0	
13	S35	E-3	0'-0	
	S36		1'-0	
	S37		4'-0	
	S38		6'-0	
14	S39	D-1	0'-0	
	S40		1'-0	
	S41		2'-0	
	S42		10'-0	

PORT	PRESSURE PROBE NO.	CO-ORDINATES	ELEV.	ELEV. AS BUILT
5	P1	B-6	0'-0	
	P2		2'-0	
	P3		4'-0	
7	P4	C-11	0'-0	
	P5		2'-0	
	P6		4'-0	

NOTES:
1 - THE MIN. BEND R. FOR ALL INSTRUMENTATION LEADS MUST BE AT LEAST 4 TIMES THE DIA OF THE LEAD. USE 3/16 R FOR .040 LEAD ; 1/4 R FOR .062 LEADS ; 3/8 R FOR .093 LEADS.

Figure 6-31. FLECHT SEASET Natural Circulation Broken Loop Steam Generator Instrumentation Steam and Pressure Probes

TABLE 6-8

FLECHT SEASET NATURAL CIRCULATION AND REFLUX CONDENSATION TESTS STEAM GENERATOR ΔT MEASUREMENTS

Elevation [m (ft)]	Secondary Fluid Channel-Tube Wall Channel (T/C-T/C)	Inlet Side		Outlet Side		
		Tube Wall Channel - Primary Fluid Channel (T/C-T/C)	Secondary Fluid Channel - Primary Fluid channel (T/C-T/C)	Secondary Fluid Channel - Tube Wall Channel (T/C-T/C)	Tube Wall Channel-Primary Fluid Channel (T/C-T/C)	Secondary Fluid Channel-Primary Fluid Channel (T/C-T/C)
BROKEN LOOP						
0.08(0.25)	325 - 322 (195 - 73)	-- --	-- --	446 - 444 (23W - 57)	-- --	-- --
0.30(1)	331 - 329 (20T - 46)	328 - 336 (54 - 112)	332 - 334 (5E - 105)	438 -435 (126 - 44)	436 - 439 (43 - 109)	-- --
0.61(2)	340 - 338 (15.0 - 70)	337 - 345 (53 - 108)	341 - 343 (24A1 - 101)	432 - 429 (13M - 52)	-- --	432 - 447 (36A - 111)
1.22(4)	349 - 347 (6F - 71)	346 - 354 (59 - 119)	350 - 352 (25A2 - 102)	425 - 422 (38C - 50)	423 - 426 (5 - 225)	-- --
1.83(6)	358 - 356 (43H - 6)	355 - 363 (10 - 161)	359 - 361 (44I - 158)	418 - 415 (40E - 7)	416 - 419 (8 - 159)	-- --
3.05(10)	367 - 364 (32G - 25)	365 - 372 (29 - 164)	369 -370 (26A - 156)	411 - 409 (31F - 31)	408 -412 (26 - 165)	-- --
6.10(20)	376 - 373 (18R - 67)	-- --	-- --	403 - 401 (17Q - 66)	-- --	-- --
8.23(27)	385 - 382 (28C - 38)	383 - 390 (39 - J)	-- --	-- --	-- --	-- --
10.67(35)	394 - 391 (3C - 76)	-- --	-- --	-- --	-- --	-- --
UNBROKEN LOOP						
8.23(27)	-- --	-- --	268 - 269 (16 - F)			

Broken loop steam generator - 32 ΔT measurements
Unbroken loop steam generator - 1 ΔT measurement

6-33. Pump Loop Seal Instrumentation

The unbroken and broken loops pump loop seal pipe sections are instrumented with fluid and wall thermocouples at five different locations (stations 11 through 15 and 36 through 40, figure 6-19):

-- Stations 11 and 36- The top of the downhill leg, close to the steam generator outlet plenum nozzles

-- Stations 12 and 37- Midway down the downhill leg

-- Stations 13 and 38- Upstream of the turbine meters in the horizontal leg

-- Stations 14 and 39- At the 90-degree elbows between the horizontal and the uphill legs

-- Stations 15 and 40- Downstream of the orifice flanges about two-thirds of the way up the uphill legs

Insulation thermocouples are provided at stations 12, 13, 15, 37, 38, and 40 for calculation of heat losses. A differential pressure cell monitors levels in the downhill side, and this level measurement is used to estimate the mass storage in the pump loop seal piping. Bidirectional turbine meters measure flows through each loop in both directions. Table 6-4 lists all instruments monitored by the CDAS.

6-34. Cold Leg Instrumentation

The cold legs are instrumented with fluid, wall, and insulation thermocouples similar to those on the hot legs (paragraph 6-31). Cold leg instrumentation locations are shown in figure 6-19, table 6-3 summarizes the number of instruments utilized, and table 6-4 lists the instrument channels monitored by the CDAS. The bottom and top fluid thermocouples are installed in the same manner as in the hot legs. The condensed liquid film flowing from the steam generator outlets to the downcomer extension is also rerouted and measured by a rotameter system installed in similar positions as in the hot

legs. The rotameters have a flow range of 0.63×10^{-5} to 6.3×10^{-5} m^3/sec (0.1 to 1.0 gal/min). The condensed liquid film is returned to approximately the midplane elevation of the downcomer.

Additional instrumentation is provided at the unbroken loop cold leg injection section, as shown in figure 6-19. It consists of a differential pressure cell and a pressure transducer to determine pressure- and flow-induced pressure oscillations, fluid thermocouples upstream and downstream of the injection point (stations 19 and 20), and a fluid thermocouple and a pressure transducer in the injection line close to the injection point to monitor cold leg injection cold water temperature and injection pressure.

6-35. Downcomer Instrumentation

The instrumentation in this component consists of fluid thermocouples located at the bottom of the downcomer and at the 5.03 m (16.5 ft) elevation, wall and insulation thermocouples at the 2.44 and 5.03 m (8 and 16.5 ft) elevations, two differential pressure cells to measure levels from the zero to 5.03 m (16.5 ft) elevations and from the 5.03 m (16.5 ft) elevation to the top of the downcomer extension, and a pressure transducer which monitors the static pressure at the top of the downcomer extension. This instrumentation is shown in figure 6-19 and CDAS channels are listed in table 6-4.

6-36. Crossover Leg Instrumentation

The crossover leg is instrumented with a bidirectional turboprobe with a range from 1.45×10^{-4} to 1.45×10^{-2} m^3/sec (2.3 to 230 gal/min) to monitor flows in and out of the test section. This flow measurement can be compared to the sum of the flows in the unbroken and broken legs measured by the turbine meters in the pump loop seals. Fluid, wall, and insulation thermocouples are provided and located upstream of the turboprobe, as shown in figure 6-19.

6-37. Accumulator Instrumentation

Accumulators no. 1 and 2 are instrumented with a bottom fluid thermocouple, a differential pressure transducer to measure levels, and a pressure transmitter for

determining static gas overpressure. Either accumulator can be routed through the proper valving to the bottom of downcomer injection line or to the cold leg and upper head injection (UHI) lines. The injection lines are equipped with a bidirectional turbine meter with a range of 2.0×10^{-5} to 1.57×10^{-4} m^3/sec (0.33 to 2.5 gal/min), and a unidirectional turbine meter with a range of 1.26×10^{-4} to 1.26×10^{-3} m^3/sec (2 to 20 gal/min). All these instruments are shown in figure 6-19 and the corresponding CDAS channels are listed in table 6-4.

6-38. Noncondensible Gas Injection System Instrumentation

The noncondensible gas injection system is instrumented with a fluid thermocouple to measure the gas temperature, a pressure transducer to monitor gas injection line pressure, and two gas flowmeters. The flowmeters have a range of 0 to 5000 SCCM (standard cubic centimeters per minute) for the unbroken loop and 0 to 1000 SCCM for the broken loop injection lines (figure 6-19). Instrumentation connected to the CDAS is listed in table 6-4.

6-39. Balance of Loop Instrumentation

In addition, the loop is instrumented with various differential pressure cells to measure pressure drops across the following components:

-- Downcomer to inlet plenum, measuring the pressure drop across the crossover leg

-- Upper plenum to the unbroken loop steam generator inlet plenum bottom, monitoring pressure losses across the unbroken loop hot leg

-- Upper plenum to the broken loop steam generator inlet plenum bottom, monitoring pressure losses across the broken loop hot leg

-- Upper plenum to downcomer extension, measuring entire loop pressure losses, including hot legs, steam generators, pump loop seals, and cold legs

-- Unbroken loop steam generator outlet plenum to the top of the downcomer extension, monitoring pressure losses across the unbroken loop pump loop seal and cold leg

-- Broken loop steam generator outlet plenum to the top of the downcomer extension, measuring the pressure drop across the broken loop pump loop seal and cold leg

All these instruments are shown in figure 6-19 and are listed in the CDAS channel instrumentation table 6-4.

6-40. Noncondensible Gas Sampling System Instrumentation

During natural circulation tests with noncondensibles, steam-water-helium mixtures are sampled and analyzed with a system shown schematically in figure 6-32. The aspirating steam probes installed inside both steam generators primary side tubes are used as sampling probes at various radial and axial locations. Figures 6-33 and 6-34 show the radial locations and elevations of the sampling probes for the unbroken loop and broken loop steam generators, respectively.

The sampling probes are externally connected to a manifold, as shown in figure 6-32. Samples are taken through each individual sampling probe. The sample, a mixture of water, steam, and noncondensible helium gas, is passed through a condenser where the steam is condensed and the water-helium mixture is cooled to room temperature. A pressure regulator downstream of the condenser reduces the system pressure to atmospheric pressure. The water and helium mixture is passed through a stripping column where these two components are separated. The helium is carried out (stripped) by a low flow of argon gas injected at the bottom of the stripping column. The water from the stripping column is passed through a flowmeter and dumped to drain. The argon-helium mixture is passed through a drying column, where moisture is adsorbed by a drying agent. The dried gas mixture is then passed through the GOW-MAC gas analyzer conductivity cell. A parallel stream of the carrier gas (argon) is also passed through the GOW-MAC gas analyzer reference conductivity cell. The difference in conductivity between the sample and reference streams is proportional to the helium concentration. This helium concentration and the water measured by the flowmeter is

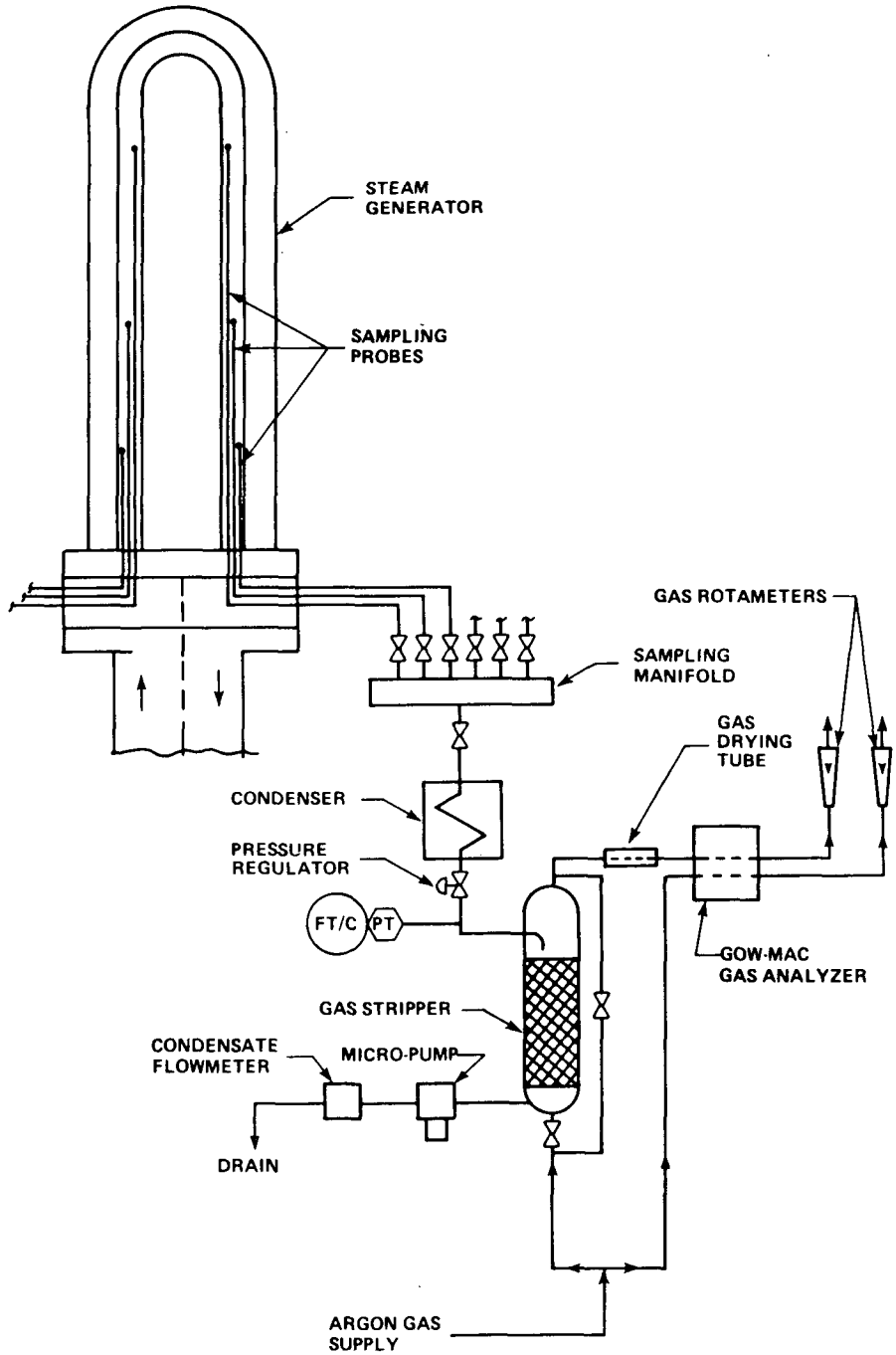

Figure 6-32. FLECHT SEASET Natural Circulation Noncondensible Gas Sampling System

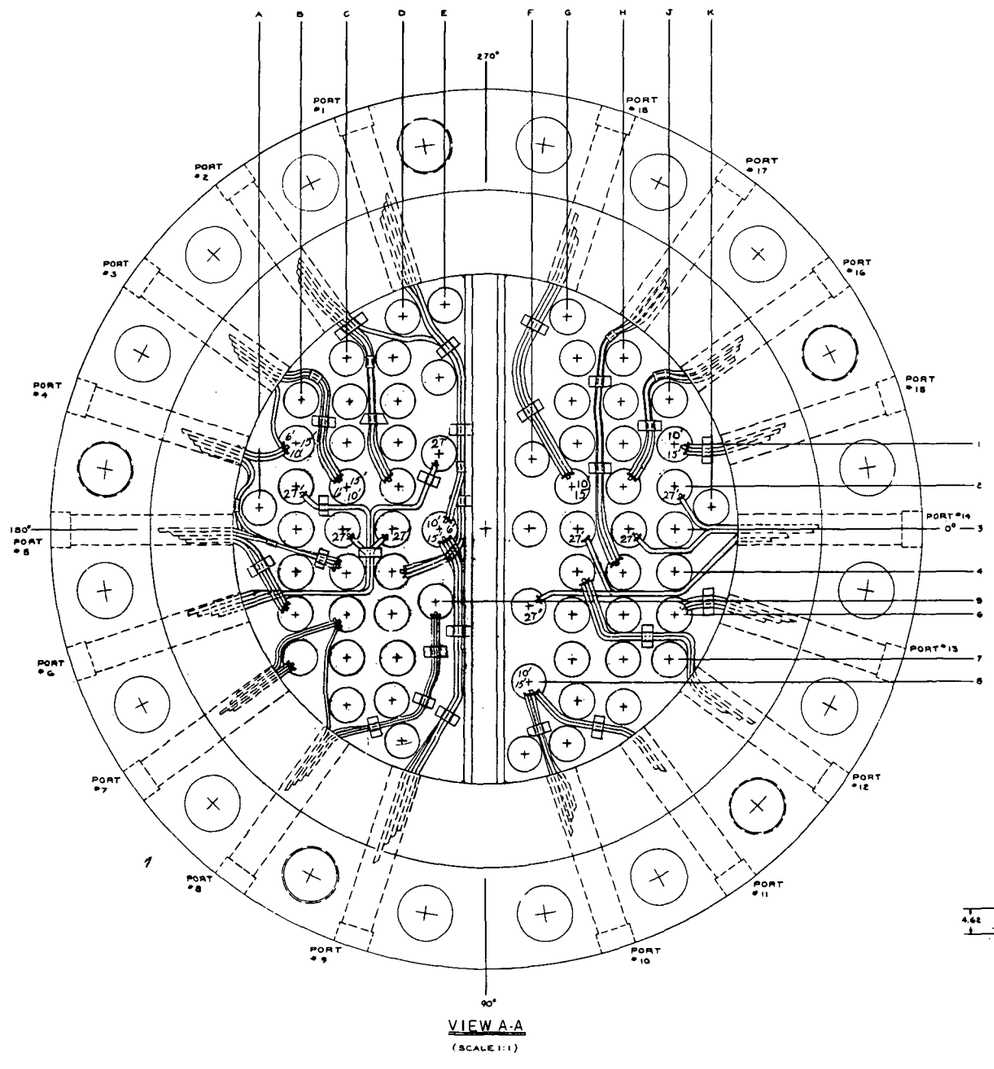

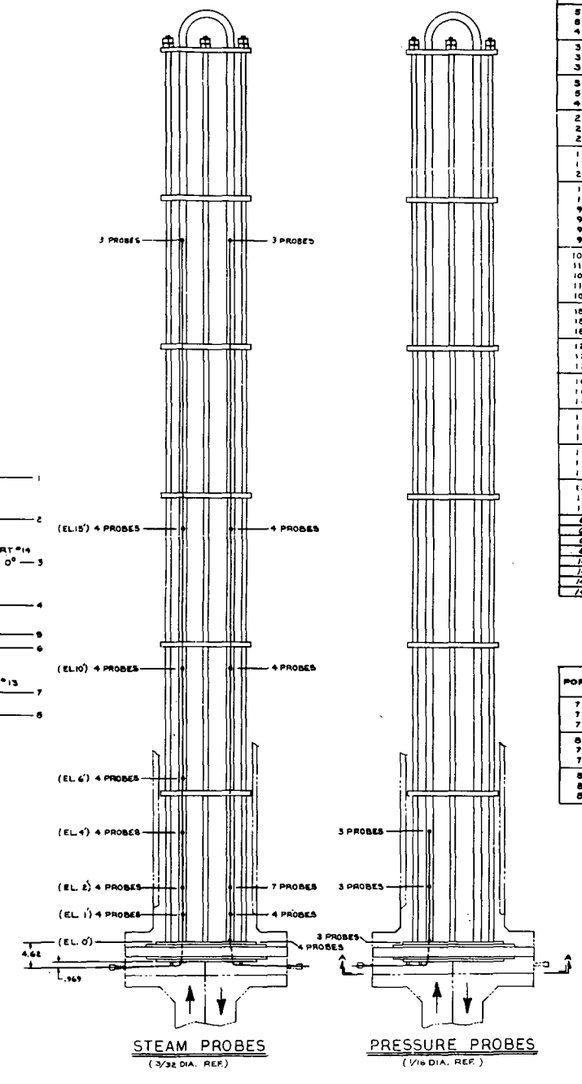

PORT	STEAM PROBE NO.	CO-ORDINATES	ELEV.	T/C TAG
4	S1	B-1	6'	345
3	S2		10'	343
4	S3		15'	342
5	S4	B-6	1'	327
6	S5		2'	326
4	S6		4'	334
3	S7	C-2	6'	333
3	S8		10'	332
3	S9		15'	345
5	S10	C-4	1'	310
5	S11		2'	328
4	S12		4'	336
2	S13	D-2	6'	347
2	S14		10'	346
2	S15		15'	344
1	S16	D-4	1'	323
1	S17		2'	322
2	S18		4'	335
1	S19	E-3	1'	329
1	S20		2'	328
9	S21		4'	340
9	S22		6'	331
9	S23		10'	338
9	S24		15'	337
10	S25	F-5	0'	330
11	S26		1'	302
10	S27		2'	301
11	S28		10'	350
10	S29		15'	341
15	S30	G-2	2'	314
15	S31		10'	353
15	S32		15'	351
12	S33	G-4	0'	318
12	S34		1'	319
12	S35		2'	307
16	S36	H-2	2'	320
16	S37		10'	358
16	S38		15'	349
17	S39	H-4	0'	309
17	S40		1'	306
17	S41		2'	308
15	S42	J-1	2'	317
15	S43		10'	352
15	S44		15'	360
13	S45	J-4	0'	305
13	S46		1'	303
13	S47		2'	304
6	S48	B-2	27'	
6	S49	C-3	27'	
6	S50	D-3	27'	
6	S51	E-1	27'	
14	S52	F-3	27'	
14	S53	G-3	27'	
14	S54	H-3	27'	
14	S55	J-2	27'	

PORT	PRESS. PROBE NO.	CO-ORDINATES	ELEV.	PROBE ELEV. AS BUILT
7	P1	B-7	0'	0'
7	P2		2'	2'
7	P3		4'	4'-1/64"
8	P4	C-6	0'	0'
7	P5		2'	2'
7	P6		4'	3'-11 15/32"
8	P7	E-5	0'	0'
8	P8		2'	2'
8	P9		4'	4'

Figure 6-33. FLECHT SEASET Natural Circulation Unbroken Loop Steam Generator Noncondensible Gas Sampling Locations

20616-10

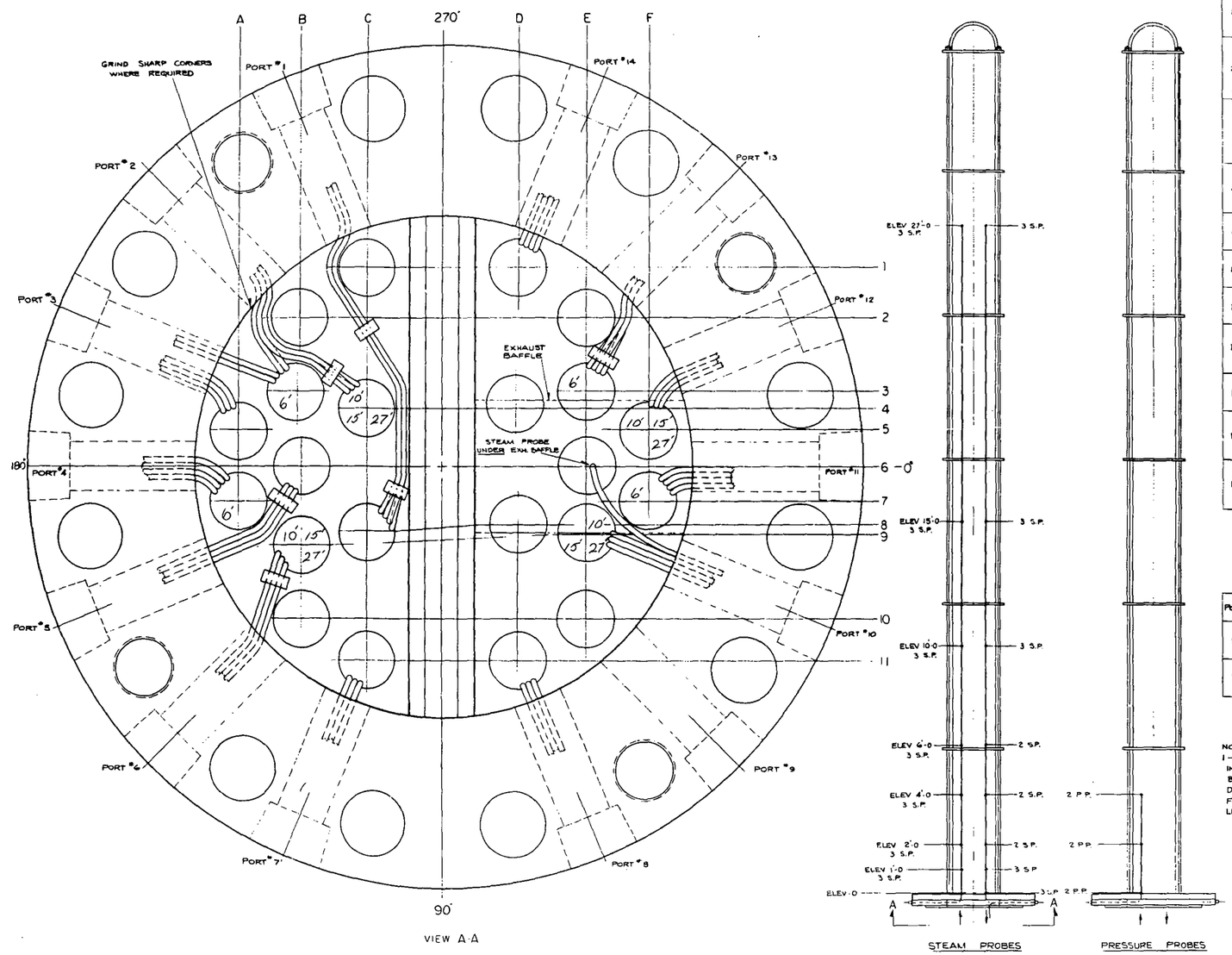

PORT	STEAM PROBE NO.	CO-ORDINATES	ELEV.	T/C TAG
1	S1	C-8	1'-0	
	S2		2'-0	
	S3		4'-0	
	S4		6'-0	
2	S5	C-4	10'-0	
	S6		15'-0	
	S7		27'-0	
	S8	B-3	1'-0	
	S9		2'-0	
3	S10	B-3	4'-0	
	S11		6'-0	
	S12	A-5	10'-0	
	S13		15'-0	
	S14		27'-0	
4	S15	A-7	1'-0	
	S16		2'-0	
	S17		4'-0	
	S18		6'-0	
6	S19	B-9	10'-0	
	S20		15'-0	
	S21		27'-0	
8	S22	D-11	2'-0	
	S23		15'-0	
	S24		27'-0	
10	S25	E-9	10'-0	
	S26		15'-0	
	S27		27'-0	
11	S28	F-7	0'-0	
	S29		1'-0	
	S30		4'-0	
	S31		6'-0	
12	S32	F-5	10'-0	
	S33		15'-0	
	S34		27'-0	
13	S35	E-3	0'-0	
	S36		1'-0	
	S37		4'-0	
	S38		6'-0	
14	S39	D-1	0'-0	
	S40		1'-0	
	S41		2'-0	
	S42		10'-0	

PORT	PRESSURE PROBE NO.	CO-ORDINATES	ELEV.	ELEV. AS BUILT
5	P1	B-6	0'-0	
	P2		2'-0	
	P3		4'-0	
7	P4	C-11	0'-0	
	P5		2'-0	
	P6		4'-0	

NOTES:
1 - THE MIN. BEND R. FOR ALL INSTRUMENTATION LEADS MUST BE AT LEAST 4 TIMES THE DIA OF THE LEAD. USE 3/16 R FOR .040 LEAD; 1/4 R FOR .062 LEADS; 3/8 R FOR .093 LEADS.

Figure 6-34. FLECHT SEASET Natural Circulation Broken Loop Steam Generator Noncondensible Gas Sampling Locations

related to the helium gas concentration at the sampling location by means of calibration curves of a typical sampling probe (aspirating steam probe). The GOW-MAC analyzer output is recorded in a X-Y recorder. The flowmeter signal is monitored by the CCC data logger.

6-41. DATA VALIDATION CRITERIA AND PROCEDURES

Data validation begins with instrumentation performance reliability checks. All the data collection instrumentation is periodically calibrated to assure the accuracy of the data.

The data validation process is further reinforced when all instrumentation is checked for proper operation prior to the actual running of a test. Before each test, a reading from every channel is recorded and compared to the expected value for that channel. An abnormal reading will indicate a problem in that channel, and corrective actions can be taken before the actual test is run. If the discrepancy cannot readily be resolved, an assessment of the ability to make a valid test run without the defective channel is made. Then, either the test is run noting the defective channel, or testing ceases until the situation is corrected. This channel verification procedure increases the probability that all instrumentation will work properly once a test is under way.

If some instrumentation fails just prior to or during a test but the remaining instrumentation is sufficient to calculate overall mass balances, some heat transfer coefficients, fluid temperatures, and all orifice meter flowrates, then the run may still be considered valid. If the instrumentation is not sufficient for these calculations, the run is considered invalid and will be repeated. If excessive instrumentation failure occurs during the testing, and it becomes apparent that the original program objectives cannot be met, serious consideration is given to discontinuing testing for repair or replacement of the affected channels. In any event, an attempt is made to repair any failure before another test is performed.

The main criterion for run validation in the natural circulation tests was the capability to perform a mass and energy balance within 10 percent around each major component in the system (rod bundle, upper plenum, steam generator, and so forth). For

this purpose, the minimum instrumentation to be operating during each test is listed in table 6-9.

This list of minimum instrumentation is based on a judgment of the minimum data required to fulfill the task objectives. Actual test data may indicate that a lesser subset of the instrumentation is needed to fulfill the task objectives.

For each test conducted, a Run Specification and Validation Sheet was completed (appendix G). This table specifies initial test conditions and validation requirements for each FLECHT SEASET natural circulation and reflux condensation test. This table also provides space for comments on run conditions, causes for terminating and invalidating a run, instrumentation failures, and preliminary selected thermocouple data.

After the instrumentation had checked out satisfactorily and the test was run, the data for each channel were scrutinized to see if the system behaved as expected. Abnormal behavior of a data channel was investigated to determine if it was due to equipment malfunction or a physical phenomenon. These procedures, along with periodic equipment calibrations, were designed to assure that the data being recorded were accurate and reliable.

Another aspect of data validation was considered once the instrumentation reliability had been determined. The actual test conditions were compared with the parameters specified by the test matrix to determine if the test run satisfied the test matrix. The facility conditions before initiation of a test were compared to the expected values for such parameters as bundle power, system pressure, fluid temperatures, flows, and levels if applicable. The instrumentation transient responses were compared with their expected system behavior to determine if there were any data channel problems, system control problems, or deficiencies in the facility hardware. Conversion of the data to engineering units on the SEL computer allowed preliminary test validation to be done upon completion of running the test and before data analysis. This preliminary validation provided for timely feedback on facility operation and data collecting equipment performance.

TABLE 6-9

FLECHT SEASET NATURAL CIRCULATION AND REFLUX CONDENSATION TESTS MINIMUM INSTRUMENTATION REQUIREMENTS FOR A VALID TEST

Channel	Description
TEST SECTION, UPPER PLENUM, AND LOWER PLENUM	
461	Fluid T/C, lower plenum
38	Bare T/C, 71 [2.13 m (7 ft) heated length]
472	Core plate fluid T/C
463	Insulation T/C, lower plenum
468	Housing insulation T/C, 1.83 m (6 ft), 135°
462	Wall T/C, lower plenum
465	Housing wall T/C, 1.83 m (6 ft)
502	Housing D/P, 0 - 3.66 m (0 - 12 ft)
503	Housing D/P, 3.66 - 4.03 m (144.0 - 158.75 in.)
504	Housing D/P, 4.03 - 4.18 m (158.75 - 164.75 in.)
509	Upper plenum D/P, 4.03-5.31 m (158.75 - 209.0 in.)
545	Upper plenum D/P, 4.88 - 5.33 m (192.0 - 210 in.)
546	Upper plenum pressure transmitter
539	Upper plenum - downcomer extension D/P
558	Primary A bundle power
560	Primary B bundle power
562	Primary C bundle power
UNBROKEN LOOP HOT LEG	
54	Bottom fluid T/C, station 01, unbroken loop hot leg
81	Bottom fluid T/C, station 10, unbroken loop hot leg
69	Top insulation T/C, station 06, unbroken loop hot leg
68	Top wall T/C, station 06, unbroken loop hot leg
512	Hot leg D/P, inlet plenum, unbroken loop steam generator
513	Hot leg D/P hot leg rise, unbroken loop steam generator
569	Hot leg condensing film rotameter, unbroken loop A
BROKEN LOOP HOT LEG	
126	Top fluid T/C, station 28, broken loop hot leg
154	Bottom fluid T/C, station 35, broken loop hot leg
142	Top insulation T/C, station 32, broken loop hot leg
141	Top wall T/C, station 32, broken loop hot leg
514	Hot leg D/P, inlet plenum, broken loop steam generator
515	Hot leg D/P, hot leg rise, broken loop steam generator
571	Hot leg condensing film liquid film rotameter, broken loop hot leg

TABLE 6-9 (cont)

FLECHT SEASET NATURAL CIRCULATION AND REFLUX CONDENSATION TESTS MINIMUM INSTRUMENTATION REQUIREMENTS FOR A VALID TEST

Channel	Description
UNBROKEN LOOP STEAM GENERATOR	
201	Inlet plenum steam probe, unbroken loop steam generator
203	Outlet plenum steam probe, unbroken loop steam generator
485	Inlet flange insulation T/C, unbroken loop steam generator
202	Inlet wall T/C, unbroken loop steam generator
204	Outlet wall T/C, unbroken loop steam generator
554	Inlet secondary side flow T/C, unbroken loop steam generator
555	Outlet secondary side flow T/C, unbroken loop steam generator
525	Secondary side D/P, 0 m (0 ft) - top, unbroken loop steam generator
516	Inlet plenum, D/P, 5 cm (2 in.) - top, unbroken loop steam generator
517	Outlet plenum D/P, 5 cm (2 in.) - top, unbroken loop steam generator
549	Secondary pressure transmitter, unbroken loop steam generator
541	Secondary orifice D/P, unbroken loop steam generator
566	Secondary orifice pressure transmitter, unbroken loop steam generator
518	Inlet-outlet plenum D/P, unbroken loop steam generator
BROKEN LOOP STEAM GENERATOR	
449	Inlet plenum steam probe, broken loop steam generator
451	Outlet plenum steam probe, broken loop steam generator
457	Inlet flange insulation T/C, broken loop steam generator
450	Inlet plenum wall T/C, broken loop steam generator
452	Outlet plenum wall T/C, broken loop steam generator
556	Inlet secondary side flow T/C, broken loop steam generator
557	Outlet secondary side flow T/C, broken loop steam generator
537	Accumulator no. 2, pressure transmitter, broken loop steam generator
526	Inlet plenum D/P, 5 cm (2 in.) - top, broken loop steam generator
527	Outlet plenum D/P, 5 cm (2 in.) - top, broken loop steam generator
550	Secondary pressure transmitter, broken loop steam generator
542	Secondary orifice D/P, broken loop steam generator
567	Secondary orifice D/P, broken loop steam generator
528	Inlet-outlet plenum D/P, broken loop steam generator

TABLE 6-9 (cont)

FLECHT SEASET NATURAL CIRCULATION AND REFLUX CONDENSATION TESTS MINIMUM INSTRUMENTATION REQUIREMENTS FOR A VALID TEST

Channel	Description
UNBROKEN LOOP PUMP LOOP SEAL	
85	Fluid T/C, station 12, unbroken loop pump loop seal
93	Fluid T/C, station 15, unbroken loop pump loop seal
90	Insulation T/C, station 13, unbroken loop pump loop seal
89	Wall T/C, station 13, unbroken loop pump loop seal
574	Pump loop seal bidirectional, unbroken loop pump loop seal
543	Pump seal down leg D/P, unbroken loop pump loop seal
BROKEN LOOP PUMP LOOP SEAL	
158	Fluid T/C, station 37, broken loop pump loop seal
166	Fluid T/C, station 40, broken loop pump loop seal
163	Insulation T/C, station 38, broken loop pump loop seal
162	Wall T/C, station 38, broken loop pump loop seal
575	Pump loop seal bidirectional, broken loop pump loop seal
544	Pump seal down leg D/P, broken loop pump loop seal
UNBROKEN LOOP COLD LEG	
122	Bottom fluid T/C, station 27, unbroken loop cold leg
112	Top wall T/C, station 22
111	Top fluid T/C, station 22
572	Cold leg condensing film rotameter, unbroken loop cold leg
532	Cold leg outlet-downcomer D/P, unbroken loop cold leg
BROKEN LOOP COLD LEG	
195	Bottom fluid T/C, station 48, broken loop cold leg
178	Top insulation T/C, station 43, broken loop cold leg
177	Top wall T/C, station 43, broken loop cold leg
513	Cold leg condensing film rotameter, broken loop cold leg
534	Cold leg outlet-downcomer D/P, broken loop cold leg
DOWNCOMER	
481	Fluid T/C, 4.82 m (15.83 ft), downcomer
478	Fluid T/C, 0.30 m (1 ft), downcomer
480	Insulation T/C, 2.44 m (8 ft), downcomer
479	Wall T/C, 2.44 m (8 ft), downcomer

TABLE 6-9 (cont)

FLECHT SEASET NATURAL CIRCULATION AND REFLUX CONDENSATION TESTS MINIMUM INSTRUMENTATION REQUIREMENTS FOR A VALID TEST

Channel	Description
510	Downcomer D/P, 0-5.03 m (0-198 in.), downcomer
511	Downcomer D/P, 5.03 m (198 in.) top, downcomer
547	Downcomer extension pressure transmitter, downcomer
DOWNCOMER BEND AND CROSSOVER	
460	Insulation T/C, crossover leg
459	Wall T/C, crossover leg
576	Crossover leg bidirectional turbo-probe
ACCUMULATOR NO. 1	
489	Accumulator no. 1 fluid T/C
536	Accumulator no. 1 pressure transmitter
540	Accumulator no. 1 D/P, 0.30 m (12 in.), top
ACCUMULATOR NO. 2	
321	Accumulator no. fluid T/C
537	Accumulator no. pressure transmitter
538	Accumulator no. D/P
COLD LEG AND UHI INJECTION SYSTEM	
198	Cold leg injection line fluid T/C unbroken loop cold leg
565	Injection line turbine meter cold leg
548	Cold leg injection pressure transmitter
NONCONDENSIBLE GAS INJECTION LINE	
552	Gas injection line unbroken loop hot leg flowmeter
551	Gas injection pressure transmitter
488	Injection line fluid thermocouple, inert gas
553	Gas injection line broken loop hot leg flowmeter
BACKFLOW INJECTION LINE	
564	Injection line bidirectional
199	Accumulator no. 1 fluid T/C

After the instrumentation has been functionally checked and the test parameters and performance have been compared with the test matrix, the final data validation is performed during data reduction and analysis. In the process of data reduction and analysis, system mass and energy balance will be computed. These calculations determine if the data are within specified accuracy and whether the instrumentation is adequate for analyzing what has happened in the system.

SECTION 7

TEST MATRIX

7-1. INTRODUCTION

Paragraphs 7-2 through 7-25 of this section describe shakedown tests required to ensure that the FLECHT SEASET facility was operating properly and performed tests specified in the test matrix. The test matrix, which is explained in paragraphs 7-26 through 7-46, was designed to meet the task objectives and fulfill the data requirements discussed in sections 2 and 3. A final as-run test matrix will be presented in the data analysis and evaluating report.

7-2. SHAKEDOWN TEST MATRIX

Prior to conducting the natural circulation and reflux condensation tests outlined in paragraphs 7-26 through 7-46, a series of shakedown tests were run on the test facility. These shakedown tests were conducted not only on separate facility components, but also on the completely assembled test facility.

The purpose of shakedown tests is to ensure that the instrumentation, control, and data acquisition systems were working properly so that useful and valid data could be obtained during the natural circulation experiments. Some of the shakedown tests were also intended to verify and adjust control procedures. A brief summary of each shakedown test follows. A more detailed discussion is presented in appendix F.

The following paragraphs outline the shakedown tests conducted on various facility components prior to performing the test matrix.

7-3. Thermocouple Wiring Connection Checks

The purpose of this test is to check the continuity of each thermocouple wiring connection from the patch board to the computer.

7-4. Heater Rod Power Connection Check

This test is intended to check the continuity of each heater rod power connection at the fuel panel.

7-5. Instrumented Heater Rod Radial Location and Corresponding Thermocouple Checks

This test, performed only on rods whose thermocouples were connected to the computer, is intended to check the following items:

-- For each instrumented heater rod, all corresponding thermocouples are checked for appropriate computer channel hookup and proper recording of data.

-- In completing the above check, radial power connections between the fuse panel and the appropriate heater rod are confirmed.

-- The output polarity of each thermocouple at the computer is also checked.

7-6. Heater Rod, Thimble, and Steam Probe Thermocouple Axial Location Checks

This test, performed using only instrumented heater rods, is intended to check the following items:

-- For each bundle thermocouple elevation, all corresponding heater rod, thimble, and steam probe thermocouples are checked for appropriate computer channel axial hookup and proper recording of data.

-- In completing the above check, each heater rod, thimble, and steam probe thermocouple elevation is confirmed.

7-7. Steam Generator Thermocouple Axial Location Checks

In this test, the steam generator secondary side is filled to a known level and the response of the secondary fluid and tube wall thermocouples is recorded. The thermocouples' response as the water level increases indicates the installed axial position of the thermocouple. This test was conducted on both steam generators.

7-8. Rod Bundle Housing Differential Pressure Cell Axial Location Checks; Steam Generator Plenum, Downcomer, Upper Plenum, and Accumulator Volume and Level Transmitter Checks; and Component Volume Checks

This test is intended to check the following items:

-- Rod bundle housing and loop differential pressure cells are checked for appropriate computer channel hookup and proper operation.

-- Rod bundle housing control volumes are established in 0.30 m (12 in.) increments.

-- The upper and lower plenum volumes and the downcomer volume are checked.

-- Accumulator and steam generator plenum volumes are determined.

7-9. Pressure Transmitter and Differential Pressure Cell Zero Shifts

During this test, all differential pressure cell zero readings and zero shifts are checked.

7-10. Loop Primary Side Filling Procedure and System Volume Checks

This shakedown test verifies that a noncondensible gas can be purged from the test loop with steam. This method was used to get the loop water solid for the single-phase natural circulation tests.

7-11. Liquid Flowmeter Calibration Checks

This test is intended to check the following items:

-- An in-place check of the flowmeter calibrations for agreement with the full flow range calibrations performed prior to the shakedown tests

-- The flowmeters for appropriate computer channel hookup

7-12. Hot Leg and Cold Leg Liquid Film Flowrate Meter Check

The purpose of this test is to check the special hot and cold leg piping used in the reflux condensation tests, which contains a flowmeter to measure any condensed steam flowing back to the rod bundle upper plenum.

7-13. Test Loop Hydraulic Loss Coefficient Measurements

This test is run by isolating parts of the test loop and supplying a known mass flow of steam to the isolated part of the loop. Installed test loop instrumentation is monitored for flow and pressure drop. From these data, the loop hydraulic loss coefficients are calculated.

7-14. Loop Heatup and Heat Loss Check

In this test, the loop heatup procedure is verified and the heat loss through the pipe and component walls to the environment is measured.

7-15. Isothermal Calibration of Steam Generator Bundle Thermocouples

The purpose of this test is to define the calibration characteristics of the steam generator bundle thermocouples after they are installed in the tube bundle. Two types of tests were run to determine the thermocouple response characteristics. The first type of test was an isothermal (zero heat flux) test. The second type consisted of

differential thermocouple corrections (see paragraph 6-32). In these tests, the difference between local secondary fluid, tube wall, and steam probe temperatures was measured. Generally, in the isothermal tests the measured temperature differences are not zero because of calibration differences between the individual thermocouples. This calibration characteristic was measured at various temperatures to establish trends as a function of temperature.

7-16. Saturation of Primary Side Water with Noncondensibles and Sampling System Checks

This test determines how much helium (noncondensible gas) is required to saturate the system primary side water, and how long it takes. The operation of the sampling system and helium analyzer instrumentation is also checked. The test provides a check between the sampling probe bench calibration and the facility sampling system.

7-17. Noncondensibles Injection Checks

This test checks the helium injection system operation, and the interaction between the primary side and accumulator no. 1 (pressurizer). This test should be a continuation of the previous test (paragraph 7-16).

7-18. System Pressure Relief Checks

The purpose of this test is to check the ability of the spring-loaded pressure relief valves to depressurize the system in case of overpressurization. These valves are connected to one of the drain lines of the crossover leg.

7-19. Accumulator No. 1 Gas Overpressure Feed-and-Bleed System Checks

This test checks the feed-and-bleed capabilities of the accumulator's gas overpressurizing systems to maintain a constant pressure during level changes in these tanks due to primary side mass depletion or mass injection transients.

7-20. Cold Leg Injection Checks

The purpose of this test is to check the water injection system capability of injecting water at a rate of 7.82×10^{-4} m^3/sec (1.67 lb/sec or 12.4 gal/min) for 48 seconds while maintaining constant pressure in the primary side.

7-21. UHI Injection Checks

This test checks the capability of the injection water system to simulate upper head injection (UHI) during different modes of natural circulation.

7-22. Steam Generator Secondary Side Cooling System Flowmeter Calibration Checks

The purpose of this test is to check in place the calibrations of the flowmeter and related instrumentation.

7-23. Steam Generator Secondary Side Boiling Mode at Constant Level, Boiloff (Drying), and Recovery Checks

The purpose of this test is to check the operation of the steam secondary side cooling system in the boiling mode at constant level, boil the secondary side dry, and recover by establishing forced circulation through the secondary side.

7-24. Single-Phase, Two-Phase, and Reflux Condesnation Shakedown Test

The purpose of this test is to make sure that all facility instrumentation and controls work properly, to determine the time constant of the system or how long it takes for the system to reach steady state after a stepped change has been made, and at what rates data should be taken during a test. This test is similar to test no. 8 of the test matrix and the same procedure should be followed. Test conditions are given in table F-10 in appendix F.

7-25. Forced Convection Secondary Side Film Coefficient Calibration Tests

The purpose of this test is to develop a set of correlations for the steam generator secondary side film coefficients. This will be accomplished by controlling the primary and secondary side flow and temperature boundary conditions.

7-26. NATURAL CIRCULATION AND REFLUX CONDENSATION TEST MATRIX

A test matrix was designed to study the system's thermal-hydraulic performance for each of the natural circulating cooling modes, single-phase, two-phase, and reflux condensation. The test matrix consists of the 20 tests shown in table 7-1.

Parametric studies will be made to investigate the effect of the following:

-- Variation in bundle power

-- Heat sink (steam generator secondary sides)

-- Cold leg injection and upper head injection (UHI)

-- Noncondensible gas injection

-- Transient from single-phase flow to two-phase flow to reflux condensation cooling mode

A description of each test of the proposed natural circulation and reflux condensation test matrix is given below. Since it is the first time that this type of test was run in this facility, these test procedures served simply as guidelines, and were open to change or modification depending on the test facility response and shakedown test results. The as-run test matrix will be presented in the data analysis and evaluation report.

7-27. Test No. 1 - Single-Phase Natural Circulation Reference Test

Objectives:

1. To determine single-phase natural circulation primary side flows, and the time needed to establish natural circulation steady-state conditions at various bundle powers at constant pressure with variable system mass inventory (pressurizer valved into the system)

2. To determine forced convection flows in the steam generator secondary sides needed to establish and maintain primary side natural circulation at various bundle powers

Initial Conditions:

1. The primary side should be filled with water at 0.69 MPa (100 psia) and at 126°C (258°F) [39°C (70°F) subcooling].

2. The steam generator secondary side should be full of water at ambient temperature and at 0.14 MPa (20 psia).

3. The pressurizer should be connected to the crossover leg and should be pressurized with a gas overpressure of 0.85 MPa (123 psia). This pressure compensates for the difference in hydrostatic head between the top of the steam generators and the pressurizer level, and maintains a 0.69 MPa (100 psia) pressure at the highest point in the system. The water level in the pressurizer should be at about 0.61 m (2 ft) and the temperature should be 127°C (258°F).

4. The bundle power controls should be set at 22.2 kw (0.2 percent power) total power.

Procedure:

1. Apply power to the bundle at 22.2 kw.

TABLE 7-1

FLECHT SEASET NATURAL CIRCULATION AND REFLUX CONDENSATION TEST MATRIX

Test Number	Primary Side			Secondary Side					Water Injection			Noncondensible Gas Injection Rate[a]	Test Description
	Pressure [MPa (psia)]	Bundle Power (kw)	Fluid Initial Temperature [C°(°F)]	Pressure [MPa (psia)]	Fluid Temperature [C°(°F)]	Temperature Rise[a] [C°(°F)]	Flow Rate and Condition[a] [m^3/sec (gal/min)]	Liquid Level	Location	Subcooling [C°(°F)]	Rate[a] [kg/sec (lb/sec)]	(SCCM)	
1	0.69 (100)	22.2→66.9→ 111.2→222.4	126 (258)	0.14 (20)	Ambient	39 (70)	$1.3\times10^{-4}\rightarrow1.42\times10^{-3}$ (2.2→22.5) Circulating	Full	-	-	-	-	Single-phase reference test
2	0.69 (100)	222.4 22.2	126 (258)	0.14 (20)	Ambient	39 (70)	1.42×10^{-3} (22.5) Circulating	Full	-	-	-	-	Single-phase, power decay, and constant heat sink effect
3	0.69 (100)	222.4	126 (258)	0.14 (20)	Ambient	39→26 (70→46)	$1.42\times10^{-3}\rightarrow 2.13\times10^{-3}$ (22.5→33.8) Circulating	Full	-	-	-	-	Single-phase, increasing heat sink capacity effect
4	0.69 (100)	222.4	126 (258)	0.14 (20)	Ambient	39→76 (70→137)	$1.42\times10^{-3}\rightarrow 7.07\times10^{-4}$ (22.5→11.2) Circulating	Full	-	-	-	-	Single-phase, decreasing heat sink capacity effect
5	0.69 (100)	222.4	126 (258)	0.14 (20)	Ambient	39 (70)	1.42×10^{-3} (22.5) Circulating	Full	Cold leg	78 (140)	0.757 (1.67)	-	Single-phase, cold leg injection effect
6	0.69 (100)	222.4	126 (258)	0.14 (20)	Ambient	39 (70)	1.42×10^{-3} (22.5) Circulating	Full	-	-	-	4107 for 5 min	Single-phase, noncondensible gas injection effect into both hot legs
7	0.69 (100)	222.4	126 (258)	0.14 (20)	Ambient	39 (70)	1.42×10^{-3} (22.5) Circulating	Full	-	-	-	1020 for 5 min	Single-phase, noncondensible gas injection effect into broken leg only
8	0.69 (100)	222.4	126 (258)	0.69 (100)	Ambient →159(319)	37→6 (70→10)	$1.42\times10^{-3}\rightarrow 1.01\times10^{-2}$ (22.5→160.0) Circulating	Full	-	-	-	-	Single-phase to two-phase to reflux condensation transient test
9	0.69 (100)	222.4	126 (258)	0.10 (15)	Ambient →99(210)	78 (140)	Boiling to dryout and refill	10.7 m 0 (35 ft 0)	-	-	-	-	Single-phase to two-phase to reflux condensation transient test, secondary side effects

a. Nominal values

TABLE 7-1 (cont)

FLECHT SEASET NATURAL CIRCULATION AND REFLUX CONDENSATION TEST MATRIX

	Primary Side			Secondary Side					Water Injection				
Test Number	Pressure [MPa (psia)]	Bundle Power (kw)	Fluid Initial Temperature [C°(°F)]	Pressure [MPa (psia)]	Fluid Temperature [C°(°F)]	Temperature Rise[a] [C°(°F)]	Flow Rate and Condition[a] [m^3/sec (gal/min)]	Liquid Level	Location	Subcooling [C°(°F)]	Rate[a] [kg/sec (lb/sec)]	Noncondensible Gas Injection Rate[a] (SCCM)	Test Description
10	0.69 (100)	222.4	126 (258)	0.10 (15)	Ambient →99 (210)	78 (140)	Boiling at constant level	3/4 full	Upper plenum	78 (140)	0.43 (0.94) for 347 sec	-	Single-phase, two-phase, and reflux condensation transient with UHI simulation
11	0.69 (100)	222.4	126 (258)	0.10 (15)	Ambient →99 (210)	78 (140)	Boiling at constant level	3/4 full	Cold leg	78 (140)	0.76 (1.67)	-	Two-phase, cold leg injection effect
12	0.69 (100)	222.4	126 (258)	0.14 (20)	Ambient	39 (70)	1.4×10^{-3} (22.5) Circulating	Full	Cold leg	78 (140)	0.76 (1.67)	-	Reflux mode, cold leg injection effect to recovery of single-phase mode
13	0.69 (100)	222.4	126 (258)	0.14 (20)	Ambient	39 (70)	1.42×10^{-3} (22.5) Circulating	Full	-	-	-	4107 for 5 min	Two-phase mode, noncondensible gas injection
14	0.69 (100)	222.4	126 (258)	0.10 (15)	Ambient →99 (210)	78 (140)	Boiling	35 Ft Min	-	-	-	-	Single-phase mode, minimum secondary heat sink effect
15	0.69 (100)	222.4	126 (258)	0.14 (20)	Ambient	39 (70)	1.42×10^{-3} (22.5) Circulating	Full	-	-	-	4107 for 5 min	Reflux mode, noncondensible gas injection effects
16	0.69 (100)	222.4	126 (258)	0.14 (20)	Ambient	39→26 (70→46)	1.42×10^{-3}→ 2.13×10^{-3} Circulating	Full	-	-	-	-	Two-phase mode, increased heat sink effect
17	0.69 (100)	222.4	126 (258)	0.10 (15)	Ambient →99 (210)	78 (140)	Boiling broken loop steam generator to dry and refill	10.7→0 m (35→0 ft) Broken loop steam generator to 0 10.7 m (0→35 ft)	-	-	-	-	Two-phase mode, decreased heat sink effect
18	0.69 (100)	222.4	126 (258)	0.14 (20)	94 (200)	6→8 (10→15)	1.01×10^{-2} (160) Circulating	Full	-	-	-	-	Reflux mode, increased heat sink effect
19	0.69 (100)	222.4	126 (258)	0.10 (15)	Ambient →99 (210)	78 (140)	Boiling broken loop steam generator to dry and refill	10.7 0 m (35 0 ft) Broken loop steam generator to 0→ 17 m (0→35 ft)	-	-	-	-	Reflux mode, decreased heat sink effect
20	To be determined												

a. Nominal values

2. At the same time, start circulation in the steam generator secondary side at nominal flow of 1.04×10^{-4} m^3/sec (1.65 gal/min) in the unbroken loop and 3.5×10^{-5} m^3/sec (0.55 gal/min) in the broken loop steam generators. These flows were calculated by assuming a ΔT rise of $39^{\circ}C$ ($70^{\circ}F$) in the cooling water. Adjust flows to maintain approximately $39^{\circ}C$ ($70^{\circ}F$) subcooling at the bundle inlet.

3. Allow the primary side to reach steady state, which is defined as constant primary side flows, constant pressure, and constant bundle inlet temperature.

4. Monitor and record all instrumentation channels during the transient stage at a rate of 1 scan per 0.5 seconds, and during steady-state conditions at a rate of 1 scan per 5 seconds. Measurements of particular interest are primary side flows, system pressure, primary side depletion mass rates, steam generator secondary side flows, temperature distribution throughout the system, and overall system pressure drop.

5. After the system has been operating at steady state for 30 minutes, increase bundle power in small steps up to 66.9 kw (0.6-percent power) over a 30-minute period, and simultaneously adjust the steam generator secondary side cooling water flows to maintain the nominal $39^{\circ}C$ ($70^{\circ}F$) subcooling at the bundle inlet; repeat steps 3 and 4.

6. Repeat step 5 for bundle powers of 111.2 kw (1-percent power) and 222.4 kw (2-percent power).

7-28. Test No. 2 - Single-Phase Natural Circulation as a Function of Bundle Power

Objective:

To determine the effects of reducing bundle power while maintaining a constant heat sink during the single-phase natural circulation mode

Initial Conditions:

1. This test could be a continuation of test no. 1 after the system has been operating at steady state for 15 minutes with constant bundle power at 222.4 kw, constant primary side natural circulation flows, and constant steam generator secondary side cooling water flows.

2. The power controls should be set so that the bundle power can be ramped automatically from 222.4 kw down to 22.2 kw over a period of 60 minutes.

Procedure:

1. Maintain the steam generator secondary side flows constant throughout the power ramp.

2. Observe system behavior during this transient, and in particular, the effect of forming a "cold water plug" in the steam generator primary sides because of excess cooling capacity as the bundle power decreases. This phenomenon could stop, or at least slow down, primary side natural circulation, resulting in a pressure increase in the upper plenum.

3. The test should be terminated if the primary side pressure rises above 1.03 MPa (150 psia), by scramming bundle power and venting system through the letdown valves.

4. Measurements of interest are primary side flows, system pressure and pressure drops, primary side mass inventory changes, pressurizer level or mass inventory changes, temperature distribution through the system, and transient times.

7-29. Test No. 3 - Single-Phase Natural Circulation, Increased Heat Sink Capacity Effect

Objective:

To determine the effect of increasing the heat sink (steam generator secondary side cooling) by 50 percent on the flows required to maintain primary side single-phase natural circulation with a constant bundle power of 222.4 kw (2-percent power)

Initial Conditions:

1. The primary side filled with water at 126°C (258°F) and 0.69 MPa (100 psia)

2. The steam generator secondary sides filled with water at ambient temperature and at a pressure of 0.14 MPa (20 psia)

3. The pressurizer connected to the primary side with a gas overpressure of 0.82 MPa (119.2 psia), and a water level equivalent to half the pressurizer volume

Procedure:

1. Apply about 50 percent of the required power (222.4 kw) to the bundle, and at the same time start circulation on the steam generator secondary sides. Adjust these flows in order to achieve primary side natural circulation and maintain a 39°C (70°F) subcooling at the bundle inlet.

2. Increase power to the bundle in steps until the required 222.4 kw (2-percent power) is reached.

3. Determine the steam generator secondary side flows needed to maintain a 39°C (70°F) subcooling at the bundle inlet. These flows should be the same as those determined in test no. 1 for a bundle power of 222.4 kw.

4. After the system has reached steady state, start proportionally increasing the steam generator secondary side flows in steps until the total flow is 50 percent higher than the total flow determined in step 3, or until the primary side natural circulation is stopped. This increase of cooling flows should take place over a period of 30 minutes at 5-minute intervals. At each step, the flows should be increased by 1.01×10^{-4} m^3/sec (1.69 gal/min) and 3.6×10^{-5} m^3/sec (0.57 gal/min) to the unbroken and broken loop steam generators, respectively. By increasing the steam generator secondary side flows, the primary side temperature will be decreased, resulting in a primary side water volume reduction. Consequently, the pressurizer level should be carefully monitored during this test. Higher heat sink capacity could also cause a cold water plug in the hot legs, stopping natural circulation and resulting in a rapid increase in system pressure.

5. Measurements of interest are primary side flows, system pressure, steam generator secondary side flows, primary side mass inventory changes, pressurizer level or mass inventory changes, temperature distribution throughout the system, and transient times.

7-30. Test No. 4 - Single-Phase Natural Circulation Reduced Heat Sink Capacity Effects

Objective:

To determine the effects of reducing the heat sink capacity (steam generator secondary side cooling) by 50 percent on the flows required to maintain primary side single-phase natural circulation with a constant bundle power of 222.4 kw (2-percent power).

Initial Conditions:

1. This test could be a continuation of test no. 3 after the steam generator secondary side flows have been reduced to normal values needed to maintain primary side single-phase natural circulation with a 39°C (70°F) subcooling at the inlet of the bundle.

2. The pressurizer remains valved into the primary side, but its level should be reduced to about one-quarter full to allow primary water volume expansion because of temperature increases caused by reducing the system heat sink (steam generators) capacity. The pressurizer gas overpressure should be maintained at 0.82 MPa (119.2 psia).

Procedure:

1. Once steady-state single-phase natural circulation operation has been attained with a bundle power of 222.4 kw, start reducing the steam generator cooling water flows in steps down to 50 percent of the starting flow or until the rod bundle exit temperature reaches saturation temperature. The reduction in cooling water flows should take place over a period of 30 minutes at 5-minute intervals. At each step, the flow should be decreased by 1.01×10^{-4} m^3/sec (1.69 gal/min) and 3.6×10^{-5} m^3/sec (0.57 gal/min) to the unbroken and broken loop steam generators, respectively. At this time, two-phase flow may be observed through the upper plenum windows or the hot leg transparent pipe sections.

2. As the steam generators' heat sink capacity is decreased, the primary side temperature will go up, causing liquid volume expansion. This excess volume should be accommodated in the pressurizer volume resulting in a level rise.

3. Measurements of interest are the same as those in test no. 3.

7-31. Test No. 5 - Single-Phase Natural Circulation, Cold Leg Injection Effects

Objective:

To determine the effects of cold leg injection on single-phase natural circulation with constant bundle power of 222.4 kw (2-percent power)

Initial Conditions:

1. This test will be run with a constant mass inventory in the primary side, which means that accumulator no. 2 will be employed to provide the cold leg injection water. Therefore, accumulator no. 2 should be connected to the unbroken cold leg.

2. The system should be operating in a single-phase natural circulation mode similar to the conditions in test no. 3.

3. The steam generator secondary sides should be filled with water at ambient temperature and a pressure of 0.14 MPa (20 psia).

4. Accumulator no. 2 should be connected to the cold leg injection line. This accumulator should be filled with water at 87°C (188°F) [78°C (140°F) subcooling] with a gas overpressure high enough to effectively inject water in the cold leg. The water will be injected at a rate of 0.76 kg/sec 1.67 lb/sec) for about 48 seconds. This volume of water is equivalent to the volume of the unbroken cold leg piping.

5. Bundle power controls should be set initially to about 122.3 kw (55 percent of required power).

Procedure:

1. Apply power to the bundle (122.3 kw) and simultaneously start steam generator secondary side flow.

2. Adjust steam generator secondary flows to maintain 126°C (258°F) at the bundle inlet, and establish steady-state natural circulation.

3. Start increasing bundle power in steps, simultaneously adjusting the steam generator secondary side cooling flows until the system has been operating for 30 minutes with primary side natural circulation, a bundle power of 222.4 kw (2-percent power) and a bundle inlet temperature of 126°C (258°F).

4. Start cold leg injection at a rate of 0.76 kg/sec (1.67 lb/sec). The cold leg injection should last 48 seconds.

5. At the end of the cold leg injection, valve out accumulator no. 1 from the system.

6. Determine system behavior and transient times needed to reach steady state again. Continuously monitor and record primary side flows, temperatures, and pressure, and steam generator secondary side cooling flows and temperatures. If the cold leg injection stalls primary side natural circulation, the bundle rod temperatures may go up rapidly, causing an increase of primary side pressure. Therefore, bundle power should be scrammed on heater rod high temperature, 260°C (500°F), or when the system pressure reaches 1.03 MPa (150 psia).

7. Measurements of interest are cold leg injection flow, primary side flows and pressure, bundle temperatures, steam generator secondary side cooling flows and temperatures, transient times, and system temperature distribution.

7-32. Test No. 6 - Single-Phase Natural Circulation, Effect of Noncondensible Gas Injection Into Both Hot Legs

Objective:

To determine the effect of noncondensible gases on single-phase natural circulation when gases are injected into both hot legs. The gas should be injected in steps at the top of both upper plenum hot leg outlet nozzles. The noncondensible gas will be helium. The amount of helium to be injected on each step is equivalent to the volume of 1.52 m (5 ft) of both steam generator tube bundles (44 tubes). This volume is 4.1×10^{-3} m^3 (0.145 ft^3) at 0.69 MPa (100 psia), of which, 3.9×10^{-3} m^3 (0.109 ft^3) is for the unbroken loop hot leg, and 1.0×10^{-3} m^3 (0.036 ft^3) is for the broken loop hot leg. However, prior to this injection, the water in the primary side should be saturated with helium. About 2.5×10^{-3} m^3 (0.09 ft^3) of helium is needed, based on a primary side volume of 0.8864 m^3 (234.2 gallons) of water at 126°C (258°F).

Initial Conditions:

1. The primary side filled with water at 126°C (258°F) and 0.69 MPa (100 psia)

2. The steam generator secondary sides filled with water at ambient temperature and a pressure of 0.14 MPa (20 psia)

3. The pressurizer (accumulator no. 1) filled with water saturated with helium at 126°C (258°F) to a level of 3.05 m (10 ft) and a helium gas overpressure of 0.82 MPa (119.2 psia)

4. The circulating pump valved into the primary side

5. The bundle power controls set to 122.3 kw

Procedure:

1. Start forced circulation in the primary side.

2. Start injecting helium to the primary side through the upper plenum hot leg nozzle gas injection lines at a rate of 4.2×10^{-6} m^3/sec (0.009 ft^3/min) to the unbroken loop hot leg and 1.2×10^{-5} m^3/sec (0.025 ft^3/min) to the broken loop hot leg for 3 minutes or until the total of 8.5×10^{-3} m^3 (0.3 ft^3) has been injected. Keep circulating for another 10 minutes and take water samples to determine helium concentration of 0.0125 cm^3 (0°C, 1 atm)/g H_2O at 1 atm. Add more helium if necessary.

3. After primary water is saturated with helium, stop and isolate the circulating pump.

4. Apply power to the bundle and start circulation in the steam generator secondary sides to maintain 70°C (158°F) at the bundle inlet.

5. Continue increasing bundle power in steps up to 111.2 kw until single-phase natural circulation steady state has been attained.

6. Valve out the pressurizer.

7. Start helium injection in steps equivalent to the volume (0.004115 m^3 (0.1453 ft^3) of 1.52 m (5 ft) of both steam generators' tube bundles. Of this volume, 0.00309 m^3 (0.109 ft^3) should be injected into the unbroken hot leg at a rate of 3087 cm^3/min for 5 minutes, and 0.0010 m^3 (0.036 ft^3) should be injected into the broken leg at a rate of 1020 cm^3/min for 5 minutes. Allow the primary side to reach steady state after each helium injection. Monitor and record all instrumentation channels, during injection in particular, and during the time to reach steady-state operation.

8. Continue helium injection in steps as specified above until 85 percent of the steam generators are filled with helium, or natural circulation is stopped, or the system pressure reaches 1.03 MPa (150 psia).

9. After each helium injection and after the system has reached steady state, draw samples from the steam generators to determine helium concentration in the primary side water and distribution in the system, and in particular, the axial gas concentration in the steam generator tube bundles. Valve in the pressurizer when samples are being drawn from the system. After sampling has been completed, valve out the pressurizer.

10. Measurements of interest are noncondensible gas injection rates, concentrations, and distribution in the system; primary side flows, pressure, and temperatures; transient times to reach equilibrium or steady-state operation; steam generator secondary side flows, temperatures, and pressures.

7-33. Test No. 7 - Single-Phase Natural Circulation, Noncondensible Gas Injection Effect (Broken Loop Only)

Objective:

To determine the effect of noncondensible gas injection on single-phase natural circulation when injection takes place only into the broken loop with the possibility of incapacitating one of the heat sinks

Initial Conditions and Procedures:

Initial conditions and procedures are the same as those in test no. 6, except that the noncondensible gas is injected only into the upper plenum broken loop hot leg outlet nozzle. The total volume of gas injected per step should be 1.0×10^{-3} m^3 (0.036 ft^3) at a rate of 1020 cm^3/min for 5 minutes.

7-34. Test No. 8 - Single-Phase, Two-Phase, and Reflux Transient Test at Constant Pressure

Objective:

To determine primary side and steam generator secondary side (heat sink) behavior during transient modes of operation from single-phase to two-phase natural circulation to reflux condensation, maintaining the system pressure constant with system variable mass inventory.

Initial Conditions:

1. The primary side should be filled with water at 126°C (258°F) and 0.69 MPa (100 psia). This water should not have any dissolved helium.

2. The steam generator secondary sides should be filled with water at ambient temperature but pressurized to 0.69 MPa (100 psia). This means that the gas overpressure in the expansion tank (containment tank) should be 0.917 MPa (133 psia) with a initial water level of 1.83 m (6 ft).

3. The pressurizer (accumulator no. 1) should have a level of 0.61 m (2 ft) with water at 126°C (258°F) and a gas overpressure of 0.8501 MPa (123.4 psia), and should be connected to the primary side.

4. The power controls should be set initially to provide 111.2 kw to the bundle.

Procedure:

1. Turn on power to the bundle, and at the same time start circulation in the steam generator secondary sides. Adjust cooling flows in order to achieve primary side natural circulation and maintain 39°C (70°F) subcooling at the bundle inlet.

2. Increase power to the bundle in steps until the required 222.4 kw (2-percent power) is reached.

3. Simultaneously adjust steam generator secondary side cooling flows to maintain 39°C (70°F) subcooling at the bundle inlet.

4. After the system has been at steady state for 15 minutes, start decreasing the steam generator secondary side cooling flows in steps. This will reduce the amount of subcooling at the rod bundle inlet. If reducing the secondary side flows is not enough because of the large heat transfer area of the steam generators, start reducing the cooling water to the secondary side heat exchanger. This will start raising the temperature of the secondary side water, and also raise the primary side temperature.

5. As the bundle inlet subcooling decreases (temperature increases), boiling will occur in the bundle and two-phase flow natural circulation should be established. Carefully monitor loop conditions to determine the time at which this mode of natural circulation is achieved. In particular, monitor and measure the primary side mass depletion due to liquid thermal expansion as the temperature increases and due to phase changes when steam generation is started. This mass will go into the pressurizer, causing an increase in level. Mass depletion rates could also be determined by measuring reverse flows in the injection lines with the bidirectional turbine meter. In addition, observe flow regime changes through the upper plenum windows and/or steam generator inlet plenum windows. The bundle, upper plenum, and steam generator inlet plenum differential pressure measurements could also indicate when voids start forming in the primary side.

6. After operation in two-phase natural circulation mode for about 30 minutes, start decreasing the cooling water flow to the steam generator secondary side heat exchanger, and if necessary, decrease the steam generator secondary side flows, until the temperature difference between the primary and secondary sides is about $6^{o}C$ ($10^{o}F$). As the temperature in the primary side increases, approaching saturation, boiling could occur at the top of the steam generator tubes when the lowest system pressure exists. This steam and the steam being generated in the bundle, if any, will eventually displace the water out of the steam generator tubes, steam generator plenums, hot leg, cold leg horizontal runs, upper plenum, and downcomer extension volumes above the hot and cold legs, respectively. The displaced liquid will be going into the pressurizer, raising its level by about 2.3 m (7.4 ft). Voiding of the components mentioned above will cause a reduction in primary side hydrostatic head equivalent to about 0.114 MPa (16.6 psia), which requires a reduction of the pressurizer gas overpressure from the initial pressure of 0.161 MPa (23.4 psia) down to 0.047 MPa (6.8 psia), when taking into account the hydrostatic head induced by the pressurizer raised level. This reduction in pressure is necessary if a 0.69 MPa (100 psia) static pressure is to be maintained at the top of the upper plenum. Since the reduction in hydrostatic head occurs in a transition period, it might be necessary to adjust the pressurizer gas overpressure as the primary side water level decreases during this transient period.

7. Once the reflux condensation mode has been established, adjust system conditions to maintain a water level at 0.61 m (2 ft) below the upper plenum hot leg exit nozzles, and operate the system at steady state for 30 minutes.

8. During this period, measure condensed liquid film flows in the hot and cold legs with the liquid film rotameter system installed in each leg.

9. Measurements of interest are primary side flows, system pressure, system pressure drops; steam generator secondary side flows and temperatures; mass inventory changes in the primary side and pressurizer; temperature changes and distribution throughout the system; transient conditions and times needed to go from one mode of natural circulation to another; time when steam generators start voiding; differential temperatures between secondary side fluid, tube wall, and primary side in the steam generators; liquid film flow, thickness, and velocity during reflux condensation mode; and steam velocities in the hot legs during reflux condensation.

7-35. Test No. 9 - Single-Phase, Two-Phase and Reflux Transient Test with Variable Steam Generator Heat Transfer Area and Recovery

Objective:

To determine the effect of the steam generators' heat transfer area on natural circulation single-phase, two-phase, and reflux condensation modes with boiling in the secondary side until it is completely dried, and then reestablishing secondary side coolant flows (increasing heat transfer area) until primary side single-phase natural circulation is reestablished. The test will be conducted with a variable mass inventory and variable system pressure.

Initial Conditions:

1. The initial conditions are the same as those in test no. 8. The primary side water temperature should be 126°C (258°F at 0.69 MPa (100 psia), the steam generator secondary side should be at atmospheric pressure, and the pressurizer (accumulator no. 1) should have a gas overpressure of 0.7129 MPa (103.4 psia).

2. The steam generator secondary side cooling system expansion tank should be filled with water at 93°C (200°F) with a gas overpressure high enough to inject water in the steam generator secondary sides after they have gone dry. A volume of 0.792 m^3 (28.0 ft^3) is needed. This volume is equal to the combined secondary side volumes of both steam generators. This tank should be valved out initially from the cooling system.

Procedure:

1. Establish single-phase natural circulation as in test no. 8.

2. After steady-state operation for 15 minutes, stop circulation of the steam generator secondary side flows and adjust the water level such that the tubes are just covered with liquid [10.67 m (35 ft)]. The excess water could be drained from the secondary side or vented to the atmosphere as steam.

3. At the initiation of the transient, let the steam generator secondary sides start boiling (evaporative boiling) and either vent the generated steam to the atmosphere or drain the condensibles after the steam has been condensed by the secondary side heat exchanger. It is estimated that the steam generator secondary sides will boil dry in 2.2 hours, including the time needed to heat the water to saturation temperature.

4. Transition to two-phase natural circulation might start about 8 to 10 minutes into the transient. This is the time required to heat the secondary side to saturation, assuming good mixing. At this time, primary side water will near saturation temperature at the bundle inlet and boiling should occur in the bundle. Monitor primary side mass depletion into the pressurizer and adjust pressurizer gas overpressure as the level rises, as indicated in test no. 8.

5. Allow the steam generator levels to decrease and carefully monitor changes in the primary side behavior as the secondary side heat transfer area is decreasing.

6. Determine conditions when the primary side goes into the reflux condensation cooling mode.

7. Determine the effect of losing all the heat transfer area when the steam generator secondary sides boil dry. At this time, the primary side pressure could increase and uncovery of the bundle could occur in about 18 minutes.

8. Start injecting water at 93°C (200°F) into the steam generator secondary sides from the expansion tank as soon as the steam generators boil dry, and determine time needed to reestablish cooling capability. However, if the primary side pressure reaches 1.03 MPa (150 psia) or if the heater rod temperature goes above 260°C (500°F) before steam generator secondary side cooling has been reestablished, scram the bundle power and vent the system through the letdown valves.

9. Continue injecting water in the steam generator secondary sides until full or until circulation can be started. During this period, determine system response and

changes in primary side cooling modes, mass inventories, pressurizer level, primary side flows, system pressure, and pressure drops and temperatures.

10. Continue increasing the steam generator secondary side cooling capacity to evaluate the potential for reduced natural circulation head and loop seal cold water plugging.

11. Measurements of interest are same as those in test no. 8, plus steam generator secondary side water levels to maintain the different modes of natural circulation.

7-36. Test No. 10 - Single Phase, Two-Phase, and Reflux Condensation Transient With UHI Simulation

Objective:

To determine the effect of UHI injection on natural circulation single-phase, two-phase, and reflux condensation modes, during boiling in the steam generator secondary sides. The test will be conducted with a variable mass inventory and variable system pressure.

Initial Conditions:

1. The primary side should be filled with water at 126°C (258°F) and 0.69 MPa (100 psia).

2. Accumulator no. 2 should be used as a UHI injection water supply tank, and should be about three-quarters full with water at 60°C (140°F), and with a gas overpressure high enough to inject water into the upper plenum. The injection line should be connected to the upper plenum pipe penetrations located just above the upper core plate.

3. The steam generator secondary sides should be three-quarters full with water at room temperature. During the test, the secondary side will be operating as an evaporative heat exchanger with a relatively constant water level. The steam being generated would be condensed by the secondary side heat exchanger and

returned to the secondary side to maintain a constant level. In this case the, secondary side circulation pump would not be in operation.

4. Accumulator no. 1 should be used as a pressurizer and should have a level of 0.61 m (2 ft) with water at 126°C (258°F) and a gas overpressure of 0.848 MPa (123 psia).

Procedure:

1. Establish single-phase natural circulation as in test no. 8 with 222.4 kw of bundle power.

2. After operation at steady state for 15 minutes, start the UHI injection at a rate of 0.43 kg/sec (0.94 lb/sec) for 347 seconds.

3. At the end of UHI injection, isolate accumulator no. 1 from the system primary side and carefully monitor the effect of the UHI water injection on the single-phase natural circulation mode. It is postulated that UHI injection might stop or at least slow down the natural circulation flow until the subcooled UHI water mixes with the system water and natural circulation is reestablished. During this period, this system pressure may start increasing. If it reaches 1.03 MPa (150 psia), scram power and depressurize the system by activating the letdown valves.

4. When the system pressure is down to 0.69 MPa (100 psia), valve in accumulator no. 1 and start applying power to the bundle again.

5. Reestablish single-phase natural circulation and continue adjusting the steam generator secondary side conditions until two-phase flow natural circulation is established with a bundle power of 222.4 kw. The steam generator secondary sides can be adjusted by lowering the water level, which in effect reduces the heat sink effective heat transfer area and results in an increase of primary side water temperature until boiling occurs in the steam generator tubes, hot legs, upper plenum, and bundle.

6. After operating for 15 minutes in a two-phase natural circulation mode, valve out accumulator no. 2 (pressurizer) and start UHI injection at a rate of 0.43 kg/sec (0.94 lb/sec) for 347 seconds.

7. Observe the effects of UHI injection by monitoring system pressures, temperature and flow changes, mass inventory changes, and transient times. As in the single-phase natural circulation case, UHI injection might stop the two-phase natural circulation or at least slow it down.

8. Continue monitoring the system until some mode of natural circulation is reestablished or the system pressure reaches 1.03 MPa (150 psia). At this point, scram bundle power and reduce primary side pressure through the letdown valves.

9. When the system pressure is down to 0.69 MPa (100 psia), valve in accumulator no. 1 (pressurizer), and turn on power to the bundle until the 222.4 kw power level is reached.

10. Adjust level in the steam generator secondary sides until reflux condensation mode is established in the primary side, as described in test no. 8, step 6.

11. After steady-state operation in the reflux mode for 15 minutes, valve out accumulator no. 1 (pressurizer) and start UHI injection at a rate of 0.43 kg/sec (0.94 lb/sec) for 347 seconds.

12. Observe the effects of UHI injection by monitoring system pressures, temperature and flow changes, mass inventory changes, and transient times. As in the case of two-phase natural circulation, UHI injection might stop the reflux condensation mode or at least change it into the two-phase natural circulation mode.

13. In any case, continue monitoring the system until more natural circulation is reestablished or the system pressure increases to 1.03 MPa (150 psia). At this point, scram bundle power and reduce primary side pressure through the letdown valves.

14. Measurements of interest are same as those in test no. 8 plus effects of UHI injection on the natural circulation modes.

7-37. Test No. 11 - Two-Phase Natural Circulation, Cold Leg Injection Effects

Objective:

To determine the effects of cold leg injection on two-phase natural circulation during boiling in the steam generator secondary sides. The test will be conducted with a variable mass inventory and variable system pressure.

Initial Conditions:

Initial conditions are the same as those in test no. 5 except for the secondary side of the steam generators, which should be operated as evaporative coolers (boiling mode) and should be initially about three-quarters full with water as in test no. 10.

Procedure:

1. Establish two-phase flow natural circulation in the primary side by adjusting the boiling level in the steam generator secondary sides as in test no. 10.

2. After the system has been operating at steady-state two-phase flow conditions for 15 minutes, isolate accumulator no. 1 (pressurizer) from the primary side and start cold leg injection at a rate of 0.76 kg/sec (1.67 lb/sec) for 48 seconds.

3. Determine the system behavior by monitoring system pressures, pressure drops, temperatures, flow changes, mass inventories, and steam generator secondary side levels, temperatures, and pressures.

4. The cold leg injection might stop the two-phase natural circulation by either collapsing the voids in the primary side or forming a cold water plug in the steam generator outlet and cold legs. In either case, continue operating the system until a natural circulation mode is reestablished or the pressure in the system increases

to 1.03 MPa (150 psia). At this point, scram bundle power and let down primary side system pressure through letdown valves.

5. Measurements of interest are the same as those in tests no. 5 and no. 10.

7-38. Test No. 12 - Reflux Mode, Cold Leg Injection Effect to Recovery of Single-Phase Natural Circulation Mode

Objective:

To determine the effect of cold leg injection during reflux condensation mode until single-phase natural circulation mode is reestablished

Initial Conditions:

Initial conditions are the same as those in test no. 5. However, if in test no. 8 it is determined that it takes a long period of time to establish the reflux condensation mode when starting with a liquid-full system, this test could be started with the system partially full of water at about 126°C (258°F) at 0.69 MPa (100 psia). The water level in the bundle and the downcomer should be at 0.61 m (2 ft) below the hot leg nozzles, and the pump loop seal piping should be filled to the top of the uphill vertical legs. The rest of the primary side volume should be filled with saturated steam at 0.69 MPa (100 psia). The steam generator secondary sides should be filled with water at 114°C (238°F) and pressurized to 0.69 MPa (100 psia) or higher if needed to provide the proper net positive suction head (NPSH) to the circulating pumps.

Procedure:

1. If the system is initially full of water, follow the procedures in test no. 8 until the reflux mode is established.

2. If the test is initiated with the primary side partially filled with water, start applying power to the bundle at a low value, and increase power and adjust the steam generator secondary side flows until the 222.4 kw power level is reached and

the system is operating in the reflux condensation mode. In this case, accumulator no. 1 does not need to be valved into the system and used as a pressurizer.

3. After the system has been operating at a steady state for 15 minutes, start cold water injection at a rate of 0.76 kg/sec (1.67 lb/sec) until single-phase natural circulation is established or the primary side pressure reaches 1.03 MPa (150 psia). At this point, power to the bundle should be scrammed, the secondary side flow could be increased and its temperature lowered, or the primary side pressure could be let down through the letdown valves.

4. Measurements of interest are the same as those in tests no. 5 and no. 10, including transient times to reach single-phase natural circulation, measurements of primary flows, and in particular, observation and measurement of possible flow reversals caused by the cold leg injection.

7-39. Test No. 13 - Two-Phase Natural Circulation, Noncondensible Gas Injection Effects

Objective:

To determine the effects of noncondensible gas injection into the primary side when it is operating in two-phase flow circulating mode

Initial Conditions:

Initial conditions are the same as those for test no. 6.

Procedure:

The procedure is the same as that in test no. 6 except that noncondensible gas injection should not start until the system has been operating in the two-phase flow mode for 15 minutes and the pressurizer has been isolated from the primary side.

Measurements of interest are the same as those in test no. 6.

7-40. Test No. 14 - Single-Phase Natural Circulation with Minimum Secondary Side Heat Sink

Objective:

To determine the minimum boiling level in the steam generator secondary sides to maintain primary side natural circulation with a bundle power of 222.4 kw

Initial Conditions:

Initial conditions are the same as those in test no. 9.

Procedure:

The procedure is the same as that in test no. 9 except that the steam generator secondary side boiling level should be lowered to the minimum height required to maintain primary side single-phase natural circulation at steady state for at least 15 minutes. The test could be terminated by scramming bundle power and increasing boiling level in the steam generator secondary side.

Measurements of interest are the same as those in test no. 6.

7-41. Test No. 15 - Reflux Mode, Noncondensible Gas Injection Effects

Objective:

To determine the effects of noncondensible gas injection during the primary side reflux condensation mode

Initial Conditions:

Initial conditions are the same as those in tests no. 6 and no. 13.

Procedure:

The procedure is the same as that in test no. 6 except that noncondensible gas injection starts when the primary side has been operating in the reflux mode for 15 minutes and the pressurizer has been isolated from the system. The test is terminated when the primary side system pressure reaches 1.03 MPa (150 psia). At this point, the bundle power should be scrammed, the steam generator secondary side cooling flows should be increased, and the primary side pressure should be decreased by venting through the letdown valves.

Measurement of interest are the same as those in tests no. 6 and no. 13.

7-42. Test No. 16 - Two-Phase Flow Natural Circulation, Heat Sink Increase Effect

Objective:

To determine the effect of increasing the heat sink capability by 50 percent on the two-phase flow natural circulation mode. This test will be conducted with a primary side constant mass inventory and variable pressure.

Initial Conditions:

Initial conditions are the same as those in test no. 3.

Procedure:

The procedure is the same as that for test no. 3 except that increasing of the steam generator secondary side flows should not start until the primary side has been operating in steady-state two-phase flow mode for at least 15 minutes with a bundle power of 222.4 kw, and the pressurizer has been isolated from the system. By increasing the heat sink capacity, the primary side voids could be collapsed and the fluid temperature could be decreased to a situation where a cold water plug could be formed and stop the two-phase flow natural circulation; this could induce an increase in primary side pressure. The test should be terminated when the primary side system

pressure reaches 1.03 MPa (150 psia). At this point, the bundle power should be scrammed, and the system pressure should be decreased by activating the letdown valves.

Measurements of interest are the same as those in test no. 3.

7-43. Test No. 17 - Two-Phase Flow Natural Circulation, Heat Sink Reduction Effect

Objective:

To determine the effect of reducing the heat sink capability (heat transfer area) on two-phase natural circulation with boiling in the secondary side of both steam generators and allowing the broken loop steam generator secondary side to boil dry and recover. This condition could cause an imbalance in the system heat removal capabilities with the possibility of flow reversals in the broken loop.

Initial Conditions:

Initial conditions are the same as those in test no. 9.

Procedure:

1. Establish two-phase natural circulation as in test no. 9, with boiling in both steam generator secondary sides maintaining a constant boiling level.

2. After the system has been operating at steady state for 15 minutes, isolate the broken loop steam generator secondary side and allow it to boil dry, and at the same time maintain a constant boiling level in the unbroken loop steam generator secondary side.

3. As the transient progresses, carefully monitor primary side flows, temperatures, and pressures. The reduction of heat transfer area could cause a temperature rise in the primary side accompanied by a pressure increase, a reduction in flow in the broken loop, and eventually, a flow stoppage and/or flow reversal. Another possibility is that the unbroken loop flow could increase in an attempt

to compensate for the loss of flow in the broken loop. In this case, the unbroken loop steam generator could remove all the heat load and could sustain the two-phase flow natural circulation mode.

4. After the broken loop steam generator secondary side has boiled dry, start injecting water at 93°C (200°F) from the expansion tank until a constant boiling level is attained to reestablish steady-state two-phase natural circulation in the primary side of this steam generator. During this transient, carefully monitor primary side flow pattern changes and unbroken loop steam generator behavior.

5. The test could be terminated if

   a. The system pressure increases to 1.03 MPa (150 psia), in which case the bundle power should be scrammed, and the system pressure should be reduced by venting through the letdown valves

   b. After 30 minutes the broken loop steam generator has boiled dry and the large steam generator can maintain steady-state two-phase natural circulation with a system pressure below 1.03 MPa (150 psia).

7-44. Test No. 18 - Reflux Condensation Mode, Heat Sink Increase Effect

Objective:

To determine the effects of increasing the heat sink capability by 50 percent on the reflux condensation mode. This test will be conducted with a primary side constant mass inventory and variable pressure.

Initial Conditions:

Initial conditions are the same as those in tests no. 8 and no. 16.

Procedure:

1. Establish the reflux condensation mode as in test no. 8, with boiling in both steam generator secondary sides maintaining a constant level.

2. Follow the same procedure as in test no. 16.

7-45. Test No. 19 - Reflux Condensation Mode, Heat Sink Reduction Effect

Objective:

To determine the effects of reducing the heat sink capability (heat transfer area) on the reflux condensation mode, with boiling in the secondary side of both steam generators and allowing the broken loop steam generator secondary side to boil dry and then to recover.

Initial Conditions:

Initial conditions are the same as those in tests no. 9 and no. 17.

Procedure:

1. Establish the reflux condensation cooling mode as in test no. 9, with boiling in both steam generator secondary sides maintaining a constant level.

2. Follow the same procedures as in test no. 17.

7-46. Test No. 20

Conditions for this test will be determined based on the results of all previous tests.

SECTION 8

DATA REDUCTION, ANALYSIS, AND EVALUATION PLANS

8-1. NATURAL CIRCULATION AND REFLUX CONDENSATION DATA REDUCTION

The bundle, components, and system instrumentation are designed to provide sufficient data for the following purposes:

-- To perform mass and energy balances around each component, the entire system, and the steam generator secondary side cooling system

-- To identify cooling modes occurring during natural circulation

-- To determine the natural circulation flow rates as a function of bundle power

-- To determine bundle mass storage rates, axial void fractions, and exit conditions for the natural circulation two-phase cooling modes

-- To provide mass storage rates in the upper plenum, steam generator plenums, and other loop components, for the two-phase flow tests

-- To determine whether nonequilibrium conditions exist in the upper plenum, steam generator, and loop components

-- To quantify the steam generator secondary side behavior as a heat sink during natural circulation cooling modes

-- To investigate the stability of the different natural circulation cooling modes and the transition between cooling modes

-- To identify the two-phase flow regimes occurring during the experiments in the upper plenum, hot legs, and steam generator inlet and exit plenums

-- To determine countercurrent stratified flows in the hot legs during the reflux condensation cooling mode

-- To determine primary side system behavior during the loss and/or recovery of the heat sink during natural circulation cooling modes

-- To determine system transient behavior during simulated cold leg and upper head injection

-- To determine the effect of noncondensible gases in the steam generators during various natural circulation cooling modes

The data acquisition, control, and processing system as configured for natural circulation and reflux condensation testing is described in paragraph 6-19. Paragraph 6-41 explains the data validation criteria and procedures. Brief descriptions, including identification of main function and outputs, of the computer codes to be used in reducing and analyzing natural circulation and reflux test data are given in table 8-1. The computer codes named in table 8-1 are essentially new codes; little of the data reduction and analysis software previously developed for any of the FLECHT-type programs was applicable to the current program for three reasons:

-- The new data acquisition, control, and processing system generates a data tape file structure that is significantly different from that of the previous system. This necessitated a rewrite of the CATALOG routine.

-- The operation of the systems effect test (SET) facility in a natural circulation and reflux condensation cooling mode necessitated writing a mass and energy balance code that would account for such factors as water-solid primary loops, long-term energy loss to the ambient by primary piping, steam generator secondary side boiling dry, and ECC injection into both the cold leg and the test vessel upper plenum (UHI).

-- The use of differentially connected fluid-to-wall thermocouples, coupled with a revision of the computation procedures associated with the reduction of steam generator data, resulted in new steam generator data reduction and analysis coding.

TABLE 8-1

DATA ANALYSIS AND REDUCTION CODES

Code	Primary Function	Output	Units	
			Metric	English Engineering
CATALOG	Reads data tape generated at the experiment site and creates a data file for use on the PSCC scientific computer	Computer file in form for use as input to other data reduction codes; tabular listing of test data and time in engineering units		
		Time	sec	sec
		Temperature	^{o}C	^{o}F
		Pressure	MPa	psia
		Differential pressure	MPa	psig
		Flow	m^3/sec	gal/min
		Power	kw	kw
NCPLOT	Plots each data channel as a function of test run time	Same tabular output as CATALOG, plus curves	Same as CATALOG	Same as CATALOG
NCXPLOT	Plots data from various tests on the same axis (cross-plotting of data)	Plotted curves	Same as CATALOG	Same as CATALOG
NCMEBAL	Calculates overall mass and energy balances	One-phase and two-phase pressure	MPa	psig

TABLE 8-1 (cont)

DATA ANALYSIS AND REDUCTION CODES

Code	Primary Function	Output	Units	
			Metric	English Engineering
NCMEBAL (cont)		Void fraction	-	-
		Steam quality	-	-
		Two-phase density	kg/m^3	lbm/ft^3
		Mass storage in loop components	kg	lbm
		Mass balance	-	-
		Saturation line in bundle	m	ft
		Flow rates		
		-- Cold legs	kg/sec	lbm/sec
		-- Crossover pipes	kg/sec	lbm/sec
		-- ECC injection	kg/sec	lbm/sec
		Energy balance		
		-- Bundle energy input	kw	Btu/hr
		-- Primary loop losses to ambient	kw	Btu/hr
		-- Secondary loop losses to ambient	kw	Btu/hr
		-- Secondary loop storage effects	kw	Btu/hr
		-- Heat gain by secondary side fluid	kw	Btu/hr

TABLE 8-1 (cont)

DATA ANALYSIS AND REDUCTION CODES

Code	Primary Function	Output	Units	
			Metric	English Engineering
3SGTEMP	Reads CATALOG and performs interpolation of steam generator temperature data	Time Temperature Position Flow	sec ^{o}C m kg/sec	sec ^{o}F ft lbm/sec
SGFLUX	Employs SGTEMP output to calculate local heat fluxes in steam generators	Time Reynolds numbers Prandtl numbers Film coefficients Heat fluxes	sec w/m^2-^{o}C w/m^2	sec Btu/sec-ft^2-^{o}F Btu/sec-ft^2

To facilitate understanding the purposes of the data reduction and analysis codes and how these codes support the test objectives, the desired basic test data are listed in table 3-1, and the desired reduced data are given in table 8-2. The logical sequencing of the data reduction and evaluation computer codes is shown in figure 8-1.

The purposes of the mass and energy balance code for the natural circulation test facility (NCMEBAL) are as follows:

-- To calculate local (component) and system (loop) mass balances

-- To calculate local (component) and system (loop) energy balances

The code will use loop geometry data and initial condition data to estimate initial liquid mass inventory of each of the primary loop components; the initial component mass inventory estimates will be summed to give an initial loop mass inventory estimate. The mass inventory of the primary loop will be calculated for each time during the test that data are collected; this inventory will be compared to the initial mass inventory. Metered ECC injection flow, when applicable, will be compared to primary loop increase in mass inventory.

A primary-to-secondary side energy removal rate will be calculated using primary loop test data. Included in the calculation will be component-by-component heat storage rates and losses to ambient. A secondary side energy gain, including steam generator energy storage effects, will be calculated and compared to the aforementioned primary-to-secondary side energy removal rate as an overall facility energy balance.

During two-phase natural circulation and reflux condensation operation, estimates of the following quantities made using collected test data:

-- The saturation line within the bundle

-- Local steam quality at various locations in the test vessel upper plenum, hot legs, and steam generator inlet plena

TABLE 8-2

INFORMATION DERIVED FROM BASIC

FLECHT SEASET NATURAL CIRCULATION AND REFLUX CONDENSATION TEST DATA

Derived Thermal-Hydraulic Quantity	Method Used - Code	Location
Primary loop mass balance	Summation of mass stored in loop components - NCMEBAL	Each component using appropriate instrumentation
Primary loop energy balance	Energy input to bundle compared to energy losses of loop - NCMEBAL	Each component using appropriate instrumentation
Secondary side energy gain	Calculation of either mass flow or boiloff rates - NCMEBAL	Temperature rise across steam generators, flow measured at steam generator inlets
Primary to secondary side energy balances	Comparison of heat lost to steam generator by primary loop to heat gained by steam generator liquid - NCMEBAL	Broken and unbroken loop steam generators
Quality at steam generator tubesheets	Calculation of local quality at bundle exit, accounting for pressure drops around loop to steam generator tubesheet - NCMEBAL	Bundle exit, across hot leg piping and steam generator plenum
Bundle saturation line	Energy balance on bundle - NCMEBAL	Along the bundle heated length

TABLE 8-2 (cont)

INFORMATION DERIVED FROM BASIC

FLECHT SEASET NATURAL CIRCULATION AND REFLUX CONDENSATION TEST DATA

Derived Thermal-Hydraulic Quantity	Method Used - Code	Location
Flow regimes	Photographs and appropriate data	Test vessel upper plenum, steam generator nodal plenum
Steam generator film coefficients and heat fluxes	SGFLUX	Designated steam generator nodal positions

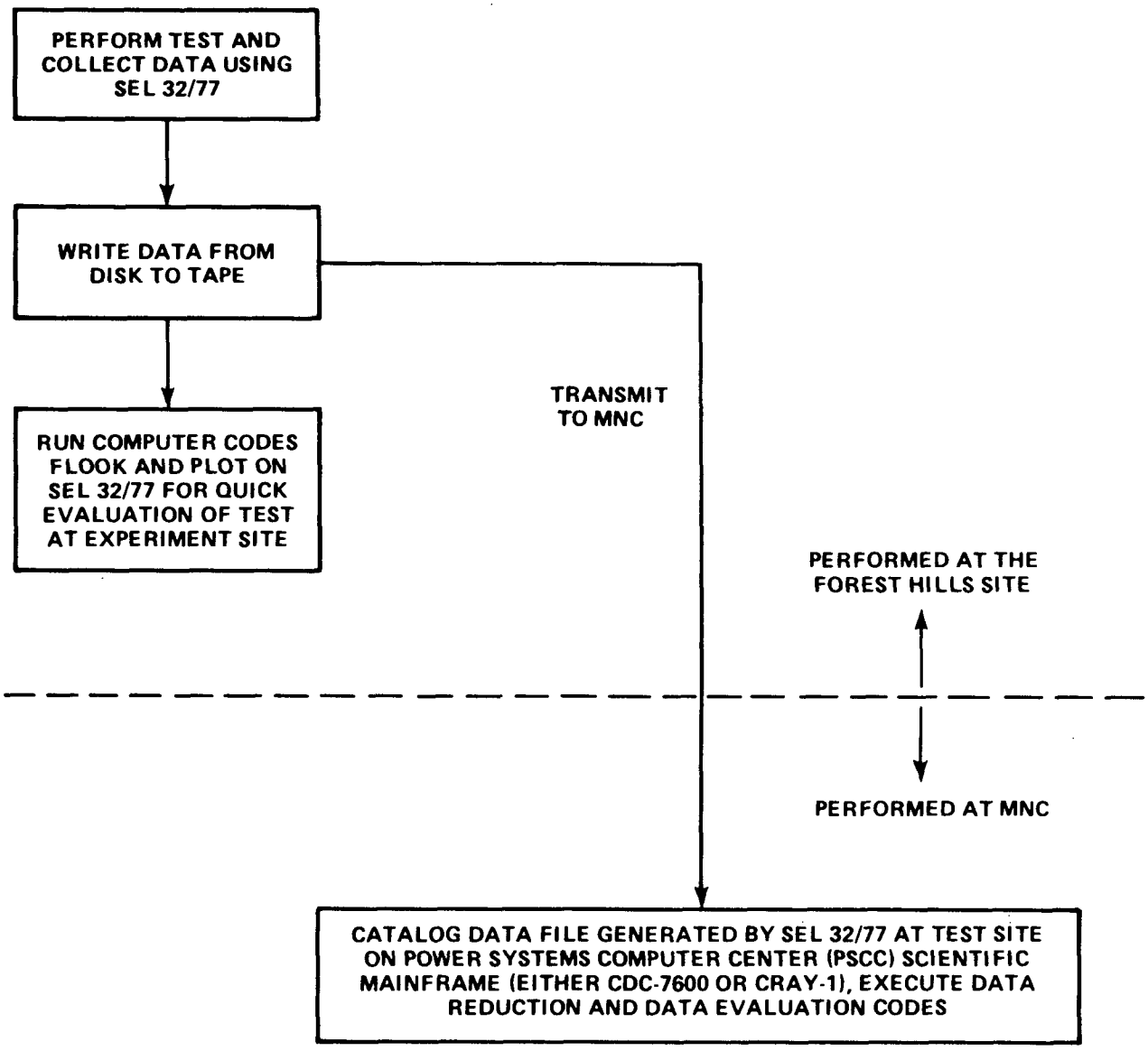

Figure 8-1. Logical Sequencing of Computer Codes

-- Rate of condensation of vapor in the primary loop hot legs due to heat storage effects and heat losses to the ambient

The above named variables, as well as flowrates, system mass balance, system energy balance, and other selected parameters were displayed in both graphical and tabular output forms.

8-2. DATA ANALYSIS AND EVALUATION

The test data will be evaluated to determine the effects of various system parameters on the natural circulation and reflux heat transfer performance of the SET facility. The parameters considered include bundle power, primary side pressure, loss of secondary side heat sink, injection of noncondensible gases, and cold leg and upper plenum (UHI) ECC injection. These tests will serve a twofold purpose: to provide a better understanding of the systems behavior associated with the natural circulation and reflux condensation phenomena, and to provide a data base for an improved steam generator performance model.

During natural circulation testing, the primary loops operated in one of the following cooling modes: one-phase natural circulation, two-phase natural circulation, or reflux condensation. During a given test, the operating conditions within the primary loop could vary over two or all three of the aforementioned operating cooling modes. During the two-phase and reflux condensation cooling modes, flow regimes were recorded using high-speed motion picture cameras and enhanced photographic techniques. These data were recorded at the test section upper plenum and at the inlet plena to the steam generator simulators.

8-3. PREDICTIVE MODEL FOR FLECHT SEASET NATURAL CIRCULATION TESTS

The objectives of the natural circulation predictive model are to predict the transient flow (single-phase and two-phase) properties in various loop components of the natural circulation test facilities and the overall heat transfer behavior in the steam generator U-tubes. The model is expected to be applicable to all intended operating cooling modes of the natural circulation tests including single-phase tests, two-phase tests, reflux condensation tests, and tests with water or helium gas injection.

For all intended operating cooling modes of the natural circulation tests, the bundle core was covered by subcooled or boiling water (that is, no heater rod dryout was anticipated). Hence the core heat release can be well approximated by the heater rod power. Also, once the loop component surface temperature and insulation surface temperature were measured, the component heat loss could readily be calculated by a simple conduction model. Since similar calculations have been performed in the mass and energy balance program described in paragraph 8-1, to avoid redundancy of effort the core heat release and component heat loss were input from the results of the mass and energy balance program.

One-dimensional, two-phase, three-field (liquid water, steam, and helium gas) conservation equations (mass, energy, and momentum conservations) will be developed. The conservation equations are supplemented with drift-flux relations, flow regime maps, heat transfer correlations in the steam generator U-tubes, and equations of state. A literature survey will be conducted to determine the most appropriate models for these supplementary equations and correlations.

The conservation equations are approximated by implicit finite difference equations. The finite difference equations developed are in general nonlinear; hence an iterative technique will be employed to solve these equations and to calculate the flow split between the broken and intact loops and the flow split in the steam generator U-tubes. A computer code FSNCP (FLECHT SEASET Natural Circulation Predictions) will be developed to perform these calculations.

Finally, the predictions will be compared with the natural circulation data and data-based quantities in order to verify the model and to identify areas where model improvements are required.

SECTION 9

TASK SCHEDULE

Table 9-1 is a list of the major milestones for this task. It is expected that the final combined data and data analysis and evaluation report will be published by March 15, 1983.

TABLE 9-1

FLECHT SEASET SYSTEM EFFECTS TASK
MAJOR MILESTONES

Milestone Number	Milestone	Months After Contract Start Date (7/1/77)	Calendar Date
E1	Initiate test planning and facility modification design study	14	9/1/78
E2	Issue draft task plan for review	22.5	5/15/79
E3	Complete facility design and major procurement	43	2/1/81
E4	Complete facility modification and initiate shakedown testing	49.5	8/24/81
E5	Complete shakedown testing	56.5	3/15/82
E6	Complete testing	59.5	6/15/82
E7	Complete combined draft data and data analysis and evaluation report	66.5	3/15/83

APPENDIX A

WORK SCOPE

The following work scope details the objective and subtasks of FLECHT SEASET Task 3.2.7, Systems Effects Task.

OBJECTIVE

Obtain and evaluate data on the effects of bundle, component, and system parameters upon reflood, natural circulation, and reflux condensation thermal-hydraulic behavior in systems effects tests.

SCOPE

1. Perform a design modification study of the FLECHT-SET facility that includes consideration of:

   a. The AEC Task Force report on FLECHT-SET Phase B (ref: report transmitted from H. Sullivan to S. Hanauer, V. Stello, R. Smith, and L. S. Tong, "FLECHT-SET Report," April 18, 1974)

   b. The results of a study to further understand two-phase separation, entrainment, and liquid fallback mechanisms in PWR upper plenums. This study will include performing a literature search and analytical scaling studies to examine two-phase separation, entrainment, and fallback mechanisms. Scoping experiments will be recommended and, if necessary, performed to support this study. A scaling rationale for the FLECHT SEASET upper plenum will be developed by considering the following:

      1) The results of the literature search and the scaling studies

      2) The FLECHT SEASET system scaling constraints

c. Redundant instrumentation, such as gamma densitometers, liquid level detectors, and Storz lenses

d. Provision for testing the effects of noncondensibles on natural circulation and reflux condensation system behavior

e. Single-phase, two-phase, and reflux boiling (condensation) natural circulation systems effects tests with upgraded steam generator instrumentation and feedwater flow capability

2. Modify the existing FLECHT-SET facility to include the changes mutually agreed to by the PMG after review of the Task Plan.

3. Procure and install instrumentation to determine the bundle inlet flow rates, bundle axial void fraction and fluid mass storage, bundle energy balance, upper plenum mass storage, nonequilibrium conditions at bundle and steam generator exits (using steam probes), steam generator heat release rates, steam generator tube wall temperatures, steam generator secondary side temperatures and flows, system energy and mass balance, and system fluid distribution.

4. Design, procure, and instrument a bundle that includes heater rods and a housing.

5. Perform system calibration, instrumentation calibration, facility checkout, and facility shakedown tests.

6. Perform natural circulation and reflux condensation tests to investigate the effects of bundle, component, and system parameters on the system thermal-hydraulic behavior.

7. Review and validate the data.

8. Reduce the data to obtain derived quantities such as bundle inlet flow rates, inlet fluid enthalpy, system pressures and pressure drops, steam generator behavior as a heat sink, amount of two-phase separation in the various system components, and the system mass and energy balances.

9. Process and store transducer data on computer tape.

10. Prepare a combined data and data evaluation and analysis report for the natural circulation and reflux condensation systems effects tests, including uncertainty estimations for both data and derived thermal-hydraulic quantities.

11. Identify the two-phase flow regimes occurring during two-phase natural circulation using photographic methods and other appropriate data. Where possible, identify the heat transfer regimes and mechanisms that occur within the steam generator and system and compare to existing heat transfer correlations. If necessary and possible, propose improved heat transfer correlations in the steam generator. Compare the natural circulation test flows with simple lumped parameter models of the system.

12. Evaluate the following:

    a. Stability of the system with different modes of natural circulation and reflux condensation

    b. Effects of different bundle, component, and system parameters on natural circulation and reflux condensation heat transfer

    c. Similarity between FLECHT-SET, Semiscale and, if available, the Kraftwerk Union 340-rod experimental data

    d. The flow regimes that exist in various system components using movies, photographs, and appropriate data

13. Develop a predictive model using a drift flux formulation to predict the natural circulation experiments.

APPENDIX B

FLOW RESISTANCE CALCULATIONS

Flow resistance coefficient calculations were made in the FLECHT SEASET systems effects reflood and natural circulation test facility as part of the original scope in this task. The purpose of these calculations was to size the total loop resistance of the test facility to those values representative of a Westinghouse four-loop PWR (SNUPPS plant with Model F steam generators). Table B-1 summarizes these results. The flow resistance coefficient calculations were based on the hot leg dynamic head. The cold leg coefficients were corrected by the ratio of the hot leg to the cold leg densities during reflood.

As discussed in section 4, the scaling of the FLECHT SEASET systems effects test components and loop piping were based on the ratio of the PWR core flow area to the flow area of the 161-heater-rod bundle, resulting in a scaling factor of 307. The system elevations and loop piping lengths were preserved as closely as possible. Figures B-1 and B-2 show the plan view and the elevation view, respectively, of the reflood test facility, including loop piping lengths and elevations referenced to the bottom of the rod bundle heated length.

TABLE B-1

SUMMARY OF FLECHT SEASET SYSTEMS EFFECTS REFLOOD TEST RESISTANCE CALCULATIONS

Component	Flow Resistance Coefficient K[a]	
Unbroken loop (upper plenum to downcomer)	PWR	FLECHT SEASET Facility
Hot leg	0.31	2.48
Steam generator	7.88[b]	8.39[b]
Pump loop seal	21.68[b]	13.00[b,c]
Cold leg	1.18[b]	7.17[b]
Broken loop (upper plenum to containment)		
Hot leg	0.31	3.81
Steam generator	7.88[b]	3.81[b]
Pump loop seal	21.68[b]	11.89[b,c]
Cold leg	0.22[b]	6.02[b]
TOTAL	30.09	30.08
Crossover leg	11.68	11.27[d]

a. All resistance coefficients are referenced to the hot leg dynamic head.

b. Corrected for density difference between cold leg (superheated steam) and hot leg (steam-water mixture)

c. Includes flow resistance orifice plate values to make total loop resistance equal to that of a PWR

d. Includes bottom of downcomer, lower plenum, bidirectional turbine meter, and flexible hose

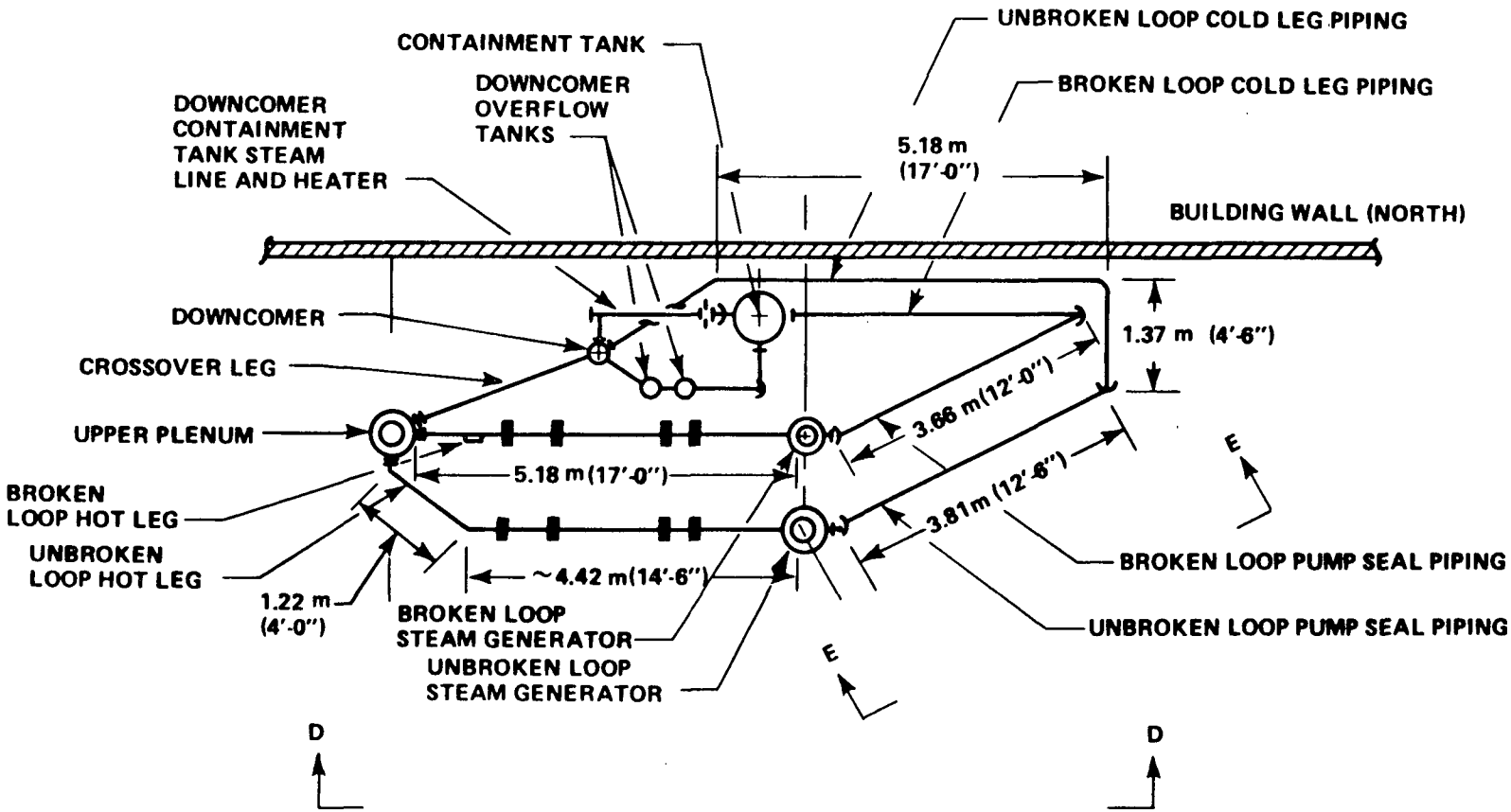

Figure B-1. FLECHT SEASET Systems Effects Test Loop Plan View

20616-34

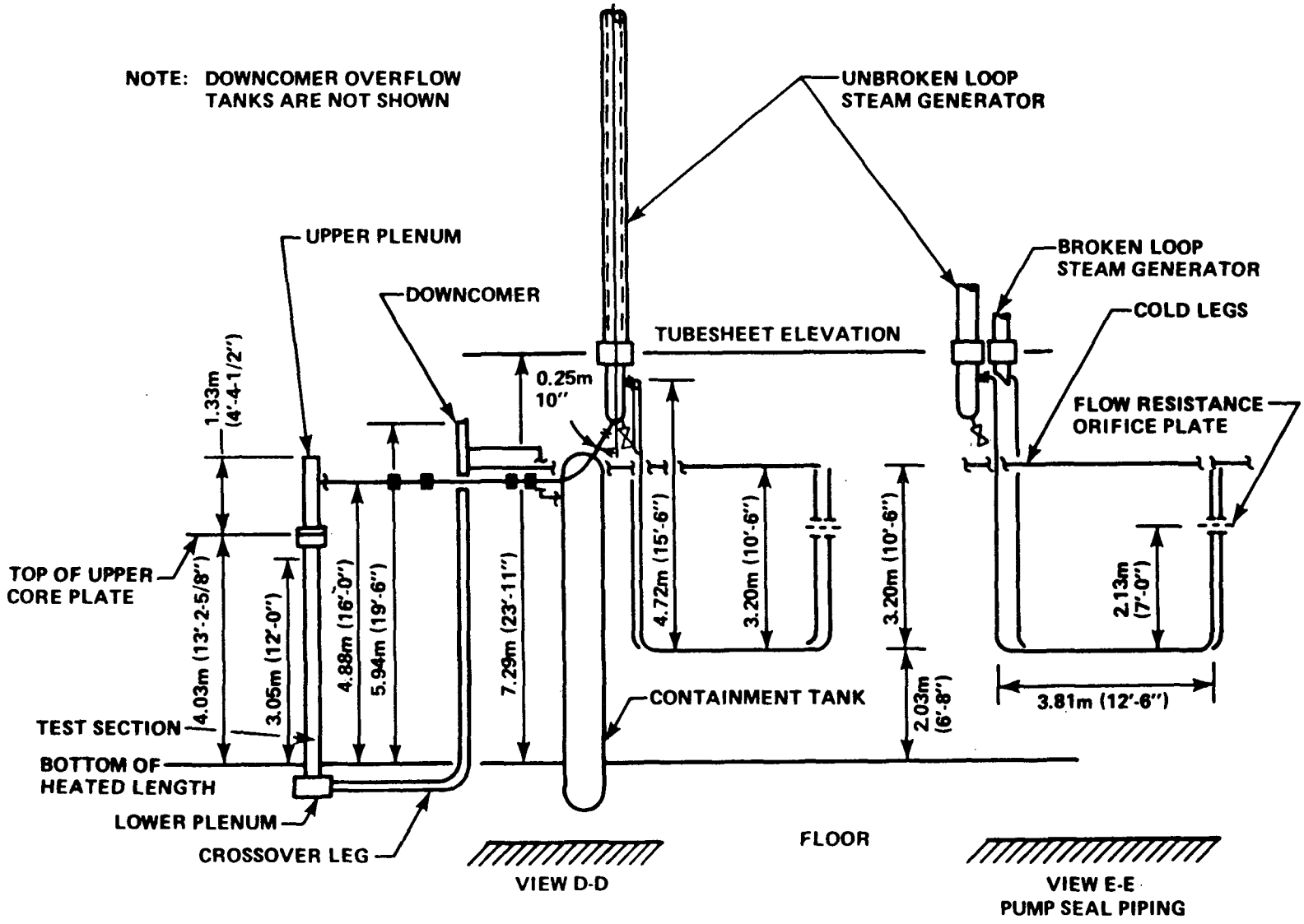

Figure B-2. FLECHT SEASET Systems Effects Test Loop Elevation View

APPENDIX C

REVIEW OF TEST PARAMETER RANGES

Correspondence with Combustion Engineering, Babcock and Wilcox, Exxon, and EG&G regarding test parameter ranges for reflood experiments is reproduced on the following pages.

This information is included in this task plan to fulfill a commitment made in the original scope of the system effects task, although it is not pertinent to the natural circulation tests.

Combustion Engineering, Ir
1000 Prospect Hill Road
Windsor, Connecticut 06095

Tel. 203 688-1911
Telex. 9-9297

COMBUSTION ENGINEERING

November 30, 1977

Mr. H. W. Massie
FLECHT-SEASET Project Engineer
Westinghouse Electric Corporation
Box 355
Pittsburgh, Pennsylvania 15230

Dear Mr. Massie:

In response to your letter of October 12, 1977 I have enclosed comments on the proposed FLECHT-SEASET program. Note that the best estimate conditions listed in the attached tables are values based on calculations using best estimate input parameters and LOCA Evaluation Model codes.

I have also enclosed information contained in CESSAR on the System 80 steam generator. I hope this information will assist you in planning the FLECHT-SEASET tests.

Sincerely,

James H. Holderness

James H. Holderness
ECCS Analysis

JHH:jdg
Encl.

TABLE 6

17 X 17 BLOCKED TESTS

	Nominal EM Conditions	Preferred Range of Condition
1. PARAMETER		
Flooding Rate	3.2→0.7 in/sec variable in steps over 65 seconds	Same as unblocked
Pressure	24-32 psia	"
Peak Power at BOC	0.7 kw/ft	"
ECC Water Subcooling	100°F	"
Rod Initial Temperature at BOC	1200°F	"
% Blockage ($\frac{\Delta \text{ Blocked}}{\Delta \text{ Unblocked}}$)		20-90%
% Bypass *	90%	0-90%
2. SPECIAL TESTS	Same as unblocked	
3. COMMENTS ON INSTRUMENTATION	Steam prove measurement in blocked subchannel and comparable unblocked subchannel location	
4. ANY ADDITIONAL COMMENTS	3-zone blockage capability, e.g. 90% blockage (four subchannels) 50% blockage (50% of bundle) 0% blockage (remainder of bundle)	

* Definition: Percent Bypass - Percent of Subchannels which are unblocked; e.g., 0% = uniform coplanar blockage.

TABLE 7

17 X 17 UNBLOCKED TESTS

	Nominal EM Condition	Nominal BE Condition	Preferred Range of Conditions
1. Parameter			
- Flooding Rate	3.2→0.7 in/sec variable in steps over 65 sec	6→1.1 in/sec continuously variable over 65 sec	0.5-6 in/sec, constant & variable in steps continuously over sec
- Pressure	24-32 psia	30-50 psia	20-60 psia
- Peak Power at BOC	0.7 kw/ft	0.6 kw/ft	0.3-1.0 kw/ft
- ECC Water Subcooling	≤ 100°F	100-0°F variable over 200 sec	0-150°F constant & variable
- Rod Initial Temp. at BOC	1200°F	1000°F	300-1600°F

2. Special Tests
   i) reflood rate variable in steps and continuously over ∿65 second period
   ii) time-varying enthalpy from maximum subcooling to saturation over ∿200 second period

3. Comments on Instrumentation
   redundancy in steam probe measurement at each elevation

4. Any Additional Comments

TABLE 6

STEAM GENERATOR SEPARATE EFFECTS TESTS

	Nominal EM Conditions	Nominal HE Conditions	Preferred Range of Conditions
1. PARAMETER			
- Inlet Primary Steam Flow	4-5 #/ft^2-sec	2-3 #/ft^2-sec	1-5 #/ft^2-sec
- Inlet Primary Quality	1.0	0.3	0.1-1.0
- Primary System Pressure	24-32 psia	30-50 psia	20-60 psia
- S.G. Secondary Pressure	1060 psia	920-1000	20-1200
- S.G. Secondary Level	tubes covered	tubes covered	tubes covered & partially covered
- S.G. Secondary Water Temperature	550	535-545	230-570
2. SPECIAL TESTS			
3. COMMENTS ON INSTRUMENTATION			
4. ANY ADDITIONAL COMMENTS			

NO.	SERVICE	No. REQ'D
1	PRIMARY INLET	1
2	PRIMARY OUTLET	2
3	DOWNCOMER FEEDWATER	1
4	STEAM OUTLET	2
5	BOTTOM BLOWDOWN	1
6	LIQUID LEVEL	8
7	PRIMARY MANWAY	2
8	SECONDARY MANWAY	2
9	HANDHOLE	2
10	UPPER ECONOMIZER FEEDWATER	1
11	LOWER ECONOMIZER FEEDWATER	1

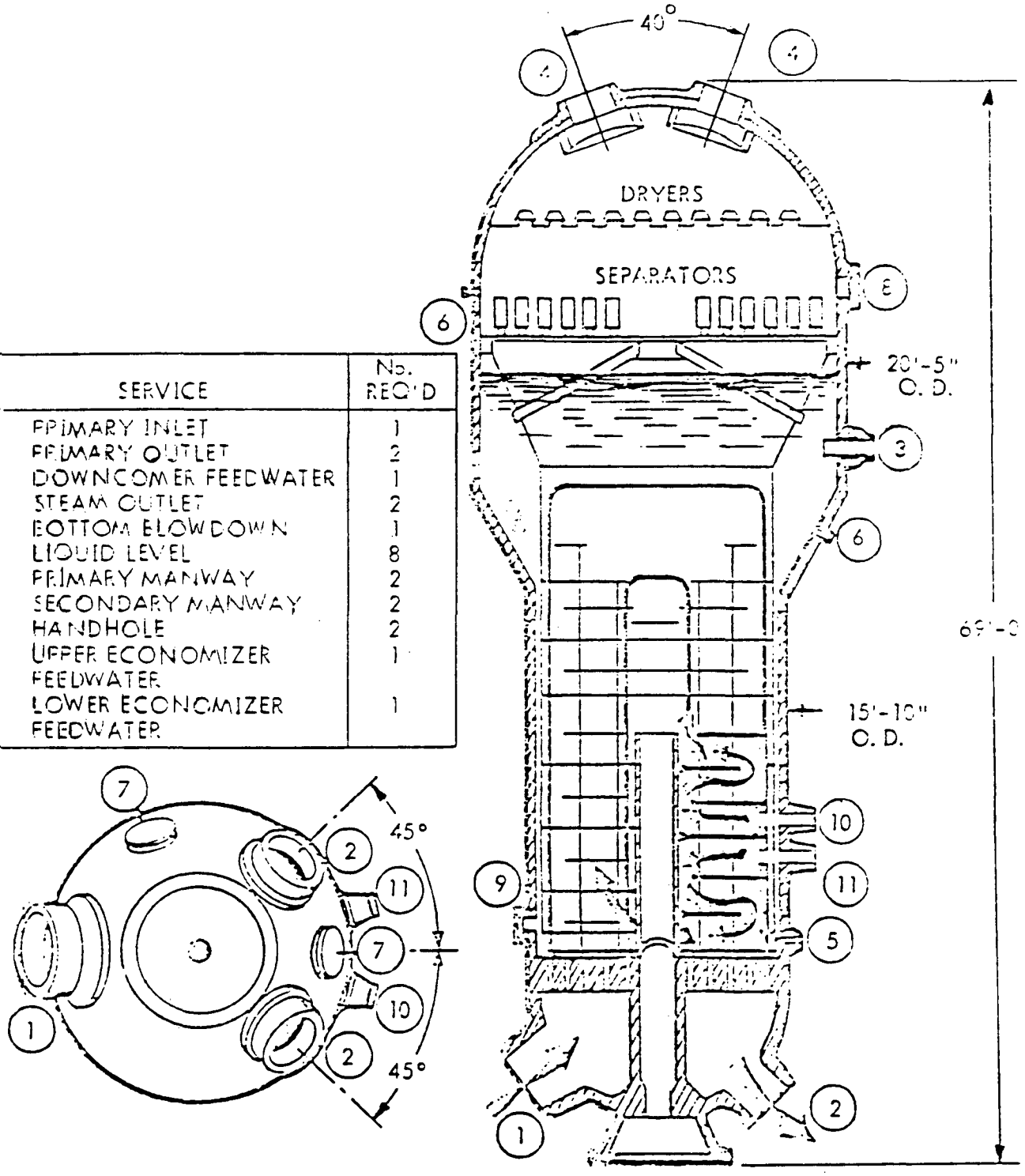

DRY WEIGHT	1,428,900 LBS
FLOODED WEIGHT	2,220,000 LBS
NORMAL OPERATING WT.	1,725,000 LBS (FULL LOAD)
SHIPPING WEIGHT	1,570,000 LBS

Amendment No. 22
May 5, 1975

C - E SYSTEM 80

STEAM GENERATOR

Figure 5.5-

TABLE 5.5-2

STEAM GENERATOR PARAMETERS (1)

Number of Units	2
Heat Transfer Rate, each, Btu/hr	6.512×10^9
Primary Side	
Coolant Inlet Temperature, F	621.2
Coolant Outlet Temperature, F	564.5
Coolant Flow Rate, each, lb/hr	82×10^6
Coolant Volume at 68°F each, ft^3	2158
Tube Size, OD, in.	3/4
Tube Thickness, in., nominal	.042
Secondary Side	
Steam Pressure, psia	1070
Steam Flow Rate (at .25% moisture) each, lb/hr	8.59×10^6
Feedwater Temperature at full power °F	450
Moisture Carryover, weight percent maximum	0.25
Primary Inlet Nozzle, No/ID,in.	1/42
Primary Outlet Nozzle, No/ID, in.	2/30
Steam Nozzle, No/ID, in.	2/28
Feedwater Nozzles, No/Size/Sch.	2/14/80 8
Auxiliary Feedwater Nozzle, No/Size/Sch.	1/6/80
Overall Heat Transfer Coefficient (estimated), Btu/hr-ft^2-°F	1728 8

(1) Performance parameters are based on full power operation. See Table 5.3-2 also.

Babcock & Wilcox

Power Generation Group

P.O. Box 1260, Lynchburg, Va. 24505
Telephone: (804) 384-5111

November 11, 1977

H. W. Massie, Jr.
Westinghouse Electric Corporation
Box 355
Pittsburgh, PA. 15230

Dear Mr. Massie:

I regret our delay in responding to your letter of October 12 requesting proposed test conditions for the unblocked, blocked, and steam generator separate effects FLECHT tests.

We have reviewed the nominal or reference conditions and ranges of conditions given in Tables 1-5 of the attachments to your request. We are in general agreement with the proposed conditions and have no further comments in that regard.

As also requested, we have reviewed Tables 6-8 of the attachments and have provided nominal EM values and suggested ranges of conditions for the listed parameters.

I hope that this information can be of value to you in designing the test program. If you require clarification or have need of further information, please feel free to contact me directly.

Sincerely,

J. J. Cudlin, Manager
LOCA Methods Unit
Technical Staff

JJC/bm
Attachments

TABLE 6

17 X 17 BLOCKED TESTS

	Nominal EM Conditions	Preferred Range of Condition
1. PARAMETER		
Flooding Rate in/s	1.5	8 to 6
Pressure psia	40	25 to 50
Peak Power at BOC Kw/ft	0.8	0.5 to 1.0
ECC Water Subcooling F	100	50 to 150 try one at 0
Rod Initial Temperature at BOC F	1200	600 - 1600
% Blockage $\left(\frac{\Delta \text{ Blocked}}{\Delta \text{ Unblocked}}\right)$	60%	10% - 70%
% Bypass	Not Available	

2. SPECIAL TESTS

3. COMMENTS ON INSTRUMENTATION

4. ANY ADDITIONAL COMMENTS

TABLE 8

STEAM GENERATOR SEPARATE EFFECTS TESTS

	Nominal EM Conditions	Nominal BE Conditions	Preferred Range of Conditions
1. PARAMETER			
- Inlet Primary Steam Flow lbm/sec	150	150	50 - 200
- Inlet Primary Quality %	50	50	30 - 100
- Primary System Pressure psia	40	40	25 - 50
- S.G. Secondary Pressure ft	470	470	250 - 1000
- S.G. Secondary Level ft	20	20	16 - 26
- S.G. Secondary Water Temperature °F	460	460	400 - 540
2. SPECIAL TESTS			
3. COMMENTS ON INSTRUMENTATION			
4. ANY ADDITIONAL COMMENTS			

TABLE 7

17 X 17 UNBLOCKED TESTS

	Nominal EM Condition	Nominal BE Condition	Preferred Range of Conditions
1. Parameter			
- Flooding Rate in/s	1.5	1.5	0.8 to 6.0
- Pressure psia	40	40	25 to 50
- Peak Power at BOC Kw/ft	0.8	0.8	0.5 to 1.0
- ECC Water Subcooling F	100	100	50 to 150
- Rod Initial Temp. at BOC F	1200	1200	600 to 1600
2. Special Tests			
3. Comments on Instrumentation			
4. Any Additional Comments			

EXXON NUCLEAR COMPANY, Inc.

2101 Horn Rapids Road
P. O. Box 130, Richland, Washington 99352
Phone: (509) 943-8100 Telex: 32-6353

WVK-77-6

November 15, 1977

Mr. E. H. Davidson
Division of Reactor Safety Research
Nuclear Regulatory Commission
Washington, D.C. 20555

Dear Mr. Davidson:

Exxon Nuclear has the following comments regarding the proposed FLECHT-SEASET tests (Westinghouse letter SPM-77-665 of October 12, 1977):

1. The reference test conditions for blocked and unblocked tests presented in Tables 1 and 3 are acceptable.

2. The range of test conditions for the blocked and unblocked tests are acceptable except for two parameters, the peak power and the coolant subcooling. The maximum peak power appears to be too high. We suggest a maximum of 0.8 Kw/ft. Also the coolant subcooling should range between 50 and 180°F.

3. The range of conditions for the steam generator separate effect tests are acceptable except for the secondary side pressure and temperature which should have lower limits of perhaps 200 psia and 382°F.

4. A useful separate effects test would be to model the upper plenum region of the fuel rod and to measure the response of wall temperature and fill gas temperature with time. The upper fuel rod plenum condition is a very sensitive parameter in determining rupture conditions of the fuel rod during a LOCA.

5. Measurements of droplet density and size near the upper tie plate (11 to 12 ft elevation) would be helpful in predictions of fallback into the core as well as heat transfer to the upper fuel rod plenum.

6. For the flow blockage tests, ENC would like to see the experiments made with 20-70% of the flow channel blocked.

Sincerely,

William V. Kayser

Dr. William V. Kayser
Nuclear Safety Engineering

WVK:mh
cc: Mr. H. W. Massie, Jr.

EG&G Idaho, Inc.

P. O. Box [illegible]
Idaho Falls, Idaho 8340[illegible]

October 14, 1977

Mr. R. E. Tiller, Director
Reactor Operations and Programs Division
Idaho Operations Office - DOE
Idaho Falls, Idaho 83401

"BEST ESTIMATE" DESIGN DATA FOR FLECHT-SEASET TEST FACILITIES - Stig-293-77

Ref: G. W. Johnsen, et. al., A Comparison of "Best-Estimate" and "Evaluation Model" LOCA Calculations: The BE/EM Study, EG&G Idaho Inc., PG-R-76-009, December 1976

Dear Mr. Tiller:

At the August 30, 31, 1977 FLECHT-SEASET Program Management Group meeting, EG&G Idaho, Inc. was asked to provide "Best Estimate" type data to aid in the design of the several test facilities of that program. Specifically, the following information was requested for a four-loop PWR:

1. Total core power at the beginning of reflood.

2. Core inlet, equivalent forced-feed, flooding rate (inches per second) as a function of time throughout the reflood period.

3. Upper plenum pressure as a function of time during reflood.

4. Representative fuel rod axial temperature profile at reflood initiation.

5. The subcooled temperature of the liquid at the core inlet as a function of time during reflood.

The following information is our response to the subject request. It is our understanding that Westinghouse (Test Contractor) is asking for max-min type data with which to size the test facilities rather than specific tests to be performed. Depending upon the specific parameter under discussion, "Best Estimate" type predictions would dictate the limit of one end of the test range (Maximum or minimum) and licensing criteria the other extreme (minimum or maximum). Westinghouse will establish the licensing limits based on data from the several PWR vendors (i.e. W, CE, B&W, etc).

As your are aware, there are currently no universally accepted criteria as to what constitutes a "Best Estimate" analysis of a PWR. Further, because current codes are in a developmental stage, it is sometimes necessary to perform analyses in ways that cannot be proven to be prototypical at this time. Thus we must state that while the following information is based on our evaluation of calculations from current BE codes and constitutes our best judgement as to the desired

data, those data are not without some uncertainty. It is our recommendation that Westinghouse provide healthy contingencies over and above the "Best Estimate" data reported herein. Where possible, we have indicated what constitutes, in our judgement, reasonable contingencies.

I. Total Core Power at the Beginning of Reflood

The blowdown, "Best Estimate" analysis of the reference shows that reflood starts at approximately 39 seconds after rupture. The assumptions used in that analysis are identified in the reference. Briefly these were:

1. Rated power (3238 MW) at rupture (Zion I).

2. ANS standard decay heat profile.

3. The fuel condition was defined in terms of "most probable state", which translates to a middle-of-cycle, equilibrium condition (Initial peak power = 10.91 KW/ft).

4. SCRAM occurs.

5. Nominal containment pressure.

Based on the above, the total core power at reflood initiation would be:

3238 MW $\quad PF_{ANS} = (3238 \times 0.04) = 129.5$ MW

In our judgement, future improvement of the analytical process and tools could affect the calculated time of reflood by up to ± 5 seconds. Based on these criteria, the test facility should be capable of simulating a total core power(BE) at reflood initiation of:

$$(3238 \text{ MW})\ (0.039) \leq \text{Total Core Power} \leq (3238 \text{ MW})\ (0.041)$$
$$126.3 \text{ MW} \leq \text{Total Core Power} \leq 132.7 \text{ MW}$$

II. Core Inlet, Equivalent Forced-Feed Flooding Rate

Several "Best Estimate" studies of a prototypical plant have been reviewed in order to develop the desired data. The majority of these studies came from the reflood follow-on effort of the reference. This effort has not been formally documented to date. All of the studies reviewed used gravity reflood models thus the core inlet flow was oscillatory in nature. Concerning the period and amplitude of these oscillations we recognize that there is a measure of uncertainty about the protypicality of the calculated values. However, it is our judgement that equivalent forced-feed flooding rates reduced from the calculated data base can be used as guides in the subject test facility design.

As a result of our review, we conclude that a stepped flooding rate of 6 inches per second for the first 5 seconds and 4 inches per second thereafter, most nearly represents the composite calculated results, However, because of the stated uncertainty in the analytical tools, we feel that the test facilities should have the capability for both stepped and constant flooding rates up to 8 inches per seconds. We do not wish to discourage Westinghouse from designing for flooding rates higher than 8 inches per second, but feel such a decision rests on the degree of increased cost associated with this additional capability.

III. Upper Plenum Pressure

The following information was developed from the same calculated data base as was the flooding rate discussed in Section II and is, therefore, subject to the same uncertainty identified in that section. In the subject studies the upper plenum pressure was also oscillatory; however, because the local (short duration) oscillations are a result of gravity-feed phenomena, not simulated in the FLECHT-SEASET separate effects tests, a smoothed profile is a more appropriate design base for those test facilities. The profile developed from the source studies is shown in Figure 1. Please be aware that we are not saying that Figure 1 is "The Reflood Profile", but rather we conclude that:

1. The test facilities should have the capability of programming a desired upper plenum pressure profile.

2. The current "best estimate" pressure level at reflood initiation is 40 psia for a Zion type four loop plant.

3. The test facility should have the capability to vary the upper plenum pressure over a 15 psi (minimum) range during reflood.

FIGURE 1

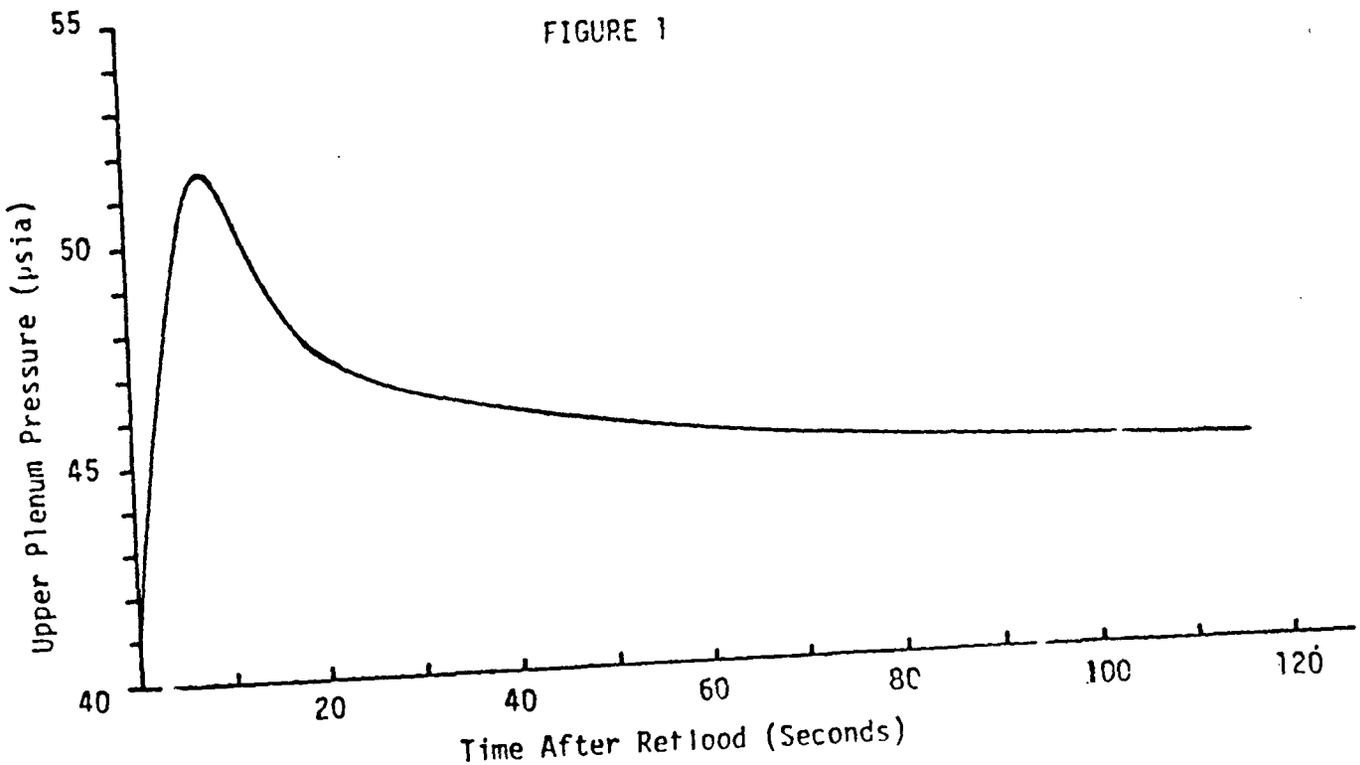
55
50
45
40
Upper Plenum Pressure (μsia)
20
40
60
80
100
120
Time After Reflood (Seconds)

IV. Fuel Rod Axial Temperature Profile at Reflood Initiation

The average core temperature profile developed from the "Best Estimate" blowdown/refill study of the reference is shown in Table I.

TABLE I

Elevation (ft)	Fuel Rod Surface Temperature (°F)	Elevation (ft)	Fuel Rod Surface Temperature (°F)
0	550	7	971
1	685	7.8	980(Peak)
2	840	8	978
3	893	9	961
4	917	10	910
5	937	11	780
6	956	12	530

The data in the table indicate that at reflood initiation, the temperature is slightly skewed toward the top. This condition appears to be result of hydraulic phenomena rather than the rod power profile (approximately symmetrical about the 6 foot elevation) and may or may not be prototypical. Again we do not wish to imply that Table I defines "The Profile". Rather we conclude that the test facility design should provide for:

1. Peak heater rod temperatures as low as 900°F.

2. Heater rod temperatures at the top and bottom of the rod as low as 500 °F.

It is our understanding that the shape of the axial temperature profile in the test facility heater rods is a direct function of the heater element wrap design. Thus to vary the temperature profile, significantly, a different heater rod design is required for each desired profile. In terms of heater equipment cost, it may be prohibitively expensive to provide the capability for more than one initial temperature profile. If this is indeed the case, we recommend that the cosine profile used in the FLECHT-SET test program be continued in this program. However, we would also suggest that serious consideration be given to using the skewed profile of FLECHT-SET in addition to the cosine profile.

V. Core Inlet, Liquid Subcooling Profile During Reflood

It is our understanding that Westinghouse is asking for information regarding the bulk liquid temperature response in the lower plenum during reflood. Of all the data requested, this information has proven to be

the most difficult to predict. The subject response depends on such items as the point of ECC injection (upper plenum, cold leg, etc.), the ECC subcooling at point of injection, system pressure response, assumed steam/water mixing at point of injection, etc. If one assumes minimum steam/water mixing at the point of injection, and minimum short-term heat transfer in the injection path (downcomer, etc.), then our calculations indicate that the lower plenum bulk liquid subcooling can increase from zero at reflood start to that at the point of ECC injection within 50 to 70 seconds after reflood initiation. If on the other hand one assumes that considerable steam is generated and available at the point of injection, that this steam is well mixed with the injected ECC upstream of the lower plenum, and that considerable residual heat is extracted from the injection path (wall heat),then it is possible to foresee zero subcooling in the lower plenum throughout most of the reflood. Until such time as our analytical tools and the experimental data on which they are based are improved, we can only recommend that the capability for considerable subcooling be provided in the test facility design. We feel that 140 °F of subcooling is historically significant and is, therefore, appropriate in the absence of other criteria. We further recommend that the test facility be capable of providing a smoothed subcooled profile ranging from zero at reflood initiation to full subcooling some 50 to 70 seconds after reflood initiation. It is our judgement that such a capability should allow for the proper subcooling profile at such time in the future as that profile can be determined with an acceptable degree of certainty.

Very truly yours,

R. R. Stiger, Manager
Reactor Behavior Division

GEW:sw

cc: E. H. Davidson, NRC-RES (Proj. Manager) - 3
R. W. Kiehn EG&G Idaho, Inc.

APPENDIX D

UPPER PLENUM DESIGN ASPECTS

D-1. IMPORTANT PHENOMENA

Fluid flows in an upper plenum are considered in this appendix, to point out important phenomena to be simulated.

Designing an upper plenum model requires knowledge of the behavior of vapor and water droplets in the upper plenum. Knowledge of the flow of entrained water is especially important, to study the possible phase separation in an upper plenum. Droplet trajectories in a real upper plenum (Trojan) were calculated at INEL,[1] as shown in figure D-1. This figure shows that there are roughly two flow regimes: axial fluid flow and cross flow.

It will be helpful to consider every possible route which a water molecule in an entrained droplet may take in the upper plenum. Possible paths of water in the plenum are summarized in figure D-2. No condensation of vapor in the upper plenum is assumed. Liquid water is removed from the upper plenum by evaporation, flowing through the hot leg, or fallback, if possible. These water sinks are shown as shaded boxes in figure D-2. Evaporation in the upper plenum was analyzed at INEL,[1] and it was found that the evaporation was negligible after a few seconds in reflooding (figure D-3). Staying on the walls or the upper core plate is of no importance in studying the various transitions of water. The remaining paths in figure D-2 are considered to be important in analyzing the phase separation in the upper plenum. Therefore they are discussed in the following paragraphs.

Each box of importance in figure D-2 is numbered for the convenience of discussion. Most water molecules in entrained droplets introduced in to the upper plenum will impinge

---

1. Benedetti, R. L., et al., "Potential Influence on Three-Dimensional Effects on PWR LOCA Behavior," TREE-NUREG-1031, February 1977.

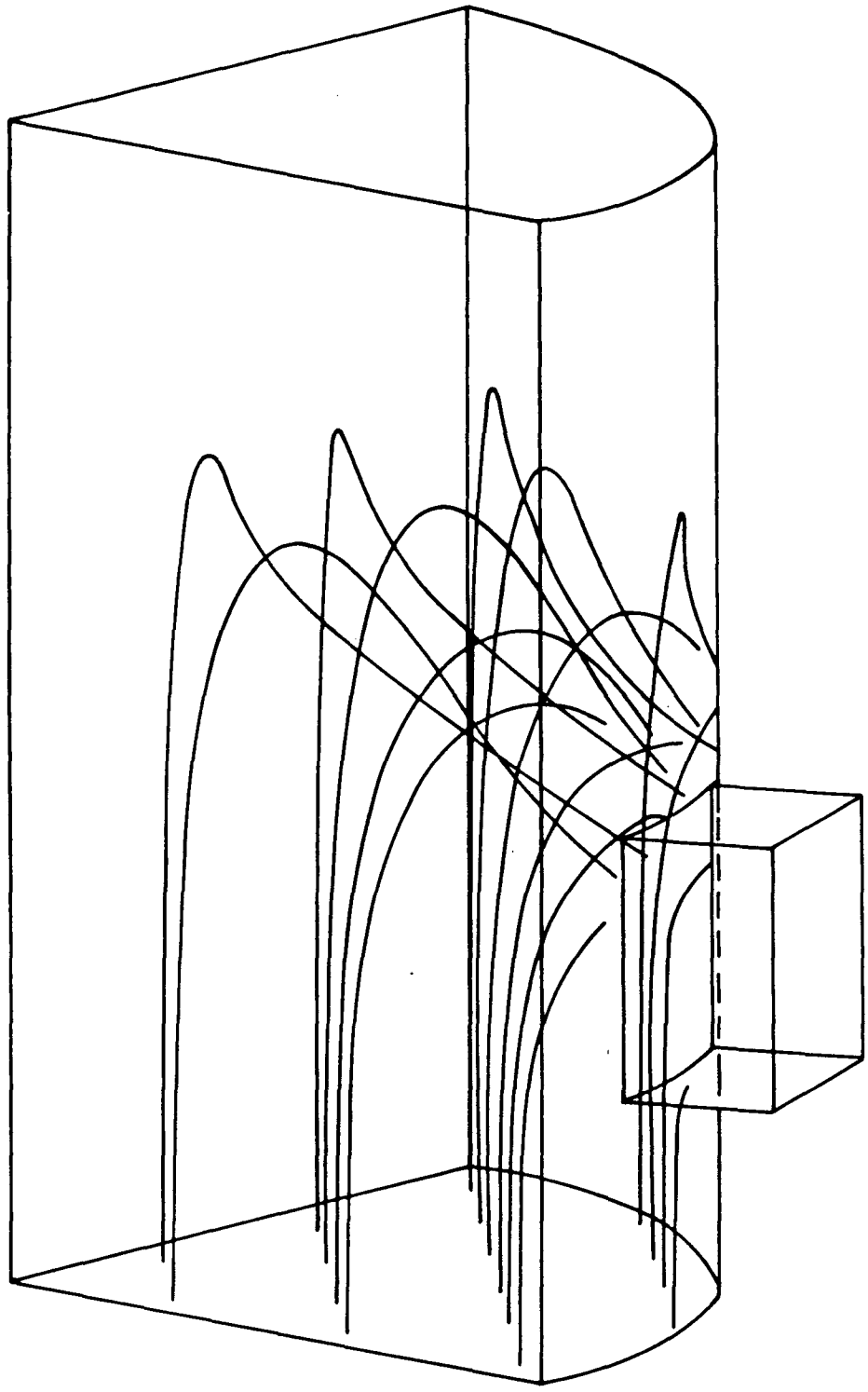

Figure D-1. Calculated Particle Trajectories in a Quadrant of Trojan Upper Plenum

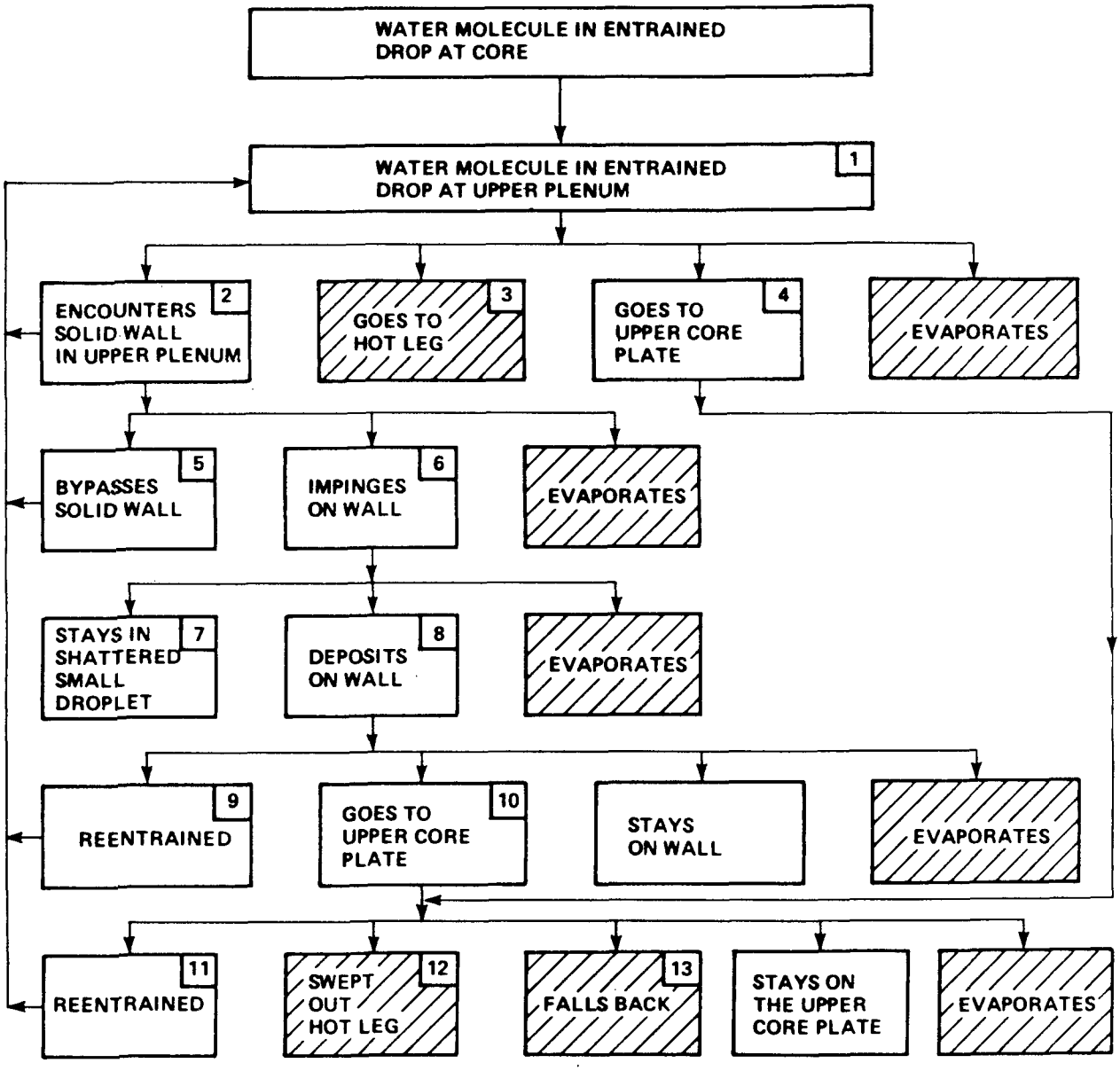

Figure D-2. Life of Water Molecule in Entrained Water Droplet at Upper Plenum

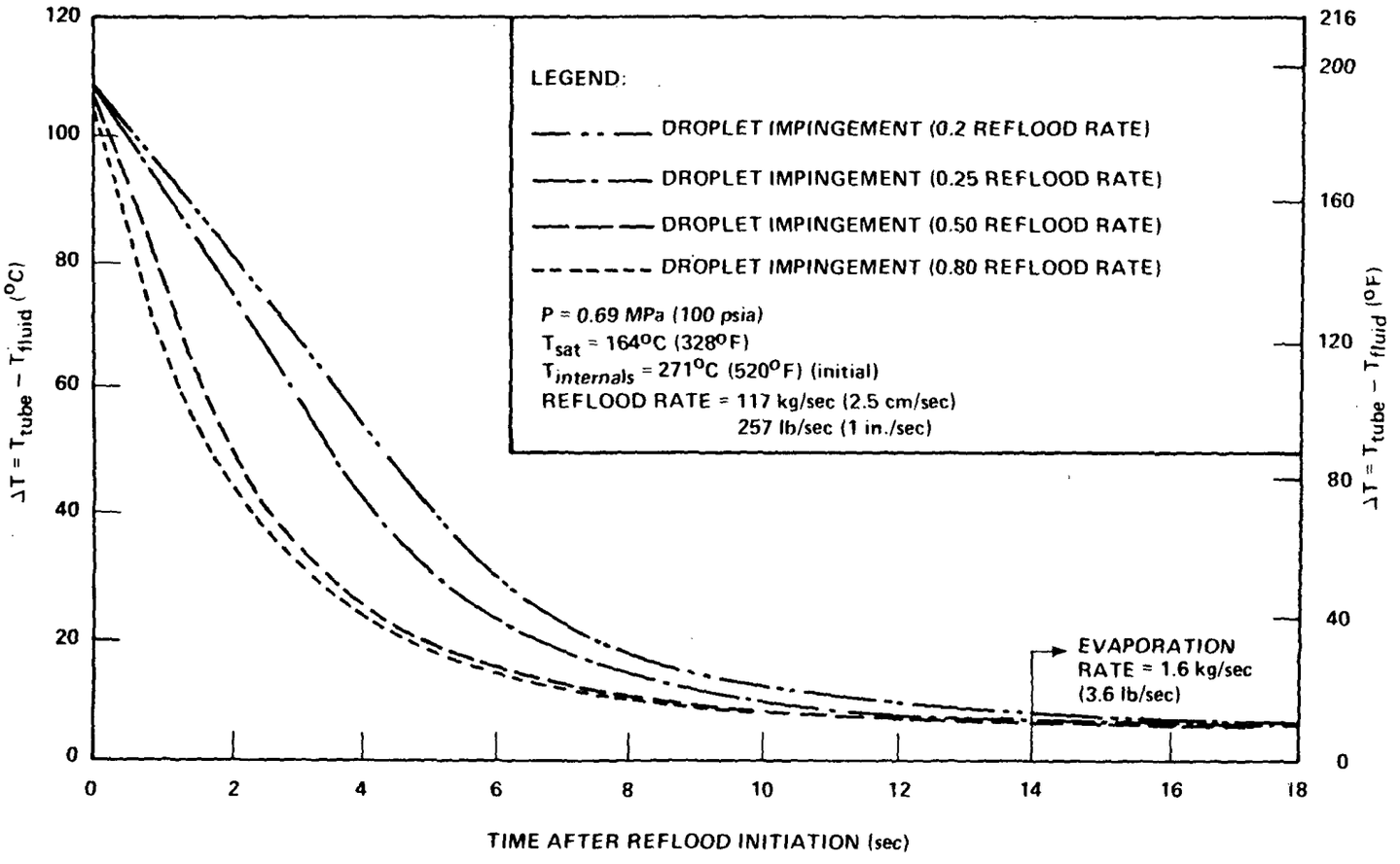

Figure D-3. Trojan Upper Plenum Internals Temperature Response

on the solid walls of the upper plenum internals, wall, and ceiling [paths 1-2-6 or $(1\text{-}2\text{-}5)_{n-6}$]. Some of the water will go to the hot leg or upper core plate directly. Those impinged water particles may take either of two routes: return to the space as a part of a shattered smaller droplet (7) or deposit on the wall (8). The particles returned to the space are in the state of box 1 and may take any subsequent paths (7-1-2, 3, or 4). Water deposited on a solid surface may be reentrained into the space by either steam flow or gravity (9). Remaining water will eventually flow down the wall to end up on the upper core plate (10). Water on the upper core plate may be reentrained by coning or bubble burst (11). If a froth layer is formed on the upper core plate, then water on the plate may flow directly into the hot leg by either the growth or oscillation of the froth layer (12). The water may also flow back in to the core, depending on the vapor flow condition at the upper core plate (13).

Several physical phenomena must be understood to analyze the transitions discussed above. Paths 1-2-6-7 or 8 are mainly concerned with droplet impingement on the walls. Routes 8-9 and 8-10 during a cross steam flow are related to the fluid flow around the cylinder and possibly to the flow separation effect. Path 10-11 is related to the entrainment phenomenon at the top of a froth layer or coning. Route 10-12 is related to the froth layer formation and flow oscillation. Routes 8-9 and 8-10 during an axial flow are related to the two-phase flooding phenomenon. Route 10-13 is also related to flooding.

The above considerations show that the most important phenomena in the upper plenum are flooding, phase separation by rods (with various approaching angles of flow), and froth formation at the upper core plate. All three phenomena will affect the droplet size distribution in the upper plenum. Flooding is an important phenomenon in both phase separation in the upper plenum and water fallback to the core. Phase separation by rods is coupled with flooding and includes complicated procedures of deentrainment and reentrainment. Repeated deentraining and reentraining give a cascade phenomenon. The froth buildup may affect fallback, water flow in the hot leg, and the rate of reentrainment and deentrainment, but the froth is governed by the fluid flow through the upper core plate and water deentrainment in the upper plenum. Flow through the upper core plate is a control factor governed by the core flow, and water deentrainment is mostly controlled by flooding and phase separation at walls. Therefore,

it is considered that flooding, phase separation at rods, and froth buildup environment are the phenomena which must be simulated in the upper plenum.

Flooding is related to the axial flow; the phase separation at rods is related mainly to the cross flow. The cross flow in the upper plenum can approach the walls with varying angles, as shown in figure D-1. A preliminary result by Barnard, et al.,[1] showed no significant approaching angle effect. Therefore, only the cross flow which impinges on rods with a right angle will be considered.

D-2. Flooding

Wallis[2] showed that the correlation for flooding in vertical tubes may be expressed as

$$j_g^{*1/2} + m j_f^{*1/2} = C \qquad \text{(D-1)}$$

where

$$j_g^* = j_g \rho_g^{1/2} \left[gD\ (\rho_f - \rho_g) \right]^{-1/2}$$

$$j_f^* = j_f \rho_f^{1/2} \left[gD\ (\rho_f - \rho_g) \right]^{-1/2}$$

j = mass flux (gas flux: upward; liquid flux: downward)

D = tube diameter

m and C = constants which depend on a nondimensional parameter N_f

$$N_f = \frac{\left[gD^3\ \rho_f (\rho_f - \rho_g) \right]^{1/2}}{\mu_f}$$

---

1. Barnard, D. H., et al., "A Preliminary Investigation of Two-Phase Flow Behavior Related to the Upper Plenum of a PWR," paper presented at the Sixth Water Reactor Safety Research Information Meeting, Gaithersburg, MD, November 6-9, 1978.

2. Wallis, G. B., One-Dimensional Two-Phase Flow, McGrew-Hill, New York, 1969.

A dryout condition (no liquid downflow) is presented by Wallis as

$$j_g^* = C \tag{D-2}$$

where C ranges from 0.7 to 0.9. These correlations were developed from experiments using tubes with small diameters (3/4 to 1-1/4 in.). These correlations show that flooding depends on the pipe diameter.

Pushkina and Sorokin[1] ran a series of experiments to study the dryout phenomenon. They used two water feeding methods: a porous wall at the midsection of a long tube and a water tank at the top of a tube. The results showed that a dryout could be predicted by the Kutateladze criterion:

$$K = \frac{j_g \sqrt{\rho_g}}{\sqrt[4]{g\sigma(\rho_f - \rho_g)}} = 3.2 \tag{D-3}$$

for tubes with a diameter between 13 and 309 mm. They also performed the test by changing the water level from 50 to 500 mm in the top tank of the second feeding method. The results showed no practical difference in the magnitude of the critical air velocity. Recently Dukler, et al.,[2] presented a physical basis for the Kutateladze criterion considering a force balance of the largest stable droplet. The minimum gas velocity required to suspend a drop is determined by the following force balance:

$$1/2\, C_d \left(\frac{\pi d^2}{4}\right) \rho_g V_g^2 = \left(\frac{\pi d^3}{6}\right) g(\rho_f - \rho_g) \tag{D-4}$$

1. Pushkina, O. L., and Sorokin, Y. L., "Breakdown of Liquid Film Motion in Vertical Tubes," Heat Transfer - Soviet Research 1, No. 5, pp 56-64, (1969).

2. Dukler, A. E., et al., "Two-Phase Interactions in Countercurrent Flow Studies of the Flooding Mechanism," Summary Report No. 2 for the USNRC, University of Houston, December 1977.

where d is the droplet diameter and C_d is the drag coefficient around the drop. The drop size is determined by the balance of forces that try to shatter the drop and surface tension forces that hold the drop together. Hinze[1] showed that the average drop size is

$$d = \frac{We_c \sigma}{\rho_g V_g^2} \tag{D-5}$$

where We_c is the critical Weber number. From equations (D-4) and (D-5), the gas velocity to support the stable drop is given as

$$V_n^T = j_-^T = \left(\frac{4We_c}{3C_d}\right)^{1/4} \left\{ \frac{[\sigma g (\rho_f - \rho_g)]^{1/4}}{\rho_g^{1/2}} \right\} \tag{D-6}$$

Equation (D-6) is essentially the same as equation (D-3) with the constant $(4We_c/3C_d)^{1/4} = K$. This Kutateladze criterion does not depend on the pipe diameter. This independence of geometry was well reasoned by Pushkina and Sorokin as follows: Observations indicate that the critical velocity of the reversal of the film's motion is determined by the conditions of the interaction between the gas flow and the discrete protuberances of the liquid which occur on the tube wall during the development of the flooding phenomenon. These protuberances have the form of crests whose dimensions do not depend on the tube diameter. This observation is consistent with the Dukler model if one visualizes the crest of the waves on the film as being supported (if not shattered into the gas core) by the gas stream in a manner similar to the support of the liquid droplets. In fact Richter[2] applied force balance on waves and obtained the following relation:

---

1. Hinze, J. O., "Fundamentals of the Hydrodynamic Mechanism of Splitting in Dispersion Processes," Am. Inst. Ch. Eng. J. 1, pp 289-295, (1955).

2. Richter, H. J., "Air/Water Annuli Flooding Experiments," paper presented at the Sixth Water Reactor Safety Research Information Meeting, Gaithersburg, MD, November 6-9, 1978.

$$K = 3.5 \tag{D-7}$$

He also showed independence of flooding conditions on channel geometries. Jacoby and Mohr[1] ran a series of air-water tests using Westinghouse upper plenum internals and upper core structure, and found the flooding was well correlated by two Kutateladze numbers, K_g and K_f, which are defined as

$$K_g = j_g \rho_g^{1/2} \left[g\sigma(\rho_f - \rho_g) \right]^{-1/4} \tag{D-8}$$

$$K_f = j_f \rho_f^{1/2} \left[g\sigma(\rho_f - \rho_g) \right]^{-1/4} \tag{D-9}$$

This is another support for the independence of flooding on channel geometry.

Though the Wallis correlation includes the tube diameter term, it appears in the term of the power of 1/4. Therefore the net effect will be small. Moreover, Wallis considered a narrow range of diameters. Therefore, it is believed that the diameter term played a minor role in the development of the Wallis correlation; the same data may be well correlated by Kutateladze numbers.

Therefore, it is concluded that when flow area is large enough, flooding conditions are not dependent on the channel geometry but depend on the fluid properties and superficial velocities. From this conclusion, it is suggested that the upper plenum should be designed to give superficial velocities of steam and the same fluid properties.

D-3. Phase Separation During Cross Flow

Moore, et al.,[2] derived a relation for the phase separation efficiency of a cross flow in a tube or wire bank as follows:

---

1. Jacoby, J. K., and Mohr, C. M., "Final Report on 3-D Experiment Project, Air-Water Upper Plenum Experiments," TID-29030, November 1978.

2. Moore, M. J., et al., Two-Phase Steam Flow in Turbines and Separators, Hemisphere Publishing, Washington, DC (1976).

$$\eta = 1-(1 - \eta_T)^{am} \tag{D-10}$$

where

$$\eta_T = \frac{D}{G} (1 + Stk^{-2})^{-1/2} \tag{D-11}$$

m = number of tube row

a = constant ranging between 0.5 and 1.0

$$Stk = \left(\frac{\pi}{9}\right)\left(\frac{\rho_f d^2 u}{\mu_g P}\right)$$

d = drop diameter

u = fluid velocity

D, G, and P are defined in figure D-4. Equation (D-10) compares fairly well with the experimental results of Burkholz.[1] The above correlations show important control parameters in deentrainment in a rod array, but they are based on the following assumptions:

-- Relative motion between a drop and gas is governed by Stokes law.

-- Drop diameter is large compared to the mean free path and small compared to the tube diameter.

Figure D-5 shows a quadrant of an upper plenum with locations of internals. An upper plenum of a four-loop PWR has guide tubes and upper support columns as its internals. The guide tube is approximately square with 18.6 cm (7.34 in) long sides. The support column is a cylinder with a diameter of 8.9 cm (3.5 in.). Equation (D-10) is not applicable to the mixed rod diameters and irregular rod array. But the real situation can be idealized in several ways to get a reasonable and conservative separation efficiency. One way to idealize the situation is to ignore the support columns and some guide tubes in order to get a regularly arrayed single-size rod bank (figure D-6).

---

1. Cited in Moore, J. J., and Sieverding, C. H., Two-Phase Steam Flow in Turbines and Separations: Theory, Instrumentation, Engineering, McGraw-Hill, New York, 1976.

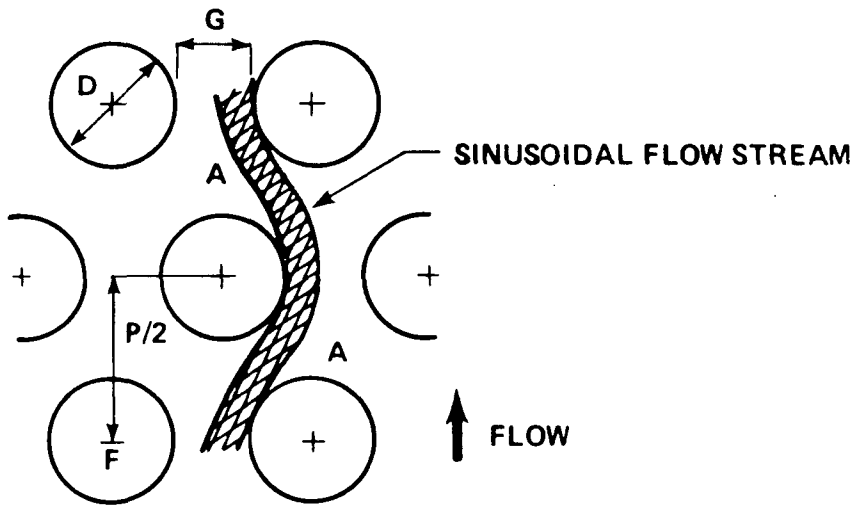

Figure D-4. Sinusoidal Flow Stream Assumed in Wire or Tube Bank

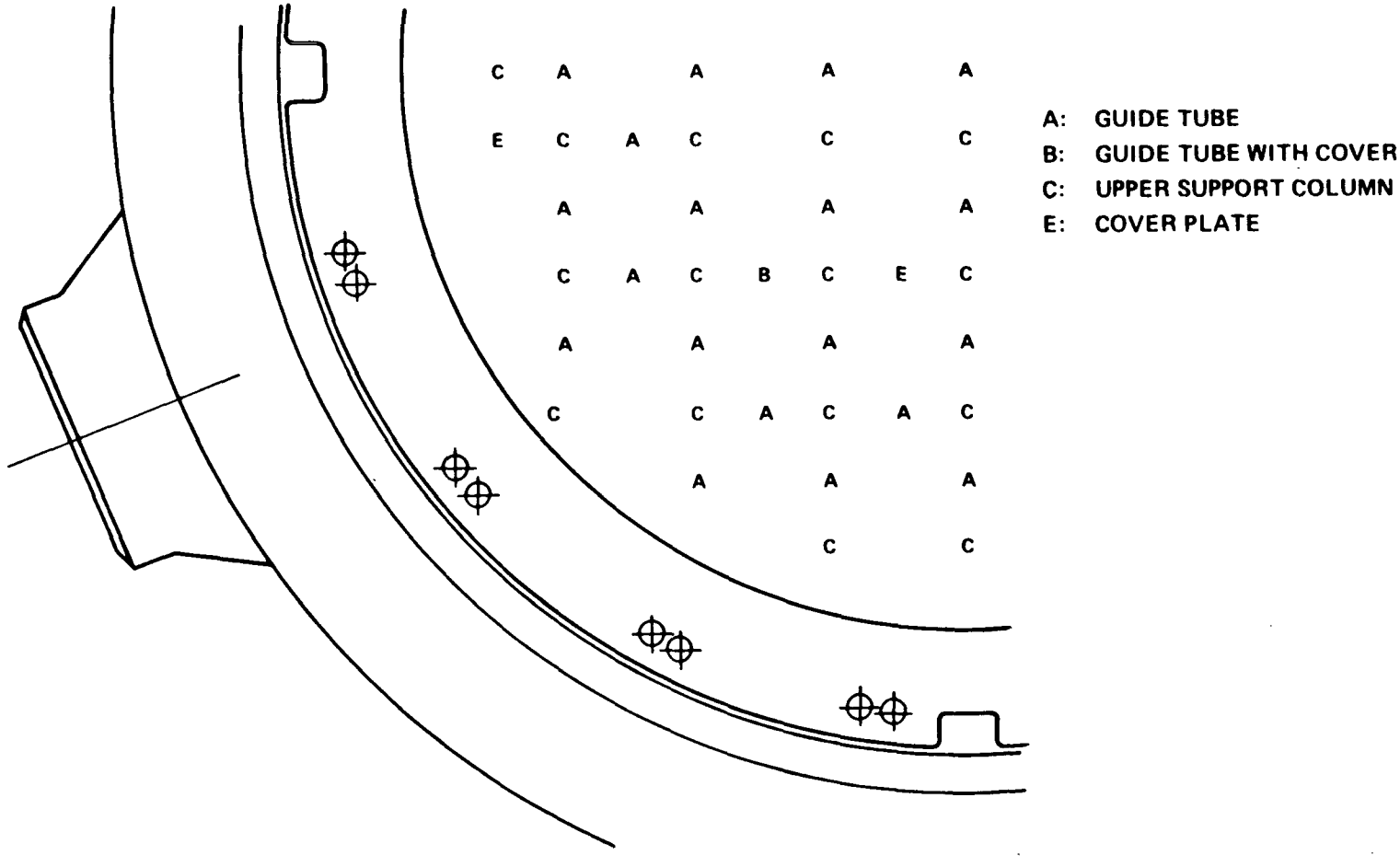

Figure D-5. Quadrant of an Upper Plenum of Four-Loop PWR With Internals Locations

20616-29

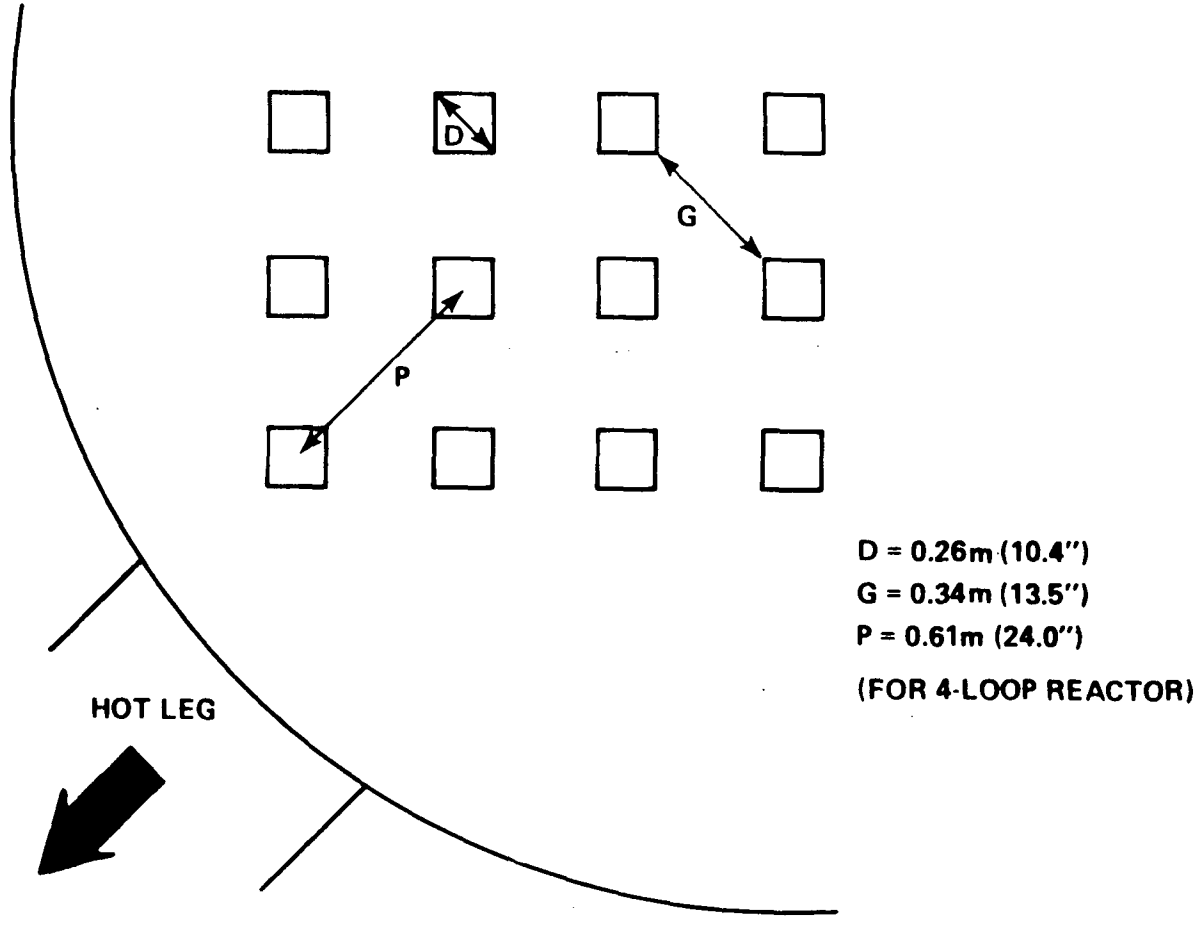

Figure D-6. Idealized Internal Array

Removing several rods reduces separation efficiency, according to equation (D-10). Therefore, this model is conservative. A sample calculation of the separation efficiency using the following values can show the relative importance of the several parameters:

μ	=	0.0338 lb/ft-hr	u	=	30 ft/sec = 108,000 ft/hr
ρ_f	=	57.53 lb/ft^3	d	=	500 μ = 1.64 x 10^{-3} ft
D	=	10.4 in.	G	=	13.5 in.
P	=	2 ft			

The above fluid properties are those of saturated steam and water at 0.41 MPa (60 psia). Fluid velocity is based on the INEL calculations when the steam velocity at upper core plate is uniformly 15 m/sec (50 ft/sec). From equation (D-11),

$$\eta_T = \frac{D}{G}\left[1 + \left(\frac{9\mu_g P}{\pi \rho_f d^2 u}\right)^2\right]^{-1/2}$$

$$\approx 0.77 \text{ for each row}$$

This shows that the second term in the bracket is almost insignificant and changes as a function of d, as follows:

d	Second Term in Bracket
500 μ	0.00013
100 μ	0.08

Thus, for this operational condition, the most important parameters in the phase separation are the rod diameter and its gap. Of course, the number of rows is also important. It must be reemphasized that an upper plenum designed according to the idealized situation will result in a conservative phase separation.

D-4. UPPER PLENUM DESIGN

Upper plenum design aspects are considered in view of the phenomena discussed in paragraphs D-1 through D-3.

D-4. Geometries of Upper Plenum Shell

The upper plenum is suggested to be a cylindrical shape whose diameter should be decided based on the flooding conditions and internal geometries.

The distance from the upper core plate to the hot leg is very important in sweeping out the froth on the upper core plate to the hot leg. Therefore, it is proposed to maintain this distance as a real one (ℓ_1) in figure D-7.

Hot leg openings for the broken and unbroken loops can be taken to be circular ones whose areas are scaled to flowrate. Since the openings designed in this way are small holes on a long wall of a small-diameter cylinder, flow stream lines are expected to change direction abruptly near the hot leg nozzles. This excessive flow direction change may enhance phase separation because of the inertia of droplets. But this atypical phase separation is considered to be negligible, as discussed below.

An INEL air-water upper plenum experiment[1] showed that most of the liquid phase is dispersed in the churn-turbulent froth whose top level oscillates, and the liquid phase dispersed as droplets is negligible after the formation of the froth layer. If this limited observation is accepted and emphasis is placed on the period sometime after the initiation of reflood, then the two-phase flow above froth formation can be considered single-phase flow.

Flow pattern calculations show that there is a long dead flow zone above the hot legs for this design of nozzle openings. This no-flow zone may improve phase separation because of vapor condensation and drop deposition on the walls of the housing and internals. Therefore, it is desirable to remove this essentially stagnant zone. Calculations also show that the space above 1.20 m (39.4 in.) from the core plate is almost a no-flow zone. To allow room for the oscillation of the froth layer, the ceiling can be taken at 1.33 m (52.5 in.) above the core plate. The design of this option is shown in figure D-8.

---

1. Jacoby, J. K., and Mohr, C. M., "Final Report on 3-D Experiment Project Air-Water Upper Plenum Experiments," TID-29030, November 1978.

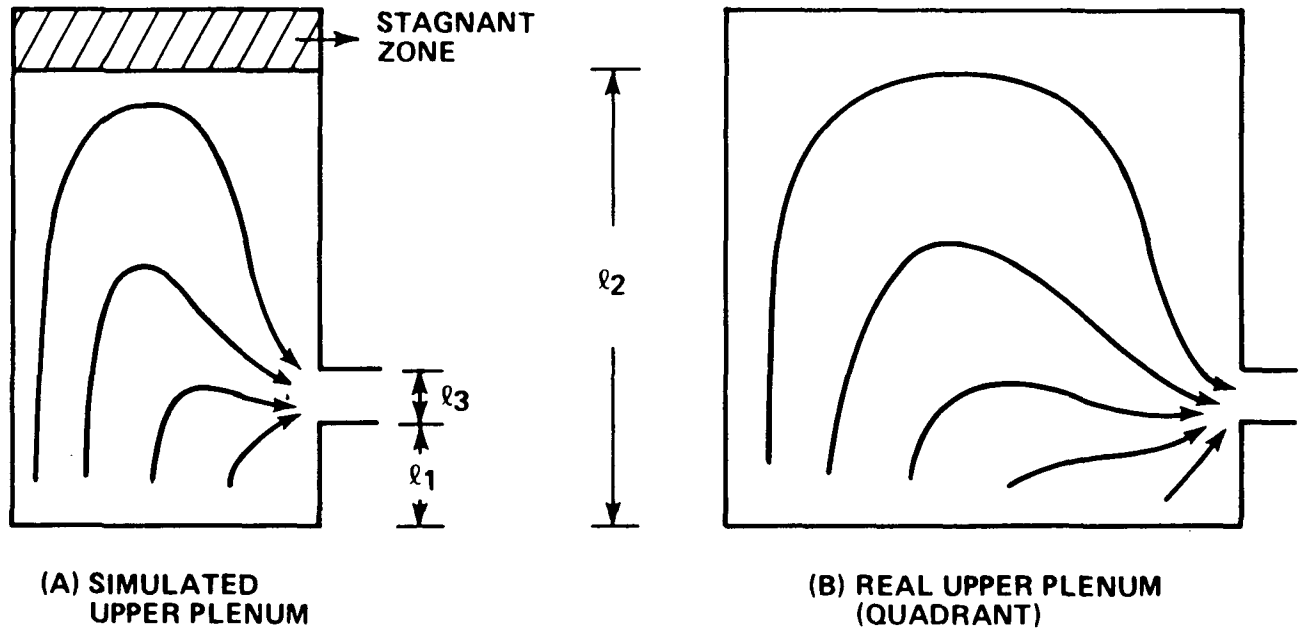

Figure D-7. Upper Plenum With Stream Lines

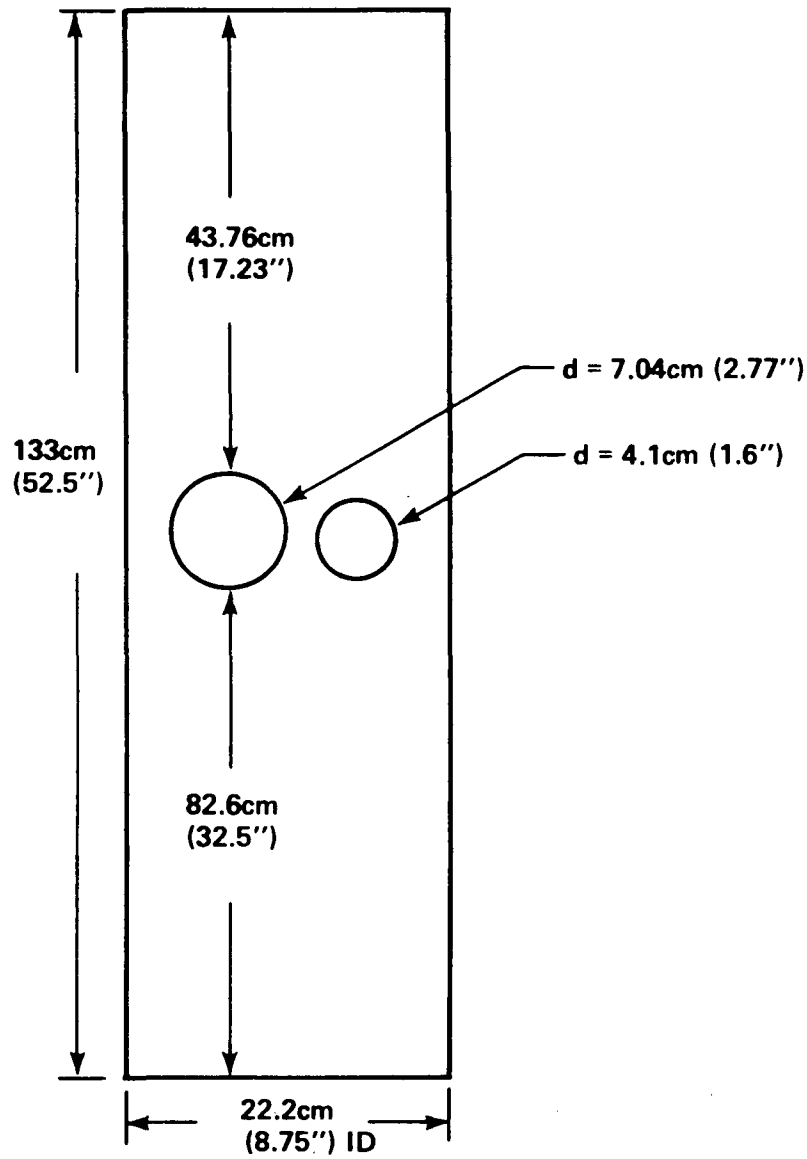

Figure D-8. Upper Plenum With Nozzles

Fluid from the upper plenum must be split into two loops (broken and unbroken). It is proposed to make nozzle openings on one side of the plenum cylinder to provide the maximum possible cross flow distance. In this way, a thermal siphon effect can be simulated by arranging rod power as shown in figure D-9a. This arrangement compares well with the real situation as (figures D-9a and D-9b).

D-5. Model Internals

D-6. General Arrangement - The idealized internal array in the upper plenum is shown in figure D-6.

Internals are installed in the upper plenum to obtain phase separations comparable to the prototype upper plenum. As discussed in paragraphs D-1 through D-3, this separation is governed mainly by rod diameter, gap size, and the number of rod rows. From this consideration and the recommendations discussed, it is proposed to simulate the rod array of figure D-6 by the rod arrangement shown in figure D-10. These model rods have a smaller diameter than the real internals. Each rod is proposed to be located at the top of the hole of the upper core plate. Detailed design and dimensions are discussed in subsequent paragraphs.

The deentrainment efficiency of the rod array of figure D-6 is calculated as

$$\eta_T \approx \frac{10.4}{13.5} = 0.77 \qquad \text{for each row}$$

$$\eta = 1-(1-\eta_T)^4 \approx 0.997 \qquad \text{maximum efficiency}$$

In the above estimation, the effective number of rows was taken as 4. It is seen that the efficiency of deentrainment is almost 100 percent for fluids at hotter channels, even though much conservatism was introduced by eliminating many rods. This fact indicates no need for a sensitivity study of model internal arrangement and design.

D-7. Shape - Reactor upper plenum internals are basically in two shapes: circular cylinder (support column) and square column (guide tube). But it is proposed to simulate the internals by cylindrical rods based on the following reasons:

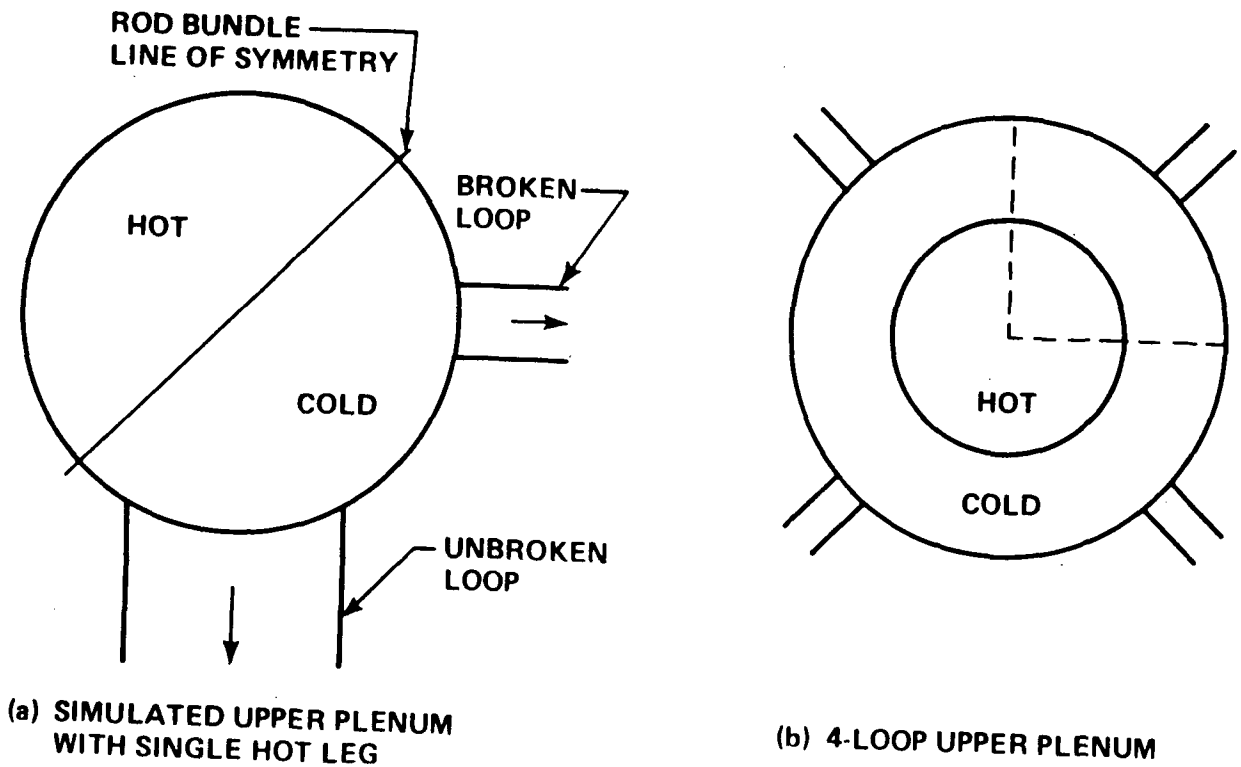

Figure D-9. Flow Splitting Scheme

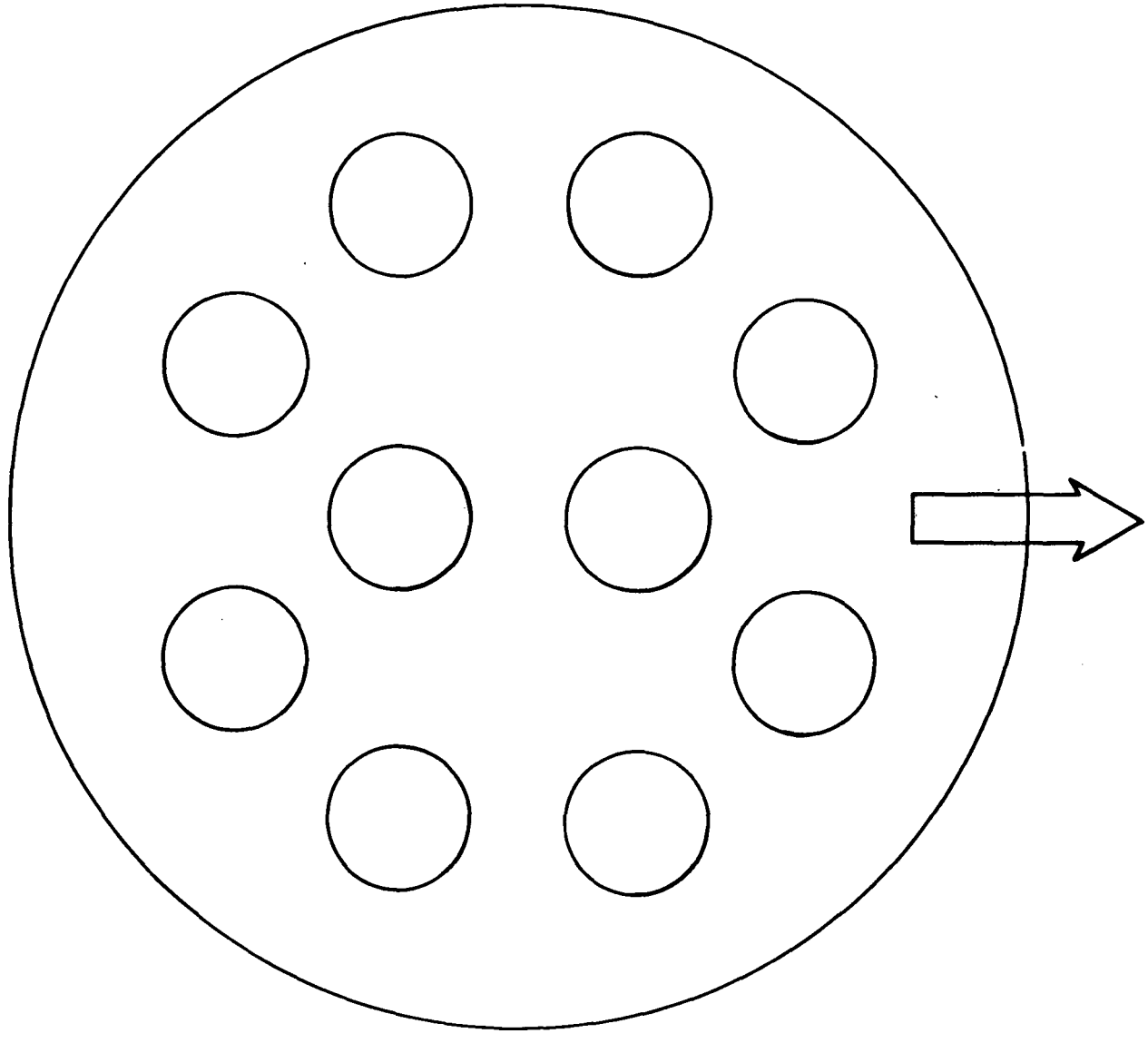

Figure D-10. Model Internals Arrangement

-- Porteus' entrainment experiment[1] showed almost identical entrainment velocity curves for a round rod of 3.8 cm (1.5 in.) diameter and a rod 3.0 cm (1.2 in.) square.

-- A preliminary upper plenum internal test at LASL[2] showed not much difference between circular and square columns.

-- Fluid approaches rods with various horizontal approach angles, as shown in figure D-11. This variation of approach angle is expected to average out the entrainment and deentrainment phenomena between circular rods and square columns.

D-8. Size - There is a report from LASL[3] which notes that deentrainment of liquid at a rod is relatively independent of diameter, surface finish, and array configuration. Therefore, it is proposed that internals of a single size be used in this model. The diameter of the rods can be determined by the scaling of flow area to give about 2.5 cm (1 in.). Using a 22.2 cm (8.75 in.) ID upper plenum, the rod diameter was calculated to be 2.954 cm (1.163 in.).

D-9. Rod Arrangement - The rods discussed above can be arranged in the model upper plenum to satisfy the following two conditions:

-- The gap between solid walls must be greater than about 1.9 cm (0.75 in.) to eliminate the wall effect on the flooding phenomenon.

-- The gap, rod diameter, and number of rows in the array should be comparable to the prototype to give a comparable phase separation.

---

1. Porteus, A., et al., "Pressurized Water Reactor Upper Head Injection Air-Water 1/30-Scale Entrainment Studies," NRC-0193-4, September 1977.

2. Kirchner, W., personal communication, March 1979.

3. Dallman, J. C., et al., "Deentrainment Phenomena From Droplet Cross Flow in Vertical Rod Bundles," paper presented at the Sixth Water Reactor Safety Research Meeting, Gaithersburg, MD, November 6-9th, 1978.

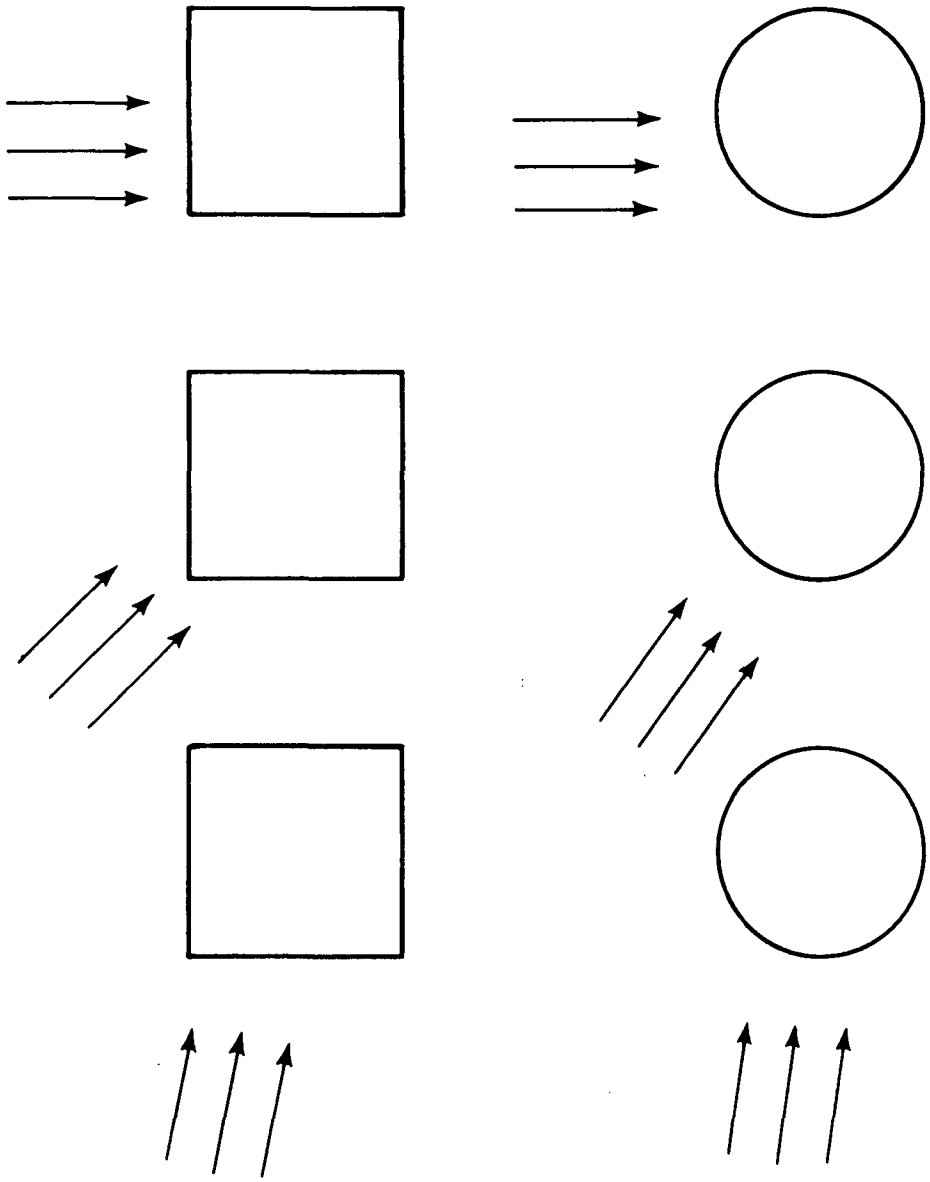

Figure D-11. Approach Angle Variation

The calculated results of necessary dimensions are shown in figure D-12.

D-10. Heat Release From Upper Plenum Wall and Internals

Since evaporation in the upper plenum was found to be negligible, it is proposed that the wall and internals have small heat content. One way to achieve this goal is to make the upper plenum wall thin and to use hollow cylinders as internals.

D-11. Design of Upper Core Plate

A portion of a real upper core plate which can cover the test rod bundle area may have either one complete opening or two half openings. The main interests in the upper core plate are the froth layer development above the plate and possible liquid counterflow to allow a fallback. If there is no froth layer on the plate, all entrained droplets will eventually flow to the hot leg; hence, there is no need for a complicated study of upper plenum behavior. Froth development requires a solid floor to build upon. Also, a floor must support internal structures in such a way that the deentrained droplets flow to the floor directly. A single-hole or double-hole scheme simply cannot meet the above requirements unless only one or two real-size internals are used (figure D-13a, b). Real-size internals used in such a small bundle are expected to distort flow field too much. Fallback through the upper core plate opening is governed by a flooding phenomenon. It has been shown in the previous discussion that flooding does not depend on the flow channel geometry if its equivalent diameter is large enough.

Therefore, it is suggested that the upper core plate be simulated by making 10 holes whose total flow area is scaled to the real flow area in the upper core plate (figure D-13c). This design satisfies the above requirements and also introduces the fluid into the upper plenum in a relatively distributed way.

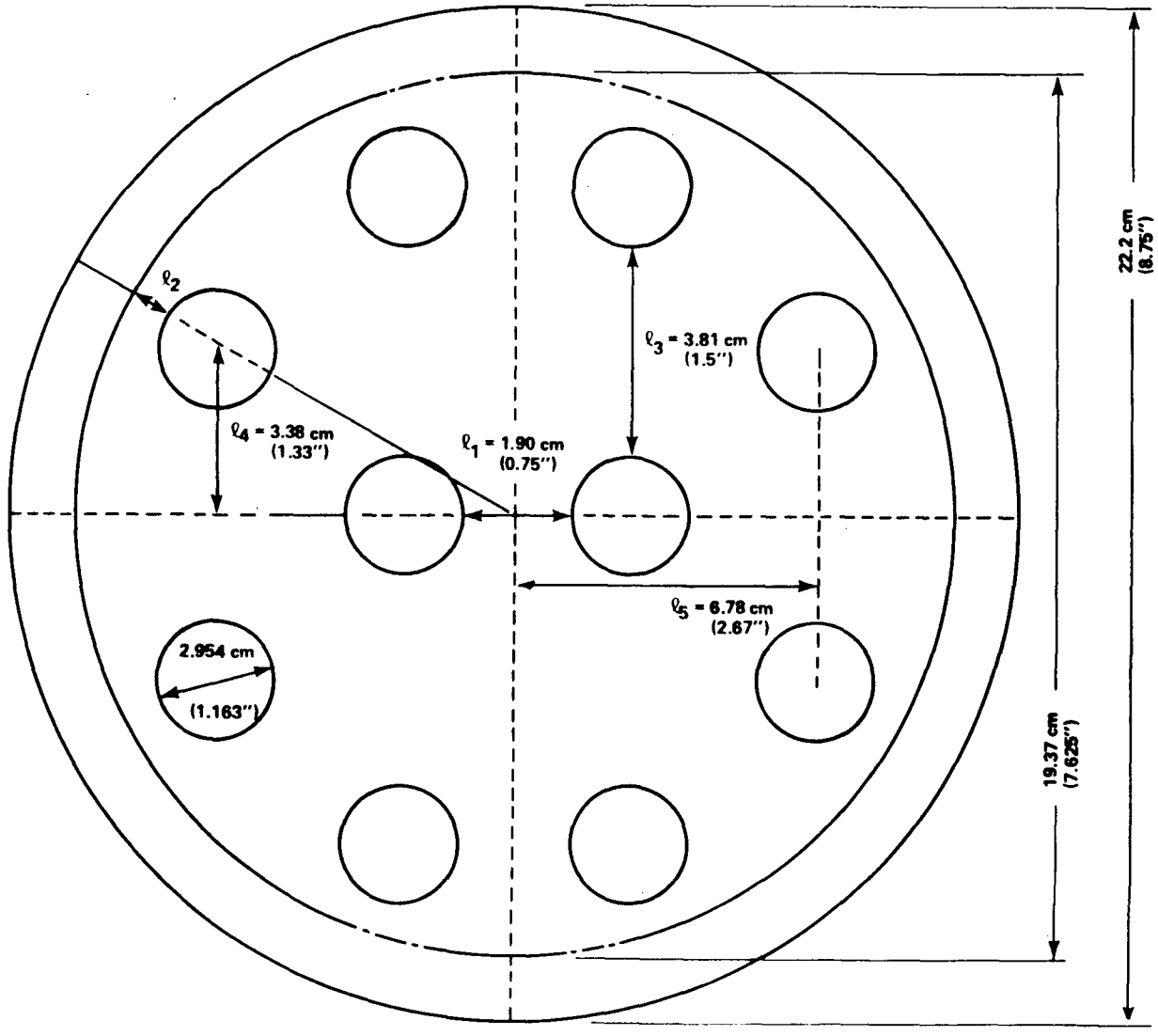

Figure D-12. Rod Arrangement

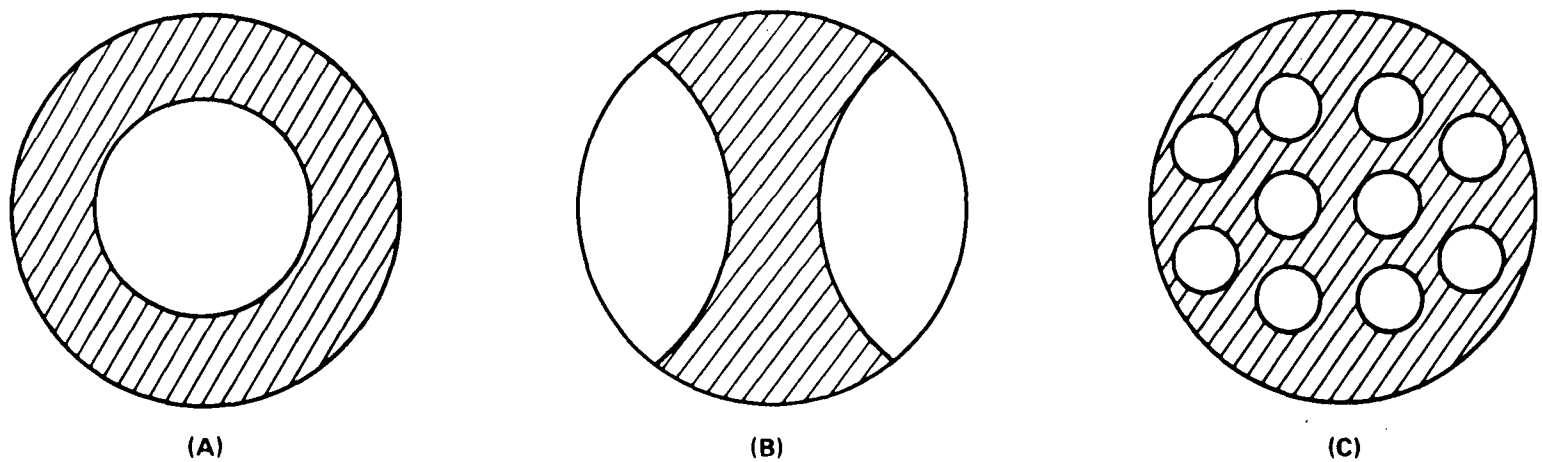

Figure D-13. Upper Core Plate

APPENDIX E

FACILITY DRAWINGS

The following drawings (in addition to those already cited in the body of this report) illustrate the systems effects test facility:

Figure No.	Title	Westinghouse Drawing No.
E-1	FLECHT SEASET Natural Circulation Loop Piping Details	1550E65 and 1550E66
E-2	FLECHT SEASET Natural Circulation Upper Plenum Column Details	1546E28
E-3	FLECHT SEASET Natural Circulation Upper Plenum Top Flange Details	1546E29
E-4	FLECHT SEASET Natural Circulation Bundle Thimble Details	1546E32
E-5	FLECHT SEASET Natural Circulation Bundle Filler Details	1546E35 Sheets 1 and 2
E-6	FLECHT SEASET Natural Circulation Bundle Grid Assembly	8763D58
E-7	FLECHT SEASET Natural Circulation Bundle Grid Details	8763D57 Sheets 1 through 7
E-8	FLECHT SEASET Natural Circulation Steam Supply Layout	L0974590

E-9	FLECHT SEASET Natural Circulation Low Mass Housing Lower Seal Plate	1463F33
E-10	FLECHT SEASET Natural Circulation Four-Heater-Rod Terminal Assembly	9550D67 9550D68
E-11	FLECHT SEASET Natural Circulation Single-Heater-Rod Terminal Assembly	9550D66
E-12	FLECHT SEASET Natural Circulation Bundle Heater Rod Terminal Cross-Sectional View at 3.78 m (12.42 ft) Elevation	976957L03
E-13	FLECHT SEASET Natural Circulation Bundle Bare and Heated Thermocouple Steam Probe Details	1550E51 Sheets 1 and 2

20616-107

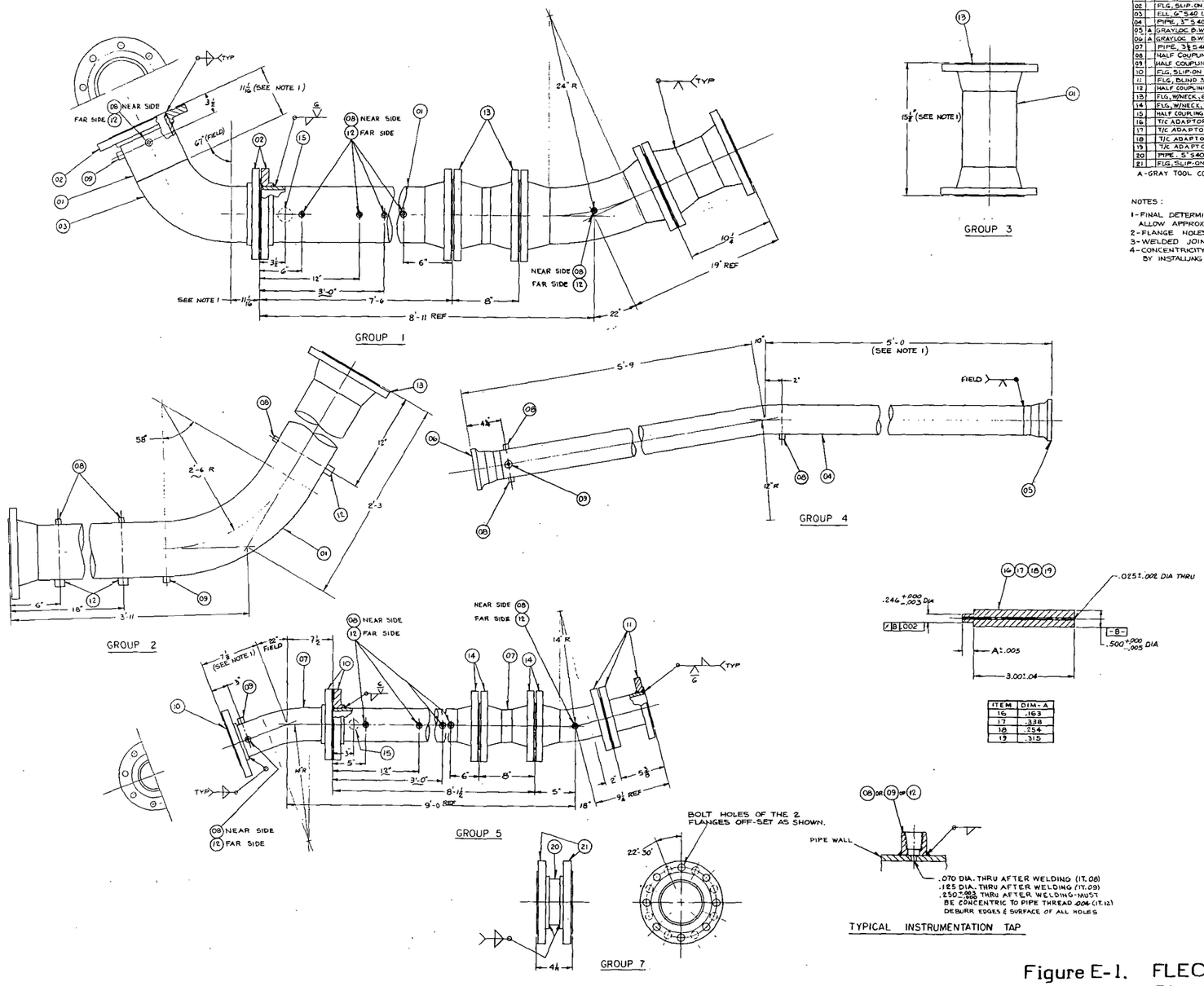

ITEM	DIM-A
16	.163
17	.338
18	.254
19	.315

BILL OF MATERIAL

ITEM	NOTE	PART NAME	DRAWING & GR OR IT.	MATERIAL	REQ PER GROUP 1	2	3	4	5	6	7
01		PIPE, 6" S 40		C. STL	6	1					
02		FLG, SLIP-ON, 6" 150 LB			3						
03		ELL, 6" S 40 L.R. 90°			1						
04		PIPE, 3" S 40						1			
05	A	GRAYLOC B.W. HUB 3 GR 27	52204								
06	A	GRAYLOC B.W. HUB 3 GR 25	52226						1		
07		PIPE, 3½ S 40								5	
08		HALF COUPLING ¼ NPT 3000LB			6	3		3	6		
09		HALF COUPLING ¼ NPT 3000LB			1	1			1		
10		FLG, SLIP-ON 3½ 150 LB							3		
11		FLG, BLIND 3" 150 LB							3		
12		HALF COUPLING ¼ NPT 3000LB			6	3			6		
13		FLG, W/NECK, 6" 150 LB			7	2	2				
14		FLG, W/NECK, 3" 150 LB								4	
15		HALF COUPLING 1" NPT			1				1		
16		T/C ADAPTOR PLUG		SST							1
17		T/C ADAPTOR PLUG									1
18		T/C ADAPTOR PLUG									1
19		T/C ADAPTOR PLUG									1
20		PIPE, 5" S 40		C. STL							1
21		FLG, SLIP-ON 5" 150 LB		C. STL							2

A-GRAY TOOL CO. HOUSTON, TEXAS

NOTES:

1-FINAL DETERMINATION OF THIS DIM. TO BE MADE IN FIELD. ALLOW APPROX 12" ADDITIONAL LENGTH OVER GIVEN DIM.
2-FLANGE HOLES TO STRADDLE ℄ AS SHOWN.
3-WELDED JOINTS MUST BE FLAT & SMOOTH @ I.D.
4-CONCENTRICITY OF MATING FLGS MUST BE MAINTAINED BY INSTALLING DOWEL PINS. SEE DETAIL 'A' ON DWG 1550E66

Figure E-1. FLECHT SEASET Natural Circulation Loop Piping Details (sheet 1 of 2)

20616-96

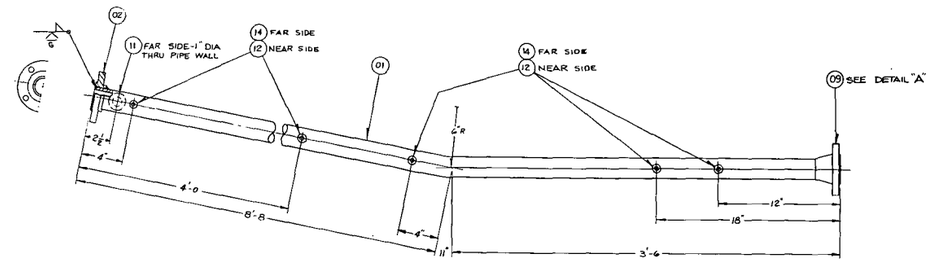

GROUP 1

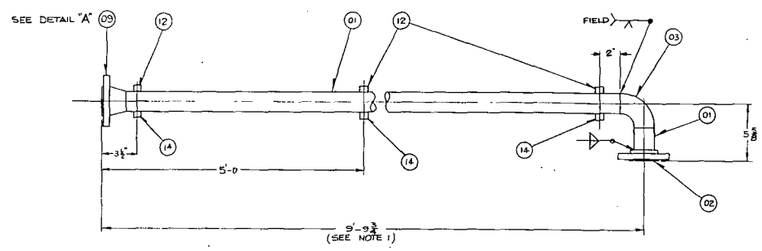

GROUP 2

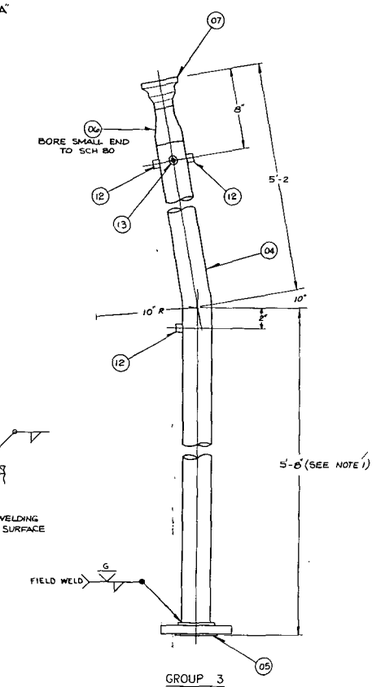

GROUP 3

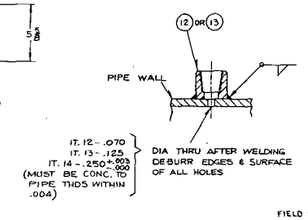

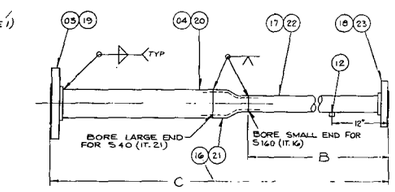

GROUP 5 & 6

GR	B	C
5	2'-1"	4'-8⅜"
6	3'-4"	4'-8⅜"

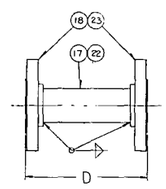

GROUP 7 & 8

GR	D
7	6"
8	6⅛"

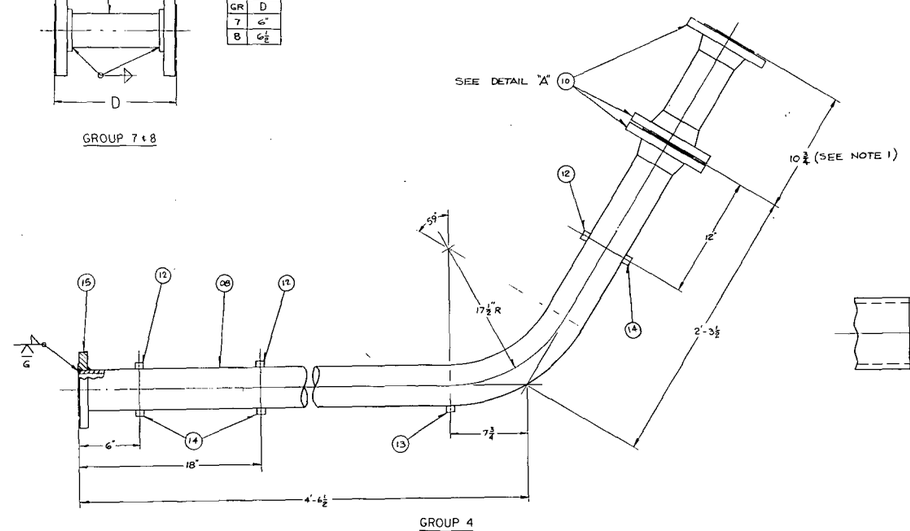

GROUP 4

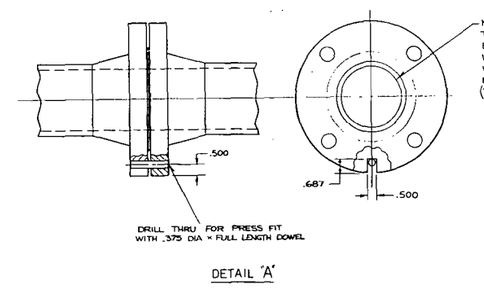

DETAIL "A"

MEASURE I.D. OF BOTH PIECES OF PIPE. BORE EACH FLANGE TO SUIT MATING PIPE. ALIGN MATING FLANGES AT BOTTOM EDGE OF I.D., BOLT TOGETHER & INSTALL DOWEL. ALIGN W/NECK WITH MATING PIPE & WELD. HAND GRIND INSIDE WELD FLUSH, WITH PARTICULAR ATTENTION TO WELD ON BOTTOM. MINIMIZE BASE METAL REMOVED. STAMP IDENT "BOTTOM" ON EDGE OF FLG. (THE SLOT TO BE CUT IN THE SHORT SPOOL)

BILL OF MATERIAL

ITEM	NOTE	PART NAME	DRAWING & OR OR IT.	MATERIAL	REQ PER GROUP 1	2	3	4	5	6	7	8
01		PIPE 1½ SCH 40		C. STL	1	2						
02		SLIP ON FLG 1½-150 LB			1	1						
03		ELBOW 1½ SCH 40 90° L.R.				1						
04		PIPE 2½ XX STR					1		1			
05		SLIP-ON FLG 2½-150LB					1		1			
06		REDUCER 2½ × 1½ XX STR					1					
07	A	GRAYLOC B.W. HUB 1½ GR 14	52101				1					
08		PIPE, 3½ S 40						2				
09		FLANGE, W.N. 1½-150LB			4	4						
10		FLANGE, W.N. 3½-150LB						4				
11		BONNEY THD-O-LET 1" NPT S40			4							
12		HALF COUPLING ⅜ NPT-3000 LB			5	3	3	3	1	1		
13		HALF COUPLING ⅜ NPT-3000 LB					1	1				
14		HALF COUPLING ½ NPT-3000 LB			5	3		3				
15		BLIND FLG 3" 150 LB						1				
16		REDUCER 2½ × 1¼ XX STR							1			
17		PIPE 1¼ S 160							1			1
18		SLIP-ON FLG 1¼-150 LB							1			2
19		SLIP-ON FLG 3"-150 LB							1			
20		PIPE, 3" S. 80							1			
21		REDUCER, 3" × 2" S. 80							1			
22		PIPE, 2" S. 80							1			1
23		SLIP-ON FLG 2"-150 LB							1			2

A - GRAY TOOL CO. HOUSTON, TEXAS

NOTES:
1 - FINAL DETERMINATION OF THIS DIM. TO BE MADE IN FIELD. ALLOW APPROX 12" ADDITIONAL LENGTH OVER GIVEN DIM.
2 - FLANGE HOLES TO STRADDLE ℄ AS SHOWN.

Figure E-1. FLECHT SEASET Natural Circulation Loop Piping Details (sheet 2 of 2)

20616-69

BILL OF MATERIAL								
ITEM	NO. REQ'D	PART NAME	DRAWING & OR OR IT.	MATERIAL	REQ. PER GROUP			
					01	02	03	04
01		PLATE		C. STL	1	-		
02		TUBE		C. STL	1	-		
03		PLUG		C. STL	1	-		
04		T/C WELL		C. STL	1	-		
05		COLLAR		200 NICKEL	-	1		
06	B	THERMOCOUPLE			-	1		

B - .040 DIA SST SHEATH TYPE K, MAGNESIUM OXIDE INSULATION. UN-GRD'D JUNCTION, COLD END STRIPPED & SEALED.

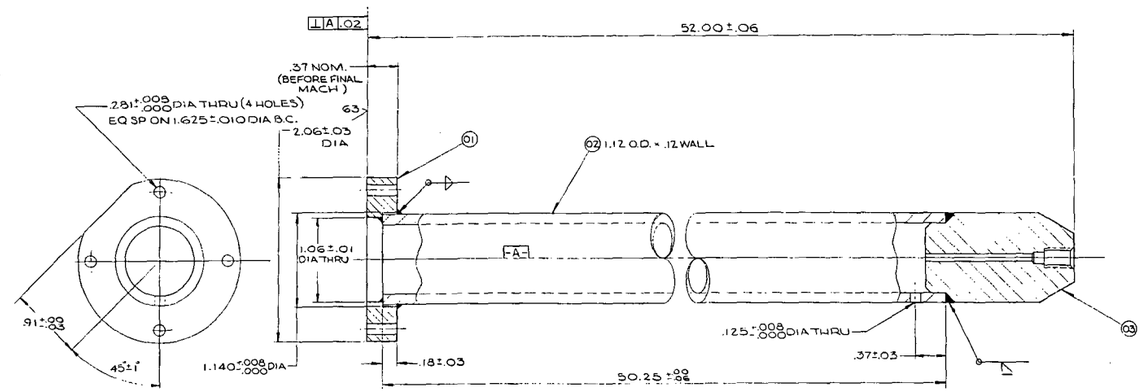

GROUP 01

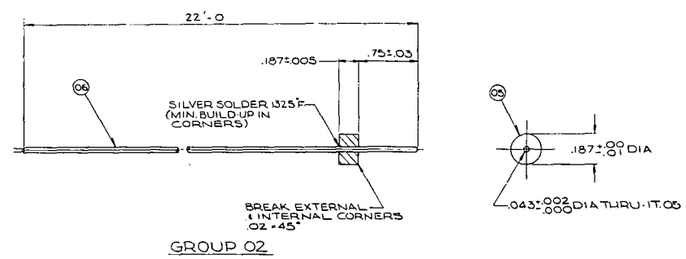

GROUP 02

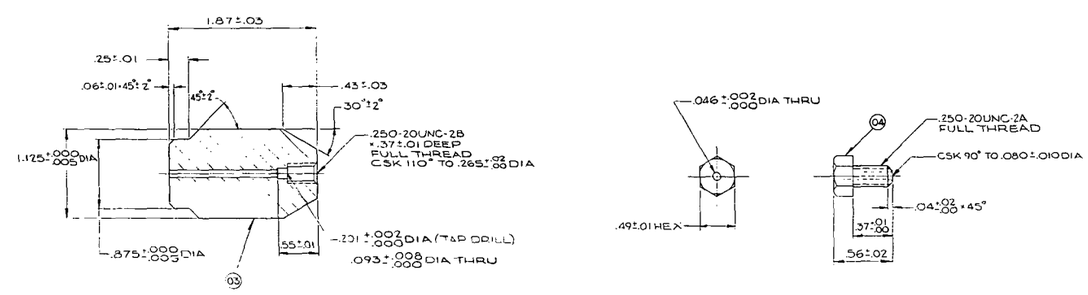

Figure E-2. FLECHT SEASET Natural Circulation Upper Plenum Column Details

20616-55

BILL OF MATERIAL								
ITEM	REV	PART NAME	DRAWING & SIZE OR IT	MATERIAL	REQ. PER GROUP			
					PR	SR	PR	SR
01		TOP FLANGE		SA515GR.G5	1			

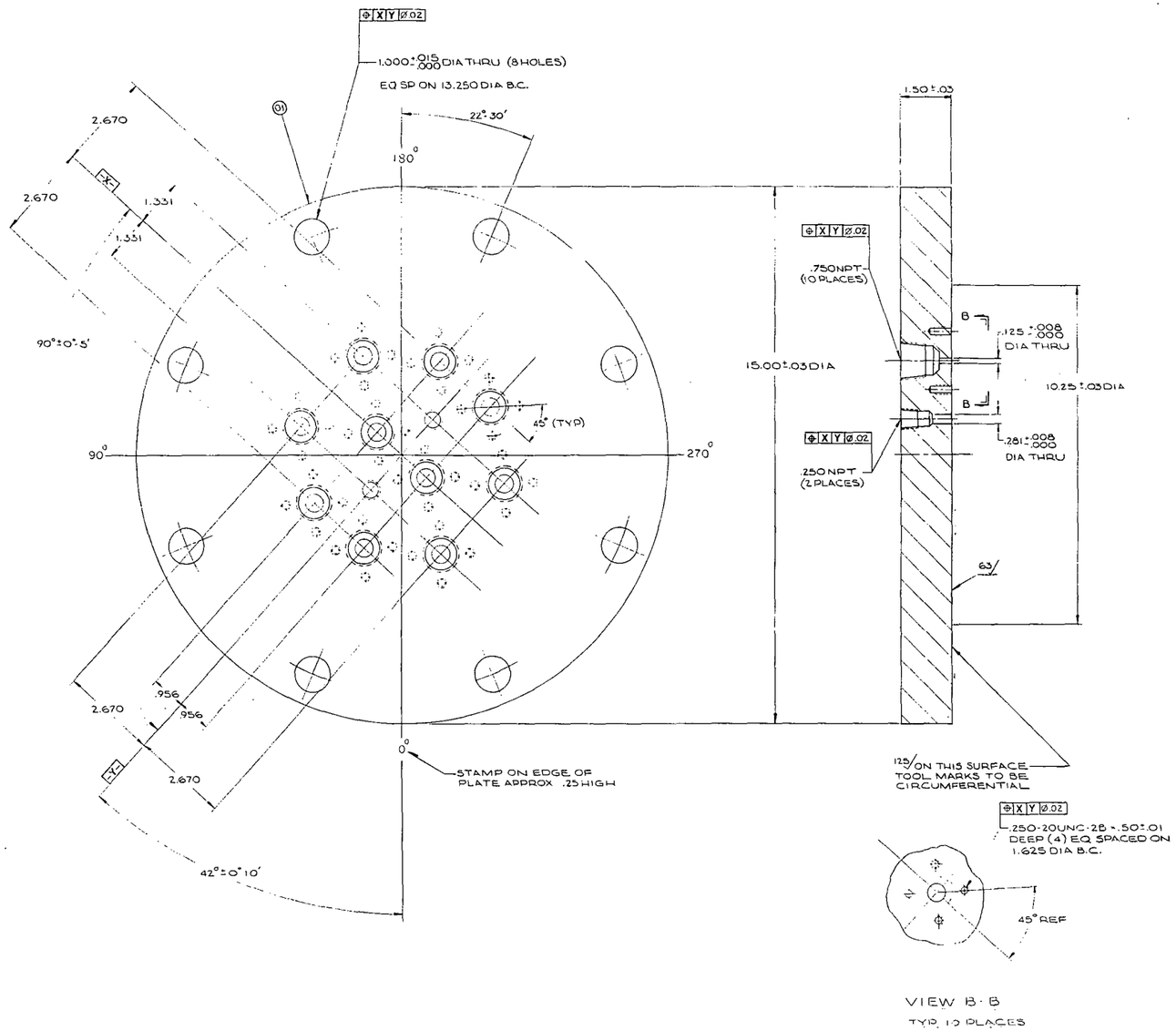

Figure E-3. FLECHT SEASET Natural Circulation Upper Plenum Top Flange Details

20616-83

ITEM	QTY	PART NAME	DRAWING & GR OR IN	MATERIAL	QTY PER GROUP 01	02	03	04
01		DUMMY ROD		SEE NOTE-Y	1	—		
02		END SUPPORT		SEE NOTE-Z	1	—		
03		END PLUG		SEE NOTE-Z	1	—		
04		TUBE		SEE NOTE-Z	1	—		
05		FILLER STRIP		ALUM 2024-T4	—	1		
06		FILLER STRIP		ALUM 2024-T4	—	1		
07		END PLUG		SEE NOTE-Z	—	1		

Z - ASTM A213 TYPE 304

NOTES:

1. MAKE FROM .500 O.D. × .049 WALL SST TUBING CENTERLESS GRIND O.D. TO .474 ±.003 DIA.

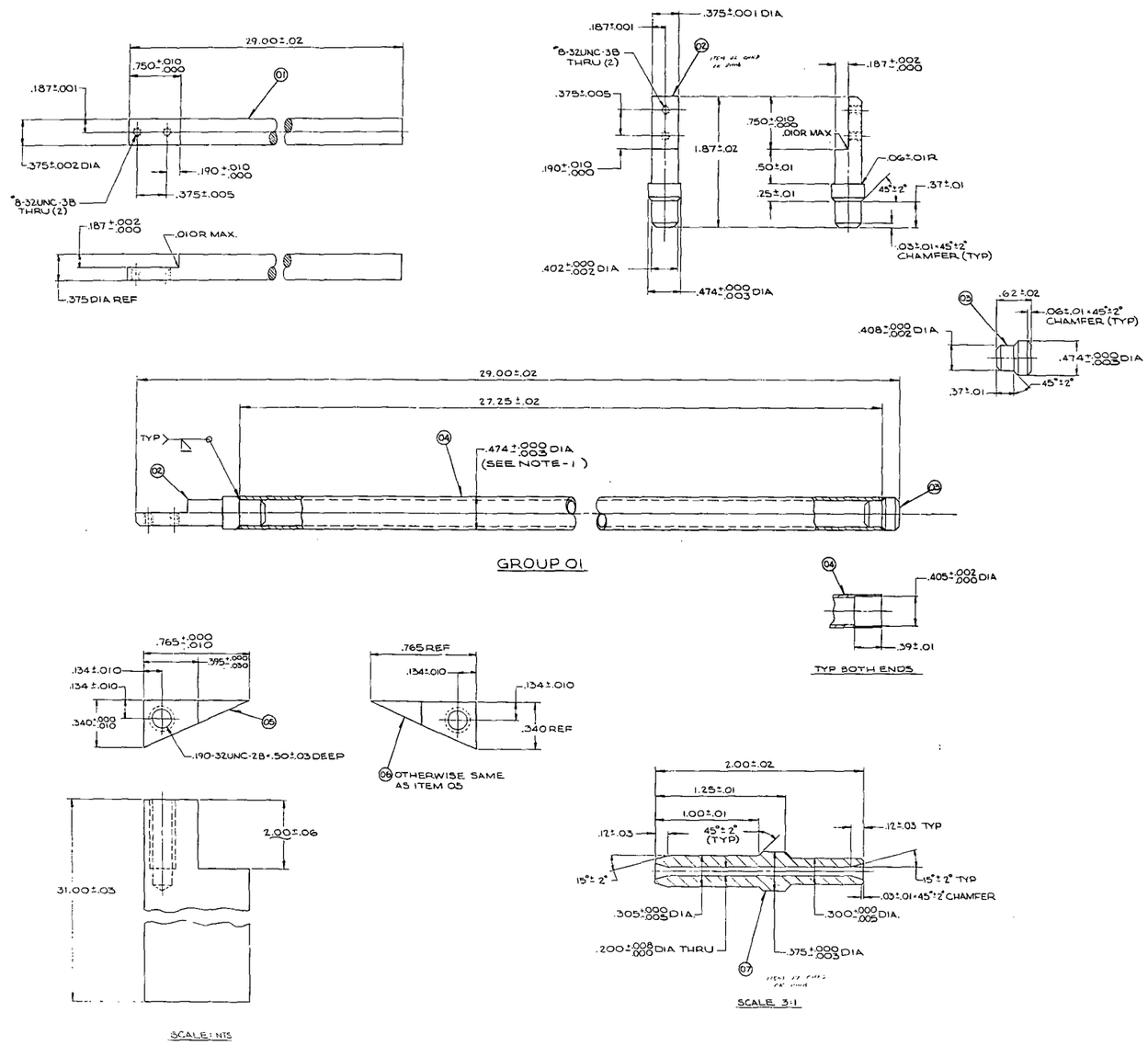

Figure E-4. FLECHT SEASET Natural Circulation Bundle Thimble Details

20616-91

BILL OF MATERIAL

ITEM	QTY	PART NAME	DRAWING & OR SP. NO.	MATERIAL	REQ. PER GROUP			
					01	02	03	04
01		FILLER STRIP		NOTE-1	-	-		
02		FILLER STRIP		NOTE-2	-	-		
03		FILLER STRIP		NOTE-2	-	-		
04		FILLER STRIP		NOTE-2	-	-		
05		FILLER STRIP		NOTE-2	-	-		
06		FILLER STRIP		NOTE-2	-	-		
07		FILLER STRIP		NOTE-2	-	-		
08		FILLER STRIP		NOTE-2	-	-		

2 - MK FR 'INVAR 36' FREE CUT ROD .375 × .750

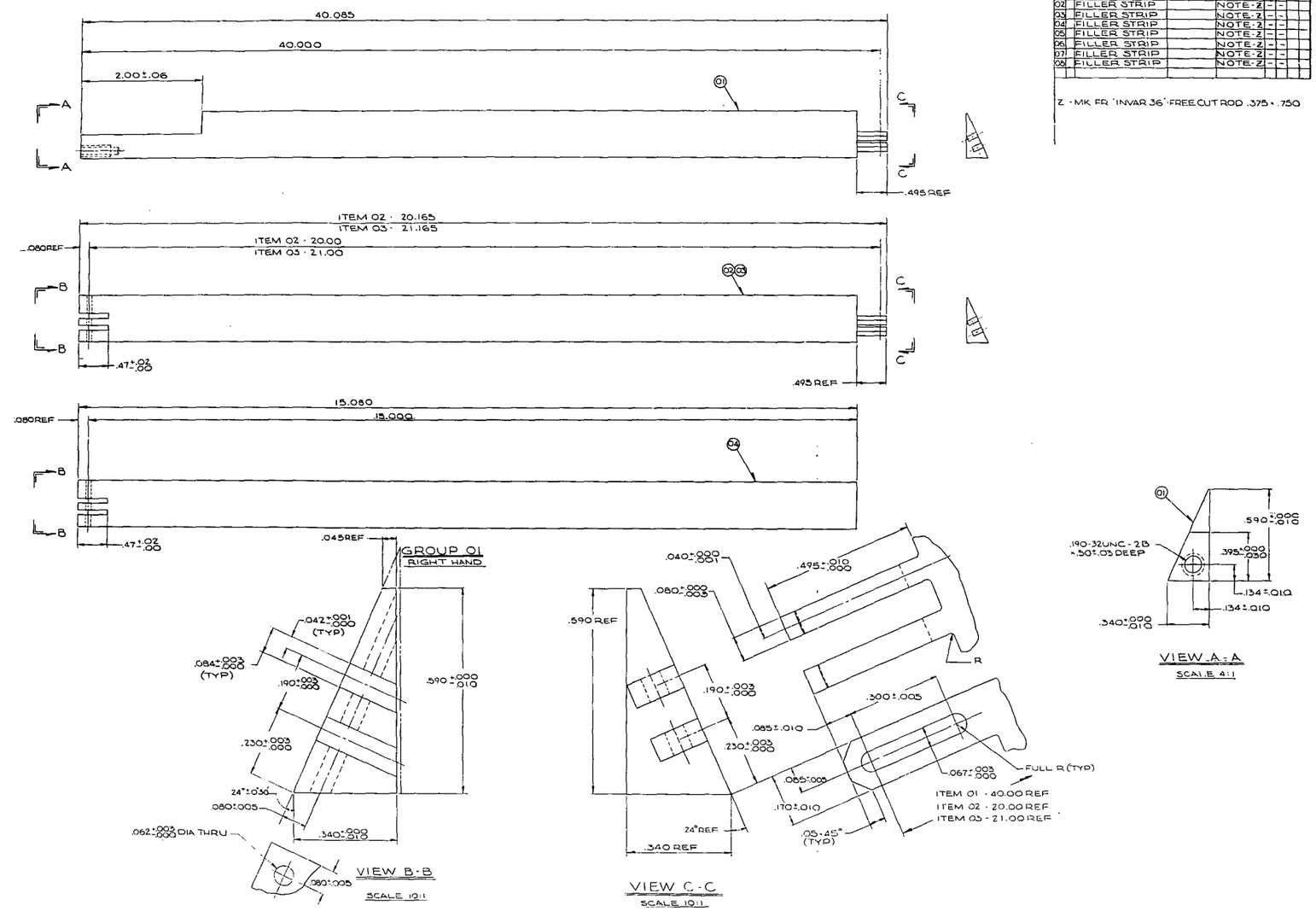

Figure E-5. FLECHT SEASET Natural Circulation Bundle Filler Details (sheet 1 of 2)

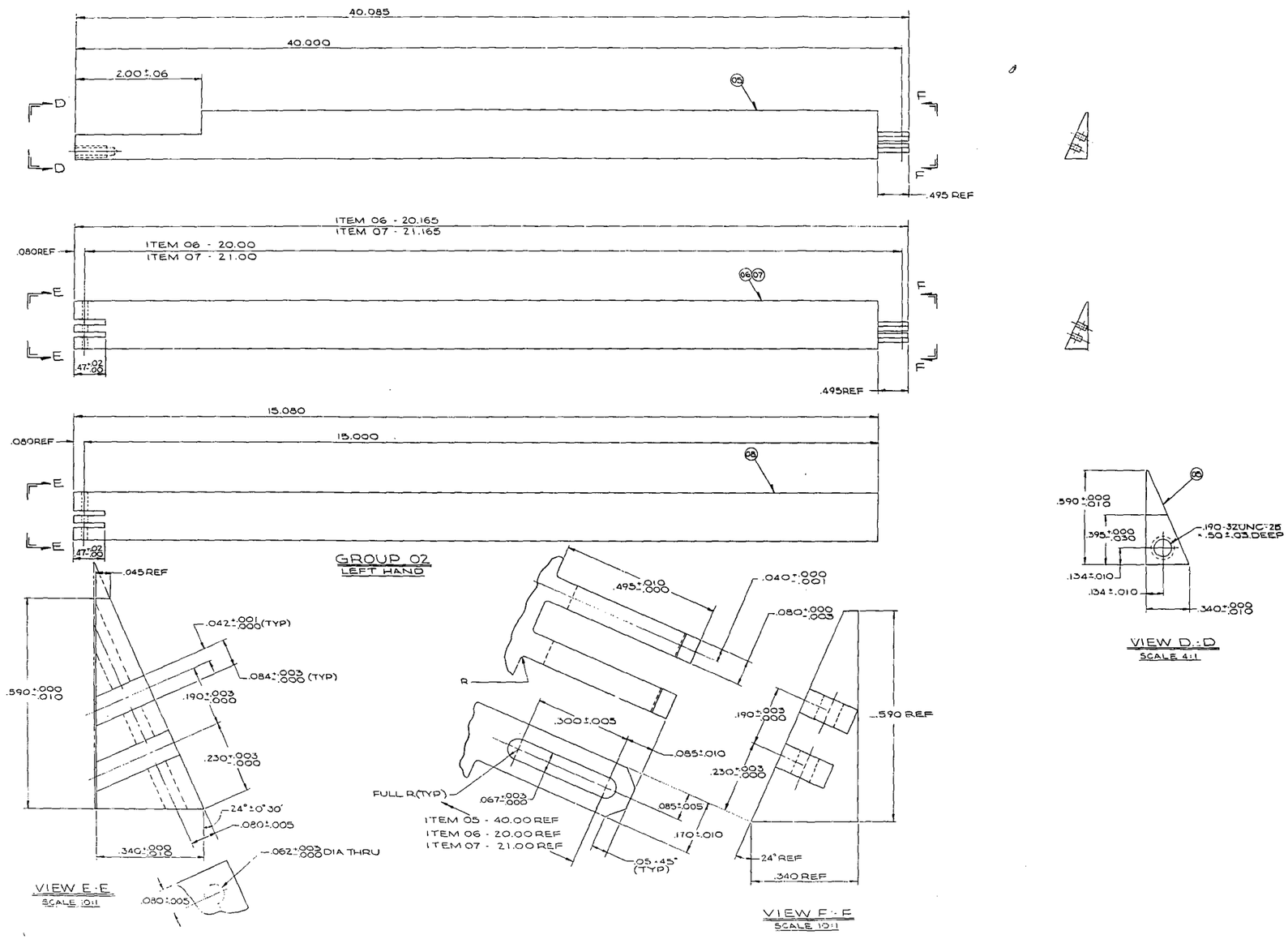

Figure E-5. FLECHT SEASET Natural Circulation Bundle Filler Details (sheet 2 of 2)

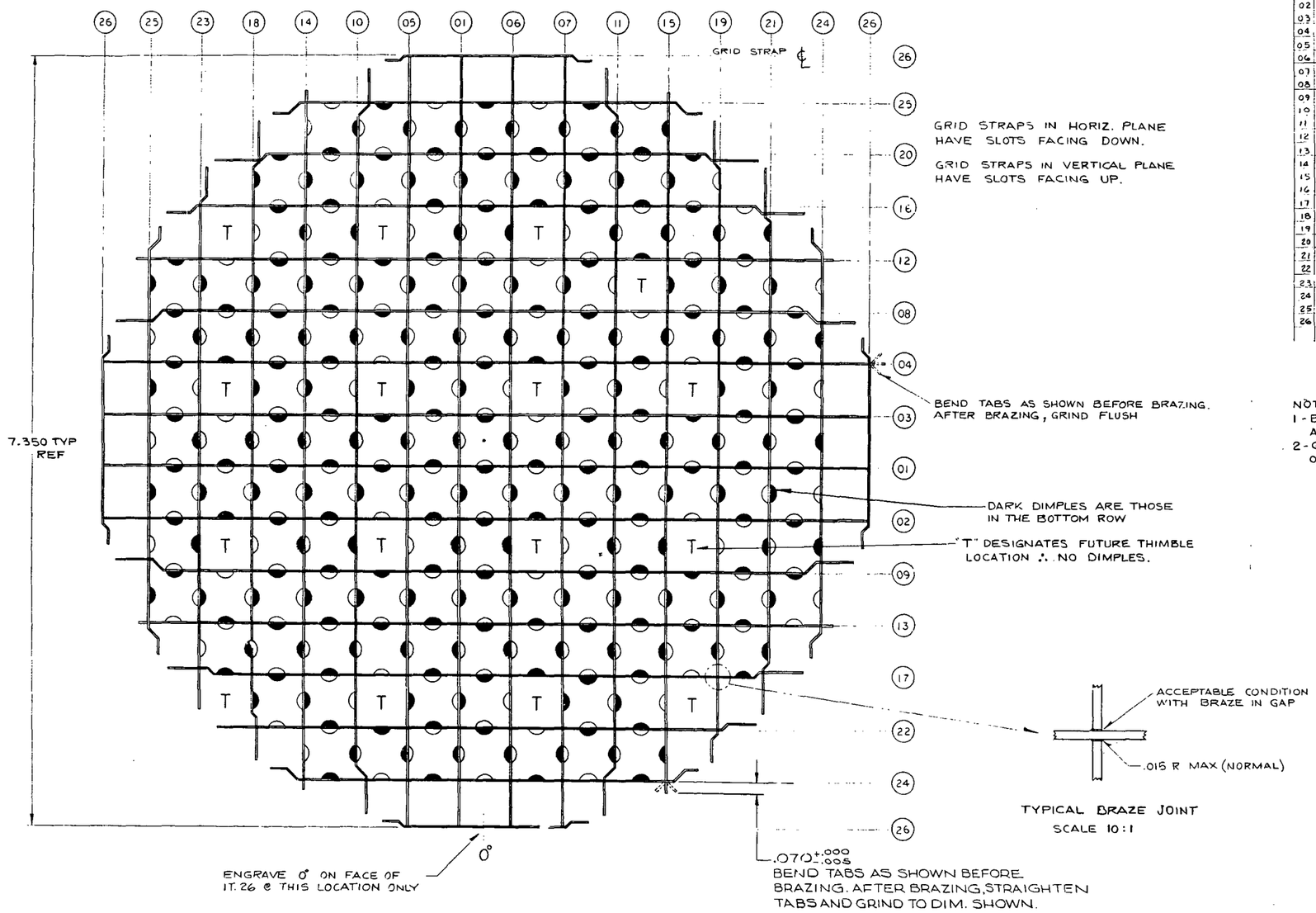

BILL OF MATERIAL

ITEM	PART NAME	PART NO.	MATERIAL	REQ. PER GROUP 01	02	03	04
01	GRID STRAP	8763D57-IT.01		2	2		
02		02		1	1		
03		03		1	1		
04		04		1	1		
05		05		1	1		
06		06		1	1		
07		07		1	1		
08		08		1	1		
09		09		1	1		
10		10		1	1		
11		11		1	1		
12		12		1	1		
13		13		1	1		
14		14		1	1		
15		15		1	1		
16		16		1	1		
17		17		1	1		
18		18		1	1		
19		19		1	1		
20		20		1	1		
21		21		1	1		
22		22		1	1		
23		23		1	1		
24		24		2	2		
25		25		2	2		
26	GRID STRAP	8763D57-IT.26		4	4		

NOTES:
1 - BRAZE PER W PROC. SPEC. CAP 595151 - DELETE THE AGING CYCLE.
2 - GRID ASSY MUST PASS THRU AN INSPECTION ENVELOPE OF 7.525 DIA.

Figure E-6. FLECHT SEASET Natural Circulation Bundle Grid Assembly

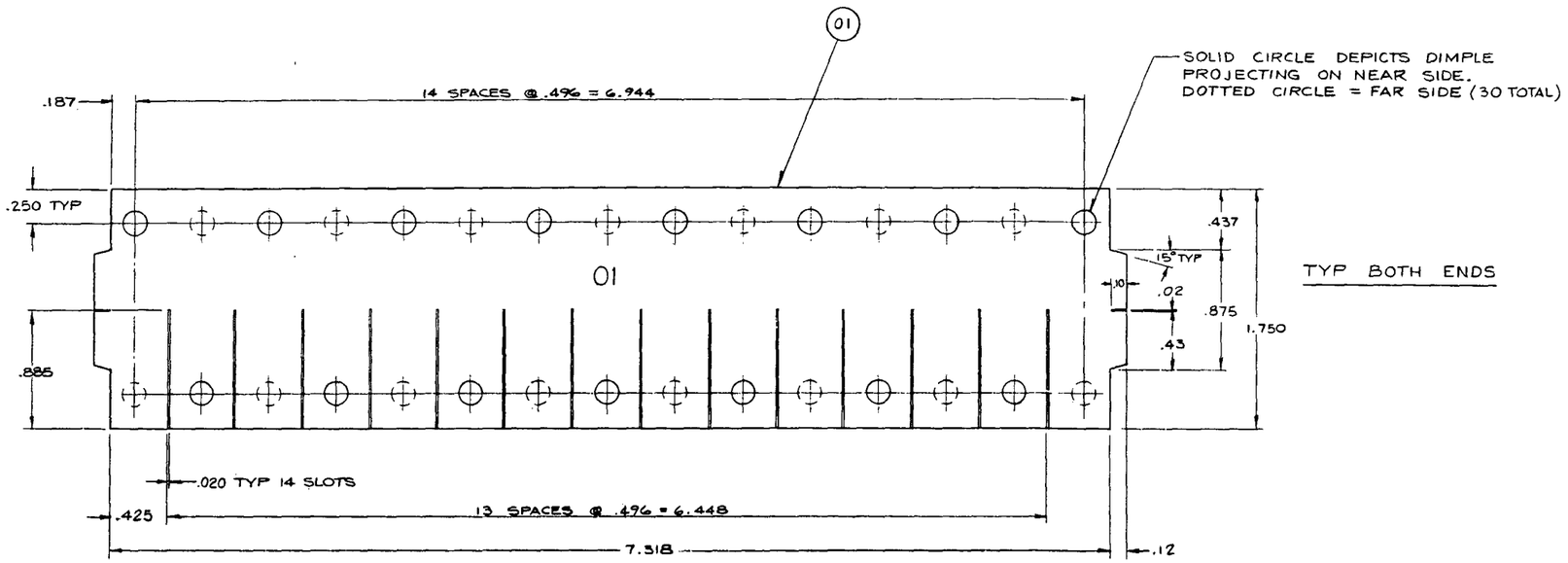

TYP BOTH ENDS

BILL OF MATERIAL								
ITEM		PART NAME	PART NO.	MATERIAL	REQ. PER GROUP			
					01	02	03	04
01		GRID STRAP .015 THK		INCONEL 718				
02								
03								
04								
05								
06								
07								
08								
09								
10								
11								
12								
13								
14								
15								
16								
17								
18								
19								
20								
21								
22								
23								
24								
25								
26		GRID STRAP .015 THK		INCONEL 718				

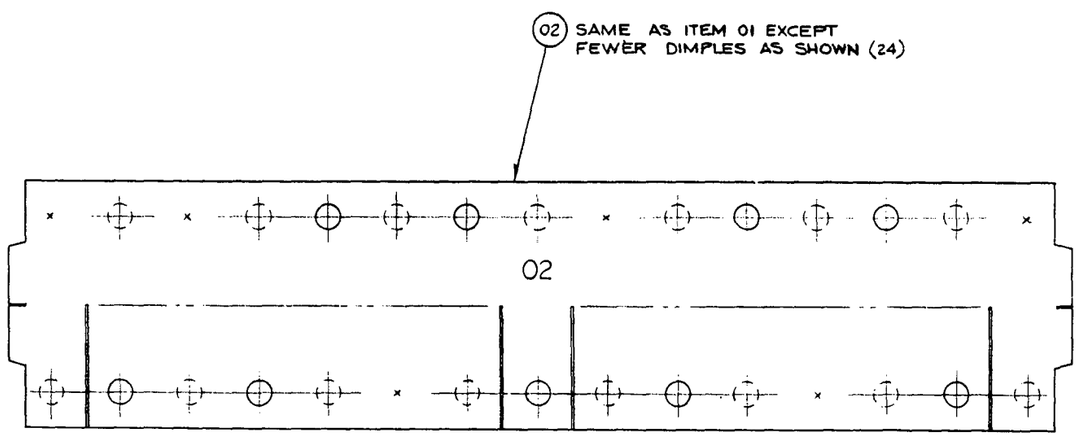

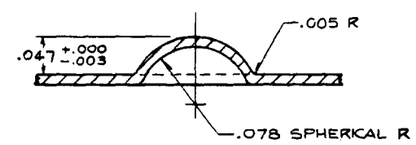

TYPICAL DIMPLE
SCALE 10:1

NOTES:
1 - ALL GRID STRAPS ARE THE SAME HEIGHT, THICKNESS & HAVE THE SAME DIMPLE SIZE & SLOT SIZE. DIMPLE POSITIONS ARE AS SHOWN @ EACH VIEW.
2 - ENGRAVE .12 HIGH ITEM NO. AS SHOWN ON EACH STRAP.

Figure E-7. FLECHT SEASET Natural Circulation Bundle Grid Details (sheet 1 of 7)

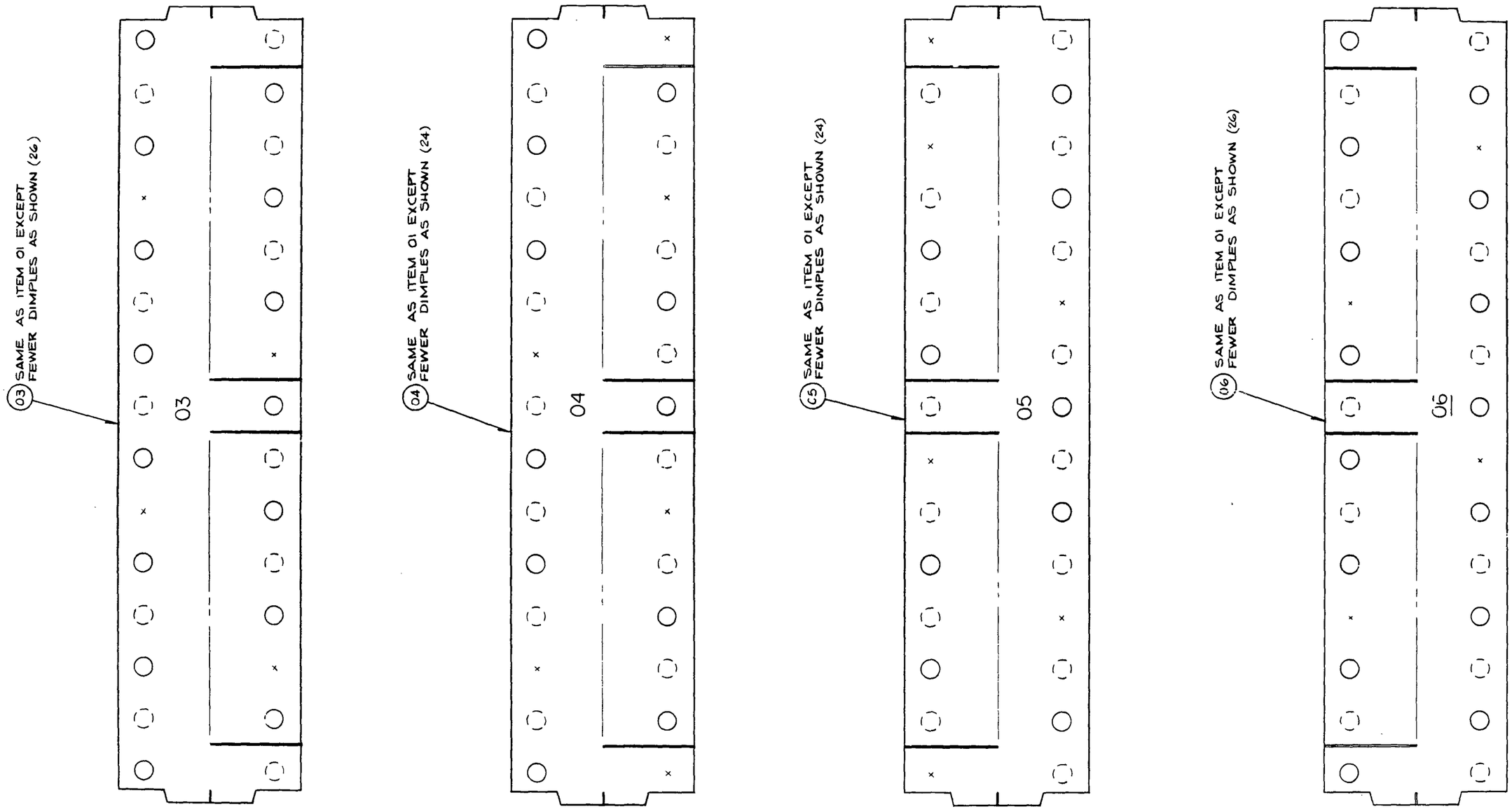

Figure E-7. FLECHT SEASET Natural Circulation Bundle Grid Details (sheet 2 of 7)

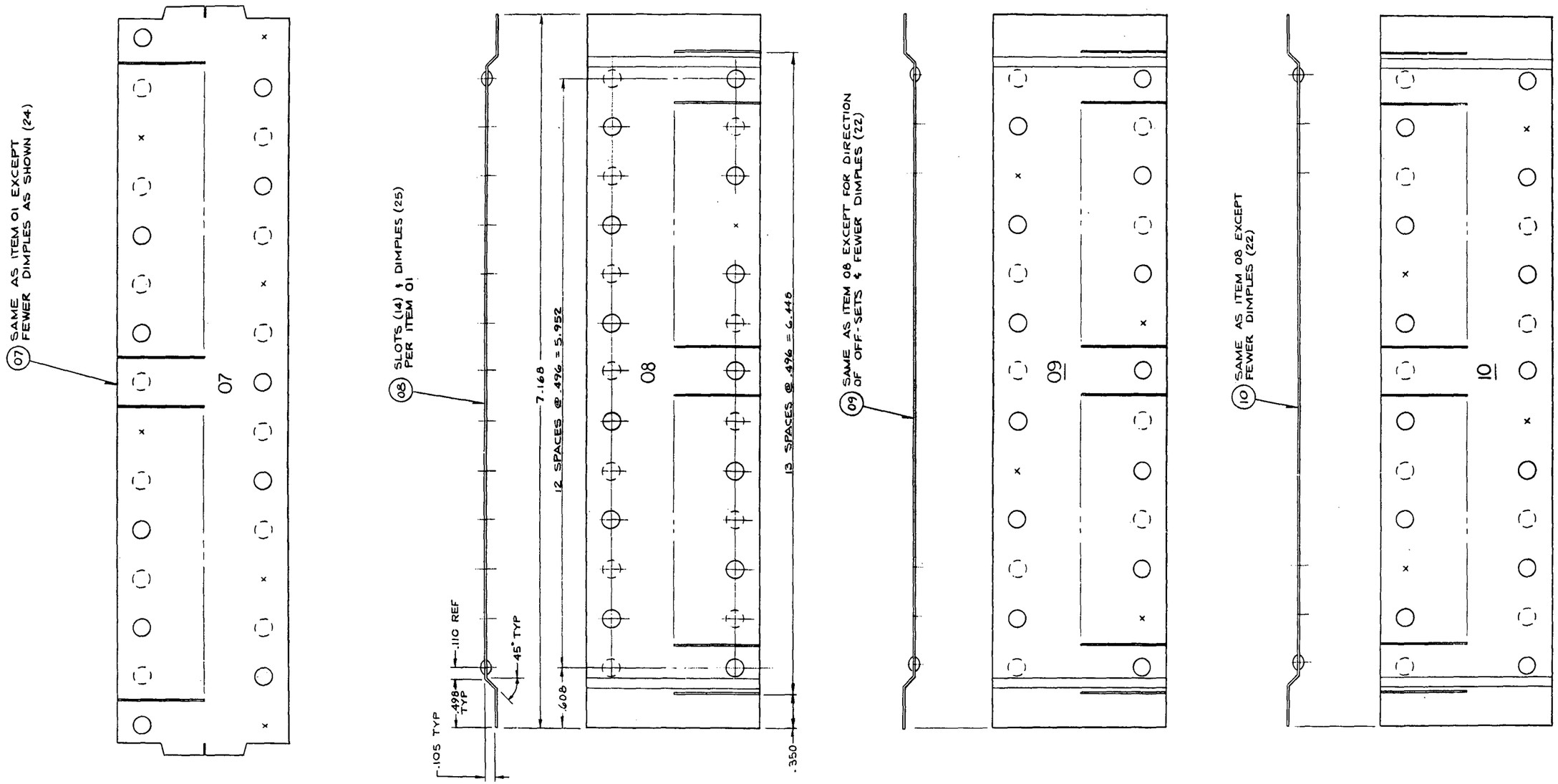

Figure E-7. FLECHT SEASET Natural Circulation Bundle Grid Details (sheet 3 of 7)

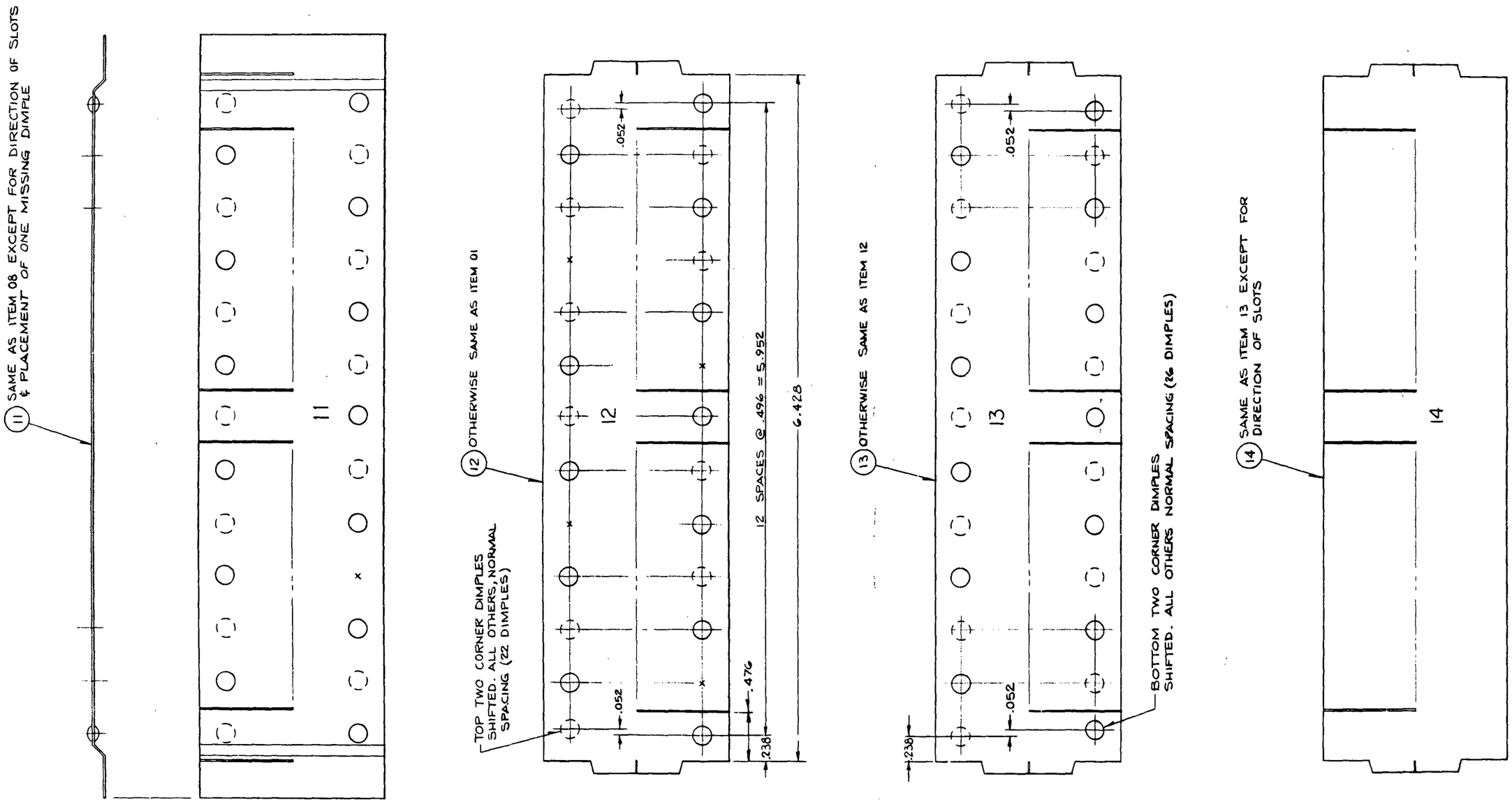

Figure E-7. FLECHT SEASET Natural Circulation Bundle Grid Details (sheet 4 of 7)

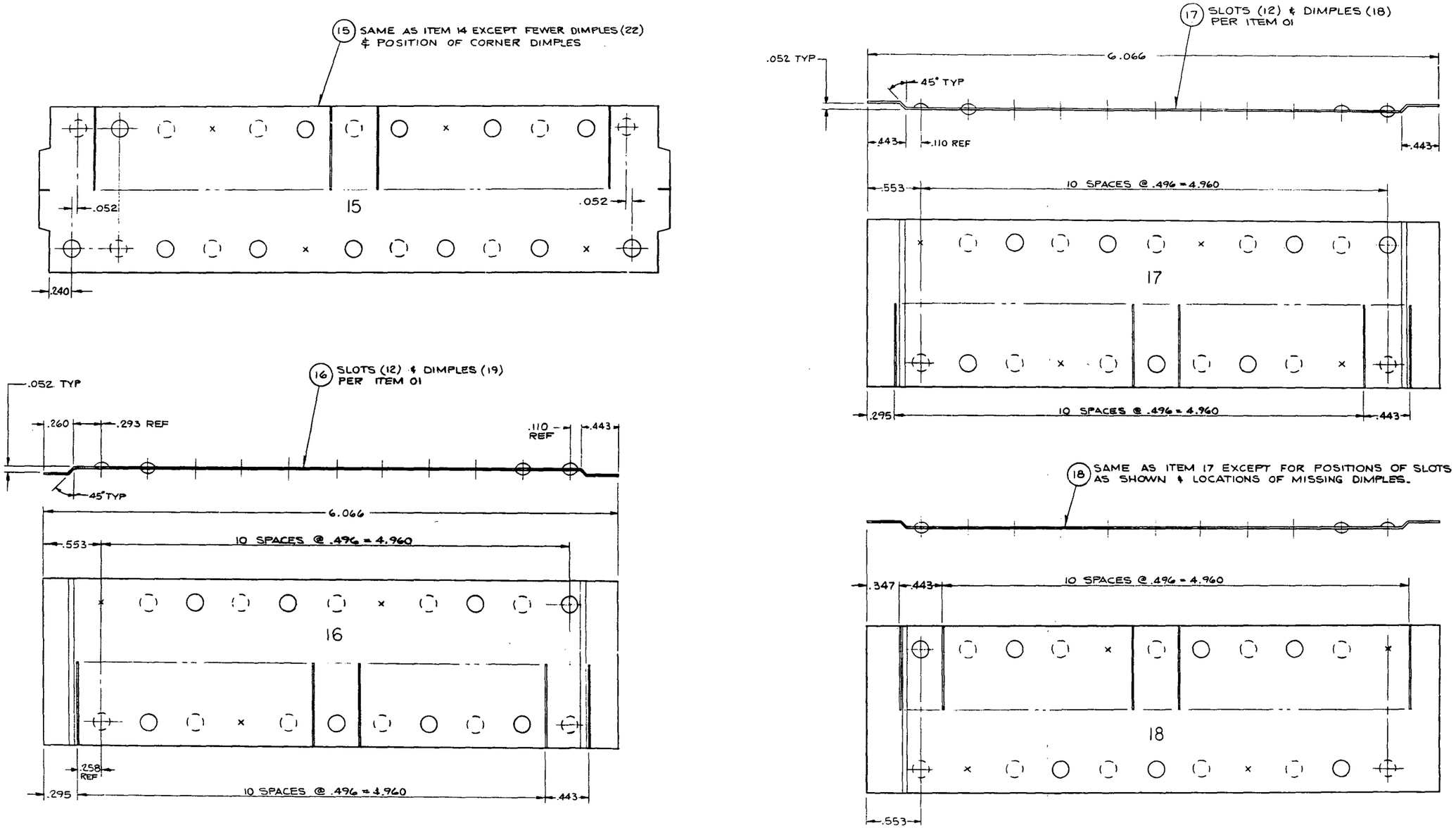

Figure E-7. FLECHT SEASET Natural Circulation Bundle Grid Details (sheet 5 of 7)

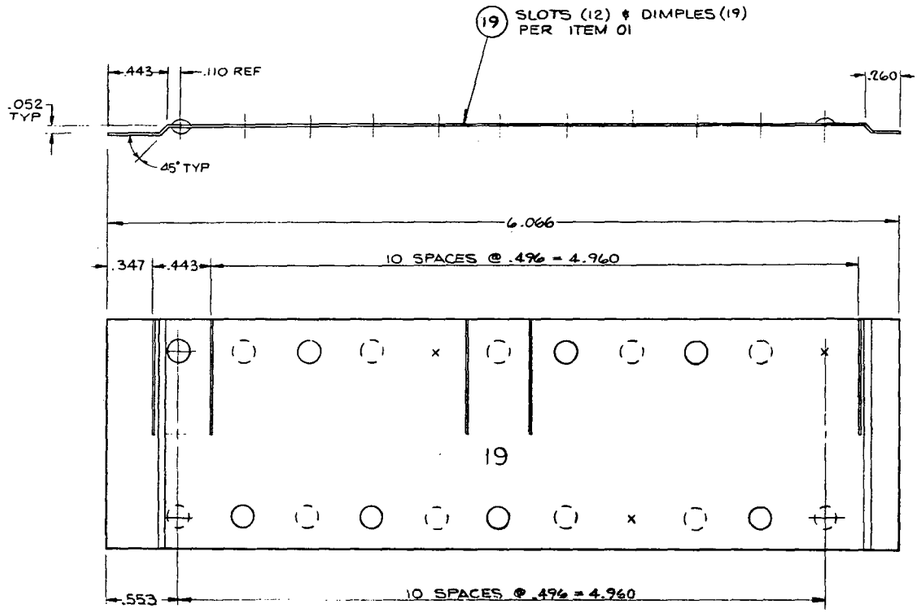

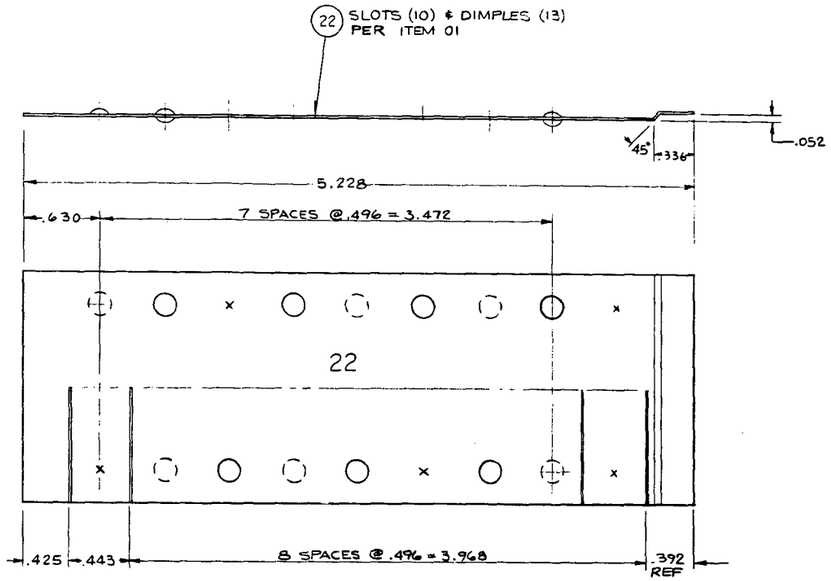

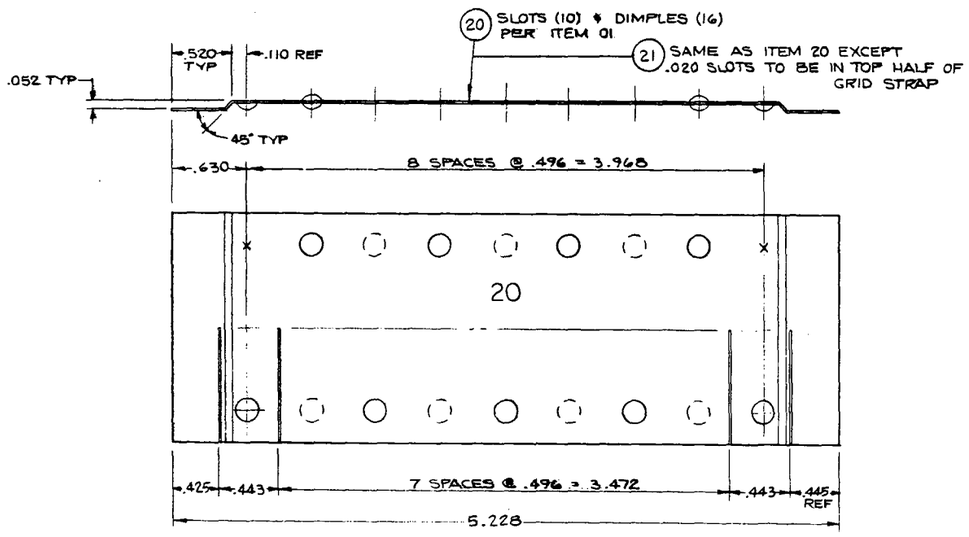

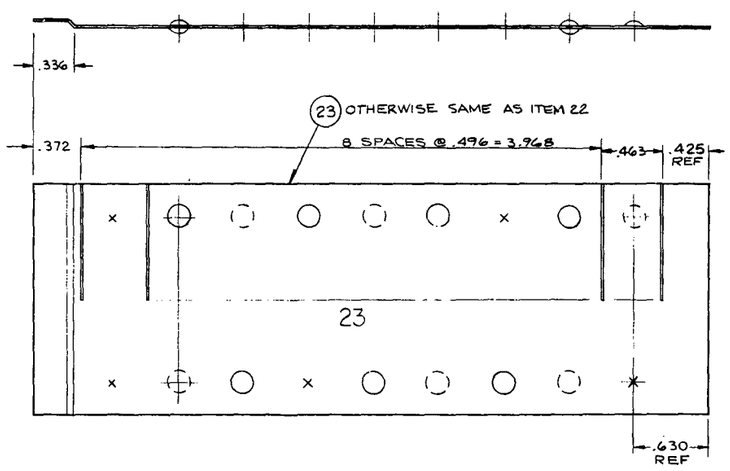

Figure E-7. FLECHT SEASET Natural Circulation Bundle Grid Details (sheet 6 of 7)

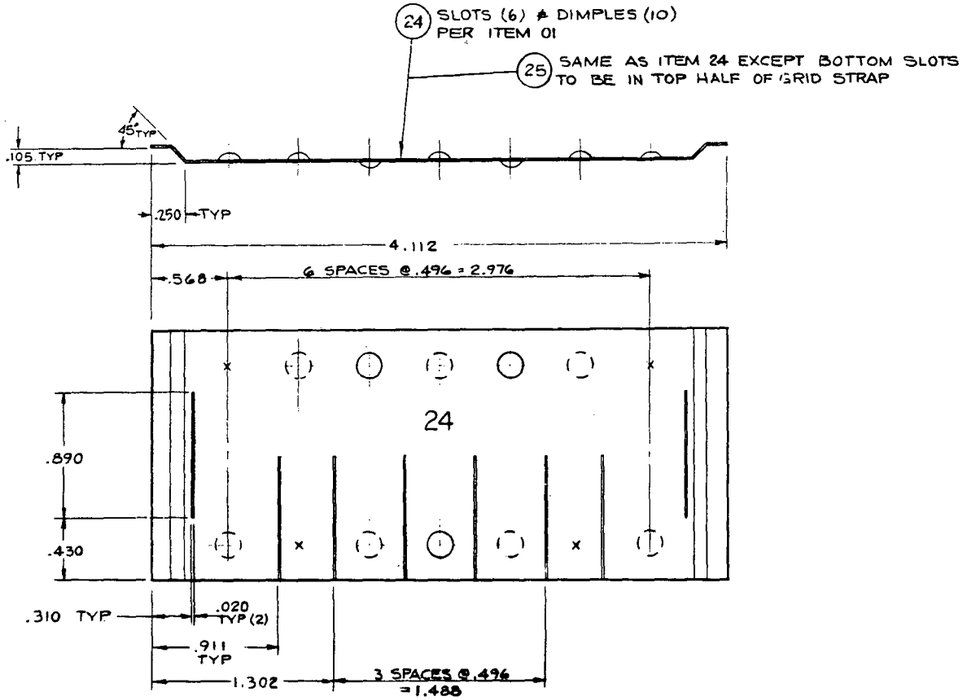

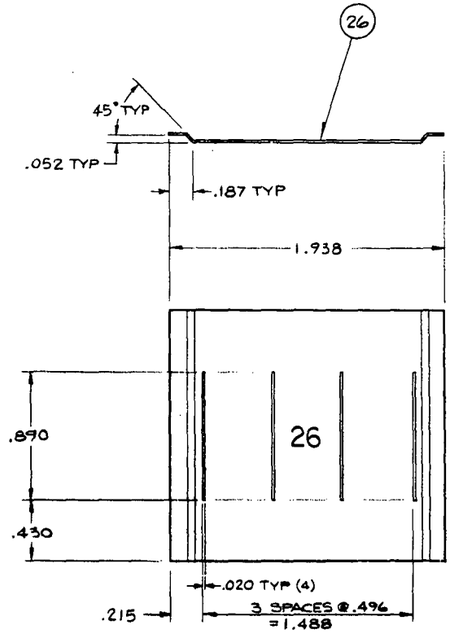

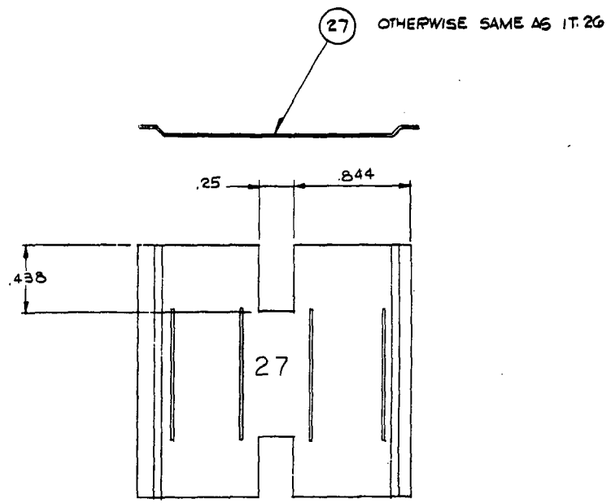

Figure E-7. FLECHT SEASET Natural Circulation Bundle Grid Details (sheet 7 of 7)

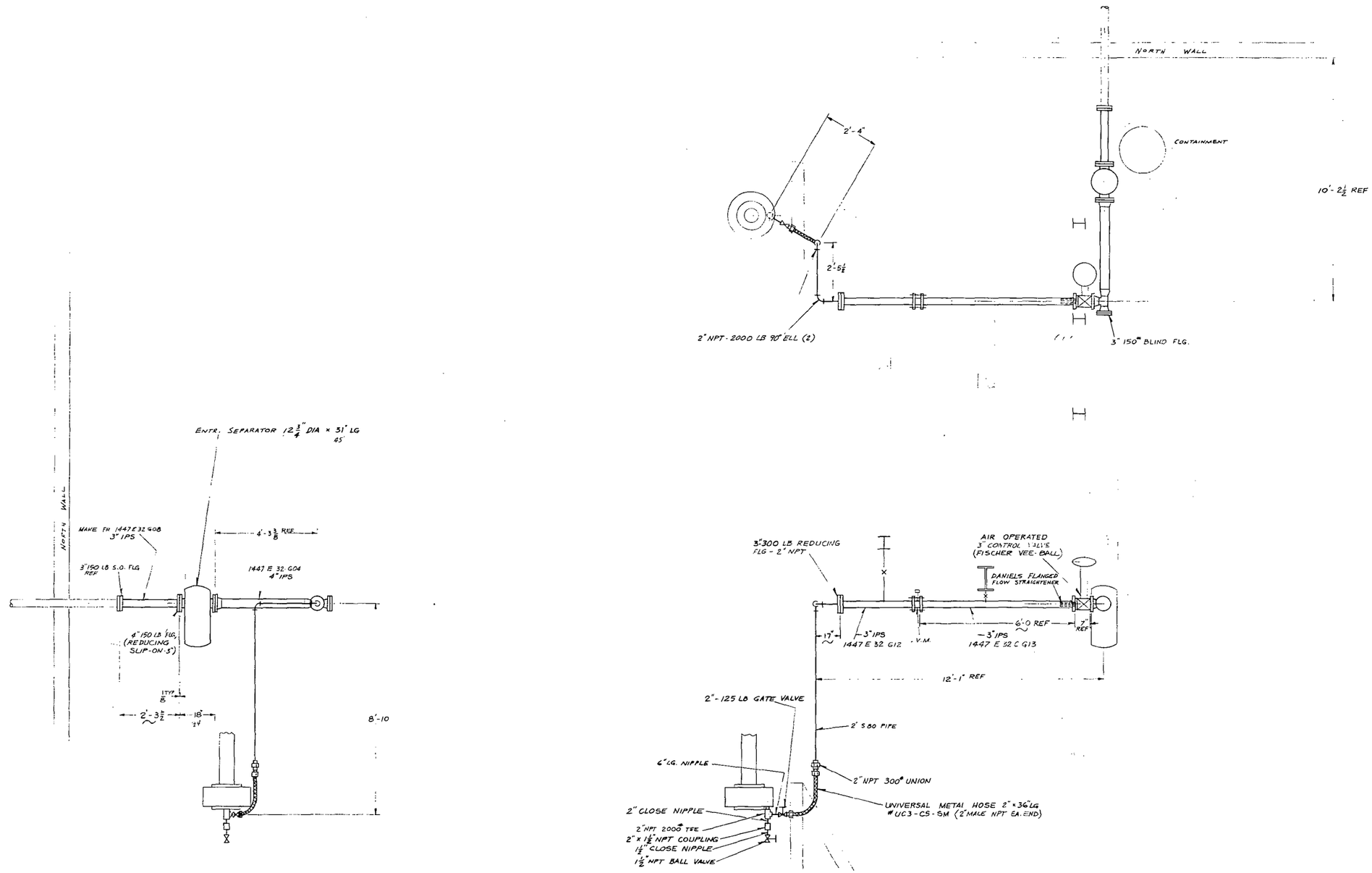

Figure E-8. FLECHT SEASET Natural Circulation Steam Supply Layout

20616-39

BILL OF MATERIAL								
ITEM		PART NAME	PART NO.	MATERIAL	REQ. PER GROUP			
					01	02	03	04
01		SEAL PLATE		ASTM 240 TYPE 304	1			

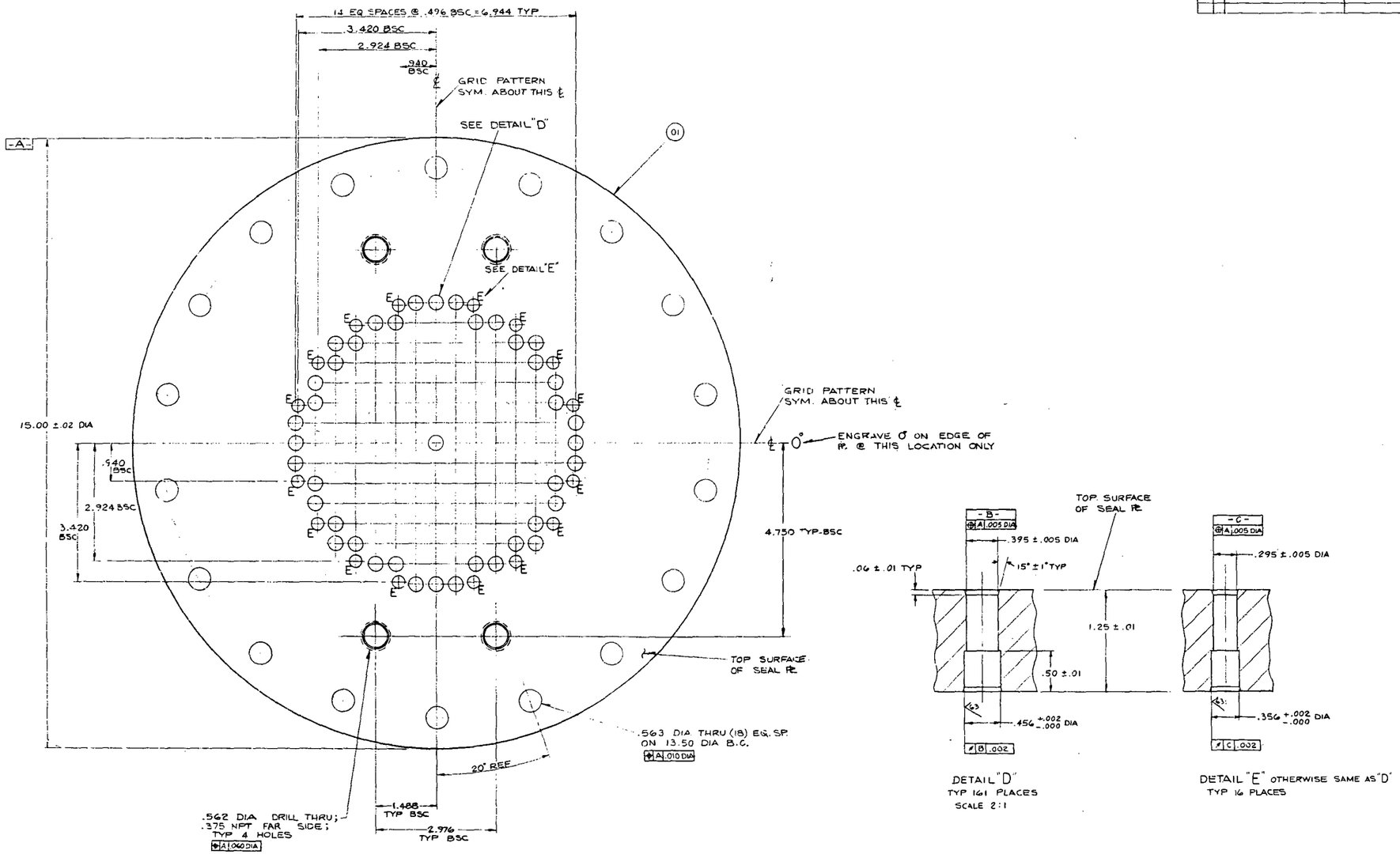

Figure E-9. FLECHT SEASET Natural Circulation Low Mass Housing Lower Seal Plate

BILL OF MATERIAL								
ITEM	NOTE	PART NAME	DRAWING & GR OR IT.	MATERIAL	REQ. PER GROUP			
					01	02	03	04
01		TERMINAL		NICKEL-200	1			
02		WING		300 SERIES SST	1			

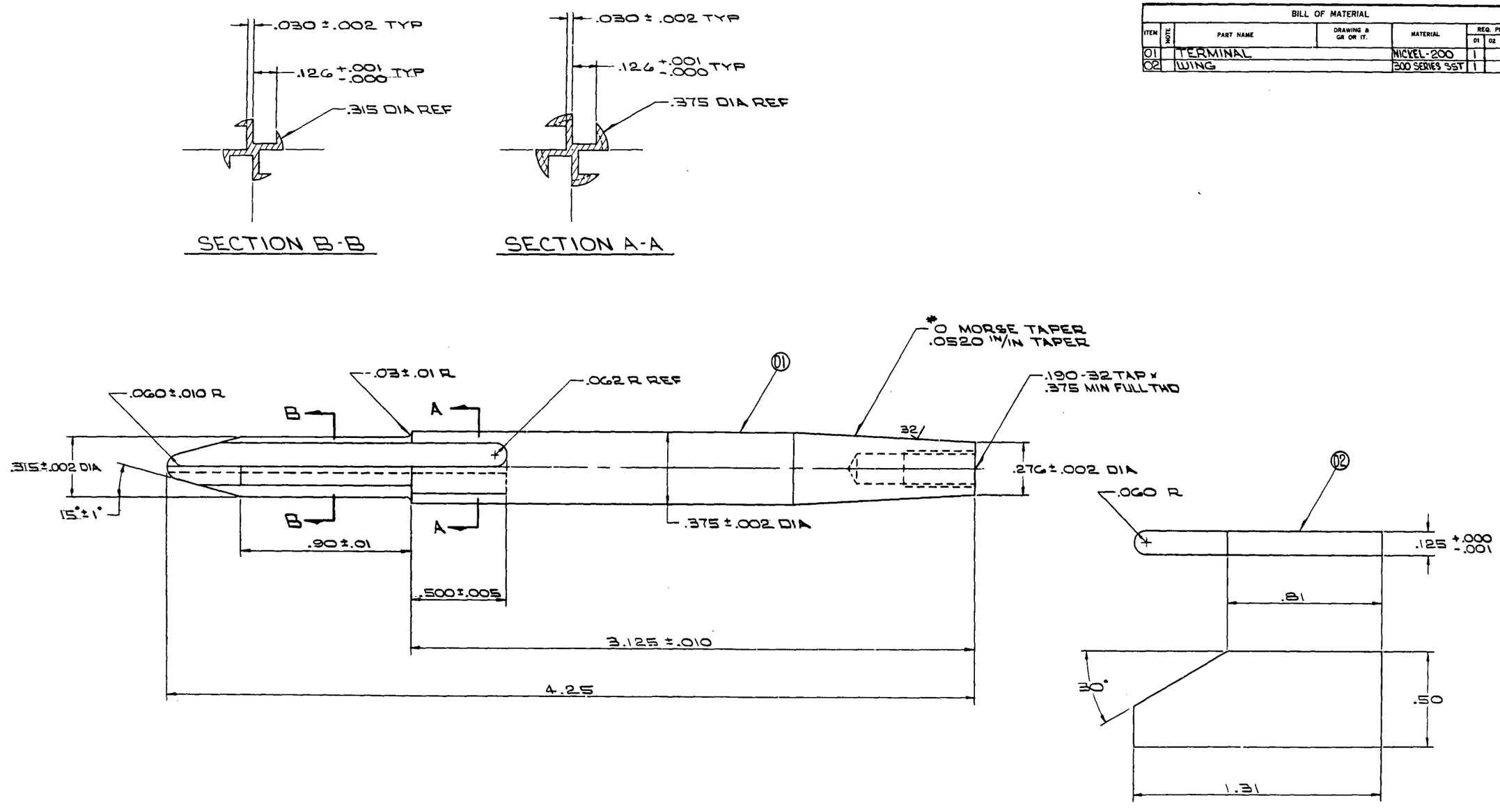

Figure E-10. FLECHT SEASET Natural Circulation Four-Heater-Rod Terminal Assembly (sheet 1 of 2)

BILL OF MATERIAL								
ITEM	NOTE	PART NAME	DRAWING & GR OR IT.	MATERIAL	REQ. PER GROUP			
					01	02	03	04
01		TERMINAL	9550067 H01		1			
02		WING	9550067 H02		4			

NOTES:

1 - NICRO BRAZE 50-S, FURNACE BRAZE IN VACUMN FURNACE @ 1860°F FOR 1 HOUR.

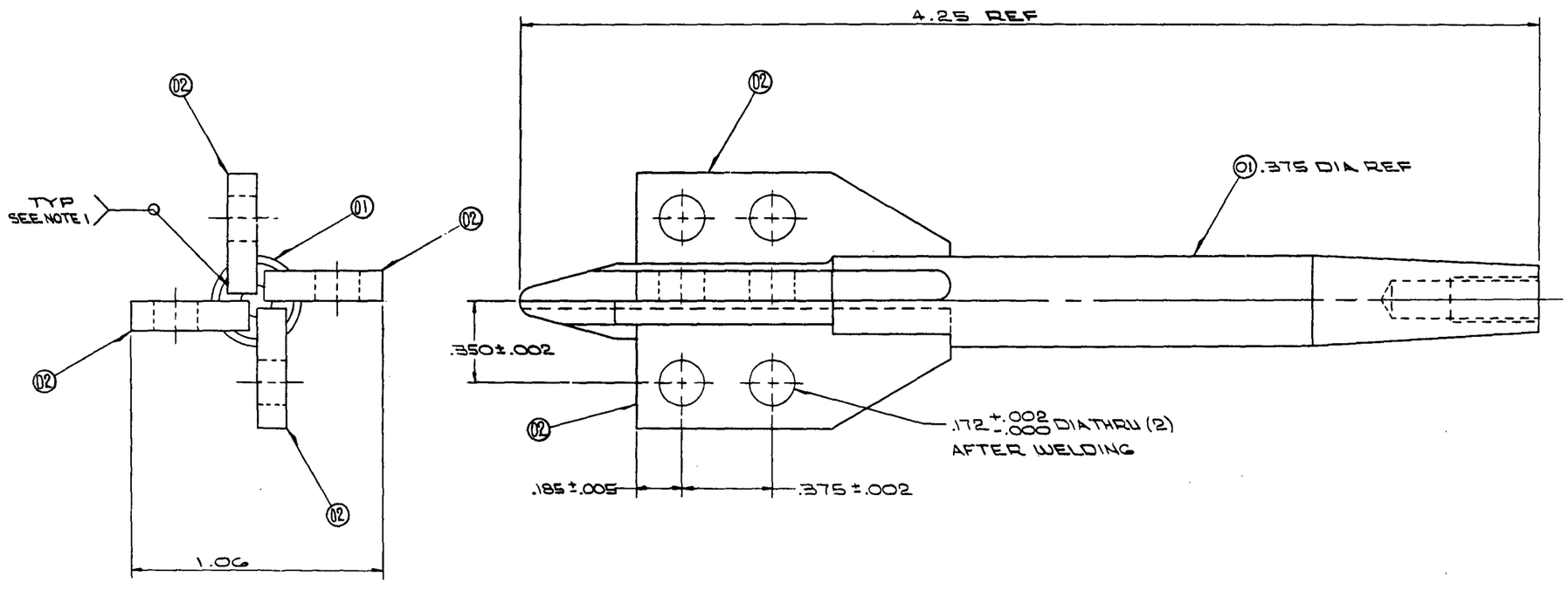

Figure E-10. FLECHT SEASET Natural Circulation Four-Heater-Rod Terminal Assembly (sheet 2 of 2)

BILL OF MATERIAL								
ITEM	NOTE	PART NAME	DRAWING & GR OR IT.	MATERIAL	REQ. PER GROUP			
					01	02	03	04
01		TERMINAL		NICKEL-200	1			

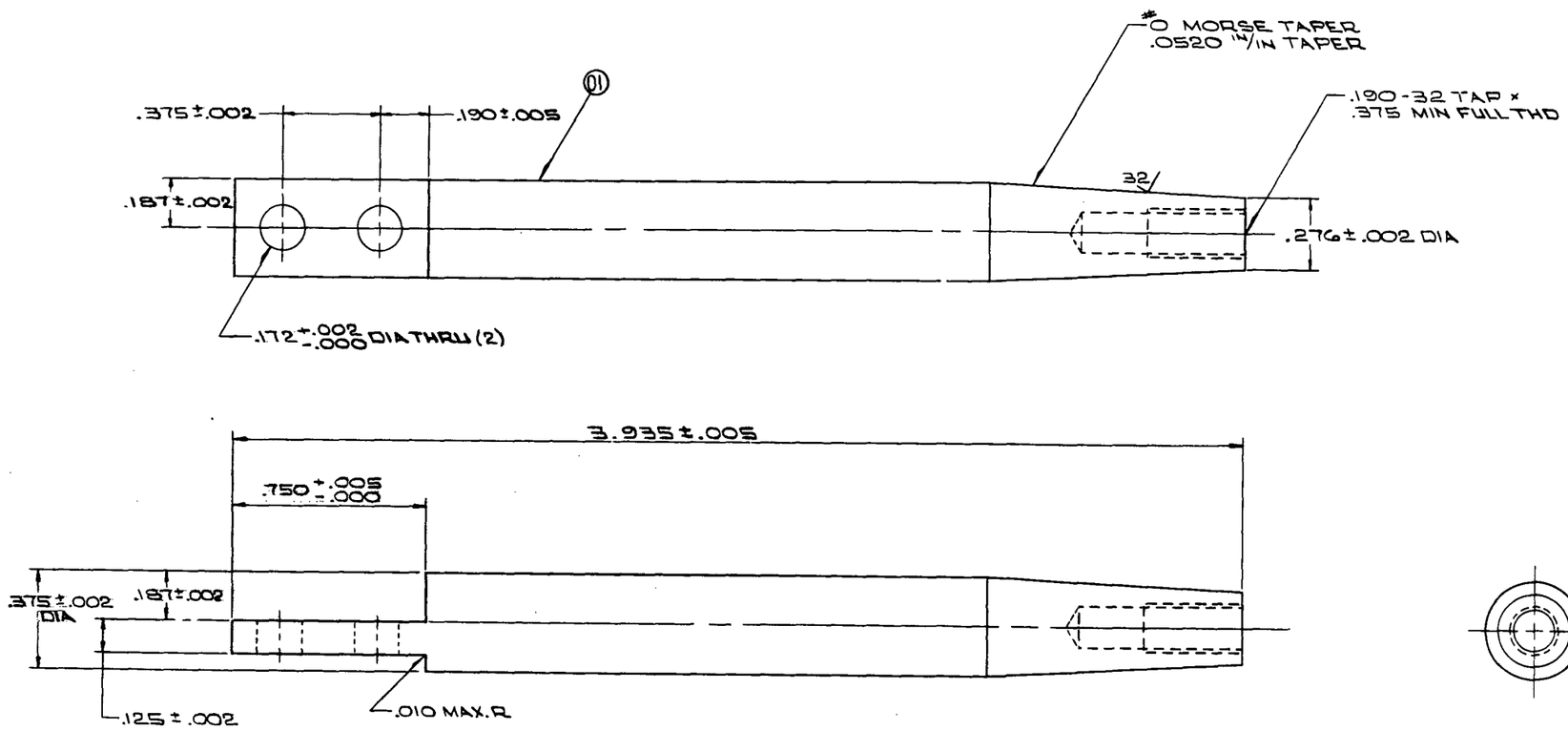

Figure E-11. FLECHT SEASET Natural Circulation Single-Heater-Rod Terminal Assembly

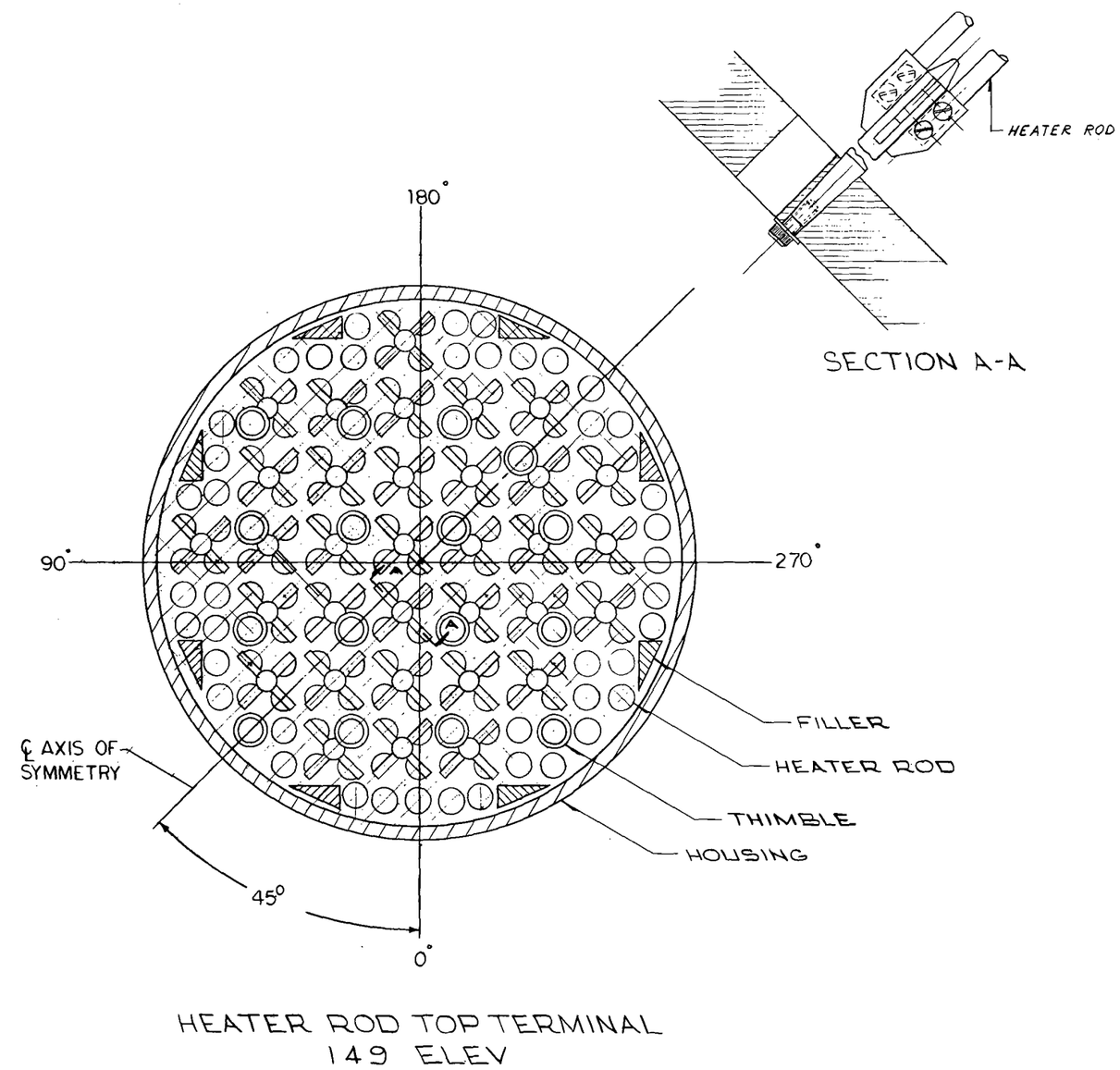

Figure E-12. FLECHT SEASET Natural Circulation Bundle Heater Rod Terminal Cross-Sectional View at 3.78 m (12.42 ft) Elevation

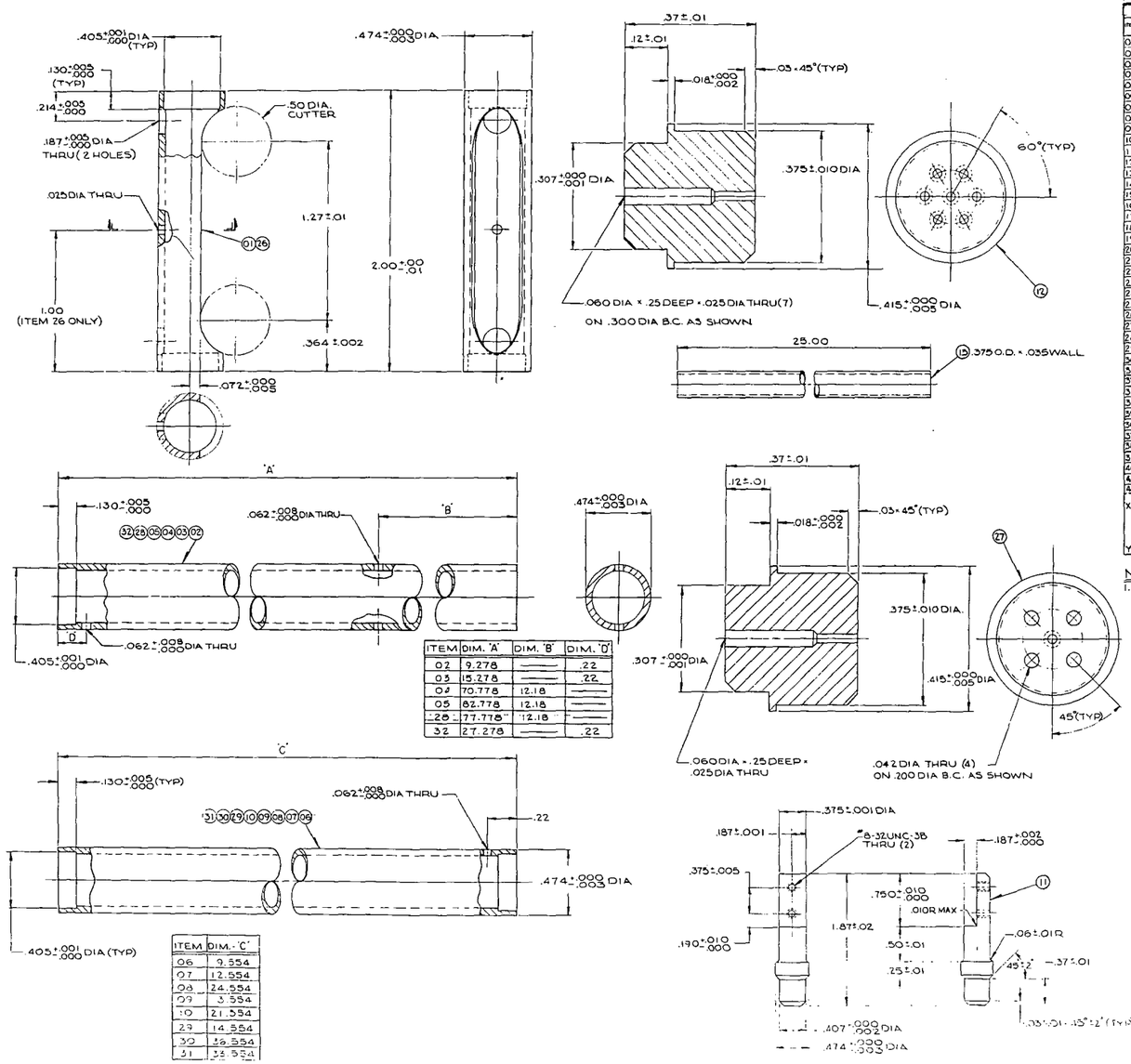

ITEM	DIM. 'A'	DIM. 'B'	DIM. 'D'
02	9.278	—	.22
03	15.278	—	.22
04	70.778	12.18	—
05	82.778	12.18	—
26	77.778	12.18	—
32	27.278	—	.22

ITEM	DIM. 'C'
06	9.554
07	12.554
08	24.554
09	3.554
10	21.554
29	14.554
30	18.554
31	33.554

BILL OF MATERIAL

ITEM	QTY	PART NAME	DRAWING & GR. OR PT.	MATERIAL	NOS. PER GROUP 01	02	03	04	05
01	1	SLEEVE		ASTM A213 TYPE 304	5	5	3	3	3
02	1	TUBE			1	–	–	–	–
03	1	TUBE			–	1	–	–	1
04	1	TUBE			1	–	1	–	–
05	1	TUBE			–	1	1	–	–
06	1	TUBE			3	2	2	1	1
07	1	TUBE			1	–	–	–	–
08	1	TUBE			1	–	–	1	–
09	1	TUBE			–	2	–	–	–
10	1	TUBE			–	1	1	–	–
11		TOP CONNECTOR			1	1	1	1	1
12		BOTTOM PLUG			1	1	–	–	–
13		TUBE			1	1	1	1	1
14		PLUG			1	1	1	1	1
15		PLUG			1	1	1	1	1
16		PLUG			1	1	–	–	–
17		PLUG			1	1	–	–	–
18		PLUG			1	1	–	–	–
19		PLUG			1	1	–	–	–
20		PLUG			1	1	–	–	–
21		PLUG			1	1	–	–	–
22		PLUG			1	1	–	–	–
23		PLUG			1	1	–	–	–
24		PLUG			1	1	–	–	–
25		PLUG			1	1	–	–	–
26	1	SLEEVE			1	1	1	1	1
27		BOTTOM PLUG			–	–	1	1	1
28	1	TUBE			–	–	–	–	1
29	1	TUBE			–	–	–	1	–
30	1	TUBE			–	–	–	1	–
31	1	TUBE			–	–	–	–	1
32	1	TUBE			–	–	1	–	–
33		PLUG			–	–	1	1	1
34		PLUG			–	–	1	1	1
35		PLUG			–	–	1	1	1
36		PLUG			–	–	1	1	1
37		PLUG			–	–	1	1	1
38	–	PLUG		ASTM A213 TYPE 304	–	–	1	1	1
39	X	THERMOCOUPLE			7	7	1	1	1
40	Y	THERMOCOUPLE			–	–	4	4	4
41		COLLAR		ASTM A479 TYPE 304	6	6	3	3	3
42		KEEPER		ASTM A479 TYPE 304	6	6	3	3	3

X - .020 O.D. SST SHEATH, TYPE K, MAGNESIUM OXIDE INSULATION, UNGROUNDED JUNCTION, COLD END STRIPPED & SEALED.

Y - ELECTRICALLY HEATED THERMOCOUPLE.

NOTES:

1. MAKE FROM .50 O.D. x .43 I.D. SST TUBING ASTM A213, TYPE 304, CENTERLESS GRIND O.D. TO .474 +.000 -.003 DIA.

Figure E-13. FLECHT SEASET Natural Circulation Bundle Bare and Heated Thermocouple Steam Probe Details (sheet 1 of 2)

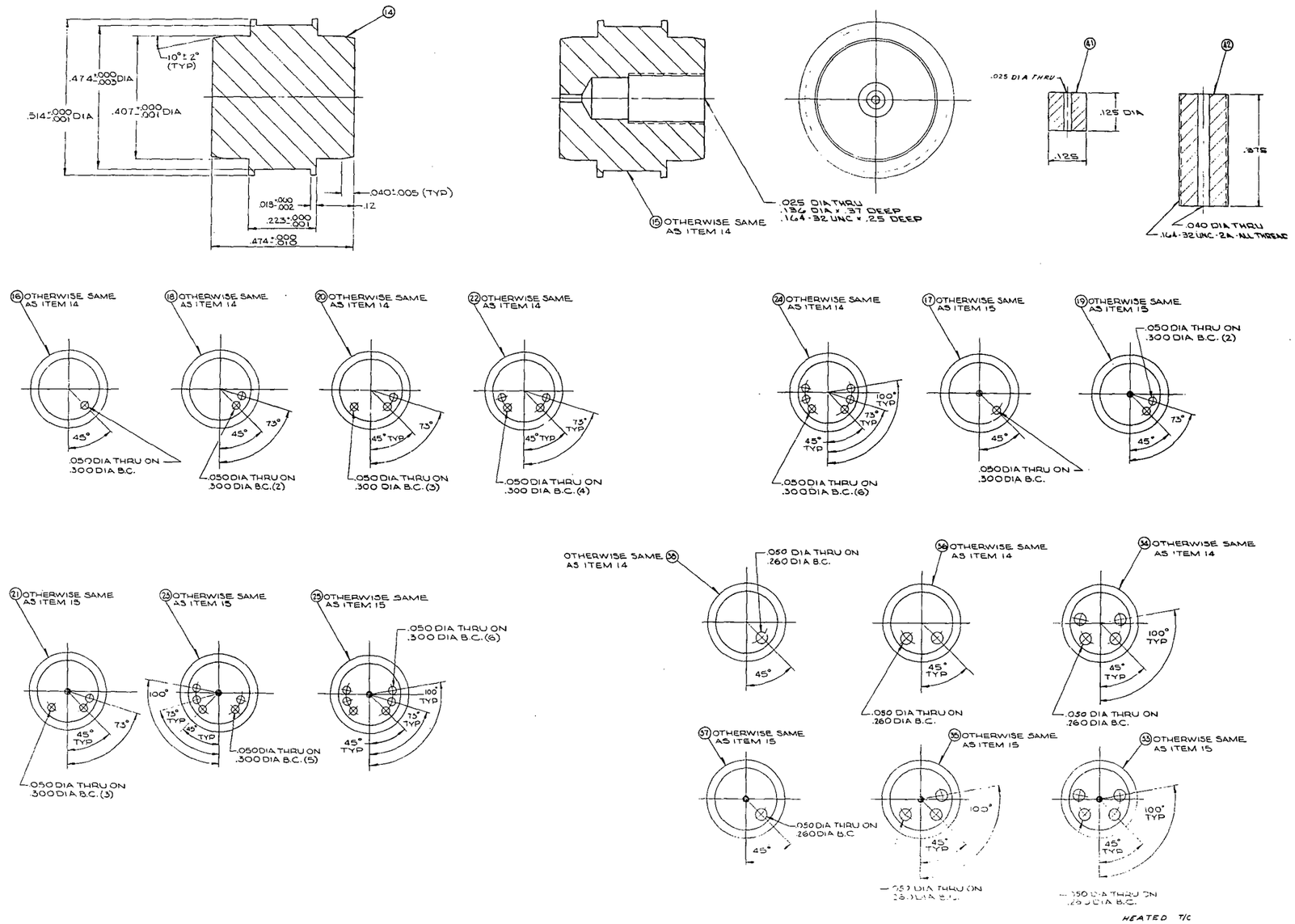

Figure E-13. FLECHT SEASET Natural Circulation Bundle Bare and Heated Thermocouple Steam Probe Details (sheet 2 of 2)

APPENDIX F

INSTRUMENTATION PLAN

This appendix contains the details of the heater rod bundle instrumentation. Figure F-1 shows the heater rod bundle cross section indicating location of instrumentation rod, thimbles instrumented with wall thermocouples, aspirating steam probes, bare thermocouple steam probes, and heated thermocouple steam probes. Figures F-2 through F-16 show the location of bundle instrumentation radially and by elevations, and instruments which are monitored by the CDAS (channel numbers).

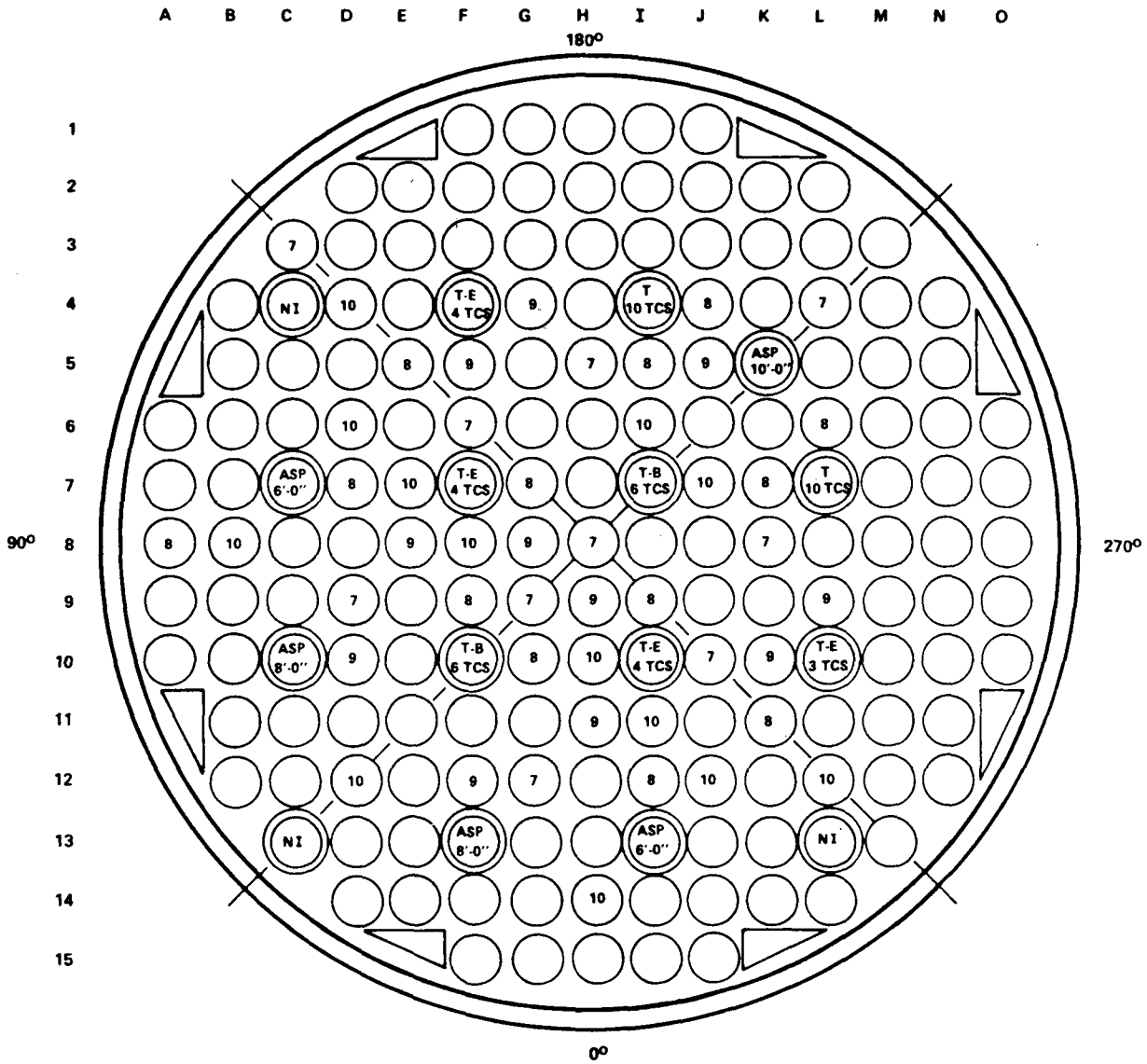

NI = UNINSTRUMENTED
T = INSTRUMENTED THIMBLE
T-B = THIMBLE WITH BARE THERMOCOUPLES
T-E = THIMBLE WITH ELECTRICALLY HEATED THERMOCOUPLES
ASP = ASPIRATED STEAM PROBE

(7) GROUP 7
(8) GROUP 8
(9) GROUP 9
(10) GROUP 10
} INSTRUMENTED HEATER ROD

Figure F-1. FLECHT SEASET Natural Circulation and Reflux Test Rod Bundle Instrumentation

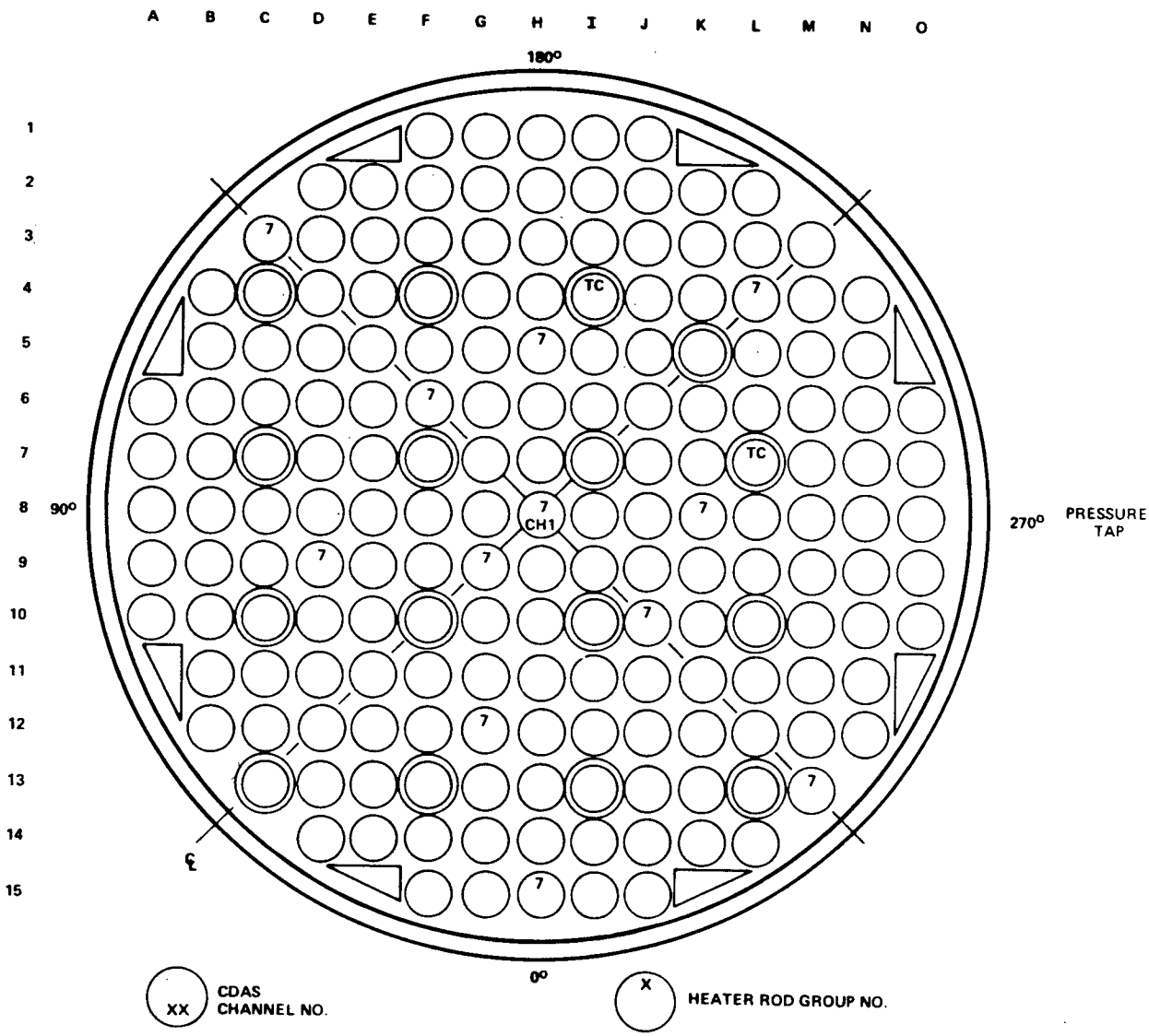

ITEM	CONNECTED	SPARE	TOTAL
HEATER ROD THERMOCOUPLE	1	11	12
STEAM PROBE: ASPIRATING	–	–	–
BARE THERMOCOUPLE	–	–	–
HEATED THERMOCOUPLE	–	–	–
THIMBLE THERMOCOUPLE	–	2	2

Figure F-2. Bundle Instrumentation, 0.30 m (12 in.) Elevation

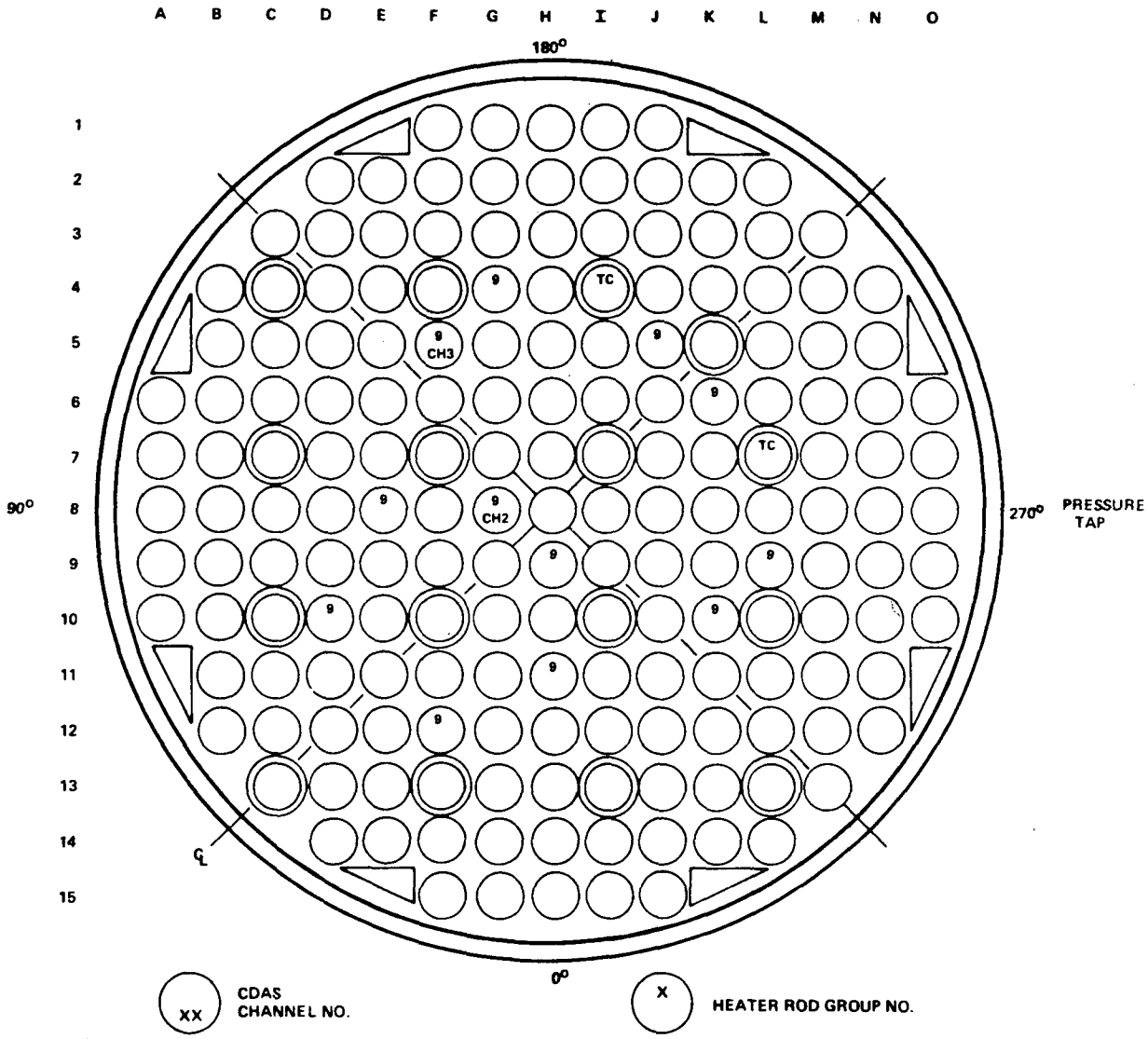

ITEM	CONNECTED	SPARE	TOTAL
HEATER ROD THERMOCOUPLE	2	10	12
STEAM PROBE: ASPIRATING	–	–	–
BARE THERMOCOUPLE	–	–	–
HEATED THERMOCOUPLE	–	–	–
THIMBLE THERMOCOUPLE	–	2	2

Figure F-3. Bundle Instrumentation, 0.61 m (24 in.) Elevation

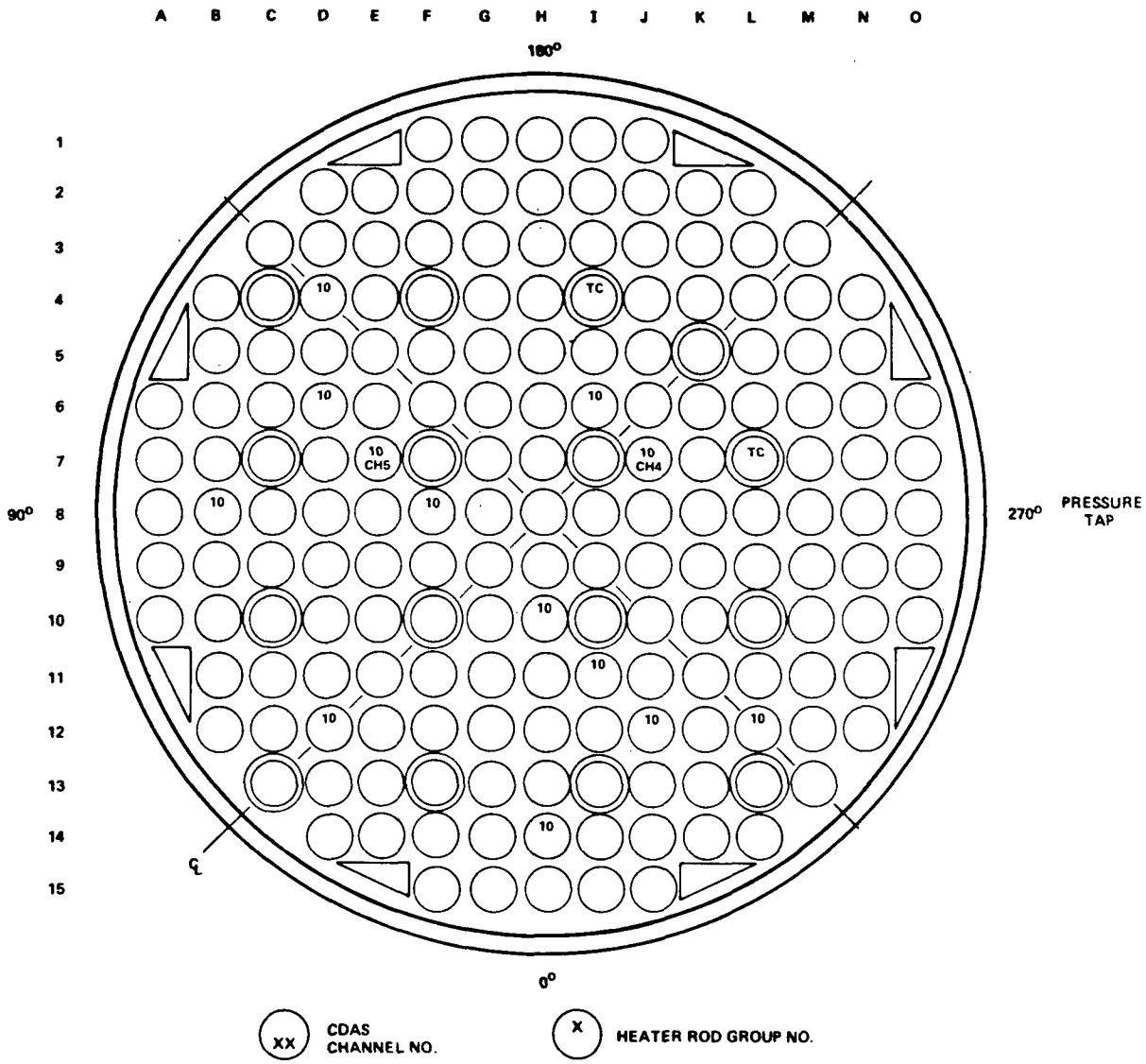

ITEM	CONNECTED	SPARE	TOTAL
HEATER ROD THERMOCOUPLE	2	11	13
STEAM PROBE: ASPIRATING	–	–	–
BARE THERMOCOUPLE	–	–	–
HEATED THERMOCOUPLE	–	–	–
THIMBLE THERMOCOUPLE	–	2	2

Figure F-4. Bundle Instrumentation, 0.99 m (39 in.) Elevation

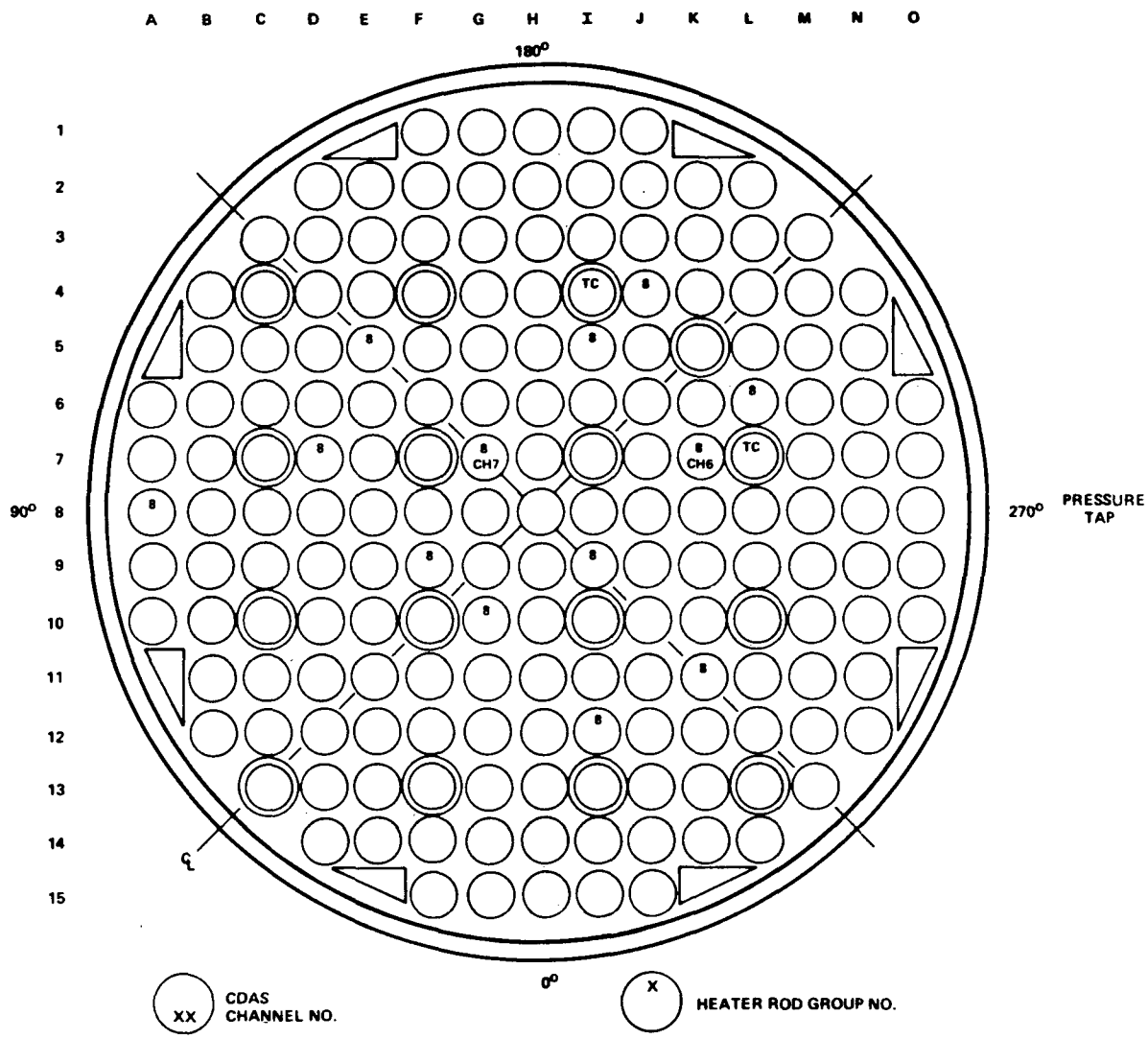

ITEM	CONNECTED	SPARE	TOTAL
HEATER ROD THERMOCOUPLE	2	11	13
STEAM PROBE: ASPIRATING	–	–	–
BARE THERMOCOUPLE	–	–	–
HEATED THERMOCOUPLE	–	–	–
THIMBLE THERMOCOUPLE	–	2	2

Figure F-5. Bundle Instrumentation, 1.22 m (48 in.) Elevation

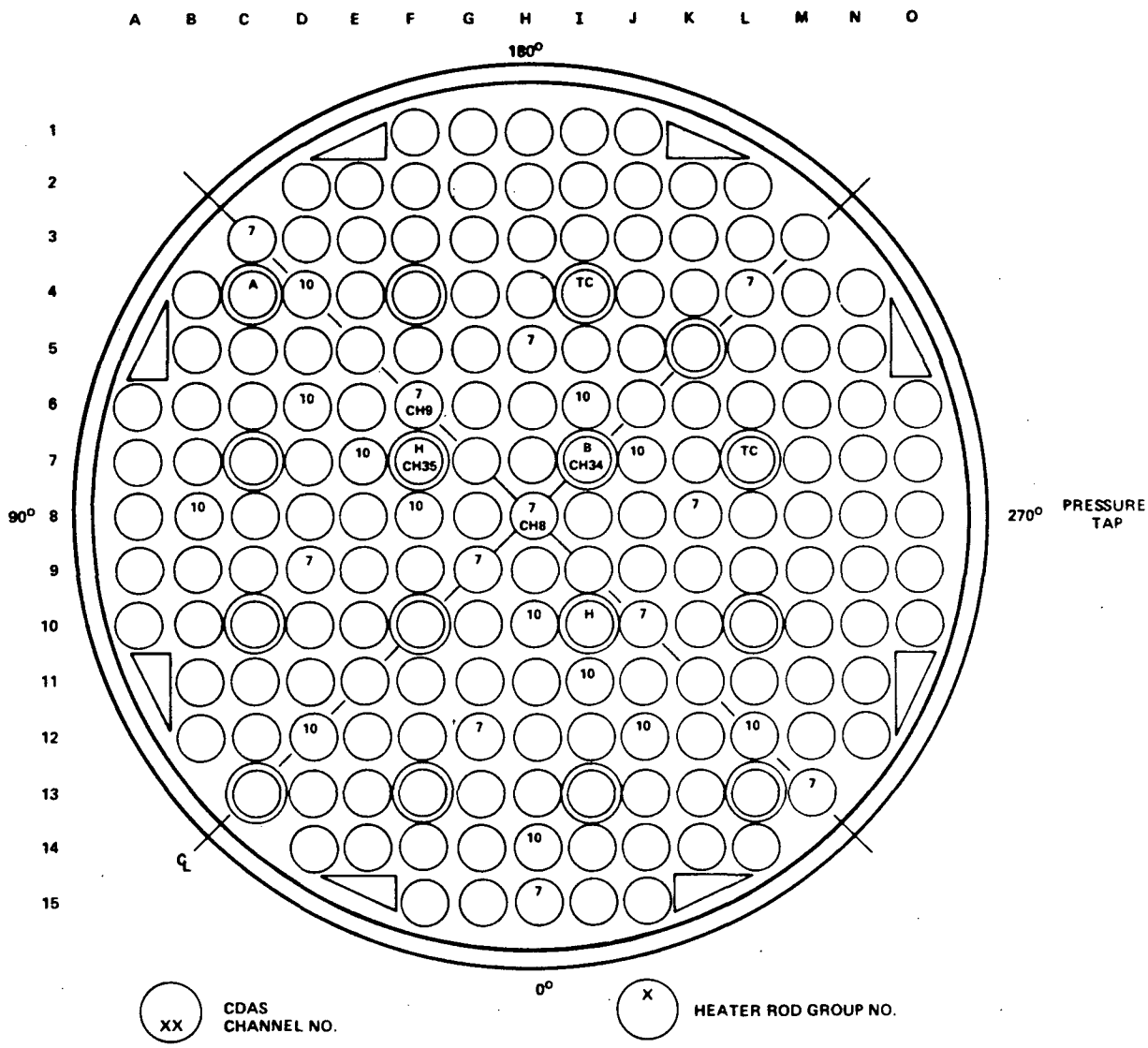

ITEM	CONNECTED	SPARE	TOTAL
HEATER ROD THERMOCOUPLE	3	21	24
STEAM PROBE: ASPIRATING	–	1	1
BARE THERMOCOUPLE	1	–	1
HEATED THERMOCOUPLE	–	1	1
THIMBLE THERMOCOUPLE	–	2	2

Figure F-6. Bundle Instrumentation, 1.52 m (60 in.) Elevation

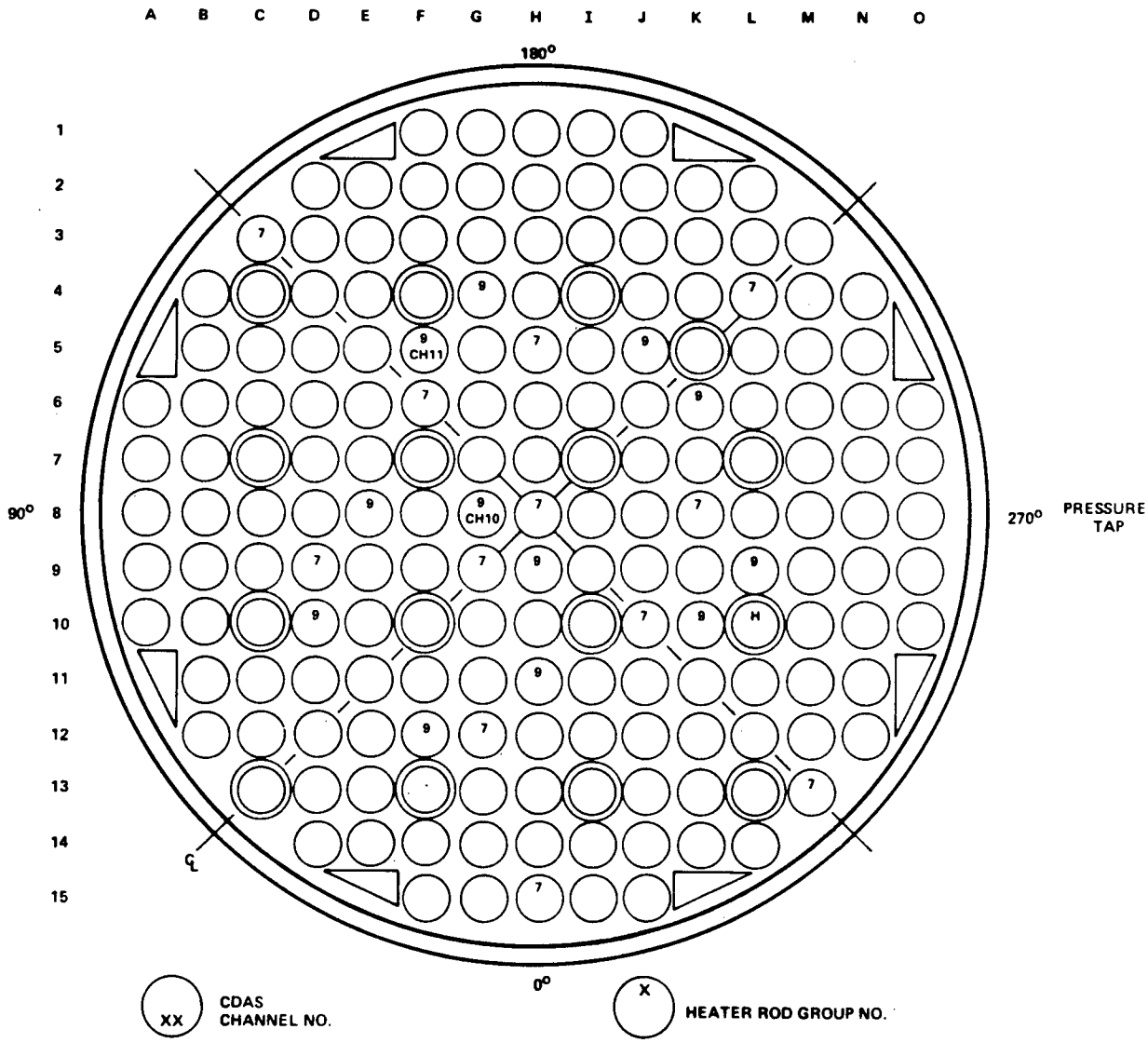

ITEM	CONNECTED	SPARE	TOTAL
HEATER ROD THERMOCOUPLE	2	22	24
STEAM PROBE: ASPIRATING	–	–	–
BARE THERMOCOUPLE	–	–	–
HEATED THERMOCOUPLE	–	1	1
THIMBLE THERMOCOUPLE	–	–	–

Figure F-7. Bundle Instrumentation, 1.70 m (67 in.) Elevation

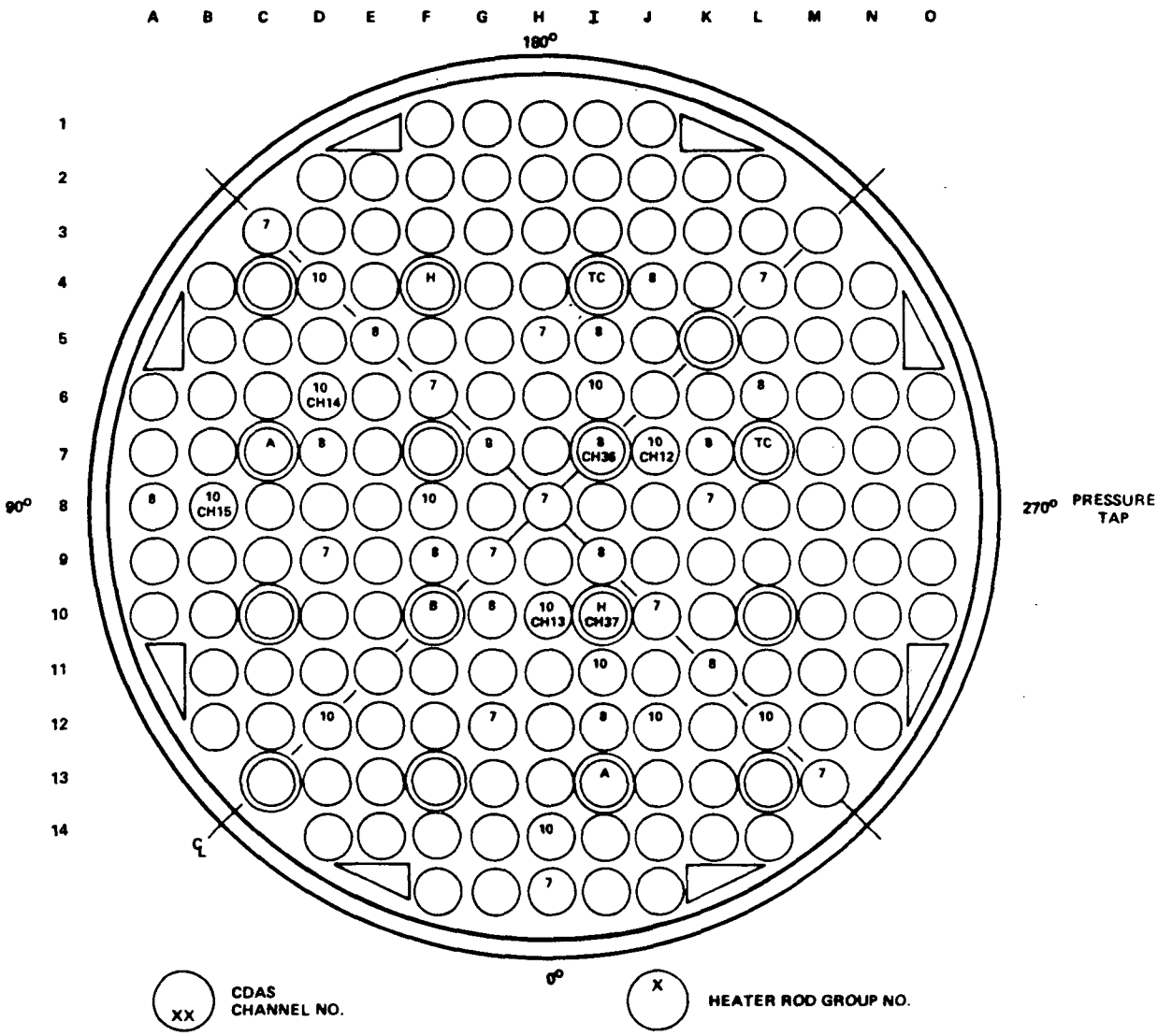

ITEM	CONNECTED	SPARE	TOTAL
HEATER ROD THERMOCOUPLE	4	33	38
STEAM PROBE: ASPIRATING	–	2	2
BARE THERMOCOUPLE	1	1	2
HEATED THERMOCOUPLE	–	2	2
THIMBLE THERMOCOUPLE	–	2	2

Figure F-8. Bundle Instrumentation, 1.83 m (72 in.) Elevation

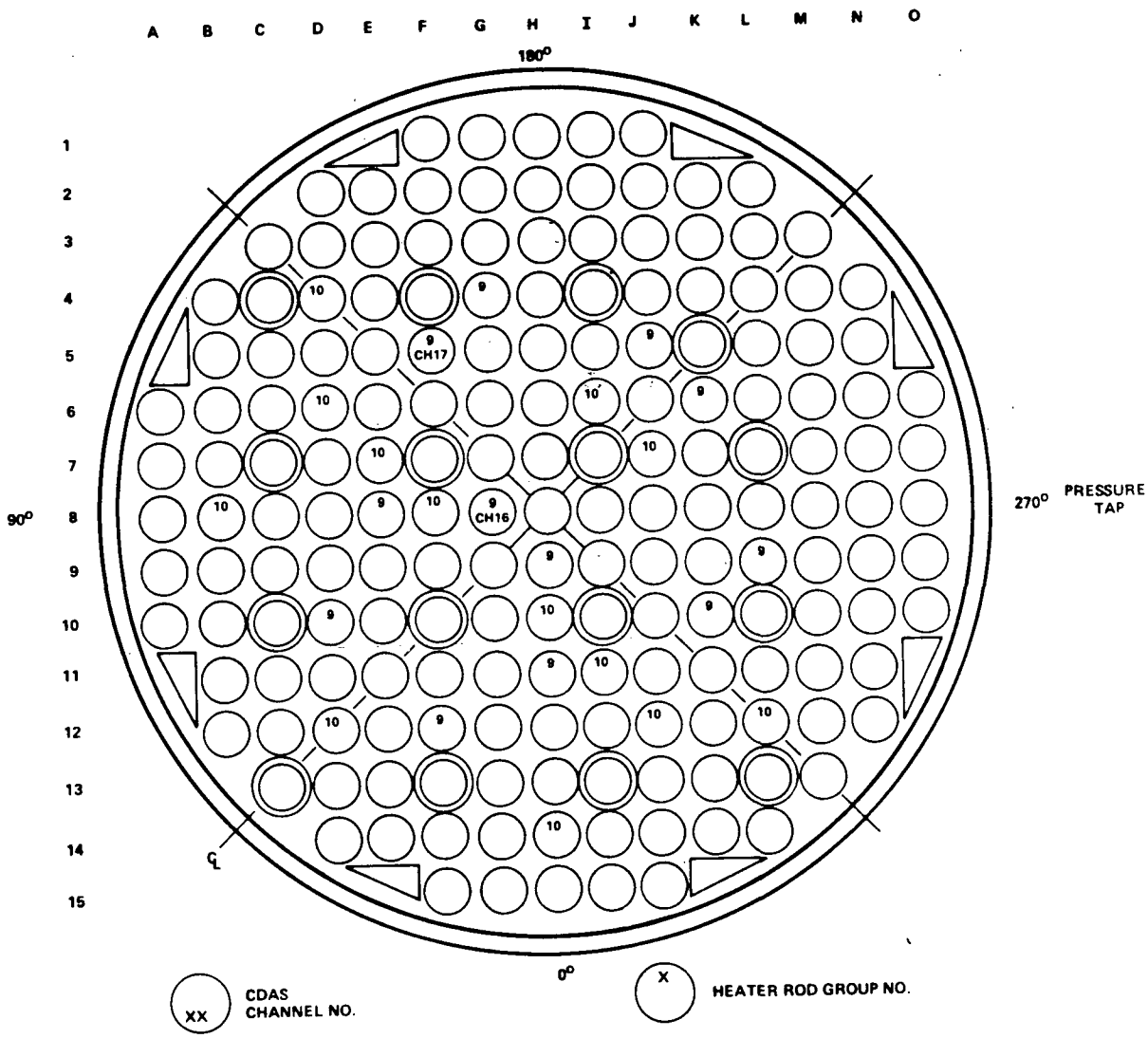

ITEM	CONNECTED	SPARE	TOTAL
HEATER ROD THERMOCOUPLE	2	23	25
STEAM PROBE: ASPIRATING	–	–	–
BARE THERMOCOUPLE	–	–	–
HEATED THERMOCOUPLE	–	–	–
THIMBLE THERMOCOUPLE	–	–	–

Figure F-9. Bundle Instrumentation, 1.98 m (78 in.) Elevation

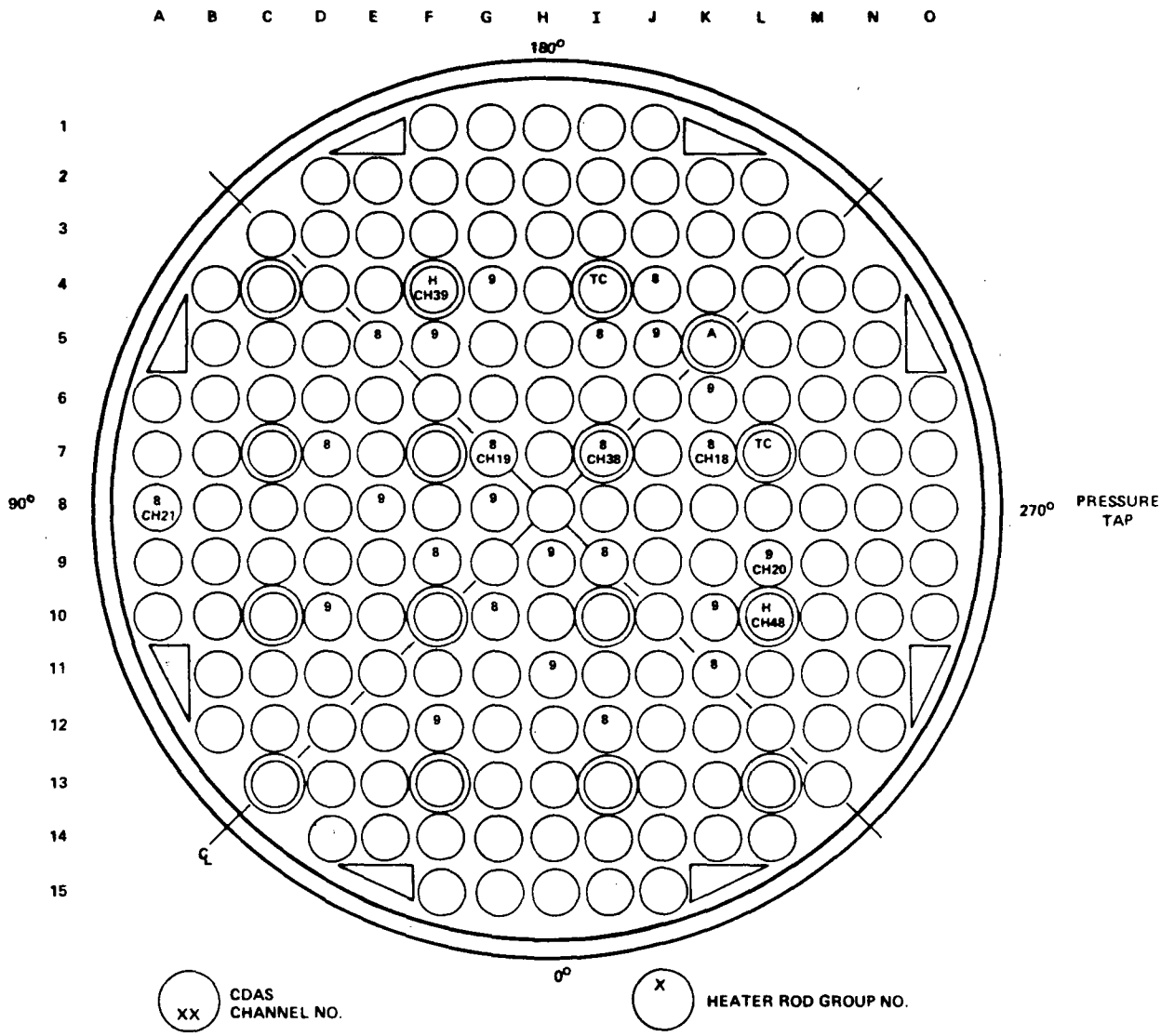

ITEM	CONNECTED	SPARE	TOTAL
HEATER ROD THERMOCOUPLE	4	21	24
STEAM PROBE: ASPIRATING	–	1	1
BARE THERMOCOUPLE	1	–	1
HEATED THERMOCOUPLE	2	–	2
THIMBLE THERMOCOUPLE	–	2	2

Figure F-10. Bundle Instrumentation, 2.13 m (84 in.) Elevation

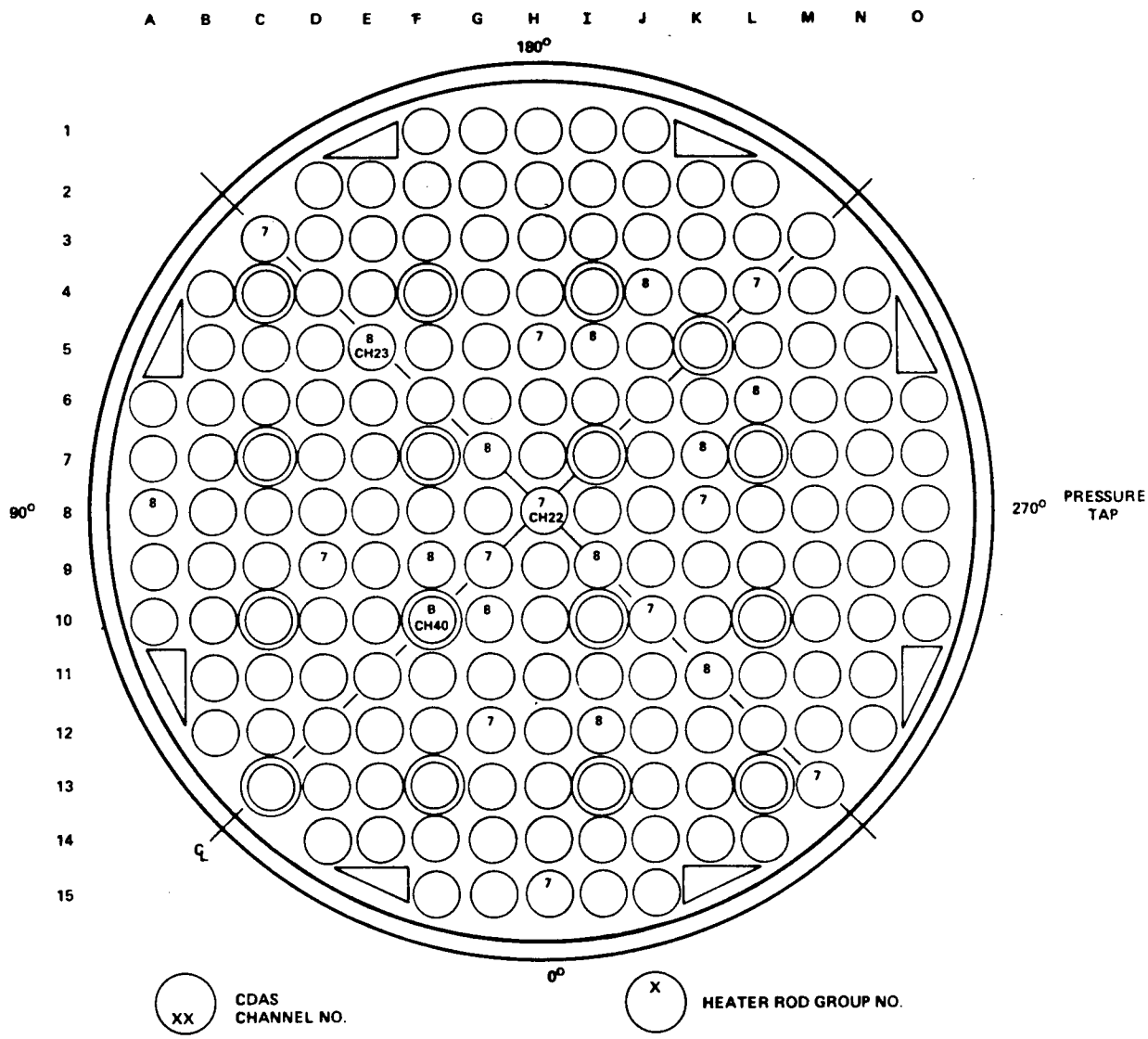

ITEM	CONNECTED	SPARE	TOTAL
HEATER ROD THERMOCOUPLE	2	21	23
STEAM PROBE: ASPIRATING	–	–	–
BARE THERMOCOUPLE	1	–	1
HEATED THERMOCOUPLE	–	–	–
THIMBLE THERMOCOUPLE	–	–	–

Figure F-11. Bundle Instrumentation, 2.29 m (90 in.) Elevation

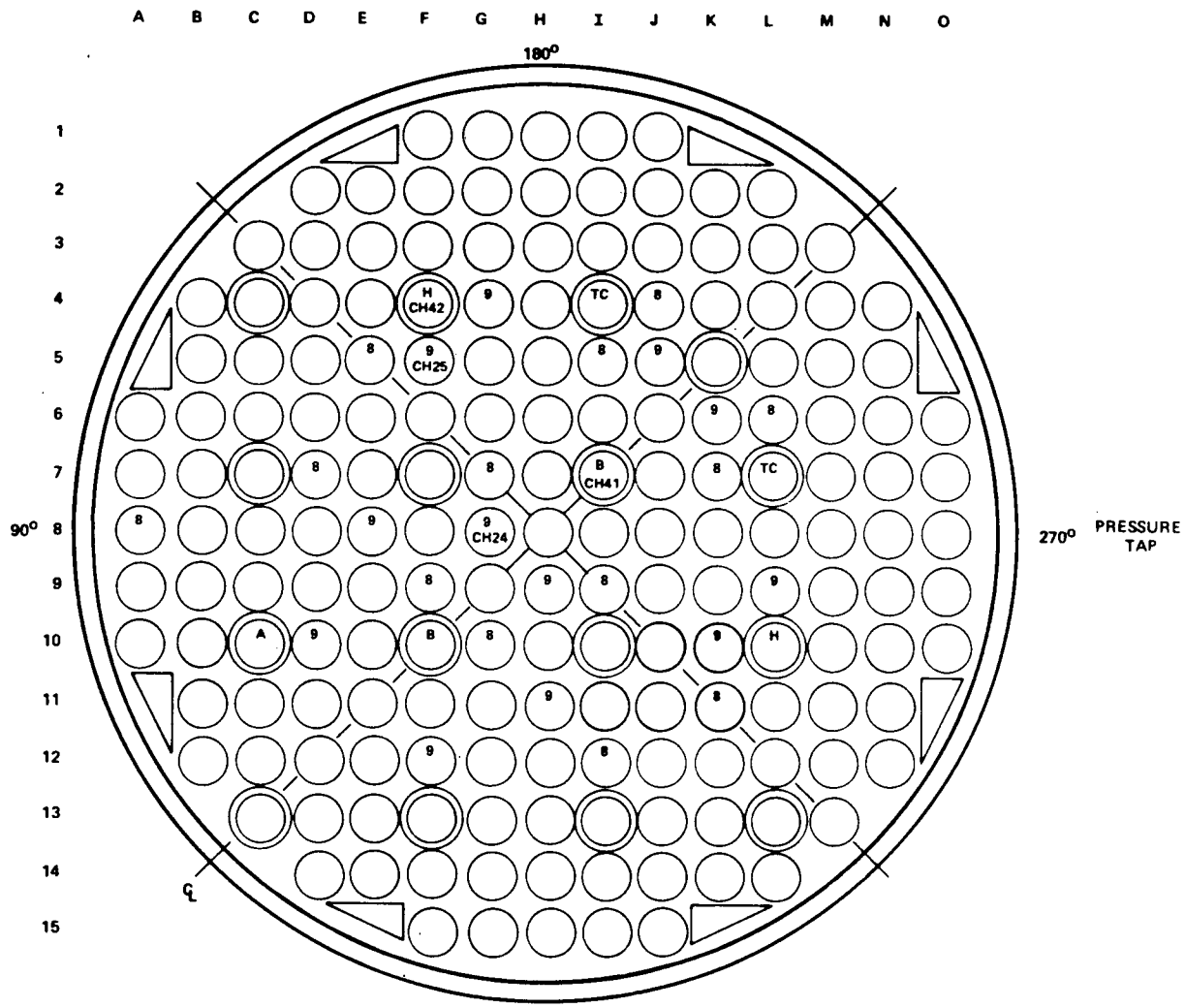

ITEM	CONNECTED	SPARE	TOTAL
HEATER ROD THERMOCOUPLE	2	23	25
STEAM PROBE: ASPIRATING	–	1	1
BARE THERMOCOUPLE	1	1	2
HEATED THERMOCOUPLE	1	1	2
THIMBLE THERMOCOUPLE	–	2	2

Figure F-12. Bundle Instrumentation, 2.44 m (96 in.) Elevation

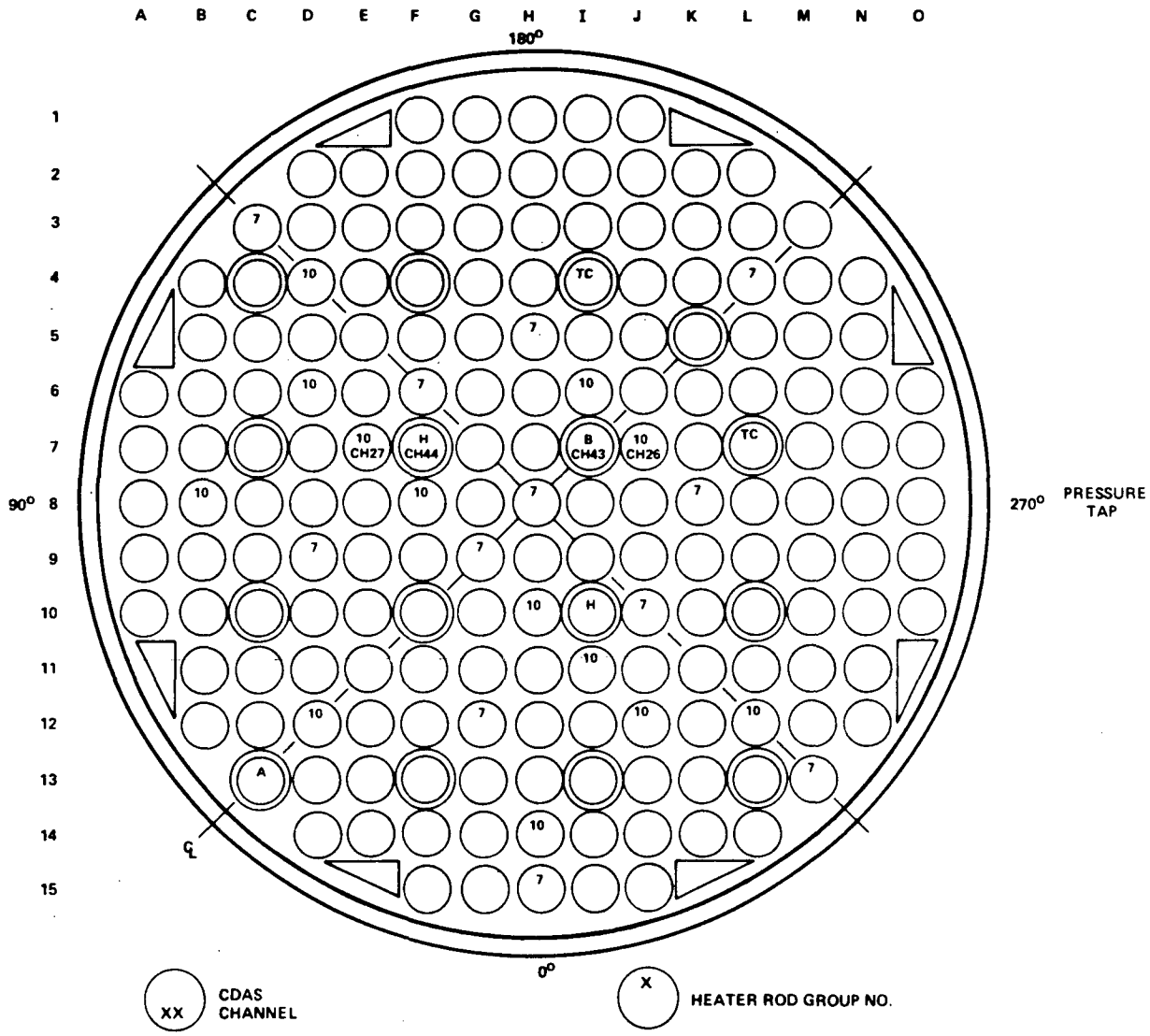

ITEM	CONNECTED	SPARE	TOTAL
HEATER ROD THERMOCOUPLE	2	23	25
STEAM PROBE: ASPIRATING	–	1	1
BARE THERMOCOUPLE	1	–	1
HEATED THERMOCOUPLE	1	1	2
THIMBLE THERMOCOUPLE	–	2	2

Figure F-13. Bundle Instrumentation, 2.82 m (111 in.) Elevation

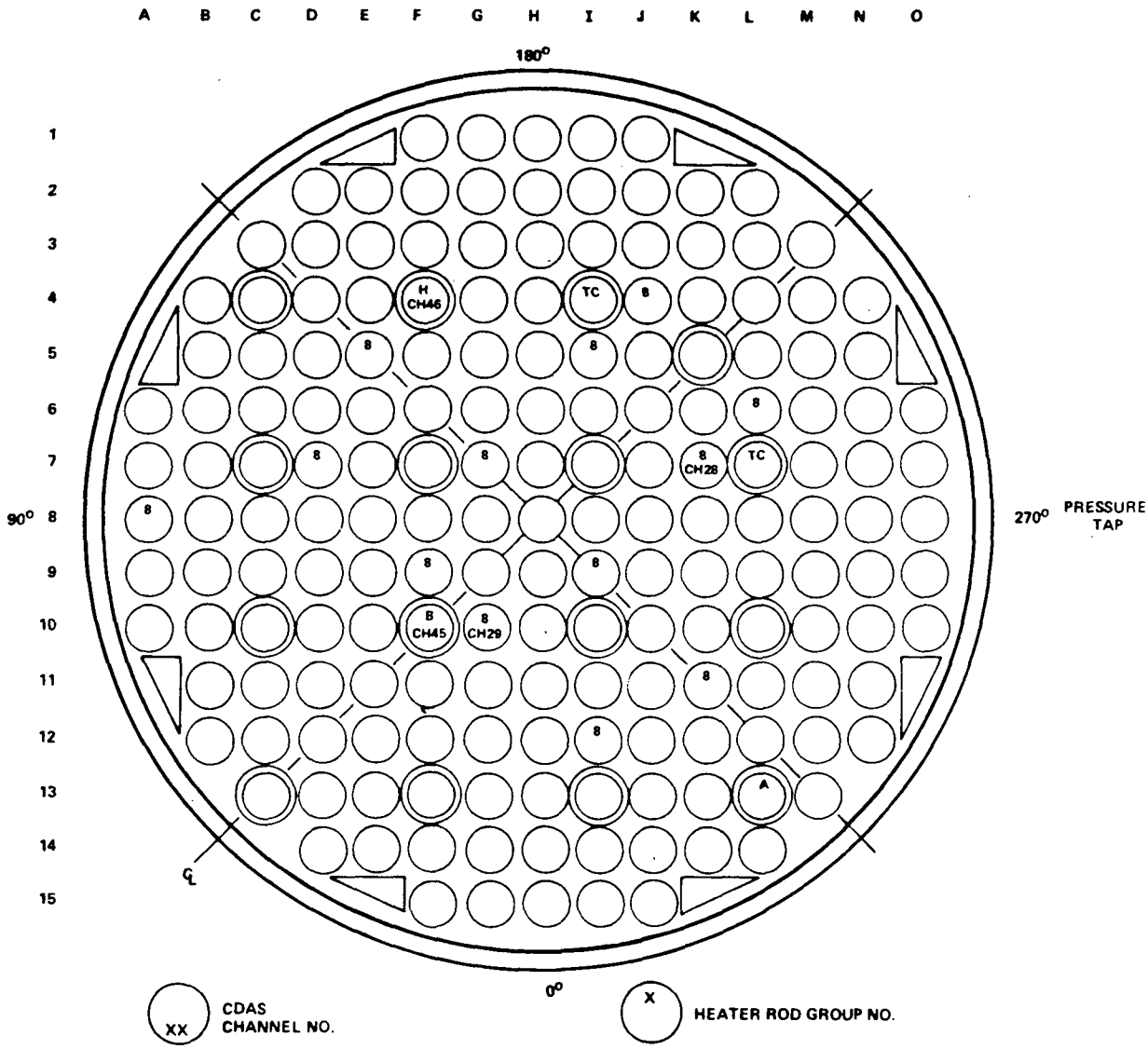

ITEM	CONNECTED	SPARE	TOTAL
HEATER ROD THERMOCOUPLE	2	11	13
STEAM PROBE: ASPIRATING	–	1	1
BARE THERMOCOUPLE	1	–	1
HEATED THERMOCOUPLE	1	–	1
THIMBLE THERMOCOUPLE	–	2	2

Figure F-14. Bundle Instrumentation, 3.05 m (120 in.) Elevation

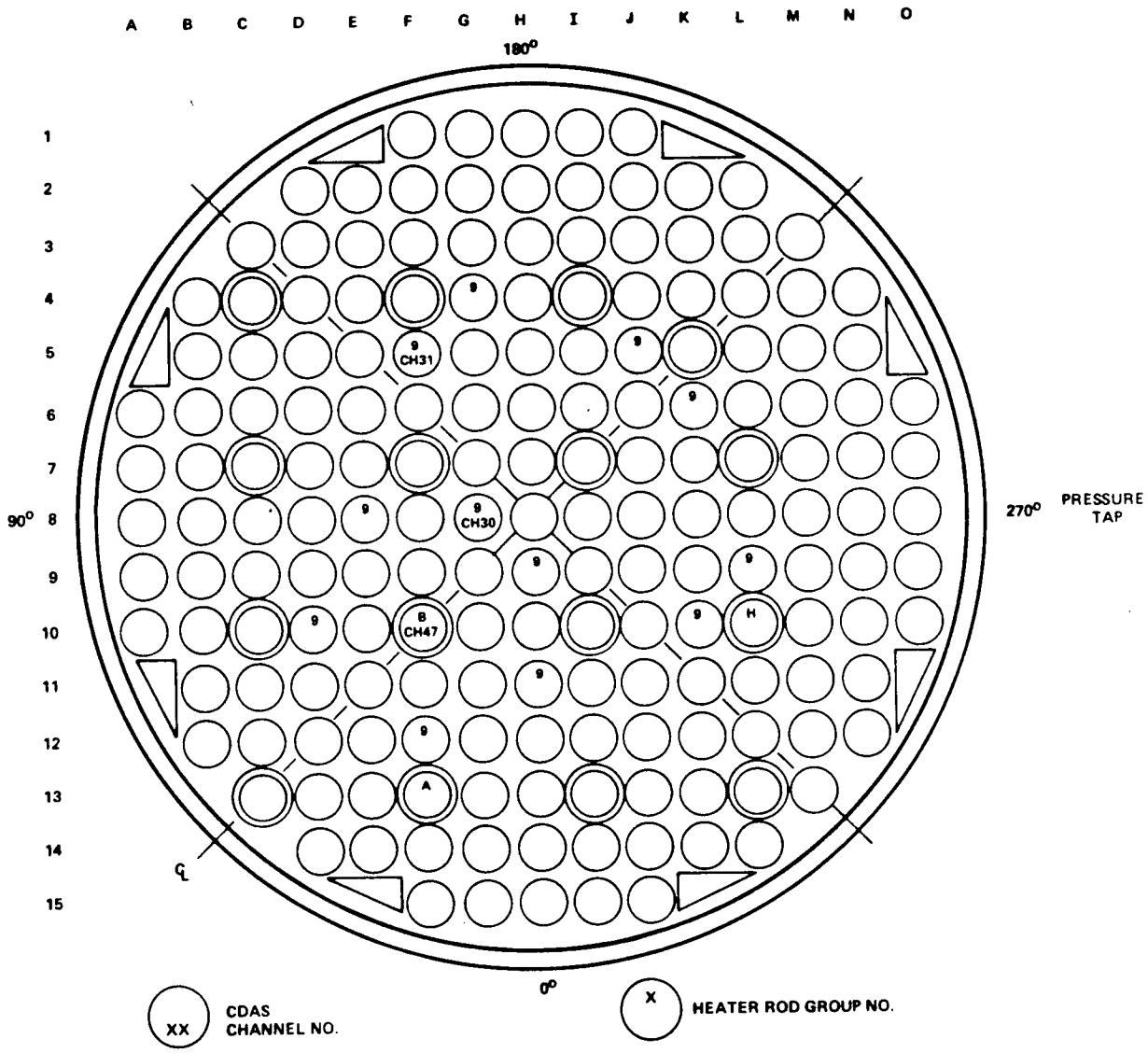

ITEM	CONNECTED	SPARE	TOTAL
HEATER ROD THERMOCOUPLE	2	10	12
STEAM PROBE: ASPIRATING	–	1	1
BARE THERMOCOUPLE	1	–	1
HEATED THERMOCOUPLE	–	1	1
THIMBLE THERMOCOUPLE	–	–	–

Figure F-15. Bundle Instrumentation, 3.35 m (132 in.) Elevation

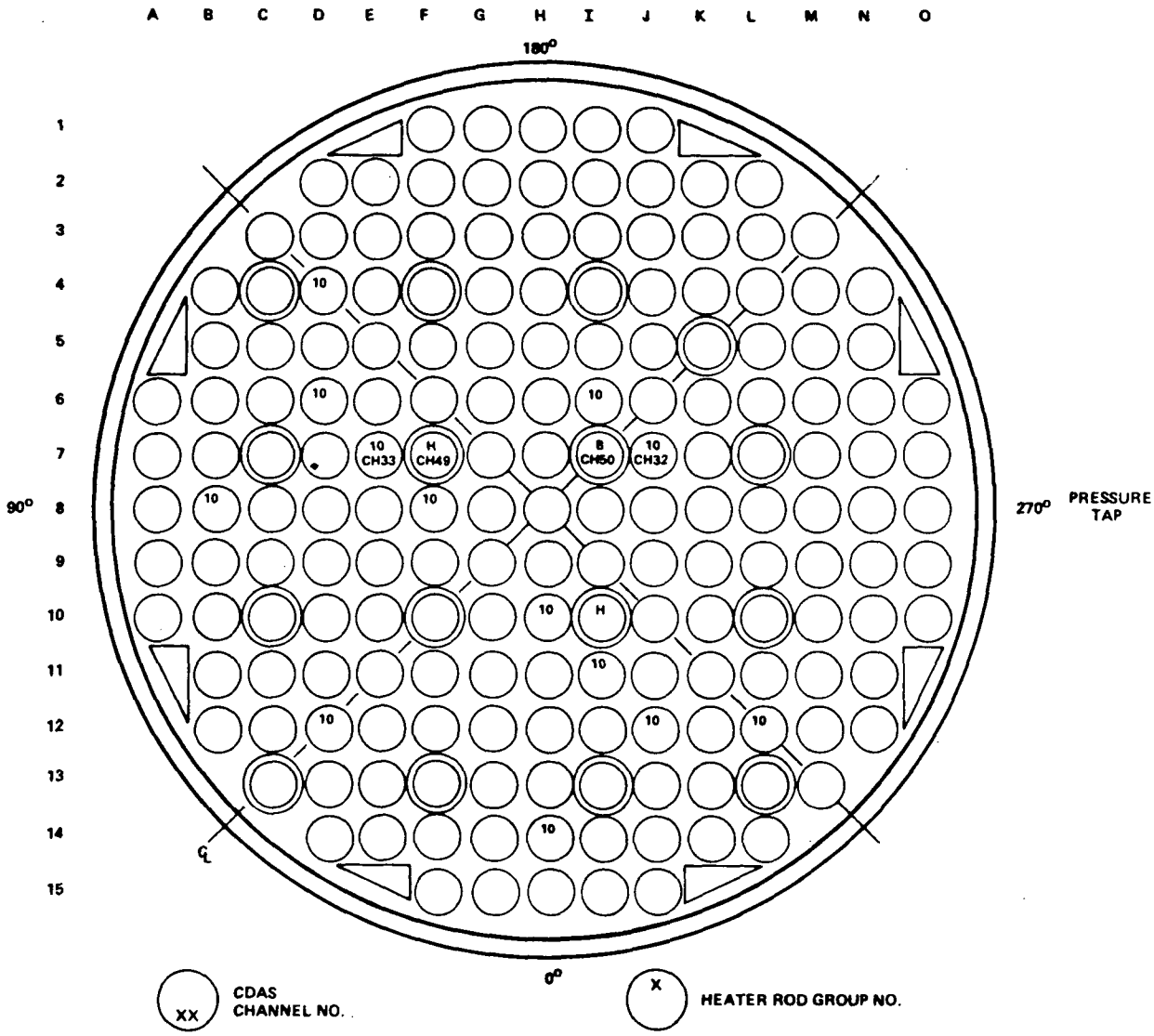

ITEM	CONNECTED	SPARE	TOTAL
HEATER ROD THERMOCOUPLE	2	11	13
STEAM PROBE: ASPIRATING	–	–	–
BARE THERMOCOUPLE	1	–	1
HEATED THERMOCOUPLE	1	1	2
THIMBLE THERMOCOUPLE	–	–	–

Figure F-16. Bundle Instrumentation, 3.51 m (138 in.) Elevation

APPENDIX G

NATURAL CIRCULATION AND REFLUX CONDENSATION TEST RUN SPECIFICATION AND VALIDATION SHEET

Reproduced on the following pages is the run specification and validation sheet which specifies conditions and requirements for a valid test. This sheet also provides space for comments on run conditions, causes for terminating and invalidating a run, and instrumentation failures.

FLECHT SEASET NATURAL CIRCULATION AND REFLUX
CONDENSATION TEST RUN SPECIFICATION AND VALIDATION SHEET

		Specified Value		Actual Value	
I.	Primary Side				
1.	Lower Plenum Fluid Temperature	_____	$^{o}F \pm 5^{o}F$	_____	^{o}F
2.	U. P. Pressure	_____	psia $\pm$ 0.75 psia	_____	psia
3.	Condition	Liquid Full		Partially Full	
II.	Pressurizer (Accumulator No.)				
1.	Gas Overpressure	_____	psia $\pm$ 0.75 psia	_____	psia
2.	Fluid Temperature	_____	$^{o}F \pm 5^{o}F$	_____	^{o}F
3.	Fluid Level	_____	ft $\pm$ 1%	_____	ft
III.	Bundle Power			Redundant Power	
1.	Initial A Zone Power	_____	kw $\pm$ 1%	_____	kw
2.	Initial B Zone Power	_____	kw $\pm$ 1%	_____	kw
3.	Initial C Zone Power	_____	kw $\pm$ 1%	_____	kw
IV.	Loop Piping and Component Wall Temperatures				
1.	Lower Plenum	_____	$^{o}F \pm 10^{o}F$	_____	^{o}F
2.	Housing	_____	$^{o}F \pm 10^{o}F$	_____	^{o}F
3.	Upper Plenum	_____	$^{o}F \pm 10^{o}F$	_____	^{o}F
4.	Unbroken Hoop Hot Leg	_____	$^{o}F \pm 10^{o}F$	_____	^{o}F
5.	Broken Loop Hot Leg	_____	$^{o}F \pm 10^{o}F$	_____	^{o}F
6.	Unbroken Loop St. Gen. Inlet Plenum	_____	$^{o}F \pm 10^{o}F$	_____	^{o}F
7.	Unbroken Loop St. Gen. Outlet Plenum	_____	$^{o}F \pm 10^{o}F$	_____	^{o}F

8.	Unbroken Loop Pump Loop Seal	_____	$^{o}F \pm 10^{o}F$	_____	^{o}F
9.	Broken Loop Pump Loop Seal	_____	$^{o}F \pm 10^{o}F$	_____	^{o}F
10.	Unbroken Loop Cold Leg	_____	$^{o}F \pm 10^{o}F$	_____	^{o}F
11.	Broken Loop Cold Leg	_____	$^{o}F \pm 10^{o}F$	_____	^{o}F
12.	Downcomer Extension	_____	$^{o}F \pm 10^{o}F$	_____	^{o}F
13.	Downcomer	_____	$^{o}F \pm 10^{o}F$	_____	^{o}F
14.	Crossover Leg	_____	$^{o}F \pm 10^{o}F$	_____	^{o}F

V. Steam Generator Secondary Side Cooling System

1. Unbroken Loop St. Gen.

a.	Pressure	_____	psia $\pm$ 0.75 psia	_____	psia
b.	Fluid Temperature	_____	$^{o}F \pm 5^{o}F$	_____	^{o}F
c.	Flow Conditions:				
	o Circulating	_____	gpm $\pm$ 1%	_____	gpm
	o Boiling : Level	_____	$^{o}F \pm 1\%$	_____	ft $\pm$ 1%

VI. Cold Leg_____ / UHI_____ Injection

1.	Fluid Subcooling	$^{o}F \pm 5^{o}F$	^{o}F
2.	Pressure	psia $\pm$ 0.75 psia	psia
3.	Flow		

Rate	Specified Duration	Rate	Actual Duration
_____lb/sec	_____sec	_____lb/sec	_____sec

VII. Noncondensible Gas (He) Injection

1.	Gas Temperature	_____	$^{o}F \pm 5\%$	_____	^{o}F
2.	Gas Pressure	_____	psia $\pm$ 0.75 psia	_____	psia
3.	Injection Rate				

	Rate	Specified Duration	Rate	Actual Duration
Unbroken Loop Hot Leg:				
Step 1	____cm^3/min ± 1.2%	____min	____cm^3/min	____min
Step 2	____cm^3/min ± 1.2%	____min	____cm^3/min	____min
Step 3	____cm^3/min ± 1.2%	____min	____cm^3/min	____min
Step 4	____cm^3/min ± 1.2%	____min	____cm^3/min	____min
Step 5	____cm^3/min ± 1.2%	____min	____cm^3/min	____min
Step 6	____cm^3/min ± 1.2%	____min	____cm^3/min	____min
Step 7	____cm^3/min ± 1.2%	____min	____cm^3/min	____min
Step 8	____cm^3/min ± 1.2%	____min	____cm^3/min	____min
Step 9	____cm^3/min ± 1.2%	____min	____cm^3/min	____min
Step 10	____cm^3/min ± 1.2%	____min	____cm^3/min	____min
Broken Loop Hot Leg:				
Step 1	____cm^3/min ± 1.2%	____min	____cm^3/min	____min
Step 2	____cm^3/min ± 1.2%	____min	____cm^3/min	____min
Step 3	____cm^3/min ± 1.2%	____min	____cm^3/min	____min
Step 4	____cm^3/min ± 1.2%	____min	____cm^3/min	____min
Step 5	____cm^3/min ± 1.2%	____min	____cm^3/min	____min
Step 6	____cm^3/min ± 1.2%	____min	____cm^3/min	____min
Step 7	____cm^3/min ± 1.2%	____min	____cm^3/min	____min
Step 8	____cm^3/min ± 1.2%	____min	____cm^3/min	____min
Step 9	____cm^3/min ± 1.2%	____min	____cm^3/min	____min
Step 10	____cm^3/min ± 1.2%	____min	____cm^3/min	____min

VIII. Instrument Failures:

IX. Comments:

X. Validation/Invalidation Comments

APPENDIX H

SHAKEDOWN TEST MATRIX DETAILS

H-1. INTRODUCTION

The purpose of the shakedown tests is to verify that the facility and instrumentation function properly in order to conduct the natural circulation and reflux condensation tests. Also, tests were run to determine certain instrument calibration characteristics. These calibration data permitted a more accurate determination of the measured quantities during these tests.

H-2. SHAKEDOWN TEST MATRIX

Paragraphs H-3 through H-24 present a detailed description of each shakedown test.

H-3. Test No. 1 - Thermocouple Wiring Connection Checks

The purpose of this test is to check the continuity of each thermocouple wiring connection from the patch board to the computer. A known direct current millivolt signal will be applied to each circuit at the thermocouple patch board and compared to the respective computer output reading. If a deviation of more than $\pm$ 0.1 millivolts is observed, the circuit will be checked, repaired, and retested.

H-4. Test No. 2 - Heater Rod Power Connection Check

This test is intended to check the continuity of each heater rod power connection at the fuse panel. Using a Wheatstone bridge or an accurate digital ohmmeter, measurements will be recorded for each circuit resistance with an accuracy of $\pm$ 0.001 ohms. If an abnormal reading is taken, the circuit will be checked, repaired, and retested.

H-5. Test No. 3 - Instrumented Heater Rod Radial Location and Corresponding Thermocouple Checks

This test, to be performed only on rods whose thermocouples are connected to the computer, is intended to check the following items:

-- For each instrumented heater rod, all corresponding thermocouples will be checked for appropriate computer channel hookup and proper recording of data.

-- In completing the above check, radial power connections between the fuse panel and the appropriate heater rod will be confirmed.

-- The output polarity of each thermocouple at the computer will also be checked.

To conduct this test, all instrumented heater rods will be connected one at a time to a small, manually controlled power supply. The rod bundle will be filled with cold water at atmospheric pressure, accumulator no. 1 should be connected to the system, and the computer will be in operation for data acquisition. The overtemperature limit alarm will be set at 149°C (300°F). No gas overpressure should be applied to accumulator no. 1 and its vent valve will be fully opened.

In turn, minimal power will be applied to each heater rod and all corresponding thermocouple outputs will be recorded through the computer. After the power is disconnected, all computer channels will be scanned to check that the appropriate thermocouple computer channels have responded and that data were recorded properly.

H-6. Test No. 4 - Heater Rod, Thimble, and Steam Probe Thermocouple Axial Location Checks

This test, which will be performed using only instrumented heater rods, is intended to check the following items:

-- For each bundle thermocouple elevation all corresponding heater rod, thimble, and steam probe thermocouples are checked for appropriate computer channel axial hookup and proper recording of data.

-- In completing the above check each heater rod, thimble, and steam probe thermocouple elevation is confirmed.

To conduct this test, all heater rods will be connected to the power supply. Output from all heater rod, thimble, and steam probe thermocouples, as well as all test vessel differential pressure cells, will be recorded by the computer. The computer will also control bundle power automatically. An overtemperature limit set at 260°C (500°F) will be checked before the atmospheric pressure test is conducted. The lower plenum and crossover leg will be filled to the bottom of the heated length with water at room temperature or colder, and accumulator no. 1 should be connected to the system with its vent valve fully opened. A level sight gage will be installed across the test section to aid manual control of the flooding rate.

With the facility prepared as specified above, power is applied to the rod bundle until it is automatically tripped on an overtemperature condition. As the bundle is progressively flooded, all bundle thermocouple responses will be recorded to verify axial position.

H-7. Test No. 5 - Steam Generator Thermocouple Axial Location Checks

In this test, the steam generator secondary side will be filled to a known level and the response of the secondary fluid and tube wall thermocouples will be recorded. The thermocouples' response as the water level increases will indicate the installed axial position of the thermcouple. This test will be conducted on both steam generators.

H-8. Test No. 6 - Rod Bundle Housing Differential Pressure Cell Axial Location Checks; Steam Generator Plenum, Downcomer, Upper Plenum, and Accumulator Volume and Level Transmitter Checks; and Component Volume Checks

This test is intended to check the following items:

-- Rod bundle housing and loop differential pressure cells will be checked for appropriate computer channel hookup and proper operation.

-- Rod bundle housing control volumes will be established in 0.30 m (12 in.) increments.

-- The upper and lower plenum volumes and the downcomer volume will be checked.

-- Accumulators and steam generator plenum volumes will be determined.

For operation of this test, all loop and rod bundle housing differential pressure cells, along with the upper plenum, steam generator plenums, accumulators, and downcomer level transducers will be connected to the computer. A sight gage will be connected across the rod bundle housing and the other components and a weigh tank will be installed to measure the drained water. All differential pressure cells should be vented and the required transmission lines filled with water. At this point the rod bundle, steam generator outlet plenum, accumulator, and containment tanks will be filled with cold water.

The steam generator plenums will be filled to the top differential pressure tap. The rod bundle housing and upper plenum will be filled to the hot leg nozzles and the downcomer will be filled to the first overflow nozzle. The crossover leg volume will be included with the downcomer. The accumulators and tanks will be filled to the top differential pressure tap. Water will be drained and weighed from these components in various increments, and the differential pressure cell outputs will be recorded until the component is empty.

H-9. Test No. 7 - Pressure Transmitter and Differential Pressure Cell Zero Shifts

All differential pressure cell zero readings and zero shifts will be checked during the test.

For operation of this test, all housing, upper plenum, loop, steam generator, downcomer, and pump loop seal differential pressure cells will be connected to the computer. A nitrogen supply will be connected to accumulator no. 1 and the pressure control system will be operable.

When the test loop is empty and has reached atmospheric pressure, zero readings of all differential pressure cells will be checked. After the system is pressurized with nitrogen to 0.69 MPa (100 psia), all differential pressure cell zero shifts will be recorded.

H-10. Test No. 8 - Loop Primary Side Filling Procedure and System Volume Checks

This shakedown test will verify that a noncondensible gas (air) can be purged from the test loop with steam. This method will be used to get the loop water solid for the single-phase natural circulation tests.

The following procedure is suggested:

1. Loop primary side should be at atmopheric pressure. Accumulator no. 1 should be filled with demineralized water and isolated from the loop primary side. The steam generator secondary side should be empty.

2. Evacuate noncondensible gases (air, helium, or nitrogen) from the loop primary side using a vacuum pump connected to any loop drain line. Try to reach at least a vacuum of 20 inches of mercury.

3. Slowly start injecting low-pressure steam [about 0.14 MPa (20 psia)] through the test section lower plenum. Vent steam through all loop vents and drains. Continue injecting steam and venting steam until the loop piping, housing, and steam generators heat up to nearly 93°C (200°F) as indicated by wall thermocouples throughout the facility. Close all vent and drains except the downcomer extension vent. Close the downcomer isolation valve and continue venting steam through the downcomer vent for at least 5 minutes.

4. Close the downcomer extension vent and stop steam purging, and open the downcomer isolation valve.

5. Start filling the loop with water from the accumulator. The accumulator should be pressurized to 0.41 MPa (60 psia). If necessary, vent water through upper plenum, downcomer extension, and steam generator plenums to maintain a pressure lower than the accumulator gas overpressure. When water starts coming out of the steam generator plenum, close the downcomer isolation valve and continue venting through the downcomer extension vent until all steam or gases are vented and/or a solid stream of water is obtained.

6. Fill the steam generator secondary sides with cold water to condense any residual steam in the U-tubes.

7. Pressurize the loop to 0.41 MPa (60 psia) (accumulator gas overpressure) and start circulating water through the loop using the circulation pump. Maintain primary loop temperature below 38° ($100^{o}F$) using the steam generator secondary side cooling system. Vent through loop high point vents to purge any residual noncondensible gases. Stop loop circulation and steam generator secondary side cooling, and isolate accumulator no. 1 from the loop. Observe loop pressure for several minutes to ensure that loop conditions are stable and loop primary pressure remains about constant.

8. Monitor loop pressure and record amount of water that must be drained from the loop to reduce the loop pressure to 0.17 MPa (25 psia). The volume of the residual noncondensible gas in the loop at 0.41 MPa (60 psia) can be calculated from the following formula assuming isentropic expansion of ideal gases:

$$V_G = 0.293\ V_D$$

where

V_G = volume of noncondensible at 0.41 MPa (60 psia) loop pressure

V_D = volume of water drained from the system when reducing pressure from 0.41 MPa (60 psia) to 0.17 MPa (25 psia)

9. Drain and weigh the water from the system in various increments to check the system volumes.

H-11. Test No. 9 - Liquid Flowmeter Calibration Checks

This test is intended to check the following items:

-- An in-place check of the flowmeter calibrations for agreement with the full flow range calibrations performed prior to the shakedown tests

-- The flowmeters for appropriate computer channel hookup

To perform the turbine meter and bidirectional turbo-probe calibration check, the accumulator will be filled with cold water and pressurized with a nitrogen backpressure of 2.76 ± 0.14 MPa (400 ± 20 psig). The housing lower plenum drain will be open and the accumulator water will flow through the turbine meter to the crossover leg, through the turbo-probe and out the lower plenum drain.

The drain water will be collected over a timed interval and weighed. The recorded flowmeter data will be compared to the flow determined from the weigh tank data. These flowmeter calibration tests will be run for the flow rates given in table H-1. The table specifies 10 steady state flowrates and one variable stepped flowrate test.

At first, the flow through the flowmeters will be run to the drain. After steady flow conditions have been established, the flow will be diverted to the weigh tank. The accumulator differential pressure cell, accumulator fluid thermocouple, and all flowmeter outputs will be monitored during the test. At the end of the test, the flow will be switched to the drain again and flow measurements will be terminated.

To check the response of the bidirectional turbo-probe in the reverse flow direction, the turbo-probe will be turned 180 degrees in the crossover leg and selected steady-state tests will be run as described above. The desired flow rates are presented in table H-2.

For the shakedown test of the natural circulation flow loop, both cold legs will be piped to the downcomer and the circulation pump installed in the crossover leg will be used to provide loop flow. Loop flow rates will be measured with the turbine meters installed in each pump loop seal loop.

The expected loop pressure drop during this test is of the order of 0.69 Pa (0.10 psid); narrow range D/P transducers capable of measuring D/Ps in this range will be required. If additional flow resistance is needed to simulate the loop hydraulic characteristics of the reference PWR plant with idle main coolant pumps, a flow resistance orifice might have to be installed in the loop.

TABLE H-1

FLOW RATES FOR FLOWMETER AND BIDIRECTIONAL TURBO-PROBE CALIBRATION CHECKS

Flow Rate [m^3/sec (gal/min)]		Test Time (min)
6.3×10^{-5}	(1)	5
1.9×10^{-4}	(3)	5
3.2×10^{-4}	(5)	5
5.0×10^{-4}	(8)	5
7.6×10^{-4}	(12)	3
1.0×10^{-3}	(16)	3
1.3×10^{-3}	(20)	2
2.5×10^{-3}	(40)	2
3.8×10^{-3}	(60)	2
5.0×10^{-3}	(80)	2

TABLE H-2

FLOW RATES FOR BIDIRECTIONAL TURBO-PROBE REVERSE FLOW CALIBRATION CHECKS

Flow Rate [m^3/sec(gal/min)]		Test Time (min)
2.5×10^{-4}	(4)	10
6.3×10^{-4}	(10)	4
2.5×10^{-3}	(40)	2
5.0×10^{-3}	(80)	2

Prior to running the test, the loop must be purged to eliminate any air in the U-tubes and then filled solid with water, as described in paragraph H-10.

With the test loop filled solid and the steam generator secondary side drained, the shakedown test will be run by slowly initiating flow with the circulation pump. The pump flow can be regulated by adjusting one of the pump isolation valves. The flowrate will be controlled to achieve the total bundle flow rates in table H-3. Bundle flow is calculated from the sum of the cold leg turbine meter flowrates. Record all test loop differential pressures and the differential pressure from the probes in the primary sides of the steam generator tubes. Record loop pressure and temperature also.

H-12. Test No. 10 - Hot and Cold Leg Liquid Film Flowrate Meter Check

The special hot and cold leg piping used in the reflux condensation tests will contain a flowmeter to measure any condensed steam flowing back to the rod bundle upper plenum. During the reflux condensation tests, steam from the test section can condense in the steam generator tube bundle. Condensed steam in the inlet upflow and outlet downflow sections of the steam generator may flow back down into the hot and cold legs toward the test section. This phenomenon is called reflux condensation. To measure the reflux condensation liquid film flowrate, a small weir will be installed in each of the hot and cold legs to trap and divert the liquid film to a rotameter which will record the liquid mass flow rate.

These rotameters will be checked by injecting water into each steam generator inlet and outlet plenums and recording the flowrate detected by the hot and cold leg rotameters. The flowrate of the injected water will be monitored to confirm the rotameter accuracy. The rotameters will be checked over the flow range given in table H-4.

At the conclusion of the test, the water accumulated in the "dead" volume of the steam generator inlet plenum below the modified hot leg inlet nozzle will be measured. After disconnecting the temporary water supply lines from each inlet plenum, the inlet plenum will be drained and the volume of water that drains from the plenums recorded. This volume represents the amount of steam that must condense before the hot and cold leg rotameters will respond to the reflux condensation in the steam generator tubes.

TABLE H-3

FLOWRATES FOR PUMP LOOP SEAL
TURBINE METER CALIBRATION CHECKS

Total Flow Rate, Both Loops [m^3/sec(gal/min)]	
6.3×10^{-4}	(10)
1.3×10^{-3}	(20)
1.9×10^{-3}	(30)
2.5×10^{-3}	(40)

TABLE H-4

HOT LEG LIQUID FILM ROTAMETER CHECK RANGES

Unbroken Hot Leg Liquid Film Rotameter [m^3/sec(gal/min)]		Broken Hot Leg Liquid Film Rotameter [m^3sec(gal/min)]	
6.3×10^{-6}	(0.10)	3.1×10^{-6}	(0.05)
1.3×10^{-5}	(0.20)	6.3×10^{-6}	(0.10)
3.2×10^{-5}	(0.50)	1.6×10^{-5}	(0.25)
6.3×10^{-5}	(1.0)	3.2×10^{-5}	(0.50)
9.5×10^{-5}	(1.5)	4.7×10^{-5}	(0.75)
		6.3×10^{-4}	(1.0)

H-13. Test No. 11 - Test Loop Hydraulic Loss Coefficient Measurements

This test will be run by isolating parts of the test loop and supplying a known mass flow of steam to the isolated part of the loop. Installed test loop instrumentation will be monitored for flow and presure drop. From these data, the loop hydraulic loss coefficients will be calculated.

The unbroken loop piping will be isolated by closing the downcomer isolation valve and installing a blank orifice in the broken loop pump resistance orifice flanges. This will create a single flow path from the bundle lower plenum, through the unbroken loop to the downcomer. With the boiler supplying steam to the test section lower plenum, the loop hydraulic loss coefficients can be calculated from the loop pressure drop data. This test will be run at the test conditions specified in table H-5.

The broken loop will be isolated by using blind flanges in the unbroken loop pump resistance flanges. The flow rates specified in table H-5 will be established and the loop pressure drops recorded.

In each of the above tests, all loop differential pressures, pressures, and temperatures will be recorded.

H-14. Test No. 12 - Loop Heatup and Heat Loss Check

In this test the loop heatup procedure is verified and the heat loss through the pipe and component walls to the environment is measured.

The rod bundle and primary loop piping and steam generators will be heated to 164°C (328°F). The loop will then be isolated and the piping, insulation, ambient, and housing wall thermocouples will be monitored. The loop heat loss rate will be calculated from the rate of change of the wall temperatures with time.

The primary loop piping will be heated with steam from the boiler. The steam is injected into the lower plenum and vented from the downcomer extension vent. After the downcomer and crossover leg piping has been warmed up, the downcomer isolation valve

TABLE H-5

TEST PARAMETERS FOR TEST LOOP HYDRAULIC LOSS COEFFICIENT MEASUREMENTS

Loop Arrangement	Loop Pressure	Steam Mass Flowrate [kg/sec (lb/sec)]
Blind flanges in broken loop cold leg orifice	0.28 MPa (40 psia) at upper plenum	0.27 (0.60)
Blind flanges in broken loop cold leg orifice	0.28 MPa (40 psia) at upper plenum	0.14 (0.30)
Blind flanges in broken loop cold leg orifice	0.28 MPa (40 psia) at upper plenum	0.45 (0.10)
Blind flanges in unbroken loop cold leg orifice	0.28 MPa (40 psia) at upper plenum	0.91 (0.20)
Blind flanges in unbroken loop cold leg orifice	0.28 MPa (40 psia) at upper plenum	0.45 (0.10)

will be closed to force the steam through the rod bundle housing, steam generators, and primary loop piping.

The steam generator secondary sides will be heated by filling with just enough liquid to cover the lower bank of strip heaters. The lower bank of heaters will then be energized to warm up the secondary side of the steam generators to 149°C (300°F).

After the primary loop, rod bundle, and steam generator secondary sides have been heated to 149°C ± 10°C (300°F ± 18°F), the steam generator strip heaters will be deenergized and the secondary sides isolated. The primary loop and rod bundle should be drained of any condensed steam and then isolated.

To measure the loop heat loss, record all rod bundle housing, pipe wall, ambient, and steam generator shell thermocouples. These data should be recorded for a period of at least 1 hour, at intervals of 6 minutes or less. From these data, the rate of change of the pipe wall, rod bundle housing, and steam generator shell temperatures with time will be determined. The loop heat loss can then be calculated from the loop mass and heat capacity.

H-15. Test No. 13 - Isothermal Calibration of Steam Generator Bundle Thermocouples

The purpose of this test is to individually and differentially calibrate the primary side fluid, tube wall, and secondary side fluid thermocouples of both the broken and unbroken loop steam generators. This will be accomplished by performing isothermal (zero heat flux) calibration tests over the entire test temperature range of 25°C to 149°C (77°F to 300°F). Specific test details are outlined in table H-6.

The individual primary side fluid thermocouple calibration tests will be performed by establishing a uniform primary side fluid temperature with the steam generator secondary side evacuated. The primary loop will be filled with water and heated to the desired calibration temperature using the test section heater rods. The circulation pump will be used to establish a uniform loop temperature. The steam generator inlet and outlet lower plenum thermocouples are to be used to monitor primary loop temperatures. The voltage outputs of all bundle thermocouples are to be recorded.

TABLE H-6

TEST PARAMETERS FOR ISOTHERMAL CALIBRATION OF STEAM GENERATOR BUNDLE THERMOCOUPLES

Thermocouple Calibration	Loop/Steam Generator Configuration	Calibration Temperatures [°C(°F)]	
Individual primary fluid differential primary fluid, and tube wall	Primary loop liquid filled, steam generator secondary side evacuated	38	(100)
		66	(150)
		93	(200)
		121	(250)
		149	(300)
Individual secondary fluid, individual tube wall, differential secondary fluid, and tube wall	Primary loop evacuated, steam generator secondary side liquid filled	25	(77)
		38	(100)
		66	(150)
		93	(200)
		121	(250)
		149	(300)

The individual secondary side fluid and tube wall thermocouple calibration tests will be performed by establishing a uniform secondary side fluid temperature with the primary loops evacuated. The secondary side will be filled with water and heated to the desired calibration temperature using the shell strip heaters. The secondary side flowmeter thermocouples are to be used to monitor fluid temperatures. The secondary side circulation pumps will be used to establish uniform temperatures. The voltage outputs of all bundle thermocouples are to be recorded.

In addition to the individual thermocouple calibration tests outlined above, differential thermocouple connections are outlined in detail in paragraph 6-32. In these isothermal tests, the difference between primary fluid and tube wall thermocouples and the difference between the wall and secondary fluid thermocouples will be measured. In general, the measured voltage differences will not be zero because of the inherent calibration differences between the individual thermocouples. The output voltage bias will be measured over the entire test temperature range to establish trends as a function of temperature. Test procedures are the same as those discussed for individual thermocouple calibrations.

H-16. Test No. 14 - Steam Generator Tube Bundle Wall Thermocouple Controlled Heat Flux Calibration Tests

Instrumentation bench tests conducted during the course of the steam generator Separate Effects Test program showed that the wall-mounted tube wall thermocouples were affected by the magnitude of the local heat flux. The purpose of this test is to determine the calibration characteristics of the tube wall thermocouples as a funtion of local heat flux. This is accomplished by controlling the rod bundle power, primary and secondary flows, and inlet temperatures. Seven specific tests are outlined in table H-7. Once the system has reached stable conditions for each test, all bundle thermocouple outputs are to be recorded.

H-17. Test No. 15 - Saturation of Primary Side Water With Noncondensibles and Sampling System Checks

This test will determine how much helium (noncondensible gas) is required to saturate

TABLE H-7

TEST PARAMETERS FOR WALL THERMOCOUPLE CALIBRATION TESTS

Rod Bundle Power (kw)	Primary Loop Flow [m^3/sec(gal/min)]	PrimaryFluid Inlet Temperature[a] [°C (°F)]	Secondary Loop Flow [m^3sec(gal/min)]	Secondary Fluid Inlet Temperature[b] [°C (°F)]
50	0.0014 (22)	141 (285)	0.0032 (50)	38 (100)
70	0.0015 (23)	138 (280)	0.0032 (50)	38 (100)
90	0.0016 (25)	135 (275)	0.0032 (50)	38 (100)
120	0.0018 (28)	132 (270)	0.0032 (50)	38 (100)
150	0.0018 (29)	129 (265)	0.0032 (50)	38 (100)
190	0.0020 (31)	127 (260)	0.0032 (50)	38 (100)
220	0.0020 (32)	124 (255)	0.0032 (50)	38 (100)

Primary side pressure = 0.69 MPa (100 psia)

Secondary side pressure = 0.14 MPa (20 psia)

a. Rod bundle inlet

b. Steam generator inlet

the system primary side water, and how long it takes. The operation of the sampling system and helium analyzer instrumentation will also be checked. The test will provide a check between the sampling probe bench calibration and the facility sampling system.

The test should be conducted as follows:

1. Fill the system primary side with demineralized water as described in test no. 8, paragraph H-10.

2. Start forced circulation using the primary circulating pump and set flow of 2.00 x $10^{-3} m^3$/sec (31.7 gal/min) total flow as measured by the crossover leg bidirectional turbo-probe. If a three-to-one flow split through the unbroken and broken loops is assumed, the flow should be 1.50 x $10^{-3} m^3$/sec (23.8 gal/min) and 0.5 x 10^{-3} m^3/sec (7.9 gal/min) through these loops, respectively.

3. Accumulator no. 1 should be connected to the crossover leg, filled about half full of water at 121°F (250°F), with a helium gas overpressure of 0.80 MPa (115.5 psia).

4. Set gas (helium) injection flowmeters flow to 2124 cm^3/min for the unbroken hot leg and 708 cm^3/min for the broken hot leg. Inject the helium through each loop for about 3 minutes. Continue circulation for about 10 more minutes and take samples to determine if the helium concentration is 0.0125 cm^3 (0°C, 1 atm)/g H_2O at 1 atm. The gas should be analyzed using the GOW-MAC analyzer System by Westinghouse Forest Hills Chemistry Laboratory. If the specified helium concentration is not reached, add or adjust helium injection rates and time until the water is saturated with helium. Record helium rates and total amount, and time needed to saturate the primary side water with helium.

H-18. Test No. 16 - Noncondensibles Injection Checks

This test will check the helium injection system operation, and the interaction between the primary side and accumulator no. 1 (pressurizer). This test should be a continuation of the previous test no. 14 described in paragraph H-16.

The following procedure is recommended:

1. Set helium flows at 3087 cm^3/min for the unbroken loop and 1020 cm^3/min for the broken loop.

2. With the primary side water saturated with helium and accumulator no. 1 with helium gas overpressure as in test no. 14, start helium injection through each hot leg nozzle for 5 minutes. Monitor changes in loop pressure, temperature, accumulator liquid level and pressure, and flows indicated by the bidirectional flowmeter in the injection line.

3. Repeat the helium injection test with accumulator no. 1 isolated from the primary side, and monitor the change in pressure in the system.

4. After the system is at steady state for about 15 minutes, start taking helium samples from the steam generators, starting with the highest elevation, and determine helium concentrations and/or where the helium is concentrating in the steam generator tubes. It might be necessary to reconnect the accumulator to the primary system to compensate for the liquid being taken out during sampling. The accumulator pressure should be adjusted to the primary pressure reached after the helium injection.

H-19. Test No. 17 - System Pressure Relief Check

The purpose of this test is to check the ability of the spring-loaded pressure relief valves to depressurize the system in case of overpressurization. These valves are connected to one of the drain lines of the crossover leg.

The following procedure is suggested:

1. Set pressure relief valves at a pressure between 0.68 and 1.03 MPa (100 to 150 psia).

2. The primary side should be liquid full and accumulator no. 1 gas overpressure set initially at about 0.14 MPa (20 psi) below the relief pressure setting.

3. Slowly increase accumulator gas overpressure until the pressure relief valves open. Monitor pressure increase, overshoot if any, pressure at which the pressure relief valves are activated, and the time needed for these valves to relieve and reduce the primary side pressure.

H-20. Test No. 18 - Accumulator No. 1 Gas Overpressure Feed-and-Bleed System Checks

This test will check the feed-and-bleed capabilities of the accumulator's gas overpressurizing systems to maintain a constant pressure during level changes in these tanks due to primary side mass depletion or mass injection transients.

The following procedure is suggested:

1. Fill accumulator about half full with water.

2. Pressurize accumulator to 0.68 MPa (100 psia) using the gas overpressure system, and set feed-and-bleed controls to maintain this pressure.

3. Lower the accumulator level about 0.30 m (1 ft) by draining water at rate of about $1.6 \times 10^{-4} m^3$/sec (2.5 gal/sec) and determine if the gas feeding system can maintain a constant gas overpressure of 0.68 MPa (100 psia).

4. Raise the level of the accumulator by 0.30 m (1 ft) by injecting water at a rate of $1.6 \times 10^{-4} m^3$/sec (2.5 gal/min) and determine if the bleeding system can maintain the gas overpressure constant at 0.68 MPa (100 psia).

H-21. Test No. 19 - Cold Leg Injection Checks

The purpose of this test is to check the water injection system capability of injecting water at a rate of $7.82 \times 10^{-4} m^3$/sec (1.67 lb/sec or 12.4 gal/min) for 48 seconds while maintaining constant pressure in the primary side.

This test could be performed as follows:

1. Fill the primary side with water.

2. Have accumulator no. 1 connected to the primary side with a gas overpressure of 0.68 MPa (100 psia) and about 50 percent full.

3. Accumulator no. 2 is to be used as the water injection tank and should be conncted to the cold leg injection, be about half full, and have a gas overpressure high enough to maintain a constant injection rate.

4. All instrumentation related to the cold water injection should be operating and monitored by the computer.

5. Set injection flow to drain and adjust flow to 7.82×10^{-4} m^3/sec (1.67 lb/sec)

6. Switch flow to unbroken cold leg and record flows, temperatures, pressures, differential pressures, accumulator no. 1 and no. 2 levels, and corresponding gas overpressures.

H-22. Test No. 20 - UHI Injection Checks

This test will check the capability of the injection water system to simulate upper head injection (UHI) during different modes of natural circulation.

The test procedure is similar to the cold leg injection test except that water is injected at the bottom of the test section upper plenum and the rate of injection is 4.4×10^{-4} m^3/sec (0.94 lb/sec or 6.9 gal/min) for 347 seconds (5.78 minutes).

H-23. Test No. 21 - Steam Generators Secondary Side Cooling System Flowmeter Calibration Checks

The purpose of this test is to check in place the flowmeter calibrations and related instrumentation. The calibration checks of each flowmeter should be performed as follows:

1. The secondary side expansion tank (containment tank) should be filled with water at room temperature and the accumulator should have a gas overpressure high enough to ensure constant flow and pressure during calibration runs.

2. Weighing of the water flow through the flowmeter for a period of time should be used to check the flow coefficient used in the design of the orifice plate.

3. The range of check flows are listed in table H-8.

4. During each calibration check, record water temperature, differential pressure, weight of water, static pressure, and change in level of the expansion tank (containment tank) if possible.

H-24 Test No. 22 - Steam Generator Secondary Side Boiling Mode at Constant Level, Boiloff (Drying) and Recovery Checks

The purpose of this test is to check the operation of the steam secondary side cooling system in the boiling mode at constant level, boil the secondary side dry, and recover by establishing forced circulation through the secondary side.

The following procedure is suggested:

1. Start with both steam generator secondary sides about half full of water at room temperature and atmospheric pressure.

2. Activate the steam generator secondary side heat exchanger, and bypass the circulative pumps, since they will not be used in this test. The condensate should return to the steam generator secondary side.

3. Start with the primary side full of water and pressurized to about 0.41 MPa (60 psia).

4. Start forced circulation in the primary side using the circulating pump and closing the downcomer isolation valve. Adjust the flow to $2.0 \times 10^{-3} m^3/sec$ (32 gal/min).

TABLE H-8

FLOWRATES FOR STEAM GENERATOR
SECONDARY SIDE FLOWMETER CALIBRATION CHECKS

Flow Rate [m^3/sec(gal/min)]		Test Time (min)
UNBROKEN LOOP STEAM GENERATOR		
7.6×10^{-3}	(120)	3
6.3×10^{-3}	(100)	3
5.0×10^{-3}	(80)	3
3.8×10^{-3}	(60)	3
2.5×10^{-3}	(40)	3
1.3×10^{-3}	(20)	3
6.3×10^{-4}	(10)	3
BROKEN LOOP STEAM GENERATOR		
2.5×10^{-3}	(40)	3
1.9×10^{-3}	(30)	3
1.3×10^{-3}	(20)	3
6.3×10^{-4}	(10)	5
3.2×10^{-4}	(5)	5

5. The secondary side expansion tank should be filled with water at 93°C (200°F) and have a gas overpressure high enough to ensure injection of water in the secondary side of both steam generators during the recovery phase of the test. At the beginning of the test, the expansion tank should be isolated from the secondary side cooling system.

6. Start applying power to the bundle at a low level (about 50 kw) and increase it in steps until it reaches 100 kw.

7. Adjust primary side flow to maintain a 27°C (50°F) temperature rise across the bundle, and maintain single phase.

8. As the steam generator secondary sides start boiling, the generated steam should be condensed in the heat exchanger and return to the secondary side by gravity. Observe the secondary side level and determine if it can be maintained constant for about 15 minutes.

9. Start passing the condensate to drain, thus eliminating secondary side makeup, and observe the primary side behavior during this boiling period.

10. Continue the secondary side boiloff, monitoring the water level, until the secondary side has boiled dry or the primary side temperature starts rising. At this point, start injecting water to the secondary side from the expansion tank until it is full and forced circulation can be established. Terminate the test if the pressure in the primary side rises above 0.69 MPa (100 psia) by turning off bundle power and acclerating water injection to the steam generator secondary side, and activating the primary side relief valves.

H-26 Test No. 23 - Single-Phase, Two-Phase, and Reflux Condensation Shakedown Test

The purpose of this test is to make sure that all facility instrumentation and controls work properly, to determine the time constant of the system or how long it takes for the system to reach steady state after a stepped change has been made, and at what rates data should be taken during a test. This test is similar to test no. 8 of the test matrix and the same procedure should be followed. Test conditions are given in table H-9.

TABLE H-9

NATURAL CIRCULATION AND REFLUX CONDENSATION
SHAKEDOWN RUN TEST CONDITIONS

PRIMARY SIDE	
Pressure	0.69 MPa (100 psia)
Fluid temperature	126°C (258°F)
Bundle power	222.4 kw
STEAM GENERATOR SECONDARY SIDE	
Pressure	0.69 MPa (100 psia)
Fluid temperature	Ambient→159°C (319°F)
Temperature rise	39°C→6°C (70°→10°F)
Circulating	0.142→0.0101 m^3/sec (225→160 gal/min)
Liquid level	Full

Initial conditions and procedures are given below:

Initial Conditions:

1. The primary side should be filled with water at 126°C (258°F) and 0.69 MPa (100 psia). This water should not have any dissolved helium.

2. The steam generator secondary sides should be filled with water at ambient temperature but pressurized to 0.69 MPa (100 psia), which means that the gas overpressure in the expansion tank should be 0.85 MPa (123 psia) with an initial water level of 1.83 m (6 ft).

3. The pressurizer (accumulator no. 1) should have a level of 0.61 m (2 ft) with water at 126°C (258°F) and a gas overpressure of 0.85 MPa (124 psia) and should be connected to primary side.

4. The power controls should be set initially to provide 55 kw to the bundle.

Procedure:

1. Turn on power to the bundle, and at the same time start circulation in the steam generator secondary sides. Adjust cooling flows in order to achieve primary side natural circulation and maintain 39°C (70°F) subcooling at the bundle inlet.

2. Increase power to the bundle in steps until the required 222.4 kw is reached.

3. Simultaneously adjust steam generator secondary side cooling flows to maintain 39 °C (70 °F) subcooling at the bundle inlet.

4. After the system has been at steady state for 15 minutes, start decreasing the steam generator secondary side cooling flows in steps; this will reduce the amount of subcooling at the rod bundle inlet. If reducing the secondary flows is not enough because of the large heat transfer area of the steam generators, start reducing the cooling water to the secondary side heat exchanger. This will start raising the

temperature of the secondary side water, as well as raising the primary side temperature.

5. As the bundle inlet subcooling decreases (temperature increases), boiling will occur in the bundle and two-phase flow natural circulation should be established. Carefully monitor loop conditions to determine the time when this mode of natural circulation is achieved. In particular, monitor and measure the primary side mass depletion due to liquid thermal expansion as the temperature increases and due to phase changes when steam generation is started. This mass will go into the pressurizer causing an increase in level. Mass depletion rates could also be determined by measuring reverse flows in the injection line with the bidirectional turbine meter. In addition, observe flow regime changes through the upper plenum windows and steam generator inlet plenum windows. The bundle, upper plenum, and steam generator inlet plenum differential pressure measurements could also indicate when voids start forming in the primary side.

6. After operating in the two-phase natural circulation mode for about 30 minutes, start decreasing the cooling water flow to the steam generator secondary side heat exchanger, and if necessary, decrease the steam generator secondary side flows, until the temperature difference between the primary and secondary side is about $6^{o}C$ ($10^{o}F$). As the temperature in the primary side increases, approaching saturation, boiling could occur at the top of the steam generator tubes when the lowest system pressure exists. This steam and the steam being generated in the bundle, if any, will eventually displace the water out of the steam generator tubes, steam generator plenums, hot legs, cold leg horizontal runs, upper plenum, and downcomer extension volumes above the hot and cold legs, respectively. The displaced liquid will be going into the pressurizer and raising its level by about 2.3 m (7.4 ft). Voiding of the components mentioned above will cause a reduction in primary side hydrostatic head equivalent to about 0.12 MPa (17 psia), which requires a reduction of the pressurizer gas overpressure from the initial pressure of 0.85 MPa (124 psia) down to 0.74 MPa (107 psia) when the hydrostatic head induced by the pressurizer raised level is taken into account. This reduction in pressure is necessary if a 0.69 MPa (100 psia) static pressure is to be maintained at the top of the upper plenum. Since the reduction in hydrostatic head occurs in a transition

period, it might be necessary to adjust the pressurizer gas overpressure as the primary side water level decreases during this transient period.

7. Once the reflux condensation mode has been established, adjust system conditions to maintain a water level at 0.61 m (2 ft) below the upper plenum hot leg exit nozzles, and operate the system at steady state for 30 minutes.

8. During this period, measure condensed liquid film flows in the hot and cold legs with the liquid film rotameter system installed in each leg.

Measurements of interest are primary side flows, system pressure, system pressure drops; steam generator secondary side flows and temperatures; mass inventory changes in the primary side and pressurizer, temperature changes and distribution throughout the system; transient conditions and times needed to go from one mode of natural circulation to another; time when steam generators start voiding; differential temperatures between secondary side fluid, tube wall, and primary side in the steam generators; liquid film flow, thickness, and velocity during reflux condensation mode; and steam velocities in the hot legs during reflux condensation.

H-27. Test No. 24 - Forced Convection Secondary Side Film Coefficient Calibration Test

The purpose of this test is to develop a set of correlations for the steam generator secondary side film coefficients. This will be accomplished by controlling the primary and secondary side flow and temperature boundary conditions. Table H-10 specifies the boundary conditions for nine tests. Once boundary conditions have been stablized, all steam generator secondary fluid, tube wall, and primary fluid thermocouple outputs are to be measured.

TABLE H-10

FORCED CONVECTION SECONDARY SIDE
FILM COEFFICIENT CALIBRATION TEST BOUNDARY CONDITIONS

SECONDARY SIDE		
Pressure [(MPa psia)]	Flowrate [m^3/sec (gal/min)]	Inlet Temperature [oC (oF)]
0.69 (100)	0.0013 (20)	93 (200)
0.69 (100)	0.0019 (30)	110 (230)
0.69 (100)	0.0025 (40)	116 (240)
0.69 (100)	0.0032 (50)	121 (250)
0.69 (100)	0.0038 (60)	124 (255)
0.69 (100)	0.0050 (80)	127 (260)
0.99 (100)	0.0063 (100)	129 (265)
0.69 (100)	0.0088 (140)	135 (275)
0.69 (100)	0.010 (160)	143 (290)

PRIMARY SIDE
Pressure = 0.90 MPa (130 psia) Bundle power = 222.4 kw Flowrate = 0.0038 m^3/sec (60 gal/min) Bundle inlet temperature = 146 ^oC (295^oF)

NRC/EPRI/WESTINGHOUSE REPORT NO. 12
EXTERNAL DISTRIBUTION

Dr. L. S. Tong, Chief Scientist
Office of Nuclear Regulatory Research
U.S. Nuclear Regulatory Commission
Washington, DC 20555

Dr. L. H. Sullivan
Division of Accident Evaluation
U. S. Nuclear Regulatory Commission
Washington, DC 20555

Dr. Richard Lee
Experimental Programs Branch
U. S. Nuclear Regulatory Commission
Washington, DC 20555

Mr. K. V. Morton, Chief
Research Contracts Branch
Division of Contracts
U. S. Nuclear Regulatory Commission
Washington, DC 20555

Dr. Wayne Hodges
DSS
U. S. Nuclear Regulatory Commission
Washington, DC 20555

Mr. L. Phillips
NRR
U. S. Nuclear Regulatory Commission
Washington, DC 20555

Mr. Harry Balukjan
NRR
U. S. Nuclear Regulatory Commission
Washington, DC 20555

Dr. D. Ross, Deputy Director
Office of Nuclear Regulatory Research
U. S. Nuclear Regulatory Commission
Washington, DC 20555

Dr. W. Johnston
Core Performance Branch, NRR
U. S. Nuclear Regulatory Commission
Washington, DC 20555

Dr. L. E. Hochreiter (50 copies)
MNC 426
Westinghouse Electric Corporation
P.O. Box 355
Pittsburgh, PA 15230

Dr. B. Bingham
Babcock & Wilcox Company
P. O. Box 1206
Lynchburg, VA 24505

Mr. N. H. Shah
Babcock & Wilcox Co. (NPGD)
P.O. Box 1260
Lynchburg, VA 24505

Mr. W. Kayser
Exxon Nuclear
2101 Horn Rapids Road
Richland, WA 99352

Dr. F. Aguilan
EG&G Idaho, Inc.
P. O. Box 1625
Idaho Falls, ID 83415

Mr. G. Sozzi
General Electric Co.
175 Curtner Avenue
San Jose, CA 95125

Dr. P. Griffith
Dept. of Mechanical Engineering
MIT
Cambridge, MA 02139

Dr. P. A. Lottes
Argonne National Laboratory
9700 South Cass Avenue
Argonne, IL 60439

Mr. G. Otey
Sandia National Laboratory
P.O. Box 5800
Albuquerque, NM 87185

Mr. F. Mynatt
Engineering Technology Division
Oak Ridge National Laboratory
Box 7
Oak Ridge, TN 37830

Mr. R. Jensen
Intermountain Technology
Box 1604
Idaho Falls, ID 83415

Mr. F. D. Lang
Energy Incorporated
P. O. Box 763
Idaho Falls, ID 83415

Dr. J. Chen
Lehigh University
Dept. of Mechanical Engineering
Bethlehem, PA 18015

Dr. Avtar Singh (5 copies)
Nuclear Power Division
Electric Power Research Institute
P.O. Box 10412
Palo Alto, CA 94304

Dr. K. H. Sun
Nuclear Power Division
Electric Power Research Institute
P. O. Box 10412
Palo Alto, CA 94304

Dr. J. J. Cudlin
Power Generation Group
Babcock & Wilcox
P. O. Box 1260
Lynchburg, VA 24505

Mr. J. Longo, Jr.
Combustion Engineering
P. O. Box 500
Windsor, CT 06095

Mr. M. J. Blaisdell
Combustion Engineering
P.O. Box 500
Windsor, CT 06095

Dr. K. P. Galbraith
Nuclear Safety Engineering
Exxon Nuclear Company
2101 Horn Rapids Road
Richland, WA 99352

Dr. J. A. Block
Creare Inc.
Hanover, NH 03755

Dr. W. Hancox
Whiteshell Nuclear Laboratory
Atomic Energy of Canada
Pinawa, Manitoba
Canada ROE 1LO

Professor T. Theofanous
Department of Nuclear Energy
Purdue University
West Lafayette, IN 47907

Professor I. Catton
Department of Chemical, Nuclear, and
Thermal Engineering
University of California at Los Angeles
Los Angeles, CA 90024

Dr. Max W. Carbon
Department of Nuclear Engineering
The University of Wisconsin
Madison, WI 53706

Professor R. A. Seban
Department of Mechanical Engineering
University of California
Berkeley, CA 94720

Professor W. Y. Chon
Department of Engineering Science,
Aerospace Engineering, and
Nuclear Engineering
State University of New York
Buffalo, NY 14214

Dr. R. Lahey
Department of Nuclear Engineering
Rensselaer Polytechnic Institute
Troy, NY 12181

Dr. Owen Jones
Brookhaven National Laboratory
Building 820
Upton, NY 11973

Professor E. V. McAssey, Jr.
Dept. of Mechanical Engineering
Villanova University
Villanova, PA 19085

Professor S. C. Yao
Department of Mechanical Engineering
Carnegie-Mellon University
Pittsburgh, PA 15213

Dr. S. J. Board
CEGB
Berkeley Nuclear Laboratory
Berkeley
Gloucestershire, England

Prof. T. Wu
California Institute of Technology
Pasadena, CA 91109

Dr. S. Levy
S. Levy, Inc.
1901 S. Bascom Ave. Suite 275
Campbell, CA 95008

Professor A. Tapucu
Ecole Polytechnique,
Universite de Montreal
Institut de Genie Nucleaire
Casier Postale 6079
Succursal "A,"
Montreal, Quebec H3C 3A7

Mr. Marv Thurgood
Battelle P.N.L.
P.O. Box 999
Richland, WA 99352

Mr. Don Ogden
EG&G Idaho, Inc.
P.O. Box 1625
Idaho Falls, ID 83415

Mr. Peter Davis
Inter-Mountain Technology
P.O. Box 1604
Idaho Falls, ID 83415

Distribution Services Branch (5 copies)
Nuclear Regulatory Commission
7920 Norfolk Avenue
Bethesda, MD 20555

Mr. E. T. Laats
EG&G Idaho, Inc.
P. O. Box 1625
Idaho Falls, ID 83415

Mr. J. Kelly
Battelle P.N.L.
P.O. Box 999
Richland, Wash. 99352

Dr. V. J. Dhir
University of California at
Los Angeles
5534 Boelter Hall
Los Angeles, CA 90024

Dr. Y. Y. Hsu
Department of Chemical
and Nuclear Engineering
University of Maryland
College Park, Maryland 20742

NRC FORM 335 (11-81)

U.S. NUCLEAR REGULATORY COMMISSION

BIBLIOGRAPHIC DATA SHEET

1. REPORT NUMBER (Assigned by DDC)
NUREG/CR-2401
EPRI NP-2015
WCAP-9973

4. TITLE AND SUBTITLE (Add Volume No., if appropriate)
PWR FLECHT SEASET Systems Effects Natural Circulation and Reflux Condensation Task Plan Report
NRC/EPRI/Westinghouse Report No. 12

2. (Leave blank)

3. RECIPIENT'S ACCESSION NO.

7. AUTHOR(S) E.R. Rosal, L.E. Hochreiter, T.S. Andreychek, N. Lee, S.D. Rupprecht, S. Wong, F.J. Kordalski, W.M. Kavalkovich, R. Anaglia, B.R. Sinwell, A.C. Wenzel

5. DATE REPORT COMPLETED

MONTH	YEAR
November	1982

9. PERFORMING ORGANIZATION NAME AND MAILING ADDRESS (Include Zip Code)
Westinghouse Electric Corporation
Nuclear Energy Systems
Post Office Box 355
Pittsburgh, Pennsylvania 15230

DATE REPORT ISSUED

MONTH	YEAR
February	1983

6. (Leave blank)

8. (Leave blank)

12. SPONSORING ORGANIZATION NAME AND MAILING ADDRESS (Include Zip Code)
U. S. Nuclear Regulatory Comm.
Office of Nuclear Regulatory Research
Division of Accident Evaluation
Washington, D. C. 20555

Electric Power Res. Ins.
P. O. Box 10412
Palo Alto, CA 94303

10. PROJECT/TASK/WORK UNIT NO.

11. FIN NO.
B6204

13. TYPE OF REPORT
Technical Topical Report

PERIOD COVERED (Inclusive dates)
September 1978 - June 1979

15. SUPPLEMENTARY NOTES

14. (Leave blank)

16. ABSTRACT (200 words or less)

This report presents a descriptive plan of tests for the Systems Effects Task of the Full Length Emergency Cooling Heat Transfer Separate Effects and Systems Effects (FLECHT SEASET) program. This task is designed to produce experimental data which can be used to address issues related to natural circulation cooling modes in a pressurized water reactor (PWR). The natural circulation tests were planned in direct response to the accident at Three Mile Island. The tests consist of natural circulation and reflux condensation cooling experiments using electric heating rods to simulate current nuclear core arrays of PWR and PWR fuel vendors. The FLECHT SEASET systems effects test facility with a scale factor of 1/307 with respect to a four-loop 3411 MWt PWR was used. The facility was designed with all elevations identical to those of a PWR. Two full-height steam generators with active secondary side heat removal are also part of the system design. All tests were conducted with a consine axial power profile. The data obtained from these tests will be used to evaluate the effects of components and systems parameters during natural circulation cooling modes.

17. KEY WORDS AND DOCUMENT ANALYSIS

17a. DESCRIPTORS

17b. IDENTIFIERS/OPEN-ENDED TERMS

18. AVAILABILITY STATEMENT
Unlimited

19. SECURITY CLASS (This report)
Unclassified

20. SECURITY CLASS (This page)
Unclassified

21. NO. OF PAGES

22. PRICE
$

NRC FORM 335 (11-81)

UNITED STATES
NUCLEAR REGULATORY COMMISSION
WASHINGTON, D.C. 20555

OFFICIAL BUSINESS
PENALTY FOR PRIVATE USE, $300

FOURTH-CLASS MAIL
POSTAGE & FEES PAID
USNRC
WASH. D. C.
PERMIT No. G-67