To: Dennis Girroir 5/15/2001

From: Ralph Connell

Re: Report for IWE Inspections Performed for RFO22
(Reference "Report for IWE Inspections Performed for RFO21" dated 12/02/1999)

INTRODUCTION:

The objective in the current period for this new IWE inspection program was to gather as much information as we could for RFO21 and RFO22. During RFO21 the goal was to perform as many inspections as possible within the acceptable window without causing any interference with other outage work activities. The remainder of the required first period examinations was performed either before or during RFO22.

After the IWE examinations performed during RFO 21 the Program Procedure PP7024 was revised to incorporate lessons learned. Some revisions were made to the appendices regarding inspected components and inspection criteria. As a result some of the examinations originally listed for the 1st period were revised and are reflected in the completion schedule included in this report. All required VT-3 examinations were moved to the 3rd period as required by the ASME Section XI Code 1992/92A.

DISCUSSION:

The ASME Section XI Subsection IWE Code requires an examination of the coated surfaces in order to determine the condition of the substrate. This examination of coated surfaces is for evidence of flaking, blistering, peeling, discoloration and other signs of distress of the underlying metal. The IWE examinations performed for RFO21 found only two areas of coating with signs of distress affecting the substrate. Those two areas were located at the drywell interior moisture barrier and the other was on the drywell surface at the X-5G penetration. Both of these were evaluated by Mechanical Design Engineering and dispositions provided via the IDR process. IWE examinations during RFO22 identified two more areas. These were areas of pitting and corrosion in the vent header and corrosion in the interior of penetrations X-207A-H. Both of these were also evaluated by Mechanical Design Engineering and dispositions provided via the IDR process. At many areas of the containment there is peeling or discoloration. Both of these issues have been previously identified and accepted via the OP5250 inspections.

The Maintenance Department has been performing containment inspections for several years via OP5250 to evaluate the condition of the coatings on containment surfaces. These inspections have compiled an excellent source of data documenting the conditions of the coatings and how these coatings are maintaining over time. The information provided from these reports provides the basis for disposition of issues identified on the IWE reports such as coating peeling and blistering.

Several areas were identified as inaccessible during the RFO21 and RFO22 IWE examination process. Those inaccessible areas are generally defined in PP7024. More specific information is included with the data supplied in this report.

DETAILS:

TORUS SURFACE

The surface from just below the catwalk on the exterior surface to the horizontal mid point of the torus was inspected prior to RFO22

TORUS PENETRATIONS

The remaining torus penetrations were examined prior to RFO22 and during RFO22. Penetrations X-207A-H were identified as having corrosion exceeding the provided acceptance criteria. IDR 01-08 was written on this item. This was addressed by Design Engineering and a design wall thickness for these penetrations was provided. The X-207A-H penetrations are acceptable for continued use and the corrosion identified does not exceed the required design wall thickness.

Torus penetration (includes penetrations in the vent system) examinations were completed for the first period.

VENT HEADER INTERIOR SURFACE

The interior surface of the vent header examination was completed during RFO22. There were areas of pitting and corrosion identified in the vent header that exceeded the provided acceptance criteria. IDR 01-07 was written to address the areas of pitting and corrosion. Design Engineering addressed this IDR and provided new acceptance criteria for the vent header corrosion identified. All areas are within the required design wall thickness provided by the Design Engineering resolution and are acceptable for continued operation.

AUGMENTED DRYWELL SURFACES

After review of the data gathered during RFO21, a portion of the containment surface at the joint seal area was declared as augmented. This area was examined and documented during RFO22. No change was identified in the as inspected condition between RFO21 and RFO22 in the augmented area.

Since the area of the augmented surface was being prepared for seal installation and painting the opportunity to examine this region with white metal exposed and all corrosion removed presented itself. The entire circumference in the moisture barrier area was examined and the areas of pitting and pit depths were identified. All pitting

identified by this examination were bounded by the 1999 evaluation, VYM 99/139, and are acceptable for continued operation of the drywell.

DRYWELL PENETRATIONS

Forty-three (43) percent of the required first period drywell penetration examinations were completed during RFO21 the remainder was examined either prior to or during RFO22. Many of these penetrations depicted debris and peeling paint. The dirt/debris is not considered to be detrimental to the containment structure. All penetration cavities were dry with no visible indication of moisture. The peeling paint was similar to that identified in the maintenance reports and is not unusual for the age and environmental conditions experienced by the coating.

The dirt/debris identified in the drywell penetration cavities is a housekeeping issue only, not a containment integrity concern. All large debris located in the penetrations examined has been removed. The remaining debris consists of the accumulation of dirt, dust and paint chips over the life of the plant. The quantity of debris in the penetrations identified is not a containment integrity concern. Most dirt/debris was lying in the concrete sleeve and not in contact with the penetration. All penetrations examined (except for X-207A-H) were dry with no indication of water. The penetrations typically have a small access and pose difficulty cleaning. The dilemma from inside the drywell is the accessibility to the penetrations and the ALARA concerns.

CONTAINMENT MOISTURE BARRIER

The drywell moisture barrier at the concrete floor to steel interface on the 238' level was identified as failed during RFO21 examination. During RFO 22 this seal was replaced. To deal with the paint chipping and corrosion in the seal area and to accommodate the seal installation a six-inch wide band of paint was removed in the seal area for the full circumference of the drywell at the 238' level. The seal was reinstalled per minor mod #2000-010. The six-inch band was re-coated with non-qualified coating. The area of the seal and coating was examined after installation to document the as installed condition.

This seal acts as a gasket at the concrete to steel interface to prevent moisture from penetrating under the concrete and to prevent it from setting in the interface setting up localized corrosion. This area is an area that regularly gets flooded with water due to the activities that take place during outages in the dry well. This area also is an area that experiences wear and tear at a much higher rate than the rest of the containment due to its location. As a result of the location and outage activities this is an area that requires regular maintenance to keep the moisture barrier seal and the paint in the moisture barrier area intact and properly protecting the steel containment. The logistics of trying to place qualified coating at this location and then set up to regularly maintain it can be difficult as was seen during RFO22 not to mention very costly. I recommend that this moisture barrier area and the six-inch band of paint be declared a high maintenance area and designed as an area where unqualified coatings are approved and utilized. This will make the routine maintenance of this area much easier to perform resulting in better

maintenance of this area in the future. If this approach were approved, repainting with qualified coating would not be required only maintenance activity to maintain the integrity of the non-qualified paint and moisture barrier seal. This maintenance should become a routine PM.

PRESSURE RETAINING BOLTING

Bolting examinations for X-200A & B and V16-19-5G & H were completed during RFO22 in the removed condition. Bolting examinations for V16-19-5A-F was examined in place. This completes the required first period IWE bolting examinations.

SUMMARY:

An estimated 80% of IWE examinations are completed prior to or during RFO21. The remaining 20% were completed prior to or during RFO22 to complete the first period examination requirements.

There were two new IDR's generated, per DP4027, for containment issues during RFO22. All of these issues were addressed by Mechanical Design Engineering prior to RFO22 startup.

Please find attached to this report for reference the Summary of First Period IWE Examinations. This report provides details for the first period examinations.

11/23/1999 SUMMARY OF FIRST PERIOD IWE EXAMINATIONS

CONTAINMENT SURFACES (TORUS BAYS)				ASME SECTION XI EXAM. CATEGORY: E-A
ASME SECTION XI ITEM N0.	ISI IDENTIFICATION NO./DESCRIPTION	EXAM	% COMPLETE TO DATE	REMARKS
E1.11	TORUS BAY 1	GV	100 %	Internal surface above water line completed RFO 21 External surface except area from catwalk down to belt line completed. Remaining area to be inspected after S/U RFO21(completed pre RFO 22) Note: VT-1 completed below water line RFO20
E1.11	TORUS BAY 2	GV	100 %	Internal surface above water line completed RFO 21 External surface except area from catwalk down to belt line completed. Remaining area to be inspected after S/U RFO21 (completed pre RFO 22) Note: VT-1 completed below water line RFO20
E1.11	TORUS BAY 3	GV	100 %	Internal surface above water line completed RFO 21 External surface except area from catwalk down to belt line completed. Remaining area to be inspected after S/U RFO21(completed pre RFO 22) Note: VT-1 completed below water line RFO20
E1.11	TORUS BAY 4	GV	100 %	Internal surface above water line completed RFO 21 External surface except area from catwalk down to belt line completed. Remaining area to be inspected after S/U RFO21(completed pre RFO 22) Note: VT-1 completed below water line RFO20
E1.11	TORUS BAY 5	GV	100 %	Internal surface above water line completed RFO 21 External surface except area from catwalk down to belt line completed. Remaining area to be inspected after S/U RFO21(completed pre RFO 22) Note: VT-1 completed below water line RFO20
E1.11	TORUS BAY 6	GV	100 %	Internal surface above water line completed RFO 21 External surface except area from catwalk down to belt line completed. Remaining area to be inspected after S/U RFO21(completed pre RFO 22) Note: VT-1 completed below water line RFO20
E1.11	TORUS BAY 7	GV	100 %	Internal surface above water line completed RFO 21 External surface except area from catwalk down to belt line completed. Remaining area to be inspected after S/U RFO21(completed pre RFO 22) Note: VT-1 completed below water line RFO20
E1.11	TORUS BAY 8	GV	100 %	Internal surface above water line completed RFO 21 External surface except area from catwalk down to belt line completed. Remaining area to be inspected after S/U RFO21(completed pre RFO 22) Note: VT-1 completed below water line RFO20
E1.11	TORUS BAY 9	GV	100 %	Internal surface above water line completed RFO 21 External surface except area from catwalk down to belt line completed. Remaining area to be inspected after S/U RFO21(completed pre RFO 22) Note: VT-1 completed below water line RFO20
E1.11	TORUS BAY 10	GV	100 %	Internal surface above water line completed RFO 21 External surface except area from catwalk down to belt line completed. Remaining area to be inspected after S/U RFO21(completed pre RFO 22) Note: VT-1 completed below water line RFO20
E1.11	TORUS BAY 11	GV	100 %	Internal surface above water line completed RFO 21 External surface except area from catwalk down to belt line completed. Remaining area to be inspected after S/U RFO21(completed pre RFO 22) Note: VT-1 completed below water line RFO20
E1.11	TORUS BAY 12	GV	100 %	Internal surface above water line completed RFO 21 External surface except area from catwalk down to belt line completed. Remaining area to be inspected after S/U RFO21(completed pre RFO 22) Note: VT-1 completed below water line RFO20
E1.11	TORUS BAY 13	GV	100 %	Internal surface above water line completed RFO 21 External surface except area from catwalk down to belt line completed. Remaining area to be inspected after S/U RFO21(completed pre RFO 22) Note: VT-1 completed below water line RFO20
E1.11	TORUS BAY 14	GV	100 %	Internal surface above water line completed RFO 21 External surface except area from catwalk down to belt line completed. Remaining area to be inspected after S/U RFO21(completed pre RFO 22) Note: VT-1 completed below water line RFO20
E1.11	TORUS BAY 15	GV	100 %	Internal surface above water line completed RFO 21 External surface except area from catwalk down to belt line completed. Remaining area to be inspected after S/U RFO21(completed pre RFO 22) Note: VT-1 completed below water line RFO20

E1.11	TORUS BAY 16	GV	100 %	Internal surface above water line completed RFO 21 External surface except area from catwalk down to belt line completed. Remaining area to be inspected after S/U RFO21(completed pre RFO 22) Note: VT-1 completed below water line RFO20
ASME SECTION XI EXAM. CATEGORY: E-A				
E1.11	VENT SYSTEM BAY 2 (VENT LINE ASSEMBLY, VACUUM BREAKER LINES, AND VENT HEADER IN BAY 2 AND BAY 3)	GV	100%	THE VENT LINE WAS COMPLETED FROM THE INTERNAL SURFACE RFO21. THE VACUUM BREAKER LINES WERE COMPLETED FROM THE EXTERNAL SURFACE TO THE PENETRATION 203 ELBOW THEN FROM THE INSIDE FROM THE 203 PENETRATION TO THE ELBOW VERTICAL WELD. THE EXTERNAL SURFACE OF THE VENT HEADER AND INTERNAL AND EXTERNAL SURFACES OF THE DOWNCOMERS WHERE COMPLETED RFO20. THE VENT HEADER INTERIOR, VENT LINE EXTERIOR, AND THE REMAINDER OF THE VACUUM LINE WILL BE SCHEDULED FOR RFO22. (completed pre RFO 22)
E1.20		VT3	100%	THE VENT LINE WAS COMPLETED FROM THE INTERNAL SURFACE RFO21. THE VACUUM BREAKER LINES WERE COMPLETED FROM THE EXTERNAL SURFACE TO THE PENETRATION 203 ELBOW THEN FROM THE INSIDE FROM THE 203 PENETRATION TO THE ELBOW VERTICAL WELD. THE EXTERNAL SURFACE OF THE VENT HEADER AND INTERNAL AND EXTERNAL DOWN COMER SURFACES WHERE COMPLETED RFO20.
E1.11	VENT SYSTEM BAY 4 (VENT LINE ASSEMBLY, VACUUM BREAKER LINES, AND VENT HEADER IN BAY 4 AND BAY 5)	GV	100%	THE VENT LINE WAS COMPLETED FROM THE INTERNAL SURFACE RFO21. THE VACUUM BREAKER LINES WERE COMPLETED FROM THE EXTERNAL SURFACE TO THE PENETRATION 203 ELBOW THEN FROM THE INSIDE FROM THE 203 PENETRATION TO THE ELBOW VERTICAL WELD. THE EXTERNAL SURFACE OF THE VENT HEADER AND INTERNAL AND EXTERNAL SURFACES OF THE DOWNCOMERS WHERE COMPLETED RFO20. THE VENT HEADER INTERIOR, VENT LINE EXTERIOR, AND THE REMAINDER OF THE VACUUM LINE WILL BE SCHEDULED FOR RFO22. (completed pre RFO 22)
E1.20		VT3	100%	THE VENT LINE WAS COMPLETED FROM THE INTERNAL SURFACE RFO21. THE VACUUM BREAKER LINES WERE COMPLETED FROM THE EXTERNAL SURFACE TO THE PENETRATION 203 ELBOW THEN FROM THE INSIDE FROM THE 203 PENETRATION TO THE ELBOW VERTICAL WELD. THE EXTERNAL SURFACE OF THE VENT HEADER AND INTERNAL AND EXTERNAL SURFACES OF THE DOWNCOMERS WHERE COMPLETED RFO20.
E1.11	VENT SYSTEM BAY 6 (VENT LINE ASSEMBLY, VACUUM BREAKER LINES, AND VENT HEADER IN BAY 6 AND BAY 7)	GV	100%	THE VENT LINE WAS COMPLETED FROM THE INTERNAL SURFACE RFO21. THE VACUUM BREAKER LINES WERE COMPLETED FROM THE EXTERNAL SURFACE TO THE PENETRATION 203 ELBOW THEN FROM THE INSIDE FROM THE 203 PENETRATION TO THE ELBOW VERTICAL WELD. THE EXTERNAL SURFACE OF THE VENT HEADER AND INTERNAL AND EXTERNAL SURFACES OF THE DOWNCOMERS WHERE COMPLETED RFO20. THE VENT HEADER INTERIOR, VENT LINE EXTERIOR, AND THE REMAINDER OF THE VACUUM LINE WILL BE SCHEDULED FOR RFO22. (completed pre RFO 22)

E1.11	VENT SYSTEM BAY 8 (VENT LINE ASSEMBLY, VACUUM BREAKER LINES, AND VENT HEADER IN BAY 8 AND BAY 9)	GV	100%	THE VENT LINE WAS COMPLETED FROM THE INTERNAL SURFACE RFO21. THE VACUUM BREAKER LINES WERE COMPLETED FROM THE EXTERNAL SURFACE TO THE PENETRATION 203 ELBOW THEN FROM THE INSIDE FROM THE 203 PENETRATION TO THE ELBOW VERTICAL WELD. THE EXTERNAL SURFACE OF THE VENT HEADER AND INTERNAL AND EXTERNAL SURFACES OF THE DOWNCOMERS WHERE COMPLETED RFO20. THE VENT HEADER INTERIOR, VENT LINE EXTERIOR, AND THE REMAINDER OF THE VACUUM LINE WILL BE SCHEDULED FOR RFO22. (completed pre RFO 22)
E1.11	VENT SYSTEM BAY 10 (VENT LINE ASSEMBLY, VACUUM BREAKER LINES, AND VENT HEADER IN BAY 10 AND BAY 11)	GV	100%	THE VENT LINE WAS COMPLETED FROM THE INTERNAL SURFACE RFO21. THE VACUUM BREAKER LINES WERE COMPLETED FROM THE EXTERNAL SURFACE TO THE PENETRATION 203 ELBOW THEN FROM THE INSIDE FROM THE 203 PENETRATION TO THE ELBOW VERTICAL WELD. THE EXTERNAL SURFACE OF THE VENT HEADER AND INTERNAL AND EXTERNAL SURFACES OF THE DOWNCOMERS WHERE COMPLETED RFO20. THE VENT HEADER INTERIOR, VENT LINE EXTERIOR, AND THE REMAINDER OF THE VACUUM LINE WILL BE SCHEDULED FOR RFO22. (completed pre RFO 22)
E1.11	VENT SYSTEM BAY 12 (VENT LINE ASSEMBLY, VACUUM BREAKER LINES, AND VENT HEADER IN BAY 12 AND BAY 13)	GV	100%	THE VENT LINE WAS COMPLETED FROM THE INTERNAL SURFACE RFO21. THE VACUUM BREAKER LINES WERE COMPLETED FROM THE EXTERNAL SURFACE TO THE PENETRATION 203 ELBOW THEN FROM THE INSIDE FROM THE 203 PENETRATION TO THE ELBOW VERTICAL WELD. THE EXTERNAL SURFACE OF THE VENT HEADER AND INTERNAL AND EXTERNAL SURFACES OF THE DOWNCOMERS WHERE COMPLETED RFO20. THE VENT HEADER INTERIOR, VENT LINE EXTERIOR, AND THE REMAINDER OF THE VACUUM LINE WILL BE SCHEDULED FOR RFO22. (completed pre RFO 22)
E1.11	VENT SYSTEM BAY 14 (VENT LINE ASSEMBLY, VACUUM BREAKER LINES, AND VENT HEADER IN BAY 14 AND BAY 15)	GV	100%	THE VENT LINE WAS COMPLETED FROM THE INTERNAL SURFACE RFO21. THE VACUUM BREAKER LINES WERE COMPLETED FROM THE EXTERNAL SURFACE TO THE PENETRATION 203 ELBOW THEN FROM THE INSIDE FROM THE 203 PENETRATION TO THE ELBOW VERTICAL WELD. THE EXTERNAL SURFACE OF THE VENT HEADER AND INTERNAL AND EXTERNAL SURFACES OF THE DOWNCOMERS WHERE COMPLETED RFO20. THE VENT HEADER INTERIOR, VENT LINE EXTERIOR, AND THE REMAINDER OF THE VACUUM LINE WILL BE SCHEDULED FOR RFO22(completed pre RFO 22)
E1.11	VENT SYSTEM BAY 16 (VENT LINE ASSEMBLY, VACUUM BREAKER LINES, AND VENT HEADER IN BAY 16 AND BAY 1)	GV	100%	THE VENT LINE WAS COMPLETED FROM THE INTERNAL SURFACE RFO21. THE VACUUM BREAKER LINES WERE COMPLETED FROM THE EXTERNAL SURFACE TO THE PENETRATION 203 ELBOW THEN FROM THE INSIDE FROM THE 203 PENETRATION TO THE ELBOW VERTICAL WELD. THE EXTERNAL SURFACE OF THE VENT HEADER AND INTERNAL AND EXTERNAL SURFACES OF THE DOWNCOMERS WHERE COMPLETED RFO20. THE VENT HEADER INTERIOR, VENT LINE EXTERIOR, AND THE REMAINDER OF THE VACUUM LINE WILL BE SCHEDULED FOR RFO22. (completed pre RFO 22)
CONTAINMENT SURFACES (TORUS PENETRATIONS)				ASME SECTION XI EXAM. CATEGORY: E-A
E1.11	Torus Penetration X-200A & B	GV	100%	COMPLETE INTERNAL AND EXTERNAL
E1.12		VT-3	100%	COMPLETE FROM EXTERNAL RFO21
E1.11	Torus Penetration X-201A THRU H	GV	100%	COMPLETE FROM INTERNAL RFO21 EXTERNAL TO BE SCHEDULED BEFORE OR DURING RFO22(completed pre RFO 22)

E1.11	Torus Penetration X-202A THRU F	GV	100%	COMPLETE FROM INTERNAL AND EXTERNAL RFO21
E1.11	Torus Penetration X-202G THRU K	GV	100%	COMPLETE FROM INTERNAL AND EXTERNAL RFO21
E1.11	Torus Penetration X-203A THRU F	GV	100%	COMPLETE FROM INTERNAL RFO21 EXTERNAL TO BE SCHEDULED BEFORE OR DURING RFO22(completed pre RFO 22)
E1.11	Torus Penetration X-203G THRU H	GV	100%	COMPLETE FROM INTERNAL RFO21 EXTERNAL TO BE SCHEDULED BEFORE OR DURING RFO22 (completed pre RFO 22)
E1.11	Torus Penetration X-205	GV	100%	COMPLETE FROM INTERNAL AND EXTERNAL RFO21
E1.11	Torus Penetration X-206A THRU D	GV	100%	A & D COMPLETED FROM INTERNAL RFO21 (B&C ARE BELOW WATER LINE FOR INTERNAL) B & C COMPLETED FROM EXTERNAL RFO21 A & D EXTERNAL RESCHEDULE FOR RFO22(completed pre RFO 22)
E1.12		VT-3	100%	B & C COMPLETED FROM EXTERNAL RFO21
E1.11	Torus Penetration X-206E THRU F	GV	100%	COMPLETE FROM EXTERNAL RFO21 (UNDERWATER)
E1.12		VT-3	100%	COMPLETE FROM EXTERNAL RFO21
E1.11	Torus Penetration X-207A THRU H	GV	100%	COMPLETE FROM EXTERNAL RFO21 INTERNAL TO BE RESCHEDULED FOR RFO22(completed RFO 22 IDR 01-08 generated and discrepancy accepted)
E1.11	Torus Penetration X-208A THRU D	GV	100%	COMPLETE FROM INTERNAL AND EXTERNAL RFO21
E1.11	Torus Penetration X-209A THRU D	GV	100%	A & D COMPLETED FROM INTERNAL RFO21 (B&C ARE BELOW WATER LINE FOR INTERNAL) B & C COMPLETED FROM EXTERNAL RFO21 A&D RESCHEDULE FOR RFO22(completed pre RFO 22)
E1.11	Torus Penetration X-210A & B	GV	100%	COMPLETE FROM INTERNAL AND EXTERNAL RFO21
E1.11	Torus Penetration X-211A & B	GV	100%	COMPLETE FROM INTERNAL AND EXTERNAL RFO21
E1.11	Torus Penetration X-212	GV	100%	COMPLETE FROM INTERNAL AND EXTERNAL RFO21
E1.11	Torus Penetration X-213A & B	GV	100%	COMPLETE FROM EXTERNAL RFO21 (UNDER WATER)
E1.12		VT-3	100%	COMPLETE FROM EXTERNAL RFO21 (UNDER WATER)
E1.11	Torus Penetration X-214	GV	100%	COMPLETE FROM INTERNAL AND EXTERNAL RFO21
E1.11	Torus Penetration X-215	GV	100%	COMPLETE FROM INTERNAL AND EXTERNAL RFO21
E1.11	Torus Penetration X-216	GV	100%	COMPLETE FROM INTERNAL AND EXTERNAL RFO21
E1.11	Torus Penetration X-217	GV	100%	COMPLETE FROM INTERNAL AND EXTERNAL RFO21
E1.11	Torus Penetration X-218	GV	100%	COMPLETE FROM INTERNAL AND EXTERNAL RFO21

E1.11	Torus Penetration X-219	GV	100%	COMPLETE FROM INTERNAL AND EXTERNAL RFO21
E1.11	Torus Penetration X-220	GV	100%	COMPLETE FROM INTERNAL AND EXTERNAL RFO21
E1.11	Torus Penetration X-221	GV	100%	COMPLETE FROM INTERNAL AND EXTERNAL RFO21
E1.11	Torus Penetration X-222	GV	100%	COMPLETE FROM INTERNAL AND EXTERNAL RFO21
E1.11	Torus Penetration X-223	GV	100%	COMPLETE FROM INTERNAL AND EXTERNAL RFO21
E1.11	Torus Penetration X-224A & B	GV	100%	COMPLETE FROM EXTERNAL RFO21
				INSULATION PREVENTING INSPECTION FROM EXTERNAL, INTERNAL UNDER WATER. THIS WILL BE RESCHEDULED WHEN DIVERS ARE IN TORUS OR TORUS HAS BEEN DRAINED ALONG WITH THE UNDERWATER SURFACES.
E1.11	Torus Penetration X-225	GV	100%	COMPLETE FROM EXTERNAL RFO21 (UNDER WATER)
E1.12		VT-3	100%	COMPLETE FROM EXTERNAL RFO21 (UNDER WATER)
E1.11	Torus Penetration X-226A & B	GV	100%	COMPLETE FROM EXTERNAL RFO21 (UNDER WATER)
E1.12		VT-3	100%	COMPLETE FROM EXTERNAL RFO21 (UNDER WATER)
E1.11	Torus Penetration X-227	GV	100%	COMPLETE FROM EXTERNAL RFO21 (UNDER WATER)
E1.12		VT-3	100%	COMPLETE FROM EXTERNAL RFO21 (UNDER WATER)
E1.11	Torus Penetration X-228	GV	100%	COMPLETED FROM EXTERIOR RFO21 (NOT ACCESSIBLE FROM INTERIOR)
E1.11	Torus Penetration X-229	GV	100%	COMPLETED FROM EXTERIOR RFO21 (NOT ACCESSIBLE FROM INTERIOR)
E1.11	Torus Penetration X-230	GV	100%	COMPLETED FROM EXTERIOR RFO21
E1.11	Torus Penetration X-231 A-H	GV	100%	A,C,E, &G COMPLETED FROM INTERIOR RFO21 (B,D,F &H ARE UNDER WATER FROM INTERNAL) B,D,F,G & H COMPLETED FROM EXTERNAL RFO21 RESCHEDULE A,C, & E FOR RFO22(completed pre RFO 22)
CONTAINMENT SURFACES (DRYWELL SURFACES)				ASME SECTION XI EXAM. CATEGORY: E-A
E1.11	Drywell elevation 238 to elevation 251 quadrant 0 to 90 degrees	GV	100%	COMPLETED FROM INTERNAL RFO21 EXTERNAL INACCESSIBLE BY DESIGN
E1.12		VT-3	100%	COMPLETED FROM INTERNAL RFO21 EXTERNAL INACCESSIBLE BY DESIGN
E1.11	Drywell elevation 238 to elevation 251 quadrant 90 to 180 degrees	GV	100%	COMPLETED FROM INTERNAL RFO21 EXTERNAL INACCESSIBLE BY DESIGN
E1.12		VT-3	100%	COMPLETED FROM INTERNAL RFO21 EXTERNAL INACCESSIBLE BY DESIGN
E1.11	Drywell elevation 238 to elevation 251 quadrant 180 to 270 degrees	GV	100%	COMPLETED FROM INTERNAL RFO21 EXTERNAL INACCESSIBLE BY DESIGN

E1.12		VT-3	100%	COMPLETED FROM INTERNAL RFO21 EXTERNAL INACCESSIBLE BY DESIGN
E1.11	Drywell elevation 238 to elevation 251 quadrant 270 to 360 degrees	GV	100%	COMPLETED FROM INTERNAL RFO21 EXTERNAL INACCESSIBLE BY DESIGN
E1.12		VT-3	100%	COMPLETED FROM INTERNAL RFO21 EXTERNAL INACCESSIBLE BY DESIGN
E1.11	Drywell elevation 251 to elevation 269 quadrant 0 to 90 degrees	GV	100%	COMPLETED FROM INTERNAL RFO21 EXTERNAL INACCESSIBLE BY DESIGN
E1.12		VT-3	100%	COMPLETED FROM INTERNAL RFO21 EXTERNAL INACCESSIBLE BY DESIGN
E1.11	Drywell elevation 251 to elevation 269 quadrant 90 to 180 degrees	GV	100%	COMPLETED FROM INTERNAL RFO21 EXTERNAL INACCESSIBLE BY DESIGN
E1.11	Drywell elevation 251 to elevation 269 quadrant 180 to 270 degrees	GV	100%	COMPLETED FROM INTERNAL RFO21 EXTERNAL INACCESSIBLE BY DESIGN
E1.11	Drywell elevation 251 to elevation 269 quadrant 270 to 360 degrees	GV	100%	COMPLETED FROM INTERNAL RFO21 EXTERNAL INACCESSIBLE BY DESIGN
E1.11	Drywell elevation 269 to elevation 321 quadrant 0 to 90 degrees	GV	100%	COMPLETED FROM INTERNAL RFO21 EXTERNAL INACCESSIBLE BY DESIGN
E1.11	Drywell elevation 269 to elevation 321 quadrant 90 to 180 degrees	GV	100%	COMPLETED FROM INTERNAL RFO21 EXTERNAL INACCESSIBLE BY DESIGN
E1.11	Drywell elevation 269 to elevation 321 quadrant 180 to 270 degrees	GV	100%	COMPLETED FROM INTERNAL RFO21 EXTERNAL INACCESSIBLE BY DESIGN
E1.11	Drywell elevation 269 to elevation 321 quadrant 270 to 360 degrees	GV	100%	COMPLETED FROM INTERNAL RFO21 EXTERNAL INACCESSIBLE BY DESIGN
E1.11	Drywell Head interior surfaces and Drywell flanges	GV	100%	COMPLETED RFO21
E1.11	Drywell Head exterior surfaces	GV	100%	COMPLETED RFO21
CONTAINMENT SURFACES (DRYWELL PENETRATIONS)				
E1.11	Drywell Penetration X-1	GV	100%	COMPLETED INTERNAL AND EXTERNAL RFO21 PORTIONS OF THE EXTERNAL AREA ARE INACCESSIBLE FROM DIRECT VISUAL EXAMINATION BY DESIGN
E1.11	Drywell Penetration X-2	GV	100%	COMPLETED INTERNAL AND EXTERNAL RFO21 PORTIONS OF THE EXTERNAL AREA ARE INACCESSIBLE FROM DIRECT VISUAL EXAMINATION BY DESIGN

E1.11	Drywell Penetration X-4	GV	100%	COMPLETED INTERNAL AND EXTERNAL RFO21
E1.11	Drywell Penetration X-5A THRU X-5H	GV	100%	COMPLETED INTERNAL RFO21 EXTERNAL TO BE COMPLETED BEFORE OR DURING RFO22(completed pre RFO 22)
E1.12		VT-3		COMPLETED FROM THE INTERNAL SURFACE RFO21
E1.11	Drywell Penetration X-6	GV	100%	COMPLETED FROM INTERIOR RFO21 RESCHEDULE EXTERIOR BEFORE OR DURING RFO22(completed pre RFO 22)
E1.11	Drywell Penetration X-7A	GV	100%	COMPLETED FROM INTERNAL RFO21 EXTERNAL TO BE SCHEDULED BEFORE OR DURING RFO22(completed RFO 22)
E1.11	Drywell Penetration X-7B	GV	100%	COMPLETED FROM INTERNAL RFO21 EXTERNAL TO BE SCHEDULED BEFORE OR DURING RFO22(completed RFO 22)
E1.11	Drywell Penetration X-7C	GV	100%	COMPLETED FROM INTERNAL RFO21 EXTERNAL TO BE SCHEDULED BEFORE OR DURING RFO22(completed RFO 22)
E1.11	Drywell Penetration X-7D	GV	100%	COMPLETED FROM INTERNAL RFO21 EXTERNAL TO BE SCHEDULED BEFORE OR DURING RFO22(completed RFO 22)
E1.11	Drywell Penetration X-8	GV	100%	COMPLETED FROM INTERNAL RFO21 EXTERNAL TO BE SCHEDULED BEFORE OR DURING RFO22(completed pre RFO 22)
E1.12		VT-3	100%	COMPLETED FROM INTERNAL RFO21
E1.11	Drywell Penetration X-9A	GV	100%	COMPLETED FROM INTERNAL RFO21 EXTERNAL TO BE SCHEDULED BEFORE OR DURING RFO22(completed RFO 22)
E1.11	Drywell Penetration X-9B	GV	100%	COMPLETED FROM INTERNAL RFO21 EXTERNAL TO BE SCHEDULED BEFORE OR DURING RFO22(completed RFO 22)
E1.11	Drywell Penetration X-10	GV	100%	RESCHEDULE FOR RFO22 (completed RFO 22) External surface insulated restricting access for GV Exam. Normal internal surface has limited view from existing vantage points
E1.11	Drywell Penetration X-11	GV	100%	RESCHEDULE FOR RFO22 (completed RFO 22) External surface insulated restricting access for GV Exam. Normal internal surface has limited view from existing vantage points
E1.11	Drywell Penetration X-12	GV	100%	COMPLETED FROM INTERNAL RFO21 (INACCESSIBLE AREA IDENTIFIED) EXTERNAL TO BE SCHEDULED BEFORE OR DURING RFO22(completed pre RFO 22)

E1.11	Drywell Penetration X-13A	GV	100%	COMPLETED FROM INTERNAL RFO21 EXTERNAL TO BE SCHEDULED BEFORE OR DURING RFO22 (completed pre RFO 22)
E1.11	Drywell Penetration X-13B	GV	100%	COMPLETED FROM INTERNAL RFO21 EXTERNAL TO BE SCHEDULED BEFORE OR DURING RFO22 (completed pre RFO 22)
E1.11	Drywell Penetration X-14	GV	100%	THIS PENETRATION IS NOT ACCESSIBLE FOR GV EXAM OF INTERNAL SURFACE. REVIEW FOR RFO22 (completed RFO 22)
E1.11	Drywell Penetration X-15	GV	100%	THIS PENETRATION IS NOT ACCESSIBLE FOR GV EXAM OF INTERNAL SURFACE. (completed RFO 22)
E1.11	Drywell Penetration X-16A	GV	100%	THIS PENETRATION IS NOT ACCESSIBLE FOR GV EXAM OF INTERNAL SURFACE. (completed RFO 22)
E1.11	Drywell Penetration X-16B	GV	100%	THIS PENETRATION IS NOT ACCESSIBLE FOR GV EXAM OF INTERNAL SURFACE. (completed RFO 22)
E1.11	Drywell Penetration X-17	GV	100%	COMPLETED FROM INTERNAL RFO21 EXTERNAL TO BE SCHEDULED BEFORE OR DURING RFO22 (completed pre RFO 22)
E1.11	Drywell Penetration X-18	GV	100%	COMPLETED FROM INTERNAL RFO21 EXTERNAL TO BE SCHEDULED BEFORE OR DURING RFO22 (completed pre RFO 22)
E1.11	Drywell Penetration X-19	GV	100%	COMPLETED FROM INTERNAL RFO21 EXTERNAL TO BE SCHEDULED BEFORE OR DURING RFO22 (completed RFO 22)
E1.11	Drywell Penetration X-20	GV	100%	COMPLETED FROM INTERNAL RFO21 EXTERNAL TO BE SCHEDULED BEFORE OR DURING RFO22(completed pre RFO 22)
E1.11	Drywell Penetration X-21	GV	100%	COMPLETED FROM INTERNAL RFO21 EXTERNAL TO BE SCHEDULED BEFORE OR DURING RFO22(completed pre RFO 22)
E1.11	Drywell Penetration X-22	GV	100%	COMPLETED FROM INTERNAL RFO21 EXTERNAL TO BE SCHEDULED BEFORE OR DURING RFO22(completed pre RFO 22)
E1.11	Drywell Penetration X-23	GV	100%	INSULATION PREVENTS ACCESS FOR GV EXAM FROM INTERNAL SURFACE. (completed RFO 22)
E1.11	Drywell Penetration X-24	GV	100%	INSULATION PREVENTS ACCESS FOR GV EXAM FROM INTERNAL SURFACE (completed RFO 22)
E1.11	Drywell Penetration X-25	GV	100%	COMPLETED FROM INTERNAL RFO21 EXTERNAL TO BE SCHEDULED BEFORE OR DURING RFO22(completed pre RFO 22)
E1.11	Drywell Penetration X-26	GV	100%	COMPLETED FROM INTERNAL RFO21 EXTERNAL TO BE SCHEDULED BEFORE OR DURING RFO22 (completed pre RFO 22)

E1.12		VT-3	100%	COMPLETED FROM INTERNAL RFO21
E1.11	Drywell Penetration X-27	GV	100%	COMPLETED FROM INTERNAL RFO21 EXTERNAL TO BE SCHEDULED BEFORE OR DURING RFO22 (completed RFO 22)
E1.11	Drywell Penetration X-28	GV	100%	COMPLETED FROM INTERNAL RFO21 EXTERNAL TO BE SCHEDULED BEFORE OR DURING RFO22 (completed RFO 22)
E1.11	Drywell Penetration X-29	GV	100%	RESCHEDULE FOR RFO22 INTERNAL SURFACE NOT SAFELY ACCESSIBLE FOR GV EXAMINATION (completed RFO 22)
E1.11	Drywell Penetration X-30	GV	100%	COMPLETED FROM INTERNAL RFO21 EXTERNAL TO BE SCHEDULED BEFORE OR DURING RFO22 (completed pre RFO 22)
E1.12		VT-3	100%	COMPLETED FROM INTERNAL RFO21
E1.11	Drywell Penetration X-31	GV	100%	COMPLETED FROM INTERNAL RFO21 EXTERNAL TO BE SCHEDULED BEFORE OR DURING RFO22 (completed pre RFO 22)
E1.12		VT-3	100%	COMPLETED FROM INTERNAL RFO21
E1.11	Drywell Penetration X-32	GV	100%	COMPLETED FROM INTERNAL RFO21 EXTERNAL TO BE SCHEDULED BEFORE OR DURING RFO22 (completed pre RFO 22)
E1.12		VT-3	100%	COMPLETED FROM INTERNAL RFO21
E1.11	Drywell Penetration X-33	GV	100%	COMPLETED FROM INTERNAL RFO21 EXTERNAL TO BE SCHEDULED BEFORE OR DURING RFO22 (completed pre RFO 22)
E1.11	Drywell Penetration X-34	GV	100%	RESCHEDULE FOR RFO22 (completed pre RFO 22)
E1.11	Drywell Penetration X-35A	GV	100%	COMPLETED FROM INTERNAL AND EXTERNAL RFO21 THIS PENETRATION IS PARTIALLY ACCESSIBLE FOR GV EXAM
E1.12		VT-3	100%	COMPLETED FROM INTERNAL RFO21
E1.11	Drywell Penetration X-35B	GV	100%	COMPLETED FROM INTERNAL AND EXTERNAL RFO21 THIS PENETRATION IS PARTIALLY ACCESSIBLE FOR GV EXAM
E1.12		VT-3	100%	COMPLETED FROM INTERNAL RFO21
E1.11	Drywell Penetration X-35C	GV	100%	COMPLETED FROM INTERNAL AND EXTERNAL RFO21 THIS PENETRATION IS PARTIALLY ACCESSIBLE FOR GV EXAM
E1.12		VT-3	100%	COMPLETED FROM INTERNAL RFO21
E1.11	Drywell Penetration X-35D	GV	100%	COMPLETED FROM INTERNAL AND EXTERNAL RFO21 THIS PENETRATION IS PARTIALLY ACCESSIBLE FOR GV EXAM
E1.12		VT-3	100%	COMPLETED FROM INTERNAL RFO21
E1.11	Drywell Penetration X-35E	GV	100%	COMPLETED FROM INTERNAL AND EXTERNAL RFO21 THIS PENETRATION IS PARTIALLY ACCESSIBLE FOR GV EXAM

E1.12		VT-3	100%	COMPLETED FROM INTERNAL RFO21
E1.11	Drywell Penetration X-36	GV	100%	COMPLETED FROM INTERNAL RFO21 EXTERNAL TO BE SCHEDULED BEFORE OR DURING RFO22 (completed pre RFO 22) THIS PENETRATION IS NOT SAFELY ACCESSIBLE FOR GV EXAM.
E1.11	Drywell Penetration X-37A	GV	100%	COMPLETED FROM INTERNAL RFO21 EXTERNAL TO BE SCHEDULED BEFORE OR DURING RFO22 (completed pre RFO 22) THIS PENETRATION IS NOT ACCESSIBLE FOR GV EXAM DUE TO PROXIMITY OF PIPES TO EACH OTHER AND THE MINIMAL CLEARANCES BETWEEN THE CRD PIPING AND THE CONCRETE SLEEVES.
E1.11	Drywell Penetration X-37B	GV	100%	COMPLETED FROM INTERNAL RFO21 EXTERNAL TO BE SCHEDULED BEFORE OR DURING RFO22 (completed pre RFO 22) THIS PENETRATION IS NOT ACCESSIBLE FOR GV EXAM DUE TO PROXIMITY OF PIPES TO EACH OTHER AND THE MINIMAL CLEARANCES BETWEEN THE CRD PIPING AND THE CONCRETE SLEEVES.
E1.11	Drywell Penetration X-37C	GV	100%	COMPLETED FROM INTERNAL RFO21 EXTERNAL TO BE SCHEDULED BEFORE OR DURING RFO22 (completed pre RFO 22) THIS PENETRATION IS NOT ACCESSIBLE FOR GV EXAM DUE TO PROXIMITY OF PIPES TO EACH OTHER AND THE MINIMAL CLEARANCES BETWEEN THE CRD PIPING AND THE CONCRETE SLEEVES.
E1.11	Drywell Penetration X-37D	GV	100%	COMPLETED FROM INTERNAL RFO21 EXTERNAL TO BE SCHEDULED BEFORE OR DURING RFO22 (completed pre RFO 22) THIS PENETRATION IS NOT ACCESSIBLE FOR GV EXAM DUE TO PROXIMITY OF PIPES TO EACH OTHER AND THE MINIMAL CLEARANCES BETWEEN THE CRD PIPING AND THE CONCRETE SLEEVES.
E1.11	Drywell Penetration X-38A	GV	100%	COMPLETED FROM INTERNAL RFO21 EXTERNAL TO BE SCHEDULED BEFORE OR DURING RFO22 (completed pre RFO 22) THIS PENETRATION IS NOT ACCESSIBLE FOR GV EXAM DUE TO PROXIMITY OF PIPES TO EACH OTHER AND THE MINIMAL CLEARANCES BETWEEN THE CRD PIPING AND THE CONCRETE SLEEVES.
E1.11	Drywell Penetration X-38B	GV	100%	COMPLETED FROM INTERNAL RFO21 EXTERNAL TO BE SCHEDULED BEFORE OR DURING RFO22 *(completed pre RFO 22) THIS PENETRATION IS NOT ACCESSIBLE FOR GV EXAM DUE TO PROXIMITY OF PIPES TO EACH OTHER AND THE MINIMAL CLEARANCES BETWEEN THE CRD PIPING AND THE CONCRETE SLEEVES.
E1.11	Drywell Penetration X-38C	GV	100%	COMPLETED FROM INTERNAL RFO21 EXTERNAL TO BE SCHEDULED BEFORE OR DURING RFO22 (completed pre RFO 22) THIS PENETRATION IS NOT ACCESSIBLE FOR GV EXAM DUE TO PROXIMITY OF PIPES TO EACH OTHER AND THE MINIMAL CLEARANCES BETWEEN THE CRD PIPING AND THE CONCRETE SLEEVES.
E1.11	Drywell Penetration X-38D	GV	100%	COMPLETED FROM INTERNAL RFO21 EXTERNAL TO BE SCHEDULED BEFORE OR DURING RFO22 (completed pre RFO 22) THIS PENETRATION IS NOT ACCESSIBLE FOR GV EXAM DUE TO PROXIMITY OF PIPES TO EACH OTHER AND THE MINIMAL CLEARANCES BETWEEN THE CRD PIPING AND THE CONCRETE SLEEVES.
E1.11	Drywell Penetration X-39A	GV	100%	COMPLETED FROM INTERNAL RFO21 EXTERNAL TO BE SCHEDULED BEFORE OR DURING RFO22 (completed pre RFO 22) THIS PENETRATION IS INACCESSIBLE FOR GV EXAM OF EXTERNAL SURFACES DUE TO INSULATION

E1.11	Drywell Penetration X-39B	GV	100%	COMPLETED FROM INTERNAL RFO21 EXTERNAL TO BE SCHEDULED BEFORE OR DURING RFO22 (completed pre RFO 22)
E1.11	Drywell Penetration X-40A	GV	100%	COMPLETED FROM INTERNAL RFO21 EXTERNAL TO BE SCHEDULED BEFORE OR DURING RFO22 (completed pre RFO 22) THIS PENETRATION IS NOT SAFELY ACCESSIBLE FOR GV EXAM OF EXTERNAL SURFACE
E1.11	Drywell Penetration X-40B	GV	100%	COMPLETED FROM INTERNAL RFO21 EXTERNAL TO BE SCHEDULED BEFORE OR DURING RFO22 (completed pre RFO 22) THIS PENETRATION IS NOT SAFELY ACCESSIBLE FOR GV EXAM OF EXTERNAL SURFACE
E1.11	Drywell Penetration X-40C	GV	100%	COMPLETED FROM INTERNAL RFO21 EXTERNAL TO BE SCHEDULED BEFORE OR DURING RFO22 (completed pre RFO 22)THIS PENETRATION IS NOT SAFELY ACCESSIBLE FOR GV EXAM OF EXTERNAL SURFACE
E1.11	Drywell Penetration X-40D	GV	100%	COMPLETED FROM INTERNAL RFO21 EXTERNAL TO BE SCHEDULED BEFORE OR DURING RFO22 (completed pre RFO 22) THIS PENETRATION IS NOT SAFELY ACCESSIBLE FOR GV EXAM OF EXTERNAL SURFACE
E1.11	Drywell Penetration X-41	GV	100%	RESCHEDULE FOR RFO22 (completed RFO 22) THE INTERNAL SURFACE OF THIS PENETRATION IS NOT SAFELY ACCESSIBLE FOR GV EXAM
E1.11	Drywell Penetration X-42	GV	100%	COMPLETED FROM INTERNAL RFO21 EXTERNAL TO BE SCHEDULED BEFORE OR DURING RFO22 (completed pre RFO 22)
E1.11	Drywell Penetration X-43	GV	100%	COMPLETED FROM INTERNAL RFO21 EXTERNAL TO BE SCHEDULED BEFORE OR DURING RFO22 (completed RFO 22) THE EXTERNAL SURFACE OF THIS PENETRATION IS NOT SAFELY ACCESSIBLE FOR GV EXAM
E1.11	Drywell Penetration X-44	GV	100%	COMPLETED FROM INTERNAL RFO21 EXTERNAL TO BE SCHEDULED BEFORE OR DURING RFO22 (completed RFO 22) THE EXTERNAL SURFACE OF THIS PENETRATION IS NOT SAFELY ACCESSIBLE FOR GV EXAM
E1.11	Drywell Penetration X-45	GV	100%	COMPLETED FROM INTERNAL RFO21 EXTERNAL TO BE SCHEDULED BEFORE OR DURING RFO22 (completed pre RFO 22)
E1.11	Drywell Penetration X-46	GV	100%	COMPLETED FROM INTERNAL RFO21 EXTERNAL TO BE SCHEDULED BEFORE OR DURING RFO22 (completed RFO 22) THE EXTERNAL SURFACE OF THIS PENETRATION IS NOT SAFELY ACCESSIBLE FOR GV EXAM
E1.11	Drywell Penetration X-47	GV	100%	RESCHEDULE FOR RFO22(completed RFO 22) THE INTERNAL SURFACE OF THIS PENETRATION IS NOT SAFELY ACCESSIBLE FOR GV EXAM
E1.11	Drywell Penetration X-48	GV	100%	COMPLETED FROM INTERNAL RFO21 EXTERNAL TO BE SCHEDULED BEFORE OR DURING RFO22 (completed pre RFO 22)
E1.11	Drywell Penetration X-49	GV	100%	COMPLETED FROM INTERNAL RFO21 EXTERNAL TO BE SCHEDULED BEFORE OR DURING RFO22 (completed pre RFO 22)
E1.11	Drywell Penetration X-50	GV	100%	COMPLETED FROM INTERNAL RFO21 EXTERNAL TO BE SCHEDULED BEFORE OR DURING RFO22 (completed pre RFO 22)

E1.11	Drywell Penetration X-51	GV	100%	COMPLETED FROM INTERNAL RFO21 EXTERNAL TO BE SCHEDULED BEFORE OR DURING RFO22 (completed pre RFO 22)
E1.11	Drywell Penetration X-52	GV	100%	COMPLETED FROM INTERNAL RFO21 EXTERNAL TO BE SCHEDULED BEFORE OR DURING RFO22 (completed pre RFO 22)
E1.11	Drywell Penetration X-100A	GV	100%	COMPLETED FROM INTERNAL RFO21 (INACCESSIBLE AREA IDENTIFIED) EXTERNAL TO BE SCHEDULED BEFORE OR DURING RFO22 (completed pre RFO 22)
E1.11	Drywell Penetration X-100B	GV	100%	COMPLETED FROM INTERNAL RFO21 (INACCESSIBLE AREA IDENTIFIED) EXTERNAL TO BE SCHEDULED BEFORE OR DURING RFO22 (completed pre RFO 22)
E1.11	Drywell Penetration X-100C	GV	100%	COMPLETED FROM INTERNAL RFO21 (INACCESSIBLE AREA IDENTIFIED) EXTERNAL TO BE SCHEDULED BEFORE OR DURING RFO22 (completed pre RFO 22)
E1.11	Drywell Penetration X-100D	GV	100%	COMPLETED FROM INTERNAL RFO21 (INACCESSIBLE AREA IDENTIFIED) EXTERNAL TO BE SCHEDULED BEFORE OR DURING RFO22 (completed pre RFO 22)
E1.11	Drywell Penetration X-101A	GV	100%	COMPLETED FROM INTERNAL RFO21 (INACCESSIBLE AREA IDENTIFIED) EXTERNAL TO BE SCHEDULED BEFORE OR DURING RFO22 (completed pre RFO 22)
E1.11	Drywell Penetration X-101B	GV	100%	COMPLETED FROM INTERNAL RFO21 (INACCESSIBLE AREA IDENTIFIED) EXTERNAL TO BE SCHEDULED BEFORE OR DURING RFO22 (completed pre RFO 22)
E1.11	Drywell Penetration X-101C	GV	100%	COMPLETED FROM INTERNAL RFO21 (INACCESSIBLE AREA IDENTIFIED) EXTERNAL TO BE SCHEDULED BEFORE OR DURING RFO22 (completed pre RFO 22)
E1.11	Drywell Penetration X-101D	GV	100%	COMPLETED FROM INTERNAL RFO21 (INACCESSIBLE AREA IDENTIFIED) EXTERNAL TO BE SCHEDULED BEFORE OR DURING RFO22 (completed pre RFO 22)
E1.11	Drywell Penetration X-102	GV	100%	COMPLETED FROM INTERNAL RFO21 (INACCESSIBLE AREA IDENTIFIED) EXTERNAL TO BE SCHEDULED BEFORE OR DURING RFO22 (completed pre RFO 22)
E1.11	Drywell Penetration X-103	GV	100%	COMPLETED FROM INTERNAL RFO21 (INACCESSIBLE AREA IDENTIFIED) EXTERNAL TO BE SCHEDULED BEFORE OR DURING RFO22 (completed pre RFO 22) EXTERNAL SURFACE OF THIS PENETRATION IS NOT ACCESSIBLE FOR EXAMINATION DUE TO DESIGN
E1.11	Drywell Penetration X-104A	GV	100%	COMPLETED FROM INTERNAL RFO21 (INACCESSIBLE AREA IDENTIFIED) EXTERNAL TO BE SCHEDULED BEFORE OR DURING RFO22 (completed pre RFO 22)

E1.11	Drywell Penetration X-104B	GV	100%	COMPLETED FROM INTERNAL RFO21 (INACCESSIBLE AREA IDENTIFIED) EXTERNAL TO BE SCHEDULED BEFORE OR DURING RFO22 (completed pre RFO 22)
E1.11	Drywell Penetration X-104C	GV	100%	COMPLETED FROM INTERNAL RFO21 (INACCESSIBLE AREA IDENTIFIED) EXTERNAL TO BE SCHEDULED BEFORE OR DURING RFO22 (completed pre RFO 22)
E1.11	Drywell Penetration X-105A	GV	100%	COMPLETED FROM INTERNAL RFO21 (INACCESSIBLE AREA IDENTIFIED) EXTERNAL TO BE SCHEDULED BEFORE OR DURING RFO22 (completed pre RFO 22)
E1.11	Drywell Penetration X-105B	GV	100%	COMPLETED FROM INTERNAL RFO21 (INACCESSIBLE AREA IDENTIFIED) EXTERNAL TO BE SCHEDULED BEFORE OR DURING RFO22 (completed pre RFO 22)
E1.11	Drywell Penetration X-105C	GV	100%	COMPLETED FROM INTERNAL RFO21 (INACCESSIBLE AREA IDENTIFIED) EXTERNAL TO BE SCHEDULED BEFORE OR DURING RFO22 (completed pre RFO 22)
E1.11	Drywell Penetration X-105D	GV	100%	COMPLETED FROM INTERNAL RFO21 (INACCESSIBLE AREA IDENTIFIED) EXTERNAL TO BE SCHEDULED BEFORE OR DURING RFO22 (completed pre RFO 22)
E1.11	Drywell Penetration X-106	GV	100%	COMPLETED FROM INTERNAL RFO21 EXTERNAL TO BE SCHEDULED BEFORE OR DURING RFO22 (completed pre RFO 22)
E1.11	Drywell Penetration X-107	GV	100%	COMPLETED FROM INTERNAL RFO21 EXTERNAL TO BE SCHEDULED BEFORE OR DURING RFO22 (completed pre RFO 22)

CONTAINMENT SEALS, GASKETS, AND MOISTURE BARRIERS				ASME SECTION XI EXAM. CATEGORY: E-D
ASME SECTION XI ITEM NO.	ISI IDENTIFICATION NO./DESCRIPTION	Exam	% COMPLETE TO DATE	REMARKS
E5.30	DRY WELL INTERIOR MOISTURE BARRIER	VT-3	100%	INSPECTION COMPLETED RFO21 DISCREPANCIES WERE IDENTIFIED AND DISPOSITION FOR *THIS ITEM IS WITH MECHANICAL DESIGN ENGINEERING*

CONTAINMENT SURFACES REQUIRING AUGMENTED EXAMINATION				ASME CLASS MC	ASME SECTION XI EXAM. CATEGORY: E-C
ASME SECTION XI ITEM NUMBER	ISI IDENTIFICATION NO./DESCRIPTION	Exam	% COMPLETE TO DATE	REMARKS	
E4.11	Drywell Interior Surface at the Moisture Barrier Interface	VT-1	100%	The area identified for augmented exam of the Drywell surface at the moisture barrier interface shall be from containment plate weld joint left of X-5B to the containment plate weld joint right of penetration X-5E and from the concrete metal interface up 1 foot. Complete RFO22	

E4.12	Drywell Interior Surface at the Moisture Barrier Interface	Volumetric	100%	The area identified for augmented exam of the Drywell surface at the moisture barrier interface shall be from containment plate weld joint left of X-5B to the containment plate weld joint right of penetration X-5E and from the concrete metal interface up 1 foot. Complete RFO22

CONTAINMENT PRESSURE RETAINING BOLTING				ASME SECTION XI EXAM. CATEGORY: E-G
ASME SECTION XI ITEM NO.	ISI IDENTIFICATION NO./DESCRIPTION	Exam	% COMPLETE TO DATE	REMARKS
E8.10	TORUS MANWAY FLANGE BOLTING PENETRATION 200A	VT-1	100%	RESCHEDULE FOR RFO22 (completed RFO 22)
E8.10	TORUS MANWAY FLANGE BOLTING PENETRATION 200B	VT-1	100%	RESCHEDULE FOR RFO22 (completed RFO 22)
E8.10	V16-19-5A-F	VT-1	100%	RFO22 INSTALLED
E8.10	V16-19-5G,H	VT-1	100%	RFO22 REMOVED

To: Dennis Girroir 12/02/1999

From: Ralph Connell

Re: Report for IWE Inspections Performed for RFO21

INTRODUCTION:

The objective in the current period for this new IWE inspection program was to gather as much information as we could for RFO21 and RFO22. During RFO21 the goal was to perform as many inspections as possible within the acceptable window without causing any interference with other outage work activities. The remainder of the required first period examinations will be scheduled for RFO22. An estimated 80% of the required first period examinations have been completed at the completion of RFO21.

DISCUSSION:

The ASME Section XI Subsection IWE Code requires an examination of the coated surfaces in order to determine the condition of the substrate. This examination of coated surfaces is for evidence of flaking, blistering, peeling, discoloration and other signs of distress. The IWE examinations performed for RFO21 found only two areas of coating with signs of distress affecting the substrate. Those two areas were located at the drywell interior moisture barrier and the other was on the drywell surface at the X-5G penetration. Both of these were evaluated by Mechanical Design Engineering and dispositions provided via the IDR process. At many areas of the drywell there is peeling or discoloration. Both of these issues have been previously identified and accepted via the OP5250 inspections.

The Maintenance Department has been performing containment inspections for several years via OP5250 to evaluate the condition of the coatings on containment surfaces. These inspections have compiled an excellent source of data documenting the conditions of the coatings and how these coatings are maintaining over time. The information provided from these reports provides the basis for disposition of issues identified on the IWE reports such as coating peeling and blistering. In all cases, except for the two areas specifically identified at the joint seal and the 5G-penetration area, the peeling and blistering coating is a condition that applies to the outer epoxy coating. The primer coat remains intact providing acceptable protection of the metal surfaces.

Several areas were identified as inaccessible during the RFO21 IWE examination process. These inspection reports shall be reviewed for detail and validity. After the review the program procedure will be revised to recognize the inaccessible areas in the program, PP7024.

There were fifteen examination reports rejected due to housekeeping concerns. One report was a VT-3 for X-206A external surface, eight for X-207A through H internal

surface, two for X-9A & B external surface, and four for X-7A through D external surface. All of these examinations shall be rescheduled for inspection before or during RFO22 after cleaning. There are also housekeeping issues on a portion of the external torus surface below the catwalk, which also require cleaning and reinspection.

DETAILS:

TORUS SURFACE

The torus inspections covered approximately 94% of the accessible surface for general visual examination. Underwater locations are considered inaccessible for general visual examination. The surface from just below the catwalk on the exterior surface to the horizontal mid point of the torus was not inspected. This surface requires cleaning before it can be properly examined. A work order request has been submitted to perform this cleaning. The remaining 6% of this surface can be inspected with the plant on line and should be completed prior to RFO22 if cleaning is performed.

The underwater surface areas were completed in RFO20 using VT-1 criteria. These inspections were performed prior to the formal development of the IWE program. In order to be conservative, VT-1 examinations were specified in anticipation of this area being classified as Category E-C "augmented examination". The review of the torus inspection data generated from 1998 revealed that during the twenty-five plus years of operation there were no significant areas of general corrosion/metal loss identified. Therefore it may be concluded that the interior surface of the torus is not subject to accelerated corrosion and no augmented examination are required at this time. The IWE program as written reflects this philosophy. This is not to say that the torus will never be classified as Category E-C, but that classification, if necessary, will be the result of finding areas that are subject to accelerated corrosion. The scheduled IWE examinations will provide regular examinations of the torus and that data will be evaluated for applicability to Category E-C. The result of performing VT-1 and UT examinations was that it provided excellent baseline data. The VT-1 examinations performed during RFO20 exceed the required IWE VT-3 examinations of the applicable surfaces.

IDR 99-07 provides the disposition for an area on torus bay 4 where metal was removed. This area on bay 4 appears to be from original construction and does not violate the minimum required thickness in this area or the code referenced 10%. This area is acceptable as is. Reference VYM 99/147 for the complete details of this evaluation.

VENT SYSTEM

The examinations required for the first period have completions of 80% for the general visual inspections and 100% for the scheduled VT-3 exams. The vent header external surface, downcomers internal and downcomers external surfaces were completed during RFO20 inspections using VT-1 examinations. The vent lines were completed during RFO21. The exterior of the vent lines outside the torus, the remainder of the vacuum breaker lines external surfaces and the vent header interior surface will be rescheduled for

general visual examination before or during RFO22. The remaining 20% of the required first period examinations will be rescheduled for RFO22.

IDR 99-06 was generated against nine rejected examination reports for cracks in the attachment clip tack welds that holds the vacuum breaker line bellows cover in place. The cracked welds for the vacuum breaker expansion joint cover attachment clips appeared to be a configuration issue as the cause. The short-term evaluation was basically use as is. An ER was also written for the issues addressed here, ER 99-1321, and will address the long-term corrective actions for the items identified within IDR 99-06. VYM 99/145 provides the details of this evaluation.

TORUS PENETRATIONS

Torus penetration (includes penetrations in the vent system) examinations completed 90% of the requirements for the first period. The areas remaining 10% of the penetrations to be examined were in the area of the torus requiring cleaning. These penetrations will be cleaned along with the torus surface and inspections should be completed prior to RFO22.

DRYWELL SURFACES

RFO21 examinations completed 100% of the accessible drywell surface. The outer surface of the drywell is inaccessible by design except for the drywell head, which is accessible from both sides. Except for paint issues which have been previously identified by OP5250 and found acceptable, the only other issues dealing with the containment surface is the corrosion identified on the containment surface at the 5G penetration and the corrosion of the containment surface in areas along the joint seal. The joint seal area corrosion is described in more detail under heading Containment Seals, Gaskets, and Moisture Barriers. In these two cases the paint was cracked and peeled. Investigation of these areas identified the corrosion in these areas.

In general, the paint peeling and flaking are the results of loss of paint film adhesion of the outercoat to the primer coat. Typically the primer coating under this peeling and flaking paint is in good condition and is tightly adhered to the base metal. The discoloration are the result of leakage and work activities from past events and work activities except those noted on IDR's for further engineering evaluations. The blistering identified in the coating is most likely the result of gases or liquids within or underneath the paint, which exert pressure greater than the adhesion or cohesion of the paint at the area under stress. If the rate of diffusion of the solvent vapor through the paint film is slower than the rate of formation of the vapor, blistering will occur. This would have occurred during the drying process shortly after the paint was originally applied. It is not unusual to find some of this type of condition in this paint system. This condition is a paint issue only and does not affect the base metal.

IDR 99-018 is for corrosion identified on the containment (drywell) surface in the area of the X-5G penetration. No significant wall loss is identified for this area. And no further

action is required. Reference VYM 99/139 for the complete details of this evaluation. This area shall be scheduled for cleanup and repainting during RFO22.

DRYWELL PENETRATIONS

Forty-three (43) percent of the required first period drywell penetration examinations were completed during RFO21. Many of these penetrations depicted debris and peeling paint in the examination reports. Follow up examinations of these penetrations performed by the Project Engineer Responsible Engineer revealed that the debris remaining in the penetrations consisted of an accumulation of dirt and peeled paint from approximately twenty-six years of operation. This debris is not considered to be detrimental to the containment structure. All penetration cavities were dry with no visible indication of moisture. The peeling paint was similar to that identified in the maintenance reports and is not unusual for the age and environmental conditions experienced by the coating. The remaining 57% of these penetrations shall be inspected prior to or during RFO22.

The debris identified in the drywell penetration cavities is a housekeeping issue only, not a containment integrity concern. All large debris located in the penetrations examined have been removed. The remaining debris consists of the accumulation of dirt, dust and paint chips over the life of the plant. The quantity of debris in the penetrations identified is not a containment integrity concern. All penetrations examined were dry with no indication of water. The penetrations typically have a small access and pose difficulty cleaning. The dilemma from inside the drywell is the accessibility to the penetrations and the ALARA concerns. A work order request has been originated to clean the external sleeves of the drywell penetrations. During this time we will attempt to develop an acceptable process to perform this task. If an acceptable process can be developed for the external sleeves we will investigate the possibility of cleaning the drywell internal sleeves on a case by case basis.

CONTAINMENT SEALS, GASKETS, AND MOISTURE BARRIERS

The entire drywell interior moisture barrier was inspected to the VT-3 criteria. This examination revealed cracked and peeling paint with areas of corrosion on the base metal in the seal area. The paint was cracked in the bottom of this area for 360 degrees. This area has an ER and IDR written against it.

There was one rejected report for the drywell interior moisture barrier. This report was the original VT-3 examination of this area. IDR 99-012 was generated against this report for the engineering evaluation. This IDR was evaluated by Mechanical Design Engineering and found to be adequate as is for structural concerns. Paint coating and seal repairs should be performed at the earliest opportunity. Event Report 99-1594 was written against this area. The disposition of this ER shall provide the details required to implement the repair. VYM 99/139 provides the details of this evaluation. It is the opinion of this author that the necessary repairs for this area should take place during

RFO22. The responsible department should be identified as early as possible as well as providing the necessary scope of work. The Project Engineering Responsible Engineer shall monitor the progress of this issue and provide regular reports to the Project Engineering Program Supervisor. This area shall be evaluated for the applicability of Category E-C augmented examination prior to the revision of procedure PP7024.

PRESSURE RETAINING BOLTING

No bolting was inspected for IWE for RFO21. All bolting originally scheduled for RFO21 will be review for the possibility of rescheduling to RFO22.

SUMMARY:

Although we did not complete all IWE first period examinations during RFO21, we did meet our original objective. That objective was to gather information regarding primary containment issues relating to the IWE program and to complete as many examinations as possible without impacting other outage work activities. An estimated 80% of IWE examinations are completed for the first period. The remaining 20% shall be rescheduled for RFO22 for examination or reexamination. Some of the areas to be examined will require additional coordination due to cleaning requirements or accessibility requirements to complete the examinations.

There were four new IDR's generated, per DP4027, for containment issues during RFO21. All of these issues were addressed by Mechanical Design Engineering prior to RFO21 startup.

Please find attached to this report for reference the Summary of First Period IWE Examinations for RFO21 and the maintenance 1999 Drywell Inspection Record. These reports provide detail for examinations completed and those required to be rescheduled for RFO22 and a summary of the OP5250 coating examinations.

11/23/1999 SUMMARY OF FIRST PERIOD IWE EXAMINATIONS FOR RFO21

CONTAINMENT SURFACES (TORUS BAYS)				ASME SECTION XI EXAM. CATEGORY: E-A
ASME SECTION XI ITEM N0.	ISI IDENTIFICATION NO./DESCRIPTION	EXAM	% COMPLETE TO DATE	REMARKS
E1.11	TORUS BAY 1	GV	94 %	Internal surface above water line completed RFO 21 External surface except area from catwalk down to belt line completed. Remaining area to be cleaned and inspected after S/U RFO21 Note: VT-1 completed below water line RFO20
E1.11	TORUS BAY 2	GV	94 %	Internal surface above water line completed RFO 21 External surface except area from catwalk down to belt line completed. Remaining area to be cleaned and inspected after S/U RFO21 Note: VT-1 completed below water line RFO20
E1.11	TORUS BAY 3	GV	94 %	Internal surface above water line completed RFO 21 External surface except area from catwalk down to belt line completed. Remaining area to be cleaned and inspected after S/U RFO21 Note: VT-1 completed below water line RFO20
E1.11	TORUS BAY 4	GV	94 %	Internal surface above water line completed RFO 21 External surface except area from catwalk down to belt line completed. Remaining area to be cleaned and inspected after S/U RFO21 Note: VT-1 completed below water line RFO20
E1.11	TORUS BAY 5	GV	94 %	Internal surface above water line completed RFO 21 External surface except area from catwalk down to belt line completed. Remaining area to be cleaned and inspected after S/U RFO21 Note: VT-1 completed below water line RFO20
E1.11	TORUS BAY 6	GV	94 %	Internal surface above water line completed RFO 21 External surface except area from catwalk down to belt line completed. Remaining area to be cleaned and inspected after S/U RFO21 Note: VT-1 completed below water line RFO20
E1.11	TORUS BAY 7	GV	94 %	Internal surface above water line completed RFO 21 External surface except area from catwalk down to belt line completed. Remaining area to be cleaned and inspected after S/U RFO21 Note: VT-1 completed below water line RFO20
E1.11	TORUS BAY 8	GV	94 %	Internal surface above water line completed RFO 21 External surface except area from catwalk down to belt line completed. Remaining area to be cleaned and inspected after S/U RFO21 Note: VT-1 completed below water line RFO20
E1.11	TORUS BAY 9	GV	94 %	Internal surface above water line completed RFO 21 External surface except area from catwalk down to belt line completed. Remaining area to be cleaned and inspected after S/U RFO21 Note: VT-1 completed below water line RFO20
E1.11	TORUS BAY 10	GV	94 %	Internal surface above water line completed RFO 21 External surface except area from catwalk down to belt line completed. Remaining area to be cleaned and inspected after S/U RFO21 Note: VT-1 completed below water line RFO20
E1.11	TORUS BAY 11	GV	94 %	Internal surface above water line completed RFO 21 External surface except area from catwalk down to belt line completed. Remaining area to be cleaned and inspected after S/U RFO21 Note: VT-1 completed below water line RFO20
E1.11	TORUS BAY 12	GV	94 %	Internal surface above water line completed RFO 21 External surface except area from catwalk down to belt line completed. Remaining area to be cleaned and inspected after S/U RFO21 Note: VT-1 completed below water line RFO20
E1.11	TORUS BAY 13	GV	94 %	Internal surface above water line completed RFO 21 External surface except area from catwalk down to belt line completed. Remaining area to be cleaned and inspected after S/U RFO21 Note: VT-1 completed below water line RFO20
E1.11	TORUS BAY 14	GV	94 %	Internal surface above water line completed RFO 21 External surface except area from catwalk down to belt line completed. Remaining area to be cleaned and inspected after S/U RFO21 Note: VT-1 completed below water line RFO20
E1.11	TORUS BAY 15	GV	94 %	Internal surface above water line completed RFO 21 External surface except area from catwalk down to belt line completed. Remaining area to be cleaned and inspected after S/U RFO21 Note: VT-1 completed below water line RFO20

E1.11	TORUS BAY 16	GV	94 %	Internal surface above water line completed RFO 21 External surface except area from catwalk down to belt line completed. Remaining area to be cleaned and inspected after S/U RFO21 Note: VT-1 completed below water line RFO20
ASME SECTION XI EXAM. CATEGORY: E-A				
E1.11	VENT SYSTEM BAY 2 (VENT LINE ASSEMBLY, VACUUM BREAKER LINES, AND VENT HEADER IN BAY 2 AND BAY 3)	GV	75%	THE VENT LINE WAS COMPLETED FROM THE INTERNAL SURFACE RFO21. THE VACUUM BREAKER LINES WERE COMPLETED FROM THE EXTERNAL SURFACE TO THE PENETRATION 203 ELBOW THEN FROM THE INSIDE FROM THE 203 PENETRATION TO THE ELBOW VERTICAL WELD. THE EXTERNAL SURFACE OF THE VENT HEADER AND INTERNAL AND EXTERNAL SURFACES OF THE DOWNCOMERS WHERE COMPLETED RFO20. THE VENT HEADER INTERIOR, VENT LINE EXTERIOR, AND THE REMAINDER OF THE VACUUM LINE WILL BE SCHEDULED FOR RFO22.
E1.20		VT3	100%	THE VENT LINE WAS COMPLETED FROM THE INTERNAL SURFACE RFO21. THE VACUUM BREAKER LINES WERE COMPLETED FROM THE EXTERNAL SURFACE TO THE PENETRATION 203 ELBOW THEN FROM THE INSIDE FROM THE 203 PENETRATION TO THE ELBOW VERTICAL WELD. THE EXTERNAL SURFACE OF THE VENT HEADER AND INTERNAL AND EXTERNAL DOWN COMER SURFACES WHERE COMPLETED RFO20.
E1.11	VENT SYSTEM BAY 4 (VENT LINE ASSEMBLY, VACUUM BREAKER LINES, AND VENT HEADER IN BAY 4 AND BAY 5)	GV	75%	THE VENT LINE WAS COMPLETED FROM THE INTERNAL SURFACE RFO21. THE VACUUM BREAKER LINES WERE COMPLETED FROM THE EXTERNAL SURFACE TO THE PENETRATION 203 ELBOW THEN FROM THE INSIDE FROM THE 203 PENETRATION TO THE ELBOW VERTICAL WELD. THE EXTERNAL SURFACE OF THE VENT HEADER AND INTERNAL AND EXTERNAL SURFACES OF THE DOWNCOMERS WHERE COMPLETED RFO20. THE VENT HEADER INTERIOR, VENT LINE EXTERIOR, AND THE REMAINDER OF THE VACUUM LINE WILL BE SCHEDULED FOR RFO22.
E1.20		VT3	100%	THE VENT LINE WAS COMPLETED FROM THE INTERNAL SURFACE RFO21. THE VACUUM BREAKER LINES WERE COMPLETED FROM THE EXTERNAL SURFACE TO THE PENETRATION 203 ELBOW THEN FROM THE INSIDE FROM THE 203 PENETRATION TO THE ELBOW VERTICAL WELD. THE EXTERNAL SURFACE OF THE VENT HEADER AND INTERNAL AND EXTERNAL SURFACES OF THE DOWNCOMERS WHERE COMPLETED RFO20.
E1.11	VENT SYSTEM BAY 6 (VENT LINE ASSEMBLY, VACUUM BREAKER LINES, AND VENT HEADER IN BAY 6 AND BAY 7)	GV	75%	THE VENT LINE WAS COMPLETED FROM THE INTERNAL SURFACE RFO21. THE VACUUM BREAKER LINES WERE COMPLETED FROM THE EXTERNAL SURFACE TO THE PENETRATION 203 ELBOW THEN FROM THE INSIDE FROM THE 203 PENETRATION TO THE ELBOW VERTICAL WELD. THE EXTERNAL SURFACE OF THE VENT HEADER AND INTERNAL AND EXTERNAL SURFACES OF THE DOWNCOMERS WHERE COMPLETED RFO20. THE VENT HEADER INTERIOR, VENT LINE EXTERIOR, AND THE REMAINDER OF THE VACUUM LINE WILL BE SCHEDULED FOR RFO22.

E1.11	VENT SYSTEM BAY 8 (VENT LINE ASSEMBLY, VACUUM BREAKER LINES, AND VENT HEADER IN BAY 8 AND BAY 9)	GV	75%	THE VENT LINE WAS COMPLETED FROM THE INTERNAL SURFACE RFO21. THE VACUUM BREAKER LINES WERE COMPLETED FROM THE EXTERNAL SURFACE TO THE PENETRATION 203 ELBOW THEN FROM THE INSIDE FROM THE 203 PENETRATION TO THE ELBOW VERTICAL WELD. THE EXTERNAL SURFACE OF THE VENT HEADER AND INTERNAL AND EXTERNAL SURFACES OF THE DOWNCOMERS WHERE COMPLETED RFO20. THE VENT HEADER INTERIOR, VENT LINE EXTERIOR, AND THE REMAINDER OF THE VACUUM LINE WILL BE SCHEDULED FOR RFO22.
E1.11	VENT SYSTEM BAY 10 (VENT LINE ASSEMBLY, VACUUM BREAKER LINES, AND VENT HEADER IN BAY 10 AND BAY 11)	GV	75%	THE VENT LINE WAS COMPLETED FROM THE INTERNAL SURFACE RFO21. THE VACUUM BREAKER LINES WERE COMPLETED FROM THE EXTERNAL SURFACE TO THE PENETRATION 203 ELBOW THEN FROM THE INSIDE FROM THE 203 PENETRATION TO THE ELBOW VERTICAL WELD. THE EXTERNAL SURFACE OF THE VENT HEADER AND INTERNAL AND EXTERNAL SURFACES OF THE DOWNCOMERS WHERE COMPLETED RFO20. THE VENT HEADER INTERIOR, VENT LINE EXTERIOR, AND THE REMAINDER OF THE VACUUM LINE WILL BE SCHEDULED FOR RFO22.
E1.11	VENT SYSTEM BAY 12 (VENT LINE ASSEMBLY, VACUUM BREAKER LINES, AND VENT HEADER IN BAY 12 AND BAY 13)	GV	75%	THE VENT LINE WAS COMPLETED FROM THE INTERNAL SURFACE RFO21. THE VACUUM BREAKER LINES WERE COMPLETED FROM THE EXTERNAL SURFACE TO THE PENETRATION 203 ELBOW THEN FROM THE INSIDE FROM THE 203 PENETRATION TO THE ELBOW VERTICAL WELD. THE EXTERNAL SURFACE OF THE VENT HEADER AND INTERNAL AND EXTERNAL SURFACES OF THE DOWNCOMERS WHERE COMPLETED RFO20. THE VENT HEADER INTERIOR, VENT LINE EXTERIOR, AND THE REMAINDER OF THE VACUUM LINE WILL BE SCHEDULED FOR RFO22.
E1.11	VENT SYSTEM BAY 14 (VENT LINE ASSEMBLY, VACUUM BREAKER LINES, AND VENT HEADER IN BAY 14 AND BAY 15)	GV	75%	THE VENT LINE WAS COMPLETED FROM THE INTERNAL SURFACE RFO21. THE VACUUM BREAKER LINES WERE COMPLETED FROM THE EXTERNAL SURFACE TO THE PENETRATION 203 ELBOW THEN FROM THE INSIDE FROM THE 203 PENETRATION TO THE ELBOW VERTICAL WELD. THE EXTERNAL SURFACE OF THE VENT HEADER AND INTERNAL AND EXTERNAL SURFACES OF THE DOWNCOMERS WHERE COMPLETED RFO20. THE VENT HEADER INTERIOR, VENT LINE EXTERIOR, AND THE REMAINDER OF THE VACUUM LINE WILL BE SCHEDULED FOR RFO22.
E1.11	VENT SYSTEM BAY 16 (VENT LINE ASSEMBLY, VACUUM BREAKER LINES, AND VENT HEADER IN BAY 16 AND BAY 1)	GV	75%	THE VENT LINE WAS COMPLETED FROM THE INTERNAL SURFACE RFO21. THE VACUUM BREAKER LINES WERE COMPLETED FROM THE EXTERNAL SURFACE TO THE PENETRATION 203 ELBOW THEN FROM THE INSIDE FROM THE 203 PENETRATION TO THE ELBOW VERTICAL WELD. THE EXTERNAL SURFACE OF THE VENT HEADER AND INTERNAL AND EXTERNAL SURFACES OF THE DOWNCOMERS WHERE COMPLETED RFO20. THE VENT HEADER INTERIOR, VENT LINE EXTERIOR, AND THE REMAINDER OF THE VACUUM LINE WILL BE SCHEDULED FOR RFO22.
CONTAINMENT SURFACES (TORUS PENETRATIONS)				ASME SECTION XI EXAM. CATEGORY: E-A
E1.11	Torus Penetration X-200A & B	GV	100%	COMPLETE INTERNAL AND EXTERNAL
E1.12		VT-3	100%	COMPLETE FROM EXTERNAL RFO21
E1.11	Torus Penetration X-201A THRU H	GV	50%	COMPLETE FROM INTERNAL RFO21 EXTERNAL TO BE SCHEDULED BEFORE OR DURING RFO22
E1.11	Torus Penetration X-202A THRU F	GV	100%	COMPLETE FROM INTERNAL AND EXTERNAL RFO21

E1.11	Torus Penetration X-202G THRU K	GV	100%	COMPLETE FROM INTERNAL AND EXTERNAL RFO21
E1.11	Torus Penetration X-203A THRU F	GV	50%	COMPLETE FROM INTERNAL RFO21 EXTERNAL TO BE SCHEDULED BEFORE OR DURING RFO22
E1.11	Torus Penetration X-203G THRU H	GV	50%	COMPLETE FROM INTERNAL RFO21 EXTERNAL TO BE SCHEDULED BEFORE OR DURING RFO22
E1.11	Torus Penetration X-205	GV	100%	COMPLETE FROM INTERNAL AND EXTERNAL RFO21
E1.11	Torus Penetration X-206A THRU D	GV	75%	A & D COMPLETED FROM INTERNAL RFO21 (B&C ARE BELOW WATER LINE FOR INTERNAL) B & C COMPLETED FROM EXTERNAL RFO21 A & D EXTERNAL RESCHEDULE FOR RFO22
E1.12		VT-3	50%	B & C COMPLETED FROM EXTERNAL RFO21 A & D RESCHEDULE FOR RFO22
E1.11	Torus Penetration X-206E THRU F	GV	100%	COMPLETE FROM EXTERNAL RFO21 (UNDERWATER)
E1.12		VT-3	100%	COMPLETE FROM EXTERNAL RFO21
E1.11	Torus Penetration X-207A THRU H	GV	50%	COMPLETE FROM EXTERNAL RFO21 INTERNAL TO BE RESCHEDULED FOR RFO22
E1.11	Torus Penetration X-208A THRU D	GV	100%	COMPLETE FROM INTERNAL AND EXTERNAL RFO21
E1.11	Torus Penetration X-209A THRU D	GV	75%	A & D COMPLETED FROM INTERNAL RFO21 (B&C ARE BELOW WATER LINE FOR INTERNAL) B & C COMPLETED FROM EXTERNAL RFO21 A&D RESCHEDULE FOR RFO22
E1.11	Torus Penetration X-210A & B	GV	100%	COMPLETE FROM INTERNAL AND EXTERNAL RFO21
E1.11	Torus Penetration X-211A & B	GV	100%	COMPLETE FROM INTERNAL AND EXTERNAL RFO21
E1.11	Torus Penetration X-212	GV	100%	COMPLETE FROM INTERNAL AND EXTERNAL RFO21
E1.11	Torus Penetration X-213A & B	GV	100%	COMPLETE FROM EXTERNAL RFO21 (UNDER WATER)
E1.12		VT-3	100%	COMPLETE FROM EXTERNAL RFO21 (UNDER WATER)
E1.11	Torus Penetration X-214	GV	100%	COMPLETE FROM INTERNAL AND EXTERNAL RFO21
E1.11	Torus Penetration X-215	GV	100%	COMPLETE FROM INTERNAL AND EXTERNAL RFO21
E1.11	Torus Penetration X-216	GV	100%	COMPLETE FROM INTERNAL AND EXTERNAL RFO21
E1.11	Torus Penetration X-217	GV	100%	COMPLETE FROM INTERNAL AND EXTERNAL RFO21
E1.11	Torus Penetration X-218	GV	100%	COMPLETE FROM INTERNAL AND EXTERNAL RFO21
E1.11	Torus Penetration X-219	GV	100%	COMPLETE FROM INTERNAL AND EXTERNAL RFO21
E1.11	Torus Penetration X-220	GV	100%	COMPLETE FROM INTERNAL AND EXTERNAL RFO21

E1.11	Torus Penetration X-221	GV	100%	COMPLETE FROM INTERNAL AND EXTERNAL RFO21
E1.11	Torus Penetration X-222	GV	100%	COMPLETE FROM INTERNAL AND EXTERNAL RFO21
E1.11	Torus Penetration X-223	GV	100%	COMPLETE FROM INTERNAL AND EXTERNAL RFO21
E1.11	Torus Penetration X-224A & B	GV	100%	COMPLETE FROM EXTERNAL RFO21
E1.12		VT-3	0%	INSULATION PREVENTING INSPECTION FROM EXTERNAL, INTERNAL UNDER WATER. NOT COMPLETE AT THIS TIME. TO BE RESCHEDULED. THIS WILL BE RESCHEDULED WHEN DIVERS ARE IN TORUS ALONG WITH THE UNDERWATER SURFACES. RESCHEDULE THIS ACTIVITY.
E1.11	Torus Penetration X-225	GV	100%	COMPLETE FROM EXTERNAL RFO21 (UNDER WATER)
E1.12		VT-3	100%	COMPLETE FROM EXTERNAL RFO21 (UNDER WATER)
E1.11	Torus Penetration X-226A & B	GV	100%	COMPLETE FROM EXTERNAL RFO21 (UNDER WATER)
E1.12		VT-3	100%	COMPLETE FROM EXTERNAL RFO21 (UNDER WATER)
E1.11	Torus Penetration X-227	GV	100%	COMPLETE FROM EXTERNAL RFO21 (UNDER WATER)
E1.12		VT-3	100%	COMPLETE FROM EXTERNAL RFO21 (UNDER WATER)
E1.11	Torus Penetration X-228	GV	100%	COMPLETED FROM EXTERIOR RFO21 (NOT ACCESSIBLE FROM INTERIOR)
E1.11	Torus Penetration X-229	GV	100%	COMPLETED FROM EXTERIOR RFO21 (NOT ACCESSIBLE FROM INTERIOR)
E1.11	Torus Penetration X-230	GV	100%	COMPLETED FROM EXTERIOR RFO21
E1.11	Torus Penetration X-231 A-H	GV	80%	A,C,E, &G COMPLETED FROM INTERIOR RFO21 (B,D,F &H ARE UNDER WATER FROM INTERNAL) B,D,F,G & H COMPLETED FROM EXTERNAL RFO21 RESCHEDULE A,C, & E FOR RFO22
CONTAINMENT SURFACES (DRYWELL SURFACES)				ASME SECTION XI EXAM. CATEGORY: E-A
E1.11	Drywell elevation 238 to elevation 251 quadrant 0 to 90 degrees	GV	100%	COMPLETED FROM INTERNAL RFO21 EXTERNAL INACCESSIBLE BY DESIGN
E1.12		VT-3	100%	COMPLETED FROM INTERNAL RFO21 EXTERNAL INACCESSIBLE BY DESIGN
E1.11	Drywell elevation 238 to elevation 251 quadrant 90 to 180 degrees	GV	100%	COMPLETED FROM INTERNAL RFO21 EXTERNAL INACCESSIBLE BY DESIGN
E1.12		VT-3	100%	COMPLETED FROM INTERNAL RFO21 EXTERNAL INACCESSIBLE BY DESIGN
E1.11	Drywell elevation 238 to elevation 251 quadrant 180 to 270 degrees	GV	100%	COMPLETED FROM INTERNAL RFO21 EXTERNAL INACCESSIBLE BY DESIGN
E1.12		VT-3	100%	COMPLETED FROM INTERNAL RFO21 EXTERNAL INACCESSIBLE BY DESIGN
E1.11	Drywell elevation 238 to elevation 251 quadrant 270 to 360 degrees	GV	100%	COMPLETED FROM INTERNAL RFO21 EXTERNAL INACCESSIBLE BY DESIGN

E1.12		VT-3	100%	COMPLETED FROM INTERNAL RFO21 EXTERNAL INACCESSIBLE BY DESIGN
E1.11	Drywell elevation 251 to elevation 269 quadrant 0 to 90 degrees	GV	100%	COMPLETED FROM INTERNAL RFO21 EXTERNAL INACCESSIBLE BY DESIGN
E1.12		VT-3	100%	COMPLETED FROM INTERNAL RFO21 EXTERNAL INACCESSIBLE BY DESIGN
E1.11	Drywell elevation 251 to elevation 269 quadrant 90 to 180 degrees	GV	100%	COMPLETED FROM INTERNAL RFO21 EXTERNAL INACCESSIBLE BY DESIGN
E1.11	Drywell elevation 251 to elevation 269 quadrant 180 to 270 degrees	GV	100%	COMPLETED FROM INTERNAL RFO21 EXTERNAL INACCESSIBLE BY DESIGN
E1.11	Drywell elevation 251 to elevation 269 quadrant 270 to 360 degrees	GV	100%	COMPLETED FROM INTERNAL RFO21 EXTERNAL INACCESSIBLE BY DESIGN
E1.11	Drywell elevation 269 to elevation 321 quadrant 0 to 90 degrees	GV	100%	COMPLETED FROM INTERNAL RFO21 EXTERNAL INACCESSIBLE BY DESIGN
E1.11	Drywell elevation 269 to elevation 321 quadrant 90 to 180 degrees	GV	100%	COMPLETED FROM INTERNAL RFO21 EXTERNAL INACCESSIBLE BY DESIGN
E1.11	Drywell elevation 269 to elevation 321 quadrant 180 to 270 degrees	GV	100%	COMPLETED FROM INTERNAL RFO21 EXTERNAL INACCESSIBLE BY DESIGN
E1.11	Drywell elevation 269 to elevation 321 quadrant 270 to 360 degrees	GV	100%	COMPLETED FROM INTERNAL RFO21 EXTERNAL INACCESSIBLE BY DESIGN
E1.11	Drywell Head interior surfaces and Drywell flanges	GV	100%	COMPLETED RFO21
E1.11	Drywell Head exterior surfaces	GV	100%	COMPLETED RFO21
CONTAINMENT SURFACES (DRYWELL PENETRATIONS)				
E1.11	Drywell Penetration X-1	GV	100%	COMPLETED INTERNAL AND EXTERNAL RFO21 PORTIONS OF THE EXTERNAL AREA ARE INACCESSIBLE FROM DIRECT VISUAL EXAMINATION BY DESIGN
E1.11	Drywell Penetration X-2	GV	100%	COMPLETED INTERNAL AND EXTERNAL RFO21 PORTIONS OF THE EXTERNAL AREA ARE INACCESSIBLE FROM DIRECT VISUAL EXAMINATION BY DESIGN
E1.11	Drywell Penetration X-4	GV	100%	COMPLETED INTERNAL AND EXTERNAL RFO21
E1.11	Drywell Penetration X-5A THRU X-5H	GV	50%	COMPLETED INTERNAL RFO21 EXTERNAL TO BE COMPLETED BEFORE OR DURING RFO22

E1.12		VT-3		COMPLETED FROM THE INTERNAL SURFACE RFO21
E1.11	Drywell Penetration X-6	GV	50%	COMPLETED FROM INTERIOR RFO21 RESCHEDULE EXTERIOR BEFORE OR DURING RFO22
E1.12		VT-3	0%	RESCHEDULE BEFORE OR DURING RFO22
E1.11	Drywell Penetration X-7A	GV	50%	COMPLETED FROM INTERNAL RFO21 EXTERNAL TO BE SCHEDULED BEFORE OR DURING RFO22
E1.12		VT-3	0%	RESCHEDULE FOR RFO22
E1.11	Drywell Penetration X-7B	GV	50%	COMPLETED FROM INTERNAL RFO21 EXTERNAL TO BE SCHEDULED BEFORE OR DURING RFO22
E1.12		VT-3	0%	RESCHEDULE FOR RFO22
E1.11	Drywell Penetration X-7C	GV	50%	COMPLETED FROM INTERNAL RFO21 EXTERNAL TO BE SCHEDULED BEFORE OR DURING RFO22
E1.12		VT-3	0%	RESCHEDULE FOR RFO22
E1.11	Drywell Penetration X-7D	GV	50%	COMPLETED FROM INTERNAL RFO21 EXTERNAL TO BE SCHEDULED BEFORE OR DURING RFO22
E1.12		VT-3	0%	RESCHEDULE FOR RFO22
E1.11	Drywell Penetration X-8	GV	50%	COMPLETED FROM INTERNAL RFO21 EXTERNAL TO BE SCHEDULED BEFORE OR DURING RFO22
E1.12		VT-3	100%	COMPLETED FROM INTERNAL RFO21
E1.11	Drywell Penetration X-9A	GV	50%	COMPLETED FROM INTERNAL RFO21 EXTERNAL TO BE SCHEDULED BEFORE OR DURING RFO22
E1.12		VT-3	0%	RESCHEDULE FOR RFO22
E1.11	Drywell Penetration X-9B	GV	50%	COMPLETED FROM INTERNAL RFO21 EXTERNAL TO BE SCHEDULED BEFORE OR DURING RFO22
E1.12		VT-3	0%	RESCHEDULE FOR RFO22
E1.11	Drywell Penetration X-10	GV	0%	RESCHEDULE FOR RFO22
E1.11	Drywell Penetration X-11	GV	0%	RESCHEDULE FOR RFO22
E1.11	Drywell Penetration X-12	GV	50%	COMPLETED FROM INTERNAL RFO21 (INACCESSIBLE AREA IDENTIFIED) EXTERNAL TO BE SCHEDULED BEFORE OR DURING RFO22
E1.11	Drywell Penetration X-13A	GV	50%	COMPLETED FROM INTERNAL RFO21 EXTERNAL TO BE SCHEDULED BEFORE OR DURING RFO22
E1.11	Drywell Penetration X-13B	GV	50%	COMPLETED FROM INTERNAL RFO21 EXTERNAL TO BE SCHEDULED BEFORE OR DURING RFO22
E1.11	Drywell Penetration X-14	GV	0%	THIS PENETRATION IS NOT ACCESSIBLE WITHOUT SIGNIFICANT EFFORT TO ACCESS. STAGING WOULD HAVE TO BE BUILT. I AM LOOKING AT CLASSIFYING THIS AS INACCESSIBLE FROM INSIDE. THE EXTERIOR INSPECTION WILL DETERMINE HOW WE HAVE TO DEAL WITH THIS PEN. REVIEW FOR RFO22
E1.11	Drywell Penetration X-15	GV	0%	RESCHEDULE FOR RFO22

E1.11	Drywell Penetration X-16A	GV	0%	THIS PENETRATION IS NOT ACCESSIBLE WITHOUT SIGNIFICANT EFFORT TO ACCESS. STAGING WOULD HAVE TO BE BUILT. THIS PEN ALSO HAS INSULATION CONFIGURATION RESTRICTIONS AND DESIGN RESTRICTIONS. I AM LOOKING AT CLASSIFYING THIS AS INACCESSIBLE FROM INSIDE. THE EXTERIOR INSPECTION WILL DETERMINE HOW WE HAVE TO DEAL WITH THIS PEN. REVIEW FOR RFO22
E1.11	Drywell Penetration X-16B	GV	0%	THIS PENETRATION IS NOT ACCESSIBLE WITHOUT SIGNIFICANT EFFORT TO ACCESS. STAGING WOULD HAVE TO BE BUILT. THIS PEN ALSO HAS INSULATION CONFIGURATION RESTRICTIONS AND DESIGN RESTRICTIONS. I AM LOOKING AT CLASSIFYING THIS AS INACCESSIBLE FROM INSIDE. THE EXTERIOR INSPECTION WILL DETERMINE HOW WE HAVE TO DEAL WITH THIS PEN. REVIEW FOR RFO22
E1.11	Drywell Penetration X-17	GV	50%	COMPLETED FROM INTERNAL RFO21 EXTERNAL TO BE SCHEDULED BEFORE OR DURING RFO22
E1.11	Drywell Penetration X-18	GV	50%	COMPLETED FROM INTERNAL RFO21 EXTERNAL TO BE SCHEDULED BEFORE OR DURING RFO22
E1.12		VT-3	0%	RESCHEDULE FOR RFO22
E1.11	Drywell Penetration X-19	GV	50%	COMPLETED FROM INTERNAL RFO21 EXTERNAL TO BE SCHEDULED BEFORE OR DURING RFO22
E1.12		VT-3	0%	RESCHEDULE FOR RFO22
E1.11	Drywell Penetration X-20	GV	50%	COMPLETED FROM INTERNAL RFO21 EXTERNAL TO BE SCHEDULED BEFORE OR DURING RFO22
E1.12		VT-3	0%	RESCHEDULE FOR RFO22
E1.11	Drywell Penetration X-21	GV	50%	COMPLETED FROM INTERNAL RFO21 EXTERNAL TO BE SCHEDULED BEFORE OR DURING RFO22
E1.12		VT-3	0%	RESCHEDULE FOR RFO22
E1.11	Drywell Penetration X-22	GV	50%	COMPLETED FROM INTERNAL RFO21 EXTERNAL TO BE SCHEDULED BEFORE OR DURING RFO22
E1.12		VT-3	0%	RESCHEDULE FOR RFO22
E1.11	Drywell Penetration X-23	GV	0%	RESCHEDULE FOR RFO22
E1.12		VT-3	0%	RESCHEDULE FOR RFO22
E1.11	Drywell Penetration X-24	GV	0%	RESCHEDULE FOR RFO22
E1.12		VT-3	0%	RESCHEDULE FOR RFO22
E1.11	Drywell Penetration X-25	GV	50%	COMPLETED FROM INTERNAL RFO21 EXTERNAL TO BE SCHEDULED BEFORE OR DURING RFO22
E1.11	Drywell Penetration X-26	GV	50%	COMPLETED FROM INTERNAL RFO21 EXTERNAL TO BE SCHEDULED BEFORE OR DURING RFO22
E1.12		VT-3	100%	COMPLETED FROM INTERNAL RFO21
E1.11	Drywell Penetration X-27	GV	50%	COMPLETED FROM INTERNAL RFO21 EXTERNAL TO BE SCHEDULED BEFORE OR DURING RFO22
E1.12		VT-3	0%	RESCHEDULE FOR RFO22

E1.11	Drywell Penetration X-28	GV	50%	COMPLETED FROM INTERNAL RFO21 EXTERNAL TO BE SCHEDULED BEFORE OR DURING RFO22
E1.11	Drywell Penetration X-29	GV	0%	RESCHEDULE FOR RFO22
E1.11	Drywell Penetration X-30	GV	50%	COMPLETED FROM INTERNAL RFO21 EXTERNAL TO BE SCHEDULED BEFORE OR DURING RFO22
E1.12		VT-3	100%	COMPLETED FROM INTERNAL RFO21
E1.11	Drywell Penetration X-31	GV	50%	COMPLETED FROM INTERNAL RFO21 EXTERNAL TO BE SCHEDULED BEFORE OR DURING RFO22
E1.12		VT-3	100%	COMPLETED FROM INTERNAL RFO21
E1.11	Drywell Penetration X-32	GV	50%	COMPLETED FROM INTERNAL RFO21 EXTERNAL TO BE SCHEDULED BEFORE OR DURING RFO22
E1.12		VT-3	100%	COMPLETED FROM INTERNAL RFO21
E1.11	Drywell Penetration X-33	GV	50%	COMPLETED FROM INTERNAL RFO21 EXTERNAL TO BE SCHEDULED BEFORE OR DURING RFO22
E1.11	Drywell Penetration X-34	GV	0%	RESCHEDULE FOR RFO22
E1.12		VT-3	0%	RESCHEDULE FOR RFO22
E1.11	Drywell Penetration X-35A	GV	50%	COMPLETED FROM INTERNAL RFO21 EXTERNAL TO BE SCHEDULED BEFORE OR DURING RFO22
E1.12		VT-3	100%	COMPLETED FROM INTERNAL RFO21
E1.11	Drywell Penetration X-35B	GV	50%	COMPLETED FROM INTERNAL RFO21 EXTERNAL TO BE SCHEDULED BEFORE OR DURING RFO22
E1.12		VT-3	100%	COMPLETED FROM INTERNAL RFO21
E1.11	Drywell Penetration X-35C	GV	50%	COMPLETED FROM INTERNAL RFO21 EXTERNAL TO BE SCHEDULED BEFORE OR DURING RFO22
E1.12		VT-3	100%	COMPLETED FROM INTERNAL RFO21
E1.11	Drywell Penetration X-35D	GV	50%	COMPLETED FROM INTERNAL RFO21 EXTERNAL TO BE SCHEDULED BEFORE OR DURING RFO22
E1.12		VT-3	100%	COMPLETED FROM INTERNAL RFO21
E1.11	Drywell Penetration X-35E	GV	50%	COMPLETED FROM INTERNAL RFO21 EXTERNAL TO BE SCHEDULED BEFORE OR DURING RFO22
E1.12		VT-3	100%	COMPLETED FROM INTERNAL RFO21
E1.11	Drywell Penetration X-36	GV	50%	COMPLETED FROM INTERNAL RFO21 EXTERNAL TO BE SCHEDULED BEFORE OR DURING RFO22
E1.11	Drywell Penetration X-37A	GV	50%	COMPLETED FROM INTERNAL RFO21 EXTERNAL TO BE SCHEDULED BEFORE OR DURING RFO22
E1.11	Drywell Penetration X-37B	GV	50%	COMPLETED FROM INTERNAL RFO21 EXTERNAL TO BE SCHEDULED BEFORE OR DURING RFO22
E1.11	Drywell Penetration X-37C	GV	50%	COMPLETED FROM INTERNAL RFO21 EXTERNAL TO BE SCHEDULED BEFORE OR DURING RFO22
E1.11	Drywell Penetration X-37D	GV	50%	COMPLETED FROM INTERNAL RFO21 EXTERNAL TO BE SCHEDULED BEFORE OR DURING RFO22

E1.11	Drywell Penetration X-38A	GV	50%	COMPLETED FROM INTERNAL RFO21 EXTERNAL TO BE SCHEDULED BEFORE OR DURING RFO22
E1.11	Drywell Penetration X-38B	GV	50%	COMPLETED FROM INTERNAL RFO21 EXTERNAL TO BE SCHEDULED BEFORE OR DURING RFO22
E1.11	Drywell Penetration X-38C	GV	50%	COMPLETED FROM INTERNAL RFO21 EXTERNAL TO BE SCHEDULED BEFORE OR DURING RFO22
E1.11	Drywell Penetration X-38D	GV	50%	COMPLETED FROM INTERNAL RFO21 EXTERNAL TO BE SCHEDULED BEFORE OR DURING RFO22
E1.11	Drywell Penetration X-39A	GV	50%	COMPLETED FROM INTERNAL RFO21 EXTERNAL TO BE SCHEDULED BEFORE OR DURING RFO22
E1.11	Drywell Penetration X-39B	GV	50%	COMPLETED FROM INTERNAL RFO21 EXTERNAL TO BE SCHEDULED BEFORE OR DURING RFO22
E1.11	Drywell Penetration X-40A	GV	50%	COMPLETED FROM INTERNAL RFO21 EXTERNAL TO BE SCHEDULED BEFORE OR DURING RFO22
E1.11	Drywell Penetration X-40B	GV	50%	COMPLETED FROM INTERNAL RFO21 EXTERNAL TO BE SCHEDULED BEFORE OR DURING RFO22
E1.11	Drywell Penetration X-40C	GV	50%	COMPLETED FROM INTERNAL RFO21 EXTERNAL TO BE SCHEDULED BEFORE OR DURING RFO22
E1.11	Drywell Penetration X-40D	GV	50%	COMPLETED FROM INTERNAL RFO21 EXTERNAL TO BE SCHEDULED BEFORE OR DURING RFO22
E1.11	Drywell Penetration X-41	GV	0%	RESCHEDULE FOR RFO22
E1.11	Drywell Penetration X-42	GV	50%	COMPLETED FROM INTERNAL RFO21 EXTERNAL TO BE SCHEDULED BEFORE OR DURING RFO22
E1.11	Drywell Penetration X-43	GV	50%	COMPLETED FROM INTERNAL RFO21 EXTERNAL TO BE SCHEDULED BEFORE OR DURING RFO22
E1.11	Drywell Penetration X-44	GV	50%	COMPLETED FROM INTERNAL RFO21 EXTERNAL TO BE SCHEDULED BEFORE OR DURING RFO22
E1.11	Drywell Penetration X-45	GV	50%	COMPLETED FROM INTERNAL RFO21 EXTERNAL TO BE SCHEDULED BEFORE OR DURING RFO22
E1.11	Drywell Penetration X-46	GV	50%	COMPLETED FROM INTERNAL RFO21 EXTERNAL TO BE SCHEDULED BEFORE OR DURING RFO22
E1.11	Drywell Penetration X-47	GV	0%	RESCHEDULE FOR RFO22
E1.11	Drywell Penetration X-48	GV	50%	COMPLETED FROM INTERNAL RFO21 EXTERNAL TO BE SCHEDULED BEFORE OR DURING RFO22
E1.12		VT-3	0%	RESCHEDULE FOR RFO22
E1.11	Drywell Penetration X-49	GV	50%	COMPLETED FROM INTERNAL RFO21 EXTERNAL TO BE SCHEDULED BEFORE OR DURING RFO22
E1.11	Drywell Penetration X-50	GV	50%	COMPLETED FROM INTERNAL RFO21 EXTERNAL TO BE SCHEDULED BEFORE OR DURING RFO22
E1.11	Drywell Penetration X-51	GV	50%	COMPLETED FROM INTERNAL RFO21 EXTERNAL TO BE SCHEDULED BEFORE OR DURING RFO22
E1.11	Drywell Penetration X-52	GV	50%	COMPLETED FROM INTERNAL RFO21 EXTERNAL TO BE SCHEDULED BEFORE OR DURING RFO22

E1.11	Drywell Penetration X-100A	GV	50%	COMPLETED FROM INTERNAL RFO21 (INACCESSIBLE AREA IDENTIFIED) EXTERNAL TO BE SCHEDULED BEFORE OR DURING RFO22
E1.11	Drywell Penetration X-100B	GV	50%	COMPLETED FROM INTERNAL RFO21 (INACCESSIBLE AREA IDENTIFIED) EXTERNAL TO BE SCHEDULED BEFORE OR DURING RFO22
E1.11	Drywell Penetration X-100C	GV	50%	COMPLETED FROM INTERNAL RFO21 (INACCESSIBLE AREA IDENTIFIED) EXTERNAL TO BE SCHEDULED BEFORE OR DURING RFO22
E1.11	Drywell Penetration X-100D	GV	50%	COMPLETED FROM INTERNAL RFO21 (INACCESSIBLE AREA IDENTIFIED) EXTERNAL TO BE SCHEDULED BEFORE OR DURING RFO22
E1.11	Drywell Penetration X-101A	GV	50%	COMPLETED FROM INTERNAL RFO21 (INACCESSIBLE AREA IDENTIFIED) EXTERNAL TO BE SCHEDULED BEFORE OR DURING RFO22
E1.11	Drywell Penetration X-101B	GV	50%	COMPLETED FROM INTERNAL RFO21 (INACCESSIBLE AREA IDENTIFIED) EXTERNAL TO BE SCHEDULED BEFORE OR DURING RFO22
E1.11	Drywell Penetration X-101C	GV	50%	COMPLETED FROM INTERNAL RFO21 (INACCESSIBLE AREA IDENTIFIED) EXTERNAL TO BE SCHEDULED BEFORE OR DURING RFO22
E1.11	Drywell Penetration X-101D	GV	50%	COMPLETED FROM INTERNAL RFO21 (INACCESSIBLE AREA IDENTIFIED) EXTERNAL TO BE SCHEDULED BEFORE OR DURING RFO22
E1.11	Drywell Penetration X-102	GV	50%	COMPLETED FROM INTERNAL RFO21 (INACCESSIBLE AREA IDENTIFIED) EXTERNAL TO BE SCHEDULED BEFORE OR DURING RFO22
E1.11	Drywell Penetration X-103	GV	50%	COMPLETED FROM INTERNAL RFO21 (INACCESSIBLE AREA IDENTIFIED) EXTERNAL TO BE SCHEDULED BEFORE OR DURING RFO22
E1.11	Drywell Penetration X-104A	GV	50%	COMPLETED FROM INTERNAL RFO21 (INACCESSIBLE AREA IDENTIFIED) EXTERNAL TO BE SCHEDULED BEFORE OR DURING RFO22
E1.11	Drywell Penetration X-104B	GV	50%	COMPLETED FROM INTERNAL RFO21 (INACCESSIBLE AREA IDENTIFIED) EXTERNAL TO BE SCHEDULED BEFORE OR DURING RFO22
E1.11	Drywell Penetration X-104C	GV	50%	COMPLETED FROM INTERNAL RFO21 (INACCESSIBLE AREA IDENTIFIED) EXTERNAL TO BE SCHEDULED BEFORE OR DURING RFO22
E1.11	Drywell Penetration X-105A	GV	50%	COMPLETED FROM INTERNAL RFO21 (INACCESSIBLE AREA IDENTIFIED) EXTERNAL TO BE SCHEDULED BEFORE OR DURING RFO22
E1.11	Drywell Penetration X-105B	GV	50%	COMPLETED FROM INTERNAL RFO21 (INACCESSIBLE AREA IDENTIFIED) EXTERNAL TO BE SCHEDULED BEFORE OR DURING RFO22
E1.11	Drywell Penetration X-105C	GV	50%	COMPLETED FROM INTERNAL RFO21 (INACCESSIBLE AREA IDENTIFIED) EXTERNAL TO BE SCHEDULED BEFORE OR DURING RFO22
E1.11	Drywell Penetration X-105D	GV	50%	COMPLETED FROM INTERNAL RFO21 (INACCESSIBLE AREA IDENTIFIED) EXTERNAL TO BE SCHEDULED BEFORE OR DURING RFO22

E1.11	Drywell Penetration X-106	GV	50%	COMPLETED FROM INTERNAL RFO21 EXTERNAL TO BE SCHEDULED BEFORE OR DURING RFO22
E1.11	Drywell Penetration X-107	GV	50%	COMPLETED FROM INTERNAL RFO21 EXTERNAL TO BE SCHEDULED BEFORE OR DURING RFO22

CONTAINMENT SEALS, GASKETS, AND MOISTURE BARRIERS				ASME SECTION XI EXAM. CATEGORY: E-D
ASME SECTION XI ITEM NO.	ISI IDENTIFICATION NO./DESCRIPTION	Exam	% COMPLETE TO DATE	REMARKS
E5.30	DRY WELL INTERIOR MOISTURE BARRIER	VT-3	100%	INSPECTION COMPLETED RFO21 DISCREPANCIES WERE IDENTIFIED AND DISPOSITION FOR THIS ITEM IS WITH MECHANICAL DESIGN ENGINEERING

CONTAINMENT PRESSURE RETAINING BOLTING				ASME SECTION XI EXAM. CATEGORY: E-G
ASME SECTION XI ITEM NO.	ISI IDENTIFICATION NO./DESCRIPTION	Exam	% COMPLETE TO DATE	REMARKS
E8.10	TORUS MANWAY FLANGE BOLTING PENETRATION 200A	VT-1	0%	RESCHEDULE FOR RFO22
E8.10	TORUS MANWAY FLANGE BOLTING PENETRATION 200B	VT-1	0%	RESCHEDULE FOR RFO22
E8.10	NEUTRON MONITORING SYSTEM PENETRATION 35A	VT-1	0%	RESCHEDULE FOR RFO22
E8.10	NEUTRON MONITORING SYSTEM PENETRATION 35B	VT-1	0%	RESCHEDULE FOR RFO22
E8.10	NEUTRON MONITORING SYSTEM PENETRATION 35C	VT-1	0%	RESCHEDULE FOR RFO22
E8.10	NEUTRON MONITORING SYSTEM PENETRATION (SPARE) 35D	VT-1	0%	RESCHEDULE FOR RFO22
E8.10	NEUTRON MONITORING SYSTEM PENETRATION 35E	VT-1	0%	RESCHEDULE FOR RFO22

Vermont Yankee
Visual Examination Report Form
VT-1, Containment Surfaces (IWE)

Data Sheet No: 8045-01-010

Work Order No.: 00-5037

Procedure No/Rev.: NE 8045 REV. 1

Page 1 of 1 Date: 5-1-01

Component

Component ID: DRYWELL INTERIOR MOISTURE BARRIER System: PRIMARY CONTAINMENT

Drawing No/Rev.: 6202-2 REV. 0 LOCATION: ELEV. 238' VENT LINE AREAS X-5B, C, D, E

Visual Aids			Illumination Level Check		
■ Mirror	■ Illumination Card/No. VY8			Time	Date
■ Light Source (Describe)	■ Other: DEARMAN UNDERCUT GAUGE		Initial PRE 213 FC	8:05 AM	5-1-01
Method	**Photo**	**Sketch**	Intermediate	N/A	N/A
■ Direct	■ None	■ None	Intermediate	N/A	N/A
☐ Remote	☐ Attached	☐ Attached	Final POST 178 FC	9:15 AM	5-1-01

Remote Examination Conditions/Equipment Remarks Light Meter Used No. 812153 Due 4-13-02

	Acceptable	Recordable	N/A	Remarks/Observations
Cracks/Linears			J.E. 5-1-01	NOTE: AUGMENTED UT-1 INSP.
Physical Damage		J.E. 5-1-01		performed to ASCERTAIN NO
Corrosion		J.E. 5-1-01		Further degredation to
Erosion			J.E. 5-1-01	base metal has occured on
Gouges			J.E. 5-1-01	AREAS documented on Report
Wear			J.E. 5-1-01	VA-IWE-UT-188. Conditions
Arc Strikes			J.E. 5-1-01	ARE the SAME. See report
Other (Explain)			J.E. 5-1-01	VA-IWE-UT-188. No further degredation measured.

Examiner: Ted El-Hajj Level: II Date: 5-1-01

Examiner: N/A Level: N/A Date: N/A

Reviewer: [signature] Date: 5/2/01

Reviewer: N/A Date: N/A

ANII: [signature] Date: 5-2-01

Evaluation Required? ☐ Yes ☒ No

Data Sheet No.: 8053-01-063
Procedure No/Rev. NE 8053 Rev 0/LPC #1
Page 1 of 2 Date: 5/8/01
Work Order Number: 00-005037-000

Thickness Calibration Data Sheet

Component * IWE EXAM CATEGORY E-C 5.10-01

Component ID: Drywell Seal Area * System: Drywell
Drawing Number/Rev.: 6202-2 Rev0 Plant Location: Drywell elev. 238
Material: C/S Product Form: Wrought Nominal Thickness: 1.000/2.500

Instrument

Instrument Make: Panametrics Instrument Model: 26 DL Plus Instrument S/N: 93129307

Instrument Display: CRT ( ) Digital (✓) Horizontal Linearity Performed?: Yes ( ) No (✓)

Calibration Block

Serial Number: E/C 1-1, E/C 1-2 Calibration Block Material: C/S Product Form: Wrought
Block Temperature: 75 °F Thicknesses: .800 - 3.001
M&TE Used?: Yes ( ) No (✓) M&TE Description / S/N: N/A

Calibration Times

Initial Calibration: 0800 Check: 1300 Check: N/A Check: N/A Check: N/A Final: 1630

Sketch and Examination Results: See page two

* REPAIR AREA PRIOR TO PAINT APPLICATION
5.10.01

** These examinations are not for a repair area. These UT examinations were requested by the Responsible Engineer as the initial base line UT thickness readings for the defined augmented examinations in the drywell Seal Area. The drywell to steel moisure barrier was in the process of being replaced and as a result, the lower 6" of steel containment to floor had the paint removed to clean metal in preparation for the seal replacement. The low points in the one-foot by one-foot grids typically occurred in the lower 6" area. All low point thickness identified are bounded by evaluation VYM 99/139 and are acceptable without further evaluations. RC 5/11/01

Component Temperature: 75 F°

Examiner: Robert B. Birkbeck Level: II-L Date: 5/8/01
Examiner: Jason Polisensky Level: II Date: 5/8/01
Reviewer: Date: 5.10.01
** Cog. Engineer: Responsible Engineer Date: 5/11/01
ANII: Date: 5-11-01

Evaluation Required:
xxx
Yes (✓) No ( )

Form Number:
VYNEF8053.01
Page 1 of 1
NE 8053 Original
LPC # 1

Experience Hours Credit: _____

xxx See explaination provided Above. Accept as is. Responsible Engineer 5/11/01

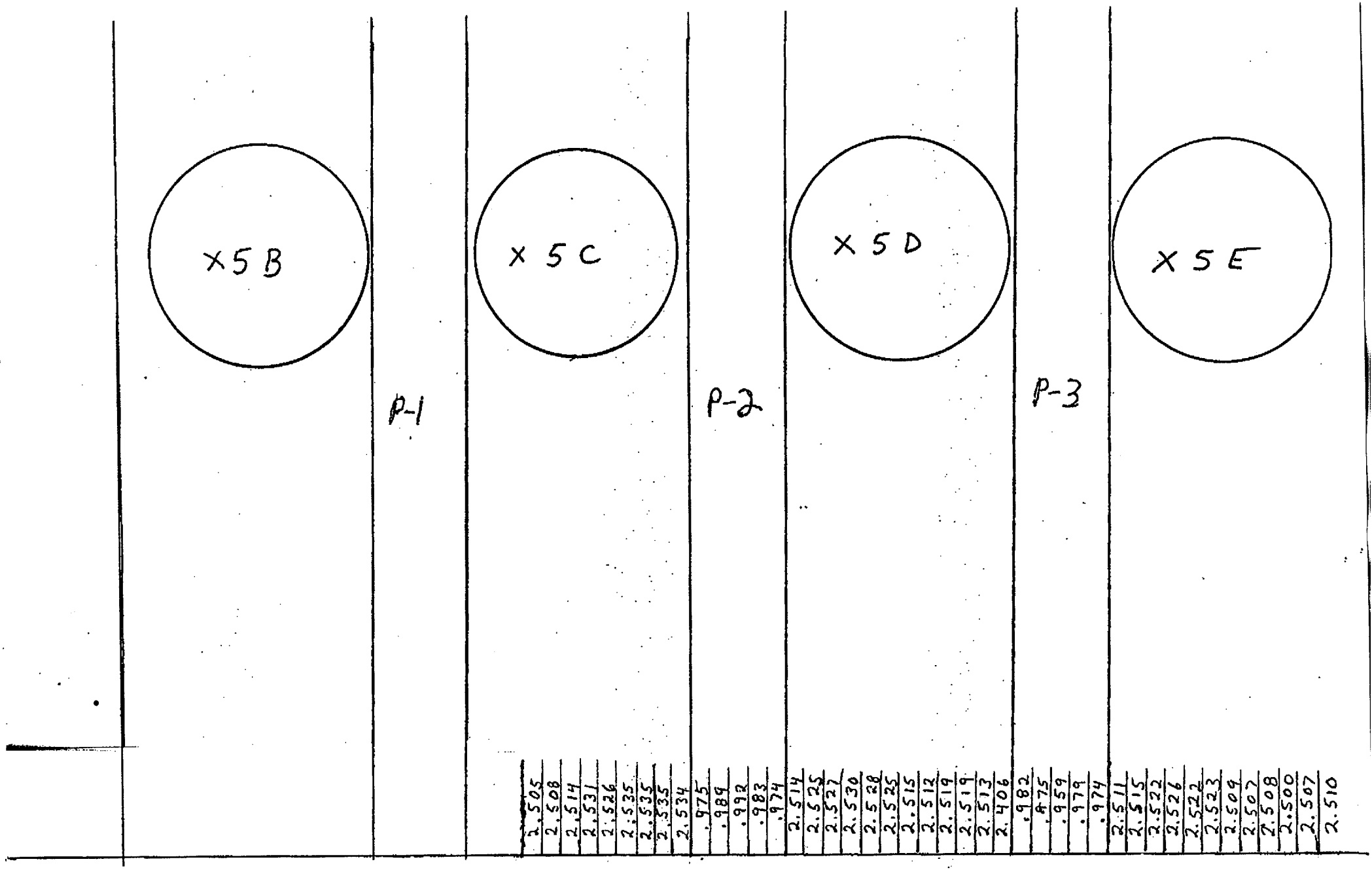

43 12"x12" grids

FLOOR

Robert B Eckhardt LV II L 5/8/01

Jason Polovoy II 5/8/01

5-11-01

REVIEW: [illegible] 5-10-01

DATA SHEET NO.
8053-01-063

Data Sheet No.: 8053-01-064
Procedure No/Rev. NE 8053 REV 0/LPC #1
Page 1 of 2 Date: 5-9-01
Work Order Number: 00-005037-000

Thickness Calibration Data Sheet

Component * IWE EXAM CATEGORY E-C MJM 5.10.01

Component ID: DRY WELL SEAL AREA * System: DRYWELL
Drawing Number/Rev.: 6202-2 REV 0 Plant Location: DRY WELL 232' ELV.
Material: CARBON STEEL Product Form: WROUGHT Nominal Thickness: 1.0" ⅌ 2.5"

Instrument

Instrument Make: PANAMETRICS Instrument Model: 26 DL PLUS Instrument S/N: 9312 9307

Instrument Display: CRT ( ) Digital (✓) Horizontal Linearity Performed?: Yes ( ) No (✓)

Calibration Block

Serial Number: E/C 1-1 E/C 1-2 Calibration Block Material: CARBON STEEL Product Form: WROUGHT
Block Temperature: 75 °F Thicknesses: 0.800", 0.899", 1.500", 2.000", 2.501", 3.001
M&TE Used?: Yes ( ) No (✓) M&TE Description / S/N:

Calibration Times

Initial Calibration: 0800 Check: N/A Check: N/A Check: N/A Check: N/A Final: 1050

Sketch and Examination Results: SEE PAGE TWO.

* REPAIR AREA PRIOR TO PAINT APPLICATION
SLP Tong 5.10.01

** These examinations are not for a repair area. These UT examinations were requested by the responsible Engineer as the initial base line UT thickness readings for the defined augmented examinations in the drywell seal area. The drywell concrete to steel moisture barrier was in the process of being replaced and as a result, the lower 6" of steel containment to floor had the paint removed to clean metal in preparation for the seal replacement. The low points in the one-foot by one-foot grids typically occurred in the lower 6" areas. All low point thickness' identified are bounded by evaluation VYM 99/139 and are acceptable without further evaluations.
RC 10/11/01

Component Temperature: 75 F°

Examiner: Mark E Malia MARK E MALIA Level: II Date: 5-9-01
Examiner: Robert B. Birkbeck Robert B. Birkbeck Level: IIL Date: 5/9/01
Reviewer: SLP Tong Date: 5.10.01
** Cog. Engineer: Responsible Engineer Date: 5/11/01
ANII: Date: 5-11-01

Evaluation Required: ***
Yes (✓) No ( )

Form Number:
VYNEF8053.01
Page 1 of 1
NE 8053 Original
LPC # 1

Experience Hours Credit: _____

*** See explanation provided above. Accept as is. Responsible Engineer 5/11/01

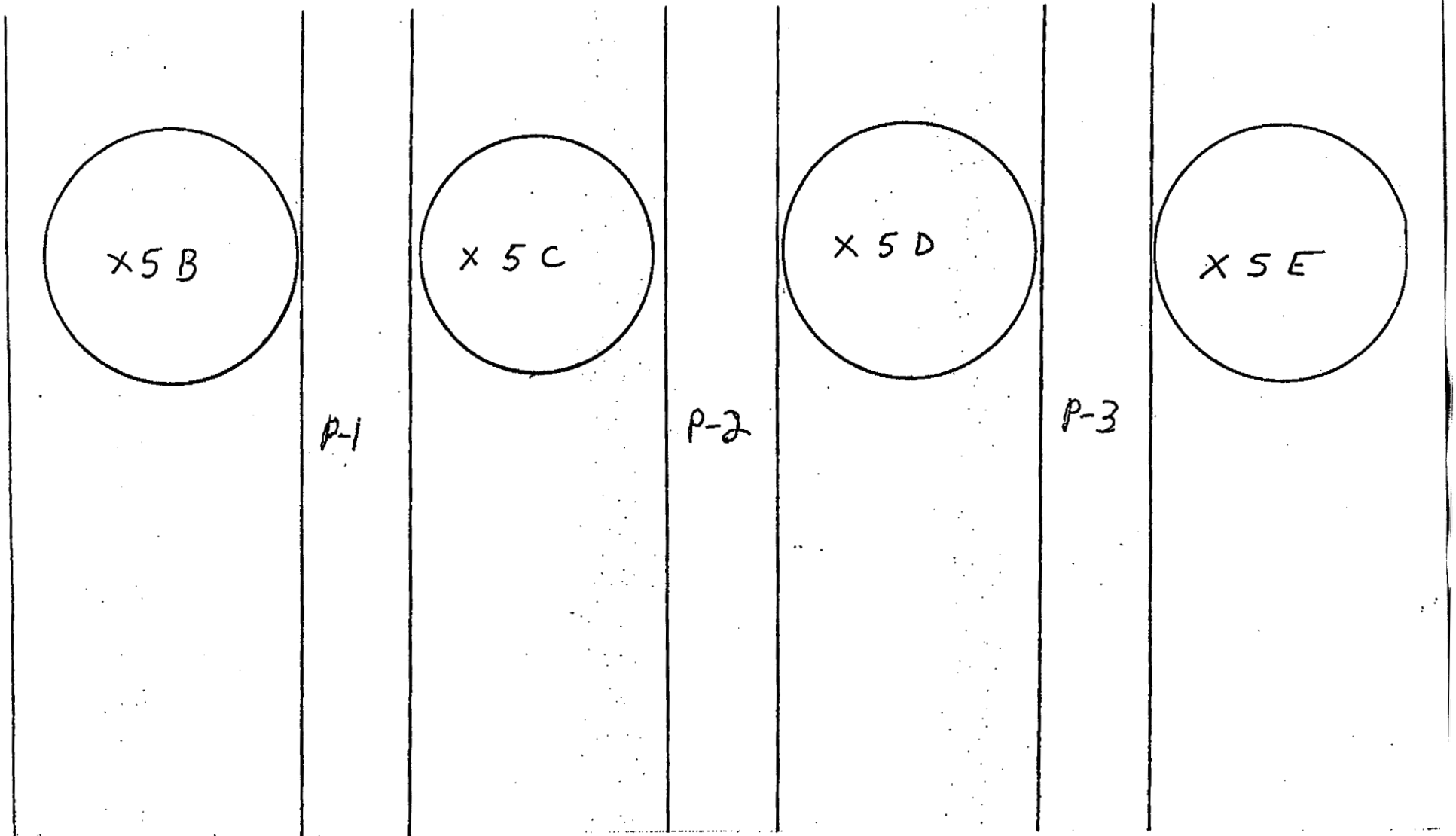

2.525		
2.531		
2.517		
2.527		
2.529		
2.528		
2.530		
2.537		
2.553		
2.551		
2.549		
2.549		
0.996		
1.001		
1.001		
0.997		
0.976		
0.999		
2.498		
2.491		
2.490		

DATA SHEET NO. 8053-01-064
PAGE 2 OF 2

Mark E Malia LV II 5/9/01

Todd B Eichholz LV III 5/9/01

REVIEW: [signature] 5.10.01

Vermont Yankee
Visual Examination Report Form
VT-1, Containment Surfaces (IWE)

Data Sheet No: 8045-01-019

Work Order No.: 00-5037

Procedure No/Rev.: NE 8045 REV. 1

Page 1 of 6 Date: 5-9-01

Component

Component ID: PRIMARY CONTAINMENT

System: PRIMARY CONTAINMENT SEAL INTERFACE AREA ELEV. 238'

Drawing No/Rev.: 6202-2

Visual Aids			Illumination Level Check		
☐ Mirror	■ Illumination Card/No. VV 8			Time	Date
■ Light Source (Describe) FLASHLIGHT	■ Other: V-WAC GUAGE DEARMAN GUAGE		Initial 243 FC	9:10 AM	5-9-01
Method	Photo	Sketch	Intermediate 198 FC	11:00 AM	5-9-01
■ Direct	☐ None	☐ None	Intermediate 177 FC	1:30 PM	5-9-01
☐ Remote	■ Attached	■ Attached	Final 96 FC	4:00 PM	5-9-01

Remote Examination Conditions/Equipment Remarks

LIGHT METER NO.: 812153
DUE: 4-13-02

	Acceptable	Recordable	N/A	Remarks/Observations
Cracks/Linears	J.E. 5-9-01			SEE ATTACHED PAGES 2 thru
Physical Damage	J.E. 5-9-01			6.
Corrosion			J.E. 5-9-01	EXAM CATAGORY E-C.
Erosion	J.E. 5-9-01			AUGMENTED EXAM.
Gouges	J.E. 5-9-01			EXAMS PERFORMED AFTER
Wear			J.E. 5-9-01	NEEDLE GUNNING AND
Arc Strikes			J.E. 5-9-01	SAND BLASTING. 0° thru 360°
Other (Explain)			J.E. 5-9-01	Jed El-Hajj II 5-9-01

Examiner: Jed El-Hajj Level: II Date: 5-9-01

Examiner: N/A Level: N/A Date: N/A

Reviewer: Rafe Cornell Responsible Engineer Date: 5/11/01

Reviewer: N/A Date: N/A

ANII: [signature] Date: 5-11-01

Evaluation Required?

☒ Yes ☐ No

See attached Evaluation LC 10/11/01

Vermont Yankee
Visual Examination
Supplemental Report Form

Reference Data Sheet No: 8045-01-019
Page 2 of 6 Date: 5-9-01

Component

Component ID: PRIMARY CONTAINMENT System: SEAL INTERFACE AREA ELEV. 238' PRIMARY CONTAINMENT

SCOPE OF INSPECTION: SEAL INTERFACE AREA.
THE FOLLOWING AREAS OF PITTING WAS NOTED DURING INSPECTION.
THE PITTING NOTED IS LOCATED IN THE GROUT AREA.
2½" THICK PRIMARY CONTAINMENT LINER PLATE BELOW X-5A EXHIBITS 60% OF GROUT AREA PITTED, WITH 40% OF PITTS TOUCHING.
1" THICK PRIMARY CONTAINMENT LINER PLATE BETWEEN X-5A AND X-5B EXHIBITS 70% OF GROUT AREA PITTED, WITH 80% OF PITTS TOUCHING.
2½" THICK PRIMARY CONTAINMENT LINER PLATE BELOW X-5B EXHIBITS 80% OF GROUT AREA PITTED, WITH 60% OF PITTS TOUCHING.
1" THICK PRIMARY CONTAINMENT LINER PLATE BETWEEN X-5B AND X-5C EXHIBITS 80% OF GROUT AREA PITTED, WITH 80% OF PITTS TOUCHING.
2½" THICK PRIMARY CONTAINMENT LINER PLATE BELOW X-5C EXHIBITS 60% OF GROUT AREA PITTED, WITH 70% OF PITTS TOUCHING.
1" THICK PRIMARY CONTAINMENT LINER PLATE BETWEEN X-5C AND X-5D EXHIBITS 70% OF GROUT AREA PITTED, WITH 70% OF PITTS TOUCHING.
2½" THICK PRIMARY CONTAINMENT LINER PLATE BELOW X-5D EXHIBITS 20% OF GROUT AREA PITTED, WITH 80% OF PITTS TOUCHING.
1" THICK PRIMARY CONTAINMENT LINER PLATE BETWEEN X-5D AND X-5E EXHIBITS 50% OF GROUT AREA PITTED, WITH 80% OF PITTS TOUCHING.
2½" THICK PRIMARY CONTAINMENT LINER PLATE BELOW X-5E EXHIBITS 80% OF GROUT AREA PITTED, WITH 70% OF PITTS TOUCHING.

Examiner: Ted El-Hajj Level: II Date: 5-9-01
Examiner: N/A Level: N/A Date: N/A
Reviewer: [signature] Date: 5/11/01
Reviewer: N/A Date: N/A
ANII: [signature] Date: 5-11-01

Vermont Yankee
Visual Examination
Supplemental Report Form

Reference Data Sheet No: 8045-01-019
Page 3 of 6 Date: 5-9-01

Component ID: PRIMARY CONTAINMENT
Component: SEAL INTERFACE AREA ELEV. 238'
System: PRIMARY CONTAINMENT

1" THICK PRIMARY CONTAINMENT LINER PLATE BETWEEN X-5E AND X-5F EXHIBITS 80% of GROUT AREA PITTED, WITH 80% of PITTS TOUCHING.
2½" THICK PRIMARY CONTAINMENT LINER PLATE BELOW X-5F EXHIBITS 50% of GROUT AREA PITTED, WITH 40% of PITTS TOUCHING.
1" THICK PRIMARY CONTAINMENT LINER PLATE BETWEEN X-5F AND X-5G EXHIBITS 40% of GROUT AREA PITTED, WITH 20% of PITTS TOUCHING.
2½" THICK PRIMARY CONTAINMENT LINER PLATE BELOW X-5G EXHIBITS 70% of GROUT AREA PITTED, WITH 80% of PITTS TOUCHING.
1" THICK PRIMARY CONTAINMENT LINER PLATE BETWEEN X-5G AND X-5H EXHIBITS 60% of GROUT AREA PITTED, WITH 40% of PITTS TOUCHING.
2½" THICK PRIMARY CONTAINMENT LINER PLATE BELOW X-5H EXHIBITS 20% of GROUT AREA PITTED, WITH 50% of PITTS TOUCHING.
1" THICK PRIMARY CONTAINMENT LINER PLATE BETWEEN X-5H AND X-5A EXHIBITS 70% of GROUT AREA PITTED, WITH 50% of PITTS TOUCHING.
THE ABOVE FINDINGS WERE NOTED AFTER NEEDLE GUNNING AND SAND BLASTING.
PITTS RANGED IN SIZE FROM PIN HEADS THROUGH SEVERAL FEET OF SURFACE WASTAGE.
NONE of THE ABOVE VIOLATED 10% MATERIAL THICKNESS. Page 4 of Report, Documents Deepest PITT SIZE.
SEE Page 5 of Report FOR AREA OF CONCRETE BROKEN BELOW GROUT AREA.
SEE Page 6 of Report FOR AREA of PRIMARY CONTAINMENT WITH CORROSION WASTAGE BELOW FLOOR SURFACE.
AREA Referred to in this Report AS "GROUT AREA" is the AREA At the JOINT SEAL Interface.

Examiner: Ted El-Najj. Level: II Date: 5-9-01
Examiner: N/A Level: N/A Date: N/A
Reviewer: [signature] Date: ~~10/11/01~~ 5/11/01
Reviewer: N/A Date: N/A
ANII: [signature] Date: 5-11-01

VYNEF 8045.04
NE 8045 Original
Page 1 of 1
LPC #1

REFERENCE DATA SHEET No. 8045-01-019
PAGE 4 of 6 DATE 5-9-01

SCOPE OF THIS INSPECTION: DOCUMENT THE Deepest PITT LOCATED IN THE SANDBLASTED AREA. 360°:
PLEASE NOTE BELOW DIMENSIONS OF THE Deepest PITTS ON 2½" AND 1" THICK PLATES.
NONE OF THESE AREAS VIOLATE 10% OF PLATE WALL THICKNESS.
VERIFIED USING V-WAC AND DEARMAN UNDERCUT Gauge.
NOTE: 3/32" Deep PITT ON 1" PLATE BETWEEN X-5H AND X-5A IS NOT OVERLAPPED BY OTHER PITTS.
Ted El-Hajj. II 5-9-01

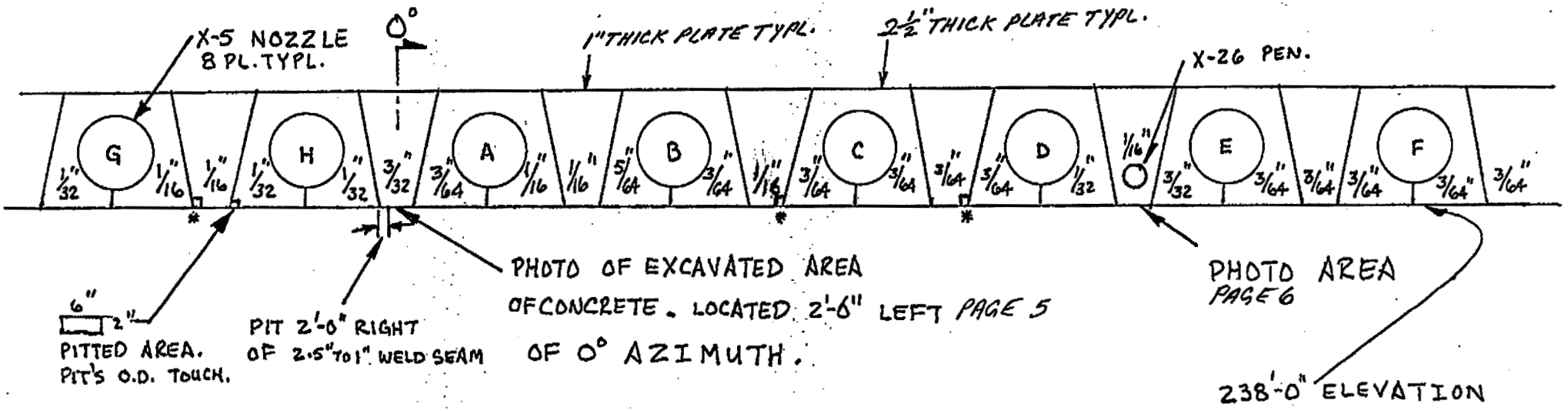

* PREVIOUS UT DATA AREAS

ELEV. VIEW FROM INSIDE

[illegible] 5-11-01

REFERENCE DATA SHEET NO. 8045-01-019
PAGE 5 OF 6 DATE 5-9-01

AREA LOCATED 2'6" LEFT OF 0°

NO PITTS IN THIS AREA EXCEEDED 10% OF WALL THICKNESS.
TOTAL AREA REVEALED LESS PITTING THE FUTHER DOWN FROM GROUT BELT.

Jed El-Hajj. 5-9-01 Level II

[illegible] ANI 5-11-01

REFERENCE DATA SHEET NO. 8045-01-019
PAGE 6 OF 6 DATE 5-9-01

AREA LOCATED BELOW X-26 PENETRATION ON RIGHT

UNABLE TO USE V-WAC OR DEARMAN UNDERCUT GUAGE IN THIS AREA. USED 1/32" THICK PLASTIC SHIM, WHICH FILLED AREA, FLUSH. NOT BELOW MINIMUM WALL.

Ted El-Hajj. LEVEL II 5-9-01

W Schlau ANI 5-11-01

EVALUATION OF DATA PROVIDED BY VT-1, CONTAINMENT SURFACES (IWE)
DATA SHEET No: 8045-01-019

During RFO 21 IWE examinations it was discovered that the Joint Seal at the concrete to steel interface on the 238' level of the containment had failed and there was evidence of corrosion in areas of the seal. As a result a portion of the circumference of the seal interface area was declared as augmented. The joint seal itself was also scheduled for replacement during RFO-22.

At the start of RFO-22 the examiners performed the required VT-1 examinations of the augmented area at the joint seal to determine if any changes had occurred during the last operating cycle. The results of that examination reveal no changes identified in the augmented area.

After the VT-1 examinations were complete the process began for the joint seal replacement. A band of paint was removed from the concrete floor up the steel containment approximately 6" wide for the full circumference. The recessed area for the joint seal was also cleaned in preparation for the new seal installation. At this point a VT-3 examinations was performed which identified a band of pitting that covered much of the 360-degree circumference. A more detailed VT-1 was ordered by the Responsible Engineer to detail this area prior to paint/seal installation.

This joint seal area was identified as an issue in the early 1990's. (ER-99-1594 deals with the issues from the 1990's resolution.). In 1993 the joint seal area was cleaned and painted so as to form a paint joint seal at the concrete to seal interface. The areas identified during the RFO-21 examinations were areas that were experiencing evidence of corrosion and paint loss in this painted joint area. Some of the paint was still intact and providing adequate protection for the steel it was covering.

The new areas of pitting in the area of the joint seal are as a result of the coating removal to white metal in this area. This area was not previously identified during RFO-21 because it was an old area of pitting that had been covered by the 1993 coating and had not experienced any further degradation. As a result of the coatings being completely removed from this joint area, this VT-1 examination was able to map this region without the impedance of any obstruction.

The areas of pitting are isolated to the general area of the joint seal interface between the concrete and the steel. The pitting subsides as it move up or down out of the joint seal area. This was evident when a portion of the steel surface was exposed as a result of the removal of a concrete chip. The under surface area exposed was approximately 9" wide and 3" deep in a crescent shape. The worst case pitting is isolated to a band in the joint seal area from approximately ¼" wide to approximately 1" wide and is described in the report as areas with general wastage and connected pitting. All corrosion identified within this report is bounded by evaluation VYM 99/139. Based on this evaluation all areas are well within the required design base metal thicknesses and are acceptable for continued operation as is.

Ralph Connell
IWE Responsible Engineer
May 11, 2001

Data Sheet No: 8047-01-079

Work Order No.: 00-005037-000

Procedure No/Rev.: NE8047 LPC No. 1

Page 1 of 1 Date: 5-14-01

Vermont Yankee
Visual Examination Report Form for VT-3 Moisture Barriers, Gaskets and Seals (IWE)

Component ID: PRIMARY CONTAINMENT SEAL INTERFACE AREA ELEV. 238' Component

Drawing No/Rev.: 6202-2

Visual Aids	Illumination Level Check			Photo/Sketch
☐ Magnifier ■ Light Source (Describe) FLASHLIGHT		Time	Date	■ None
☐ Mirror ■ Other: LIGHT METER NO. 812153 DUE 4-13-02	Initial 158 FC	7:40 AM	5-14-01	
	Intermediate	N/A	N/A	
	Intermediate	N/A	N/A	☐ Attached
■ Illumination Card/Number VY8	Final 135 FC	8:45 AM	5-14-01	

	Acceptable	Recordable	N/A	Remarks
Deformation	J.E. 5-14-01			SCOPE OF INSP. CATAGORY
Cracking	J.E. 5-14-01			EA, and EB. NEW
Discoloration	J.E. 5-14-01			PAINT, NEW SEAL ON
Wear	J.E. 5-14-01			REFURBISHED SEAL/
Erosion	J.E. 5-14-01			MOISTURE BARRIER
Corrosion	J.E. 5-14-01			AREA. J.E. 5-14-01
Tears	J.E. 5-14-01			
Gaps/Missing Sections	J.E. 5-14-01			
Pitting		①	J.E. 5-14-01	① PREVIOUSLY ADDRESSED
Gouges		①	J.E. 5-14-01	ON REPORT NO. 8045-01-
Dents		①	J.E. 5-14-01	019. J.E. 5-14-01
Other (Describe):			J.E. 5-14-01	

Examiner: Ted El-Hajj Level II Date 5-14-01

Examiner: N/A Level N/A Date N/A

Reviewer: [signature] Date 5/14/01

Reviewer: N/A Date N/A

ANII: [signature] Date 5-14-01

Evaluation Required? ☐ Yes ■ No

Data Sheet No: 8047-01-073 (01 / 9PBS-10-01)

Work Order No.: 00-005037-000

Procedure No/Rev.: NE 8047 Rev. 0

Page 1 of 1 Date: 5-9-01

Vermont Yankee
Visual Examination Report Form for VT-3 Containment Surfaces (IWE)

Component: SEAL INTERFACE AREA ELEV. 238'

Component ID: PRIMARY CONTAINMENT Drawing No/Rev.: 6202-2 R/0

Visual Aids	Illumination Level Check			Photo/Sketch
☐ Binoculars ■ Light Source (Describe) FLASHLIGHT		Time	Date	■ None
	Initial 179 FC	7:30 AM	5-9-01	
☐ Mirror ■ Other: LIGHT METER NO. 812153 DUE - 4-13-02	Intermediate	N/A	N/A	
	Intermediate	N/A	N/A	☐ Attached
■ Illumination Card/Number VY 8	Final 143 FC	8:45 AM	5-9-01	

Coated Surface? ☐ Yes ■ No	Acceptable	Recordable	N/A	Remarks
Cracking	J.E. 5-9-01			SCOPE OF INSP.: SEAL
Flaking			J.E. 5-9-01	INTERFACE AREA. GROUT
Blistering			J.E. 5-9-01	HAS BEEN REMOVED AND
Peeling			J.E. 5-9-01	AREA SAND BLASTED to
Wear	J.E. 5-9-01			CLEAN METAL.
Discoloration			J.E. 5-9-01	PITTING EXISTS BELOW
Pitting		J.E. 5-9-01		AND WHERE GROUT
Corrosion	J.E. 5-9-01			PREVIOUSLY INTERFACED
Arc Strikes	J.E. 5-9-01			WITH PRIMARY CONTAIN-
Gouges	J.E. 5-9-01			MENT. PITTING depth is
Dents	J.E. 5-9-01			indeterminate. Request
Deformation	J.E. 5-9-01			Engineering Evaluation.
Other (Describe):			J.E. 5-9-01	

Examiner: Ted El-Hajj Level II Date 5-9-01

Examiner: N/A Level N/A Date N/A

** Reviewer: [signature] Date 5/11/01

Reviewer: N/A Date N/A

ANII: [signature] Date 5-11-01

Evaluation Required? ☐ Yes ☒ No

See below

** The information provided is not detailed enough. VT-1 exams of this Area have been requested and will document the areas of pitting for review.

Vermont Yankee
Visual Examination Report Form for General Visual (IWE)

Data Sheet No: IWE-GV-353

Work Order No.: 00-05035

Procedure No/Rev.: NE 8047/original

Page 1 of 1 Date: 10/16/00

Component

Component ID: Torus Bays 1-4 System: Containment

Drawing No/Rev.: 5920-42 R13 Location: Rx Bldg

Visual Aids	Photo	Sketch	Method
☐ Binoculars	☑ None	☑ None	☑ Direct
☐ Mirror	☐ Attached	☐ Attached	☐ Remote
☑ Light Source	Examination Location Description/Remarks	Remote Examination Conditions/Equipment Remarks	
☐ 6" Scale	Examination is from Catwalk down to Belt Line on outer Exterior Surface	N/A	
☐ Other			

Examination Results, Details and Comments:

Performed General Visual Examination of Torus Bays 1, 2, 3 + 4 from catwalk to belt line on exterior outer surface of Torus. The results are satisfactory.

Examiner: [signature] Level Responsible Engineer Date 10/16/00

Examiner: Level Date

Reviewer: Date

Reviewer: [signature] Date 10/16/00

ANII: [signature] Date 10/19/00

Data Sheet No: IWE - GV - 354

Work Order No.: 00 - 05035

Procedure No/Rev.: NE 8047/original

Page 1 of 1 Date: 10/16/00

Vermont Yankee
Visual Examination Report Form for General Visual (IWE)

Component

Component ID: Torus Bays 5-8 System: Containment

Drawing No/Rev.: 5920-42 R13 Location: Rx Bldg

Visual Aids	Photo	Sketch	Method
☐ Binoculars	☑ None	☑ None	☑ Direct
☐ Mirror	☐ Attached	☐ Attached	☐ Remote
☑ Light Source	Examination Location Description/Remarks	Remote Examination Conditions/Equipment Remarks	
☐ 6" Scale	Examination is from Catwalk down to Belt Line on outer Exterior Surface	N/A	
☐ Other			

Examination Results, Details and Comments:

Performed General Visual Examination of Torus Bays 5, 6, 7 + 8 from catwalk to belt line on exterior outer surface of Torus. The results are satisfactory.

Examiner: [signature] Level Responsible Engineer Date 10/16/00

Examiner: Level Date

Reviewer: Date

Reviewer: [signature] Date 10/16/00

ANII: [signature] Date 10-19-00

Data Sheet No: IWE-GV-355

Work Order No.: 00-05035

Procedure No/Rev.: NE 8047/original

Page 1 of 1 Date: 10/16/00

Vermont Yankee
Visual Examination Report Form for General Visual (IWE)

Component

Component ID: Torus Bays 9-12 System: Containment

Drawing No/Rev.: 5920-42 R13 Location: Rx Bldg

Visual Aids	Photo	Sketch	Method
☐ Binoculars	☑ None	☑ None	☑ Direct
☐ Mirror	☐ Attached	☐ Attached	☐ Remote
☑ Light Source	Examination Location Description/Remarks	Remote Examination Conditions/Equipment Remarks	
☐ 6" Scale	Examination is from Catwalk down to Belt Line on outer Exterior Surface	N/A	
☐ Other			

Examination Results, Details and Comments:

Performed General Visual Examination of Torus Bays 9, 10, 11 + 12 from catwalk to belt line on exterior outer surface of Torus. The results are satisfactory.

Examiner: [signature] Level Responsible Engineer Date 10/16/00

Examiner: Level Date

Reviewer: Date

Reviewer: [signature] Date 10/16/00

ANII: [signature] Date 10-19-00

Data Sheet No: IWE-GU-356

Work Order No.: 00-05035

Procedure No/Rev.: NE 8047/original

Page 1 of 1 Date: 10/16/00

Vermont Yankee
Visual Examination Report Form for General Visual (IWE)

Component

Component ID: Torus Bays 13-16 System: Containment

Drawing No/Rev.: 5920-42 R13 Location: Rx Bldg

Visual Aids	Photo	Sketch	Method
☐ Binoculars	☑ None	☑ None	☑ Direct
☐ Mirror	☐ Attached	☐ Attached	☐ Remote
☑ Light Source	Examination Location Description/Remarks	Remote Examination Conditions/Equipment Remarks	
☐ 6" Scale	Examination is from Catwalk down to Belt line on outer Exterior Surface	N/A	
☐ Other			

Examination Results, Details and Comments:

Performed General Visual Examination of Torus Bays 13, 14, 15 + 16 from catwalk to belt line on exterior outer surface of Torus. The results are satisfactory.

Examiner: Ralph Cannell Level Responsible Engineer Date 10/16/00

Examiner: Level Date

Reviewer: Date

Reviewer: Ralph Cannell Date 10/16/00

ANII: [illegible] Date 10-19-00

Data Sheet No: IWE-GV-357

Work Order No.: 00-05035

Procedure No/Rev.: NE 8047/original

Page 1 of 1 Date: 10/16/00

Vermont Yankee
Visual Examination Report Form for General Visual (IWE)

Component

Component ID: Torus Penetration X 209 A+D System: Containment

Drawing No/Rev.: 5920-42 R13 Location: Rx Building

Visual Aids	Photo	Sketch	Method
☐ Binoculars	☑ None	☑ None	☑ Direct
☐ Mirror	☐ Attached	☐ Attached	☐ Remote
☑ Light Source	Examination Location Description/Remarks	Remote Examination Conditions/Equipment Remarks	
☐ 6" Scale	Exterior Surface of Penetration X209 A+D	N/A	
☐ Other			

Examination Results, Details and Comments:

Performed General Visual Examination on X209 A and D with Satisfactory Results.

Examiner: Ralph Connell Level Responsible Engineer Date 10/16/00

Examiner: Level Date

Reviewer: Date

Reviewer: Ralph Connell Date 10/16/00

ANII: [illegible] Date 10-19-00

Data Sheet No: IWE - GV - 358

Work Order No.: 00-05035

Procedure No/Rev.: NE 8047/original

Page 1 of 1 Date: 10/16/00

Vermont Yankee
Visual Examination Report Form for General Visual (IWE)

Component

Component ID: Torus Penetration X 231 A, C, + E System: Containment

Drawing No/Rev.: 5920-42 R13 and 6202-2D Location: Rx Building

Visual Aids	Photo	Sketch	Method
☐ Binoculars	☑ None	☑ None	☑ Direct
☐ Mirror	☐ Attached	☐ Attached	☐ Remote
☑ Light Source	Examination Location Description/Remarks	Remote Examination Conditions/Equipment Remarks	
☐ 6" Scale	Exterior Surface of Penetration X 231 A, C, + E	N/A	
☐ Other			

Examination Results, Details and Comments:

Performed General Visual Examinations on X 231 A, C, and E with satisfactory Results. Note. 5920-42 R13 not revised yet to Reflect X231 penetrations.

Examiner: [signature] Level Responsible Engineer Date 10/16/00

Examiner: Level Date

Reviewer: Date

Reviewer: [signature] Date 10/16/00

ANII: [signature] Date 10.19.00

Data Sheet No: IWE-GV-359

Work Order No.: 00-05035

Procedure No/Rev.: NE 8047/original

Page 1 of 1 Date: 10/16/00

Vermont Yankee
Visual Examination Report Form for General Visual (IWE)

Component

Component ID: Torus Penetration X206 A + D System: Containment

Drawing No/Rev.: 5920-42 R13 Location: Rx Building

Visual Aids	Photo	Sketch	Method
☐ Binoculars	☑ None	☑ None	☑ Direct
☐ Mirror	☐ Attached	☐ Attached	☐ Remote
☑ Light Source	Examination Location Description/Remarks	Remote Examination Conditions/Equipment Remarks	
☐ 6" Scale	Exterior Surface of Penetration X 206 A + D	N/A	
☐ Other			

Examination Results, Details and Comments:

Performed General Visual Examination on X206 A and D with satisfactory Results.

Examiner: [signature] Level Responsible Engineer Date 10/16/00

Examiner: Level Date

Reviewer: Date

Reviewer: [signature] Date 10/16/00

ANII: [signature] Date 10/19/00

Vermont Yankee
Visual Examination Report Form
VT-1, Bolting (IWE)

Data Sheet No: 8045-01-01
Work Order No.: 00-005035-00
Procedure No/Rev.: NE 8045 R/0
Page 1 of 1 Date: 4.19.01

Component

Component ID: V16-19-5A System: PCAC

Drawing No/Rev.: G-191175 Sh. 1 R/63 Bolting Length: N/A " Bolting Diameter: N/A "

Photo/Sketch	Method	Examination	Bolting Components Examined	
☑ None	☑ Direct	☑ In Place	☑ Bolting	☐ Washers
☐ Attached	☐ Remote	☐ Removed	☐ Bushings	☐ Flange Surface

Visual Aids

☐ Magnifying Glass ☑ Illumination Card/No.: V4-5
☑ Mirror ☑ Light Source (Describe): PELICAN LIGHT

Remote Examination Conditions/Limitations: N/A

Illumination Level Check	Time	Date
Initial	12:20	4.19.01
Intermediate	N/A	N/A
Intermediate	N/A	N/A
Final	13:45	4.19.01

Lightmeter S/N: 4593804
Cal. Due Date: 4.13.02

	Acceptable	Recordable	N/A	Remarks/Observations
Loose/Missing	✓	N/A	N/A	N/A
Thread Engagement	✓			
Thread Damage	✓			
Galling	✓			
Coating Degradation	✓			
Bent/Twisted	✓			
Physical Damage	✓			
Fractured Parts	✓			
Gouges	✓			
Cracks/Linears	✓			
Corrosion	✓			
Erosion	✓			
Wear	✓			
Evidence of Leakage	✓			
Other (Explain)	N/A	N/A	✓	

Examiner: [signature] Level: III Date: 4.19.01
Examiner: N/A Level: N/A Date: N/A
Reviewer: [signature] Date: 4/24/01
Reviewer: Date:
ANII: [signature] Date: 4-24-01

Evaluation Required?
☐ Yes ☑ No

Vermont Yankee
Visual Examination Report Form
VT-1, Bolting (IWE)

Data Sheet No: 8045-01-02
Work Order No.: 00-005035-00
Procedure No/Rev.: NE 8045 R/0
Page 1 of 1 Date: 4·19·01

Component

Component ID: V16-19-5B System: PCAC

Drawing No/Rev.: G-191175 Sh. 1 R/63 Bolting Length: N/A " Bolting Diameter: N/A "

Photo/Sketch	Method	Examination	Bolting Components Examined	
☑ None	☑ Direct	☑ In Place	☑ Bolting	☐ Washers
☐ Attached	☐ Remote	☐ Removed	☐ Bushings	☐ Flange Surface

Visual Aids

☐ Magnifying Glass ☑ Illumination Card/No.: V4-5
☑ Mirror ☑ Light Source (Describe): PELICAN LIGHT

Remote Examination Conditions/Limitations: N/A

Illumination Level Check

	Time	Date
Initial	12:20	4·19·01
Intermediate	N/A	N/A
Intermediate	N/A	N/A
Final	13:45	4·19·01

Lightmeter S/N: 4593804
Cal. Due Date: 4·13·02

	Acceptable	Recordable	N/A	Remarks/Observations
Loose/Missing	✓	N/A	N/A	N/A
Thread Engagement	✓			
Thread Damage	✓			
Galling	✓			
Coating Degradation	✓			
Bent/Twisted	✓			
Physical Damage	✓			
Fractured Parts	✓			
Gouges	✓			
Cracks/Linears	✓			
Corrosion	✓			
Erosion	✓			
Wear	✓			
Evidence of Leakage	✓			
Other (Explain)	N/A	N/A	✓	

Examiner: [signature] Level: III Date: 4·19·01
Examiner: N/A Level: N/A Date: N/A
Reviewer: [signature] Date: 4/24/01
Reviewer: Date:
ANII: [signature] Date: 4-24-01

Evaluation Required?
☐ Yes ☑ No

Vermont Yankee
Visual Examination Report Form
VT-1, Bolting (IWE)

Data Sheet No: (V16-19-5C) 8045-01-03
Work Order No.: 00-005035-00
Procedure No/Rev.: NE 8045 R/0
Page 1 of 1 Date: 4.19.01

Component

Component ID: V16-19-5C System: PCAC

Drawing No/Rev.: G-191175 Sh. 1 R/63 Bolting Length: N/A " Bolting Diameter: N/A "

Photo/Sketch	Method	Examination	Bolting Components Examined	
☑ None	☑ Direct	☑ In Place	☑ Bolting	☐ Washers
☐ Attached	☐ Remote	☐ Removed	☐ Bushings	☐ Flange Surface

Visual Aids

☐ Magnifying Glass ☑ Illumination Card/No.: V4-5
☑ Mirror ☑ Light Source (Describe): PELICAN LIGHT

Remote Examination Conditions/Limitations: N/A

Illumination Level Check	Time	Date
Initial	12:20	4.19.01
Intermediate	N/A	N/A
Intermediate	N/A	N/A
Final	13:45	4.19.01

Lightmeter S/N: 4593804
Cal. Due Date: 4.13.02

	Acceptable	Recordable	N/A	Remarks/Observations
Loose/Missing	✓	N/A	N/A	N/A
Thread Engagement	✓			
Thread Damage	✓			
Galling	✓			
Coating Degradation	✓			
Bent/Twisted	✓			
Physical Damage	✓			
Fractured Parts	✓			
Gouges	✓			
Cracks/Linears	✓			
Corrosion	✓			
Erosion	✓			
Wear	✓			
Evidence of Leakage	✓			
Other (Explain)	N/A	N/A	✓	

Examiner: [signature] Level: III Date: 4.19.01
Examiner: N/A Level: N/A Date: N/A
Reviewer: [signature] Date: 4/24/01
Reviewer: Date:
ANII: [signature] Date: 4-24-01

Evaluation Required?
☐ Yes ☑ No

Vermont Yankee
Visual Examination Report Form
VT-1, Bolting (IWE)

Data Sheet No: 8045-01-04
Work Order No.: 00-005035-00
Procedure No/Rev.: NE 8045 R/0
Page 1 of 1 Date: 4·19·01

Component

Component ID: V16-19-5D System: PCAC

Drawing No/Rev.: G-191175 Sh. 1 R/63 Bolting Length: N/A " Bolting Diameter: N/A "

Photo/Sketch	Method	Examination	Bolting Components Examined	
☑ None	☑ Direct	☑ In Place	☑ Bolting	☐ Washers
☐ Attached	☐ Remote	☐ Removed	☐ Bushings	☐ Flange Surface

Visual Aids

☐ Magnifying Glass ☑ Illumination Card/No.: V4-5
☑ Mirror ☑ Light Source (Describe): PELICAN LIGHT

Remote Examination Conditions/Limitations: N/A

Illumination Level Check	Time	Date
Initial	12:20	4·19·01
Intermediate	N/A	N/A
Intermediate	N/A	N/A
Final	13:45	4·19·01

Lightmeter S/N: L593804
Cal. Due Date: 4·13·02

	Acceptable	Recordable	N/A	Remarks/Observations
Loose/Missing	✓	N/A	N/A	N/A
Thread Engagement	✓			
Thread Damage	✓			
Galling	✓			
Coating Degradation	✓			
Bent/Twisted	✓			
Physical Damage	✓			
Fractured Parts	✓			
Gouges	✓			
Cracks/Linears	✓			
Corrosion	✓			
Erosion	✓			
Wear	✓			
Evidence of Leakage	✓			
Other (Explain)	N/A	N/A	✓	

Examiner: [signature] Level: III Date: 4·19·01
Examiner: N/A Level: N/A Date: N/A
Reviewer: [signature] Date: 4/24/01
Reviewer: Date:
ANII: [signature] Date: 4-24-01

Evaluation Required?
☐ Yes ☑ No

Vermont Yankee
Visual Examination Report Form
VT-1, Bolting (IWE)

Data Sheet No: 8045-01-05
Work Order No.: 00-005035-00
Procedure No/Rev.: NE 8045 R/0
Page 1 of 1 Date: 4.19.01

Component

Component ID: V16-19-5E System: PCAC

Drawing No/Rev.: G-191175 Sh. 1 R/63 Bolting Length: N/A " Bolting Diameter: N/A "

Photo/Sketch	Method	Examination	Bolting Components Examined	
☑ None	☑ Direct	☑ In Place	☑ Bolting	☐ Washers
☐ Attached	☐ Remote	☐ Removed	☐ Bushings	☐ Flange Surface

Visual Aids

☐ Magnifying Glass ☑ Illumination Card/No.: V4-5
☑ Mirror ☑ Light Source (Describe): PELICAN LIGHT

Remote Examination Conditions/Limitations: N/A

Illumination Level Check	Time	Date
Initial	12:20	4.19.01
Intermediate	N/A	N/A
Intermediate	N/A	N/A
Final	13:45	4.19.01

Lightmeter S/N: L593804
Cal. Due Date: 4.13.02

	Acceptable	Recordable	N/A	Remarks/Observations
Loose/Missing	✓	N/A	N/A	N/A
Thread Engagement	✓			
Thread Damage	✓			
Galling	✓			
Coating Degradation	✓			
Bent/Twisted	✓			
Physical Damage	✓			
Fractured Parts	✓			
Gouges	✓			
Cracks/Linears	✓			
Corrosion	✓			
Erosion	✓			
Wear	✓			
Evidence of Leakage	✓			
Other (Explain)	N/A	N/A	✓	

Examiner: [signature] Level: III Date: 4.19.01
Examiner: N/A Level: N/A Date: N/A
Reviewer: [signature] Date: 4/24/01
Reviewer: Date:
ANII: [signature] Date: 4-24-01

Evaluation Required?
☐ Yes ☑ No

Vermont Yankee
Visual Examination Report Form
VT-1, Bolting (IWE)

Data Sheet No: 8045-01-06
Work Order No.: 00-005035-00
Procedure No/Rev.: NE 8045 R/0
Page 1 of 1 Date: 4.19.01

Component

Component ID: V16-19-5F System: PCAC

Drawing No/Rev.: G-191175 Sh. 1 R/63 Bolting Length: N/A " Bolting Diameter: N/A "

Photo/Sketch	Method	Examination	Bolting Components Examined	
☑ None	☑ Direct	☑ In Place	☑ Bolting	☐ Washers
☐ Attached	☐ Remote	☐ Removed	☐ Bushings	☐ Flange Surface

Visual Aids

☐ Magnifying Glass ☑ Illumination Card/No.: V4-5
☑ Mirror ☑ Light Source (Describe): PELICAN LIGHT

Remote Examination Conditions/Limitations: N/A

Illumination Level Check	Time	Date
Initial	12:20	4.19.01
Intermediate	N/A	N/A
Intermediate	N/A	N/A
Final	13:45	4.19.01

Lightmeter S/N: 4593804
Cal. Due Date: 4.13.02

	Acceptable	Recordable	N/A	Remarks/Observations
Loose/Missing	✓	N/A	N/A	N/A
Thread Engagement	✓			
Thread Damage	✓			
Galling	✓			
Coating Degradation	✓			
Bent/Twisted	✓			
Physical Damage	✓			
Fractured Parts	✓			
Gouges	✓			
Cracks/Linears	✓			
Corrosion	✓			
Erosion	✓			
Wear	✓			
Evidence of Leakage	✓			
Other (Explain)	N/A	N/A	✓	

Examiner: [signature] Level: III Date: 4.19.01
Examiner: N/A Level: N/A Date: N/A
Reviewer: [signature] Date: 4/24/01
Reviewer: Date:
ANII: [signature] Date: 4-24-01

Evaluation Required?
☐ Yes ☑ No

Vermont Yankee
Visual Examination Report Form
VT-1, Bolting (IWE)

Data Sheet No: 8045-01-017
Work Order No.: 00-004108-000
Procedure No/Rev.: NE 8045 Rev. 1
Page 1 of 1 Date: 5-7-01

Component

Component ID: V16-19-5G VACUUM BREAKER VALVE System: PRIMARY CONTAINMENT

Drawing No/Rev.: 9-6202 Rev. 0 Bolting Length: STUDS APPX. 4 1/2" Bolting Diameter: 3/4"

Photo/Sketch	Method	Examination	Bolting Components Examined
■ None	■ Direct	■ In Place	■ Bolting ☐ Washers
☐ Attached	☐ Remote	■ Removed	☐ Bushings ■ Flange Surface

Visual Aids

☐ Magnifying Glass ■ Illumination Card/No.: VY8
■ Mirror ■ Light Source (Describe): Flashlight

Remote Examination Conditions/Limitations:

Illumination Level Check	Time	Date
Initial PRE 123 FC	1:45PM	5-7-01
Intermediate	N/A	N/A
Intermediate	N/A	N/A
Final POST 109 FC	2:30PM	5-7-01

Lightmeter S/N: 812153
Cal. Due Date: 4-13-02

	Acceptable	Recordable	N/A	Remarks/Observations
Loose/Missing	J.E. 5-7-01			Verified the following: 20-
Thread Engagement			J.E. 5-7-01	A-194 GR. 2H HHN. 20-3/4"Ø
Thread Damage	J.E. 5-7-01			studs screwed in place at
Galling	J.E. 5-7-01			time of inspection. Top HALF
Coating Degradation	J.E. 5-7-01		J.E. 5-7-01	inspected. Verified accessible
Bent/Twisted	J.E. 5-7-01			flange surface areas, less
Physical Damage	J.E. 5-7-01			threaded stud holes. 5-7-01
Fractured Parts	J.E. 5-7-01			Jed El-Hajj
Gouges	J.E. 5-7-01			
Cracks/Linears	J.E. 5-7-01			
Corrosion	J.E. 5-7-01			
Erosion	J.E. 5-7-01			
Wear	J.E. 5-7-01			
Evidence of Leakage	J.E. 5-7-01			
Other (Explain)			J.E. 5-7-01	

Examiner: Jed El-Hajj Level: II Date: 5-7-01
Examiner: N/A Level: N/A Date: N/A
Reviewer: [signature] Date: 5/8/01
Reviewer: N/A Date: N/A
ANII: [signature] Date: 5-8-01

Evaluation Required?
☐ Yes ■ No

Vermont Yankee Visual Examination Report Form VT-1, Bolting (IWE)	Data Sheet No: 8045-01-014 Work Order No.: 00-004109-000 Procedure No/Rev.: NE 8045 Rev. 1 Page 1 of 1 Date: 5-4-01

Component

Component ID: Valve V16-19-54 System: Torus Vacuum Breaker Ass'y.

Drawing No/Rev.: 9-6202 Rev. 0 Bolting Length: ~~APPR.~~ STUDS 4½" Bolting Diameter: .750"

Photo/Sketch	Method	Examination	Bolting Components Examined	
■ None	■ Direct	■ In Place	■ Bolting	☐ Washers
☐ Attached	☐ Remote	■ Removed	☐ Bushings	■ Flange Surface

Visual Aids

☐ Magnifying Glass ■ Illumination Card/No.: VY8

■ Mirror ■ Light Source (Describe): Flashlight

Remote Examination Conditions/Limitations:

Illumination Level Check	Time	Date
Initial PRE 133FC	3:01PM	5-4-01
Intermediate	N/A	N/A
Intermediate	N/A	N/A
Final POST 117FC	4:47PM	5-4-01

Lightmeter S/N: 812153

Cal. Due Date: 4-13-02

	Acceptable	Recordable	N/A	Remarks/Observations
Loose/Missing	J.E. 5-4-01			Verified the following: 20-A-194 GR. 2H HHN. 20-¾"Ø
Thread Engagement			J.E. 5-4-01	studs screwed in place at
Thread Damage	J.E. 5-4-01			time of inspection. Top Half
Galling	J.E. 5-4-01			inspected. Verified accessible
Coating Degradation			J.E. 5-4-01	flange surface areas, less
Bent/Twisted	J.E. 5-4-01			threaded stud holes. 5-4-01
Physical Damage	J.E. 5-4-01			Jed El-Hajj.
Fractured Parts	J.E. 5-4-01			
Gouges	J.E. 5-4-01			
Cracks/Linears	J.E. 5-4-01			
Corrosion	J.E. 5-4-01			
Erosion	J.E. 5-4-01			
Wear	J.E. 5-4-01			
Evidence of Leakage	J.E. 5-4-01			
Other (Explain)			J.E. 5-4-01	

Examiner: Jed El-Hajj Level: II Date: 5-4-01

Examiner: N/A Level: N/A Date: N/A

Reviewer: [signature] Date: 5/5/01

Reviewer: N/A Date: N/A

ANII: [signature] Date: 5-5-01

Evaluation Required?

☐ Yes ☒ No

Data Sheet No: IWE-GV-398

Work Order No.: 00-005035

Procedure No/Rev.: PP 7024/0

Page 1 of 1 Date: 1/16/01

Vermont Yankee
Visual Examination Report Form for General Visual (IWE)

Component

Component ID: Vent System System: Torus

Drawing No/Rev.: 6202-200 Location: Exterior Surfaces

Visual Aids	Photo	Sketch	Method
☒ Binoculars	☒ None	☒ None	☒ Direct General
☐ Mirror	☐ Attached	☐ Attached	☐ Remote
☒ Light Source	Examination Location Description/Remarks		Remote Examination Conditions/Equipment Remarks
☐ 6" Scale	Vent Lines + Vacuum Breaker Lines for: Torus Bays 2, 4, 6, 8, 10, 12, 14, 16		N/A
☐ Other			

Examination Results, Details and Comments:

Performed General Visual Examination on external surfaces of all Vent lines from X-5 PEN to Torus and all Vacuum Breaker Lines from Torus to Vent line Penetrations with No Findings. Satisfactory.

Examiner: Ralph Connell Level Responsible Engineer Date 1/16/01

Examiner: N/A Level N/A Date N/A

Reviewer: N/A Date N/A

Reviewer: N/A Date N/A

ANII: [signature] Date 1-31-01

Data Sheet No: 8047-01-031

Work Order No.: 00-5037

Procedure No/Rev.: 8047 R0

Page 1 of 9 Date: 5/1/01

Vermont Yankee
Visual Examination Report Form for General Visual (IWE)

Component

Component ID: Vent Header System: Drywell

Drawing No/Rev.: 6202-200 Location: Drywell

Visual Aids	Photo	Sketch	Method
☐ Binoculars	☒ None	☐ None 8 pages	☒ Direct General
☐ Mirror	☐ Attached	☒ Attached	☐ Remote
☒ Light Source	Examination Location Description/Remarks	Remote Examination Conditions/Equipment Remarks	
☐ 6" Scale	Interior surface of Vent Header	N/A	
☐ Other			

Examination Results, Details and Comments:

This General Visual examination identified areas of pitting corrosion and general corrosion. The affected areas are identified on the attached drawings, pages 2-9. All areas with pitting ≥ .025" require evaluation by Design Engineering and all areas of pitting in vent header within 6" of the vent header to vent header bowl weld require evaluation by design engineering. Areas of corrosion have lost coating coverage and will require disposition. Acceptance criteria provided per memo to J. H. Callaghan from J.C. Fitzpatrick 12/7/99. Vent header bowl "H" contains significant water and requires disposition by Design Engineering. All vent header to vent header bowl interfaces require evaluation. Pitting identified all have separation of > 3 pit diameters.

See IDR 01-07

Examiner: Ralph Cornell Level Resp. Eng. Date 5/1/01

Examiner: Dennis Dickson Level Resp. Eng. Date 5/1/01

Reviewer: D Dickson Date 5/1/01

Reviewer: NA Date NA

ANII: [signature] Date 5-2-01

8047-01-031
page 2 of 9

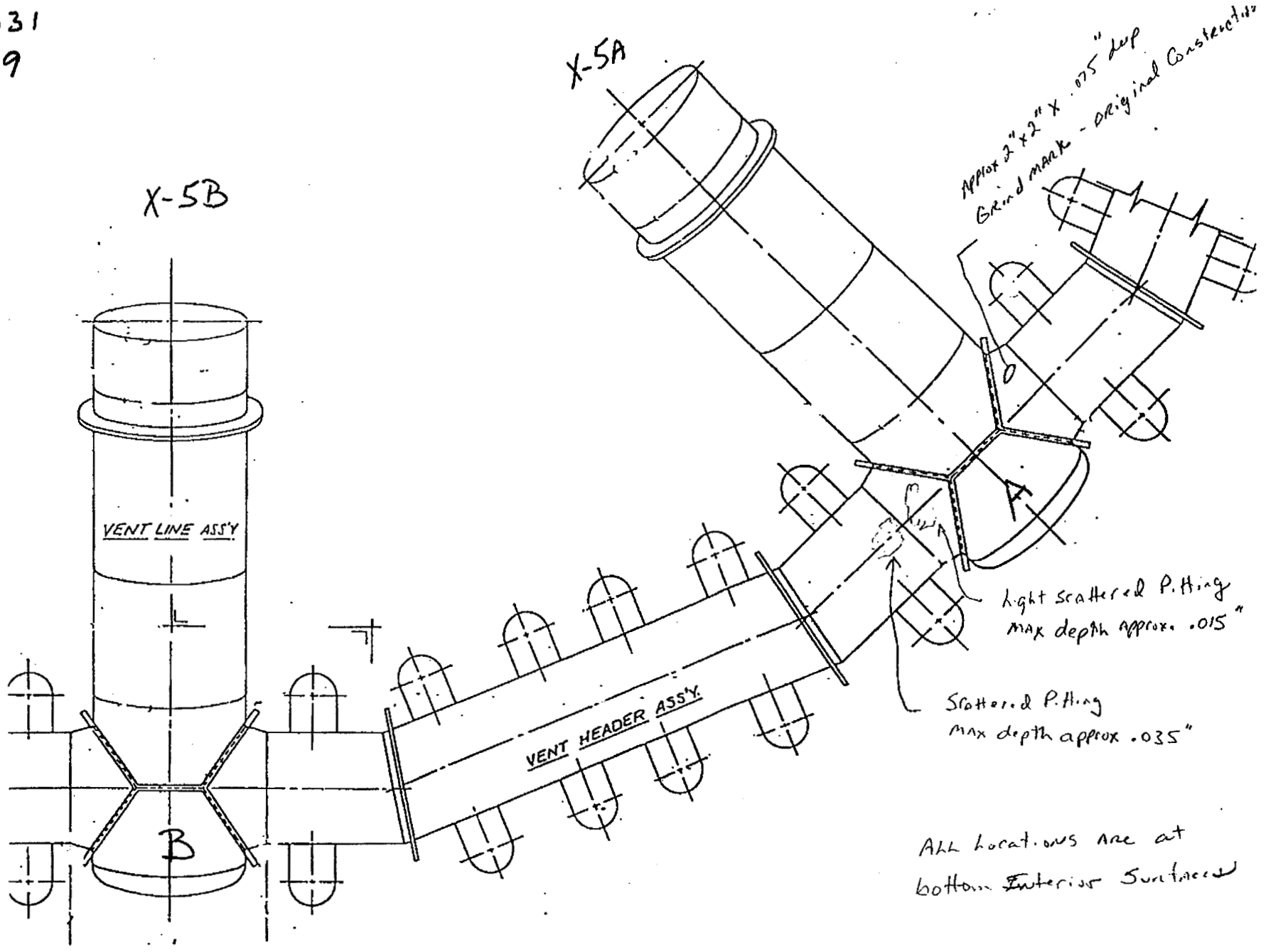

8047-01-031
page 3 of 9

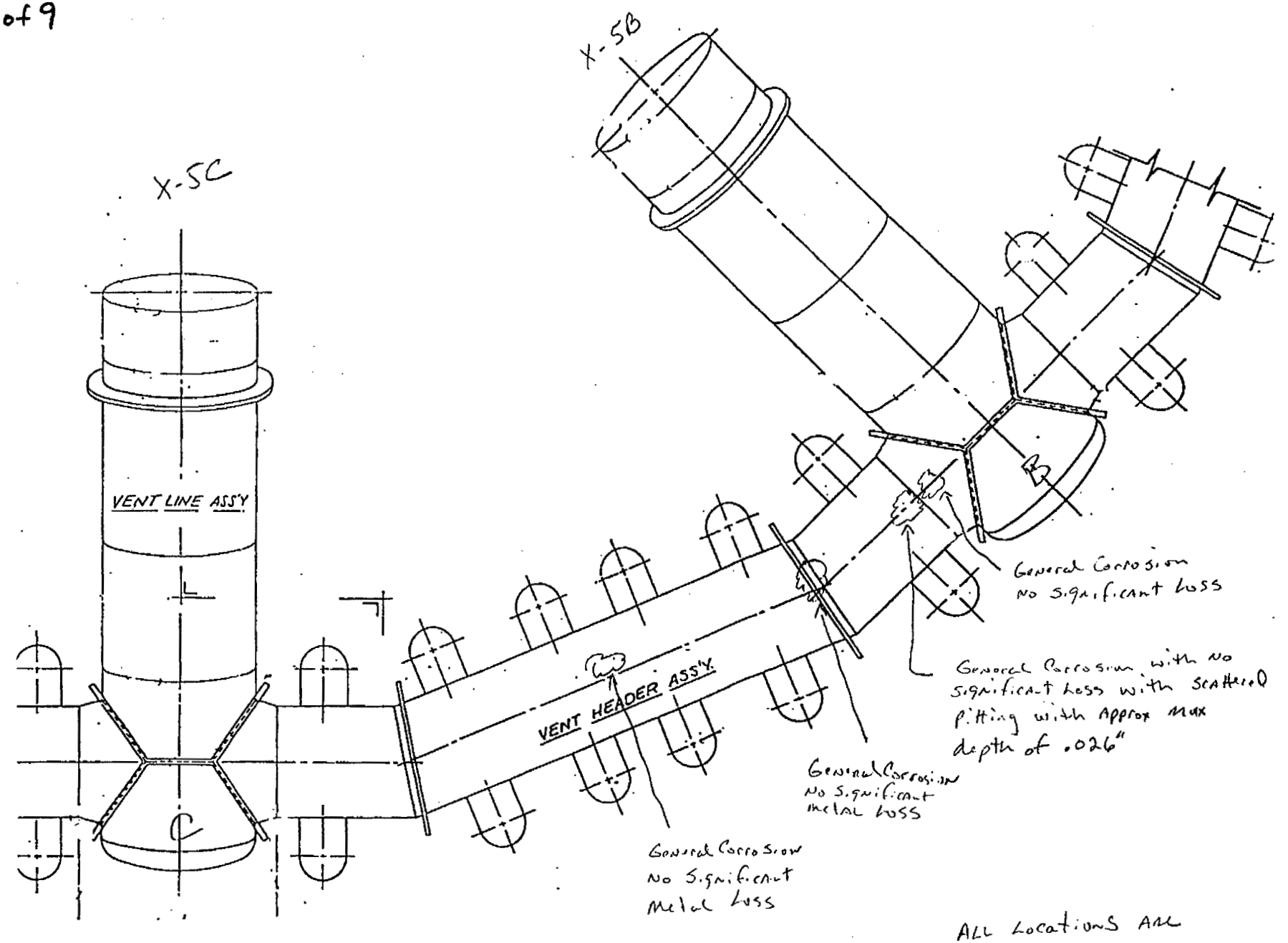

ALL Locations ARE
AT bottom Interior
Surfaces

8047-01-031
page 4 of 9

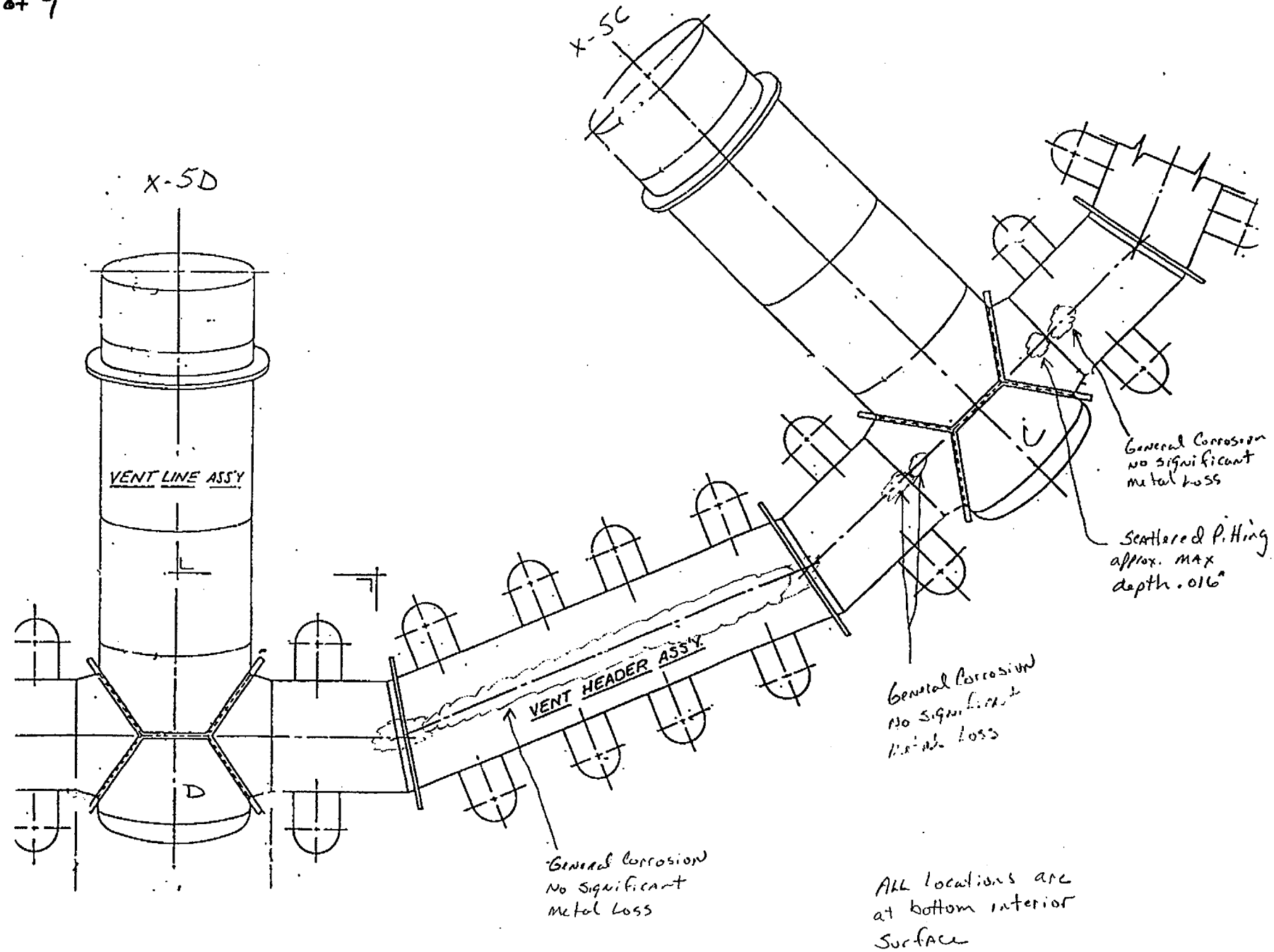

8047-01-031
page 5 of 9

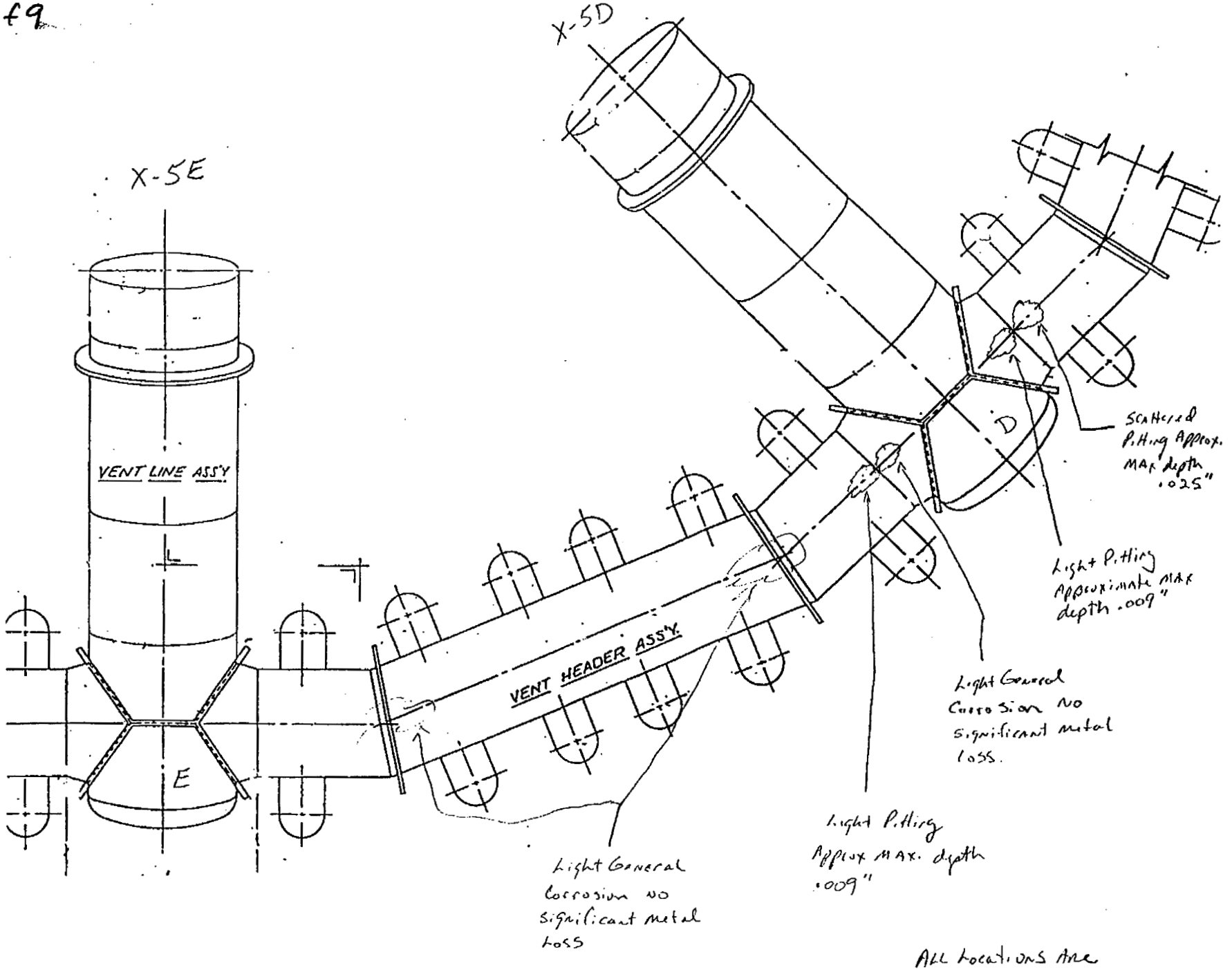

All locations are at bottom interior surface

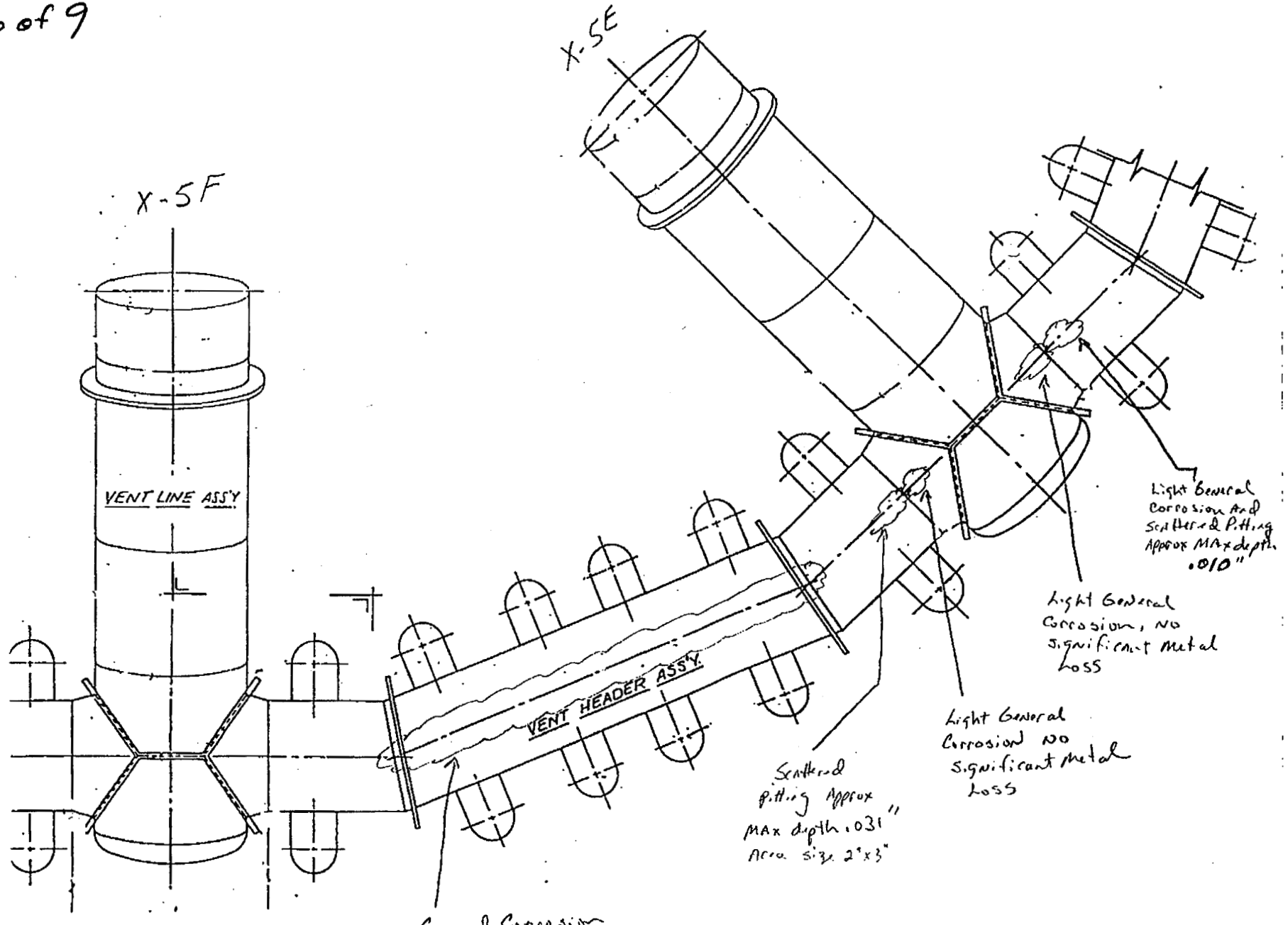

ALL Locations are at bottom interior surfaces.

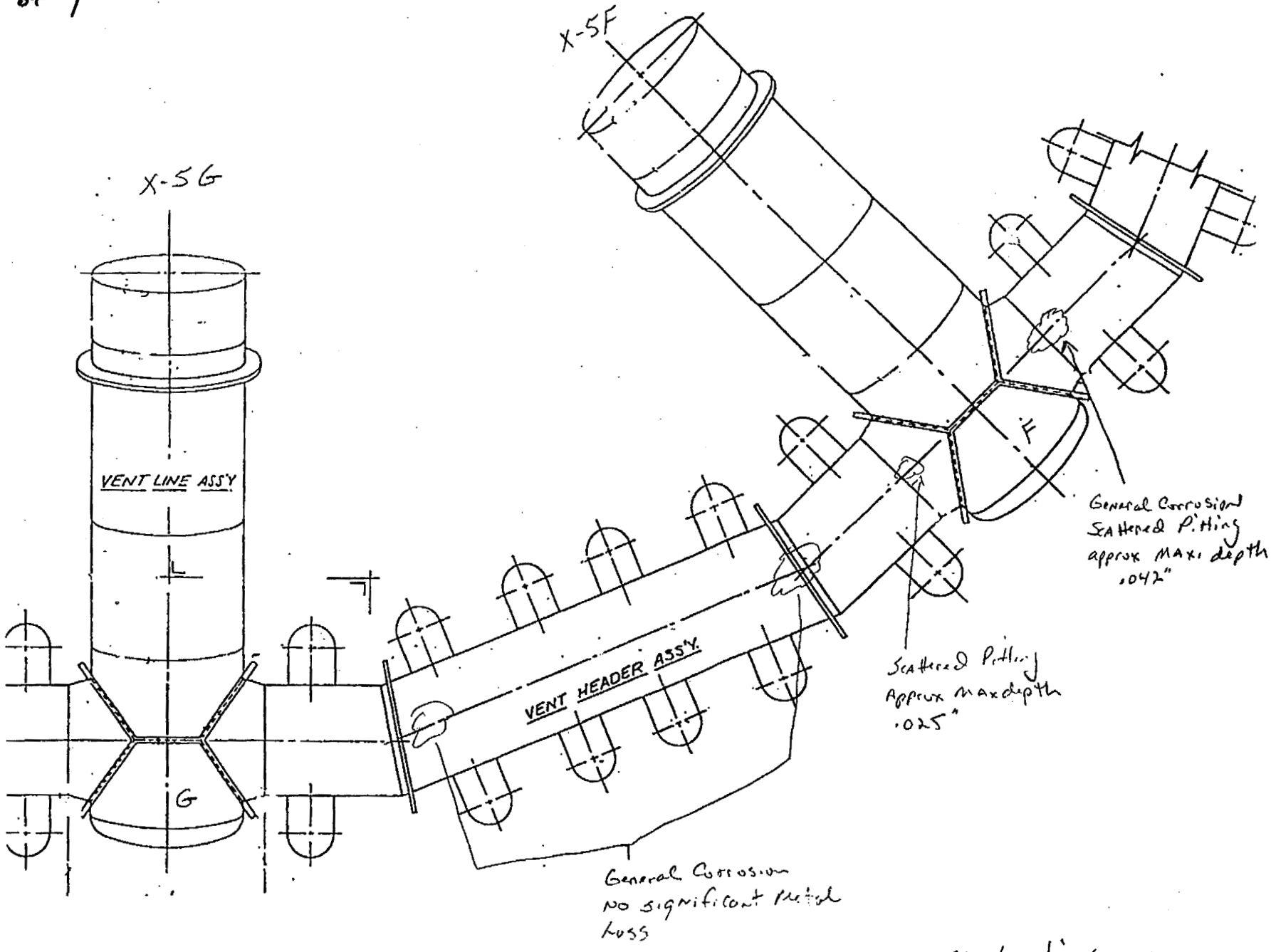

All locations are at bottom interior surface.

8047-01-031
page 8 of 9

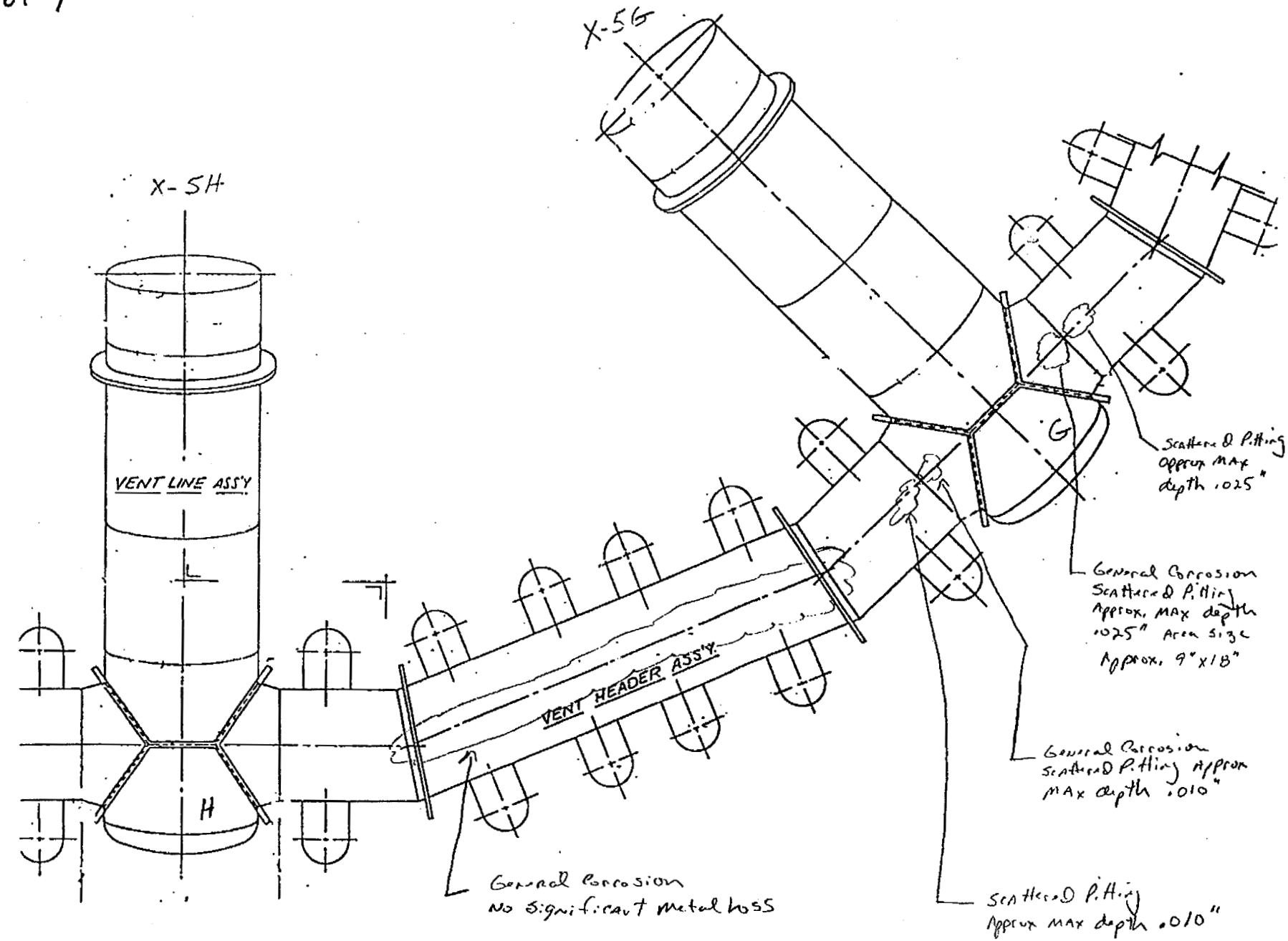

ALL Locations ARE AT Bottom interior Surface

8047-01-031
page 9 of 9

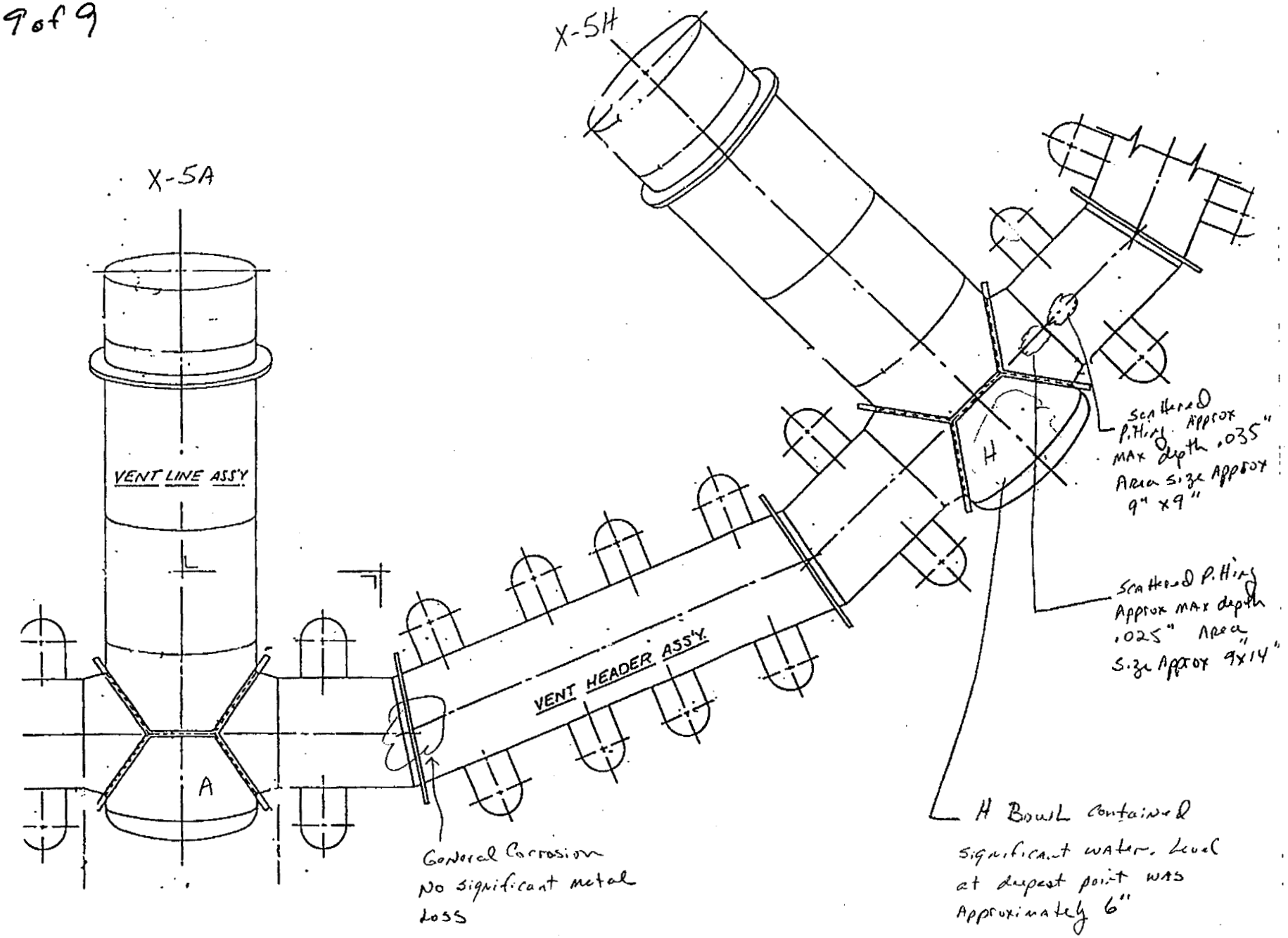

ALL locations Are at Bottom interior Surface.

INSERVICE DISCREPANCY REPORT (IDR)

IDR #: 01-07
Date: 5/2/2001

Component: Vent Header Location: Drywell

Discrepancy: Pitting and general corrosion in excess of Allowable values provided by Design Engineering. All Corrosion areas have lost all coating Coverage. Vent Header Bank H contains significant water level. See General Visual Examination Report # 8047-01-031 Attached.

ISI Supervisor: [illegible] Date: 5/2/01

System Operability Affected: YES ___ NO X* BY: [illegible] Date: 5/2/01
Shift Supervisor Notified: YES ___ NO X BY: [illegible] Date: 5/2/01
Event Report Initiated: YES ___ NO X BY: [illegible] Date: 5/2/01
* to be further reviewed by Design Eng

Mechanical Design Engineering Evaluation: _____

Performed By: _____ Date: _____

Disposition/Repair: _____

ISI Program Coordinator: _____ Date: _____

Repair Effort:

Reference Document: _____

Repair Completion Date: _____

Service Induced: YES ___ NO ___ BY: ___ Date: ___
Sample Expansion Required: YES ___ NO ___ BY: ___ Date: ___
Sample Expansion: _____

ISI Program Coordinator: _____ Date: _____

Reinspection Required: YES ___ NO ___ BY: ___
Subsequent Inspection Required: YES ___ NO ___ BY: ___

ISI Supervisor Notified:

ISI Program Coordinator: _____ Date: _____

Reinspection Completed Satisfactorily:

ISI Supervisor: _____ Date: _____

IDR Closed:

ISI Program Coordinator: _____ Date: _____

Data Sheet No: IWE-GV-360

Work Order No.: 00-005035

Procedure No/Rev.: PP7024/0

Page 1 of 1 Date: 1/16/01

Vermont Yankee
Visual Examination Report Form for General Visual (IWE)

Component

Component ID: X-5A Thru 5H System: Drywell

Drawing No/Rev.: 5920-41 Location: External Surfaces

Visual Aids	Photo	Sketch	Method
☒ Binoculars	☒ None	☒ None	☒ Direct General
☐ Mirror	☐ Attached	☐ Attached	☐ Remote
☒ Light Source	Examination Location Description/Remarks	Remote Examination Conditions/Equipment Remarks	
☐ 6" Scale	Drywell Penetrations 5A, B, C, D, E, F, G + H	N/A	
☐ Other			

Examination Results, Details and Comments:

Due to location and proximity of these penetrations to the Torus they can not be safely accessed by Ladder. Examined these penetrations from existing vantage point from top of Torus. Approximately 67% of each penetration can be Examined. The bottom 25% is unavailable and the last 33% of the Top 25% of these penetrations are unavailable for examination. Examined accessible areas of X-5A, B, C, D, E, F, G + H with no findings identified. Results are satisfactory.

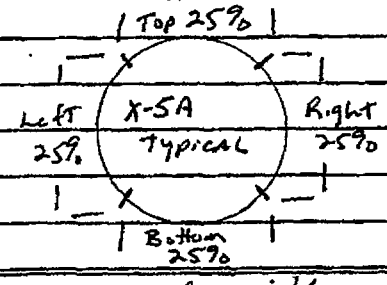

Examiner: Ralph Connell Level Responsible Engineer Date 1/16/01

Examiner: N/A Level N/A Date N/A

Reviewer: N/A Date N/A

Reviewer: N/A Date N/A

ANII: [signature] Date 1-31-01

Data Sheet No: IWE-GV-393

Work Order No.: 00-00 50 35

Procedure No/Rev.: PP 7024/0

Page 1 of 1 Date: 1/15/01

Vermont Yankee
Visual Examination Report Form for General Visual (IWE)

Component

Component ID: X-6 System: Drywell

Drawing No/Rev.: 5920-41 Location: External Surfaces

Visual Aids	Photo	Sketch	Method
☐ Binoculars	☒ None	☒ None	☒ Direct General
☐ Mirror	☐ Attached	☐ Attached	☐ Remote
☒ Light Source	Examination Location Description/Remarks	Remote Examination Conditions/Equipment Remarks	
☐ 6" Scale	Drywell Penetration X-6	N/A	
☐ Other			

Examination Results, Details and Comments:

Vacuumed loose debris from bottom of concrete opening sleeve. Examination of this penetration results in no findings. Results are satisfactory.

Examiner: Ralph Connell Level Responsible Engineer Date 1/16/01

Examiner: N/A Level N/A Date N/A

Reviewer: N/A Date N/A

Reviewer: N/A Date N/A

ANII: [signature] Date 1-31-01

Data Sheet No: 8047-01-044

Work Order No.: 00-5036

Procedure No/Rev.: 8047 R0

Page 1 of 1 Date: 4/30/01

Vermont Yankee
Visual Examination Report Form for General Visual (IWE)

Component

Component ID: X-7 A, B, C, & D System: Drywell

Drawing No/Rev.: 5920-41 Location: Steam Tunnel

Visual Aids	Photo	Sketch	Method
☐ Binoculars	☒ None	☒ None	☒ Direct General
☐ Mirror	☐ Attached	☐ Attached	☐ Remote
☒ Light Source	Examination Location Description/Remarks	Remote Examination Conditions/Equipment Remarks	
☐ 6" Scale	Examination External Drywell Penes	N/A	
☐ Other			

Examination Results, Details and Comments:

Results of this examination are satisfactory with no findings.

Examiner: [signature] Level Resp. Eng Date 4/30/01

Examiner: N/A Level N/A Date N/A

Reviewer: [signature] Date 4/30/01

Reviewer: N/A Date N/A

ANII: [signature] Date 5-2-01

Data Sheet No: IWE-GV-394

Work Order No.: 00-005035

Procedure No/Rev.: PP7024/0

Page 1 of 1 Date: 1/16/01

Vermont Yankee
Visual Examination Report Form for General Visual (IWE)

Component

Component ID: X-8 System: Dry Well

Drawing No/Rev.: 5920-41 Location: External Surfaces

Visual Aids	Photo	Sketch	Method
☐ Binoculars	☒ None	☒ None	☒ Direct General
☐ Mirror	☐ Attached	☐ Attached	☐ Remote
☒ Light Source	Examination Location Description/Remarks	Remote Examination Conditions/Equipment Remarks	
☐ 6" Scale	Dry Well Penetration X-8	N/A	
☐ Other			

Examination Results, Details and Comments:

Vacuumed loose debris from bottom of concrete opening sleeve. Note: A portion of the Styro foam used between the metal containment and concrete pour is visible at this penetration opening. This is part of the construction design. Examination of the penetration has no findings. Results are satisfactory.

Examiner: Ralph Connell Level Responsible Engineer Date 1/16/01

Examiner: N/A Level N/A Date N/A

Reviewer: N/A Date N/A

Reviewer: N/A Date N/A

ANII: [signature] Date 1-31-01

Data Sheet No: 8047-01-043

Work Order No.: 00-5036

Procedure No/Rev.: 8047 R0

Page 1 of 1 Date: 4/30/01

Vermont Yankee
Visual Examination Report Form for General Visual (IWE)

Component

Component ID: X-9 A+B System: Drywell

Drawing No/Rev.: 5920-41 Location: Steam Tunnel

Visual Aids	Photo	Sketch	Method
☐ Binoculars	☒ None	☒ None	☒ Direct General
☐ Mirror	☐ Attached	☐ Attached	☐ Remote
☒ Light Source	Examination Location Description/Remarks	Remote Examination Conditions/Equipment Remarks	
☐ 6" Scale	Examination External Drywell Penet's	N/A	
☐ Other			

Examination Results, Details and Comments:

X-9A had Concrete debri between Top of pipe and Concrete sleeve. Removed Debri. Results of this examination are satisfactory with no findings.

Examiner: [signature] Level Resp. Eng. Date 4/30/01

Examiner: N/A Level N/A Date N/A

Reviewer: [signature] Date 4/30/01

Reviewer: N/A Date N/A

ANII: [signature] Date 5-2-01

Data Sheet No: 8047-01-042

Work Order No.: 00-5036

Procedure No/Rev.: 8047 R0

Page 1 of 1 Date: 4/30/01

Vermont Yankee
Visual Examination Report Form for General Visual (IWE)

Component

Component ID: X-10 System: Drywell

Drawing No/Rev.: 5920-41 Location: Steam Tunnel

Visual Aids	Photo	Sketch	Method
☐ Binoculars	☒ None	☒ None	☒ Direct General
☐ Mirror	☐ Attached	☐ Attached	☐ Remote
☒ Light Source	Examination Location Description/Remarks		Remote Examination Conditions/Equipment Remarks
☐ 6" Scale	External Surface Drywell Pene.		N/A
☐ Other			

Examination Results, Details and Comments:

This Penetration is inaccessible for General Visual Exam. Metal Backed insulation covers piping to penetration opening and Blocks visual access. This Insulation can be removed for the Scheduled VT-3 exam if necessary to meet ASME Section XI requirements.

Examiner: [signature] Level Resp. Eng. Date 4/30/01

Examiner: N/A Level N/A Date N/A

Reviewer: [signature] Date 4/30/01

Reviewer: N/A Date N/A

ANII: [signature] Date 5-2-01

Data Sheet No: 8047-01-041

Work Order No.: 00-5036

Procedure No/Rev.: 8047 R0

Page 1 of 1 Date: 4/30/01

Vermont Yankee
Visual Examination Report Form for General Visual (IWE)

Component

Component ID: X-11 System: Drywell

Drawing No/Rev.: 5920-41 Location: Steam Tunnel

Visual Aids	Photo	Sketch	Method
☐ Binoculars	☒ None	☒ None	☒ Direct General
☐ Mirror	☐ Attached	☐ Attached	☐ Remote
☒ Light Source	Examination Location Description/Remarks	Remote Examination Conditions/Equipment Remarks	
☐ 6" Scale	External Surface Drywell Pene	N/A	
☐ Other			

Examination Results, Details and Comments:

This Penetration is inaccessible for General Visual Exam. Metal Backed insulation covers piping to penetration opening and Blocks visual access.

This insulation can be removed for the scheduled VT-3 exam if necessary to meet ASME Section XI requirements.

Examiner: [signature] Level Resp. Eng. Date 4/30/01

Examiner: N/A Level N/A Date N/A

Reviewer: [signature] Date 4/30/01

Reviewer: N/A Date N/A

ANII: [signature] Date 5-2-01

Data Sheet No: IWE-GV-383

Work Order No.: 00-00 5035

Procedure No/Rev.: PP7024/0

Page 1 of 1 Date: 1/15/01

Vermont Yankee
Visual Examination Report Form for General Visual (IWE)

Component

Component ID: X-12 System: Drywell

Drawing No/Rev.: 5920-41 Location: External Surface

Visual Aids	Photo	Sketch	Method
☐ Binoculars	☒ None	☒ None	☒ Direct General
☐ Mirror	☐ Attached	☐ Attached	☐ Remote
☒ Light Source	Examination Location Description/Remarks		Remote Examination Conditions/Equipment Remarks
☐ 6" Scale	Drywell Penetration X-12		N/A
☐ Other			

Examination Results, Details and Comments:

Examined this penetration with no findings identified. Results are satisfactory.

Examiner: [signature] Level Responsible Engineer Date 1/15/01

Examiner: N/A Level N/A Date N/A

Reviewer: N/A Date N/A

Reviewer: N/A Date N/A

ANII: [signature] Date 1-31-01

Data Sheet No: IWE-GV-382

Work Order No.: 00-005035

Procedure No/Rev.: PP7024/0

Page 1 of 1 Date: 1/15/01

Vermont Yankee
Visual Examination Report Form for General Visual (IWE)

Component

Component ID: X-13 A + B System: Drywell Penetration

Drawing No/Rev.: 5920-41 Location: Exterior Surface

Visual Aids	Photo	Sketch	Method
☐ Binoculars	☒ None	☒ None	☒ Direct General
☐ Mirror	☐ Attached	☐ Attached	☐ Remote
☒ Light Source	Examination Location Description/Remarks		Remote Examination Conditions/Equipment Remarks
☐ 6" Scale	Drywell Penetrations X-13A + X-13B		N/A
☐ Other			

Examination Results, Details and Comments:

Removed Debris from bottom of Concrete Sleeve for X-13A. Examined X-13A and X-13B with no findings identified. Results are satisfactory.

Examiner: Ralph Connell Level Responsible Engineer Date 1/15/01

Examiner: N/A Level N/A Date N/A

Reviewer: N/A Date N/A

Reviewer: N/A Date N/A

ANII: [signature] Date 1-31-01

VYNEF 8047.06
NE 8047 Original
Page 1 of 1

Data Sheet No: 8047-01-040

Work Order No.: 00-5037

Procedure No/Rev.: 8047 R0

Page 1 of 1 Date: 5/1/01

Vermont Yankee
Visual Examination Report Form for General Visual (IWE)

Component

Component ID: X-14 System: Drywell

Drawing No/Rev.: 5920-41 Location: Rx Bldg

Visual Aids	Photo	Sketch	Method
☐ Binoculars	☒ None	☒ None	☒ Direct General
☐ Mirror	☐ Attached	☐ Attached	☐ Remote
☒ Light Source	Examination Location Description/Remarks	Remote Examination Conditions/Equipment Remarks	
☐ 6" Scale	External Surface Drywell Pene	N/A	
☐ Other			

Examination Results, Details and Comments:

Results of this examination are satisfactory with no findings.

Examiner: [signature] Level Resp. Eng Date 5/1/01

Examiner: N/A Level N/A Date N/A

Reviewer: [signature] Date 5/1/01

Reviewer: N/A Date N/A

ANII: [signature] Date 5-2-01

Data Sheet No: 8047-01-051

Work Order No.: 00-5036

Procedure No/Rev.: 8047 R0

Page 1 of 1 Date: 5/4/01

Vermont Yankee
Visual Examination Report Form for General Visual (IWE)

Component

Component ID: X-15 System: Drywell

Drawing No/Rev.: 5920-41 Location: Reactor Building

Visual Aids	Photo	Sketch	Method
☐ Binoculars	☒ None	☒ None	☒ Direct General
☐ Mirror	☐ Attached	☐ Attached	☐ Remote
☒ Light Source	Examination Location Description/Remarks	Remote Examination Conditions/Equipment Remarks	
☐ 6" Scale	External Surface Drywell Pene	N/A	
☐ Other			

Examination Results, Details and Comments:

Results of this examination are satisfactory with no findings.

Examiner: [signature] Level Resp. Eng. Date 5/4/01

Examiner: N/A Level N/A Date N/A

Reviewer: [signature] Date 5/4/01

Reviewer: N/A Date N/A

ANII: [signature] Date 5-5-01

Data Sheet No: IWE-GV-381

Work Order No.: 00-005035

Procedure No/Rev.: PP 7024/0

Page 1 of 1 Date: 1/16/01

Vermont Yankee
Visual Examination Report Form for General Visual (IWE)

Component

Component ID: X-16A System: Drywell

Drawing No/Rev.: 5920-41 Location: External Surface

Visual Aids	Photo	Sketch	Method
☐ Binoculars	☒ None	☒ None	☒ Direct General
☐ Mirror	☐ Attached	☐ Attached	☐ Remote
☒ Light Source	Examination Location Description/Remarks		Remote Examination Conditions/Equipment Remarks
☐ 6" Scale	Drywell Penetration X-16A		N/A
☐ Other_____			

Examination Results, Details and Comments:

Examined this penetration with no findings identified. Results are Satisfactory.

Examiner: Ralph Connell Level Responsible Engineer Date 1/16/01

Examiner: N/A Level N/A Date N/A

Reviewer: N/A Date N/A

Reviewer: N/A Date N/A

ANII: V. Dyer Date 1-31-01

VYNEF 8047.06
NE 8047 Original
Page 1 of 1

Data Sheet No: 8047-01-039

Work Order No.: 00-5037

Procedure No/Rev.: 8047 R0

Page 1 of 1 Date: 5/1/01

Vermont Yankee
Visual Examination Report Form for General Visual (IWE)

Component

Component ID: X-16B System: Drywell

Drawing No/Rev.: 5920-41 Location: Rx Bldg

Visual Aids	Photo	Sketch	Method
☐ Binoculars	☒ None	☒ None	☒ Direct General
☐ Mirror	☐ Attached	☐ Attached	☐ Remote
☒ Light Source	Examination Location Description/Remarks	Remote Examination Conditions/Equipment Remarks	
☐ 6" Scale	External Surface Drywell Pene	N/A	
☐ Other			

Examination Results, Details and Comments:

Results of this examination are satisfactory with no findings.

Examiner: [signature] Level Resp Eng Date 5/1/01

Examiner: N/A Level N/A Date N/A

Reviewer: [signature] Date 5/1/01

Reviewer: N/A Date N/A

ANII: [signature] Date 5-2-01

Data Sheet No: IWE-GV-380

Work Order No.: 00-005035

Procedure No/Rev.: PP7024/0

Page 1 of 1 Date: 1/16/01

Vermont Yankee
Visual Examination Report Form for General Visual (IWE)

Component

Component ID: X-17 System: Drywell

Drawing No/Rev.: 5920-41 Location: External Surface

Visual Aids	Photo	Sketch	Method
☐ Binoculars	☒ None	☒ None	☒ Direct General
☐ Mirror	☐ Attached	☐ Attached	☐ Remote
☒ Light Source	Examination Location Description/Remarks		Remote Examination Conditions/Equipment Remarks
☐ 6" Scale	Drywell Penetration X-17		N/A
☐ Other			

Examination Results, Details and Comments:

Examined this penetration with no findings identified. Results are satisfactory.

Examiner: Ralph Connell Level Responsible Engineer Date 1/16/01

Examiner: N/A Level N/A Date N/A

Reviewer: N/A Date N/A

Reviewer: N/A Date N/A

ANII: [illegible] Date 1-31-01

Data Sheet No: IWE-GV-379

Work Order No.: 00-00 50 35

Procedure No/Rev.: PP 7024/0

Page 1 of 1 Date: 1/16/01

Vermont Yankee
Visual Examination Report Form for General Visual (IWE)

Component

Component ID: X-18 System: Dry well

Drawing No/Rev.: 5920-41 Location: External Surface

Visual Aids	Photo	Sketch	Method
☐ Binoculars	☒ None	☒ None	☒ Direct General
☐ Mirror	☐ Attached	☐ Attached	☐ Remote
☒ Light Source	Examination Location Description/Remarks	Remote Examination Conditions/Equipment Remarks	
☐ 6" Scale	Drywell Penetration X-18	N/A	
☐ Other			

Examination Results, Details and Comments:

Vacuumed Concrete Penetration Sleeve for this Penetration. Examined this Penetration with no findings identified. Results are Satisfactory.

Examiner: Ralph Connell Level Responsible Engineer Date 1/16/01

Examiner: N/A Level N/A Date N/A

Reviewer: N/A Date N/A

Reviewer: N/A Date N/A

ANII: [illegible] Date 1-31-01

Data Sheet No: IWE-GV-378

Work Order No.: 00-005035

Procedure No/Rev.: PP7024/0

Page 1 of 1 Date: 1/16/01

Vermont Yankee
Visual Examination Report Form for General Visual (IWE)

Component

Component ID: X-19 System: Drywell

Drawing No/Rev.: 5920-41 Location: External Surface

Visual Aids	Photo	Sketch	Method
☐ Binoculars	☒ None	☒ None	☒ Direct General
☐ Mirror	☐ Attached	☐ Attached	☐ Remote
☒ Light Source	Examination Location Description/Remarks		Remote Examination Conditions/Equipment Remarks
☐ 6" Scale	Drywell Penetration X-19		N/A
☐ Other			

Examination Results, Details and Comments:

Vacuumed concrete penetration sleeve for this penetration. Examined this penetration with no findings identified. Results are satisfactory.

Examiner: Ralph Connell Level Responsible Engineer Date 1/16/01

Examiner: N/A Level N/A Date N/A

Reviewer: N/A Date N/A

Reviewer: N/A Date N/A

ANII: [signature] Date 1-31-01

Data Sheet No: 8047-01-038

Work Order No.: 00-5037

Procedure No/Rev.: 8047 R0

Page 1 of 1 Date: 5/1/01

Vermont Yankee
Visual Examination Report Form for General Visual (IWE)

Component

Component ID: X-19 System: Drywell

Drawing No/Rev.: 5920-41 Location: Drywell

Visual Aids	Photo	Sketch	Method
☐ Binoculars	☒ None	☒ None	☒ Direct General
☐ Mirror	☐ Attached	☐ Attached	☐ Remote
☒ Light Source	Examination Location Description/Remarks	Remote Examination Conditions/Equipment Remarks	
☐ 6" Scale	Internal Surface Drywell pene.	N/A	
☐ Other			

Examination Results, Details and Comments:

Results of this Examination are satisfactory with no findings.

Examiner: [signature] Level Resp Eng. Date 5/1/01

Examiner: N/A Level N/A Date N/A

Reviewer: [signature] Date 5/1/01

Reviewer: N/A Date N/A

ANII: [signature] Date 5-2-01

Data Sheet No: IWE-GV-377

Work Order No.: 00-005035

Procedure No/Rev.: PP 7024/0

Page 1 of 1 Date: 1/16/01

Vermont Yankee
Visual Examination Report Form for General Visual (IWE)

Component

Component ID: X-20 System: Drywell

Drawing No/Rev.: 5920-41 Location: External Surfaces

Visual Aids	Photo	Sketch	Method
☐ Binoculars	☒ None	☒ None	☒ Direct General
☐ Mirror	☐ Attached	☐ Attached	☐ Remote
☒ Light Source	Examination Location Description/Remarks	Remote Examination Conditions/Equipment Remarks	
☐ 6" Scale	Drywell Penetration X-20	N/A	
☐ Other			

Examination Results, Details and Comments:

Vacuumed Concrete Penetration Sleeve for this penetration. Examined this penetration with no findings identified. Results are satisfactory.

Examiner: Ralph Connell Level Responsible Engineer Date 1/16/01

Examiner: N/A Level N/A Date N/A

Reviewer: N/A Date N/A

Reviewer: N/A Date N/A

ANII: [illegible] Date 1-31-01

Data Sheet No: IWE-GV-376

Work Order No.: 00-005035

Procedure No/Rev.: PP7024/0

Page 1 of 1 Date: 1/16/01

Vermont Yankee
Visual Examination Report Form for General Visual (IWE)

Component

Component ID: X-21 System: Drywell

Drawing No/Rev.: 5920-41 Location: External Surface

Visual Aids	Photo	Sketch	Method
☒ Binoculars	☒ None	☒ None	☒ Direct General
☐ Mirror	☐ Attached	☐ Attached	☐ Remote
☒ Light Source	Examination Location Description/Remarks	Remote Examination Conditions/Equipment Remarks	
☐ 6" Scale	Drywell Penetration X-21	N/A	
☐ Other			

Examination Results, Details and Comments:

Examined this Penetration from Existing Vantage point, (From top of Torus). Examined this Penetration with No findings identified. Results are Satisfactory.

Examiner: Ralph Conwell Level Responsible Engineer Date 1/16/01

Examiner: N/A Level N/A Date N/A

Reviewer: N/A Date N/A

Reviewer: N/A Date N/A

ANII: [signature] Date 1-31-01

Data Sheet No: IWE-GV-374

Work Order No.: 00-005035

Procedure No/Rev.: PP7024/0

Page 1 of 1 Date: 1/16/01

Vermont Yankee
Visual Examination Report Form for General Visual (IWE)

Component

Component ID: X-22 System: Drywell

Drawing No/Rev.: 5920-41 Location: External Surfaces

Visual Aids	Photo	Sketch	Method
☒ Binoculars	☒ None	☒ None	☒ Direct General
☐ Mirror	☐ Attached	☐ Attached	☐ Remote
☒ Light Source	Examination Location Description/Remarks	Remote Examination Conditions/Equipment Remarks	
☐ 6" Scale	Drywell Penetration X-22	N/A	
☐ Other			

Examination Results, Details and Comments:

Examined this Penetration from existing Vantage point, (from Top of Torus). Examined this Penetration with No findings identified. Results Are Satisfactory.

Examiner: Ralph Connell Level Responsible Eng. Date 1/16/01

Examiner: N/A Level N/A Date N/A

Reviewer: N/A Date N/A

Reviewer: N/A Date N/A

ANII: [illegible] Date 1-31-01

Vermont Yankee
Visual Examination Report Form for General Visual (IWE)

Data Sheet No: 8047-01-037
Work Order No.: 00-5037
Procedure No/Rev.: 8047 R0
Page 1 of 1 Date: 5/1/01

Component

Component ID: X-23 System: Drywell
Drawing No/Rev.: 5920-41 Location: Drywell

Visual Aids	Photo	Sketch	Method
☐ Binoculars	☒ None	☒ None	☒ Direct General
☐ Mirror	☐ Attached	☐ Attached	☐ Remote
☒ Light Source	Examination Location Description/Remarks	Remote Examination Conditions/Equipment Remarks	
☐ 6" Scale	Internal Surface	N/A	
☐ Other	Drywell Liner		

Examination Results, Details and Comments:

Insulation Blocks access for Complete General Visual Exam. Internal Surface in inaccessible for General Visual Exam.

This insulation can be removed for the scheduled VT-3 Exam if required to meet ASME Section XI requirements.

Examiner: [signature] Level Resp. Eng. Date 5/1/01
Examiner: N/A Level N/A Date N/A
Reviewer: [signature] Date 5/1/01
Reviewer: N/A Date N/A
ANII: [signature] Date 5-2-01

Data Sheet No: IWE-GV-373

Work Order No.: 00-005035

Procedure No/Rev.: PP7024/0

Page 1 of 1 Date: 1/16/01

Vermont Yankee
Visual Examination Report Form for General Visual (IWE)

Component

Component ID: X-23 System: Drywell

Drawing No/Rev.: 5920-41 Location: External Surfaces

Visual Aids	Photo	Sketch	Method
☒ Binoculars	☒ None	☒ None	☒ Direct General
☐ Mirror	☐ Attached	☐ Attached	☐ Remote
☒ Light Source	Examination Location Description/Remarks		Remote Examination Conditions/Equipment Remarks
☐ 6" Scale	Drywell Penetration X-23		N/A
☐ Other			

Examination Results, Details and Comments:

Examined this penetration from existing vantage point, (from Top of Torus). Examined this penetrations with no findings identified. Results are satisfactory.

Examiner: Ralph Burrell Level Responsible Engineer Date 1/16/01

Examiner: N/A Level N/A Date N/A

Reviewer: N/A Date N/A

Reviewer: N/A Date N/A

ANII: V. Boyer Date 1-31-01

Data Sheet No: 8047-01-036

Work Order No.: 00-5037

Procedure No/Rev.: 8047 R0

Page 1 of 1 Date: 5/1/01

Vermont Yankee
Visual Examination Report Form for General Visual (IWE)

Component

Component ID: X-24 System: Drywell

Drawing No/Rev.: 5920-41 Location: Drywell

Visual Aids	Photo	Sketch	Method
☐ Binoculars	☒ None	☒ None	☒ Direct General
☐ Mirror	☐ Attached	☐ Attached	☐ Remote
☒ Light Source	Examination Location Description/Remarks	Remote Examination Conditions/Equipment Remarks	
☐ 6" Scale	Internal Surface	N/A	
☐ Other	Drywell pene.		

Examination Results, Details and Comments:

Insulation Blocks access for Complete General Visual Exam. Internal Surface is inaccessible for General Visual Exam.

This insulation can be removed for the scheduled VT-3 exam if required to meet ASME Section XI requirements.

Examiner: [signature] Level Resp. Eng. Date 5/1/01

Examiner: N/A Level N/A Date N/A

Reviewer: [signature] Date 5/1/01

Reviewer: N/A Date N/A

ANII: [signature] Date 5-2-01

Data Sheet No: IWE-GV-372

Work Order No.: 00-005035

Procedure No/Rev.: PP7024/0

Page 1 of 1 Date: 1/16/01

Vermont Yankee
Visual Examination Report Form for General Visual (IWE)

Component

Component ID: X-24 System: Drywell

Drawing No/Rev.: 5920-41 Location: External Surfaces

Visual Aids	Photo	Sketch	Method
☒ Binoculars	☒ None	☒ None	☒ Direct General
☐ Mirror	☐ Attached	☐ Attached	☐ Remote
☒ Light Source	Examination Location Description/Remarks	Remote Examination Conditions/Equipment Remarks	
☐ 6" Scale	Drywell Penetration X-24	N/A	
☐ Other			

Examination Results, Details and Comments:

Examined this penetration from existing vantage point, (from top of Torus). Examined this penetration with no findings identified. Results are satisfactory.

Examiner: Ralph Conwell Level Responsible Engineer Date 1/16/01

Examiner: N/A Level N/A Date N/A

Reviewer: N/A Date N/A

Reviewer: N/A Date N/A

ANII: [illegible] Date 1-31-01

Data Sheet No: IWE-GV-368

Work Order No.: 00-00 5035

Procedure No/Rev.: PP7024/0

Page 1 of 1 Date: 1/16/01

Vermont Yankee
Visual Examination Report Form for General Visual (IWE)

Component

Component ID: X-25 System: Drywell

Drawing No/Rev.: 5920-41 Location: External Surfaces

Visual Aids	Photo	Sketch	Method
☐ Binoculars ☐ Mirror ☒ Light Source ☐ 6" Scale ☐ Other	☒ None ☐ Attached	☒ None ☐ Attached	☒ Direct General ☐ Remote

Examination Location Description/Remarks	Remote Examination Conditions/Equipment Remarks
Drywell Penetration X-25	N/A

Examination Results, Details and Comments:

The Styrofoam spacer material used between the steel containment and the concrete pour is visible at this penetration. This is part of the original construction design. Examined this penetration with no findings identified. Results are satisfactory.

Examiner: Ralph Connell Level Responsible Engineer Date 1/16/01

Examiner: N/A Level N/A Date N/A

Reviewer: N/A Date N/A

Reviewer: N/A Date N/A

ANII: [illegible] Date 1-31-01

VYNEF 8047.06
NE 8047 Original
Page 1 of 1

Data Sheet No: IWE-GV-371

Work Order No.: 00-005035

Procedure No/Rev.: PP 7024/0

Page 1 of 1 Date: 1/16/01

Vermont Yankee
Visual Examination Report Form for General Visual (IWE)

Component

Component ID: X-26 System: Drywell

Drawing No/Rev.: 5920-41 Location: External Surfaces

Visual Aids	Photo	Sketch	Method
☐ Binoculars	☒ None	☒ None	☒ Direct General
☐ Mirror	☐ Attached	☐ Attached	☐ Remote
☒ Light Source	Examination Location Description/Remarks	Remote Examination Conditions/Equipment Remarks	
☐ 6" Scale	Drywell Penetration X-26	N/A	
☐ Other			

Examination Results, Details and Comments:

Removed weld rod holder from lower part of concrete sleeve and vacuumed debris. Examined this penetration with no findings identified. Results are satisfactory.

Examiner: Ralph Connell Level Responsible Engineer Date 1/16/01

Examiner: N/A Level N/A Date N/A

Reviewer: N/A Date N/A

Reviewer: N/A Date N/A

ANII: [signature] Date 1-31-01

Data Sheet No: 8047-01-050

Work Order No.: 00-5036

Procedure No/Rev.: 8047 R0

Page 1 of 1 Date: 5/4/01

Vermont Yankee
Visual Examination Report Form for General Visual (IWE)

Component

Component ID: X-27 System: Drywell

Drawing No/Rev.: 5920-41 Location: Reactor Building

Visual Aids	Photo	Sketch	Method
☐ Binoculars	☒ None	☒ None	☒ Direct General
☐ Mirror	☐ Attached	☐ Attached	☐ Remote
☒ Light Source	Examination Location Description/Remarks	Remote Examination Conditions/Equipment Remarks	
☐ 6" Scale	External Surface Drywell Bowl	N/A	
☐ Other			

Examination Results, Details and Comments:

Styrofoam used during original construction is present in the upper 2/3 of this penetration. It was originally placed for the original concrete pour and is located between the inside surface of the concrete and the outside surface of the drywell. This condition is acceptable as is. Results of this examination are satisfactory with no findings.

Examiner: [signature] Level Rep Eng Date 5/4/01

Examiner: N/A Level N/A Date N/A

Reviewer: [signature] Date 5/4/01

Reviewer: N/A Date N/A

ANII: [signature] Date 5-5-01

370

Data Sheet No: IWE-GV-~~369~~ 1/4

Work Order No.: 00-005035

Procedure No/Rev.: PP 7024/0

Page 1 of 1 Date: 1/16/01

Vermont Yankee
Visual Examination Report Form for General Visual (IWE)

Component

Component ID: X-28 System: Drywell

Drawing No/Rev.: 5920-41 Location: External Surfaces

Visual Aids	Photo	Sketch	Method
☐ Binoculars	☒ None	☒ None	☒ Direct General
☐ Mirror	☐ Attached	☐ Attached	☐ Remote
☒ Light Source	Examination Location Description/Remarks	Remote Examination Conditions/Equipment Remarks	
☐ 6" Scale	Drywell Penetration X-28	N/A	
☐ Other			

Examination Results, Details and Comments:

Examined this penetration with no findings identified. Results are Satisfactory.

Examiner: Ralph Connell Level Responsible Engineer Date 1/16/01

Examiner: N/A Level N/A Date N/A

Reviewer: N/A Date N/A

Reviewer: N/A Date N/A

ANII: [illegible] Date 1-31-01

Data Sheet No: IWE-GV-369

Work Order No.: 00-005035

Procedure No/Rev.: PP 7024/0

Page 1 of 1 Date: 1/16/01

Vermont Yankee
Visual Examination Report Form for General Visual (IWE)

Component

Component ID: X-29 System: Drywell

Drawing No/Rev.: 5920-41 Location: External Surfaces.

Visual Aids	Photo	Sketch	Method
☐ Binoculars	☒ None	☒ None	☒ Direct General
☐ Mirror	☐ Attached	☐ Attached	☐ Remote
☒ Light Source	Examination Location Description/Remarks	Remote Examination Conditions/Equipment Remarks	
☐ 6" Scale	Drywell Penetration X-29	N/A	
☐ Other			

Examination Results, Details and Comments:

Examined this penetration with no findings identified. Results are satisfactory.

Examiner: Ralph Connell Level Responsible Engineer Date 1/16/01

Examiner: N/A Level N/A Date N/A

Reviewer: N/A Date N/A

Reviewer: N/A Date N/A

ANII: [signature] Date 1-31-01

VYNEF 8047.06
NE 8047 Original
Page 1 of 1

Data Sheet No: IWE-GV-375

Work Order No.: 00-005035

Procedure No/Rev.: PP 7024/0

Page 1 of 1 Date: 1/16/01

Vermont Yankee
Visual Examination Report Form for General Visual (IWE)

Component

Component ID: X-30 System: Drywell

Drawing No/Rev.: 5920-41 Location: External Surface

Visual Aids	Photo	Sketch	Method
☐ Binoculars	☒ None	☒ None	☒ Direct General
☐ Mirror	☐ Attached	☐ Attached	☐ Remote
☒ Light Source	Examination Location Description/Remarks	Remote Examination Conditions/Equipment Remarks	
☐ 6" Scale	Drywell Penetration X-30	N/A	
☐ Other			

Examination Results, Details and Comments:

Examined this penetration with No findings identified. Results are satisfactory.

Examiner: Ralph Connell Level Responsible Engineer Date 1/16/01

Examiner: N/A Level N/A Date N/A

Reviewer: N/A Date N/A

Reviewer: N/A Date N/A

ANII: [illegible] Date 1-31-01

Data Sheet No: IWE-GV-365

Work Order No.: 00-005035

Procedure No/Rev.: PP 7024/0

Page 1 of 1 Date: 1/16/01

Vermont Yankee
Visual Examination Report Form for General Visual (IWE)

Component

Component ID: X-31 System: Drywell

Drawing No/Rev.: 5920-41 Location: External Surfaces

Visual Aids	Photo	Sketch	Method
☐ Binoculars	☒ None	☒ None	☒ Direct General
☐ Mirror	☐ Attached	☐ Attached	☐ Remote
☒ Light Source	Examination Location Description/Remarks	Remote Examination Conditions/Equipment Remarks	
☐ 6" Scale	Drywell Penetration X-31	N/A	
☐ Other			

Examination Results, Details and Comments:

The Styrofoam spacer material used between the steel containment and the concrete pour is visible at this penetration. This is part of the original construction design. Examined this penetration with no findings identified. Results are satisfactory. Vacuumed concrete penetration sleeve.

Examiner: Ralph Connell Level Responsible Engineer Date 1/16/01

Examiner: N/A Level N/A Date N/A

Reviewer: N/A Date N/A

Reviewer: N/A Date N/A

ANII: [signature] Date 1-31-01

Data Sheet No: IWE-GV-367

Work Order No.: 00-005035

Procedure No/Rev.: PP7024/0

Page 1 of 1 Date: 1/16/01

Vermont Yankee
Visual Examination Report Form for General Visual (IWE)

Component

Component ID: X-32 System: Drywell

Drawing No/Rev.: 5920-41 Location: External Surfaces

Visual Aids	Photo	Sketch	Method
☐ Binoculars	☒ None	☒ None	☒ Direct General
☐ Mirror	☐ Attached	☐ Attached	☐ Remote
☒ Light Source	Examination Location Description/Remarks	Remote Examination Conditions/Equipment Remarks	
☐ 6" Scale	Drywell Penetration X-32	N/A	
☐ Other			

Examination Results, Details and Comments:

Vacuumed debris from concrete penetration sleeve. Examined this penetration with no findings identified. Results are satisfactory.

Examiner: Ralph Cornwell Level Responsible Engineer Date 1/16/01

Examiner: N/A Level N/A Date N/A

Reviewer: N/A Date N/A

Reviewer: N/A Date N/A

ANII: [illegible] Date 1-31-01

VYNEF 8047.06
NE 8047 Original
Page 1 of 1

Data Sheet No: IWE-GV-366

Work Order No.: 00-00 5035

Procedure No/Rev.: PP 7024/0

Page 1 of 1 Date: 1/15/01

Vermont Yankee
Visual Examination Report Form for General Visual (IWE)

Component

Component ID: X-33 System: Drywell

Drawing No/Rev.: 5920-41 Location: External Surface

Visual Aids	Photo	Sketch	Method
☐ Binoculars	☒ None	☒ None	☒ Direct General
☐ Mirror	☐ Attached	☐ Attached	☐ Remote
☒ Light Source	Examination Location Description/Remarks	Remote Examination Conditions/Equipment Remarks	
☐ 6" Scale	Drywell Penetration X-33	N/A	
☐ Other			

Examination Results, Details and Comments:

Examined this penetration with no findings identified. Results are satisfactory.

Examiner: Ralph Barnell Level Responsible Engineer Date 1/15/01

Examiner: N/A Level N/A Date N/A

Reviewer: N/A Date N/A

Reviewer: N/A Date N/A

ANII: [illegible] Date 1-31-01

Data Sheet No: IWE-GV-364

Work Order No.: 00-005035

Procedure No/Rev.: PP 7024/0

Page 1 of 1 Date: 1/16/01

Vermont Yankee
Visual Examination Report Form for General Visual (IWE)

Component

Component ID: X-34 System: Drywell

Drawing No/Rev.: 5920-41 Location: External Surfaces

Visual Aids	Photo	Sketch	Method
☐ Binoculars	☒ None	☒ None	☒ Direct General
☐ Mirror	☐ Attached	☐ Attached	☐ Remote
☒ Light Source	Examination Location Description/Remarks	Remote Examination Conditions/Equipment Remarks	
☐ 6" Scale	Drywell Penetration X-34	N/A	
☐ Other			

Examination Results, Details and Comments:

The Styro foam spacer material used between the steel containment and the concrete pour is visible at this penetration. This is part of the original construction design. Vacuumed concrete penetration sleeve. Examined this penetration with no findings identified. Results are satisfactory.

Examiner: Ralph Connell Level Responsible Engineer Date 1/16/01

Examiner: N/A Level N/A Date N/A

Reviewer: N/A Date N/A

Reviewer: N/A Date N/A

ANII: [signature] Date 1-31-01

Data Sheet No: 8047-01-035

Work Order No.: 00-5037

Procedure No/Rev.: 8047 R0

Page 1 of 1 Date: 5/1/01

Vermont Yankee
Visual Examination Report Form for General Visual (IWE)

Component

Component ID: X-34 System: Drywell

Drawing No/Rev.: 5920-41 Location: Drywell

Visual Aids	Photo	Sketch	Method
☐ Binoculars	☒ None	☒ None	☒ Direct General
☐ Mirror	☐ Attached	☐ Attached	☐ Remote
☒ Light Source	Examination Location Description/Remarks	Remote Examination Conditions/Equipment Remarks	
☐ 6" Scale	Internal Surface Drywell Pene.	N/A	
☐ Other			

Examination Results, Details and Comments:

Results of this Examination are satisfactory with no findings.

Examiner: [signature] Level Resp Eng Date 5/1/01

Examiner: N/A Level N/A Date N/A

Reviewer: [signature] Date 5/1/01

Reviewer: N/A Date N/A

ANII: [signature] Date 5-2-01

Vermont Yankee
Visual Examination Report Form for General Visual (IWE)

Data Sheet No: IWE-GV-363
Work Order No.: 00-005035
Procedure No/Rev.: PP7024/0
Page 1 of 1 Date: 1/16/01

Component

Component ID: X-39 A+B System: Drywell
Drawing No/Rev.: 5920-41 Location: External Surfaces

Visual Aids	Photo	Sketch	Method
☐ Binoculars	☒ None	☒ None	☒ Direct General
☐ Mirror	☐ Attached	☐ Attached	☐ Remote
☒ Light Source	Examination Location Description/Remarks	Remote Examination Conditions/Equipment Remarks	
☐ 6" Scale	Drywell Penetrations X-39 A+B	N/A	
☐ Other			

Examination Results, Details and Comments:

Examined Penetration X-39 B on 1/15/01 with no findings identified. Results are satisfactory for X-39B. Penetration X-39A is inaccessibly for External examination due to insulation in place which blocks viewing access to Penetration. X-39A is inaccessibly for General Visual Exam.

Examiner: Ralph Connell Level Responsible Engineer Date 1/16/01
Examiner: N/A Level N/A Date N/A
Reviewer: N/A Date N/A
Reviewer: N/A Date N/A
ANII: [signature] Date 1-31-01

Data Sheet No: 8047-01-034

Work Order No.: 00-5036

Procedure No/Rev.: 8047 R0

Page 1 of 1 Date: 5/1/01

Vermont Yankee
Visual Examination Report Form for General Visual (IWE)

Component

Component ID: X-41 System: Drywell

Drawing No/Rev.: 5920-41 Location: Reactor Building

Visual Aids	Photo	Sketch	Method
☐ Binoculars	☒ None	☒ None	☒ Direct General
☐ Mirror	☐ Attached	☐ Attached	☐ Remote
☒ Light Source	Examination Location Description/Remarks	Remote Examination Conditions/Equipment Remarks	
☐ 6" Scale	External Surface Drywell Pene	N/A	
☐ Other			

Examination Results, Details and Comments:

Results of this Examination Are Satisfactory with no findings.

Examiner: [signature] Level Prof. Eng Date 5/1/01

Examiner: N/A Level N/A Date N/A

Reviewer: [signature] Date 5/1/01

Reviewer: N/A Date N/A

ANII: [signature] Date 5-2-01

Data Sheet No: IWE-GV-362

Work Order No.: 00-005035

Procedure No/Rev.: PP7024/0

Page 1 of 1 Date: 1/15/01

Vermont Yankee
Visual Examination Report Form for General Visual (IWE)

Component

Component ID: X-42 System: Drywell

Drawing No/Rev.: 5920-41 Location: External Surfaces

Visual Aids	Photo	Sketch	Method
☐ Binoculars	☒ None	☒ None	☒ Direct General
☐ Mirror	☐ Attached	☐ Attached	☐ Remote
☒ Light Source	Examination Location Description/Remarks	Remote Examination Conditions/Equipment Remarks	
☐ 6" Scale	Drywell Penetration X-42	N/A	
☐ Other			

Examination Results, Details and Comments:

Examined this Penetration with no findings identified, Results are satisfactory.

Examiner: Ralph Connell Level Responsible Engineer Date 1/15/01

Examiner: N/A Level N/A Date N/A

Reviewer: N/A Date N/A

Reviewer: N/A Date N/A

ANII: V. Yerk Date 1-31-01

VYNEF 8047.06
NE 8047 Original
Page 1 of 1

Data Sheet No: ~~8058~~ 8047-01-049 (RB5-4-01)

Work Order No.: 00-5036

Procedure No/Rev.: 8047 R0

Page 1 of 1 Date: 5/4/01

Vermont Yankee
Visual Examination Report Form for General Visual (IWE)

Component

Component ID: X-43 System: Drywell

Drawing No/Rev.: 5920-41 Location: Reactor Building

Visual Aids	Photo	Sketch	Method
☐ Binoculars	☒ None	☒ None	☒ Direct General
☐ Mirror	☐ Attached	☐ Attached	☐ Remote
☒ Light Source	Examination Location Description/Remarks	Remote Examination Conditions/Equipment Remarks	
☐ 6" Scale	External Surface Drywell Pene.	N/A	
☐ Other			

Examination Results, Details and Comments:

This penetration is not safely accessible from the exterior due to elevation of penetration and Plant equipment Runs located at potential Ladder access points. Examination of the portion of this penetration visible from the 252' Level is satisfactory with no findings.

Examiner: [signature] Level Resp Eng Date 5/4/01

Examiner: N/A Level N/A Date N/A

Reviewer: [signature] Date 5/4/01

Reviewer: N/A Date N/A

ANII: [signature] Date 5-5-01

Vermont Yankee
Visual Examination Report Form for General Visual (IWE)

Data Sheet No: IWE-GV-361

Work Order No.: 00-005035

Procedure No/Rev.: PP7024/0

Page 1 of 1 Date: 1/15/01

Component

Component ID: X-45 System: Drywell

Drawing No/Rev.: 5920-41 Location: External Surfaces

Visual Aids	Photo	Sketch	Method
☐ Binoculars	☒ None	☒ None	☒ Direct General
☐ Mirror	☐ Attached	☐ Attached	☐ Remote
☒ Light Source	Examination Location Description/Remarks	Remote Examination Conditions/Equipment Remarks	
☐ 6" Scale	Drywell Penetration X-45	N/A	
☐ Other			

Examination Results, Details and Comments:

Examined this penetration with no findings identified. Results are Satisfactory.

Examiner: Ralph Connell Level Responsible Engineer Date 1/15/01

Examiner: N/A Level N/A Date N/A

Reviewer: N/A Date N/A

Reviewer: N/A Date N/A

ANII: [signature] Date 1-31-01

VYNEF 8047.06
NE 8047 Original
Page 1 of 1

Data Sheet No: 8047-01-033

Work Order No.: 00-5036

Procedure No/Rev.: 8047 R0

Page 1 of 1 Date: 5/1/01

Vermont Yankee
Visual Examination Report Form for General Visual (IWE)

Component

Component ID: X-47 System: Drywell

Drawing No/Rev.: 5920-41 Location: Reactor Building

Visual Aids	Photo	Sketch	Method
☐ Binoculars	☒ None	☒ None	☒ Direct General
☐ Mirror	☐ Attached	☐ Attached	☐ Remote
☒ Light Source	Examination Location Description/Remarks	Remote Examination Conditions/Equipment Remarks	
☐ 6" Scale	External Surface	N/A	
☐ Other	Drywell Pane		

Examination Results, Details and Comments:

Results of this Examination are satisfactory with no findings.

Examiner: [signature] Level Resp. Eng. Date 5/1/01

Examiner: N/A Level N/A Date N/A

Reviewer: [signature] Date 5/1/01

Reviewer: N/A Date N/A

ANII: [signature] Date 5-1-01

Data Sheet No: IWE-GV-384

Work Order No.: 00-005035

Procedure No/Rev.: PP 7024/0

Page 1 of 1 Date: 1/16/01

Vermont Yankee
Visual Examination Report Form for General Visual (IWE)

Component

Component ID: X-48 System: Dry well

Drawing No/Rev.: 5920-41 Location: External Surface

Visual Aids	Photo	Sketch	Method
☒ Binoculars	☒ None	☒ None	☒ Direct General
☐ Mirror	☐ Attached	☐ Attached	☐ Remote
☒ Light Source	Examination Location Description/Remarks	Remote Examination Conditions/Equipment Remarks	
☐ 6" Scale	Dry well Penetration X-48	Binoculars + Light Viewed from Torus	
☐ Other			

Examination Results, Details and Comments:

Examined this Penetration from existing Vantage Point (Top of Torus). Examined this penetration with no findings identified. Results are satisfactory.

Examiner: Ralph Cornell Level Responsible Engineer Date 1/16/01

Examiner: N/A Level N/A Date N/A

Reviewer: N/A Date N/A

Reviewer: N/A Date N/A

ANII: [illegible] Date 1-3-01

VYNEF 8047.06
NE 8047 Original
Page 1 of 1

Data Sheet No: IWE-GV-387

Work Order No.: 00-00 5035

Procedure No/Rev.: PP 7024/0

Page 1 of 1 Date: 1/15/01

Vermont Yankee
Visual Examination Report Form for General Visual (IWE)

Component

Component ID: X-49 System: Dry Well

Drawing No/Rev.: 5920-41 Location: External Surface

Visual Aids	Photo	Sketch	Method
☐ Binoculars	☒ None	☒ None	☒ Direct General
☐ Mirror	☐ Attached	☐ Attached	☐ Remote
☒ Light Source	Examination Location Description/Remarks		Remote Examination Conditions/Equipment Remarks
☐ 6" Scale	Drywell Penetration X-49		N/A
☐ Other			

Examination Results, Details and Comments:

Examination of this Penetration results in no findings. Results are satisfactory.

Examiner: Ralph Connell Level Responsible Eng. Date 1/18/01

Examiner: N/A Level N/A Date N/A

Reviewer: N/A Date N/A

Reviewer: N/A Date N/A

ANII: R. Lyons Date 1-31-01

Data Sheet No: IWE-GV-386

Work Order No.: 00-00 50 35

Procedure No/Rev.: PP7024/0

Page 1 of 1 Date: 1/15/01

Vermont Yankee
Visual Examination Report Form for General Visual (IWE)

Component

Component ID: X-50 System: Dry Well

Drawing No/Rev.: 5920-41 Location: External Surface

Visual Aids	Photo	Sketch	Method
☐ Binoculars	☒ None	☒ None	☒ Direct General
☐ Mirror	☐ Attached	☐ Attached	☐ Remote
☒ Light Source	Examination Location Description/Remarks	Remote Examination Conditions/Equipment Remarks	
☐ 6" Scale	Dry well Penetration X-50	N/A	
☐ Other			

Examination Results, Details and Comments:

Vacuumed debris from Penetration sleeve. Examination of this Penetration results in no findings. Results are Satisfactory.

Examiner: [signature] Level Responsibly Engineer Date 1/15/01

Examiner: N/A Level N/A Date N/A

Reviewer: N/A Date N/A

Reviewer: N/A Date N/A

ANII: [signature] Date 1-31-01

VYNEF 8047.06
NE 8047 Original
Page 1 of 1

Data Sheet No: IWE-GV-385

Work Order No.: 00-005035

Procedure No/Rev.: PP 7024/0

Page 1 of 1 Date: 1/15/01

Vermont Yankee
Visual Examination Report Form for General Visual (IWE)

Component

Component ID: X-51 System: Drywell

Drawing No/Rev.: 5920-41 Location: External Surface

Visual Aids	Photo	Sketch	Method
☐ Binoculars	☒ None	☒ None	☒ Direct General
☐ Mirror	☐ Attached	☐ Attached	☐ Remote
☒ Light Source	Examination Location Description/Remarks	Remote Examination Conditions/Equipment Remarks	
☐ 6" Scale	Drywell Penetration X-51	N/A	
☐ Other			

Examination Results, Details and Comments:

Examined this penetration with no findings identified. Results are Satisfactory.

Examiner: Ralph C Connell Level Responsible Engineer Date 1/15/01

Examiner: N/A Level N/A Date N/A

Reviewer: N/A Date N/A

Reviewer: N/A Date N/A

ANII: [illegible] Date 1-31-01

Data Sheet No: IWE-GV-392

Work Order No.: 00-00 5035

Procedure No/Rev.: PP 7024/0

Page 1 of 1 Date: 1/15/01

Vermont Yankee
Visual Examination Report Form for General Visual (IWE)

Component

Component ID: X-52 System: Drywell

Drawing No/Rev.: 5920-41 Location: External Surfaces

Visual Aids	Photo	Sketch	Method
☐ Binoculars	☒ None	☒ None	☒ Direct General
☐ Mirror	☐ Attached	☐ Attached	☐ Remote
☒ Light Source	Examination Location Description/Remarks	Remote Examination Conditions/Equipment Remarks	
☐ 6" Scale	Drywell Penetration X-52	N/A	
☐ Other			

Examination Results, Details and Comments:

Examination of this Penetration results in No findings. Results are Satisfactory.

Examiner: Ralph Connell Level Responsible Engineer Date 1/15/01

Examiner: N/A Level N/A Date N/A

Reviewer: N/A Date N/A

Reviewer: N/A Date N/A

ANII: [signature] Date 1-31-01

Vermont Yankee
Visual Examination Report Form for General Visual (IWE)

Data Sheet No: IWE-GV-400
Work Order No.: 00-00 5035
Procedure No/Rev.: PP 7024/0
Page 1 of 1 Date: 1/15/01

Component

Component ID: X-101 A, B, C, + D System: Drywell
Drawing No/Rev.: 5920-41 Location: External

Visual Aids	Photo	Sketch	Method
☐ Binoculars	☒ None	☒ None	☒ Direct General
☒ Mirror	☐ Attached	☐ Attached	☐ Remote
☒ Light Source	Examination Location Description/Remarks	Remote Examination Conditions/Equipment Remarks	
☐ 6" Scale	Drywell Penetrations X-101 A, B, C, D	N/A	
☐ Other			

Examination Results, Details and Comments:

Examined Penetrations X-101 A, B, C + D with no findings identified. Results are satisfactory.

Examiner: Ralph Connell Level Responsible Engineer Date 1/15/01
Examiner: N/A Level N/A Date N/A
Reviewer: N/A Date N/A
Reviewer: N/A Date N/A
ANII: [illegible] Date 1-31-01

Data Sheet No: IWE-GV-399

Work Order No.: 00-005035

Procedure No/Rev.: PP7024/0

Page 1 of 1 Date: 1/15/01

Vermont Yankee
Visual Examination Report Form for General Visual (IWE)

Component

Component ID: X-100 A, B, C, + D System: Drywell

Drawing No/Rev.: 5920-41 Location: External Surfaces

Visual Aids	Photo	Sketch	Method
☐ Binoculars	☒ None	☒ None	☒ Direct General
☒ Mirror	☐ Attached	☐ Attached	☐ Remote
☒ Light Source	Examination Location Description/Remarks	Remote Examination Conditions/Equipment Remarks	
☐ 6" Scale	Drywell Penetrations X-100 A, B, C + D	N/A	
☐ Other			

Examination Results, Details and Comments:

Removed debris from X-100 D. Examined Penetrations X-100 A, B, C, + D with no findings. Results are satisfactory.

Examiner: Ralph Connell Level Responsible Engineer Date 1/15/01

Examiner: N/A Level N/A Date N/A

Reviewer: N/A Date N/A

Reviewer: N/A Date N/A

ANII: [illegible] Date 1-31-01

VYNEF 8047.06
NE 8047 Original
Page 1 of 1

Data Sheet No: IWE-GV-390

Work Order No.: 00-005035

Procedure No/Rev.: PP 7024/0

Page 1 of 1 Date: 1/15/01

Vermont Yankee
Visual Examination Report Form for General Visual (IWE)

Component

Component ID: X-102 System: Dry well

Drawing No/Rev.: 5920-41 Location: External Surfaces

Visual Aids	Photo	Sketch	Method
☐ Binoculars	☒ None	☒ None	☒ Direct General
☒ Mirror	☐ Attached	☐ Attached	☐ Remote
☒ Light Source	Examination Location Description/Remarks	Remote Examination Conditions/Equipment Remarks	
☐ 6" Scale	Drywell Penetration X-102	N/A	
☐ Other			

Examination Results, Details and Comments:

Examination of this penetration results in no Findings. Results are satisfactory.

Examiner: [signature] Level Responsible Engineer Date 1/15/01

Examiner: N/A Level N/A Date N/A

Reviewer: N/A Date N/A

Reviewer: N/A Date N/A

ANII: [signature] Date 1-31-01

VYNEF 8047.06
NE 8047 Original
Page 1 of 1

Data Sheet No: IWE-GU-391

Work Order No.: 00-005035

Procedure No/Rev.: PP 7024

Page 1 of 1 Date: 1/15/01

Vermont Yankee
Visual Examination Report Form for General Visual (IWE)

Component

Component ID: X-103 System: Drywell

Drawing No/Rev.: 5920-41 Location: External Surfaces

Visual Aids	Photo	Sketch	Method
☐ Binoculars	☒ None	☒ None	☐ Direct Not Performed,
☐ Mirror	☐ Attached	☐ Attached	☐ Remote In Accessible
☒ Light Source	Examination Location Description/Remarks		Remote Examination Conditions/Equipment Remarks
☐ 6" Scale	Drywell Penetration X-103		N/A
☐ Other			

Examination Results, Details and Comments:

The external surface of X-103 is not accessible for examination. No Examination was performed on the external surfaces. Access is blocked by Termination Box.

Examiner: Ralph Caswell Level Responsible Engineer Date 1/15/01

Examiner: N/A Level N/A Date N/A

Reviewer: N/A Date N/A

Reviewer: N/A Date N/A

ANII: [signature] Date 1-31-01

Vermont Yankee
Visual Examination Report Form for General Visual (IWE)

Data Sheet No: IWE-GV-401
Work Order No.: 00-00 5035
Procedure No/Rev.: PP 7024/0
Page 1 of 1 Date: 1/16/01

Component

Component ID: X-104 A,B,C System: Drywell
Drawing No/Rev.: 5920-41 Location: External

Visual Aids	Photo	Sketch	Method
☐ Binoculars	☒ None	☒ None	☒ Direct General
☒ Mirror	☐ Attached	☐ Attached	☐ Remote
☒ Light Source	Examination Location Description/Remarks	Remote Examination Conditions/Equipment Remarks	
☐ 6" Scale	Drywell Penetrations X-104 A,B,C.	N/A	
☐ Other			

Examination Results, Details and Comments:

Examined Penetrations X104 A, B + C with no findings identified. Results are Satisfactory

Examiner: Ralph Caswell Level Responsible Engineer Date 1/16/01
Examiner: N/A Level N/A Date N/A
Reviewer: N/A Date N/A
Reviewer: N/A Date N/A
ANII: [signature] Date 1-31-01

Data Sheet No: IWE-GV-402

Work Order No.: 00-00 5035

Procedure No/Rev.: PP 7024/0

Page 1 of 1 Date: 1/15/01

Vermont Yankee
Visual Examination Report Form for General Visual (IWE)

Component

Component ID: X-105 A, B, C + D System: Drywell

Drawing No/Rev.: 5920-41 Location: External

Visual Aids	Photo	Sketch	Method
☐ Binoculars	☒ None	☒ None	☒ Direct General
☒ Mirror	☐ Attached	☐ Attached	☐ Remote
☒ Light Source	Examination Location Description/Remarks		Remote Examination Conditions/Equipment Remarks
☐ 6" Scale	Drywell Penetrations X-105 A, B, C, + D		N/A
☐ Other			

Examination Results, Details and Comments:

Examined Penetrations X-105 A, B, C + D with no findings identified. Results are satisfactory.

Examiner: Ralph Connell Level Responsible Engineer Date 1/15/01

Examiner: N/A Level N/A Date N/A

Reviewer: N/A Date N/A

Reviewer: N/A Date N/A

ANII: [signature] Date 1-31-01

Data Sheet No: IWE-GV-389

Work Order No.: 00-005035

Procedure No/Rev.: PP 7024/0

Page 1 of 1 Date: 1/15/01

Vermont Yankee
Visual Examination Report Form for General Visual (IWE)

Component

Component ID: X-106 System: Drywell

Drawing No/Rev.: 5920-41 Location: External Surface

Visual Aids	Photo	Sketch	Method
☐ Binoculars	☒ None	☒ None	☒ Direct General
☒ Mirror	☐ Attached	☐ Attached	☐ Remote
☒ Light Source	Examination Location Description/Remarks	Remote Examination Conditions/Equipment Remarks	
☐ 6" Scale	Drywell Penetration X-106	N/A	
☐ Other			

Examination Results, Details and Comments:

Examination of this Penetration results in No findings. Results are Satisfactory.

Examiner: Ralph Connell Level Responsible Engineer Date 1/15/01

Examiner: N/A Level N/A Date N/A

Reviewer: N/A Date N/A

Reviewer: N/A Date N/A

ANII: [illegible] Date 1-31-01

Data Sheet No: IWE-GV-388

Work Order No.: 00-005035

Procedure No/Rev.: PP 7024/0

Page 1 of 1 Date: 1/15/01

Vermont Yankee
Visual Examination Report Form for General Visual (IWE)

Component

Component ID: X-107 System: Drywell

Drawing No/Rev.: 5920-41 Location: External Surface

Visual Aids	Photo	Sketch	Method
☐ Binoculars	☒ None	☒ None	☒ Direct General
☒ Mirror	☐ Attached	☐ Attached	☐ Remote
☒ Light Source	Examination Location Description/Remarks	Remote Examination Conditions/Equipment Remarks	
☐ 6" Scale	Drywell Penetration X-107	N/A	
☐ Other			

Examination Results, Details and Comments:

Removed debris from bottom of Concrete sleeve. Examination of this Penetration results in no findings. Results are satisfactory.

Examiner: Ralph Connell Level Responsible Engineer Date 1/15/01

Examiner: N/A Level N/A Date N/A

Reviewer: N/A Date N/A

Reviewer: N/A Date N/A

ANII: [signature] Date 1-31-01

Vermont Yankee
Visual Examination Report Form
VT-1, Containment Surfaces (IWE)

Data Sheet No: 8045-01-011

Work Order No.: 00-004617-000

Procedure No/Rev.: NE 8045 / REV. 1

Page 1 of 2 Date: 5-3-01

Component ID: X-200A (SOUTH MANWAY - TORUS) System: TORUS

Drawing No/Rev.: G-191167 Rev. 0

Visual Aids			Illumination Level Check		
☑ Mirror	☐ Illumination Card/No. VY8			Time	Date
☑ Light Source (Describe) FLASHLITE	☐ Other:		Initial 158	1:45 AM	5-4-01
Method	Photo	Sketch	Intermediate	NA	
☑ Direct	☑ None	☐ None	Intermediate	NA	
☐ Remote	☐ Attached	☑ Attached	Final 159	2:20 AM	5-4-01

Remote Examination Conditions/Equipment Remarks NA

	Acceptable	Recordable	N/A	Remarks/Observations
Cracks/Linears	WAS 5-3-01			28 OF 32 TACK WELDED
Physical Damage	WAS 5-3-01			NUTS UNDERSIDE OF FLANGE
Corrosion	WAS 5-3-01			IN TACT. 4 NUTS ie:
Erosion	WAS 5-3-01			"UNATTACHED" VT Reveals
Gouges	WAS 5-3-01			NO Residual TACK WELD
Wear	WAS 5-3-01			IN PLACE.
Arc Strikes	WAS 5-3-01			"SEE SKETCH"
Other (Explain)				

Examiner: [signature] Level: II Date: 5/4/01

Examiner: N/A Level: N/A Date: N/A

Reviewer: [signature] Date: 5/4/01

Reviewer: N/A Date: N/A

ANII: [signature] Date: 5-4-01

Evaluation Required? ☐ Yes ☑ No

Vermont Yankee
Visual Examination
Supplemental Report Form

Reference Data Sheet No: 8045-01-011
Page 2 of 2 Date: 5/4/01

Component

Component ID: X-200A System: TORUS

X-200A
So. MW TORUS

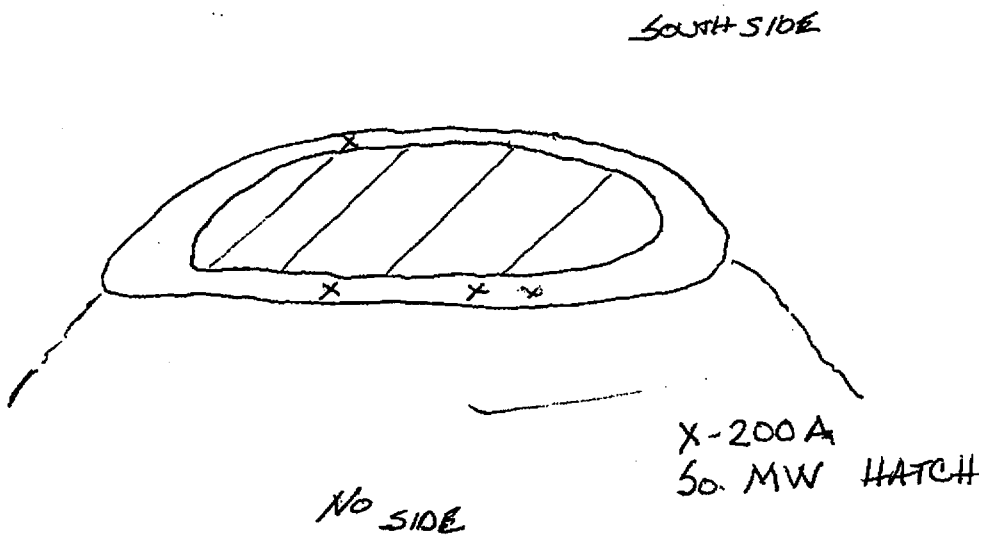

X = Represents Approximate Locations ie: UNDERSIDE NUTS NOT TACKED IN PLACE.

Examiner: [signature] II Level: II Date: 5-4-01
Examiner: N/A Level: N/A Date: N/A
Reviewer: [signature] Date: 5/4/01
Reviewer: N/A Date: N/A
ANII: [signature] Date: 5-4-1

Vermont Yankee
Visual Examination Report Form
VT-1, Bolting (IWE)

Data Sheet No: 8045-01-013
Work Order No.: 00-004617-000
Procedure No/Rev.: NE 8045 / REV. 1
Page 1 of 1 Date: 5-3-01

Component

Component ID: X-200A (SOUTH MANWAY TORUS) System: TORUS

Drawing No/Rev.: G-191167 REV. 0 Bolting Length: 4 7/8" Bolting Diameter: 5/8"

Photo/Sketch	Method	Examination	Bolting Components Examined	
☑ None	☑ Direct	☐ In Place	☑ Bolting	☐ Washers
☐ Attached	☐ Remote	☑ Removed	☐ Bushings	☐ Flange Surface

Visual Aids

☐ Magnifying Glass ☑ Illumination Card/No.: VY8
☐ Mirror ☑ Light Source (Describe): FLASHLIGHT

Remote Examination Conditions/Limitations: NA

Illumination Level Check	Time	Date
Initial 225	11:20 PM	5/3/01
Intermediate	NA	–
Intermediate	NA	–
Final 223	1:10 AM	5/4/01

Lightmeter S/N: 812153
Cal. Due Date: 4-13-02

	Acceptable	Recordable	N/A	Remarks/Observations
Loose/Missing			WAS 5-3-01	PKg. W.O. Page #5 Item -28
Thread Engagement			WAS 5-3-01	HEX HEAD A320 L7 @ 4½" L.
Thread Damage	WAS 5/3/01			ACTUAL COUNT IS 16:
Galling	WAS 5-3-01			32 HEX HEAD A320 L7 @
Coating Degradation			WAS 5-3-01	4 7/8 IN Length.
Bent/Twisted	WAS 5-3-01			
Physical Damage	WAS 5-3-01			
Fractured Parts	WAS 5-3-01			
Gouges	WAS 5-3-01			
Cracks/Linears	WAS 5-3-01			
Corrosion	WAS 5-3-01			
Erosion	WAS 5-3-01			
Wear	WAS 5-3-01			
Evidence of Leakage			WAS 5-3-01	
Other (Explain)			WAS 5-3-01	

Examiner: William A. Stell Level: II Date: 5-4-01
Examiner: N/A Level: N/A Date: N/A
Reviewer: [signature] Date: 5/4/01
Reviewer: N/A Date: N/A
ANII: [signature] Date: 5-4-01

Evaluation Required?
☐ Yes ☑ No

Vermont Yankee
Visual Examination Report Form
VT-1, Bolting (IWE)

Data Sheet No: 8045-01-015
Work Order No.: 00-004618-000
Procedure No/Rev.: NE 8045 Rev. 0
Page 1 of 1 Date: 5-5-01

Component

Component ID: TORUS MANWAY NORTH X-200B System: PRIMARY CONTAINMENT

Drawing No/Rev.: 9-6202 Rev. 0 Bolting Length: N/A " Bolting Diameter: 5/8 "

Photo/Sketch	Method	Examination	Bolting Components Examined	
■ None	■ Direct	☐ In Place	■ Bolting	☐ Washers
☐ Attached	☐ Remote	■ Removed	☐ Bushings	☐ Flange Surface

Visual Aids

☐ Magnifying Glass ■ Illumination Card/No.: VY8
■ Mirror ■ Light Source (Describe): FLASHLIGHT

Remote Examination Conditions/Limitations:

Illumination Level Check	Time	Date
Initial 133FC	7:10 AM	5-5-01
Intermediate	N/A	N/A
Intermediate	N/A	N/A
Final 98FC	8:05 AM	5-5-01

Lightmeter S/N: 812153
Cal. Due Date: 4-13-02

	Acceptable	Recordable	N/A	Remarks/Observations
Loose/Missing	J.E. 5-5-01			VERIFIED 32 - 5/8" HEAVY
Thread Engagement			J.E. 5-5-01	HEX NUTS, welded to the
Thread Damage	J.E. 5-5-01			bottom side of the man-
Galling	J.E. 5-5-01			way flange. ALL NUTS
Coating Degradation	J.E. 5-5-01			ARE COATED with PAINT.
Bent/Twisted	J.E. 5-5-01			Jed El-Hajj: 5-5-01
Physical Damage	J.E. 5-5-01			
Fractured Parts	J.E. 5-5-01			
Gouges	J.E. 5-5-01			
Cracks/Linears	J.E. 5-5-01			
Corrosion	J.E. 5-5-01			
Erosion	J.E. 5-5-01			
Wear	J.E. 5-5-01			
Evidence of Leakage	J.E. 5-5-01			
Other (Explain)			J.E. 5-5-01	

Examiner: Jed El-Hajj Level: II Date: 5-5-01
Examiner: N/A Level: N/A Date: N/A
Reviewer: Ralph Cameron Date: 5/5/01
Reviewer: N/A Date: N/A
ANII: M E Nelson Date: 5-5-01

Evaluation Required?
☐ Yes ☒ No

Vermont Yankee
Visual Examination Report Form
VT-1, Bolting (IWE)

Data Sheet No: 8045-01-012
Work Order No.: 00-004618-000
Procedure No/Rev.: NE 8045 REV. 1
Page 1 of 1 Date: 5-3-01

Component

Component ID: TORUS MANWAY North X-200B System: TORUS

Drawing No/Rev.: 9-6202 Rev. 0 Bolting Length: CAPSCREW 4 1/2" Bolting Diameter: 5/8"

Photo/Sketch	Method	Examination	Bolting Components Examined	
■ None	■ Direct	☐ In Place	■ Bolting	☐ Washers
☐ Attached	☐ Remote	■ Removed	☐ Bushings	☐ Flange Surface

Visual Aids

☐ Magnifying Glass ■ Illumination Card/No.: VY8
☐ Mirror ■ Light Source (Describe): Flashlight

Remote Examination Conditions/Limitations: N/A

Illumination Level Check	Time	Date
Initial PRE 228	3:45	5-3-01
Intermediate	N/A	N/A
Intermediate	N/A	N/A
Final POST 222	4:50	5-3-01
Lightmeter S/N: 812153		
Cal. Due Date: 4-13-02		

	Acceptable	Recordable	N/A	Remarks/Observations
Loose/Missing			J.E. 5-3-01	VERIFIED: 32, 5/8"Ø X 4 1/2" Lg. X
Thread Engagement			J.E. 5-3-01	11 TPI. ASTM A320 Gr. L7
Thread Damage	J.E. 5-3-01			HEX HEAD CAP SCREWS.
Galling	J.E. 5-3-01			MFG. I.D. 1.
Coating Degradation			J.E. 5-3-01	
Bent/Twisted	J.E. 5-3-01			
Physical Damage	J.E. 5-3-01			
Fractured Parts	J.E. 5-3-01			
Gouges	J.E. 5-3-01			
Cracks/Linears	J.E. 5-3-01			
Corrosion	J.E. 5-3-01			
Erosion	J.E. 5-3-01			
Wear	J.E. 5-3-01			
Evidence of Leakage			J.E. 5-3-01	
Other (Explain)			J.E. 5-3-01	

Examiner: Ted El-Hajj Level: II Date: 5-3-01
Examiner: N/A Level: N/A Date: N/A
Reviewer: [signature] Date: 5/4/01
Reviewer: N/A Date: N/A
ANII: [signature] Date: 5-4-01

Evaluation Required?
☐ Yes ■ No

Vermont Yankee
Visual Examination Report Form for General Visual (IWE)

Data Sheet No: IWE-GV-397
Work Order No.: 00-005035
Procedure No/Rev.: PP 7024/0
Page 1 of 1 Date: 1/16/01

Component

Component ID: X-201 A thru H System: Torus
Drawing No/Rev.: 6202-200 Location: Exterior Surfaces

Visual Aids	Photo	Sketch	Method
☐ Binoculars	☒ None	☒ None	☒ Direct General
☐ Mirror	☐ Attached	☐ Attached	☐ Remote
☒ Light Source	Examination Location Description/Remarks		Remote Examination Conditions/Equipment Remarks
☐ 6" Scale	Torus Penetrations X-201 A, B, C, D, E, F, G, H		N/A
☐ Other			

Examination Results, Details and Comments:

Performed General Visual Examinations on external surfaces of all X-201 penetrations with no findings. Satisfactory

Examiner: Ralph Connell Level Responsible Engineer Date 1/16/01
Examiner: N/A Level N/A Date N/A
Reviewer: N/A Date N/A
Reviewer: N/A Date N/A
ANII: [signature] Date 1-31-01

Data Sheet No: INE-GV-396

Work Order No.: 00-005035

Procedure No/Rev.: PP 7024/0

Page 1 of 1 Date: 1/16/01

Vermont Yankee
Visual Examination Report Form for General Visual (IWE)

Component

Component ID: X-203 A thru F System: Torus

Drawing No/Rev.: 6202-200 Location: External Surfaces

Visual Aids	Photo	Sketch	Method
☐ Binoculars	☒ None	☒ None	☒ Direct General
☐ Mirror	☐ Attached	☐ Attached	☐ Remote
☒ Light Source	Examination Location Description/Remarks		Remote Examination Conditions/Equipment Remarks
☐ 6" Scale	Torus Penetrations X-203 A, B, C, D, E, F		N/A
☐ Other			

Examination Results, Details and Comments:

Performed General Visual Examination on external surfaces of X 203 A thru F penetrations with No Findings. Satisfactory

Examiner: Ralph Connell Level Responsible Eng. Neer Date 1/16/01

Examiner: N/A Level N/A Date N/A

Reviewer: N/A Date N/A

Reviewer: N/A Date N/A

ANII: [signature] Date 1-31-01

Data Sheet No: IWE-GV-395

Work Order No.: 00-005035

Procedure No/Rev.: PP 7024/0

Page 1 of 1 Date: 1/16/01

Vermont Yankee
Visual Examination Report Form for General Visual (IWE)

Component

Component ID: X-203 G + H System: Torus

Drawing No/Rev.: 6202-200 Location: External Surfaces

Visual Aids	Photo	Sketch	Method
☐ Binoculars	☒ None	☒ None	☒ Direct General
☐ Mirror	☐ Attached	☐ Attached	☐ Remote
☒ Light Source	Examination Location Description/Remarks		Remote Examination Conditions/Equipment Remarks
☐ 6" Scale	Torus Penetrations X 203 G + H		N/A
☐ Other			

Examination Results, Details and Comments:

Performed General Visual Examinations on external surfaces of X 203 G + H penetrations with no Findings. Satisfactory

Examiner: Ralph Connell Level Responsible Engineer Date 1/16/01

Examiner: N/A Level N/A Date N/A

Reviewer: N/A Date N/A

Reviewer: N/A Date N/A

ANII: [signature] Date 1-31-01

VYNEF 8047.06
NE 8047 Original
Page 1 of 1

Data Sheet No: 8047-01-32

Work Order No.: 00-5037

Procedure No/Rev.: 8047 R0

Page 1 of 1 Date: 5/1/01

Vermont Yankee
Visual Examination Report Form for General Visual (IWE)

Component

Component ID: X-207 A, B, C, D, E, F, G, & H System: Torus/Drywell

Drawing No/Rev.: 5920-42 Location: Vent Header

Visual Aids	Photo	Sketch	Method
☐ Binoculars	☒ None	☒ None	☒ Direct General
☐ Mirror	☐ Attached	☐ Attached	☐ Remote
☒ Light Source	Examination Location Description/Remarks	Remote Examination Conditions/Equipment Remarks	
☐ 6" Scale	Internal Exam From Vent Header Interior	N/A	
☐ Other			

Examination Results, Details and Comments:

The internal surface of ALL 8 X-207 penetrations have general corrosion with metal loss. Maximum metal loss estimated .025".

See IDR 01-08

Examiner: Ralph Cowell Level Resp Eng. Date 5/1/01

Examiner: Dennis Lemoir Level Rating Date 5/1/01

Reviewer: DeLemoir Date 5/1/01

Reviewer: NA Date NA

ANII: [illegible] Date 5-2-01

VYNEF 8047.06
NE 8047 Original
Page 1 of 1

INSERVICE DISCREPANCY REPORT (IDR)

IDR #: 01-08

Date: 5/2/2001

Component: X-207A - H

Location: Drywell

DOH 5/2/01

Discrepancy: General corrosion with metal loss ~~increase of~~ No Allowable values provided by Design Engineering. All corrosion areas have lost all coating coverage. See attached Report (General Visual) # 8047-01-32

ISI Supervisor: D K Mussoni Date: 5/2/01

System Operability Affected: YES ___ NO X BY: DOH Date: 5/2/01

Shift Supervisor Notified: YES ___ NO X BY: DOH Date: 5/2/01

Event Report Initiated: YES ___ NO X BY: DOH Date: 5/2/01

Mechanical Design Engineering Evaluation: _____

Performed By: _____ Date: _____

Disposition/Repair: _____

ISI Program Coordinator: _____ Date: _____

Repair Effort:

Reference Document: _____

Repair Completion Date: _____

Service Induced: YES ___ NO ___ BY: ___ Date: ___

Sample Expansion Required: YES ___ NO ___ BY: ___ Date: ___

Sample Expansion: _____

ISI Program Coordinator: _____ Date: _____

Reinspection Required: YES ___ NO ___ BY: ___

Subsequent Inspection Required: YES ___ NO ___ BY: ___

ISI Supervisor Notified:

ISI Program Coordinator: _____ Date: _____

Reinspection Completed Satisfactorily:

ISI Supervisor: _____ Date: _____

IDR Closed:

ISI Program Coordinator: _____ Date: _____

INSERVICE DISCREPANCY REPORT (IDR)

IDR #: 01-07

Date: 5/2/2001

Component: Vent Header Location: Drywell

Discrepancy: Pitting and general corrosion in excess of allowable values provided by Design Engineering. All corrosion areas have lost all coating coverage. Vent Header Bank H contains significant water level. See General Visual Examination Report # 8047-01-031 Attached.

ISI Supervisor: [signature] Date: 5/2/01

System Operability Affected: YES ___ NO X* BY: [signature] Date: 5/2/01

Shift Supervisor Notified: YES ___ NO X BY: [signature] Date: 5/2/01

Event Report Initiated: YES ___ NO X BY: [signature] Date: 5/2/01

* to be further reviewed by Design Eng

Mechanical Design Engineering Evaluation:

CONDITION EVALUATED IN TEC No. 2001-0025 (IDR 01-07 & 01-08)

Performed By: [signature] Date: 5/5/01

Disposition/Repair: ACCEPTABLE AS IS, NO REPAIRS REQUIRED

ISI Program Coordinator: [signature] Date: 5/5/01

Repair Effort:

Reference Document: NA

Repair Completion Date: NA

Service Induced: YES X NO ___ BY: [signature] Date: 5/5/01

Sample Expansion Required: YES ___ NO X BY: [signature] Date: 5/5/01

Sample Expansion: This is an IWE exam and therefore expansion is not required. However 100% of the areas were examined

ISI Program Coordinator: [signature] Date: 5/5/01

Reinspection Required: YES ___ NO X BY: [signature]

Subsequent Inspection Required: YES ___ NO X BY: [signature]

ISI Supervisor Notified:

ISI Program Coordinator: [signature] Date: 5/5/01

Reinspection Completed Satisfactorily:

ISI Supervisor: [signature] Date: 5/5/01

IDR Closed:

ISI Program Coordinator: [signature] Date: 5/5/01

Data Sheet No: 8047-01-031

Work Order No.: 00-5037

Procedure No/Rev.: 8047 R0

Page 1 of 9 Date: 5/1/01

Vermont Yankee
Visual Examination Report Form for General Visual (IWE)

Component

Component ID: Vent Header System: Drywell

Drawing No/Rev.: 6202-200 Location: Drywell

Visual Aids	Photo	Sketch	Method
☐ Binoculars	☒ None	☐ None 8 pages	☑ Direct General
☐ Mirror	☐ Attached	☒ Attached	☐ Remote
☒ Light Source	Examination Location Description/Remarks	Remote Examination Conditions/Equipment Remarks	
☐ 6" Scale	Interior surface of Vent Header	N/A	
☐ Other			

Examination Results, Details and Comments:

This General Visual examination identified areas of pitting corrosion and general corrosion. The affected areas are identified on the attached drawings, pages 2-9. All areas with pitting ≥ .025" require evaluation by Design Engineering and all areas of pitting in vent header within 6" of the vent header to vent header bowl weld require evaluation by design engineering. Areas of corrosion have lost coating coverage and will require disposition. Acceptance criteria provided per memo to J. H. Callaghan from J.C. Fitzpatrick 12/7/99. Vent header bowl "H" contains significant water and requires disposition by Design Engineering. All vent header to vent header bowl interfaces require evaluation. Pitting identified all have separation of > 3 pit diameters.

See IDR 01-07

Examiner: Ralph Connell Level Resp. Eng. Date 5/1/01

Examiner: Dennis Dickson Level Resp. Eng. Date 5/1/01

Reviewer: D Dickson Date 5/1/01

Reviewer: NA Date NA

ANII: W E Kelly Date 5-7-01

8047-01-031
page 2 of 9

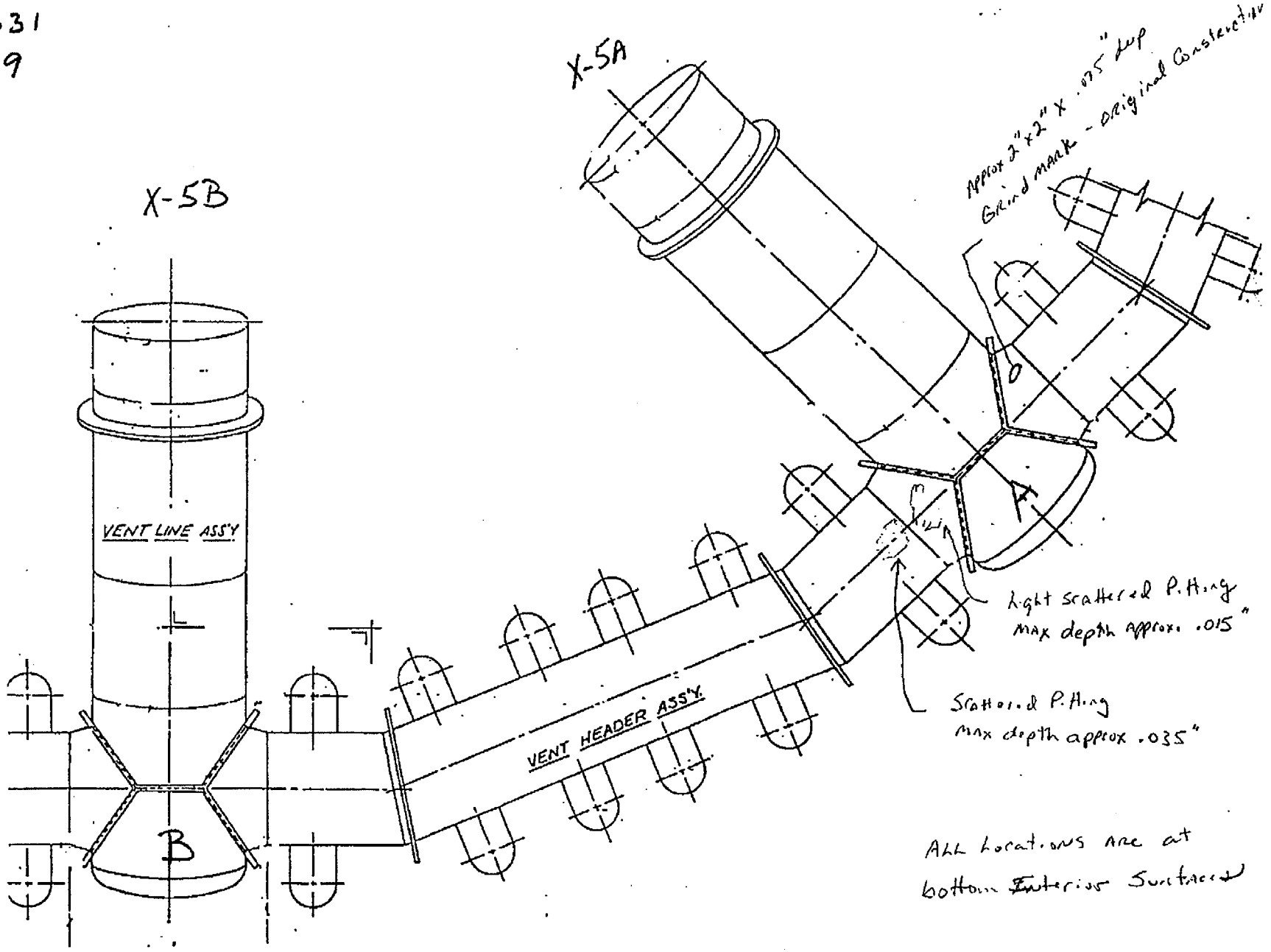

8047-01-031
page 3 of 9

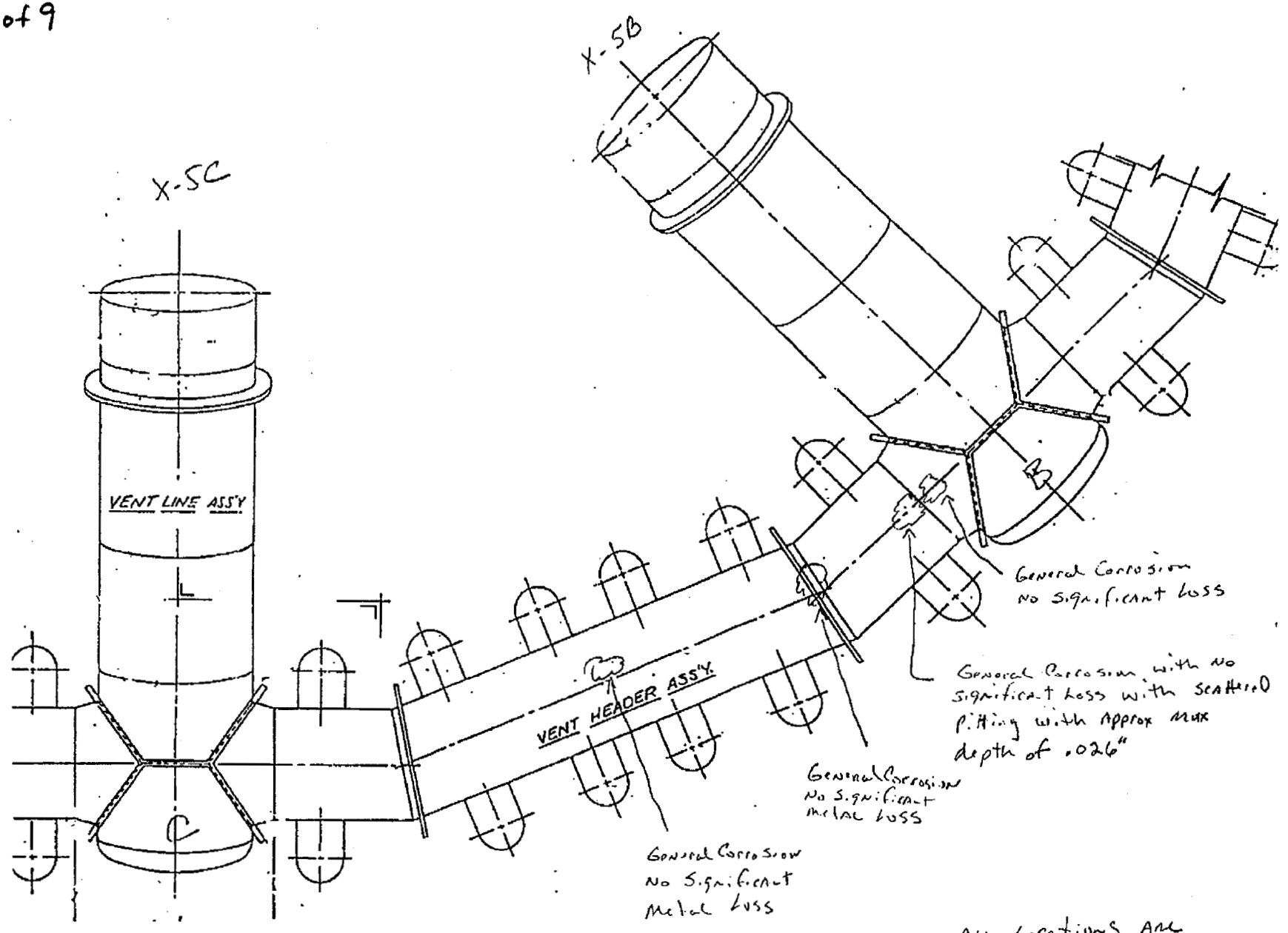

ALL Locations ARE
AT bottom Interior
Surface

8047-01-031
page 4 of 9

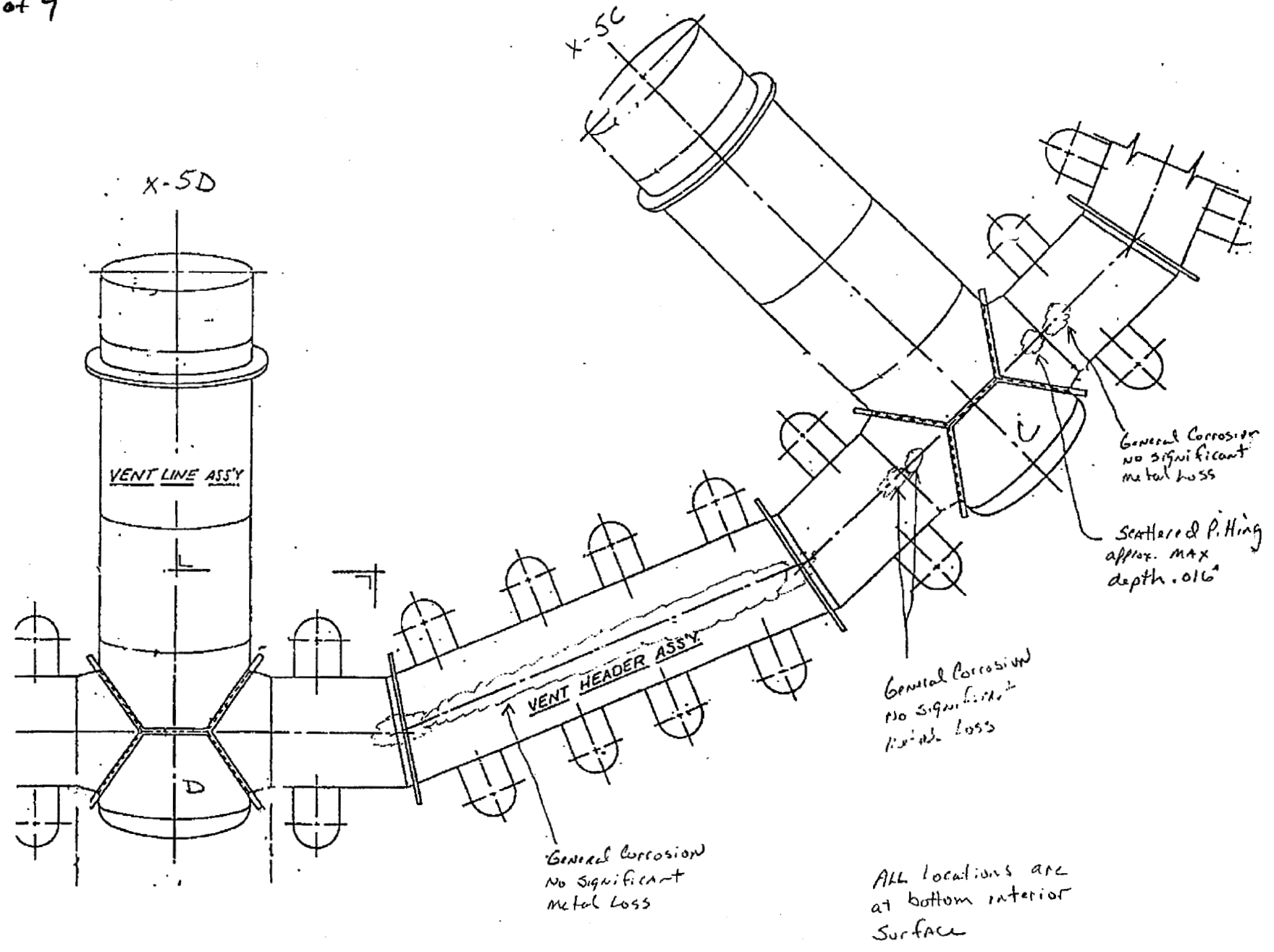

ALL locations are at bottom interior surface

8047-01-031
page 5 of 9

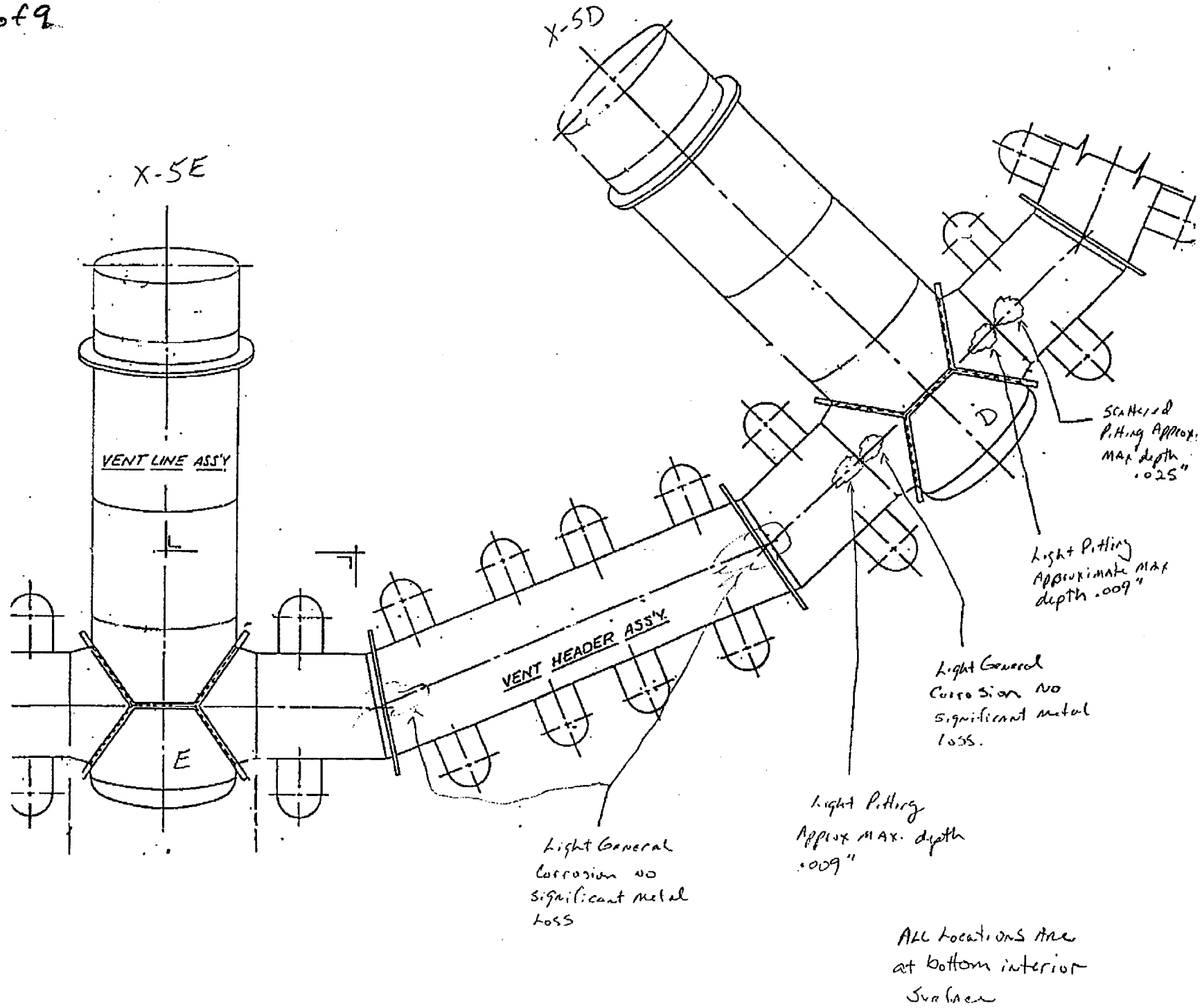

8047-01-031
Page 6 of 9

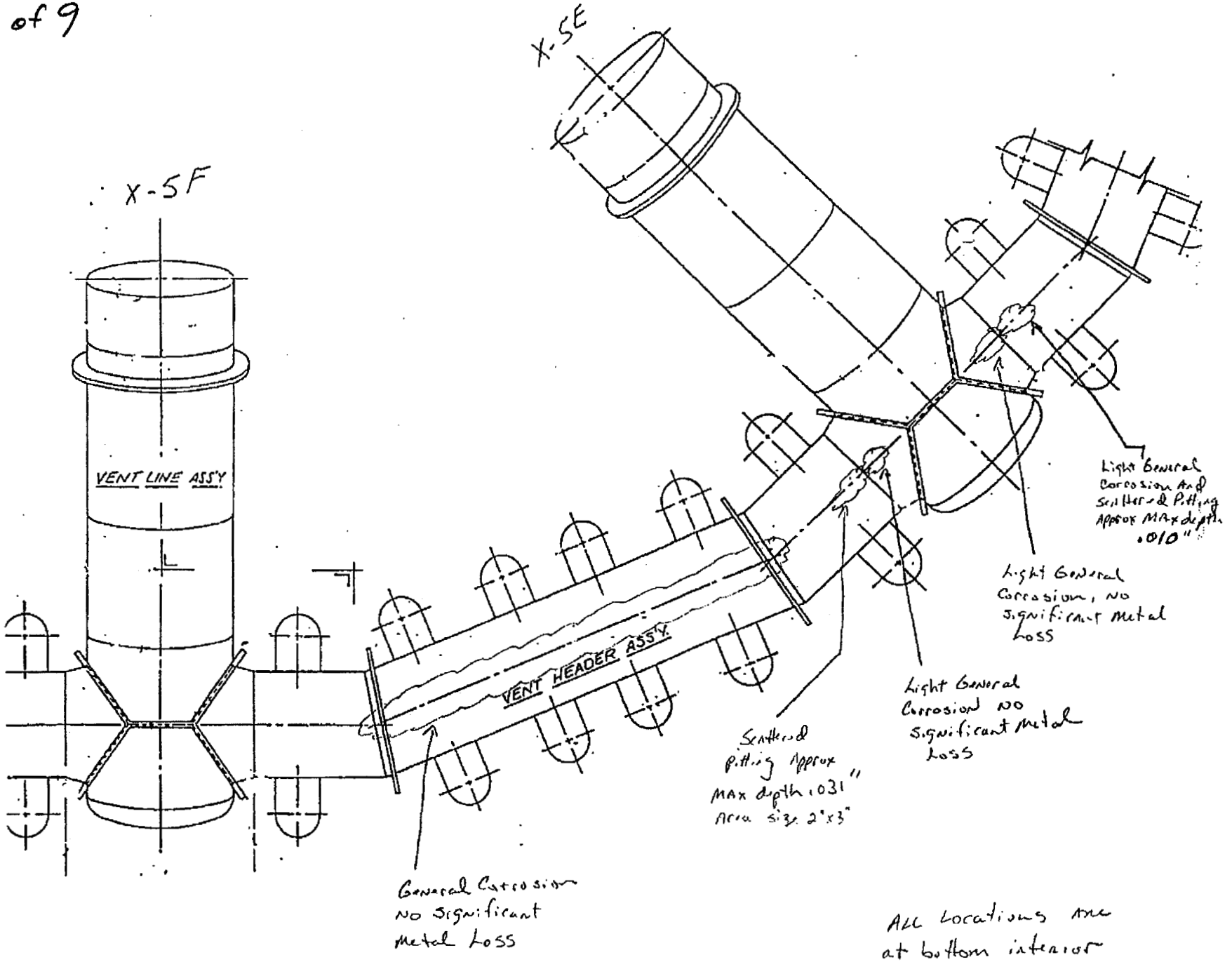

ALL Locations are at bottom interior surfaces.

8047-01-031
page 7 of 9

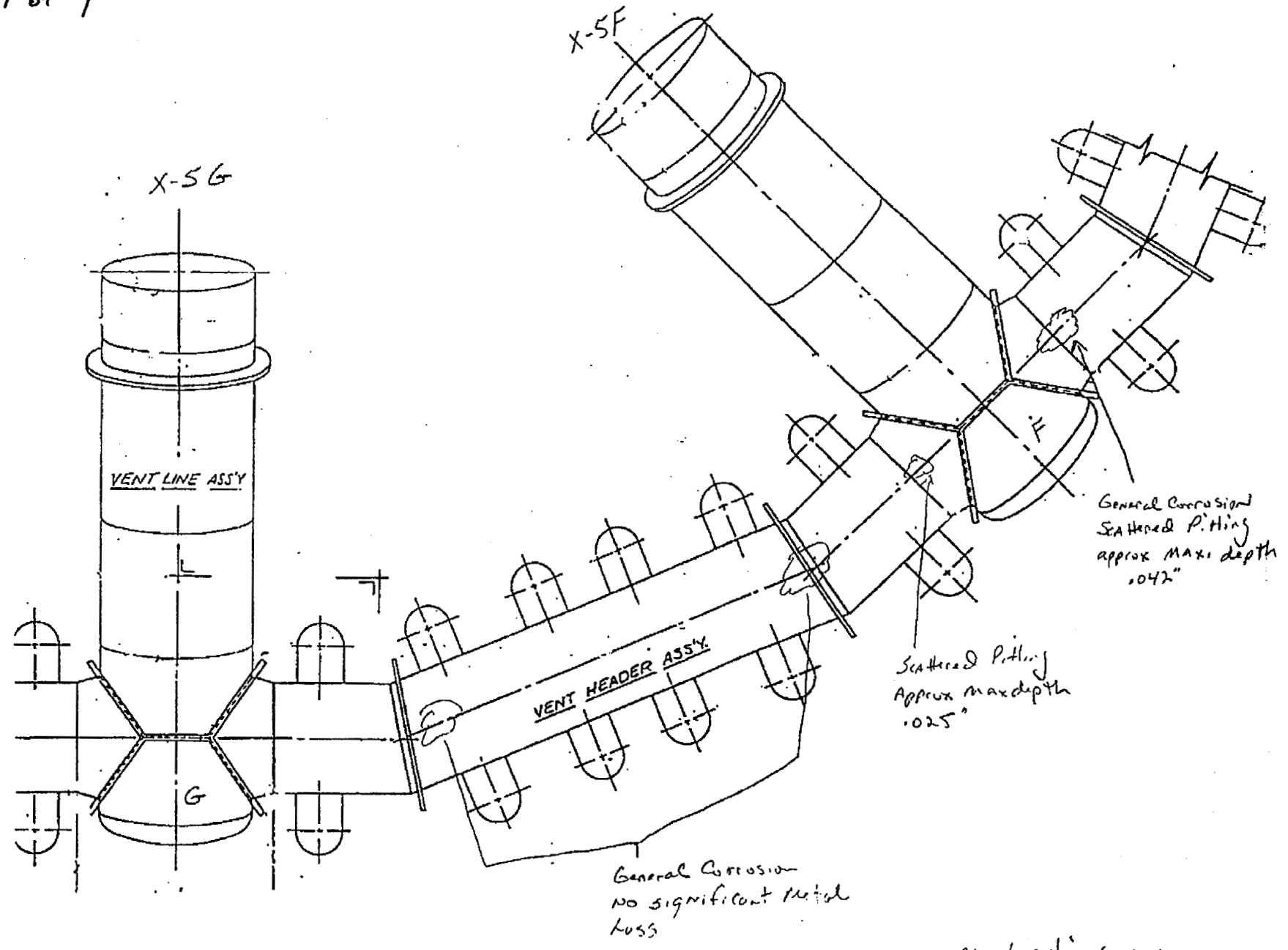

All locations are at bottom interior surface.

8047-01-031
page 8 of 9

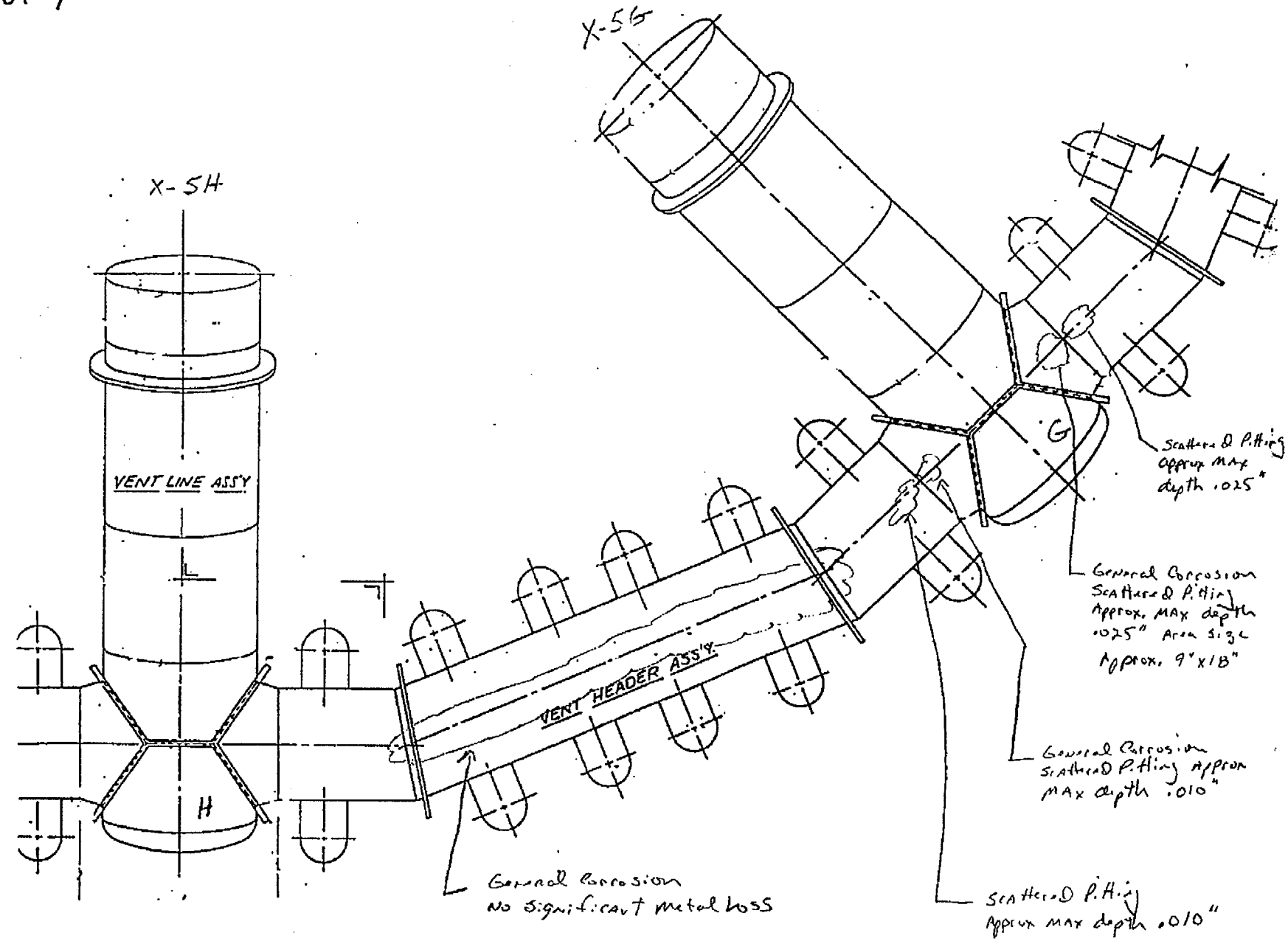

ALL locations are at Bottom interior Surface

8047-01-031
page 9 of 9

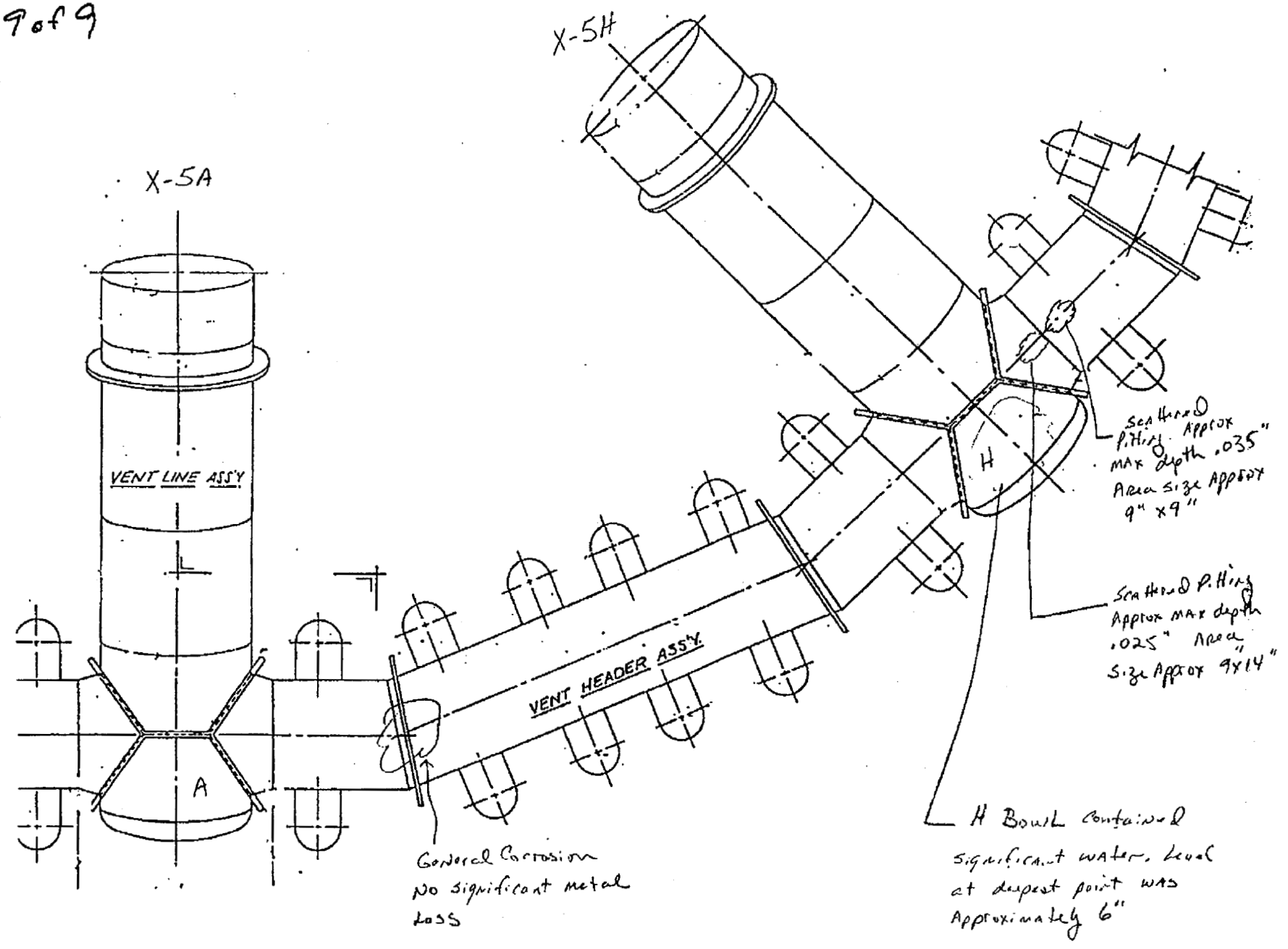

ALL Locations Are at Bottom interior Surface.

Data Sheet No: 8047-01-32

Work Order No.: 00-5037

Procedure No/Rev.: 8047 R0

Page 1 of 1 Date: 5/1/01

Vermont Yankee
Visual Examination Report Form for General Visual (IWE)

Component

Component ID: X-207 A, B, C, D, E, F, G, + H System: Torus/Drywell

Drawing No/Rev.: 5920-42 Location: Vent Header

Visual Aids	Photo	Sketch	Method
☐ Binoculars	☒ None	☒ None	☒ Direct General
☐ Mirror	☐ Attached	☐ Attached	☐ Remote
☒ Light Source	Examination Location Description/Remarks	Remote Examination Conditions/Equipment Remarks	
☐ 6" Scale	Internal Exam From Vent Header Interior	N/A	
☐ Other			

Examination Results, Details and Comments:

The internal surface of ALL 8 X-207 penetrations have general corrosion with metal loss. Maximum metal loss estimated .025".

See IDR 01-08

Examiner: Ralph Powell Level Resp Eng. Date 5/1/01

Examiner: Dennis Lewis Level Rigging Date 5/1/01

Reviewer: DCKinion Date 5/1/01

Reviewer: NA Date NA

ANII: Date

VYNEF 8047.06
NE 8047 Original
Page 1 of 1

VERMONT YANKEE TECHNICAL EVALUATION DOCUMENTATION

Technical Evaluation No. 2001-025

Title: **EVALUATION OF ASME SECTION XI – IWE FINDINGS FOR IDR 01-07 & IDR 01-08**

☒ QA (Safety Class, OQA, or Vital Fire) ☐ Non QA (Non-Safety) (Check One)

Background

This T.E. evaluates findings from the IWE inspections of the vent header and vent pipe bowls in the VY primary containment. Specifically addressed are Inservice Discrepancy Reports (IDR) Nos. 01-07 and 01-08, design inputs (DI) 1 & 2.

Visual Inspections are performed on the VY primary containment in accordance with the American Society of Mechanical Engineers (ASME) Code Section XI, Subsection IWE. The purpose of the inspections is to identify degradation of coatings and metal wall loss to insure the continued structural integrity of the primary containment. The inspectors use a pre-evaluated acceptance criteria, DI (3), to screen inspection results. The pre-evaluated criteria is based on VY calculation VYC-1032, Rev.1, DI (4), it serves as a threshold for further evaluation of the results by Design Engineering.

IDR 01-07 identifies areas of general pitting and general corrosion in the vent header and the vent pipe bowls. DI (3) requires any indications adjacent to the vent header mitre joints, downcomer intersections, and vent pipe/header intersections be forwarded to Design Engineering for evaluation.

IDR 01-08 identifies corrosion on the internal surfaces of all (8) of the X-207 penetrations. These penetrations were the low point drain in the bottom of each vent pipe bowl. DI's (3) & (4) do not specifically address corrosion in the X-207 penetrations. The findings were forwarded to Design Engineering for evaluation.

Discussion

IDR 01-07

IDR 01-07 identifies areas of general pitting and general corrosion in the vent header and the vent pipe bowls. A summary of the findings from IDR 01-07 is attached to this TE as Table 1. As indicated on page 1 of 9 of Data Sheet No. 8047-01-031, the pitting areas identified have a minimum separation of (3) pit diameters. Areas identified with local pitting in the vent pipe bowls and in the vent header within 4 inches of the vent pipe/header intersections require an evaluation by Design Engineering. This TE will evaluate the findings shown in Table 1 against the acceptance criteria contained in DI (4).

As shown in Table 1, localized pitting was found in the lower portions of all (8) vent pipe bowls. The areas of pitting correspond to zones 1 and 3 as shown in Figure 27 in Attachment A of VYC-1032, Rev. 1, DI (4). Permissible size indications for these zones are given in Figures 28 and 30 from DI (4) for zones 1 and 3 respectively. The limiting zone is zone 1. All pitting in the vent pipe bowls will be evaluated using an enveloping comparison for zone 1. From DI (3), a pit is

defined as a small area of surface corrosion less than 0.5 inch in diameter.

To envelop pitting found in the vent pipe bowls, the allowable depth of a 1 inch diameter surface indication will be compared against the largest measured pit depth from Table 1. Note that the areas of localized pitting shown in Table 1 only define the areas of pitting, not a zone of wall loss. From Figure 28, for a 1 inch diameter indication an allowable depth is greater than 0.10 inch. From Table 1 the maximum pit depth for the vent pipe bowls is 0.042 inches in X-5F. Therefore all observed pitting in the vent pipe bowls is acceptable.

To envelop pitting found in the vent header, the same approach as for the vent pipe bowls will be used. Since the pitting is adjacent to the vent pipe intersection, Figure 30 for zone 3 will be used. From Figure 30; for a 1 inch diameter indication, an allowable depth is greater than 0.12 inch. From Table 1 the maximum pit depth for the vent header is 0.042 inches adjacent to X-5F. Therefore all observed pitting in the vent header is acceptable.

The standing water found in the in the bottom of the bowl at X-5H along with any other standing water accumulated in the other bowls during this refueling outage will be removed prior to drywell closeout per 5/4/01 telecon with B.Tietze, VY Facilities Supervisor.

IDR 01-08

IDR 01-08 identifies corrosion on the internal surfaces of all (8) of the X-207 penetrations, X-207 A to X-207H. DI's (3) & (4) do not specifically address corrosion in the X-207 penetrations. The results were forwarded to Design Engineering for evaluation.

Each of these penetrations was the low point drain in the bottom of each vent pipe bowl. The original design of the X-207 penetration was a 1 inch nominal pipe which extended from the bottom of the vent pipe bowl down to an elevation below the Torus water level. These lines were removed and the pipe stubs were capped during the Torus Mark I Program Modifications under EDCR 80-11. Details are shown on VY drawings No. 6202-213 and 5920-9152, DI's (6) & (7).

Specific calculations for required wall thickness for the X-207 penetration are not contained in the original design analysis report, DI (5). Due to the small size of the penetration (less than 2 inch nominal) no additional reinforcement was required by the ASME Code. Drawing No. 6202-213 shows the construction details for the penetration. The penetration is a 1 inch diameter schedule 80 pipe attached to the vent pipe head using a full penetration weld and a reinforcing fillet weld. The thinnest section is the wall of the 1 inch diameter pipe stub. Using the sizing requirements from the original design code, the required thickness for pressure and applied loads will be determined. This will be compared against the piping wall thickness with the estimated wall loss from IDR 01-08 as shown on Data Sheet No. 8047-01-32.

From DI (6), the pipe is 1 inch Sch. 80 seamless pipe A333 Gr. 1, with an outside diameter of 1.315 inches, and a nominal thickness of 0.179 inch. The material ultimate strength is 55 Ksi. and the code allowable stress is 13.7 Ksi. The minimum installed thickness of the pipe including the +/- 12.5% manufacturing tolerance is 0.157 inch. The effective throat of the 3/16 fillet weld on the cap is .707(3/16) = 0.133 inch.

From ASME III & VIII, DI (8), the required thickness for the 56 Psi design pressure (conservative considering this is an internal component) is taken from UG-27 of ASME VIII.
With P=56. Psi., R= 1.315 / 2 = .658 inch, & SE =13,700. Psi.:

Circumferential Stress: $t = \frac{PR}{SE - 0.6P}$, $t = \frac{56.(0.658)}{13700. - 0.6(56)} = 0.0027$ inch.

Longitudinal Stress: $t = \frac{PR}{2SE + 0.4P}$, $t = \frac{56.(0.658)}{2(13700.) + 0.4(56)} = 0.0013$ inch.

Given the cantilever configuration and the small size of the stub, there are minimal loads on the stub. Using a 10% increase to account for misc. loads etc., the required wall thickness for the pipe will be taken as 0.003 inch.

The minimum wall thickness including the 0.025 inch estimated wall loss from Data Sheet No. 8047-01-32, is (0.157-.025) = 0.132 inch. This is significantly greater than the 0.003 inch required wall thickness.

Assumptions/Open Items NONE

Material Requirements/Implementation Instructions NONE

Conclusions

IDR 01-07:

The localized shallow pitting found in the bottom interior surfaces of the vent header and vent pipe bowls has been evaluated against the DI (4) acceptance criteria and found acceptable.

The preparer of this T.E. accompanied the IWE examiners on this inspection. The interior condition of the vent header appears essentially the same as observed on a pre-IWE walkdown performed on 9/23/93. During the 1993 refueling outage the vent header was cleaned and a protective coating was applied to the bottom of each bowl and at stiffener plate locations at the downcomers. These coatings are still intact. The extent of light surface corrosion and local pitting appears about the same as was observed in 1993. This indicates that most of the pitting occurred prior to 1993, and that the mechanism is not currently aggressive. Based on this, no augmented inspections would be recommended.

IDR 01-08

The estimated wall loss in each of the X-207 penetrations has been conservatively evaluated

against code requirements and the reamining wall is significantly greater than the code required wall thickness.

The significant margin to code minimum wall thickness and the low expected rate of galvanic corrosion in the inerted containment during operation, would support that no augmented inspections would be recommended at this time.

Recommendations

1. The 2001 refueling outage Data Sheet 8047-01-031 should be used as a baseline for the next scheduled IWE inspection of the vent header interior.

2. The next scheduled IWE visual inspection of the exterior of the vent pipe should include a specific note to check the exterior condition of the X-207 stubs.

Approvals/Closeout *(Print name and provide signature/date.)*

James C. Fitzpatrick _____ / 5/5/01 CE

William J.Duffy _____ / 5/5/01 Independent Reviewer

Scott D. Goowin _____ 5-5-01 Department Manager

(signature) (date)

Closeout *(All actions that were recommended by the TE and accepted by management have been initiated and any identified open items have been dispositioned.)*

_____ / _____ CE

(signature) (date)

Attachments

A. Table 1: Summary of Vent Header IWE Findings (1 Page)

B. VY Inservice Discrepancy Report (IDR) No. 01-07 for Vent Header, dated 5/2/01. -IWE Data Sheet No. 8047-01-031. (10 Pages)

C. VY Inservice Discrepancy Report (IDR) No. 01-08 for X 207 A-H , dated 5/2/01. - IWE Data Sheet No. 8047-01-032. (2 Pages)

TE No. 2001-025

TE Title: EVALUATION OF ASME SECTION XI – IWE FINDINGS FOR IDR 01-07 & IDR 01-08

Keywords: Torus, ASME Section XI, IWE, Vent Pipe, Vent Header

Design Input Documents - The following documents provide design input to this TE.

#	Document Title (including Rev. No. and Date, if applicable)
1	VY Inservice Discrepancy Report (IDR) No. 01-07 for Vent Header, dated 5/2/01. (IWE Data Sheet No. 8047-01-031)
2	VY Inservice Discrepancy Report (IDR) No. 01-08 for X 207 A-H , dated 5/2/01. (IWE Data Sheet No. 8047-01-032)
3	VY Design Engineering Memo: J.C.Fitzpatrick to J.H.Callaghan, subject: Pre-Evaluated Acceptance Criteria for Primary Containment ASME XI IWE Inspections, VYM 99/112, dated December 7, 1999.
4	VY Calculation No. VYC–1032, Rev.1 " Torus Shell & Vent System Thickness Requirements.
5	Certified Stress Report, , Vernon – II, Vermont Yankee Project Containment Vessel, No. 9-6202-II, October 29,1968, by Chicago Bridge & Iron – Oak Brook Engineering.
6	VY Drawing No. 6202-213, Rev 0. CB&I Drawing for Vent Line - Header Intersection.
7	VY Drawing No. 5920-9152, Rev. 0, CB&I drawing for Modifications to Vent Header Drain Line
8	ASME Section III Nuclear Vessels, 1965 (with Winter 1965 Addenda) and ASME Section VIII Unfired Pressure Vessels ,1965.

Design Output Documents - The following documents are impacted by this TE.

#	Document Title
	NONE

General References

#	Reference Title (including Rev. No. and Date, if applicable)
9	ANSI B36.10 –1979 Welded and Seamless Wrought Steel Pipe.

Data Entered into Database_____ / _____ Entry Verified_____ / _____
Signature Date Signature Date

TE #: 2001-025 Required Date: MAY 5, 2001 Reviewer Assigned: W. J. DUFFY

Title: EVALUATION OF ASME SECTION XI – IWE FINDINGS FOR IDR 01-07 & IDR 01-08

Comments:

NONE.

Resolution:

Reviewer Signature, 5/5/01 Date

DCE Signature, 5/5/01 Date

Reviewer Signature, 5/5/01 Date

Notes and Requirements:

1. Validate design input appropriateness relative to your area of expertise.
2. Verify Department Procedures, Program inputs, and output documents are appropriately addressed.
3. Meetings or discussions to resolve questions and comments are encouraged.
4. Resolution by telecon is acceptable and should be noted as such.
5. Make comments specific, and avoid generalizations and questions.
6. If no comments indicate "None"
7. Request Management assistance if resolution can not be achieved.
8. Return all comments to the CE by required date or request an extension.

TABLE 1 Summary of Vent Header IWE Findings

Vent Pipe Bowl @	Findings	D.I. (4) Figure 27 Zone(s)	Vent Header between	Findings
X-5A	Light scattered pitting at bottom of interior surface adjacent to vent header A-B intersection, depth ~ 0.015"	1& 3	X-5A & X-5B	Scattered pitting bottom interior surface adjacent to X-5A vent pipe intersection, max. depth ~ 0.035"
X-5B	General surface corrosion, no significant metal loss.	3	X-5B & X-5C	General surface corrosion, no significant metal loss. Scattered pitting bottom interior surface adjacent to X-5B vent pipe intersection, depth ~ 0.026"
X-5C	General surface corrosion, no significant metal loss with light scattered pitting at bottom of interior surface adjacent to vent header B-C intersection, depth ~ 0.016".	3	X-5C & X-5D	General surface corrosion on bottom interior surface, no significant metal loss. Scattered pitting bottom interior surface adjacent to X-5D vent pipe intersection, max. depth ~ 0.025"
X-5D	General surface corrosion, no significant metal loss with light scattered pitting at bottom of interior surface adjacent to vent header C-D intersection, depth ~ 0.009"	1	X-5D & X-5E	Light general surface corrosion, no significant metal loss. Light pitting bottom interior surface adjacent to vent pipe intersections. At X-5D max. depth ~ 0.009", at X-5E max. depth ~ 0.010".
X-5E	Light general surface corrosion, no significant metal loss.	3	X-5E & X-5F	General surface corrosion, no significant metal loss. Scattered pitting at X-5E vent pipe intersection, max. depth ~ 0.031" over area size 2" by 3". Scattered pitting bottom interior surface adjacent to vent pipe X-5F, depth ~ 0.042".
X-5F	Scattered pitting at bottom of interior surface adjacent to vent header intersections: E-F, depth ~ 0.042", and at F-G, depth ~ 0.025"	3	X-5F & X-5G	General surface corrosion, no significant metal loss. Scattered pitting at X-5G vent pipe intersection, max. depth 0.025".
X-5G	General corrosion and scattered pitting at bottom of interior surface adjacent to vent header intersections: F-G, max depth ~ 0.025" area size 9" x 18", and at G-H, depth ~ 0.010"	1,3	X-5G & X-5H	General surface corrosion, no significant metal loss. Scattered pitting at X-5G vent pipe intersection, max. depth 0.010". Scattered pitting at X-5H vent pipe intersection, max. depth 0.035" approximate area 9" by 9".
X-5H	Scattered pitting at bottom of interior surface adjacent to G-H vent header intersection, max depth ~ 0.025" area size 9" x 14". Significant amount of water in bottom of bowl.	3	X-5H & X-5A	General surface corrosion on bottom interior surface, no significant metal loss.

INSERVICE DISCREPANCY REPORT (IDR)

IDR #: 01-07

Date: 5/2/2001

Component: Vent Header

Location: Drywell

ATTACHMENT B TO TE-2001-025 PG 1 OF 10

Discrepancy: Pitting and general corrosion in excess of Allowable values provided by Design Engineering. All Corrosion areas have lost all coating coverage. Vent Header Bank H contains significant water level. See General Visual Examination Report # 8047-01-031 Attached.

ISI Supervisor: DOK Kilbert Date: 5/2/01

System Operability Affected: YES ___ NO X* BY: DOK Date: 5/2/01

Shift Supervisor Notified: YES ___ NO X BY: DOK Date: 5/2/01

Event Report Initiated: YES ___ NO X BY: DOK Date: 5/2/01

* to be further reviewed by Design Eng

Mechanical Design Engineering Evaluation: _____

Performed By: _____ Date: _____

Disposition/Repair: _____

ISI Program Coordinator: _____ Date: _____

Repair Effort:

Reference Document: _____

Repair Completion Date: _____

Service Induced: YES ___ NO ___ BY: ___ Date: ___

Sample Expansion Required: YES ___ NO ___ BY: ___ Date: ___

Sample Expansion: _____

ISI Program Coordinator: _____ Date: _____

Reinspection Required: YES ___ NO ___ BY: ___

Subsequent Inspection Required: YES ___ NO ___ BY: ___

ISI Supervisor Notified:

ISI Program Coordinator: _____ Date: _____

Reinspection Completed Satisfactorily:

ISI Supervisor: _____ Date: _____

IDR Closed:

ISI Program Coordinator: _____ Date: _____

Data Sheet No: 8047-01-031

Work Order No.: 00-5037

Procedure No/Rev.: 8047 R0

Page 1 of 9 Date: 5/1/01

Vermont Yankee
Visual Examination Report Form for General Visual (IWE)

Component

Component ID: Vent Header System: Drywell

Drawing No/Rev.: 6202-200 Location: Drywell

Visual Aids	Photo	Sketch	Method
☐ Binoculars	☒ None	☐ None 8 pages	☒ Direct General
☐ Mirror	☐ Attached	☒ Attached	☐ Remote
☒ Light Source	Examination Location Description/Remarks	Remote Examination Conditions/Equipment Remarks	
☐ 6" Scale	Interior surface of Vent Header	N/A	
☐ Other			

Examination Results, Details and Comments:

This General Visual examination identified areas of pitting corrosion and general corrosion. The affected areas are identified on the attached drawings, pages 2-9. All areas with pitting ≥ .025" require evaluation by Design Engineering and all areas of pitting in vent header within 6" of the vent header to vent header bowl weld require evaluation by design engineering. Areas of corrosion have lost coating coverage and will require disposition. Acceptance criteria provided per memo to J. H. Callaghan from J.C. Fitzpatrick 12/7/99. Vent header bowl "H" contains significant water and requires disposition by Design Engineering. All vent header to vent header bowl interfaces require evaluation. Pitting identified all have separations of > 3 pit diameters.

See IDR 01-07

Examiner: Ralph Cornell Level Resp. Eng. Date 5/1/01

Examiner: Dennis Dixon Level Resp. Eng Date 5/1/01

Reviewer: D Dixon Date 5/1/01

Reviewer: NA Date NA

ANII: Date

ATTACHMENT B
TO TE 2001-025
PAGE 2 OF 10

VYNEF 8047.06
NE 8047 Original
Page 1 of 1

047-01-031
Page 2 of 9

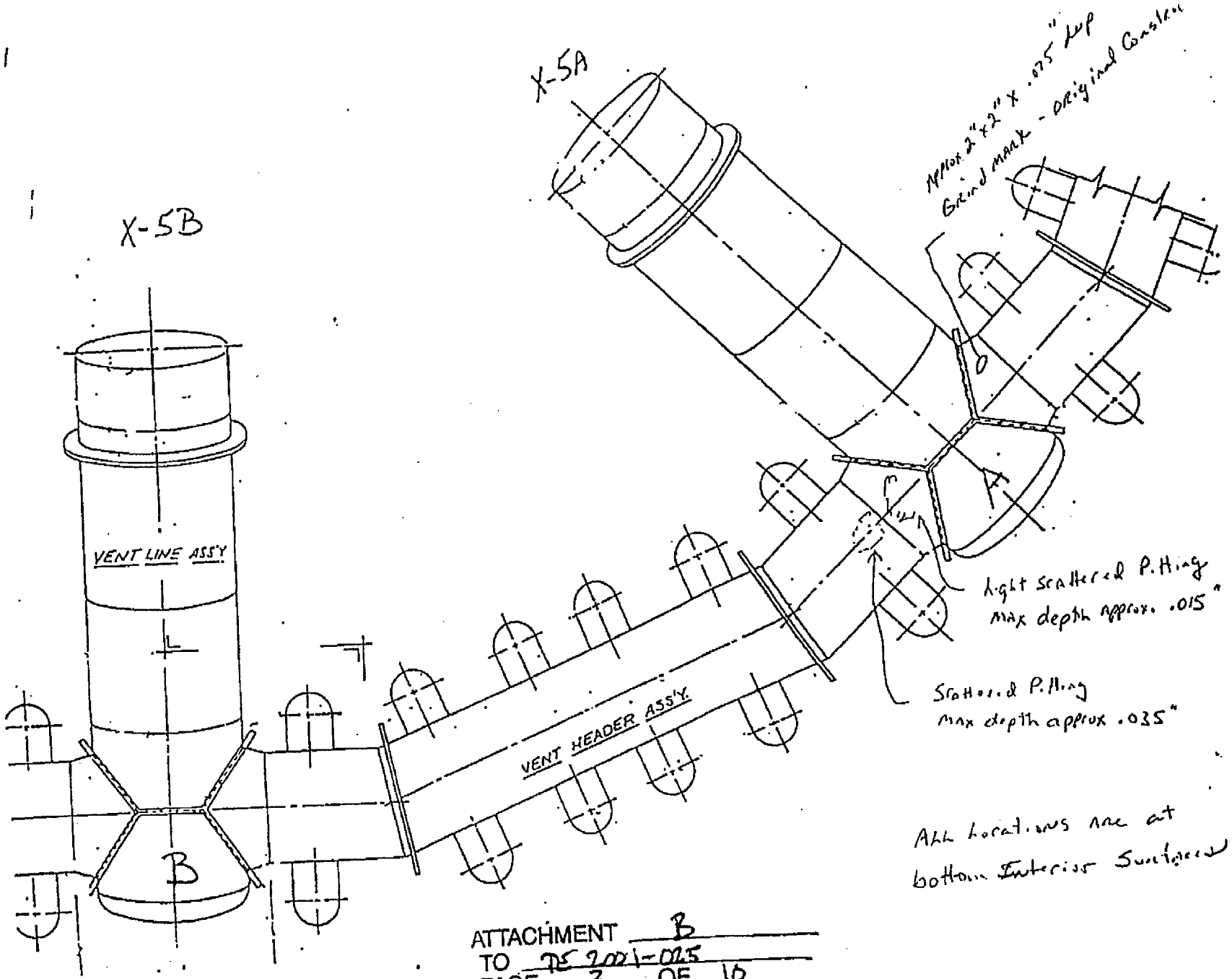

ATTACHMENT B
TO TE 2001-025
PAGE 3 OF 10

047-01-031
page 3 of 9

ATTACHMENT B
TO DS 2001-025
PAGE 4 OF 10

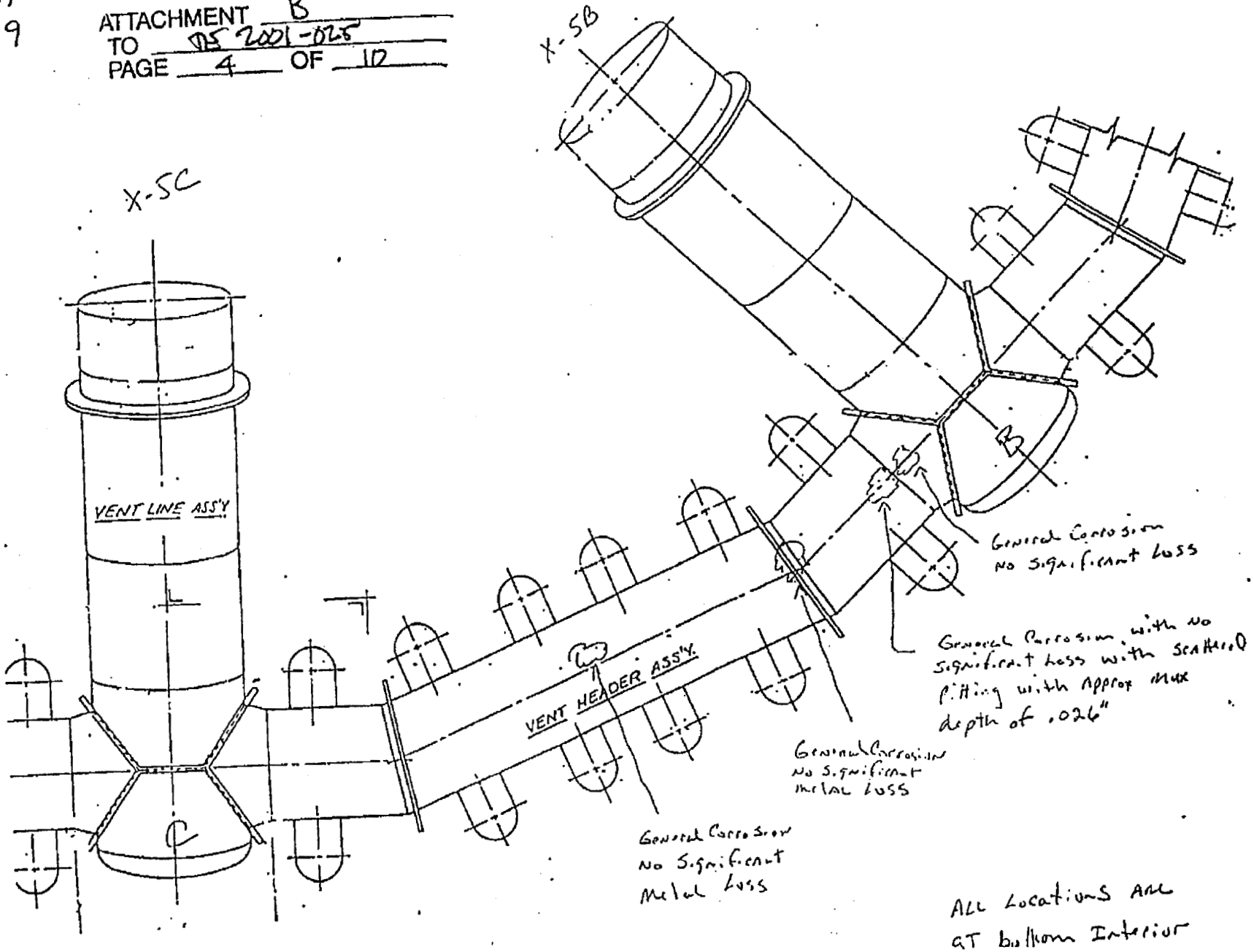

ALL Locations ARE
AT bottom Interior
Surface

8047-01-031
page 4 of 9

ATTACHMENT B
TO DE 2001-025
PAGE 5 OF 10

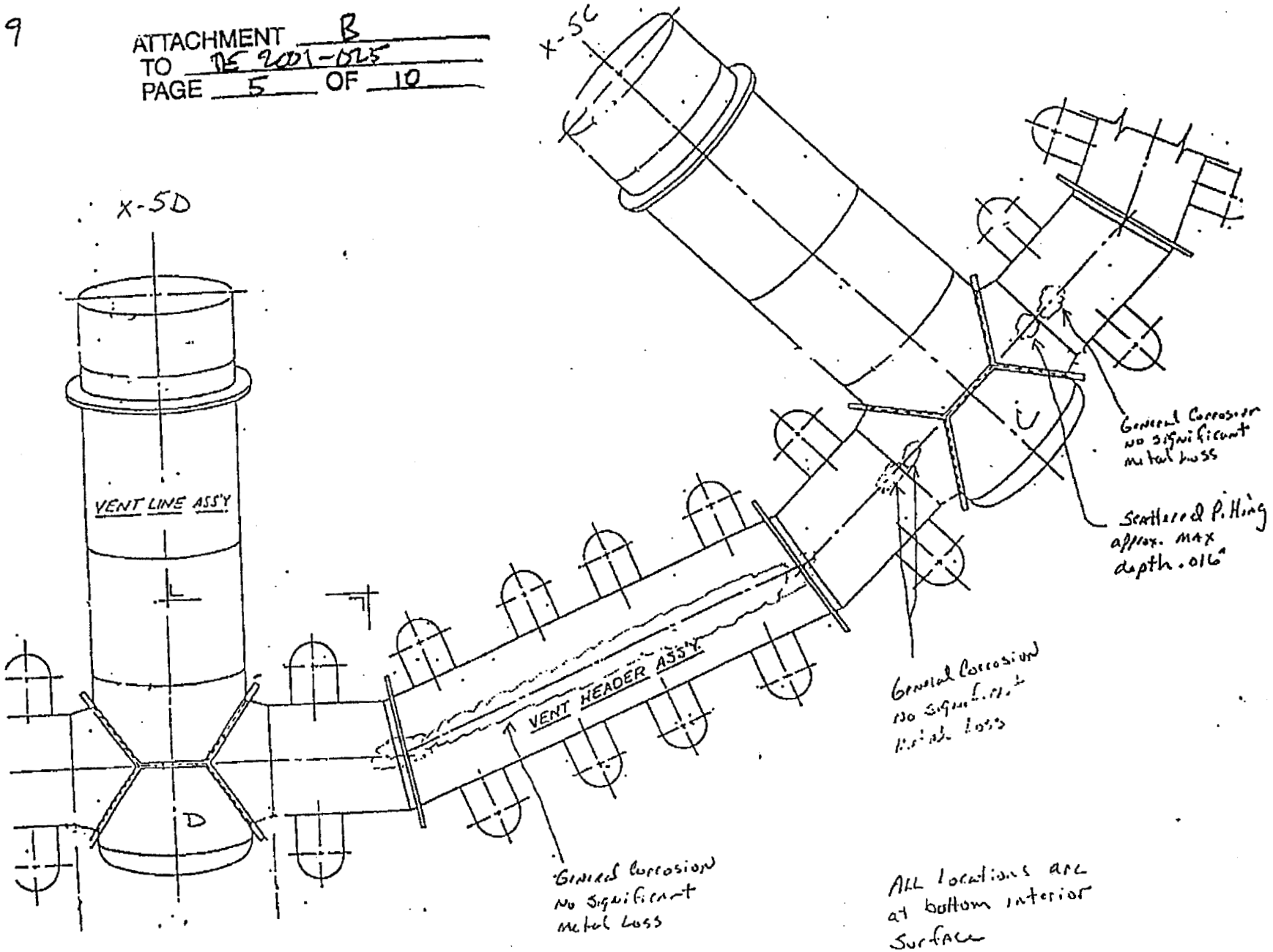

8047-01-031
page 5 of 9

ATTACHMENT B
TO TE-2001-025
PAGE 6 OF 10

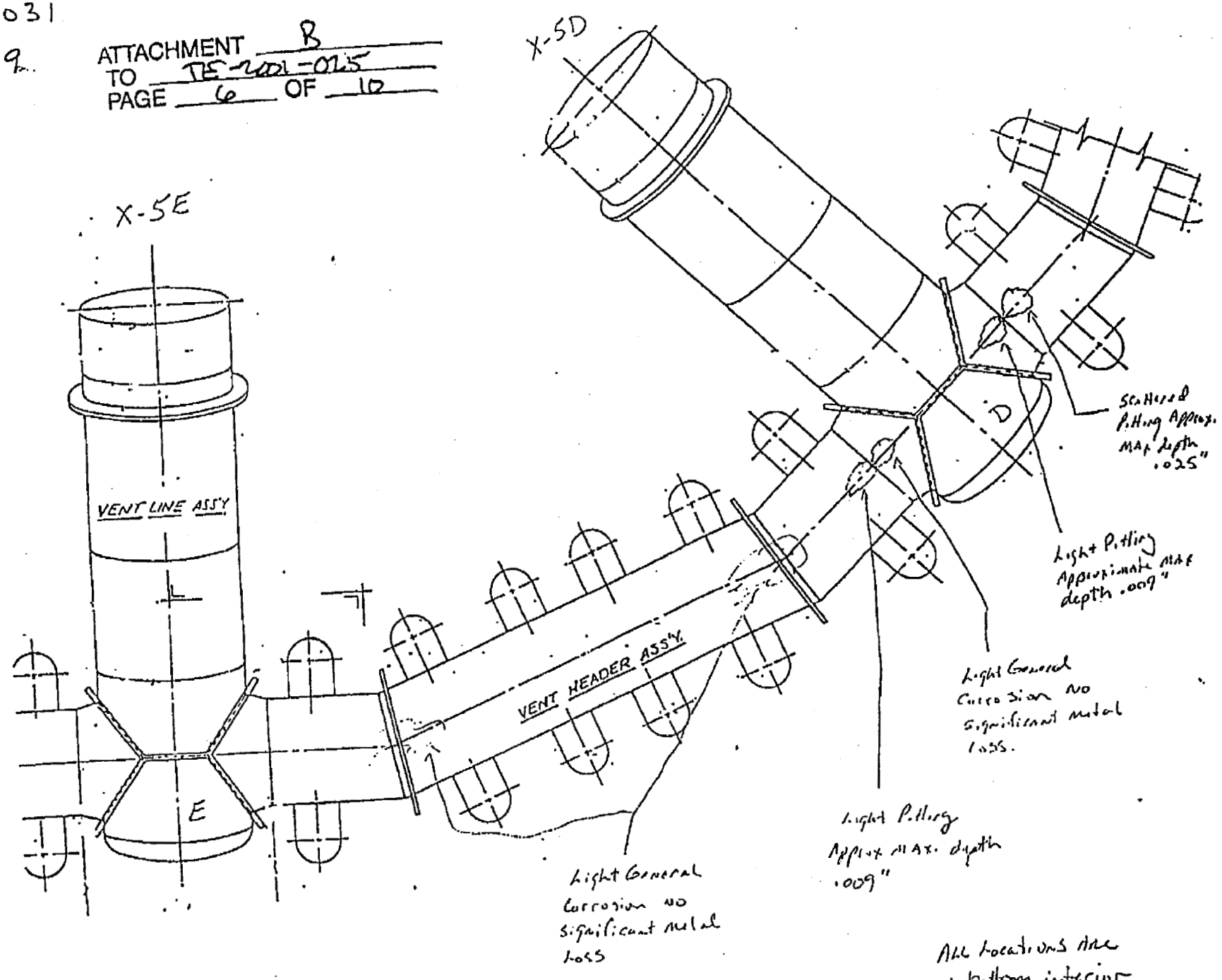

8047-01-031
Page 6 of 9

ATTACHMENT B
TO TE 9001-025
PAGE 7 OF 10

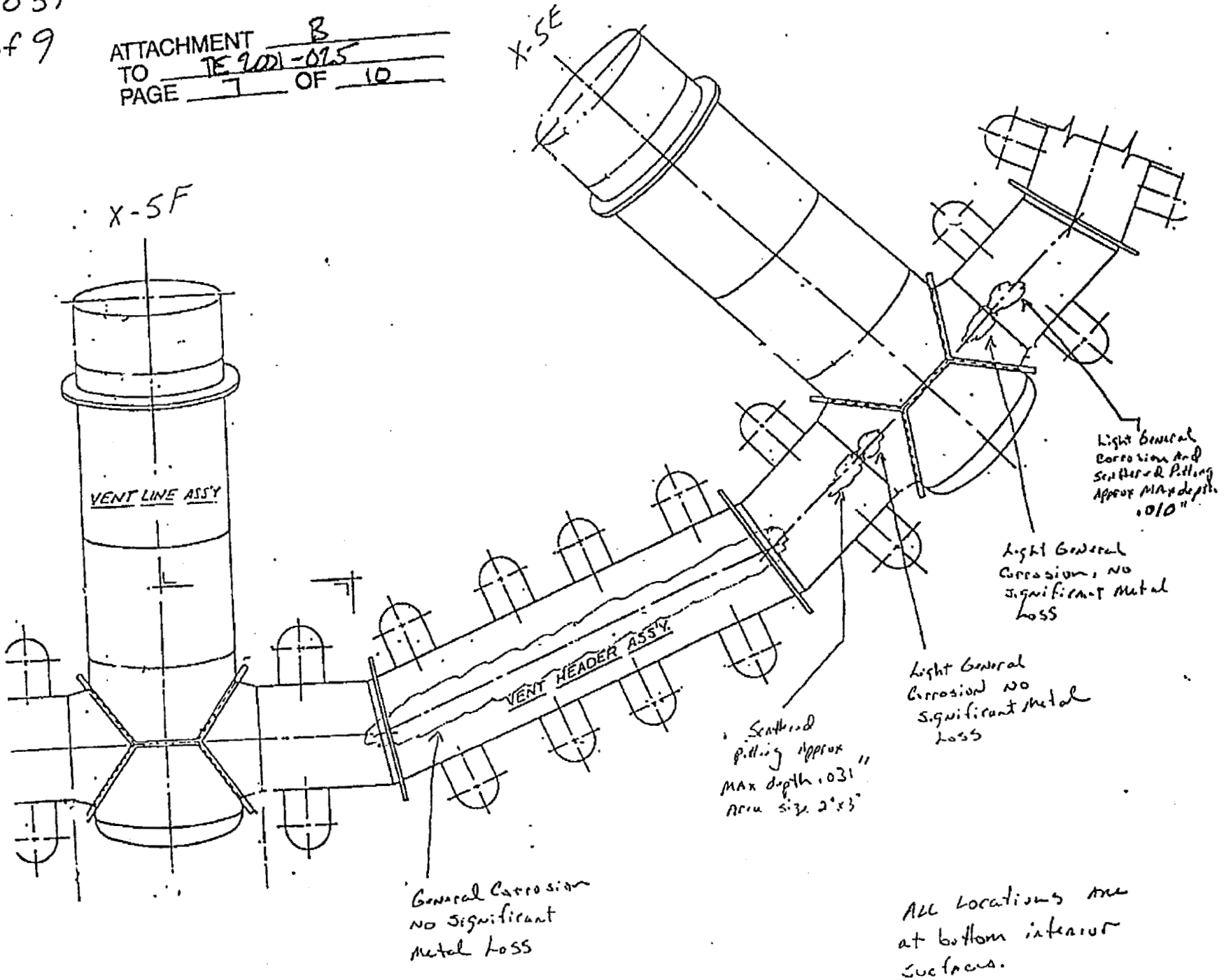

3047-01-031
page 7 of 9

ATTACHMENT B
TO TE-2001-025
PAGE 8 OF 10

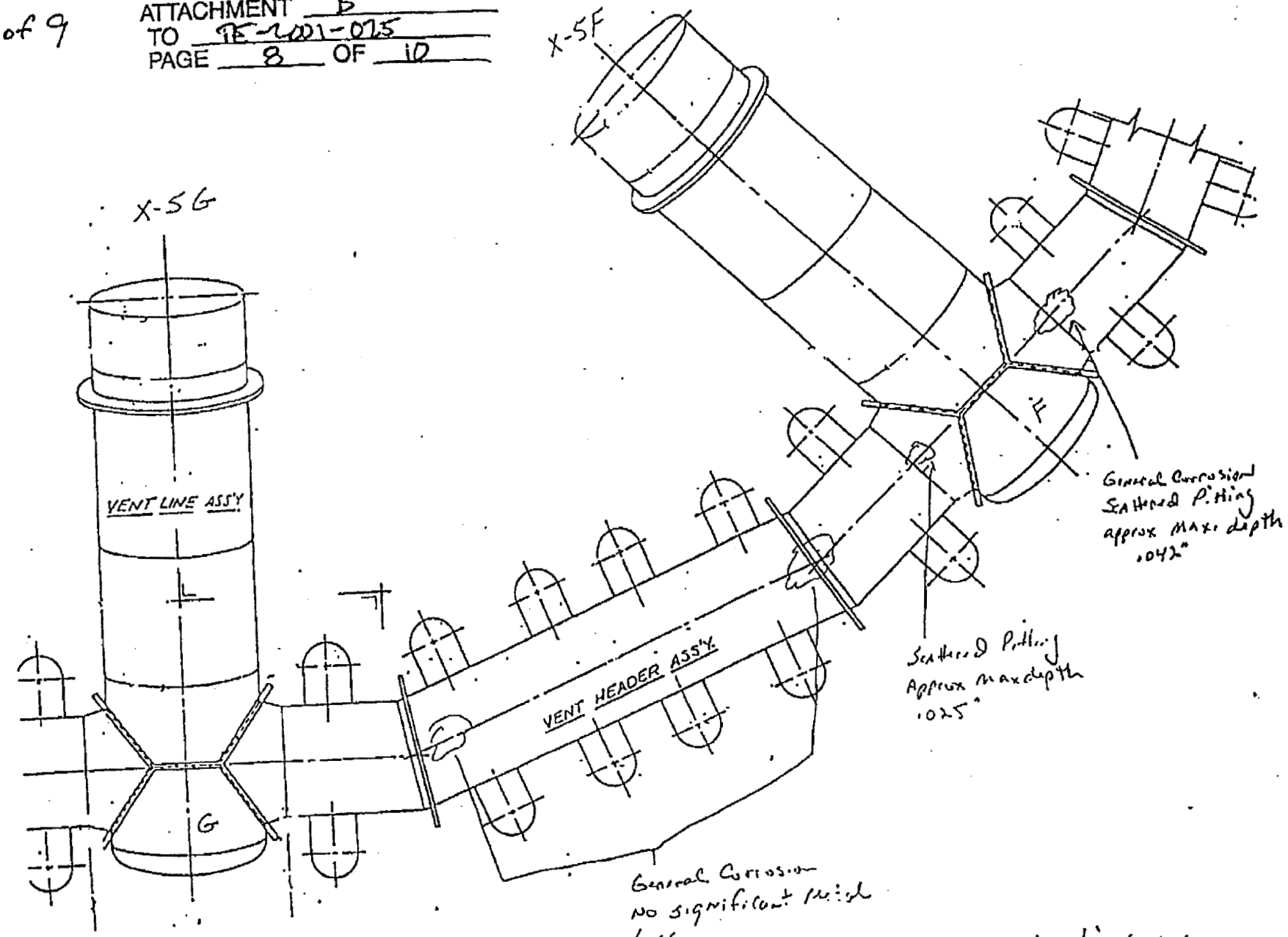

All locations are at bottom interior surface.

8047-01-031
page 8 of 9

ATTACHMENT B
TO TE 2001-025
PAGE 9 OF 10

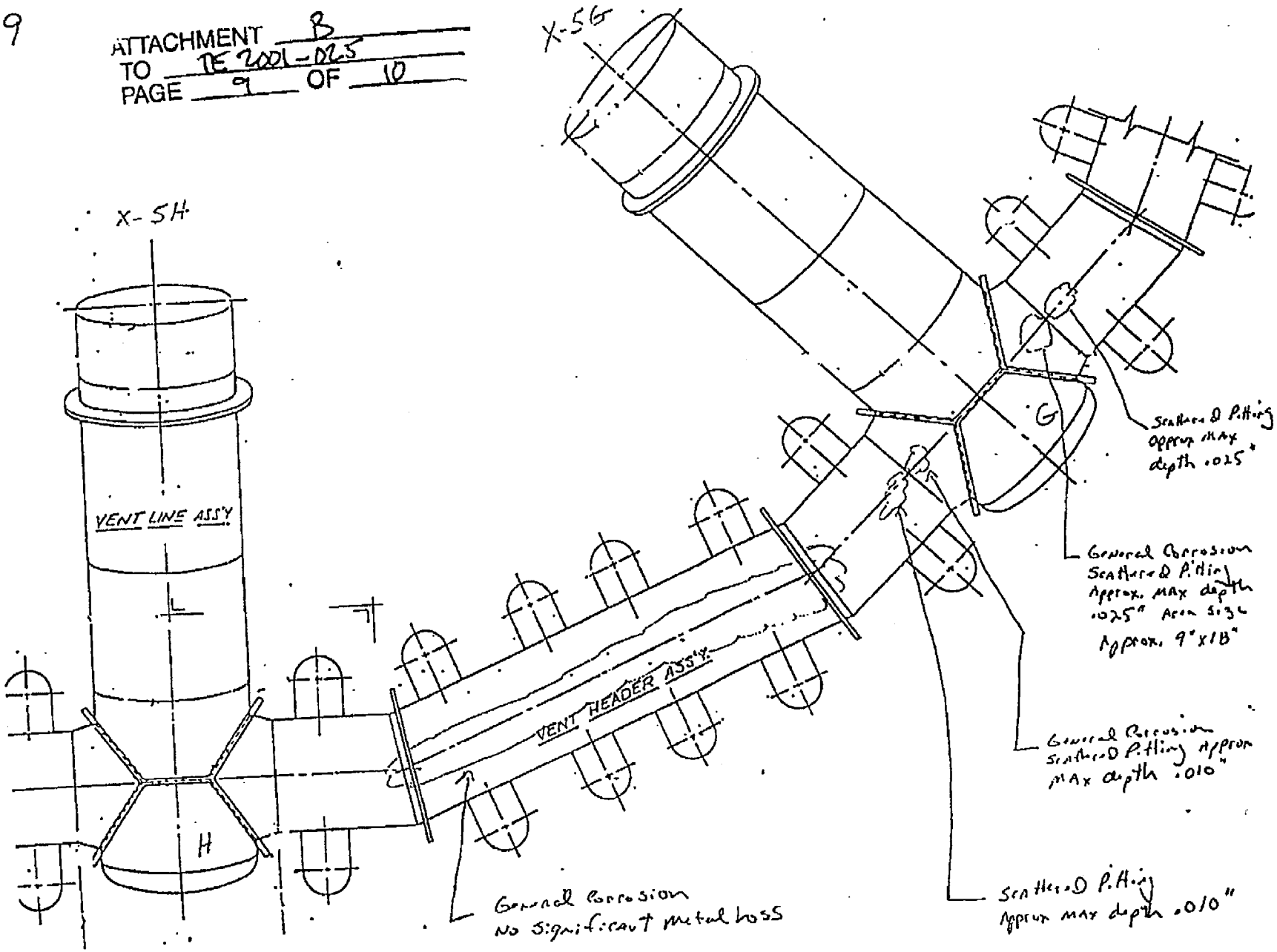

All locations are
on the interior surface

8047-01-031
page 9 of 9

ATTACHMENT B
TO TE-2001-025
PAGE 10 OF 10

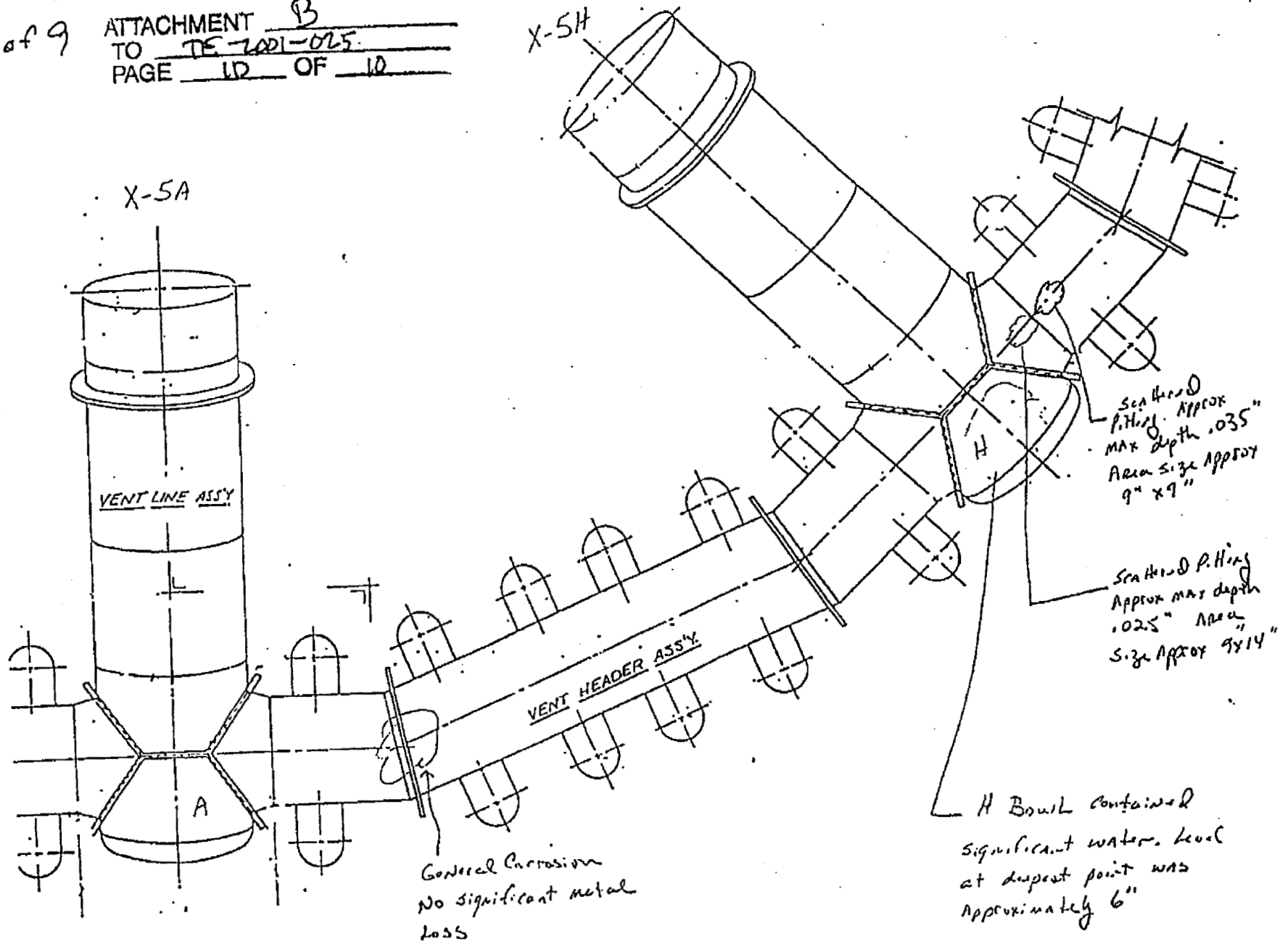

INSERVICE DISCREPANCY REPORT (IDR)

IDR #: 01-08

Date: 5/2/2001

Component: X-207A - H

Location: Drywell

Discrepancy: General corrosion with metal loss ~~increase of~~ DAH 5/4/01 No Allowable values provided by Design Engineering. All corrosion areas have lost all coating coverage. See attached Report (General Visual) # 8047-01-32

ISI Supervisor: D Kenison Date: 5/2/01

System Operability Affected: YES ___ NO X BY: DCO Date: 5/2/01

Shift Supervisor Notified: YES ___ NO X BY: DCO Date: 5/2/01

Event Report Initiated: YES ___ NO X BY: DCO Date: 5/2/01

Mechanical Design Engineering Evaluation: _____

Performed By: _____ Date: _____

Disposition/Repair: _____

ISI Program Coordinator: _____ Date: _____

Repair Effort:

Reference Document: _____

Repair Completion Date: _____

Service Induced: YES ___ NO ___ BY: ___ Date: ___

Sample Expansion Required: YES ___ NO ___ BY: ___ Date: ___

Sample Expansion: _____

ISI Program Coordinator: _____ Date: _____

Reinspection Required: YES ___ NO ___ BY: ___

Subsequent Inspection Required: YES ___ NO ___ BY: ___

ISI Supervisor Notified:

ISI Program Coordinator: _____ Date: _____

Reinspection Completed Satisfactorily:

ISI Supervisor: _____ Date: _____

IDR Closed:

ISI Program Coordinator: _____ Date: _____

ATTACHMENT C
TO TE-2001-025
PAGE 1 OF 2

Data Sheet No: 8047-01-32

Work Order No.: 00-5037

Procedure No/Rev.: 8047 R0

Page 1 of 1 Date: 5/1/01

Vermont Yankee
Visual Examination Report Form for General Visual (IWE)

Component

Component ID: X-207 A, B, C, D, E, F, G, & H System: Torus/Drywell

Drawing No/Rev.: 5920-42 Location: Vent Header

Visual Aids	Photo	Sketch	Method
☐ Binoculars	☒ None	☒ None	☒ Direct General
☐ Mirror	☐ Attached	☐ Attached	☐ Remote
☒ Light Source	Examination Location Description/Remarks	Remote Examination Conditions/Equipment Remarks	
☐ 6" Scale	Internal Exam From Vent Header Interior	N/A	
☐ Other			

Examination Results, Details and Comments:

The internal surface of ALL 8 X-207 penetrations have general corrosion with metal loss. Maximum metal loss estimated .025".

See DDR 01-08

Examiner: Ralph Lowell Level Resp Eng. Date 5/1/01

Examiner: Dennis Lewis Level Rng Eng Date 5/1/01

Reviewer: DCKinion Date 5/1/01

Reviewer: NA Date NA

ANII: Date

ATTACHMENT C
TO TE-2001-025
PAGE 2 OF 2

VYNEF 8047.06
NE 8047 Original
Page 1 of 1

INSERVICE DISCREPANCY REPORT (IDR)

IDR #: 01-08

Date: 5/2/2001

Component: X-207A - H

Location: Drywell

Discrepancy: General corrosion with metal loss ~~[illegible]~~ Allowable values provided by Design Engineering. All corrosion areas have lost all coating coverage. See attached Report (General Visual) # 8047-01-32

ISI Supervisor: [illegible] Date: 5/2/01

System Operability Affected: YES ___ NO X BY: [illegible] Date: 5/2/01

Shift Supervisor Notified: YES ___ NO X BY: [illegible] Date: 5/2/01

Event Report Initiated: YES ___ NO X BY: [illegible] Date: 5/2/01

Mechanical Design Engineering Evaluation:

CONDITION EVALUATED IN TEN 2001-025 (IDR 01-07 & 01-08)

Performed By: [illegible] Date: 5/5/01

Disposition/Repair: ACCEPTABLE AS IS, NO REPAIRS ARE REQUIRED.

ISI Program Coordinator: [illegible] Date: 5/5/01

Repair Effort:

Reference Document: NA

Repair Completion Date: NA

Service Induced: YES X NO ___ BY: [illegible] Date: 5/5/01

Sample Expansion Required: YES ___ NO X BY: [illegible] Date: 5/5/01

Sample Expansion: This is an IWE exam. No expansion required. However, 100% of these areas were examined.

ISI Program Coordinator: [illegible] Date: 5/5/01

Reinspection Required: YES ___ NO X BY: [illegible]

Subsequent Inspection Required: YES ___ NO X BY: [illegible]

ISI Supervisor Notified:

ISI Program Coordinator: [illegible] Date: 5/5/01

Reinspection Completed Satisfactorily:

ISI Supervisor: [illegible] Date: 5/5/01

IDR Closed:

ISI Program Coordinator: [illegible] Date: 5/5/01

Data Sheet No: 8047-01-32

Work Order No.: 00-5037

Procedure No/Rev.: 8047 R 0

Page 1 of 1 Date: 5/1/01

Vermont Yankee
Visual Examination Report Form for General Visual (IWE)

Component

Component ID: X-207 A, B, C, D, E, F, G, & H System: Torus/Drywell

Drawing No/Rev.: 5920-42 Location: Vent Header

Visual Aids	Photo	Sketch	Method
☐ Binoculars	☒ None	☒ None	☒ Direct General
☐ Mirror	☐ Attached	☐ Attached	☐ Remote
☒ Light Source	Examination Location Description/Remarks	Remote Examination Conditions/Equipment Remarks	
☐ 6" Scale	Internal Exam From Vent Header Interior	N/A	
☐ Other			

Examination Results, Details and Comments:

The internal surface of ALL 8 X-207 penetrations have general corrosion with metal loss. Maximum metal loss estimated .025".

See IDR 01-08

Examiner: Ralph Lowell Level Resp Eng. Date 5/1/01

Examiner: Dennis Lewis Level Resp Eng Date 5/1/01

Reviewer: DC Lewis Date 5/1/01

Reviewer: NA Date NA

ANII: [illegible] Date 5-7-01

VERMONT YANKEE TECHNICAL EVALUATION DOCUMENTATION

Technical Evaluation No. 2001-025

Title: **EVALUATION OF ASME SECTION XI – IWE FINDINGS FOR IDR 01-07 & IDR 01-08**

☒ QA (Safety Class, OQA, or Vital Fire) ☐ Non QA (Non-Safety) (Check One)

Background

This T.E. evaluates findings from the IWE inspections of the vent header and vent pipe bowls in the VY primary containment. Specifically addressed are Inservice Discrepancy Reports (IDR) Nos. 01-07 and 01-08, design inputs (DI) 1 & 2.

Visual Inspections are performed on the VY primary containment in accordance with the American Society of Mechanical Engineers (ASME) Code Section XI, Subsection IWE. The purpose of the inspections is to identify degradation of coatings and metal wall loss to insure the continued structural integrity of the primary containment. The inspectors use a pre-evaluated acceptance criteria, DI (3), to screen inspection results. The pre-evaluated criteria is based on VY calculation VYC-1032, Rev.1, DI (4), it serves as a threshold for further evaluation of the results by Design Engineering.

IDR 01-07 identifies areas of general pitting and general corrosion in the vent header and the vent pipe bowls. DI (3) requires any indications adjacent to the vent header mitre joints, downcomer intersections, and vent pipe/header intersections be forwarded to Design Engineering for evaluation.

IDR 01-08 identifies corrosion on the internal surfaces of all (8) of the X-207 penetrations. These penetrations were the low point drain in the bottom of each vent pipe bowl. DI's (3) & (4) do not specifically address corrosion in the X-207 penetrations. The findings were forwarded to Design Engineering for evaluation.

Discussion

IDR 01-07

IDR 01-07 identifies areas of general pitting and general corrosion in the vent header and the vent pipe bowls. A summary of the findings from IDR 01-07 is attached to this TE as Table 1. As indicated on page 1 of 9 of Data Sheet No. 8047-01-031, the pitting areas identified have a minimum separation of (3) pit diameters. Areas identified with local pitting in the vent pipe bowls and in the vent header within 4 inches of the vent pipe/header intersections require an evaluation by Design Engineering. This TE will evaluate the findings shown in Table 1 against the acceptance criteria contained in DI (4).

As shown in Table 1, localized pitting was found in the lower portions of all (8) vent pipe bowls. The areas of pitting correspond to zones 1 and 3 as shown in Figure 27 in Attachment A of VYC-1032, Rev. 1, DI (4). Permissible size indications for these zones are given in Figures 28 and 30 from DI (4) for zones 1 and 3 respectively. The limiting zone is zone 1. All pitting in the vent pipe bowls will be evaluated using an enveloping comparison for zone 1. From DI (3), a pit is

defined as a small area of surface corrosion less than 0.5 inch in diameter.

To envelop pitting found in the vent pipe bowls, the allowable depth of a 1 inch diameter surface indication will be compared against the largest measured pit depth from Table 1. Note that the areas of localized pitting shown in Table 1 only define the areas of pitting, not a zone of wall loss. From Figure 28, for a 1 inch diameter indication an allowable depth is greater than 0.10 inch. From Table 1 the maximum pit depth for the vent pipe bowls is 0.042 inches in X-5F. Therefore all observed pitting in the vent pipe bowls is acceptable.

To envelop pitting found in the vent header, the same approach as for the vent pipe bowls will be used. Since the pitting is adjacent to the vent pipe intersection, Figure 30 for zone 3 will be used. From Figure 30; for a 1 inch diameter indication, an allowable depth is greater than 0.12 inch. From Table 1 the maximum pit depth for the vent header is 0.042 inches adjacent to X-5F. Therefore all observed pitting in the vent header is acceptable.

The standing water found in the in the bottom of the bowl at X-5H along with any other standing water accumulated in the other bowls during this refueling outage will be removed prior to drywell closeout per 5/4/01 telecon with B.Tietze, VY Facilities Supervisor.

IDR 01-08

IDR 01-08 identifies corrosion on the internal surfaces of all (8) of the X-207 penetrations, X-207 A to X-207H. DI's (3) & (4) do not specifically address corrosion in the X-207 penetrations. The results were forwarded to Design Engineering for evaluation.

Each of these penetrations was the low point drain in the bottom of each vent pipe bowl. The original design of the X-207 penetration was a 1 inch nominal pipe which extended from the bottom of the vent pipe bowl down to an elevation below the Torus water level. These lines were removed and the pipe stubs were capped during the Torus Mark I Program Modifications under EDCR 80-11. Details are shown on VY drawings No. 6202-213 and 5920-9152, DI's (6) & (7).

Specific calculations for required wall thickness for the X-207 penetration are not contained in the original design analysis report, DI (5). Due to the small size of the penetration (less than 2 inch nominal) no additional reinforcement was required by the ASME Code. Drawing No. 6202-213 shows the construction details for the penetration. The penetration is a 1 inch diameter schedule 80 pipe attached to the vent pipe head using a full penetration weld and a reinforcing fillet weld. The thinnest section is the wall of the 1 inch diameter pipe stub. Using the sizing requirements from the original design code, the required thickness for pressure and applied loads will be determined. This will be compared against the piping wall thickness with the estimated wall loss from IDR 01-08 as shown on Data Sheet No. 8047-01-32.

From DI (6), the pipe is 1 inch Sch. 80 seamless pipe A333 Gr. 1, with an outside diameter of 1.315 inches, and a nominal thickness of 0.179 inch. The material ultimate strength is 55 Ksi. and the code allowable stress is 13.7 Ksi. The minimum installed thickness of the pipe including the +/- 12.5% manufacturing tolerance is 0.157 inch. The effective throat of the 3/16 fillet weld on the cap is .707(3/16) = 0.133 inch.

From ASME III & VIII, DI (8), the required thickness for the 56 Psi design pressure (conservative considering this is an internal component) is taken from UG-27 of ASME VIII.
With P=56. Psi., R= 1.315 / 2 = .658 inch, & SE =13,700. Psi.:

Circumferential Stress: $t = \frac{PR}{SE - 0.6P}$, $t = \frac{56.(0.658)}{13700. - 0.6(56)} = 0.0027$ inch.

Longitudinal Stress: $t = \frac{PR}{2SE + 0.4P}$, $t = \frac{56.(0.658)}{2(13700.) + 0.4(56)} = 0.0013$ inch.

Given the cantilever configuration and the small size of the stub, there are minimal loads on the stub. Using a 10% increase to account for misc. loads etc., the required wall thickness for the pipe will be taken as 0.003 inch.

The minimum wall thickness including the 0.025 inch estimated wall loss from Data Sheet No. 8047-01-32, is (0.157-.025) = 0.132 inch. This is significantly greater than the 0.003 inch required wall thickness.

Assumptions/Open Items NONE

Material Requirements/Implementation Instructions NONE

Conclusions

IDR 01-07:

The localized shallow pitting found in the bottom interior surfaces of the vent header and vent pipe bowls has been evaluated against the DI (4) acceptance criteria and found acceptable.

The preparer of this T.E. accompanied the IWE examiners on this inspection. The interior condition of the vent header appears essentially the same as observed on a pre-IWE walkdown performed on 9/23/93. During the 1993 refueling outage the vent header was cleaned and a protective coating was applied to the bottom of each bowl and at stiffener plate locations at the downcomers. These coatings are still intact. The extent of light surface corrosion and local pitting appears about the same as was observed in 1993. This indicates that most of the pitting occurred prior to 1993, and that the mechanism is not currently aggressive. Based on this, no augmented inspections would be recommended.

IDR 01-08

The estimated wall loss in each of the X-207 penetrations has been conservatively evaluated

against code requirements and the reamining wall is significantly greater than the code required wall thickness.

The significant margin to code minimum wall thickness and the low expected rate of galvanic corrosion in the inerted containment during operation, would support that no augmented inspections would be recommended at this time.

Recommendations

1. The 2001 refueling outage Data Sheet 8047-01-031 should be used as a baseline for the next scheduled IWE inspection of the vent header interior.

2. The next scheduled IWE visual inspection of the exterior of the vent pipe should include a specific note to check the exterior condition of the X-207 stubs.

Approvals/Closeout *(Print name and provide signature/date.)*

James C. Fitzpatrick _____ / 5/5/01 CE

William J.Duffy _____ / 5/5/01 Independent Reviewer

Scott D. Goowin _____ / 5-5-01 Department Manager

(signature) (date)

Closeout *(All actions that were recommended by the TE and accepted by management have been initiated and any identified open items have been dispositioned.)*

_____ / _____ CE

(signature) (date)

Attachments

A. Table 1: Summary of Vent Header IWE Findings (1 Page)

B. VY Inservice Discrepancy Report (IDR) No. 01-07 for Vent Header, dated 5/2/01. -IWE Data Sheet No. 8047-01-031. (10 Pages)

C. VY Inservice Discrepancy Report (IDR) No. 01-08 for X 207 A-H , dated 5/2/01. - IWE Data Sheet No. 8047-01-032. (2 Pages)

TE No. 2001-025

TE Title: EVALUATION OF ASME SECTION XI – IWE FINDINGS FOR IDR 01-07 & IDR 01-08

Keywords: Torus, ASME Section XI, IWE, Vent Pipe, Vent Header

Design Input Documents - The following documents provide design input to this TE.

#	Document Title (including Rev. No. and Date, if applicable)
1	VY Inservice Discrepancy Report (IDR) No. 01-07 for Vent Header, dated 5/2/01. (IWE Data Sheet No. 8047-01-031)
2	VY Inservice Discrepancy Report (IDR) No. 01-08 for X 207 A-H , dated 5/2/01. (IWE Data Sheet No. 8047-01-032)
3	VY Design Engineering Memo: J.C.Fitzpatrick to J.H.Callaghan, subject: Pre-Evaluated Acceptance Criteria for Primary Containment ASME XI IWE Inspections, VYM 99/112, dated December 7, 1999.
4	VY Calculation No. VYC–1032, Rev.1 " Torus Shell & Vent System Thickness Requirements.
5	Certified Stress Report, , Vernon – II, Vermont Yankee Project Containment Vessel, No. 9-6202-II, October 29,1968, by Chicago Bridge & Iron – Oak Brook Engineering.
6	VY Drawing No. 6202-213, Rev 0. CB&I Drawing for Vent Line - Header Intersection.
7	VY Drawing No. 5920-9152, Rev. 0, CB&I drawing for Modifications to Vent Header Drain Line
8	ASME Section III Nuclear Vessels, 1965 (with Winter 1965 Addenda) and ASME Section VIII Unfired Pressure Vessels ,1965.

Design Output Documents - The following documents are impacted by this TE.

#	Document Title
	NONE

General References

#	Reference Title (including Rev. No. and Date, if applicable)
9	ANSI B36.10 –1979 Welded and Seamless Wrought Steel Pipe.

Data Entered into Database_____ / _____ Entry Verified_____ / _____
Signature Date Signature Date

TECHNICAL EVALUATION REVIEW

TE #: 2001-025 Required Date: MAY 5, 2001 Reviewer Assigned: W. J. DUFFY

Title: EVALUATION OF ASME SECTION XI – IWE FINDINGS FOR IDR 01-07 & IDR 01-08

Comments:

NONE.

Reviewer Signature, 5/5/01 Date

Resolution:

DCE Signature, 5/5/01 Date

Reviewer Signature, 5/5/01 Date

Notes and Requirements:

1. Validate design input appropriateness relative to your area of expertise.
2. Verify Department Procedures, Program inputs, and output documents are appropriately addressed.
3. Meetings or discussions to resolve questions and comments are encouraged.
4. Resolution by telecon is acceptable and should be noted as such.
5. Make comments specific, and avoid generalizations and questions.
6. If no comments indicate "None"
7. Request Management assistance if resolution can not be achieved.
8. Return all comments to the CE by required date or request an extension.

TABLE 1 Summary of Vent Header IWE Findings

Vent Pipe Bowl @	Findings	D.I. (4) Figure 27 Zone(s)	Vent Header between	Findings
X-5A	Light scattered pitting at bottom of interior surface adjacent to vent header A-B intersection, depth ~ 0.015"	1& 3	X-5A & X-5B	Scattered pitting bottom interior surface adjacent to X-5A vent pipe intersection, max. depth ~ 0.035"
X-5B	General surface corrosion, no significant metal loss.	3	X-5B & X-5C	General surface corrosion, no significant metal loss. Scattered pitting bottom interior surface adjacent to X-5B vent pipe intersection, depth ~ 0.026"
X-5C	General surface corrosion, no significant metal loss with light scattered pitting at bottom of interior surface adjacent to vent header B-C intersection, depth ~ 0.016".	3	X-5C & X-5D	General surface corrosion on bottom interior surface, no significant metal loss. Scattered pitting bottom interior surface adjacent to X-5D vent pipe intersection, max. depth ~ 0.025"
X-5D	General surface corrosion, no significant metal loss with light scattered pitting at bottom of interior surface adjacent to vent header C-D intersection, depth ~ 0.009"	1	X-5D & X-5E	Light general surface corrosion, no significant metal loss. Light pitting bottom interior surface adjacent to vent pipe intersections. At X-5D max. depth ~ 0.009", at X-5E max. depth ~ 0.010".
X-5E	Light general surface corrosion, no significant metal loss.	3	X-5E & X-5F	General surface corrosion, no significant metal loss. Scattered pitting at X-5E vent pipe intersection, max. depth ~ 0.031" over area size 2" by 3". Scattered pitting bottom interior surface adjacent to vent pipe X-5F, depth ~ 0.042".
X-5F	Scattered pitting at bottom of interior surface adjacent to vent header intersections: E-F, depth ~ 0.042", and at F-G, depth ~ 0.025"	3	X-5F & X-5G	General surface corrosion, no significant metal loss. Scattered pitting at X-5G vent pipe intersection, max. depth 0.025".
X-5G	General corrosion and scattered pitting at bottom of interior surface adjacent to vent header intersections: F-G, max depth ~ 0.025" area size 9" x 18", and at G-H, depth ~ 0.010"	1,3	X-5G & X-5H	General surface corrosion, no significant metal loss. Scattered pitting at X-5G vent pipe intersection, max. depth 0.010". Scattered pitting at X-5H vent pipe intersection, max. depth 0.035" approximate area 9" by 9".
X-5H	Scattered pitting at bottom of interior surface adjacent to G-H vent header intersection, max depth ~ 0.025" area size 9" x 14". Significant amount of water in bottom of bowl.	3	X-5H & X-5A	General surface corrosion on bottom interior surface, no significant metal loss.

INSERVICE DISCREPANCY REPORT (IDR)

IDR #: 01-07

Date: 5/2/2001

Component: Vent Header

Location: Drywell

ATTACHMENT B TO TE-2001-025 PG 1 OF 10

Discrepancy: Pitting and general corrosion in excess of Allowable values provided by Design Engineering. All Corrosion areas have lost all coating Coverage. Vent Header Bank H contains significant water level. See General Visual Examination Report # 8047-01-031 Attached.

ISI Supervisor: [illegible] Date: 5/2/01

System Operability Affected: YES ___ NO X* BY: DCG Date: 5/2/01

Shift Supervisor Notified: YES ___ NO X BY: [illegible] Date: 5/2/01

Event Report Initiated: YES ___ NO X BY: DCG Date: 5/2/01

* to be further reviewed by Design Eng

Mechanical Design Engineering Evaluation: _____

Performed By: _____ Date: _____

Disposition/Repair: _____

ISI Program Coordinator: _____ Date: _____

Repair Effort:

Reference Document: _____

Repair Completion Date: _____

Service Induced: YES ___ NO ___ BY: ___ Date: ___

Sample Expansion Required: YES ___ NO ___ BY: ___ Date: ___

Sample Expansion: _____

ISI Program Coordinator: _____ Date: _____

Reinspection Required: YES ___ NO ___ BY: ___

Subsequent Inspection Required: YES ___ NO ___ BY: ___

ISI Supervisor Notified:

ISI Program Coordinator: _____ Date: _____

Reinspection Completed Satisfactorily:

ISI Supervisor: _____ Date: _____

IDR Closed:

ISI Program Coordinator: _____ Date: _____

Data Sheet No: 8047-01-031

Work Order No.: 00-5037

Procedure No/Rev.: 8047 R0

Page 1 of 9 Date: 5/1/01

Vermont Yankee
Visual Examination Report Form for General Visual (IWE)

Component

Component ID: Vent Header System: Drywell

Drawing No/Rev.: 6202-200 Location: Drywell

Visual Aids	Photo	Sketch	Method
☐ Binoculars	☒ None	☐ None 8 pages	☒ Direct General
☐ Mirror	☐ Attached	☒ Attached	☐ Remote
☒ Light Source	Examination Location Description/Remarks	Remote Examination Conditions/Equipment Remarks	
☐ 6" Scale	Interior surface of Vent Header	N/A	
☐ Other			

Examination Results, Details and Comments:

This General Visual examination identified areas of pitting corrosion and general corrosion. The affected areas are identified on the attached drawings, pages 2-9. All areas with pitting ≥ .025" require evaluation by Design Engineering and all areas of pitting in vent header within 6" of the vent header to vent header bowl weld require evaluation by design Engineering. Areas of corrosion have lost coating coverage and will require disposition. Acceptance Criteria provided per memo to J. H. Callaghan From J.C. Fitzpatrick 12/7/99. Vent header bowl "H" contains significant water and requires disposition by Design Engineering. All vent header to vent header bowl interfaces require evaluation. Pitting identified all have separation of > 3 pit diameters.

See IDR 01-07

Examiner: Ralph Cornell Level Resp. Eng. Date 5/1/01

Examiner: Dennis Dixon Level Resp. Eng Date 5/1/01

Reviewer: D. Dixon Date 5/1/01

Reviewer: NA Date NA

ANII: Date

ATTACHMENT B
TO TE 2000-025
PAGE 2 OF 10

VYNEF 8047.06
NE 8047 Original
Page 1 of 1

3047-01-031
page 2 of 9

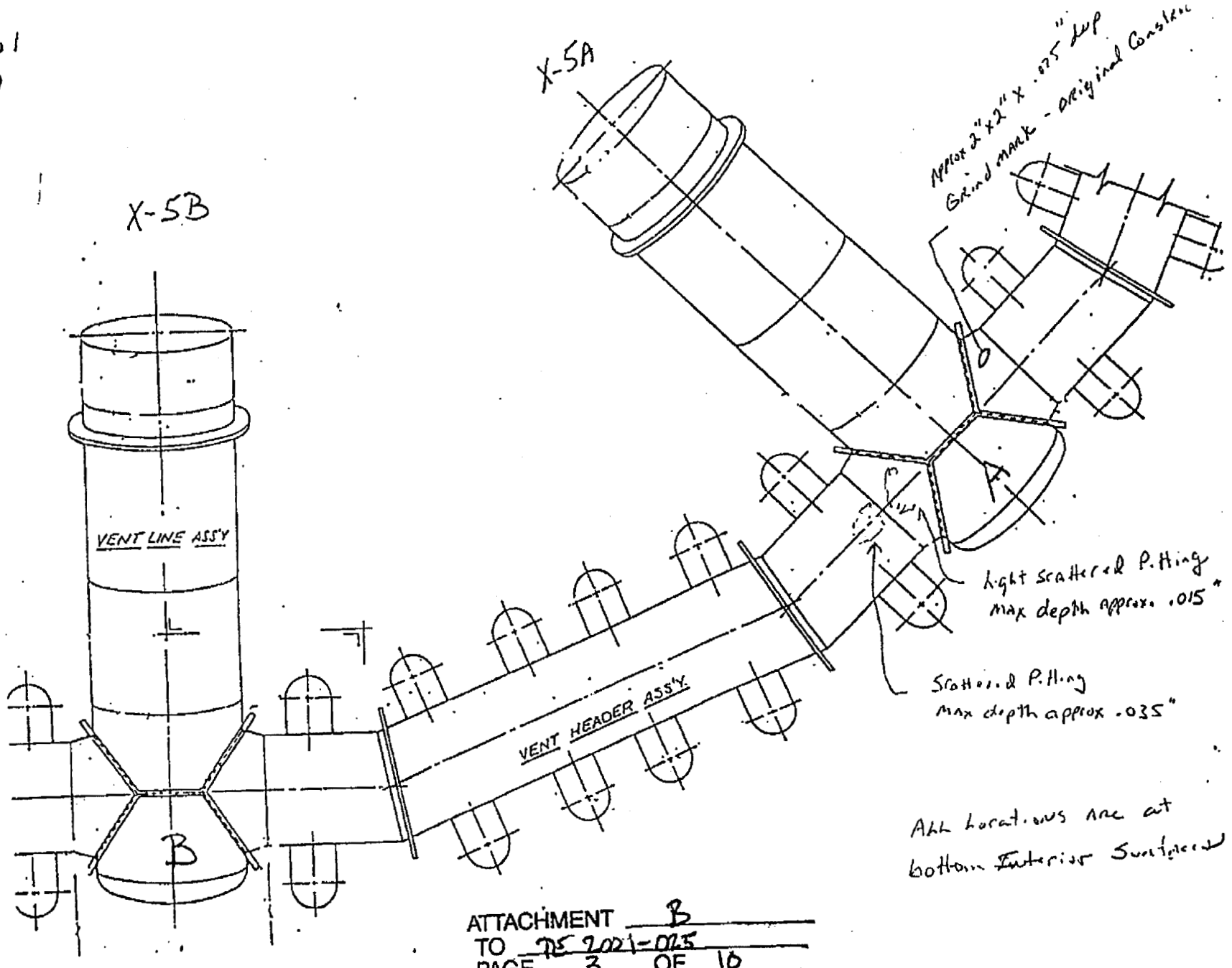

ATTACHMENT B
TO DE 2001-025
PAGE 3 OF 10

3047-01-031
page 3 of 9

ATTACHMENT B
TO DS 2001-025
PAGE 4 OF 10

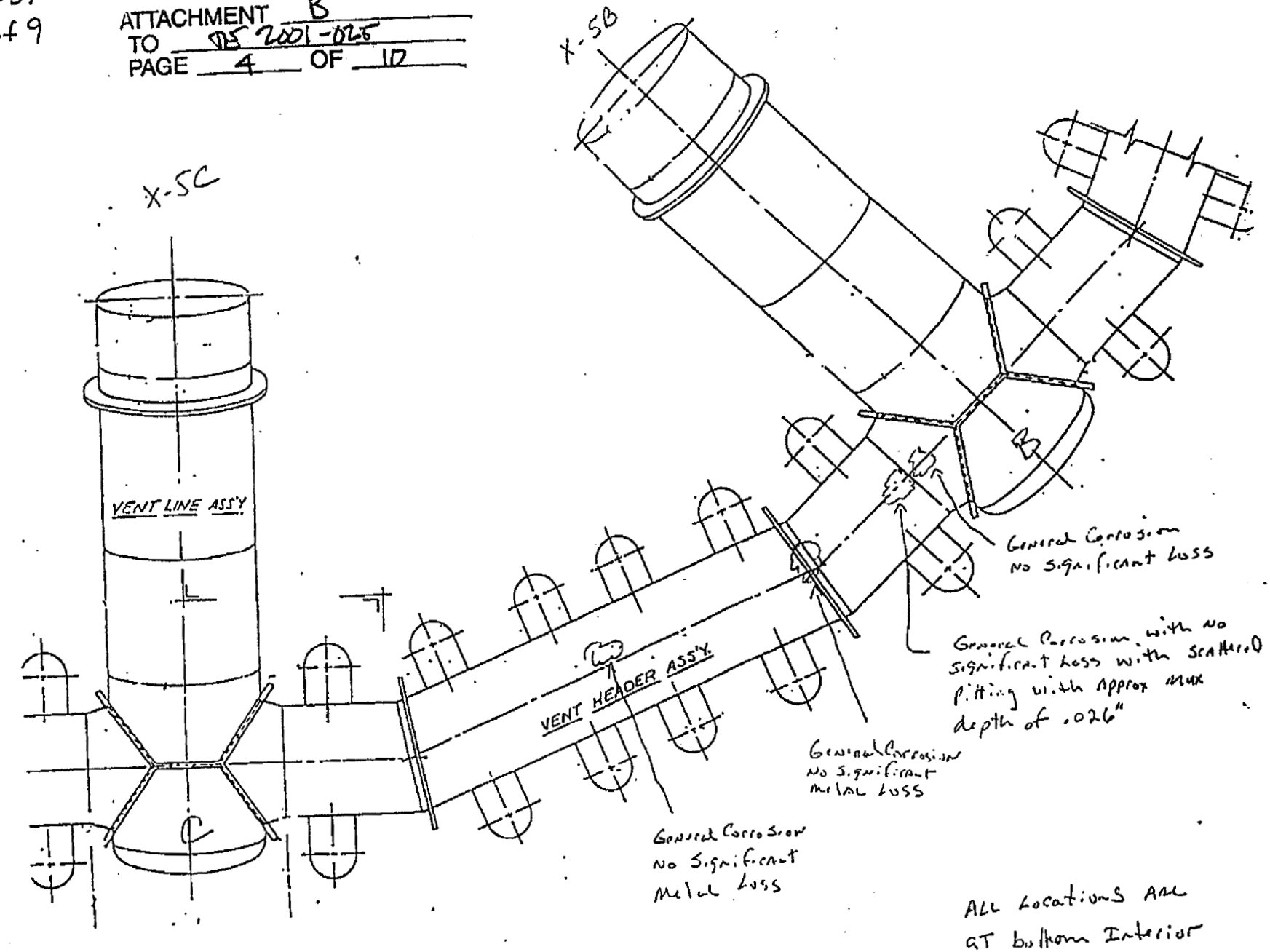

ALL Locations ARE
AT bottom Interior
Surface

8047-01-031
page 4 of 9

ATTACHMENT B
TO TE 2001-025
PAGE 5 OF 10

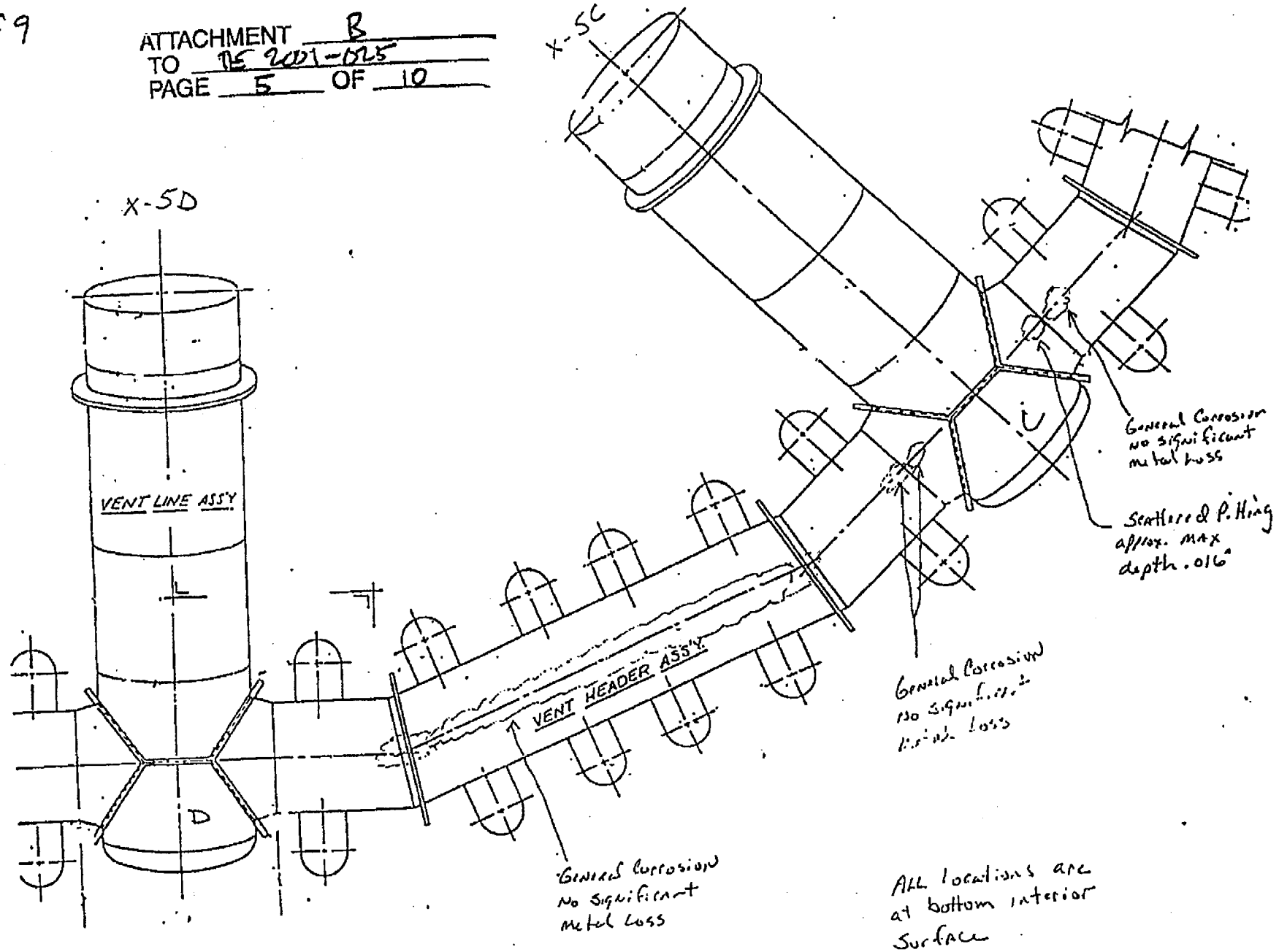

8047-01-031
page 5 of 9

ATTACHMENT B
TO TE-2001-0125
PAGE 6 OF 10

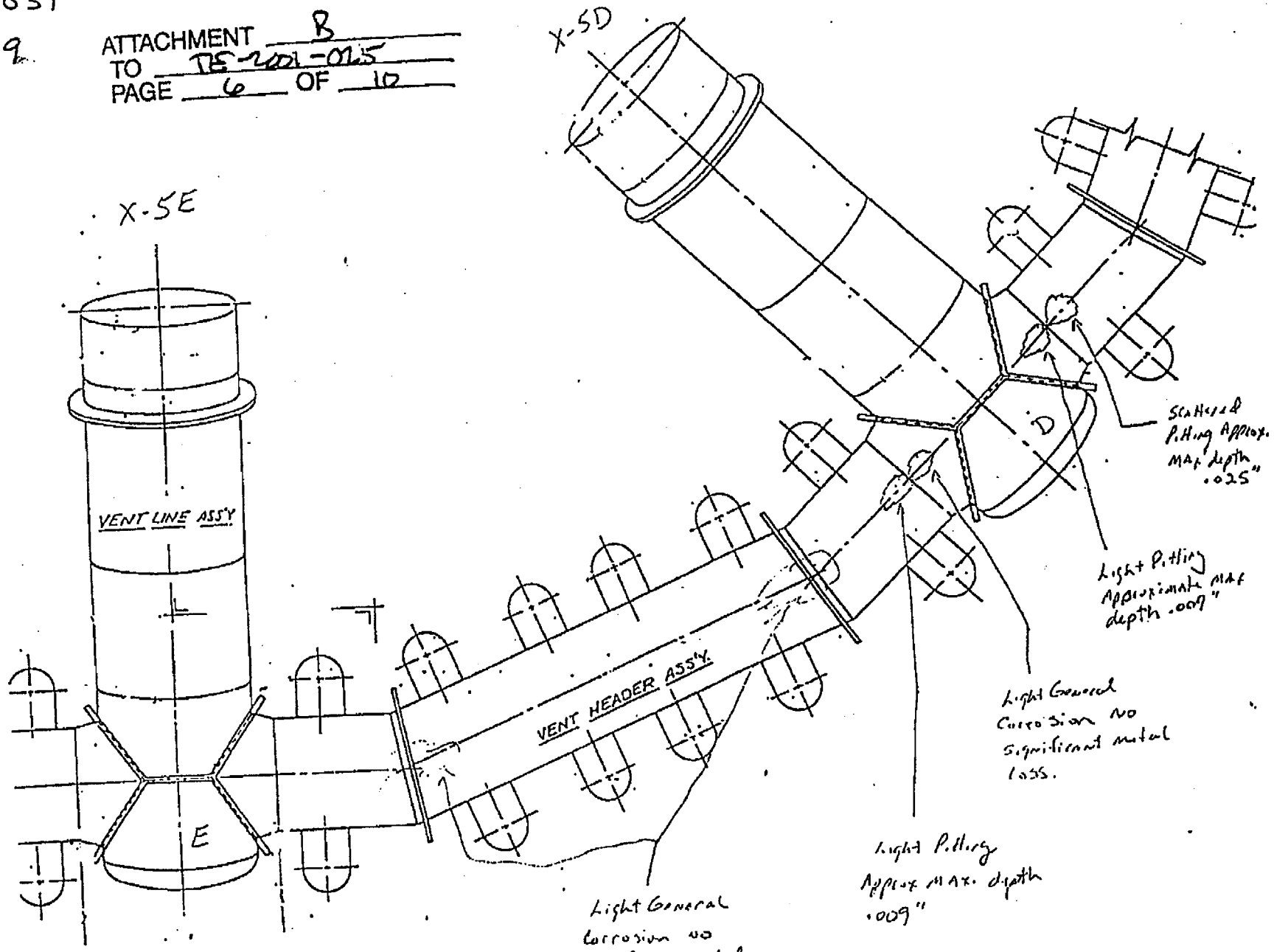

8047-01-031
Page 6 of 9

ATTACHMENT B
TO TE 2001-025
PAGE 7 OF 10

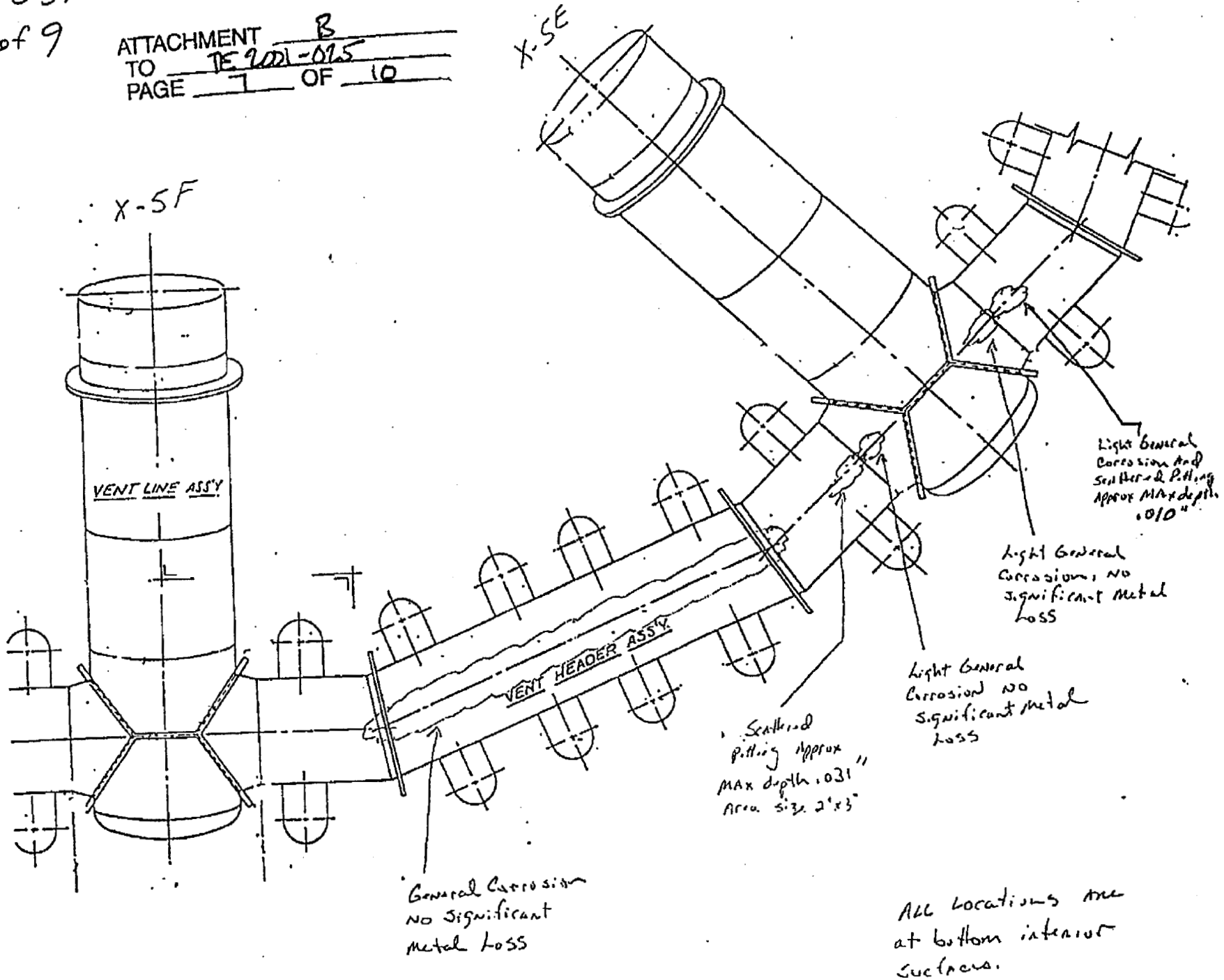

All locations are at bottom interior surfaces.

8047-01-031
page 7 of 9

ATTACHMENT B
TO TE-2001-025
PAGE 8 OF 10

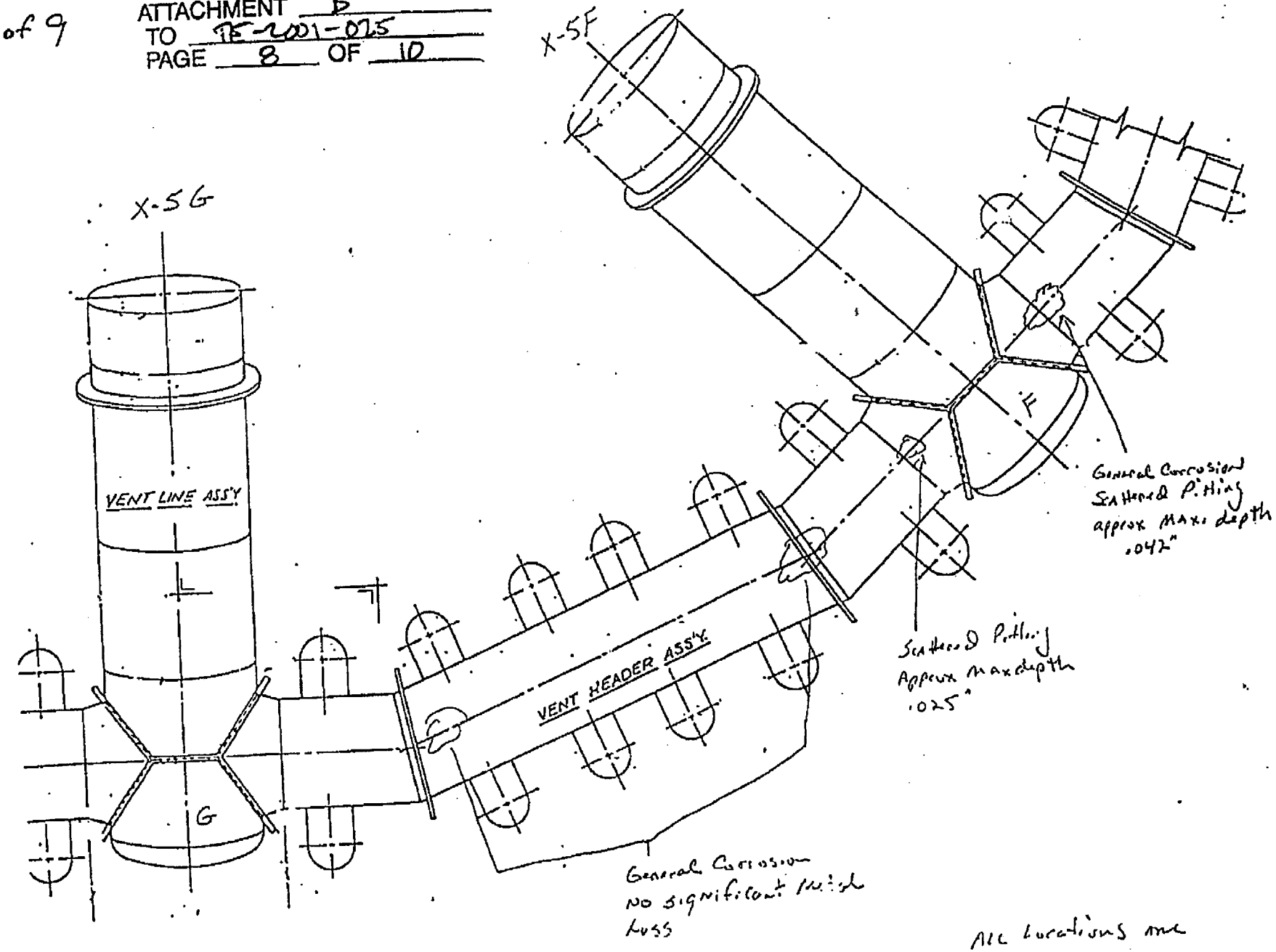

All locations are at bottom interior surfaces.

8047-01-031
page 8 of 9

ATTACHMENT B
TO TE 2001-025
PAGE 9 OF 10

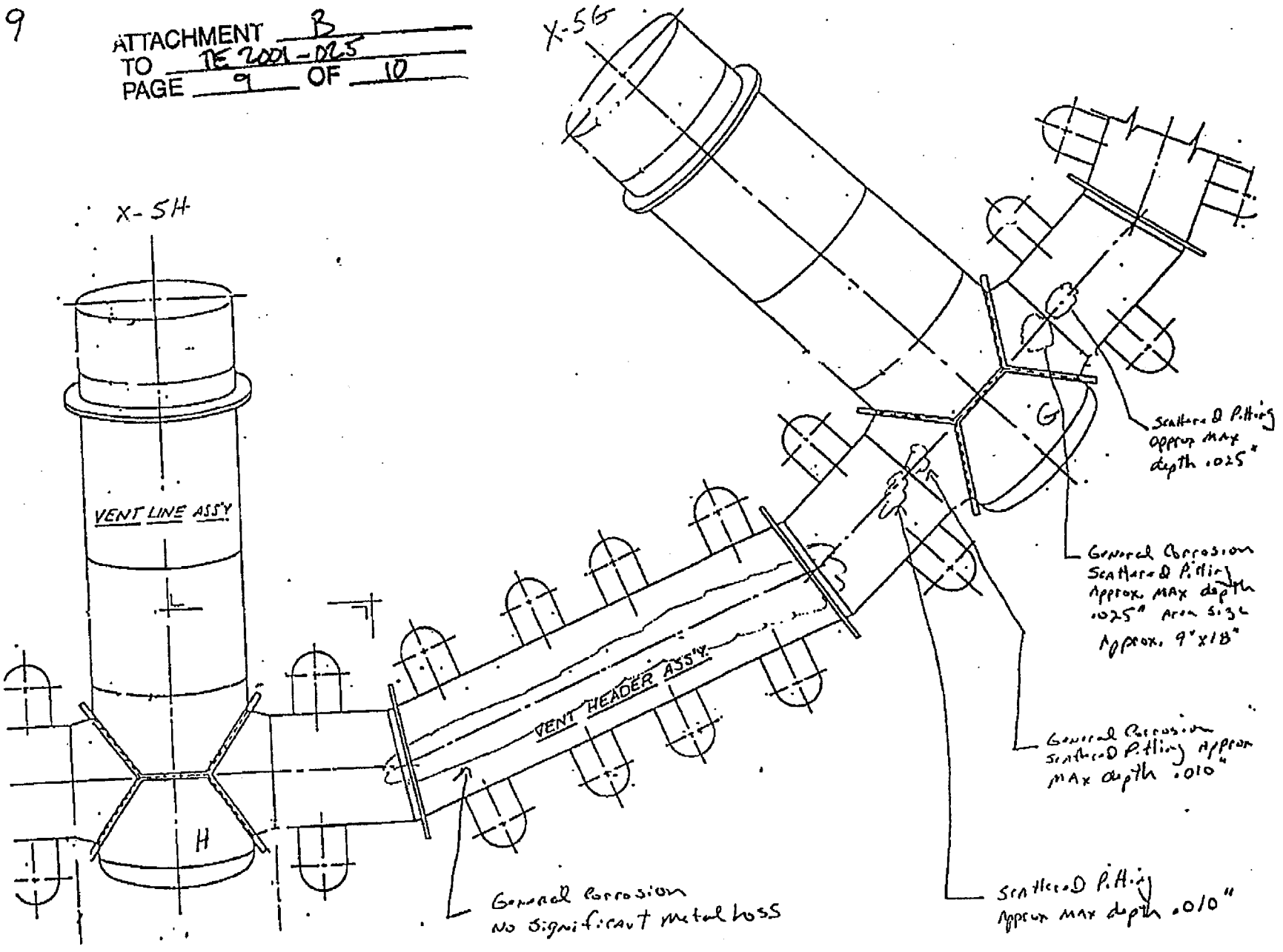

ALL locations are at Bottom interior Surface

8047-01-031
page 9 of 9

ATTACHMENT B
TO TE-2001-025
PAGE 10 OF 10

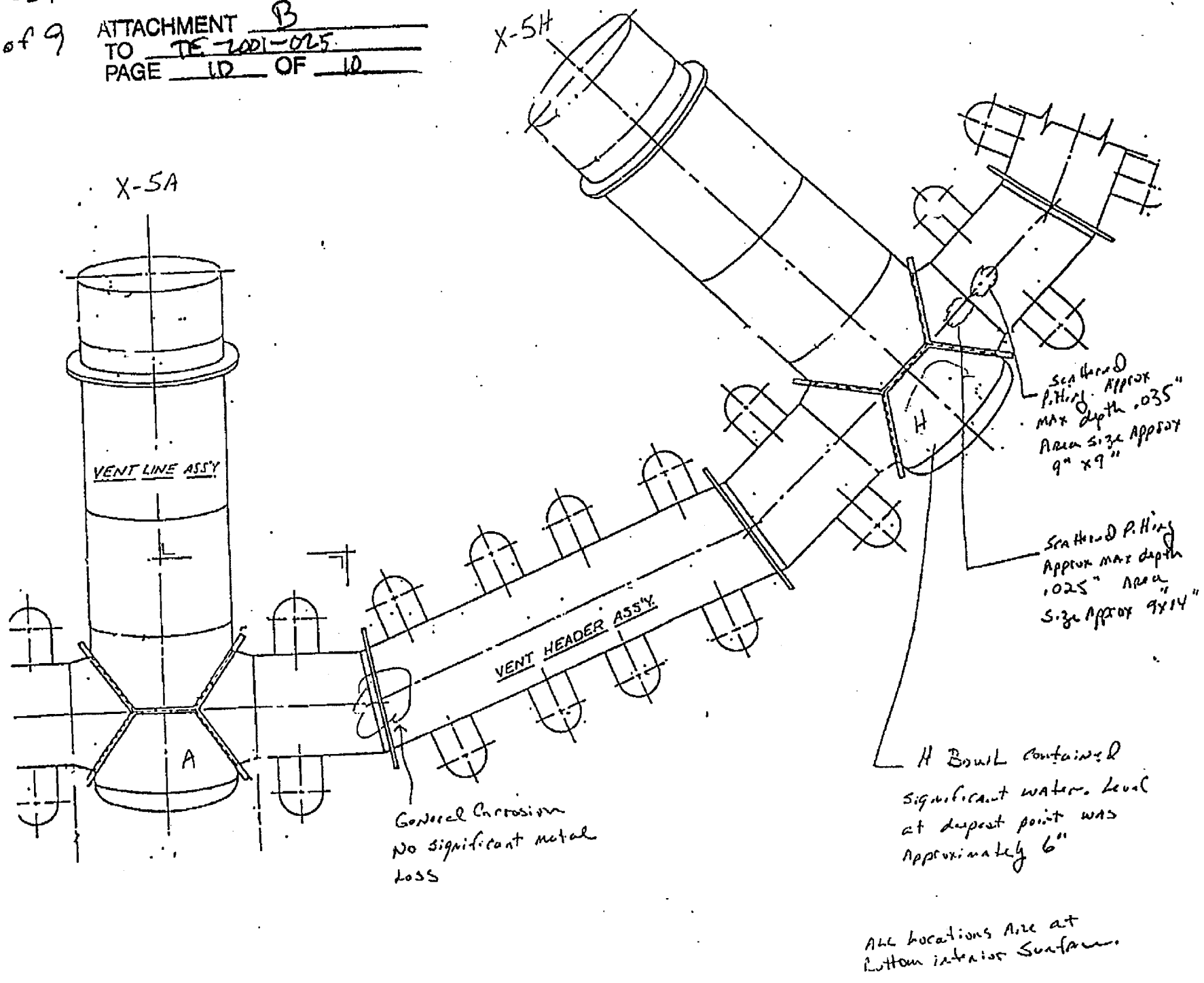

INSERVICE DISCREPANCY REPORT (IDR)

IDR #: 01-08

Date: 5/2/2001

Component: X-207A - H

Location: Drywell

Discrepancy: General corrosion with metal loss ~~increase of~~ Allowable Values provided by Design Engineering. All corrosion areas have lost all coating coverage. See attached Report (General Visual) # 8047-01-32

ISI Supervisor: D Gleason Date: 5/2/01

System Operability Affected: YES ___ NO X BY: DCO Date: 5/2/01

Shift Supervisor Notified: YES ___ NO X BY: DCO Date: 5/2/01

Event Report Initiated: YES ___ NO X BY: DCO Date: 5/2/01

Mechanical Design Engineering Evaluation: _____

Performed By: _____ Date: _____

Disposition/Repair: _____

ISI Program Coordinator: _____ Date: _____

Repair Effort:

Reference Document: _____

Repair Completion Date: _____

Service Induced: YES ___ NO ___ BY: ___ Date: ___

Sample Expansion Required: YES ___ NO ___ BY: ___ Date: ___

Sample Expansion: _____

ISI Program Coordinator: _____ Date: _____

Reinspection Required: YES ___ NO ___ BY: ___

Subsequent Inspection Required: YES ___ NO ___ BY: ___

ISI Supervisor Notified:

ISI Program Coordinator: _____ Date: _____

Reinspection Completed Satisfactorily:

ISI Supervisor: _____ Date: _____

IDR Closed:

ISI Program Coordinator: _____ Date: _____

ATTACHMENT C
TO TE-2001-025
PAGE 1 OF 1

Data Sheet No: 8047-01-32

Work Order No.: 00-5037

Procedure No/Rev.: 8047 R0

Page 1 of 1 Date: 5/1/01

Vermont Yankee
Visual Examination Report Form for General Visual (IWE)

Component

Component ID: X-207 A, B, C, D, E, F, G, & H System: Torus/Drywell

Drawing No/Rev.: 5920-42 Location: Vent Headers

Visual Aids	Photo	Sketch	Method
☐ Binoculars	☒ None	☒ None	☒ Direct General
☐ Mirror	☐ Attached	☐ Attached	☐ Remote
☒ Light Source	Examination Location Description/Remarks	Remote Examination Conditions/Equipment Remarks	
☐ 6" Scale	Internal Exam From Vent Header Interior	N/A	
☐ Other			

Examination Results, Details and Comments:

The internal surface of ALL 8 X-207 penetrations have general corrosion with metal loss. Maximum metal loss estimated .025".

See TDR 01-08

Examiner: Ralph Powell Level Resp Eng. Date 5/1/01

Examiner: Dennis Lewis Level Rng Eng Date 5/1/01

Reviewer: DCLewis Date 5/1/01

Reviewer: NA Date NA

ANII: Date

ATTACHMENT C
TO TE-2001-025
PAGE 2 OF 2

VYNEF 8047.06
NE 8047 Original
Page 1 of 1

INSERVICE DISCREPANCY REPORT (IDR)

IDR #: 01-09

Date: 05/07/01

Component: P-18-1A Recirc. pump bolting. (01A-N/W-16A-N/W)

Location: Drywell 238'

Discrepancy: During VT-1 examination the following was found: 1. The chrome plate on the threads indicated on Dwg. VYEM 5920-738 & 739 R/1 appears to be missing due to corrosion. 2. Evidence of leakage is indeterminate due to water lying on top of pump casing.

ISI Supervisor: DC Grinoir Date: 5/7/01

System Operability Affected: YES __ NO X BY: [illegible] Date: 5/7/01

Shift Supervisor Notified: YES __ NO X BY: [illegible] Date: 5/7/01

Event Report Initiated: YES __ NO X BY: [illegible] Date: 5/7/01

Mechanical Design Engineering Evaluation: PER TE2001-034 5/15/01

CONDITION EVALUATED AND FOUND ACCEPTABLE

Performed By: [illegible] Date: 5/16/01

Disposition/Repair: ACCEPTABLE AS IS PER TE-2001-034

ISI Program Coordinator: DC Grinoir Date: 5/17/01

Repair Effort:

Reference Document: N/A

Repair Completion Date: N/A SLWD 5-16-01

Service Induced: YES * NO * BY: JFC Date: 5-16-01

Sample Expansion Required: YES __ NO ✓ BY: JFC SLWD Date: 5-16-01

Sample Expansion: SEE TE 2001-034 (ATTACHED)

ISI Program Coordinator: DC Grinoir Date: 5/17/01

Reinspection Required: YES __ NO ✓ BY: SLWD

Subsequent Inspection Required: YES __ NO ✓ BY: SLWD

ISI Supervisor Notified:

ISI Program Coordinator: DC Grinoir Date: 5/17/01

Reinspection Completed Satisfactorily:

ISI Supervisor: N/A Date: N/A

IDR Closed:

ISI Program Coordinator: DC Grinoir Date: 5/17/01

Vermont Yankee Visual Examination Report Form VT-1, Bolting (Non-IWE)	Data Sheet No: 8045-01-016 Work Order No.: 01-001497-000 Procedure No/Rev.: NE 8045 Rev. 1 Page 1 of 1 Date: 5-5-01

Component

Component ID: RX RECIRC Pump (Alpha) System: RECIRC
VYEM 5920-739 Rev. 1, 5920-738 Rev. 3 Cap Screws
Drawing No/Rev.: 5920-802 Rev. 0 Bolting Length: 16" per Dwg. " Bolting Diameter: 2 1/2" "

Visual Aids	Method	Examination	Bolting Components Examined	Evaluation Required?
■ 18% NG Card	■ Direct	■ In Place	■ Bolting ■ Washers	☐ Yes ☐ No
■ Mirror	☐ Remote	☐ Removed	☐ Bushings ☐ Flange Surface	
■ Flashlight	Photo	Sketch	Remote Examination Conditions/Limitations	
■ Other Tape	■ None ☐ Attached	■ None ☐ Attached	THE CONDITIONS BELOW ARE ACCEPTABLE AS IS IN ACCORDANCE WITH TE 2001-034. REF. IDR 01-09 Shep Dunham 5.17.01	

	Acceptable	Recordable	N/A	Remarks/Observations
Loose/Missing	J.E. 5-7-01			Verified 16 cap screws and
Thread Engagement	J.E. 5-7-01			washers in place.
Thread Damage (2)		J.E. 5-7-01		The following items of interest
Galling			J.E. 5-7-01	were noted during inspection.
Coating Degradation (1)		J.E. 5-7-01		(1) Dwg. VYEM-5920-738 Rev. 3
Bent/Twisted	J.E. 5-7-01			states, Flash chrome plate thread
Physical Damage (2)		J.E. 5-7-01		and phosphate coat (Item 2-6 cap
Fractured Parts	J.E. 5-7-01			screw.)
Gouges	J.E. 5-7-01			(1) Coating is missing.
Cracks/Linears	J.E. 5-7-01			(2) Corrosion exists on portion
Corrosion (2)		J.E. 5-7-01		of threads where they screw
Erosion	J.E. 5-7-01			into pump casing.
Wear		J.E. 5-7-01		(3) Water standing in scattered
Evidence of Leakage (3)		J.E. 5-7-01		areas on top of casing. Could be
Other (Explain)			J.E. 5-7-01	from small bore piping above.

Examiner: Ted El-Hajj Level II Date 5-7-01
Examiner: N/A Level N/A Date N/A
Reviewer: Shep Dunham Date 5-7-01
Reviewer: N/A Date N/A
ANII: [signature] Date 5-17-01

Experience Hours Credit: _____

VERMONT YANKEE TECHNICAL EVALUATION DOCUMENTATION

Technical Evaluation No. 2001-034

Title: **EVALUATION OF ISI PROGRAM IDR No. 01-09, P-18-1A REACTOR RECIRC PUMP BOLTING**

☒ QA (Safety Class, OQA, or Vital Fire) ☐ Non QA (Non-Safety) (Check One)

Background

This T.E. evaluates findings from the ASME Section XI inspection of the Reactor Recirculation Pump, P-18-1A, cover to case cap screws as documented on Inservice Discrepancy Report. (IDR) No. 01-09 (Attachment A). The cap screws are 2-1/2" diameter 16" long, (Part No. 2-6) with washers (Part No. 2-5) as shown on VY drawings 5920-738 & 5920-739, design inputs (DI) Nos. 2 & 3.

The ISI visual inspection of the pump cover to case bolting is documented on Data Sheet No. 8045-01-016, dated 5/5/01 which is attached to the IDR. Recordable findings noted on the Data Sheet are:

1. Coating is missing.
2. Corrosion exists on portion of threads where they screw into the pump casing.
3. Water standing in scattered areas on top of casing. (could be from small bore piping above).

Discussion

To assess the degree of corrosion at the bolt locations a walkdown of the bolts on both pumps was performed by Design Engineering M/S (J.Fitzpatrick & K.Beardsley) on 5/9/01. Access to both pumps was facilitated by scaffolding erected for modifications to the attached RBCCW cooling lines.

The areas surrounding the bolt heads and washers on both pumps exhibit a light surface corrosion. The insulation on the attached RBCCW cooling lines was removed for the piping modification, this permitted easy access to the cap screw heads and the surrounding areas. See the photos in attachment B. The general surface corrosion may be the result of condensation from the exterior of the RBCCW lines or from water draining into this area during past replacements of the pump seals. As shown in the photos in Attachment B, corrosion by-products were observed on painted surfaces above the location of the cap screw heads. Other than the general surface corrosion there is no significant amount of additional corrosion evident at the cap screw head and washer interface.

The exposed threads on the cap screw at the pump casing cover/body interface are identified as having the chrome plating degraded and as exhibiting some surface corrosion on the exposed threads. There appears to be minimal metal loss on the exposed threads. From DI 4, the ASME stress report for the pumps, there is margin in the supplied bolt area over the required bolt area. This supplied margin ensures that the cap screws will perform their design function and still meet ASME code requirements for allowable stress. The following quantifies this margin.

2-1/2" diameter cap screws , A193 Gr. B7 2-1/2"-8N-2A, (DI 4)
From Table 8.2.10 in Marks Handbook (reference 5). Minor diameter = 2.343 inch

$$16\text{ bolts: Areas supplied} = 16\text{bolt} \times \frac{\pi D^2}{4} = 16 \times \frac{\pi(2.343)^2}{4} = 68.98\text{inches}^2$$

From page 7 of the design stress report for the pump (DI 4), the total bolt area required, $A_{m1} = 62.31$ inches^2.

The bolt root diameter required to supply the total bolt area required, considering all bolts degraded is:

$$\text{MinDiameter} = \sqrt{\frac{4 \times \text{Areq}}{\pi 16\text{bolts}}} = \sqrt{\frac{4 \times 62.31}{\pi 16\text{bolts}}} = 2.27\text{inch.}$$

The allowable corroded thickness (lost metal) on each bolt is ½(2.343-2.27) = 0.0365", (approx. 1/32").

Given that no significant metal loss was noted on the threads and the inert atmosphere in the containment during operation, corrosion is not expected to occur at a significant rate during future operation.

Assumptions/Open Items NONE

Material Requirements/Implementation Instructions NONE

Conclusions

The pumps casing cover/body bolting will perform its design function with the as-noted surface conditions. Margin exists in the 2/12" diameter cap screws for future corrosion. No additional and/or augmented inspections other than planned ISI are required.

Recommendations NONE

Approvals/Closeout (Print name and provide signature/date.)

James C. Fitzpatrick _____ / 5/15/01 CE

Keith Beardsley _____ / 5/15/01 Independent Reviewer

Scott D. Goodwin _____ / 5-15-01 Department Manager

(signature) (date)

Closeout (All actions that were recommended by the TE and accepted by management have been initiated and any identified open items have been dispositioned.)

NONE REQUIRED

_____ / 5/15/01 CE

(signature) (date)

Attachments

A. IDR No. 01-09, for P-18-1A, Recirc. Pump Bolting. (01A-N/W-16A-N/W), dated 5/7/01 (2 pages total)

B. Photographs of Recirc. Pump Casing Cover/Body Cap Screws (2 pages total)

TE No. 2001-034

TE Title: Evaluation of ISI Program IDR No. 01-09, P-18-1A Reactor Recirc. Pump Bolting

Keywords: Pump, Bolting, ASME Section XI, In-service Inspection, P-18-1A

Design Input Documents - The following documents provide design input to this TE.

#	Document Title (including Rev. No. and Date, if applicable)
1	VY Inservice Discrepancy Report (IDR) No. 01-09 for P-18-1A Reactor Recirc. Pump Bolting, dated 5/7/01. (ISI VT-1 Data Sheet No. 8045-01-016)WE Data Sheet No. 8047-01-031)
2	VY Drawing No. 5920-738, Revision 3. Primary Recirc. Pump – List of Materials
3	VY Drawing No. 5920-739, Revision 1. Primary Recirc. Loop Pump – Cross Section
4	VY Drawing No. 5920-802, Revision 0. Byron Jackson Stress Analysis for 28 x 28 26 DVSS Recirculation Pump for GE A.P.E.D. Vermont Yankee, March 1,1968 (B.J. orders 671-S-1108 thru 9)

Design Output Documents - The following documents are impacted by this TE.

#	Document Title
	NONE

General References

#	Reference Title (including Rev. No. and Date, if applicable)
5	Marks Standard Handbook for Mechanical Engineers Ninth Edition, © 1978, McGraw-Hill Inc.

Data Entered into Database _____ / _____ *Entry Verified* _____ / _____
Signature *Date* *Signature* *Date*

TE #: 2001-034 Required Date: Reviewer Assigned:

Title: EVALUATION OF ISI PROGRAM IDR No. 01-09, P-18-1A REACTOR RECIRC PUMP BOLTING

Comments:

MINOR EDITORIAL COMMENTS.

Reviewer Signature 5/15/01 Date

Resolution:

COMMENTS INCORPORATED

DCE Signature 5/15/01 Date

Reviewer Signature 5/15/01 Date

Notes and Requirements:

1. Validate design input appropriateness relative to your area of expertise.
2. Verify Department Procedures, Program inputs, and output documents are appropriately addressed.
3. Meetings or discussions to resolve questions and comments are encouraged.
4. Resolution by telecon is acceptable and should be noted as such.
5. Make comments specific, and avoid generalizations and questions.
6. If no comments indicate "None"
7. Request Management assistance if resolution can not be achieved.
8. Return all comments to the CE by required date or request an extension.

Data Sheet No: IWE-6V-359

Work Order No.: 00-05035

Procedure No/Rev.: NE 8047/original

Page 1 of 1 Date: 10/16/00

Vermont Yankee
Visual Examination Report Form for General Visual (IWE)

Component

Component ID: Torus Penetration X206 A + D System: Containment

Drawing No/Rev.: 5920-42 R13 Location: Rx Building

Visual Aids	Photo	Sketch	Method
☐ Binoculars	☑ None	☑ None	☑ Direct
☐ Mirror	☐ Attached	☐ Attached	☐ Remote
☑ Light Source	Examination Location Description/Remarks	Remote Examination Conditions/Equipment Remarks	
☐ 6" Scale	Exterior Surface of Penetration X 206 A + D	N/A	
☐ Other			

Examination Results, Details and Comments:

Performed General Visual Examination on X206 A and D with satisfactory Results.

Examiner: [signature] Level Responsible Engineer Date 10/16/00

Examiner: Level Date

Reviewer: Date

Reviewer: [signature] Date 10/16/00

ANII: [signature] Date 10/19/00

Data Sheet No: IWE-GV-365

Work Order No.: 00-005035

Procedure No/Rev.: PP 7024/0

Page 1 of 1 Date: 1/16/01

Vermont Yankee
Visual Examination Report Form for General Visual (IWE)

Component

Component ID: X-31 System: Drywell

Drawing No/Rev.: 5920-41 Location: External Surfaces

Visual Aids	Photo	Sketch	Method
☐ Binoculars	☒ None	☒ None	☒ Direct General
☐ Mirror	☐ Attached	☐ Attached	☐ Remote
☒ Light Source	Examination Location Description/Remarks	Remote Examination Conditions/Equipment Remarks	
☐ 6" Scale	Drywell Penetration X-31	N/A	
☐ Other			

Examination Results, Details and Comments:

The Styrofoam spacer material used between the steel containment and the concrete pour is visible at this penetration. This is part of the original construction design. Examined this penetration with no findings identified. Results are satisfactory. Vacuumed concrete penetration sleeve.

Examiner: Ralph Conwell Level Responsible Engineer Date 1/16/01

Examiner: N/A Level N/A Date N/A

Reviewer: N/A Date N/A

Reviewer: N/A Date N/A

ANII: [signature] Date 1-31-01

Vermont Yankee
Visual Examination Report Form for General Visual (IWE)

Data Sheet No: IWE-GV-360

Work Order No.: 00-005035

Procedure No/Rev.: PP7024/0

Page 1 of 1 Date: 1/16/01

Component

Component ID: X-5A Thru 5H System: Drywell

Drawing No/Rev.: 5920-41 Location: External Surfaces

Visual Aids	Photo	Sketch	Method
☒ Binoculars	☒ None	☒ None	☒ Direct General
☐ Mirror	☐ Attached	☐ Attached	☐ Remote
☒ Light Source	Examination Location Description/Remarks	Remote Examination Conditions/Equipment Remarks	
☐ 6" Scale	Drywell Penetrations 5A, B, C, D, E, F, G + H	N/A	
☐ Other			

Examination Results, Details and Comments:

Due to location and proximity of these penetrations to the Torus they can not be safely accessed by Ladder. Examined these penetrations from existing vantage point from top of Torus. Approximately 67% of each penetration can be Examined. The bottom 25% is unavailable and the LAST 33% of the Top 25% of these penetrations are unavailable for examination. Examined accessible areas of X-5A, B, C, D, E, F, G + H with NO findings identified. Results are satisfactory.

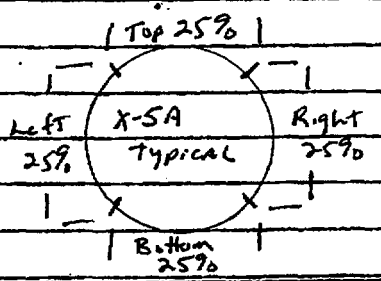

Examiner: Ralph Conwell Level Responsible Engineer Date 1/16/01

Examiner: N/A Level N/A Date N/A

Reviewer: N/A Date N/A

Reviewer: N/A Date N/A

ANII: [signature] Date 1-31-01

Data Sheet No: IWE-GV-367

Work Order No.: 00-00 5035

Procedure No/Rev.: PP7024/0

Page 1 of 1 Date: 1/16/01

Vermont Yankee
Visual Examination Report Form for General Visual (IWE)

Component

Component ID: X-32 System: Drywell

Drawing No/Rev.: 5920-41 Location: External Surfaces

Visual Aids	Photo	Sketch	Method
☐ Binoculars	☒ None	☒ None	☒ Direct General
☐ Mirror	☐ Attached	☐ Attached	☐ Remote
☒ Light Source	Examination Location Description/Remarks	Remote Examination Conditions/Equipment Remarks	
☐ 6" Scale	Drywell Penetration X-32	N/A	
☐ Other			

Examination Results, Details and Comments:

Vacuumed debris from concrete penetration sleeve. Examined this penetration with no findings identified. Results are satisfactory.

Examiner: Ralph Connell Level Responsible Engineer Date 1/16/01

Examiner: N/A Level N/A Date N/A

Reviewer: N/A Date N/A

Reviewer: N/A Date N/A

ANII: [illegible] Date 1-31-01

Data Sheet No: IWE-GV-371

Work Order No.: 00-005035

Procedure No/Rev.: PP 7024/0

Page 1 of 1 Date: 1/16/01

Vermont Yankee
Visual Examination Report Form for General Visual (IWE)

Component

Component ID: X-26 System: Drywell

Drawing No/Rev.: 5920-41 Location: External Surfaces

Visual Aids	Photo	Sketch	Method
☐ Binoculars	☒ None	☒ None	☒ Direct General
☐ Mirror	☐ Attached	☐ Attached	☐ Remote
☒ Light Source	Examination Location Description/Remarks	Remote Examination Conditions/Equipment Remarks	
☐ 6" Scale	Drywell Penetration X-26	N/A	
☐ Other			

Examination Results, Details and Comments:

Removed weld rod holder from lower part of concrete sleeve and vacuumed debris. Examined this penetration with no findings identified. Results are satisfactory.

Examiner: Ralph Connell Level Responsible Engineer Date 1/16/01

Examiner: N/A Level N/A Date N/A

Reviewer: N/A Date N/A

Reviewer: N/A Date N/A

ANII: [illegible] Date 1-31-01

Data Sheet No: IWE-GV-392

Work Order No.: 00-00 5035

Procedure No/Rev.: PP 7024/0

Page 1 of 1 Date: 1/15/01

Vermont Yankee
Visual Examination Report Form for General Visual (IWE)

Component

Component ID: X-52 System: Drywell

Drawing No/Rev.: 5920-41 Location: External Surfaces

Visual Aids	Photo	Sketch	Method
☐ Binoculars	☒ None	☒ None	☒ Direct General
☐ Mirror	☐ Attached	☐ Attached	☐ Remote
☒ Light Source	Examination Location Description/Remarks	Remote Examination Conditions/Equipment Remarks	
☐ 6" Scale	Drywell Penetration X-52	N/A	
☐ Other			

Examination Results, Details and Comments:

Examination of this Penetration results in No findings. Results are Satisfactory.

Examiner: Ralph Connell Level Responsible Engineer Date 1/15/01

Examiner: N/A Level N/A Date N/A

Reviewer: N/A Date N/A

Reviewer: N/A Date N/A

ANII: [signature] Date 1-31-01

E1.11	Drywell Penetration X-51	GV	100%	COMPLETED FROM INTERNAL RFO21 EXTERNAL TO BE SCHEDULED BEFORE OR DURING RFO22 (completed pre RFO 22)
E1.11	Drywell Penetration X-52	GV	100%	COMPLETED FROM INTERNAL RFO21 EXTERNAL TO BE SCHEDULED BEFORE OR DURING RFO22 (completed pre RFO 22)
E1.11	Drywell Penetration X-100A	GV	100%	COMPLETED FROM INTERNAL RFO21 (INACCESSIBLE AREA IDENTIFIED) EXTERNAL TO BE SCHEDULED BEFORE OR DURING RFO22 (completed pre RFO 22)
E1.11	Drywell Penetration X-100B	GV	100%	COMPLETED FROM INTERNAL RFO21 (INACCESSIBLE AREA IDENTIFIED) EXTERNAL TO BE SCHEDULED BEFORE OR DURING RFO22 (completed pre RFO 22)
E1.11	Drywell Penetration X-100C	GV	100%	COMPLETED FROM INTERNAL RFO21 (INACCESSIBLE AREA IDENTIFIED) EXTERNAL TO BE SCHEDULED BEFORE OR DURING RFO22 (completed pre RFO 22)
E1.11	Drywell Penetration X-100D	GV	100%	COMPLETED FROM INTERNAL RFO21 (INACCESSIBLE AREA IDENTIFIED) EXTERNAL TO BE SCHEDULED BEFORE OR DURING RFO22 (completed pre RFO 22)
E1.11	Drywell Penetration X-101A	GV	100%	COMPLETED FROM INTERNAL RFO21 (INACCESSIBLE AREA IDENTIFIED) EXTERNAL TO BE SCHEDULED BEFORE OR DURING RFO22 (completed pre RFO 22)
E1.11	Drywell Penetration X-101B	GV	100%	COMPLETED FROM INTERNAL RFO21 (INACCESSIBLE AREA IDENTIFIED) EXTERNAL TO BE SCHEDULED BEFORE OR DURING RFO22 (completed pre RFO 22)
E1.11	Drywell Penetration X-101C	GV	100%	COMPLETED FROM INTERNAL RFO21 (INACCESSIBLE AREA IDENTIFIED) EXTERNAL TO BE SCHEDULED BEFORE OR DURING RFO22 (completed pre RFO 22)
E1.11	Drywell Penetration X-101D	GV	100%	COMPLETED FROM INTERNAL RFO21 (INACCESSIBLE AREA IDENTIFIED) EXTERNAL TO BE SCHEDULED BEFORE OR DURING RFO22 (completed pre RFO 22)
E1.11	Drywell Penetration X-102	GV	100%	COMPLETED FROM INTERNAL RFO21 (INACCESSIBLE AREA IDENTIFIED) EXTERNAL TO BE SCHEDULED BEFORE OR DURING RFO22 (completed pre RFO 22)
E1.11	Drywell Penetration X-103	GV	100%	COMPLETED FROM INTERNAL RFO21 (INACCESSIBLE AREA IDENTIFIED) EXTERNAL TO BE SCHEDULED BEFORE OR DURING RFO22 (completed pre RFO 22) EXTERNAL SURFACE OF THIS PENETRATION IS NOT ACCESSIBLE FOR EXAMINATION DUE TO DESIGN
E1.11	Drywell Penetration X-104A	GV	100%	COMPLETED FROM INTERNAL RFO21 (INACCESSIBLE AREA IDENTIFIED) EXTERNAL TO BE SCHEDULED BEFORE OR DURING RFO22 (completed pre RFO 22)

To: Dennis Girroir 5/15/2001

From: Ralph Connell

Re: Report for IWE Inspections Performed for RFO22
(Reference "Report for IWE Inspections Performed for RFO21" dated 12/02/1999)

INTRODUCTION:

The objective in the current period for this new IWE inspection program was to gather as much information as we could for RFO21 and RFO22. During RFO21 the goal was to perform as many inspections as possible within the acceptable window without causing any interference with other outage work activities. The remainder of the required first period examinations was performed either before or during RFO22.

After the IWE examinations performed during RFO 21 the Program Procedure PP7024 was revised to incorporate lessons learned. Some revisions were made to the appendices regarding inspected components and inspection criteria. As a result some of the examinations originally listed for the 1st period were revised and are reflected in the completion schedule included in this report. All required VT-3 examinations were moved to the 3rd period as required by the ASME Section XI Code 1992/92A.

DISCUSSION:

The ASME Section XI Subsection IWE Code requires an examination of the coated surfaces in order to determine the condition of the substrate. This examination of coated surfaces is for evidence of flaking, blistering, peeling, discoloration and other signs of distress of the underlying metal. The IWE examinations performed for RFO21 found only two areas of coating with signs of distress affecting the substrate. Those two areas were located at the drywell interior moisture barrier and the other was on the drywell surface at the X-5G penetration. Both of these were evaluated by Mechanical Design Engineering and dispositions provided via the IDR process. IWE examinations during RFO22 identified two more areas. These were areas of pitting and corrosion in the vent header and corrosion in the interior of penetrations X-207A-H. Both of these were also evaluated by Mechanical Design Engineering and dispositions provided via the IDR process. At many areas of the containment there is peeling or discoloration. Both of these issues have been previously identified and accepted via the OP5250 inspections.

The Maintenance Department has been performing containment inspections for several years via OP5250 to evaluate the condition of the coatings on containment surfaces. These inspections have compiled an excellent source of data documenting the conditions of the coatings and how these coatings are maintaining over time. The information provided from these reports provides the basis for disposition of issues identified on the IWE reports such as coating peeling and blistering.

Several areas were identified as inaccessible during the RFO21 and RFO22 IWE examination process. Those inaccessible areas are generally defined in PP7024. More specific information is included with the data supplied in this report.

DETAILS:

TORUS SURFACE

The surface from just below the catwalk on the exterior surface to the horizontal mid point of the torus was inspected prior to RFO22

TORUS PENETRATIONS

The remaining torus penetrations were examined prior to RFO22 and during RFO22. Penetrations X-207A-H were identified as having corrosion exceeding the provided acceptance criteria. IDR 01-08 was written on this item. This was addressed by Design Engineering and a design wall thickness for these penetrations was provided. The X-207A-H penetrations are acceptable for continued use and the corrosion identified does not exceed the required design wall thickness.

Torus penetration (includes penetrations in the vent system) examinations were completed for the first period.

VENT HEADER INTERIOR SURFACE

The interior surface of the vent header examination was completed during RFO22. There were areas of pitting and corrosion identified in the vent header that exceeded the provided acceptance criteria. IDR 01-07 was written to address the areas of pitting and corrosion. Design Engineering addressed this IDR and provided new acceptance criteria for the vent header corrosion identified. All areas are within the required design wall thickness provided by the Design Engineering resolution and are acceptable for continued operation.

AUGMENTED DRYWELL SURFACES

After review of the data gathered during RFO21, a portion of the containment surface at the joint seal area was declared as augmented. This area was examined and documented during RFO22. No change was identified in the as inspected condition between RFO21 and RFO22 in the augmented area.

Since the area of the augmented surface was being prepared for seal installation and painting the opportunity to examine this region with white metal exposed and all corrosion removed presented itself. The entire circumference in the moisture barrier area was examined and the areas of pitting and pit depths were identified. All pitting

identified by this examination were bounded by the 1999 evaluation, VYM 99/139, and are acceptable for continued operation of the drywell.

DRYWELL PENETRATIONS

Forty-three (43) percent of the required first period drywell penetration examinations were completed during RFO21 the remainder was examined either prior to or during RFO22. Many of these penetrations depicted debris and peeling paint. The dirt/debris is not considered to be detrimental to the containment structure. All penetration cavities were dry with no visible indication of moisture. The peeling paint was similar to that identified in the maintenance reports and is not unusual for the age and environmental conditions experienced by the coating.

The dirt/debris identified in the drywell penetration cavities is a housekeeping issue only, not a containment integrity concern. All large debris located in the penetrations examined has been removed. The remaining debris consists of the accumulation of dirt, dust and paint chips over the life of the plant. The quantity of debris in the penetrations identified is not a containment integrity concern. Most dirt/debris was lying in the concrete sleeve and not in contact with the penetration. All penetrations examined (except for X-207A-H) were dry with no indication of water. The penetrations typically have a small access and pose difficulty cleaning. The dilemma from inside the drywell is the accessibility to the penetrations and the ALARA concerns.

CONTAINMENT MOISTURE BARRIER

The drywell moisture barrier at the concrete floor to steel interface on the 238' level was identified as failed during RFO21 examination. During RFO 22 this seal was replaced. To deal with the paint chipping and corrosion in the seal area and to accommodate the seal installation a six-inch wide band of paint was removed in the seal area for the full circumference of the drywell at the 238' level. The seal was reinstalled per minor mod #2000-010. The six-inch band was re-coated with non-qualified coating. The area of the seal and coating was examined after installation to document the as installed condition.

This seal acts as a gasket at the concrete to steel interface to prevent moisture from penetrating under the concrete and to prevent it from setting in the interface setting up localized corrosion. This area is an area that regularly gets flooded with water due to the activities that take place during outages in the dry well. This area also is an area that experiences wear and tear at a much higher rate than the rest of the containment due to its location. As a result of the location and outage activities this is an area that requires regular maintenance to keep the moisture barrier seal and the paint in the moisture barrier area intact and properly protecting the steel containment. The logistics of trying to place qualified coating at this location and then set up to regularly maintain it can be difficult as was seen during RFO22 not to mention very costly. I recommend that this moisture barrier area and the six-inch band of paint be declared a high maintenance area and designed as an area where unqualified coatings are approved and utilized. This will make the routine maintenance of this area much easier to perform resulting in better

maintenance of this area in the future. If this approach were approved, repainting with qualified coating would not be required only maintenance activity to maintain the integrity of the non-qualified paint and moisture barrier seal. This maintenance should become a routine PM.

PRESSURE RETAINING BOLTING

Bolting examinations for X-200A & B and V16-19-5G & H were completed during RFO22 in the removed condition. Bolting examinations for V16-19-5A-F was examined in place. This completes the required first period IWE bolting examinations.

SUMMARY:

An estimated 80% of IWE examinations are completed prior to or during RFO21. The remaining 20% were completed prior to or during RFO22 to complete the first period examination requirements.

There were two new IDR's generated, per DP4027, for containment issues during RFO22. All of these issues were addressed by Mechanical Design Engineering prior to RFO22 startup.

Please find attached to this report for reference the Summary of First Period IWE Examinations. This report provides details for the first period examinations.

11/23/1999 SUMMARY OF FIRST PERIOD IWE EXAMINATIONS

CONTAINMENT SURFACES (TORUS BAYS)				ASME SECTION XI EXAM. CATEGORY: E-A
ASME SECTION XI ITEM N0.	ISI IDENTIFICATION NO./DESCRIPTION	EXAM	% COMPLETE TO DATE	REMARKS
E1.11	TORUS BAY 1	GV	100 %	Internal surface above water line completed RFO 21 External surface except area from catwalk down to belt line completed. Remaining area to be inspected after S/U RFO21(completed pre RFO 22) Note: VT-1 completed below water line RFO20
E1.11	TORUS BAY 2	GV	100 %	Internal surface above water line completed RFO 21 External surface except area from catwalk down to belt line completed. Remaining area to be inspected after S/U RFO21 (completed pre RFO 22) Note: VT-1 completed below water line RFO20
E1.11	TORUS BAY 3	GV	100 %	Internal surface above water line completed RFO 21 External surface except area from catwalk down to belt line completed. Remaining area to be inspected after S/U RFO21(completed pre RFO 22) Note: VT-1 completed below water line RFO20
E1.11	TORUS BAY 4	GV	100 %	Internal surface above water line completed RFO 21 External surface except area from catwalk down to belt line completed. Remaining area to be inspected after S/U RFO21(completed pre RFO 22) Note: VT-1 completed below water line RFO20
E1.11	TORUS BAY 5	GV	100 %	Internal surface above water line completed RFO 21 External surface except area from catwalk down to belt line completed. Remaining area to be inspected after S/U RFO21(completed pre RFO 22) Note: VT-1 completed below water line RFO20
E1.11	TORUS BAY 6	GV	100 %	Internal surface above water line completed RFO 21 External surface except area from catwalk down to belt line completed. Remaining area to be inspected after S/U RFO21(completed pre RFO 22) Note: VT-1 completed below water line RFO20
E1.11	TORUS BAY 7	GV	100 %	Internal surface above water line completed RFO 21 External surface except area from catwalk down to belt line completed. Remaining area to be inspected after S/U RFO21(completed pre RFO 22) Note: VT-1 completed below water line RFO20
E1.11	TORUS BAY 8	GV	100 %	Internal surface above water line completed RFO 21 External surface except area from catwalk down to belt line completed. Remaining area to be inspected after S/U RFO21(completed pre RFO 22) Note: VT-1 completed below water line RFO20
E1.11	TORUS BAY 9	GV	100 %	Internal surface above water line completed RFO 21 External surface except area from catwalk down to belt line completed. Remaining area to be inspected after S/U RFO21(completed pre RFO 22) Note: VT-1 completed below water line RFO20
E1.11	TORUS BAY 10	GV	100 %	Internal surface above water line completed RFO 21 External surface except area from catwalk down to belt line completed. Remaining area to be inspected after S/U RFO21(completed pre RFO 22) Note: VT-1 completed below water line RFO20
E1.11	TORUS BAY 11	GV	100 %	Internal surface above water line completed RFO 21 External surface except area from catwalk down to belt line completed. Remaining area to be inspected after S/U RFO21(completed pre RFO 22) Note: VT-1 completed below water line RFO20
E1.11	TORUS BAY 12	GV	100 %	Internal surface above water line completed RFO 21 External surface except area from catwalk down to belt line completed. Remaining area to be inspected after S/U RFO21(completed pre RFO 22) Note: VT-1 completed below water line RFO20
E1.11	TORUS BAY 13	GV	100 %	Internal surface above water line completed RFO 21 External surface except area from catwalk down to belt line completed. Remaining area to be inspected after S/U RFO21(completed pre RFO 22) Note: VT-1 completed below water line RFO20
E1.11	TORUS BAY 14	GV	100 %	Internal surface above water line completed RFO 21 External surface except area from catwalk down to belt line completed. Remaining area to be inspected after S/U RFO21(completed pre RFO 22) Note: VT-1 completed below water line RFO20
E1.11	TORUS BAY 15	GV	100 %	Internal surface above water line completed RFO 21 External surface except area from catwalk down to belt line completed. Remaining area to be inspected after S/U RFO21(completed pre RFO 22) Note: VT-1 completed below water line RFO20

E1.11	TORUS BAY 16	GV	100 %	Internal surface above water line completed RFO 21 External surface except area from catwalk down to belt line completed. Remaining area to be inspected after S/U RFO21(completed pre RFO 22) Note: VT-1 completed below water line RFO20
ASME SECTION XI EXAM. CATEGORY: E-A				
E1.11	VENT SYSTEM BAY 2 (VENT LINE ASSEMBLY, VACUUM BREAKER LINES, AND VENT HEADER IN BAY 2 AND BAY 3)	GV	100%	THE VENT LINE WAS COMPLETED FROM THE INTERNAL SURFACE RFO21. THE VACUUM BREAKER LINES WERE COMPLETED FROM THE EXTERNAL SURFACE TO THE PENETRATION 203 ELBOW THEN FROM THE INSIDE FROM THE 203 PENETRATION TO THE ELBOW VERTICAL WELD. THE EXTERNAL SURFACE OF THE VENT HEADER AND INTERNAL AND EXTERNAL SURFACES OF THE DOWNCOMERS WHERE COMPLETED RFO20. THE VENT HEADER INTERIOR, VENT LINE EXTERIOR, AND THE REMAINDER OF THE VACUUM LINE WILL BE SCHEDULED FOR RFO22. (completed pre RFO 22)
E1.20		VT3	100%	THE VENT LINE WAS COMPLETED FROM THE INTERNAL SURFACE RFO21. THE VACUUM BREAKER LINES WERE COMPLETED FROM THE EXTERNAL SURFACE TO THE PENETRATION 203 ELBOW THEN FROM THE INSIDE FROM THE 203 PENETRATION TO THE ELBOW VERTICAL WELD. THE EXTERNAL SURFACE OF THE VENT HEADER AND INTERNAL AND EXTERNAL DOWN COMER SURFACES WHERE COMPLETED RFO20.
E1.11	VENT SYSTEM BAY 4 (VENT LINE ASSEMBLY, VACUUM BREAKER LINES, AND VENT HEADER IN BAY 4 AND BAY 5)	GV	100%	THE VENT LINE WAS COMPLETED FROM THE INTERNAL SURFACE RFO21. THE VACUUM BREAKER LINES WERE COMPLETED FROM THE EXTERNAL SURFACE TO THE PENETRATION 203 ELBOW THEN FROM THE INSIDE FROM THE 203 PENETRATION TO THE ELBOW VERTICAL WELD. THE EXTERNAL SURFACE OF THE VENT HEADER AND INTERNAL AND EXTERNAL SURFACES OF THE DOWNCOMERS WHERE COMPLETED RFO20. THE VENT HEADER INTERIOR, VENT LINE EXTERIOR, AND THE REMAINDER OF THE VACUUM LINE WILL BE SCHEDULED FOR RFO22. (completed pre RFO 22)
E1.20		VT3	100%	THE VENT LINE WAS COMPLETED FROM THE INTERNAL SURFACE RFO21. THE VACUUM BREAKER LINES WERE COMPLETED FROM THE EXTERNAL SURFACE TO THE PENETRATION 203 ELBOW THEN FROM THE INSIDE FROM THE 203 PENETRATION TO THE ELBOW VERTICAL WELD. THE EXTERNAL SURFACE OF THE VENT HEADER AND INTERNAL AND EXTERNAL SURFACES OF THE DOWNCOMERS WHERE COMPLETED RFO20.
E1.11	VENT SYSTEM BAY 6 (VENT LINE ASSEMBLY, VACUUM BREAKER LINES, AND VENT HEADER IN BAY 6 AND BAY 7)	GV	100%	THE VENT LINE WAS COMPLETED FROM THE INTERNAL SURFACE RFO21. THE VACUUM BREAKER LINES WERE COMPLETED FROM THE EXTERNAL SURFACE TO THE PENETRATION 203 ELBOW THEN FROM THE INSIDE FROM THE 203 PENETRATION TO THE ELBOW VERTICAL WELD. THE EXTERNAL SURFACE OF THE VENT HEADER AND INTERNAL AND EXTERNAL SURFACES OF THE DOWNCOMERS WHERE COMPLETED RFO20. THE VENT HEADER INTERIOR, VENT LINE EXTERIOR, AND THE REMAINDER OF THE VACUUM LINE WILL BE SCHEDULED FOR RFO22. (completed pre RFO 22)

E1.11	VENT SYSTEM BAY 8 (VENT LINE ASSEMBLY, VACUUM BREAKER LINES, AND VENT HEADER IN BAY 8 AND BAY 9)	GV	100%	THE VENT LINE WAS COMPLETED FROM THE INTERNAL SURFACE RFO21. THE VACUUM BREAKER LINES WERE COMPLETED FROM THE EXTERNAL SURFACE TO THE PENETRATION 203 ELBOW THEN FROM THE INSIDE FROM THE 203 PENETRATION TO THE ELBOW VERTICAL WELD. THE EXTERNAL SURFACE OF THE VENT HEADER AND INTERNAL AND EXTERNAL SURFACES OF THE DOWNCOMERS WHERE COMPLETED RFO20. THE VENT HEADER INTERIOR, VENT LINE EXTERIOR, AND THE REMAINDER OF THE VACUUM LINE WILL BE SCHEDULED FOR RFO22. (completed pre RFO 22)
E1.11	VENT SYSTEM BAY 10 (VENT LINE ASSEMBLY, VACUUM BREAKER LINES, AND VENT HEADER IN BAY 10 AND BAY 11)	GV	100%	THE VENT LINE WAS COMPLETED FROM THE INTERNAL SURFACE RFO21. THE VACUUM BREAKER LINES WERE COMPLETED FROM THE EXTERNAL SURFACE TO THE PENETRATION 203 ELBOW THEN FROM THE INSIDE FROM THE 203 PENETRATION TO THE ELBOW VERTICAL WELD. THE EXTERNAL SURFACE OF THE VENT HEADER AND INTERNAL AND EXTERNAL SURFACES OF THE DOWNCOMERS WHERE COMPLETED RFO20. THE VENT HEADER INTERIOR, VENT LINE EXTERIOR, AND THE REMAINDER OF THE VACUUM LINE WILL BE SCHEDULED FOR RFO22. (completed pre RFO 22)
E1.11	VENT SYSTEM BAY 12 (VENT LINE ASSEMBLY, VACUUM BREAKER LINES, AND VENT HEADER IN BAY 12 AND BAY 13)	GV	100%	THE VENT LINE WAS COMPLETED FROM THE INTERNAL SURFACE RFO21. THE VACUUM BREAKER LINES WERE COMPLETED FROM THE EXTERNAL SURFACE TO THE PENETRATION 203 ELBOW THEN FROM THE INSIDE FROM THE 203 PENETRATION TO THE ELBOW VERTICAL WELD. THE EXTERNAL SURFACE OF THE VENT HEADER AND INTERNAL AND EXTERNAL SURFACES OF THE DOWNCOMERS WHERE COMPLETED RFO20. THE VENT HEADER INTERIOR, VENT LINE EXTERIOR, AND THE REMAINDER OF THE VACUUM LINE WILL BE SCHEDULED FOR RFO22. (completed pre RFO 22)
E1.11	VENT SYSTEM BAY 14 (VENT LINE ASSEMBLY, VACUUM BREAKER LINES, AND VENT HEADER IN BAY 14 AND BAY 15)	GV	100%	THE VENT LINE WAS COMPLETED FROM THE INTERNAL SURFACE RFO21. THE VACUUM BREAKER LINES WERE COMPLETED FROM THE EXTERNAL SURFACE TO THE PENETRATION 203 ELBOW THEN FROM THE INSIDE FROM THE 203 PENETRATION TO THE ELBOW VERTICAL WELD. THE EXTERNAL SURFACE OF THE VENT HEADER AND INTERNAL AND EXTERNAL SURFACES OF THE DOWNCOMERS WHERE COMPLETED RFO20. THE VENT HEADER INTERIOR, VENT LINE EXTERIOR, AND THE REMAINDER OF THE VACUUM LINE WILL BE SCHEDULED FOR RFO22(completed pre RFO 22)
E1.11	VENT SYSTEM BAY 16 (VENT LINE ASSEMBLY, VACUUM BREAKER LINES, AND VENT HEADER IN BAY 16 AND BAY 1)	GV	100%	THE VENT LINE WAS COMPLETED FROM THE INTERNAL SURFACE RFO21. THE VACUUM BREAKER LINES WERE COMPLETED FROM THE EXTERNAL SURFACE TO THE PENETRATION 203 ELBOW THEN FROM THE INSIDE FROM THE 203 PENETRATION TO THE ELBOW VERTICAL WELD. THE EXTERNAL SURFACE OF THE VENT HEADER AND INTERNAL AND EXTERNAL SURFACES OF THE DOWNCOMERS WHERE COMPLETED RFO20. THE VENT HEADER INTERIOR, VENT LINE EXTERIOR, AND THE REMAINDER OF THE VACUUM LINE WILL BE SCHEDULED FOR RFO22. (completed pre RFO 22)
CONTAINMENT SURFACES (TORUS PENETRATIONS)				ASME SECTION XI EXAM. CATEGORY: E-A
E1.11	Torus Penetration X-200A & B	GV	100%	COMPLETE INTERNAL AND EXTERNAL
E1.12		VT-3	100%	COMPLETE FROM EXTERNAL RFO21
E1.11	Torus Penetration X-201A THRU H	GV	100%	COMPLETE FROM INTERNAL RFO21 EXTERNAL TO BE SCHEDULED BEFORE OR DURING RFO22(completed pre RFO 22)

E1.11	Torus Penetration X-202A THRU F	GV	100%	COMPLETE FROM INTERNAL AND EXTERNAL RFO21
E1.11	Torus Penetration X-202G THRU K	GV	100%	COMPLETE FROM INTERNAL AND EXTERNAL RFO21
E1.11	Torus Penetration X-203A THRU F	GV	100%	COMPLETE FROM INTERNAL RFO21 EXTERNAL TO BE SCHEDULED BEFORE OR DURING RFO22(completed pre RFO 22)
E1.11	Torus Penetration X-203G THRU H	GV	100%	COMPLETE FROM INTERNAL RFO21 EXTERNAL TO BE SCHEDULED BEFORE OR DURING RFO22 (completed pre RFO 22)
E1.11	Torus Penetration X-205	GV	100%	COMPLETE FROM INTERNAL AND EXTERNAL RFO21
E1.11	Torus Penetration X-206A THRU D	GV	100%	A & D COMPLETED FROM INTERNAL RFO21 (B&C ARE BELOW WATER LINE FOR INTERNAL) B & C COMPLETED FROM EXTERNAL RFO21 A & D EXTERNAL RESCHEDULE FOR RFO22(completed pre RFO 22)
E1.12		VT-3	100%	B & C COMPLETED FROM EXTERNAL RFO21
E1.11	Torus Penetration X-206E THRU F	GV	100%	COMPLETE FROM EXTERNAL RFO21 (UNDERWATER)
E1.12		VT-3	100%	COMPLETE FROM EXTERNAL RFO21
E1.11	Torus Penetration X-207A THRU H	GV	100%	COMPLETE FROM EXTERNAL RFO21 INTERNAL TO BE RESCHEDULED FOR RFO22(completed RFO 22 IDR 01-08 generated and discrepancy accepted)
E1.11	Torus Penetration X-208A THRU D	GV	100%	COMPLETE FROM INTERNAL AND EXTERNAL RFO21
E1.11	Torus Penetration X-209A THRU D	GV	100%	A & D COMPLETED FROM INTERNAL RFO21 (B&C ARE BELOW WATER LINE FOR INTERNAL) B & C COMPLETED FROM EXTERNAL RFO21 A&D RESCHEDULE FOR RFO22(completed pre RFO 22)
E1.11	Torus Penetration X-210A & B	GV	100%	COMPLETE FROM INTERNAL AND EXTERNAL RFO21
E1.11	Torus Penetration X-211A & B	GV	100%	COMPLETE FROM INTERNAL AND EXTERNAL RFO21
E1.11	Torus Penetration X-212	GV	100%	COMPLETE FROM INTERNAL AND EXTERNAL RFO21
E1.11	Torus Penetration X-213A & B	GV	100%	COMPLETE FROM EXTERNAL RFO21 (UNDER WATER)
E1.12		VT-3	100%	COMPLETE FROM EXTERNAL RFO21 (UNDER WATER)
E1.11	Torus Penetration X-214	GV	100%	COMPLETE FROM INTERNAL AND EXTERNAL RFO21
E1.11	Torus Penetration X-215	GV	100%	COMPLETE FROM INTERNAL AND EXTERNAL RFO21
E1.11	Torus Penetration X-216	GV	100%	COMPLETE FROM INTERNAL AND EXTERNAL RFO21
E1.11	Torus Penetration X-217	GV	100%	COMPLETE FROM INTERNAL AND EXTERNAL RFO21
E1.11	Torus Penetration X-218	GV	100%	COMPLETE FROM INTERNAL AND EXTERNAL RFO21

E1.11	Torus Penetration X-219	GV	100%	COMPLETE FROM INTERNAL AND EXTERNAL RFO21
E1.11	Torus Penetration X-220	GV	100%	COMPLETE FROM INTERNAL AND EXTERNAL RFO21
E1.11	Torus Penetration X-221	GV	100%	COMPLETE FROM INTERNAL AND EXTERNAL RFO21
E1.11	Torus Penetration X-222	GV	100%	COMPLETE FROM INTERNAL AND EXTERNAL RFO21
E1.11	Torus Penetration X-223	GV	100%	COMPLETE FROM INTERNAL AND EXTERNAL RFO21
E1.11	Torus Penetration X-224A & B	GV	100%	COMPLETE FROM EXTERNAL RFO21
				INSULATION PREVENTING INSPECTION FROM EXTERNAL, INTERNAL UNDER WATER. THIS WILL BE RESCHEDULED WHEN DIVERS ARE IN TORUS OR TORUS HAS BEEN DRAINED ALONG WITH THE UNDERWATER SURFACES.
E1.11	Torus Penetration X-225	GV	100%	COMPLETE FROM EXTERNAL RFO21 (UNDER WATER)
E1.12		VT-3	100%	COMPLETE FROM EXTERNAL RFO21 (UNDER WATER)
E1.11	Torus Penetration X-226A & B	GV	100%	COMPLETE FROM EXTERNAL RFO21 (UNDER WATER)
E1.12		VT-3	100%	COMPLETE FROM EXTERNAL RFO21 (UNDER WATER)
E1.11	Torus Penetration X-227	GV	100%	COMPLETE FROM EXTERNAL RFO21 (UNDER WATER)
E1.12		VT-3	100%	COMPLETE FROM EXTERNAL RFO21 (UNDER WATER)
E1.11	Torus Penetration X-228	GV	100%	COMPLETED FROM EXTERIOR RFO21 (NOT ACCESSIBLE FROM INTERIOR)
E1.11	Torus Penetration X-229	GV	100%	COMPLETED FROM EXTERIOR RFO21 (NOT ACCESSIBLE FROM INTERIOR)
E1.11	Torus Penetration X-230	GV	100%	COMPLETED FROM EXTERIOR RFO21
E1.11	Torus Penetration X-231 A-H	GV	100%	A,C,E, &G COMPLETED FROM INTERIOR RFO21 (B,D,F &H ARE UNDER WATER FROM INTERNAL) B,D,F,G & H COMPLETED FROM EXTERNAL RFO21 RESCHEDULE A,C, & E FOR RFO22(completed pre RFO 22)
CONTAINMENT SURFACES (DRYWELL SURFACES)				ASME SECTION XI EXAM. CATEGORY: E-A
E1.11	Drywell elevation 238 to elevation 251 quadrant 0 to 90 degrees	GV	100%	COMPLETED FROM INTERNAL RFO21 EXTERNAL INACCESSIBLE BY DESIGN
E1.12		VT-3	100%	COMPLETED FROM INTERNAL RFO21 EXTERNAL INACCESSIBLE BY DESIGN
E1.11	Drywell elevation 238 to elevation 251 quadrant 90 to 180 degrees	GV	100%	COMPLETED FROM INTERNAL RFO21 EXTERNAL INACCESSIBLE BY DESIGN
E1.12		VT-3	100%	COMPLETED FROM INTERNAL RFO21 EXTERNAL INACCESSIBLE BY DESIGN
E1.11	Drywell elevation 238 to elevation 251 quadrant 180 to 270 degrees	GV	100%	COMPLETED FROM INTERNAL RFO21 EXTERNAL INACCESSIBLE BY DESIGN

E1.12		VT-3	100%	COMPLETED FROM INTERNAL RFO21 EXTERNAL INACCESSIBLE BY DESIGN
E1.11	Drywell elevation 238 to elevation 251 quadrant 270 to 360 degrees	GV	100%	COMPLETED FROM INTERNAL RFO21 EXTERNAL INACCESSIBLE BY DESIGN
E1.12		VT-3	100%	COMPLETED FROM INTERNAL RFO21 EXTERNAL INACCESSIBLE BY DESIGN
E1.11	Drywell elevation 251 to elevation 269 quadrant 0 to 90 degrees	GV	100%	COMPLETED FROM INTERNAL RFO21 EXTERNAL INACCESSIBLE BY DESIGN
E1.12		VT-3	100%	COMPLETED FROM INTERNAL RFO21 EXTERNAL INACCESSIBLE BY DESIGN
E1.11	Drywell elevation 251 to elevation 269 quadrant 90 to 180 degrees	GV	100%	COMPLETED FROM INTERNAL RFO21 EXTERNAL INACCESSIBLE BY DESIGN
E1.11	Drywell elevation 251 to elevation 269 quadrant 180 to 270 degrees	GV	100%	COMPLETED FROM INTERNAL RFO21 EXTERNAL INACCESSIBLE BY DESIGN
E1.11	Drywell elevation 251 to elevation 269 quadrant 270 to 360 degrees	GV	100%	COMPLETED FROM INTERNAL RFO21 EXTERNAL INACCESSIBLE BY DESIGN
E1.11	Drywell elevation 269 to elevation 321 quadrant 0 to 90 degrees	GV	100%	COMPLETED FROM INTERNAL RFO21 EXTERNAL INACCESSIBLE BY DESIGN
E1.11	Drywell elevation 269 to elevation 321 quadrant 90 to 180 degrees	GV	100%	COMPLETED FROM INTERNAL RFO21 EXTERNAL INACCESSIBLE BY DESIGN
E1.11	Drywell elevation 269 to elevation 321 quadrant 180 to 270 degrees	GV	100%	COMPLETED FROM INTERNAL RFO21 EXTERNAL INACCESSIBLE BY DESIGN
E1.11	Drywell elevation 269 to elevation 321 quadrant 270 to 360 degrees	GV	100%	COMPLETED FROM INTERNAL RFO21 EXTERNAL INACCESSIBLE BY DESIGN
E1.11	Drywell Head interior surfaces and Drywell flanges	GV	100%	COMPLETED RFO21
E1.11	Drywell Head exterior surfaces	GV	100%	COMPLETED RFO21
CONTAINMENT SURFACES (DRYWELL PENETRATIONS)				
E1.11	Drywell Penetration X-1	GV	100%	COMPLETED INTERNAL AND EXTERNAL RFO21 PORTIONS OF THE EXTERNAL AREA ARE INACCESSIBLE FROM DIRECT VISUAL EXAMINATION BY DESIGN
E1.11	Drywell Penetration X-2	GV	100%	COMPLETED INTERNAL AND EXTERNAL RFO21 PORTIONS OF THE EXTERNAL AREA ARE INACCESSIBLE FROM DIRECT VISUAL EXAMINATION BY DESIGN

E1.11	Drywell Penetration X-4	GV	100%	COMPLETED INTERNAL AND EXTERNAL RFO21
E1.11	Drywell Penetration X-5A THRU X-5H	GV	100%	COMPLETED INTERNAL RFO21 EXTERNAL TO BE COMPLETED BEFORE OR DURING RFO22(completed pre RFO 22)
E1.12		VT-3		COMPLETED FROM THE INTERNAL SURFACE RFO21
E1.11	Drywell Penetration X-6	GV	100%	COMPLETED FROM INTERIOR RFO21 RESCHEDULE EXTERIOR BEFORE OR DURING RFO22(completed pre RFO 22)
E1.11	Drywell Penetration X-7A	GV	100%	COMPLETED FROM INTERNAL RFO21 EXTERNAL TO BE SCHEDULED BEFORE OR DURING RFO22(completed RFO 22)
E1.11	Drywell Penetration X-7B	GV	100%	COMPLETED FROM INTERNAL RFO21 EXTERNAL TO BE SCHEDULED BEFORE OR DURING RFO22(completed RFO 22)
E1.11	Drywell Penetration X-7C	GV	100%	COMPLETED FROM INTERNAL RFO21 EXTERNAL TO BE SCHEDULED BEFORE OR DURING RFO22(completed RFO 22)
E1.11	Drywell Penetration X-7D	GV	100%	COMPLETED FROM INTERNAL RFO21 EXTERNAL TO BE SCHEDULED BEFORE OR DURING RFO22(completed RFO 22)
E1.11	Drywell Penetration X-8	GV	100%	COMPLETED FROM INTERNAL RFO21 EXTERNAL TO BE SCHEDULED BEFORE OR DURING RFO22(completed pre RFO 22)
E1.12		VT-3	100%	COMPLETED FROM INTERNAL RFO21
E1.11	Drywell Penetration X-9A	GV	100%	COMPLETED FROM INTERNAL RFO21 EXTERNAL TO BE SCHEDULED BEFORE OR DURING RFO22(completed RFO 22)
E1.11	Drywell Penetration X-9B	GV	100%	COMPLETED FROM INTERNAL RFO21 EXTERNAL TO BE SCHEDULED BEFORE OR DURING RFO22(completed RFO 22)
E1.11	Drywell Penetration X-10	GV	100%	RESCHEDULE FOR RFO22 (completed RFO 22) External surface insulated restricting access for GV Exam. Normal internal surface has limited view from existing vantage points
E1.11	Drywell Penetration X-11	GV	100%	RESCHEDULE FOR RFO22 (completed RFO 22) External surface insulated restricting access for GV Exam. Normal internal surface has limited view from existing vantage points
E1.11	Drywell Penetration X-12	GV	100%	COMPLETED FROM INTERNAL RFO21 (INACCESSIBLE AREA IDENTIFIED) EXTERNAL TO BE SCHEDULED BEFORE OR DURING RFO22(completed pre RFO 22)

E1.11	Drywell Penetration X-13A	GV	100%	COMPLETED FROM INTERNAL RFO21 EXTERNAL TO BE SCHEDULED BEFORE OR DURING RFO22 (completed pre RFO 22)
E1.11	Drywell Penetration X-13B	GV	100%	COMPLETED FROM INTERNAL RFO21 EXTERNAL TO BE SCHEDULED BEFORE OR DURING RFO22 (completed pre RFO 22)
E1.11	Drywell Penetration X-14	GV	100%	THIS PENETRATION IS NOT ACCESSIBLE FOR GV EXAM OF INTERNAL SURFACE. REVIEW FOR RFO22 (completed RFO 22)
E1.11	Drywell Penetration X-15	GV	100%	THIS PENETRATION IS NOT ACCESSIBLE FOR GV EXAM OF INTERNAL SURFACE. (completed RFO 22)
E1.11	Drywell Penetration X-16A	GV	100%	THIS PENETRATION IS NOT ACCESSIBLE FOR GV EXAM OF INTERNAL SURFACE. (completed RFO 22)
E1.11	Drywell Penetration X-16B	GV	100%	THIS PENETRATION IS NOT ACCESSIBLE FOR GV EXAM OF INTERNAL SURFACE. (completed RFO 22)
E1.11	Drywell Penetration X-17	GV	100%	COMPLETED FROM INTERNAL RFO21 EXTERNAL TO BE SCHEDULED BEFORE OR DURING RFO22 (completed pre RFO 22)
E1.11	Drywell Penetration X-18	GV	100%	COMPLETED FROM INTERNAL RFO21 EXTERNAL TO BE SCHEDULED BEFORE OR DURING RFO22 (completed pre RFO 22)
E1.11	Drywell Penetration X-19	GV	100%	COMPLETED FROM INTERNAL RFO21 EXTERNAL TO BE SCHEDULED BEFORE OR DURING RFO22 (completed RFO 22)
E1.11	Drywell Penetration X-20	GV	100%	COMPLETED FROM INTERNAL RFO21 EXTERNAL TO BE SCHEDULED BEFORE OR DURING RFO22(completed pre RFO 22)
E1.11	Drywell Penetration X-21	GV	100%	COMPLETED FROM INTERNAL RFO21 EXTERNAL TO BE SCHEDULED BEFORE OR DURING RFO22(completed pre RFO 22)
E1.11	Drywell Penetration X-22	GV	100%	COMPLETED FROM INTERNAL RFO21 EXTERNAL TO BE SCHEDULED BEFORE OR DURING RFO22(completed pre RFO 22)
E1.11	Drywell Penetration X-23	GV	100%	INSULATION PREVENTS ACCESS FOR GV EXAM FROM INTERNAL SURFACE. (completed RFO 22)
E1.11	Drywell Penetration X-24	GV	100%	INSULATION PREVENTS ACCESS FOR GV EXAM FROM INTERNAL SURFACE (completed RFO 22)
E1.11	Drywell Penetration X-25	GV	100%	COMPLETED FROM INTERNAL RFO21 EXTERNAL TO BE SCHEDULED BEFORE OR DURING RFO22(completed pre RFO 22)
E1.11	Drywell Penetration X-26	GV	100%	COMPLETED FROM INTERNAL RFO21 EXTERNAL TO BE SCHEDULED BEFORE OR DURING RFO22 (completed pre RFO 22)

E1.12		VT-3	100%	COMPLETED FROM INTERNAL RFO21
E1.11	Drywell Penetration X-27	GV	100%	COMPLETED FROM INTERNAL RFO21 EXTERNAL TO BE SCHEDULED BEFORE OR DURING RFO22 (completed RFO 22)
E1.11	Drywell Penetration X-28	GV	100%	COMPLETED FROM INTERNAL RFO21 EXTERNAL TO BE SCHEDULED BEFORE OR DURING RFO22 (completed RFO 22)
E1.11	Drywell Penetration X-29	GV	100%	RESCHEDULE FOR RFO22 INTERNAL SURFACE NOT SAFELY ACCESSIBLE FOR GV EXAMINATION (completed RFO 22)
E1.11	Drywell Penetration X-30	GV	100%	COMPLETED FROM INTERNAL RFO21 EXTERNAL TO BE SCHEDULED BEFORE OR DURING RFO22 (completed pre RFO 22)
E1.12		VT-3	100%	COMPLETED FROM INTERNAL RFO21
E1.11	Drywell Penetration X-31	GV	100%	COMPLETED FROM INTERNAL RFO21 EXTERNAL TO BE SCHEDULED BEFORE OR DURING RFO22 (completed pre RFO 22)
E1.12		VT-3	100%	COMPLETED FROM INTERNAL RFO21
E1.11	Drywell Penetration X-32	GV	100%	COMPLETED FROM INTERNAL RFO21 EXTERNAL TO BE SCHEDULED BEFORE OR DURING RFO22 (completed pre RFO 22)
E1.12		VT-3	100%	COMPLETED FROM INTERNAL RFO21
E1.11	Drywell Penetration X-33	GV	100%	COMPLETED FROM INTERNAL RFO21 EXTERNAL TO BE SCHEDULED BEFORE OR DURING RFO22 (completed pre RFO 22)
E1.11	Drywell Penetration X-34	GV	100%	RESCHEDULE FOR RFO22 (completed pre RFO 22)
E1.11	Drywell Penetration X-35A	GV	100%	COMPLETED FROM INTERNAL AND EXTERNAL RFO21 THIS PENETRATION IS PARTIALLY ACCESSIBLE FOR GV EXAM
E1.12		VT-3	100%	COMPLETED FROM INTERNAL RFO21
E1.11	Drywell Penetration X-35B	GV	100%	COMPLETED FROM INTERNAL AND EXTERNAL RFO21 THIS PENETRATION IS PARTIALLY ACCESSIBLE FOR GV EXAM
E1.12		VT-3	100%	COMPLETED FROM INTERNAL RFO21
E1.11	Drywell Penetration X-35C	GV	100%	COMPLETED FROM INTERNAL AND EXTERNAL RFO21 THIS PENETRATION IS PARTIALLY ACCESSIBLE FOR GV EXAM
E1.12		VT-3	100%	COMPLETED FROM INTERNAL RFO21
E1.11	Drywell Penetration X-35D	GV	100%	COMPLETED FROM INTERNAL AND EXTERNAL RFO21 THIS PENETRATION IS PARTIALLY ACCESSIBLE FOR GV EXAM
E1.12		VT-3	100%	COMPLETED FROM INTERNAL RFO21
E1.11	Drywell Penetration X-35E	GV	100%	COMPLETED FROM INTERNAL AND EXTERNAL RFO21 THIS PENETRATION IS PARTIALLY ACCESSIBLE FOR GV EXAM

E1.12		VT-3	100%	COMPLETED FROM INTERNAL RFO21
E1.11	Drywell Penetration X-36	GV	100%	COMPLETED FROM INTERNAL RFO21 EXTERNAL TO BE SCHEDULED BEFORE OR DURING RFO22 (completed pre RFO 22) THIS PENETRATION IS NOT SAFELY ACCESSIBLE FOR GV EXAM.
E1.11	Drywell Penetration X-37A	GV	100%	COMPLETED FROM INTERNAL RFO21 EXTERNAL TO BE SCHEDULED BEFORE OR DURING RFO22 (completed pre RFO 22) THIS PENETRATION IS NOT ACCESSIBLE FOR GV EXAM DUE TO PROXIMITY OF PIPES TO EACH OTHER AND THE MINIMAL CLEARANCES BETWEEN THE CRD PIPING AND THE CONCRETE SLEEVES.
E1.11	Drywell Penetration X-37B	GV	100%	COMPLETED FROM INTERNAL RFO21 EXTERNAL TO BE SCHEDULED BEFORE OR DURING RFO22 (completed pre RFO 22) THIS PENETRATION IS NOT ACCESSIBLE FOR GV EXAM DUE TO PROXIMITY OF PIPES TO EACH OTHER AND THE MINIMAL CLEARANCES BETWEEN THE CRD PIPING AND THE CONCRETE SLEEVES.
E1.11	Drywell Penetration X-37C	GV	100%	COMPLETED FROM INTERNAL RFO21 EXTERNAL TO BE SCHEDULED BEFORE OR DURING RFO22 (completed pre RFO 22) THIS PENETRATION IS NOT ACCESSIBLE FOR GV EXAM DUE TO PROXIMITY OF PIPES TO EACH OTHER AND THE MINIMAL CLEARANCES BETWEEN THE CRD PIPING AND THE CONCRETE SLEEVES.
E1.11	Drywell Penetration X-37D	GV	100%	COMPLETED FROM INTERNAL RFO21 EXTERNAL TO BE SCHEDULED BEFORE OR DURING RFO22 (completed pre RFO 22) THIS PENETRATION IS NOT ACCESSIBLE FOR GV EXAM DUE TO PROXIMITY OF PIPES TO EACH OTHER AND THE MINIMAL CLEARANCES BETWEEN THE CRD PIPING AND THE CONCRETE SLEEVES.
E1.11	Drywell Penetration X-38A	GV	100%	COMPLETED FROM INTERNAL RFO21 EXTERNAL TO BE SCHEDULED BEFORE OR DURING RFO22 (completed pre RFO 22) THIS PENETRATION IS NOT ACCESSIBLE FOR GV EXAM DUE TO PROXIMITY OF PIPES TO EACH OTHER AND THE MINIMAL CLEARANCES BETWEEN THE CRD PIPING AND THE CONCRETE SLEEVES.
E1.11	Drywell Penetration X-38B	GV	100%	COMPLETED FROM INTERNAL RFO21 EXTERNAL TO BE SCHEDULED BEFORE OR DURING RFO22 *(completed pre RFO 22) THIS PENETRATION IS NOT ACCESSIBLE FOR GV EXAM DUE TO PROXIMITY OF PIPES TO EACH OTHER AND THE MINIMAL CLEARANCES BETWEEN THE CRD PIPING AND THE CONCRETE SLEEVES.
E1.11	Drywell Penetration X-38C	GV	100%	COMPLETED FROM INTERNAL RFO21 EXTERNAL TO BE SCHEDULED BEFORE OR DURING RFO22 (completed pre RFO 22) THIS PENETRATION IS NOT ACCESSIBLE FOR GV EXAM DUE TO PROXIMITY OF PIPES TO EACH OTHER AND THE MINIMAL CLEARANCES BETWEEN THE CRD PIPING AND THE CONCRETE SLEEVES.
E1.11	Drywell Penetration X-38D	GV	100%	COMPLETED FROM INTERNAL RFO21 EXTERNAL TO BE SCHEDULED BEFORE OR DURING RFO22 (completed pre RFO 22) THIS PENETRATION IS NOT ACCESSIBLE FOR GV EXAM DUE TO PROXIMITY OF PIPES TO EACH OTHER AND THE MINIMAL CLEARANCES BETWEEN THE CRD PIPING AND THE CONCRETE SLEEVES.
E1.11	Drywell Penetration X-39A	GV	100%	COMPLETED FROM INTERNAL RFO21 EXTERNAL TO BE SCHEDULED BEFORE OR DURING RFO22 (completed pre RFO 22) THIS PENETRATION IS INACCESSIBLE FOR GV EXAM OF EXTERNAL SURFACES DUE TO INSULATION

E1.11	Drywell Penetration X-39B	GV	100%	COMPLETED FROM INTERNAL RFO21 EXTERNAL TO BE SCHEDULED BEFORE OR DURING RFO22 (completed pre RFO 22)
E1.11	Drywell Penetration X-40A	GV	100%	COMPLETED FROM INTERNAL RFO21 EXTERNAL TO BE SCHEDULED BEFORE OR DURING RFO22 (completed pre RFO 22) THIS PENETRATION IS NOT SAFELY ACCESSIBLE FOR GV EXAM OF EXTERNAL SURFACE
E1.11	Drywell Penetration X-40B	GV	100%	COMPLETED FROM INTERNAL RFO21 EXTERNAL TO BE SCHEDULED BEFORE OR DURING RFO22 (completed pre RFO 22) THIS PENETRATION IS NOT SAFELY ACCESSIBLE FOR GV EXAM OF EXTERNAL SURFACE
E1.11	Drywell Penetration X-40C	GV	100%	COMPLETED FROM INTERNAL RFO21 EXTERNAL TO BE SCHEDULED BEFORE OR DURING RFO22 (completed pre RFO 22)THIS PENETRATION IS NOT SAFELY ACCESSIBLE FOR GV EXAM OF EXTERNAL SURFACE
E1.11	Drywell Penetration X-40D	GV	100%	COMPLETED FROM INTERNAL RFO21 EXTERNAL TO BE SCHEDULED BEFORE OR DURING RFO22 (completed pre RFO 22) THIS PENETRATION IS NOT SAFELY ACCESSIBLE FOR GV EXAM OF EXTERNAL SURFACE
E1.11	Drywell Penetration X-41	GV	100%	RESCHEDULE FOR RFO22 (completed RFO 22) THE INTERNAL SURFACE OF THIS PENETRATION IS NOT SAFELY ACCESSIBLE FOR GV EXAM
E1.11	Drywell Penetration X-42	GV	100%	COMPLETED FROM INTERNAL RFO21 EXTERNAL TO BE SCHEDULED BEFORE OR DURING RFO22 (completed pre RFO 22)
E1.11	Drywell Penetration X-43	GV	100%	COMPLETED FROM INTERNAL RFO21 EXTERNAL TO BE SCHEDULED BEFORE OR DURING RFO22 (completed RFO 22) THE EXTERNAL SURFACE OF THIS PENETRATION IS NOT SAFELY ACCESSIBLE FOR GV EXAM
E1.11	Drywell Penetration X-44	GV	100%	COMPLETED FROM INTERNAL RFO21 EXTERNAL TO BE SCHEDULED BEFORE OR DURING RFO22 (completed RFO 22) THE EXTERNAL SURFACE OF THIS PENETRATION IS NOT SAFELY ACCESSIBLE FOR GV EXAM
E1.11	Drywell Penetration X-45	GV	100%	COMPLETED FROM INTERNAL RFO21 EXTERNAL TO BE SCHEDULED BEFORE OR DURING RFO22 (completed pre RFO 22)
E1.11	Drywell Penetration X-46	GV	100%	COMPLETED FROM INTERNAL RFO21 EXTERNAL TO BE SCHEDULED BEFORE OR DURING RFO22 (completed RFO 22) THE EXTERNAL SURFACE OF THIS PENETRATION IS NOT SAFELY ACCESSIBLE FOR GV EXAM
E1.11	Drywell Penetration X-47	GV	100%	RESCHEDULE FOR RFO22(completed RFO 22) THE INTERNAL SURFACE OF THIS PENETRATION IS NOT SAFELY ACCESSIBLE FOR GV EXAM
E1.11	Drywell Penetration X-48	GV	100%	COMPLETED FROM INTERNAL RFO21 EXTERNAL TO BE SCHEDULED BEFORE OR DURING RFO22 (completed pre RFO 22)
E1.11	Drywell Penetration X-49	GV	100%	COMPLETED FROM INTERNAL RFO21 EXTERNAL TO BE SCHEDULED BEFORE OR DURING RFO22 (completed pre RFO 22)
E1.11	Drywell Penetration X-50	GV	100%	COMPLETED FROM INTERNAL RFO21 EXTERNAL TO BE SCHEDULED BEFORE OR DURING RFO22 (completed pre RFO 22)

E1.11	Drywell Penetration X-104B	GV	100%	COMPLETED FROM INTERNAL RFO21 (INACCESSIBLE AREA IDENTIFIED) EXTERNAL TO BE SCHEDULED BEFORE OR DURING RFO22 (completed pre RFO 22)
E1.11	Drywell Penetration X-104C	GV	100%	COMPLETED FROM INTERNAL RFO21 (INACCESSIBLE AREA IDENTIFIED) EXTERNAL TO BE SCHEDULED BEFORE OR DURING RFO22 (completed pre RFO 22)
E1.11	Drywell Penetration X-105A	GV	100%	COMPLETED FROM INTERNAL RFO21 (INACCESSIBLE AREA IDENTIFIED) EXTERNAL TO BE SCHEDULED BEFORE OR DURING RFO22 (completed pre RFO 22)
E1.11	Drywell Penetration X-105B	GV	100%	COMPLETED FROM INTERNAL RFO21 (INACCESSIBLE AREA IDENTIFIED) EXTERNAL TO BE SCHEDULED BEFORE OR DURING RFO22 (completed pre RFO 22)
E1.11	Drywell Penetration X-105C	GV	100%	COMPLETED FROM INTERNAL RFO21 (INACCESSIBLE AREA IDENTIFIED) EXTERNAL TO BE SCHEDULED BEFORE OR DURING RFO22 (completed pre RFO 22)
E1.11	Drywell Penetration X-105D	GV	100%	COMPLETED FROM INTERNAL RFO21 (INACCESSIBLE AREA IDENTIFIED) EXTERNAL TO BE SCHEDULED BEFORE OR DURING RFO22 (completed pre RFO 22)
E1.11	Drywell Penetration X-106	GV	100%	COMPLETED FROM INTERNAL RFO21 EXTERNAL TO BE SCHEDULED BEFORE OR DURING RFO22 (completed pre RFO 22)
E1.11	Drywell Penetration X-107	GV	100%	COMPLETED FROM INTERNAL RFO21 EXTERNAL TO BE SCHEDULED BEFORE OR DURING RFO22 (completed pre RFO 22)

CONTAINMENT SEALS, GASKETS, AND MOISTURE BARRIERS				ASME SECTION XI EXAM. CATEGORY: E-D
ASME SECTION XI ITEM NO.	ISI IDENTIFICATION NO./DESCRIPTION	Exam	% COMPLETE TO DATE	REMARKS
E5.30	DRY WELL INTERIOR MOISTURE BARRIER	VT-3	100%	INSPECTION COMPLETED RFO21 DISCREPANCIES WERE IDENTIFIED AND DISPOSITION FOR THIS ITEM IS WITH MECHANICAL DESIGN ENGINEERING

CONTAINMENT SURFACES REQUIRING AUGMENTED EXAMINATION				ASME CLASS MC	ASME SECTION XI EXAM. CATEGORY: E-C
ASME SECTION XI ITEM NUMBER	ISI IDENTIFICATION NO./DESCRIPTION	Exam	% COMPLETE TO DATE	REMARKS	
E4.11	Drywell Interior Surface at the Moisture Barrier Interface	VT-1	100%	The area identified for augmented exam of the Drywell surface at the moisture barrier interface shall be from containment plate weld joint left of X-5B to the containment plate weld joint right of penetration X-5E and from the concrete metal interface up 1 foot. Complete RFO22	

E4.12	Drywell Interior Surface at the Moisture Barrier Interface	Volumetric	100%	The area identified for augmented exam of the Drywell surface at the moisture barrier interface shall be from containment plate weld joint left of X-5B to the containment plate weld joint right of penetration X-5E and from the concrete metal interface up 1 foot. Complete RFO22

CONTAINMENT PRESSURE RETAINING BOLTING				ASME SECTION XI EXAM. CATEGORY: E-G
ASME SECTION XI ITEM NO.	ISI IDENTIFICATION NO./DESCRIPTION	Exam	% COMPLETE TO DATE	REMARKS
E8.10	TORUS MANWAY FLANGE BOLTING PENETRATION 200A	VT-1	100%	RESCHEDULE FOR RFO22 (completed RFO 22)
E8.10	TORUS MANWAY FLANGE BOLTING PENETRATION 200B	VT-1	100%	RESCHEDULE FOR RFO22 (completed RFO 22)
E8.10	V16-19-5A-F	VT-1	100%	RFO22 INSTALLED
E8.10	V16-19-5G,H	VT-1	100%	RFO22 REMOVED

Vermont Yankee
Visual Examination Report Form
VT-1, Containment Surfaces (IWE)

Data Sheet No: 8045-01-010

Work Order No.: 00-5037

Procedure No/Rev.: NE 8045 REV. 1

Page 1 of 1 Date: 5-1-01

Component

Component ID: DRYWELL INTERIOR MOISTURE BARRIER System: PRIMARY CONTAINMENT

Drawing No/Rev.: 6202-2 Rev. 0 LOCATION: ELEV. 238' VENT LINE AREAS X-5B, C, D, E

Visual Aids			Illumination Level Check		
■ Mirror	■ Illumination Card/No. VY 8			Time	Date
■ Light Source (Describe)	■ Other: DEARMAN UNDERCUT GUAGE		Initial PRE 213 FC	8:05 AM	5-1-01
Method	Photo	Sketch	Intermediate	N/A	N/A
■ Direct	■ None	■ None	Intermediate	N/A	N/A
☐ Remote	☐ Attached	☐ Attached	Final POST 178 FC	9:15 AM	5-1-01

Remote Examination Conditions/Equipment Remarks Light Meter Used No. 812153 Due 4-13-02

	Acceptable	Recordable	N/A	Remarks/Observations
Cracks/Linears			J.E. 5-1-01	NOTE: Augmented UT-1 insp.
Physical Damage		J.E. 5-1-01		performed to ascertain no
Corrosion		J.E. 5-1-01		further degredation to
Erosion			J.E. 5-1-01	base metal has occured on
Gouges			J.E. 5-1-01	areas documented on Report
Wear			J.E. 5-1-01	VA-IWE-UT-188. Conditions
Arc Strikes			J.E. 5-1-01	are the same. See report
Other (Explain)			J.E. 5-1-01	VA-IWE-UT-188. No further degredation measured.

Examiner: Ted El-Hajj Level: II Date: 5-1-01

Examiner: N/A Level: N/A Date: N/A

Reviewer: [signature] Date: 5/2/01

Reviewer: N/A Date: N/A

ANII: [signature] Date: 5-1-01

Evaluation Required? ☐ Yes ☒ No

Data Sheet No.: 8053-01-063
Procedure No/Rev. NE 8053 Rev 0/LPC #1
Page 1 of 2 Date: 5/8/01
Work Order Number: 00-005037-000

Thickness Calibration Data Sheet

Component * ISIE EXAM CATEGORY E-C GWO 5-10-01

Component ID: Drywell Seal Area * System: Drywell
Drawing Number/Rev.: 6202-2 Rev 0 Plant Location: Drywell elev. 238
Material: C/S Product Form: Wrought Nominal Thickness: 1.000/2.500

Instrument

Instrument Make: Panametrics Instrument Model: 26 DL Plus Instrument S/N: 93129307

Instrument Display: CRT ( ) Digital (✓) Horizontal Linearity Performed?: Yes ( ) No (✓)

Calibration Block

Serial Number: E/C 1-1, E/C 1-2 Calibration Block Material: C/S Product Form: Wrought
Block Temperature: 75 °F Thicknesses: .800 - 3.001
M&TE Used?: Yes ( ) No (✓) M&TE Description / S/N: N/A

Calibration Times

Initial Calibration: 0800 Check: 1300 Check: N/A Check: N/A Check: N/A Final: 1630

Sketch and Examination Results: See page two

* REPAIR AREA PRIOR TO PAINT APPLICATION
GWO 5-10-01

** These examinations are not for a repair area. These UT examinations were requested by the Responsible Engineer as the initial base line UT thickness readings for the defined augmented examinations in the drywell Seal Area. The drywell to steel moisure barrier was in the process of being replaced and as a result, the lower 6" of steel containment to floor had the paint removed to clean metal in preparation for the seal replacement. The low points in the one-foot by one-foot grids typically occurred in the lower 6" area. All low point thickness identified are bounded by evaluation VYM 99/139 and are acceptable without further evaluations. RC 5/11/01

Component Temperature: 75 F°

Examiner: Robert B. Birkbeck Level: II-L Date: 5/8/01
Examiner: Jason Polisensky Level: II Date: 5/8/01
Reviewer: GWO Date: 5-10-01
** Cog. Engineer: Responsible Engineer Date: 5/11/01
ANII: Date: 5-11-01

Evaluation Required:
xxx
Yes (✓) No ( )

Form Number:
VYNEF8053.01
Page 1 of 1
NE 8053 Original
LPC # 1

Experience Hours Credit: _____

xxx See explanation provided Above. Accept as is. Responsible Engineer 5/11/01

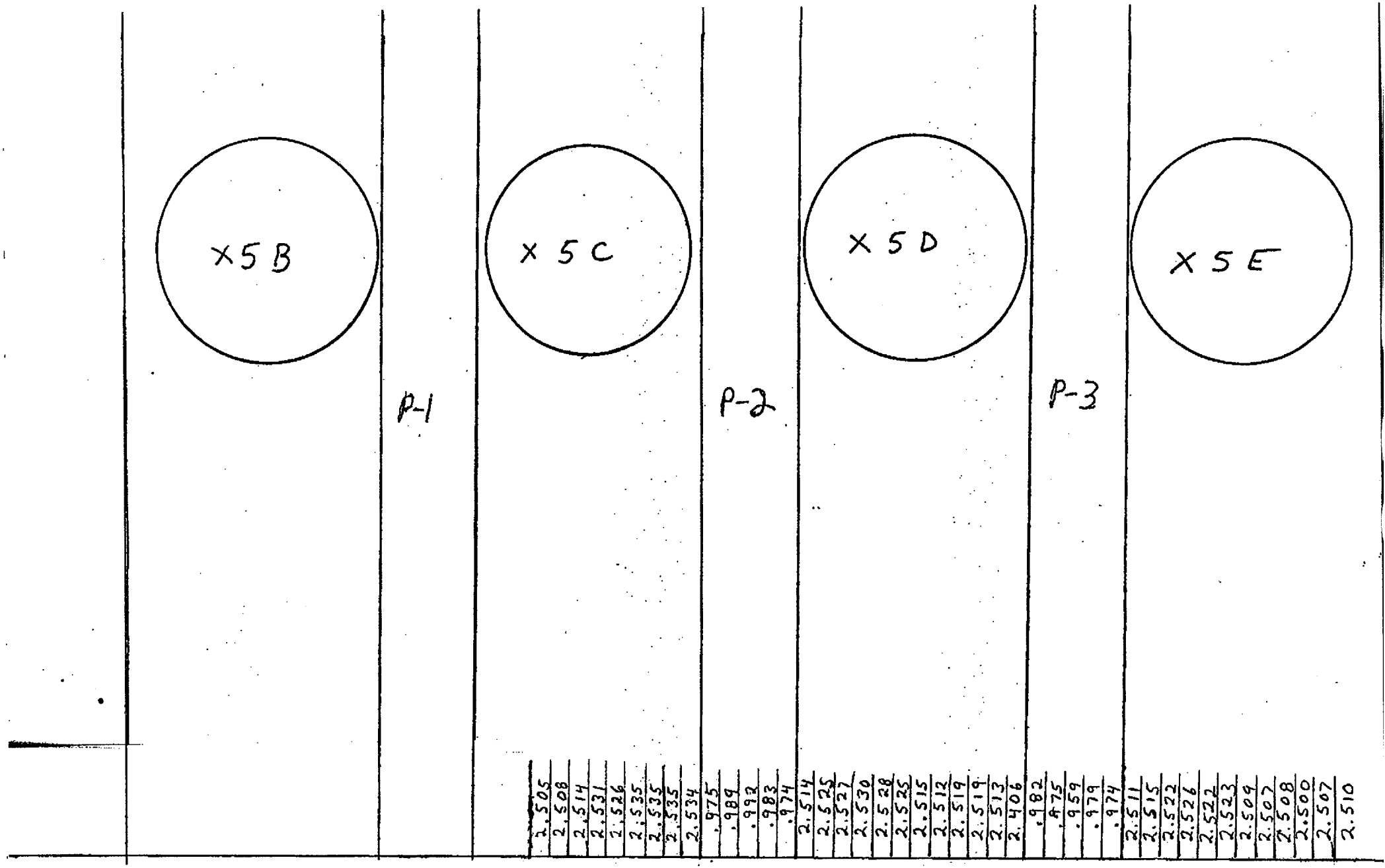

43 12"x12" grids

FLOOR

Robert B Eckhardt LV II L 5/8/01

Jason Polovsky II 5/8/01

[illegible] 5-11-01

REVIEW: [illegible] 5-10-01

DATA SHEET NO. 8053-01-063

Data Sheet No.: 8053-01-064
Procedure No/Rev. NE 8053 REV 0/LPC #1
Page 1 of 2 Date: 5-9-01
Work Order Number: 00-005037-000

Thickness Calibration Data Sheet

Component * IWE EXAM CATEGORY E-C MSO 5.10.01

Component ID: DRY WELL SEAL AREA * System: DRYWELL
Drawing Number/Rev.: 6202-2 REV 0 Plant Location: DRYWELL 232' ELV.
Material: CARBON STEEL Product Form: WROUGHT Nominal Thickness: 1.0" & 2.5"

Instrument

Instrument Make: PANAMETRICS Instrument Model: 26 DL PLUS Instrument S/N: 9312 9307

Instrument Display: CRT ( ) Digital (✓) Horizontal Linearity Performed?: Yes ( ) No (✓)

Calibration Block

Serial Number: E/C 1-1 / E/C 1-2 Calibration Block Material: CARBON STEEL Product Form: WROUGHT
Block Temperature: 75 °F Thicknesses: 0.800", 0.899", 1.500", 2.000", 2.501", 3.001
M&TE Used?: Yes ( ) No (✓) M&TE Description / S/N:

Calibration Times

Initial Calibration: 0800 Check: N/A Check: N/A Check: N/A Check: N/A Final: 1050

Sketch and Examination Results: SEE PAGE TWO.

* REPAIR AREA PRIOR TO PAINT APPLICATION
SLP Dougherty 5.10.01

** These examinations are not for a repair area. These UT examinations were requested by the responsible Engineer as the initial base line UT thickness readings for the defined augmented examinations in the drywell seal area. The drywell concrete to steel moisture barrier was in the process of being replaced and as a result, the lower 6" of steel containment to floor had the paint removed to clean metal in preparation for the seal replacement. The low points in the one-foot by one-foot grids typically occurred in the lower 6" areas. All low point thickness' identified are bounded by evaluation VYM 99/139 and are acceptable without further evaluations.
RC 10/n/01

Component Temperature: 75 F°

Examiner: Mark E Malia MARK E MALIA Level: II Date: 5-9-01
Examiner: Robert B. Bickbeck Robert B. Bickbeck Level: IIL Date: 5/9/01
Reviewer: SLP Dougherty Date: 5.10.01
** Cog. Engineer: Responsible Engineer Date: 5/11/01
ANII: Date: 5-11-01

Evaluation Required: ***
Yes (✓) No ( )

Form Number:
VYNEF8053.01
Page 1 of 1
NE 8053 Original
LPC # 1

Experience Hours Credit: _____

*** See explanation provided above. Accept as is. Responsible Engineer 5/n/01

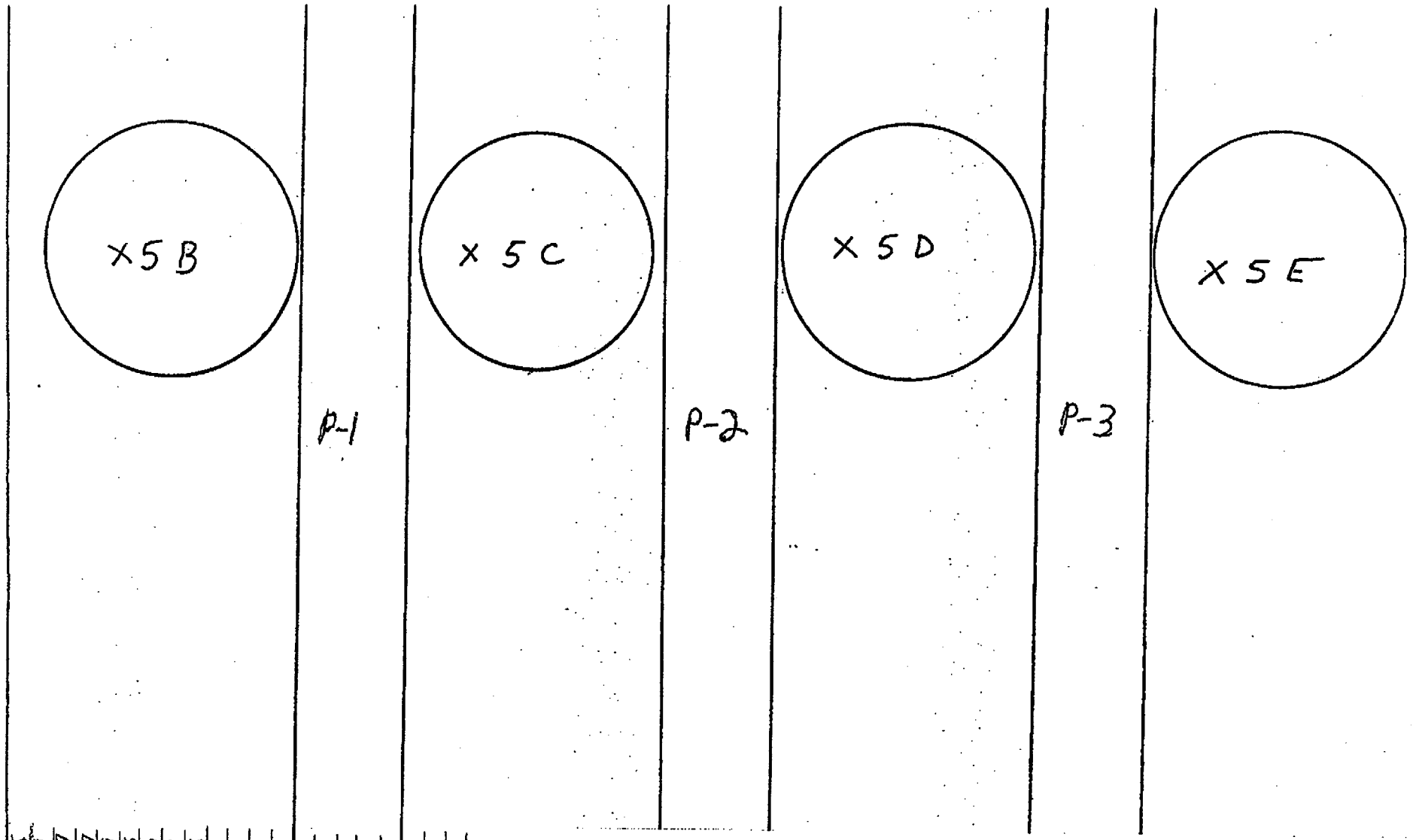

2.525	1.001	2.498
2.531	1.001	2.491
2.517	0.997	2.490
2.527	0.976	
2.529	0.999	
2.528		
2.530		
2.537		
2.553		
2.551		
2.549		
2.549		
0.996		

DATA SHEET NO. 8053-01-064
PAGE 2 OF 2

Mark E Malia LV II 5/9/01

Todd B Bibbs LV III 5/9/01

REVIEW: [illegible] 5-10-01

[illegible] 5-11-01

Vermont Yankee
Visual Examination Report Form
VT-1, Containment Surfaces (IWE)

Data Sheet No: 8045-01-019

Work Order No.: 00-5037

Procedure No/Rev.: NE 8045 REV. 1

Page 1 of 6 Date: 5-9-01

Component

Component ID: PRIMARY CONTAINMENT

System: PRIMARY CONTAINMENT SEAL INTERFACE AREA ELEV. 238'

Drawing No/Rev.: 6202-2

Visual Aids			Illumination Level Check		
☐ Mirror	■ Illumination Card/No. VY 8			Time	Date
■ Light Source (Describe) FLASHLIGHT	■ Other: V-WAC GUAGE DEARMAN GUAGE		Initial 243 FC	9:10 AM	5-9-01
Method	Photo	Sketch	Intermediate 198 FC	11:00 AM	5-9-01
■ Direct	☐ None	☐ None	Intermediate 177 FC	1:30 PM	5-9-01
☐ Remote	■ Attached	■ Attached	Final 96 FC	4:00 PM	5-9-01

Remote Examination Conditions/Equipment Remarks

LIGHT METER NO.: 812153
DUE: 4-13-02

	Acceptable	Recordable	N/A	Remarks/Observations
Cracks/Linears	J.E. 5-9-01			SEE ATTACHED PAGES 2 thru
Physical Damage	J.E. 5-9-01			6.
Corrosion			J.E. 5-9-01	EXAM CATAGORY E-C.
Erosion	J.E. 5-9-01			AUGMENTED EXAM.
Gouges	J.E. 5-9-01			EXAMS PERFORMED AFTER
Wear			J.E. 5-9-01	NEEDLE GUNNING AND
Arc Strikes			J.E. 5-9-01	SAND BLASTING. 0° thru 360°
Other (Explain)			J.E. 5-9-01	Jed El-Hajj II 5-9-01

Examiner: Jed El-Hajj Level: II Date: 5-9-01

Examiner: N/A Level: N/A Date: N/A

Reviewer: Rafe Cornell Responsible Engineer Date: 5/11/01

Reviewer: N/A Date: N/A

ANII: [signature] Date: 5-11-01

Evaluation Required?

☒ Yes ☐ No

See attached Evaluation LC 10/11/01

Vermont Yankee
Visual Examination
Supplemental Report Form

Reference Data Sheet No: 8045-01-019
Page 2 of 6 Date: 5-9-01

Component ID: PRIMARY CONTAINMENT Component System: SEAL INTERFACE AREA ELEV. 238' PRIMARY CONTAINMENT

SCOPE OF INSPECTION: SEAL INTERFACE AREA.
THE FOLLOWING AREAS OF PITTING WAS NOTED DURING INSPECTION.
THE PITTING NOTED IS LOCATED IN THE GROUT AREA.
2½" THICK PRIMARY CONTAINMENT LINER PLATE BELOW X-5A EXHIBITS 60% OF GROUT AREA PITTED, WITH 40% OF PITTS TOUCHING.
1" THICK PRIMARY CONTAINMENT LINER PLATE BETWEEN X-5A AND X-5B EXHIBITS 70% OF GROUT AREA PITTED, WITH 80% OF PITTS TOUCHING.
2½" THICK PRIMARY CONTAINMENT LINER PLATE BELOW X-5B EXHIBITS 80% OF GROUT AREA PITTED, WITH 60% OF PITTS TOUCHING.
1" THICK PRIMARY CONTAINMENT LINER PLATE BETWEEN X-5B AND X-5C EXHIBITS 80% OF GROUT AREA PITTED, WITH 80% OF PITTS TOUCHING.
2½" THICK PRIMARY CONTAINMENT LINER PLATE BELOW X-5C EXHIBITS 60% OF GROUT AREA PITTED, WITH 70% OF PITTS TOUCHING.
1" THICK PRIMARY CONTAINMENT LINER PLATE BETWEEN X-5C AND X-5D EXHIBITS 70% OF GROUT AREA PITTED, WITH 70% OF PITTS TOUCHING.
2½" THICK PRIMARY CONTAINMENT LINER PLATE BELOW X-5D EXHIBITS 20% OF GROUT AREA PITTED, WITH 80% OF PITTS TOUCHING.
1" THICK PRIMARY CONTAINMENT LINER PLATE BETWEEN X-5D AND X-5E EXHIBITS 50% OF GROUT AREA PITTED, WITH 80% OF PITTS TOUCHING.
2½" THICK PRIMARY CONTAINMENT LINER PLATE BELOW X-5E EXHIBITS 80% OF GROUT AREA PITTED, WITH 70% OF PITTS TOUCHING.

Examiner: Ted El-Hajj Level: II Date: 5-9-01
Examiner: N/A Level: N/A Date: N/A
Reviewer: [signature] Date: 5/11/01
Reviewer: N/A Date: N/A
ANII: [signature] Date: 5-11-01

Vermont Yankee

Visual Examination

Supplemental Report Form

Reference Data Sheet No: 8045-01-019

Page 3 of 6 Date: 5-9-01

Component ID: PRIMARY CONTAINMENT

Component: SEAL INTERFACE AREA ELEV. 238'

System: PRIMARY CONTAINMENT

1" THICK PRIMARY CONTAINMENT LINER PLATE BETWEEN X-5E AND X-5F EXHIBITS 80% of GROUT AREA PITTED, WITH 80% of PITTS TOUCHING.
2½" THICK PRIMARY CONTAINMENT LINER PLATE BELOW X-5F EXHIBITS 50% of GROUT AREA PITTED, WITH 40% of PITTS TOUCHING.
1" THICK PRIMARY CONTAINMENT LINER PLATE BETWEEN X-5F AND X-5G EXHIBITS 40% of GROUT AREA PITTED, WITH 20% of PITTS TOUCHING.
2½" THICK PRIMARY CONTAINMENT LINER PLATE BELOW X-5G EXHIBITS 70% of GROUT AREA PITTED, WITH 80% of PITTS TOUCHING.
1" THICK PRIMARY CONTAINMENT LINER PLATE BETWEEN X-5G AND X-5H EXHIBITS 60% of GROUT AREA PITTED, WITH 40% of PITTS TOUCHING.
2½" THICK PRIMARY CONTAINMENT LINER PLATE BELOW X-5H EXHIBITS 20% of GROUT AREA PITTED, WITH 50% of PITTS TOUCHING.
1" THICK PRIMARY CONTAINMENT LINER PLATE BETWEEN X-5H AND X-5A EXHIBITS 70% of GROUT AREA PITTED, WITH 50% of PITTS TOUCHING.
THE ABOVE FINDINGS WERE NOTED AFTER NEEDLE GUNNING AND SAND BLASTING. PITTS RANGED IN SIZE FROM PIN HEADS THROUGH SEVERAL FEET OF SURFACE WASTAGE.
NONE of THE ABOVE VIOLATED 10% MATERIAL THICKNESS. PAGE 4 of REPORT, DOCUMENTS DEEPEST PITT SIZE.
SEE PAGE 5 of REPORT FOR AREA OF CONCRETE BROKEN BELOW GROUT AREA.
SEE PAGE 6 of REPORT FOR AREA of PRIMARY CONTAINMENT WITH CORROSION WASTAGE BELOW FLOOR SURFACE.
AREA Referred to in this Report as "GROUT AREA" is the AREA AT the JOINT SEAL Interface.

Examiner: Ted El-Hajj. Level: II Date: 5-9-01

Examiner: N/A Level: N/A Date: N/A

Reviewer: [signature] Date: ~~10/11/01~~ 5/11/01

Reviewer: N/A Date: N/A

ANII: [signature] Date: 5-11-01

REFERENCE DATA SHEET NO. 8045-01-019
PAGE 4 OF 6 DATE 5-9-01

SCOPE OF THIS INSPECTION: DOCUMENT THE DEEPEST PITT LOCATED IN THE SANDBLASTED AREA. 360°
PLEASE NOTE BELOW DIMENSIONS OF THE DEEPEST PITTS ON $2\frac{1}{2}$" AND 1" THICK PLATES.
NONE OF THESE AREAS VIOLATE 10% OF PLATE WALL THICKNESS.
VERIFIED USING V-WAC AND DEARMAN UNDERCUT GUAGE.
NOTE: $\frac{3}{32}$" DEEP PITT ON 1" PLATE BETWEEN X-5H AND X-5A IS NOT OVERLAPPED BY OTHER PITTS.
Jed El-Hajj. II 5-9-01

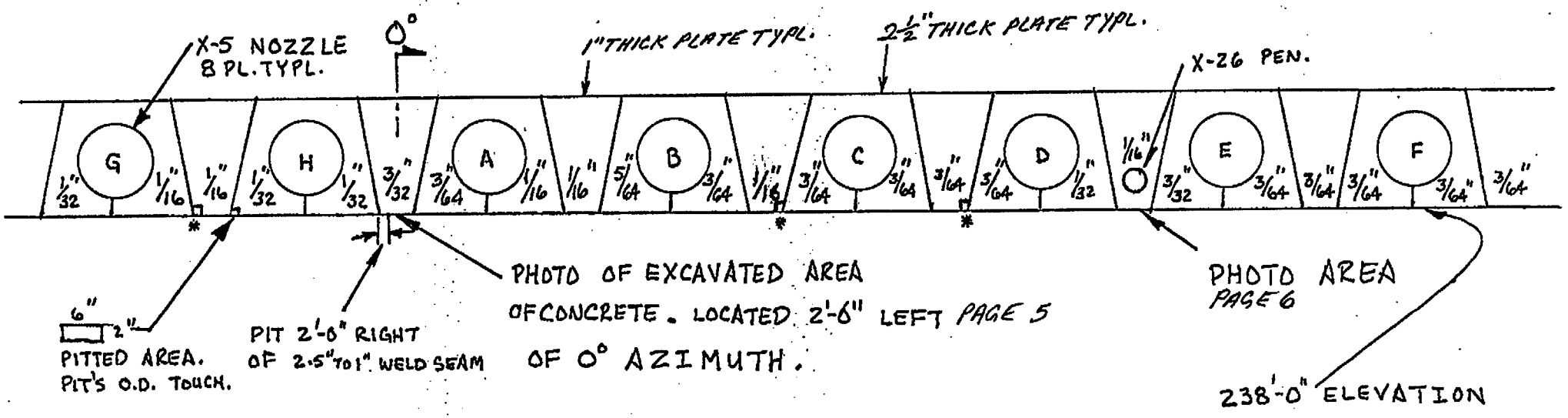

* PREVIOUS UT DATA AREAS

ELEV. VIEW FROM INSIDE

REFERENCE DATA SHEET NO. 8045-01-019
PAGE 5 OF 6 DATE 5-9-01

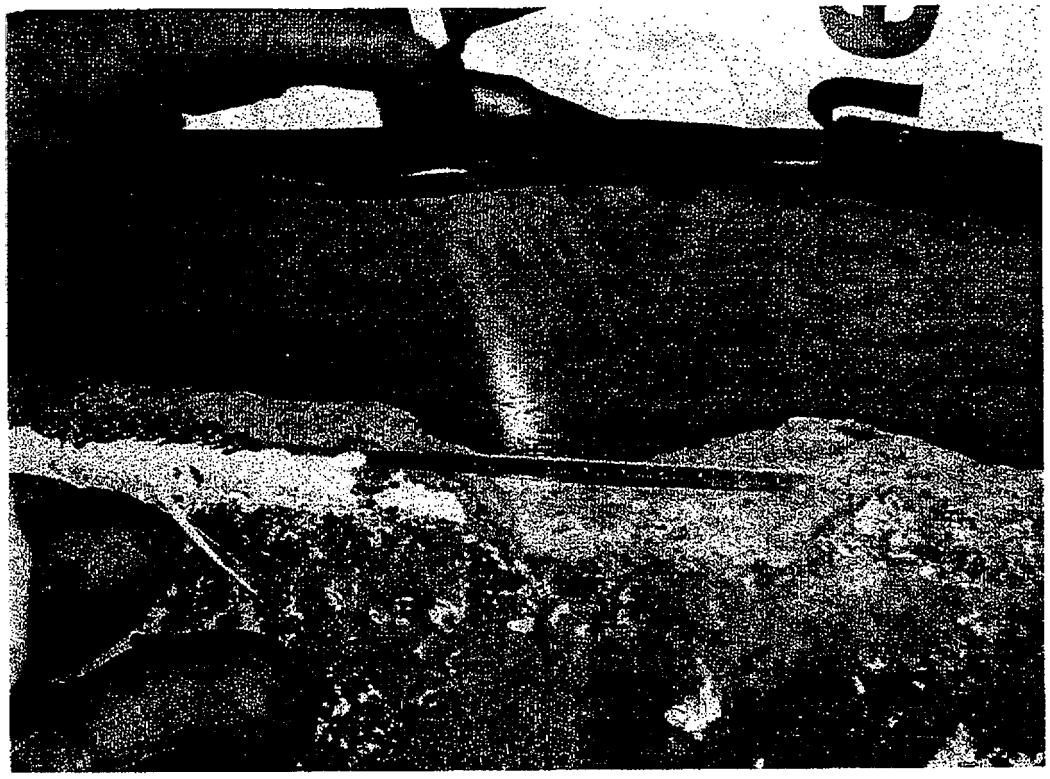

AREA LOCATED 2'6" LEFT OF 0°

NO PITTS IN THIS AREA EXCEEDED 10% OF WALL THICKNESS.

TOTAL AREA REVEALED LESS PITTING THE FUTHER DOWN FROM GROUT BELT.

Jed El-Hajj. 5-9-01 Level II

W3 Schlow ANII 5-11-01

AREA LOCATED BELOW X-26 PENETRATION ON RIGHT

UNABLE TO USE V-WAC OR DEARMAN UNDERCUT GUAGE IN THIS AREA. USED 1/32" THICK PLASTIC SHIM, WHICH FILLED AREA, FLUSH. NOT BELOW MINIMUM WALL.

Ted El-Hajj. LEVEL II 5-9-01

W Schiller ANII 5-11-01

EVALUATION OF DATA PROVIDED BY VT-1, CONTAINMENT SURFACES (IWE)
DATA SHEET No: 8045-01-019

During RFO 21 IWE examinations it was discovered that the Joint Seal at the concrete to steel interface on the 238' level of the containment had failed and there was evidence of corrosion in areas of the seal. As a result a portion of the circumference of the seal interface area was declared as augmented. The joint seal itself was also scheduled for replacement during RFO-22.

At the start of RFO-22 the examiners performed the required VT-1 examinations of the augmented area at the joint seal to determine if any changes had occurred during the last operating cycle. The results of that examination reveal no changes identified in the augmented area.

After the VT-1 examinations were complete the process began for the joint seal replacement. A band of paint was removed from the concrete floor up the steel containment approximately 6" wide for the full circumference. The recessed area for the joint seal was also cleaned in preparation for the new seal installation. At this point a VT-3 examinations was performed which identified a band of pitting that covered much of the 360-degree circumference. A more detailed VT-1 was ordered by the Responsible Engineer to detail this area prior to paint/seal installation.

This joint seal area was identified as an issue in the early 1990's. (ER-99-1594 deals with the issues from the 1990's resolution.). In 1993 the joint seal area was cleaned and painted so as to form a paint joint seal at the concrete to seal interface. The areas identified during the RFO-21 examinations were areas that were experiencing evidence of corrosion and paint loss in this painted joint area. Some of the paint was still intact and providing adequate protection for the steel it was covering.

The new areas of pitting in the area of the joint seal are as a result of the coating removal to white metal in this area. This area was not previously identified during RFO-21 because it was an old area of pitting that had been covered by the 1993 coating and had not experienced any further degradation. As a result of the coatings being completely removed from this joint area, this VT-1 examination was able to map this region without the impedance of any obstruction.

The areas of pitting are isolated to the general area of the joint seal interface between the concrete and the steel. The pitting subsides as it move up or down out of the joint seal area. This was evident when a portion of the steel surface was exposed as a result of the removal of a concrete chip. The under surface area exposed was approximately 9" wide and 3" deep in a crescent shape. The worst case pitting is isolated to a band in the joint seal area from approximately ¼" wide to approximately 1" wide and is described in the report as areas with general wastage and connected pitting. All corrosion identified within this report is bounded by evaluation VYM 99/139. Based on this evaluation all areas are well within the required design base metal thicknesses and are acceptable for continued operation as is.

Ralph Connell
IWE Responsible Engineer
May 11, 2001

Data Sheet No: 8047-01-079

Work Order No.: 00-005037-000

Procedure No/Rev.: NE8047 LPC no. 1

Page 1 of 1 Date: 5-14-01

Vermont Yankee
Visual Examination Report Form for VT-3 Moisture Barriers, Gaskets and Seals (IWE)

Component ID: PRIMARY CONTAINMENT SEAL INTERFACE AREA ELEV. 238' Component

Drawing No/Rev.: 6202-2

Visual Aids	Illumination Level Check			Photo/Sketch
☐ Magnifier ■ Light Source (Describe) FLASHLIGHT		Time	Date	■ None
☐ Mirror ■ Other: LIGHT METER NO. 812153 DUE 4-13-02	Initial 158 FC	7:40 AM	5-14-01	
	Intermediate	N/A	N/A	
	Intermediate	N/A	N/A	☐ Attached
■ Illumination Card/Number VY8	Final 135 FC	8:45 AM	5-14-01	

	Acceptable	Recordable	N/A	Remarks
Deformation	J.E. 5-14-01			SCOPE OF INSP. CATAGORY
Cracking	J.E. 5-14-01			EA, and EB. NEW
Discoloration	J.E. 5-14-01			PAINT, NEW SEAL ON
Wear	J.E. 5-14-01			REFURBISHED SEAL/
Erosion	J.E. 5-14-01			MOISTURE BARRIER
Corrosion	J.E. 5-14-01			AREA. J.E. 5-14-01
Tears	J.E. 5-14-01			
Gaps/Missing Sections	J.E. 5-14-01			
Pitting		①	J.E. 5-14-01	① PREVIOUSLY ADDRESSED
Gouges		①	J.E. 5-14-01	ON REPORT NO. 8045-01-
Dents		①	J.E. 5-14-01	019. J.E. 5-14-01
Other (Describe):			J.E. 5-14-01	

Examiner: Ted El-Hajj Level II Date 5-14-01

Examiner: N/A Level N/A Date N/A

Reviewer: [signature] Date 5/14/01

Reviewer: N/A Date N/A

ANII: [signature] Date 5-14-01

Evaluation Required? ☐ Yes ■ No

Data Sheet No: 8047-01-073 (~~02~~ RBS-10-01)

Work Order No.: 00-005037-000

Procedure No/Rev.: NE 8047 Rev. 0

Page 1 of 1 Date: 5-9-01

Vermont Yankee
Visual Examination Report Form for VT-3 Containment Surfaces (IWE)

Component: SEAL INTERFACE AREA ELEV. 238'

Component ID: PRIMARY CONTAINMENT

Drawing No/Rev.: 6202-2 R/0

Visual Aids	Illumination Level Check			Photo/Sketch
☐ Binoculars ■ Light Source (Describe) FLASHLIGHT		Time	Date	■ None
	Initial 179 FC	7:30 AM	5-9-01	
☐ Mirror ■ Other: LIGHT METER NO. 812153 DUE - 4-13-02	Intermediate	N/A	N/A	
	Intermediate	N/A	N/A	☐ Attached
■ Illumination Card/Number VY 8	Final 143 FC	8:45 AM	5-9-01	

Coated Surface? ☐ Yes ■ No	Acceptable	Recordable	N/A	Remarks
Cracking	J.E. 5-9-01			SCOPE OF INSP.: SEAL
Flaking			J.E. 5-9-01	INTERFACE AREA. GROUT
Blistering			J.E. 5-9-01	HAS BEEN REMOVED AND
Peeling			J.E. 5-9-01	AREA SAND BLASTED to
Wear	J.E. 5-9-01			CLEAN METAL.
Discoloration			J.E. 5-9-01	PITTING EXISTS BELOW
Pitting		J.E. 5-9-01		AND WHERE GROUT
Corrosion	J.E. 5-9-01			PREVIOUSLY INTERFACED
Arc Strikes	J.E. 5-9-01			WITH PRIMARY CONTAIN-
Gouges	J.E. 5-9-01			MENT. PITTING depth is
Dents	J.E. 5-9-01			indeterminate. Request
Deformation	J.E. 5-9-01			Engineering Evaluation.
Other (Describe):			J.E. 5-9-01	

Examiner: Ted El-Hajj Level II Date 5-9-01

Examiner: N/A Level N/A Date N/A

** Reviewer: [signature] Date 5/11/01

Reviewer: N/A Date N/A

ANII: [signature] Date 5-11-01

Evaluation Required? ☐ Yes ☒ No

See below

** The information provided is not detailed enough. VT-1 exams of this Area have been requested and will document the areas of pitting for review.

Vermont Yankee
Visual Examination Report Form for General Visual (IWE)

Data Sheet No: IWE-GV-353

Work Order No.: 00-05035

Procedure No/Rev.: NE 8047/original

Page 1 of 1 Date: 10/16/00

Component

Component ID: Torus Bays 1-4 System: Containment

Drawing No/Rev.: 5920-42 R13 Location: Rx Bldg

Visual Aids	Photo	Sketch	Method
☐ Binoculars	☑ None	☑ None	☑ Direct
☐ Mirror	☐ Attached	☐ Attached	☐ Remote
☑ Light Source	Examination Location Description/Remarks	Remote Examination Conditions/Equipment Remarks	
☐ 6" Scale	Examination is from Catwalk down to Belt Line on outer Exterior Surface	N/A	
☐ Other			

Examination Results, Details and Comments:

Performed General Visual Examination of Torus Bays 1,2,3 + 4 from catwalk to belt line on exterior outer surface of Torus. The results are satisfactory.

Examiner: [signature] Level Responsible Engineer Date 10/16/00

Examiner: Level Date

Reviewer: Date

Reviewer: [signature] Date 10/16/00

ANII: [signature] Date 10/19/00

Data Sheet No: IWE - 6V - 354

Work Order No.: 00 - 05035

Procedure No/Rev.: NE 8047/original

Page 1 of 1 Date: 10/16/00

Vermont Yankee
Visual Examination Report Form for General Visual (IWE)

Component

Component ID: Torus Bays 5-8 System: Containment

Drawing No/Rev.: 5920-42 R13 Location: Rx Bldg

Visual Aids	Photo	Sketch	Method
☐ Binoculars	☑ None	☑ None	☑ Direct
☐ Mirror	☐ Attached	☐ Attached	☐ Remote
☑ Light Source	Examination Location Description/Remarks	Remote Examination Conditions/Equipment Remarks	
☐ 6" Scale	Examination is From Catwalk down to Belt Line on outer Exterior Surface	N/A	
☐ Other			

Examination Results, Details and Comments:

Performed General Visual Examination of Torus Bays 5, 6, 7 + 8 from catwalk to belt line on exterior outer surface of Torus. The results are satisfactory.

Examiner: [signature] Level Responsible Engineer Date 10/16/00

Examiner: Level Date

Reviewer: Date

Reviewer: [signature] Date 10/16/00

ANII: [signature] Date 10-19-00

Data Sheet No: IWE-GV-355

Work Order No.: 00-05035

Procedure No/Rev.: NE 8047/original

Page 1 of 1 Date: 10/16/00

Vermont Yankee
Visual Examination Report Form for General Visual (IWE)

Component

Component ID: Torus Bays 9-12 System: Containment

Drawing No/Rev.: 5920-42 R13 Location: Rx Bldg

Visual Aids	Photo	Sketch	Method
☐ Binoculars	☑ None	☑ None	☑ Direct
☐ Mirror	☐ Attached	☐ Attached	☐ Remote
☑ Light Source	Examination Location Description/Remarks	Remote Examination Conditions/Equipment Remarks	
☐ 6" Scale	Examination is from Catwalk down to Belt Line on outer Exterior Surface	N/A	
☐ Other			

Examination Results, Details and Comments:

Performed General Visual Examination of Torus Bays 9, 10, 11 + 12 from catwalk to belt line on exterior outer surface of Torus. The results are satisfactory.

Examiner: [signature] Level Responsible Engineer Date 10/16/00

Examiner: Level Date

Reviewer: Date

Reviewer: [signature] Date 10/16/00

ANII: [signature] Date 10-19-00

Data Sheet No: IWE-GV-356

Work Order No.: 00-05035

Procedure No/Rev.: NE 8047/original

Page 1 of 1 Date: 10/16/00

Vermont Yankee
Visual Examination Report Form for General Visual (IWE)

Component

Component ID: Torus Bays 13-16 System: Containment

Drawing No/Rev.: 5920-42 R13 Location: Rx Bldg

Visual Aids	Photo	Sketch	Method
☐ Binoculars	☑ None	☑ None	☑ Direct
☐ Mirror	☐ Attached	☐ Attached	☐ Remote
☑ Light Source	Examination Location Description/Remarks	Remote Examination Conditions/Equipment Remarks	
☐ 6" Scale	Examination is from Catwalk down to Belt Line on outer Exterior Surface	N/A	
☐ Other			

Examination Results, Details and Comments:

Performed General Visual Examination of Torus Bays 13, 14, 15 + 16 from catwalk to belt line on exterior outer surface of Torus. The results are satisfactory.

Examiner: Ralph Cannell Level Responsible Engineer Date 10/16/00

Examiner: Level Date

Reviewer: Date

Reviewer: Ralph Cannell Date 10/16/00

ANII: [illegible] Date 10-19-00

Data Sheet No: IWE-GV-357

Work Order No.: 00-05035

Procedure No/Rev.: NE 8047/original

Page 1 of 1 Date: 10/16/00

Vermont Yankee
Visual Examination Report Form for General Visual (IWE)

Component

Component ID: Torus Penetration X 209 A+D System: Containment

Drawing No/Rev.: 5920-42 R13 Location: Rx Building

Visual Aids	Photo	Sketch	Method
☐ Binoculars	☑ None	☑ None	☑ Direct
☐ Mirror	☐ Attached	☐ Attached	☐ Remote
☑ Light Source	Examination Location Description/Remarks	Remote Examination Conditions/Equipment Remarks	
☐ 6" Scale	Exterior Surface of Penetration X209 A+D	N/A	
☐ Other			

Examination Results, Details and Comments:

Performed General Visual Examination on X209 A and D with Satisfactory Results.

Examiner: Ralph Connell Level Responsible Engineer Date 10/16/00

Examiner: Level Date

Reviewer: Date

Reviewer: Ralph Connell Date 10/16/00

ANII: [illegible] Date 10-19-00

Data Sheet No: IWE-GV-358

Work Order No.: 00-05035

Procedure No/Rev.: NE 8047/original

Page 1 of 1 Date: 10/16/00

Vermont Yankee
Visual Examination Report Form for General Visual (IWE)

Component

Component ID: Torus Penetration X231 A,C, + E System: Containment

Drawing No/Rev.: 5920-42 R13 and 6202-2D Location: Rx Building

Visual Aids	Photo	Sketch	Method
☐ Binoculars	☑ None	☑ None	☑ Direct
☐ Mirror	☐ Attached	☐ Attached	☐ Remote
☑ Light Source	Examination Location Description/Remarks		Remote Examination Conditions/Equipment Remarks
☐ 6" Scale	Exterior Surface of Penetration X231 A,C, + E		N/A
☐ Other			

Examination Results, Details and Comments:

Performed General Visual Examinations on X231 A, C, and E with satisfactory Results. Note. 5920-42 R13 not revised yet to reflect X231 penetrations.

Examiner: [signature] Level Responsible Engineer Date 10/16/00

Examiner: Level Date

Reviewer: Date

Reviewer: [signature] Date 10/16/00

ANII: [signature] Date 10.19.00

Data Sheet No: IWE-GV-359

Work Order No.: 00-05035

Procedure No/Rev.: NE 8047/original

Page 1 of 1 Date: 10/16/00

Vermont Yankee
Visual Examination Report Form for General Visual (IWE)

Component

Component ID: Torus Penetration X206 A + D System: Containment

Drawing No/Rev.: 5920-42 R13 Location: Rx Building

Visual Aids	Photo	Sketch	Method
☐ Binoculars	☑ None	☑ None	☑ Direct
☐ Mirror	☐ Attached	☐ Attached	☐ Remote
☑ Light Source	Examination Location Description/Remarks	Remote Examination Conditions/Equipment Remarks	
☐ 6" Scale	Exterior Surface of Penetration X 206 A + D	N/A	
☐ Other			

Examination Results, Details and Comments:

Performed General Visual Examination on X206 A and D with satisfactory Results.

Examiner: [signature] Level Responsible Engineer Date 10/16/00

Examiner: Level Date

Reviewer: Date

Reviewer: [signature] Date 10/16/00

ANII: [signature] Date 10/19/00

Vermont Yankee
Visual Examination Report Form
VT-1, Bolting (IWE)

Data Sheet No: 8045-01-01
Work Order No.: 00-005035-00
Procedure No/Rev.: NE 8045 R/0
Page 1 of 1 Date: 4.19.01

Component

Component ID: V16-19-5A System: PCAC

Drawing No/Rev.: G-191175 Sh. 1 R/63 Bolting Length: N/A " Bolting Diameter: N/A "

Photo/Sketch	Method	Examination	Bolting Components Examined	
☑ None	☑ Direct	☑ In Place	☑ Bolting	☐ Washers
☐ Attached	☐ Remote	☐ Removed	☐ Bushings	☐ Flange Surface

Visual Aids

☐ Magnifying Glass ☑ Illumination Card/No.: V4-5
☑ Mirror ☑ Light Source (Describe): PELICAN LIGHT

Remote Examination Conditions/Limitations: N/A

Illumination Level Check

	Time	Date
Initial	12:20	4.19.01
Intermediate	N/A	N/A
Intermediate	N/A	N/A
Final	13:45	4.19.01

Lightmeter S/N: 4593804
Cal. Due Date: 4.13.02

	Acceptable	Recordable	N/A	Remarks/Observations
Loose/Missing	✓	N/A	N/A	N/A
Thread Engagement	✓			
Thread Damage	✓			
Galling	✓			
Coating Degradation	✓			
Bent/Twisted	✓			
Physical Damage	✓			
Fractured Parts	✓			
Gouges	✓			
Cracks/Linears	✓			
Corrosion	✓			
Erosion	✓			
Wear	✓			
Evidence of Leakage	✓			
Other (Explain)	N/A	N/A	✓	

Examiner: [signature] Level: III Date: 4.19.01
Examiner: N/A Level: N/A Date: N/A
Reviewer: [signature] Date: 4/24/01
Reviewer: Date:
ANII: [signature] Date: 4-24-01

Evaluation Required?
☐ Yes ☑ No

Vermont Yankee
Visual Examination Report Form
VT-1, Bolting (IWE)

Data Sheet No: 8045-01-02
Work Order No.: 00-005035-00
Procedure No/Rev.: NE 8045 R/0
Page 1 of 1 Date: 4·19·01

Component

Component ID: V16-19-5B System: PCAC

Drawing No/Rev.: G-191175 Sh. 1 R/63 Bolting Length: N/A " Bolting Diameter: N/A "

Photo/Sketch	Method	Examination	Bolting Components Examined	
☑ None	☑ Direct	☑ In Place	☑ Bolting	☐ Washers
☐ Attached	☐ Remote	☐ Removed	☐ Bushings	☐ Flange Surface

Visual Aids

☐ Magnifying Glass ☑ Illumination Card/No.: V4-5
☑ Mirror ☑ Light Source (Describe): PELICAN LIGHT

Remote Examination Conditions/Limitations: N/A

Illumination Level Check	Time	Date
Initial	12:20	4·19·01
Intermediate	N/A	N/A
Intermediate	N/A	N/A
Final	13:45	4·19·01

Lightmeter S/N: 4593804
Cal. Due Date: 4·13·02

	Acceptable	Recordable	N/A	Remarks/Observations
Loose/Missing	✓	N/A	N/A	N/A
Thread Engagement	✓			
Thread Damage	✓			
Galling	✓			
Coating Degradation	✓			
Bent/Twisted	✓			
Physical Damage	✓			
Fractured Parts	✓			
Gouges	✓			
Cracks/Linears	✓			
Corrosion	✓			
Erosion	✓			
Wear	✓			
Evidence of Leakage	✓			
Other (Explain)	N/A	N/A	✓	

Examiner: [signature] Level: III Date: 4·19·01
Examiner: N/A Level: N/A Date: N/A
Reviewer: [signature] Date: 4/24/01
Reviewer: Date:
ANII: [signature] Date: 4-24-01

Evaluation Required?
☐ Yes ☑ No

Vermont Yankee
Visual Examination Report Form
VT-1, Bolting (IWE)

Data Sheet No: (V16-19-5C) 8045-01-03
Work Order No.: 00-005035-00
Procedure No/Rev.: NE 8045 R/0
Page 1 of 1 Date: 4·19·01

Component

Component ID: V16-19-5C System: PCAC

Drawing No/Rev.: G-191175 Sh. 1 R/63 Bolting Length: N/A " Bolting Diameter: N/A "

Photo/Sketch	Method	Examination	Bolting Components Examined	
☑ None	☑ Direct	☑ In Place	☑ Bolting	☐ Washers
☐ Attached	☐ Remote	☐ Removed	☐ Bushings	☐ Flange Surface

Visual Aids

☐ Magnifying Glass ☑ Illumination Card/No.: V4-5
☑ Mirror ☑ Light Source (Describe): PELICAN LIGHT

Remote Examination Conditions/Limitations: N/A

Illumination Level Check	Time	Date
Initial	12:20	4·19·01
Intermediate	N/A	N/A
Intermediate	N/A	N/A
Final	13:45	4·19·01

Lightmeter S/N: 2593804
Cal. Due Date: 4·13·02

	Acceptable	Recordable	N/A	Remarks/Observations
Loose/Missing	✓	N/A	N/A	N/A
Thread Engagement	✓			
Thread Damage	✓			
Galling	✓			
Coating Degradation	✓			
Bent/Twisted	✓			
Physical Damage	✓			
Fractured Parts	✓			
Gouges	✓			
Cracks/Linears	✓			
Corrosion	✓			
Erosion	✓			
Wear	✓			
Evidence of Leakage	✓			
Other (Explain)	N/A	N/A	✓	

Examiner: [signature] Level: III Date: 4·19·01
Examiner: N/A Level: N/A Date: N/A
Reviewer: [signature] Date: 4/24/01
Reviewer: Date:
ANII: [signature] Date: 4-24-01

Evaluation Required?
☐ Yes ☑ No

Vermont Yankee
Visual Examination Report Form
VT-1, Bolting (IWE)

Data Sheet No: 8045-01-04
Work Order No.: 00-005035-00
Procedure No/Rev.: NE 8045 R10
Page 1 of 1 Date: 4·19·01

Component

Component ID: V16-19-5D System: PCAC

Drawing No/Rev.: G-191175 Sh. 1 R63 Bolting Length: N/A " Bolting Diameter: N/A "

Photo/Sketch	Method	Examination	Bolting Components Examined	
☑ None	☑ Direct	☑ In Place	☑ Bolting	☐ Washers
☐ Attached	☐ Remote	☐ Removed	☐ Bushings	☐ Flange Surface

Visual Aids

☐ Magnifying Glass ☑ Illumination Card/No.: V4-5
☑ Mirror ☑ Light Source (Describe): PELICAN LIGHT

Remote Examination Conditions/Limitations: N/A

Illumination Level Check	Time	Date
Initial	12:20	4·19·01
Intermediate	N/A	N/A
Intermediate	N/A	N/A
Final	13:45	4·19·01

Lightmeter S/N: 4593804
Cal. Due Date: 4·13·02

	Acceptable	Recordable	N/A	Remarks/Observations
Loose/Missing	✓	N/A	N/A	N/A
Thread Engagement	✓			
Thread Damage	✓			
Galling	✓			
Coating Degradation	✓			
Bent/Twisted	✓			
Physical Damage	✓			
Fractured Parts	✓			
Gouges	✓			
Cracks/Linears	✓			
Corrosion	✓			
Erosion	✓			
Wear	✓			
Evidence of Leakage	✓			
Other (Explain)	N/A	N/A	✓	

Examiner: [signature] Level: III Date: 4·19·01
Examiner: N/A Level: N/A Date: N/A
Reviewer: [signature] Date: 4/24/01
Reviewer: Date:
ANII: [signature] Date: 4-24-01

Evaluation Required? ☐ Yes ☑ No

Vermont Yankee
Visual Examination Report Form
VT-1, Bolting (IWE)

Data Sheet No: 8045-01-05
Work Order No.: 00-005035-00
Procedure No/Rev.: NE 8045 R/0
Page 1 of 1 Date: 4·19·01

Component

Component ID: V16-19-5E System: PCAC

Drawing No/Rev.: G-191175 Sh. 1 R/63 Bolting Length: N/A " Bolting Diameter: N/A "

Photo/Sketch	Method	Examination	Bolting Components Examined	
☑ None	☑ Direct	☑ In Place	☑ Bolting	☐ Washers
☐ Attached	☐ Remote	☐ Removed	☐ Bushings	☐ Flange Surface

Visual Aids

☐ Magnifying Glass ☑ Illumination Card/No.: V4-5
☑ Mirror ☑ Light Source (Describe): PELICAN LIGHT

Remote Examination Conditions/Limitations: N/A

Illumination Level Check	Time	Date
Initial	12:20	4·19·01
Intermediate	N/A	N/A
Intermediate	N/A	N/A
Final	13:45	4·19·01

Lightmeter S/N: 4593804
Cal. Due Date: 4·13·02

	Acceptable	Recordable	N/A	Remarks/Observations
Loose/Missing	✓	N/A	N/A	N/A
Thread Engagement	✓			
Thread Damage	✓			
Galling	✓			
Coating Degradation	✓			
Bent/Twisted	✓			
Physical Damage	✓			
Fractured Parts	✓			
Gouges	✓			
Cracks/Linears	✓			
Corrosion	✓			
Erosion	✓			
Wear	✓			
Evidence of Leakage	✓			
Other (Explain)	N/A	N/A	✓	

Examiner: [signature] Level: III Date: 4.19.01
Examiner: N/A Level: N/A Date: N/A
Reviewer: [signature] Date: 4/24/01
Reviewer: Date:
ANII: [signature] Date: 4-24-01

Evaluation Required?
☐ Yes ☑ No

Vermont Yankee
Visual Examination Report Form
VT-1, Bolting (IWE)

Data Sheet No: 8045-01-06
Work Order No.: 00-005035-00
Procedure No/Rev.: NE 8045 R/0
Page 1 of 1 Date: 4.19.01

Component

Component ID: V16-19-5F System: PCAC

Drawing No/Rev.: G-191175 Sh. 1 R/63 Bolting Length: N/A " Bolting Diameter: N/A "

Photo/Sketch	Method	Examination	Bolting Components Examined	
☑ None	☑ Direct	☑ In Place	☑ Bolting	☐ Washers
☐ Attached	☐ Remote	☐ Removed	☐ Bushings	☐ Flange Surface

Visual Aids

☐ Magnifying Glass ☑ Illumination Card/No.: V4-5
☑ Mirror ☑ Light Source (Describe): PELICAN LIGHT

Remote Examination Conditions/Limitations: N/A

Illumination Level Check

	Time	Date
Initial	12:20	4.19.01
Intermediate	N/A	N/A
Intermediate	N/A	N/A
Final	13:45	4.19.01

Lightmeter S/N: L593804
Cal. Due Date: 4.13.02

	Acceptable	Recordable	N/A	Remarks/Observations
Loose/Missing	✓	N/A	N/A	N/A
Thread Engagement	✓			
Thread Damage	✓			
Galling	✓			
Coating Degradation	✓			
Bent/Twisted	✓			
Physical Damage	✓			
Fractured Parts	✓			
Gouges	✓			
Cracks/Linears	✓			
Corrosion	✓			
Erosion	✓			
Wear	✓			
Evidence of Leakage	✓			
Other (Explain)	N/A	N/A	✓	

Examiner: [signature] Level: III Date: 4.19.01
Examiner: N/A Level: N/A Date: N/A
Reviewer: [signature] Date: 4/24/01
Reviewer: Date:
ANII: [signature] Date: 4-24-01

Evaluation Required?
☐ Yes ☑ No

Vermont Yankee
Visual Examination Report Form
VT-1, Bolting (IWE)

Data Sheet No: 8045-01-017
Work Order No.: 00-004108-000
Procedure No/Rev.: NE 8045 Rev. 1
Page 1 of 1 Date: 5-7-01

Component

Component ID: V16-19-5G VACUUM BREAKER VALVE System: PRIMARY CONTAINMENT

Drawing No/Rev.: 9-6202 Rev. 0 Bolting Length: STUDS APPX. 4 1/2" Bolting Diameter: 3/4"

Photo/Sketch	Method	Examination	Bolting Components Examined	
■ None	■ Direct	■ In Place	■ Bolting	☐ Washers
☐ Attached	☐ Remote	■ Removed	☐ Bushings	■ Flange Surface

Visual Aids

☐ Magnifying Glass ■ Illumination Card/No.: VY 8
■ Mirror ■ Light Source (Describe): Flashlight

Remote Examination Conditions/Limitations:

Illumination Level Check	Time	Date
Initial PRE 123 FC	1:45PM	5-7-01
Intermediate	N/A	N/A
Intermediate	N/A	N/A
Final POST 109 FC	2:30PM	5-7-01
Lightmeter S/N: 812153		
Cal. Due Date: 4-13-02		

	Acceptable	Recordable	N/A	Remarks/Observations
Loose/Missing	J.E. 5-7-01			Verified the following: 20-
Thread Engagement			J.E. 5-7-01	A-194 GR. 2H HHN. 20-3/4 Ø
Thread Damage	J.E. 5-7-01			studs screwed in place at
Galling	J.E. 5-7-01			time of inspection. Top HALF
Coating Degradation	J.E. 5-7-01		J.E. 5-7-01	inspected. Verified accessible
Bent/Twisted	J.E. 5-7-01			flange surface areas, less
Physical Damage	J.E. 5-7-01			threaded stud holes. 5-7-01
Fractured Parts	J.E. 5-7-01			Jed El-Hajj
Gouges	J.E. 5-7-01			
Cracks/Linears	J.E. 5-7-01			
Corrosion	J.E. 5-7-01			
Erosion	J.E. 5-7-01			
Wear	J.E. 5-7-01			
Evidence of Leakage	J.E. 5-7-01			
Other (Explain)			J.E. 5-7-01	

Examiner: Jed El-Hajj Level: II Date: 5-7-01
Examiner: N/A Level: N/A Date: N/A
Reviewer: [signature] Date: 5/8/01
Reviewer: N/A Date: N/A
ANII: [signature] Date: 5-8-01

Evaluation Required?
☐ Yes ■ No

Vermont Yankee
Visual Examination Report Form
VT-1, Bolting (IWE)

Data Sheet No: 8045-01-014
Work Order No.: 00-004109-000
Procedure No/Rev.: NE 8045 Rev. 1
Page 1 of 1 Date: 5-4-01

Component

Component ID: Valve V16-19-54 System: Torus Vacuum Breaker Ass'y.

Drawing No/Rev.: 9-6202 Rev. 0 Bolting Length: ~~APX.~~ STUDS 4½" Bolting Diameter: .750"

Photo/Sketch	Method	Examination	Bolting Components Examined	
■ None	■ Direct	■ In Place	■ Bolting	☐ Washers
☐ Attached	☐ Remote	■ Removed	☐ Bushings	■ Flange Surface

Visual Aids

☐ Magnifying Glass ■ Illumination Card/No.: VY8
■ Mirror ■ Light Source (Describe): Flashlight

Remote Examination Conditions/Limitations:

Illumination Level Check	Time	Date
Initial PRE 133FC	3:01PM	5-4-01
Intermediate	N/A	N/A
Intermediate	N/A	N/A
Final POST 117FC	4:47PM	5-4-01

Lightmeter S/N: 812153
Cal. Due Date: 4-13-02

	Acceptable	Recordable	N/A	Remarks/Observations
Loose/Missing	J.E. 5-4-01			Verified the following: 20-A-194 GR. 2H HHD. 20-¾"Ø
Thread Engagement			J.E. 5-4-01	studs screwed in place at
Thread Damage	J.E. 5-4-01			time of inspection. Top Half
Galling	J.E. 5-4-01			inspected. Verified accessible
Coating Degradation			J.E. 5-4-01	flange surface areas, less
Bent/Twisted	J.E. 5-4-01			threaded stud holes. 5-4-01
Physical Damage	J.E. 5-4-01			Jed El-Hajj.
Fractured Parts	J.E. 5-4-01			
Gouges	J.E. 5-4-01			
Cracks/Linears	J.E. 5-4-01			
Corrosion	J.E. 5-4-01			
Erosion	J.E. 5-4-01			
Wear	J.E. 5-4-01			
Evidence of Leakage	J.E. 5-4-01			
Other (Explain)			J.E. 5-4-01	

Examiner: Jed El-Hajj Level: II Date: 5-4-01
Examiner: N/A Level: N/A Date: N/A
Reviewer: [signature] Date: 5/5/01
Reviewer: N/A Date: N/A
ANII: [signature] Date: 5-5-01

Evaluation Required?
☐ Yes ☒ No

Data Sheet No: IWE-GV-398

Work Order No.: 00-005035

Procedure No/Rev.: PP 7024/0

Page 1 of 1 Date: 1/16/01

Vermont Yankee
Visual Examination Report Form for General Visual (IWE)

Component

Component ID: Vent System System: Torus

Drawing No/Rev.: 6202-200 Location: Exterior Surfaces

Visual Aids	Photo	Sketch	Method
☒ Binoculars	☒ None	☒ None	☒ Direct General
☐ Mirror	☐ Attached	☐ Attached	☐ Remote
☒ Light Source	Examination Location Description/Remarks		Remote Examination Conditions/Equipment Remarks
☐ 6" Scale	Vent Lines & Vacuum Breaker Lines for: Torus Bays 2, 4, 6, 8, 10, 12, 14, 16		N/A
☐ Other			

Examination Results, Details and Comments:

Performed General Visual Examination on external surfaces of all Vent lines from X-5 Pen to Torus and all Vacuum Breaker Lines from Torus to Vent line Penetrations with No Findings. Satisfactory.

Examiner: Ralph Connell Level Responsible Engineer Date 1/16/01

Examiner: N/A Level N/A Date N/A

Reviewer: N/A Date N/A

Reviewer: N/A Date N/A

ANII: [illegible] Date 1-31-01

Data Sheet No: 8047-01-031

Work Order No.: 00-5037

Procedure No/Rev.: 8047 R0

Page 1 of 9 Date: 5/1/01

Vermont Yankee
Visual Examination Report Form for General Visual (IWE)

Component

Component ID: Vent Header System: Drywell

Drawing No/Rev.: 6202-200 Location: Drywell

Visual Aids	Photo	Sketch	Method
☐ Binoculars	☒ None	☐ None 8 pages	☒ Direct General
☐ Mirror	☐ Attached	☒ Attached	☐ Remote
☒ Light Source	Examination Location Description/Remarks	Remote Examination Conditions/Equipment Remarks	
☐ 6" Scale	Interior surface of Vent Header	N/A	
☐ Other			

Examination Results, Details and Comments:

This General Visual examination identified areas of pitting corrosion and general corrosion. The affected areas are identified on the attached drawings, pages 2-9. All areas with pitting ≥ .025" require evaluation by Design Engineering and all areas of pitting in vent header within 6" of the vent header to vent header bowl weld require evaluation by design Engineering. Areas of corrosion have lost coating coverage and will require disposition. Acceptance Criteria provided per memo to J. H. Callaghan From J.C. Fitzpatrick 12/7/99. Vent header bowl "H" contains significant water and requires disposition by Design Engineering. All vent header to vent header bowl interfaces require evaluation. Pitting identified all have separation of > 3 pit diameters.

See IDR 01-07

Examiner: Ralph Connell Level Resp. Eng. Date 5/1/01

Examiner: Dennis Dickson Level Resp. Eng Date 5/1/01

Reviewer: D Dickson Date 5/1/01

Reviewer: NA Date NA

ANII: M S Kahler Date 5-2-01

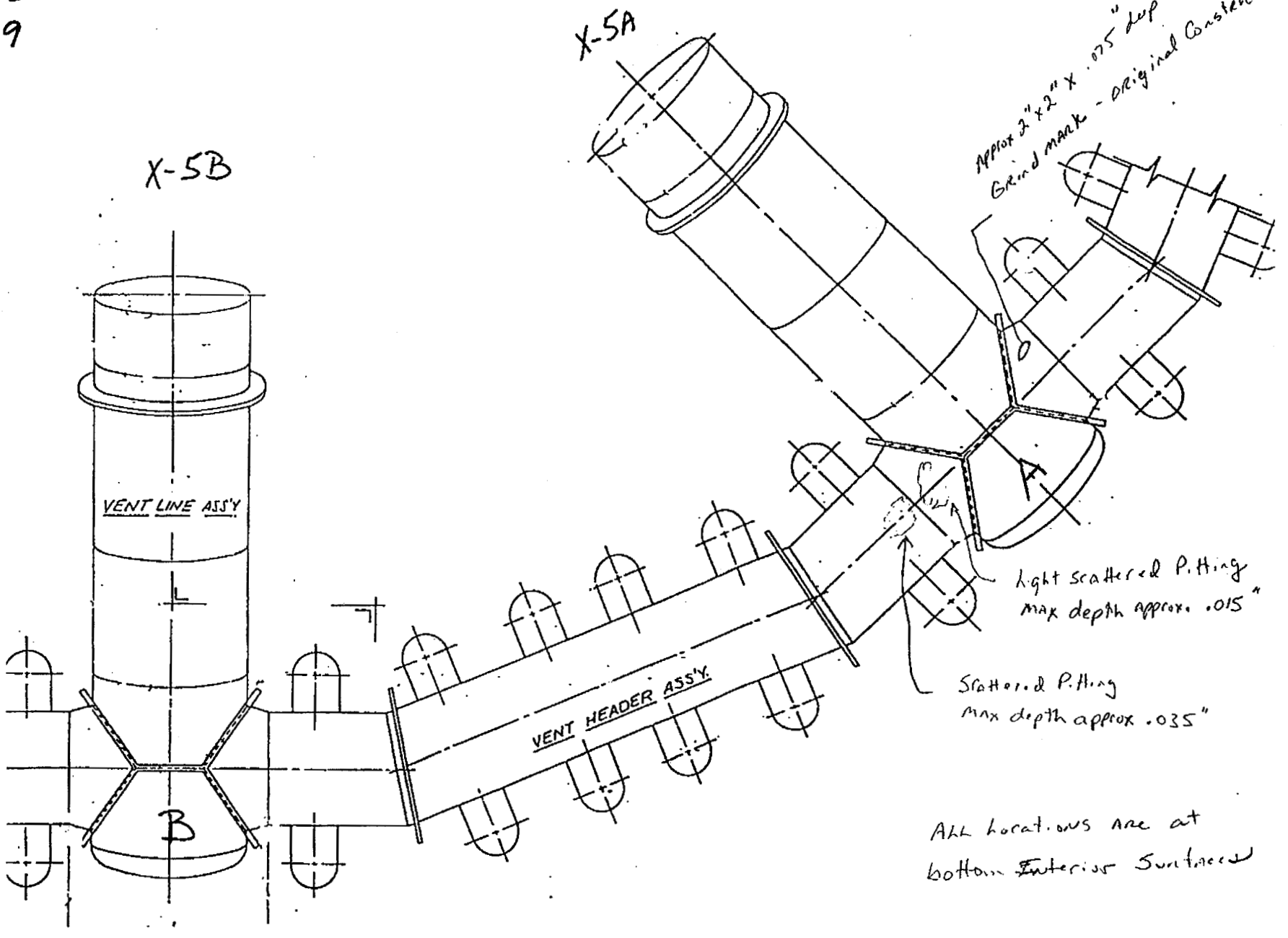
X-5A
X-5B
Approx 2"x2" x .075" deep
Grind mark - original Construc.
VENT LINE ASS'Y
VENT HEADER ASS'Y
A
B
Light scattered Pitting
max depth approx .015"
Scattered Pitting
max depth approx .035"
All locations are at
bottom Interior Surfaces

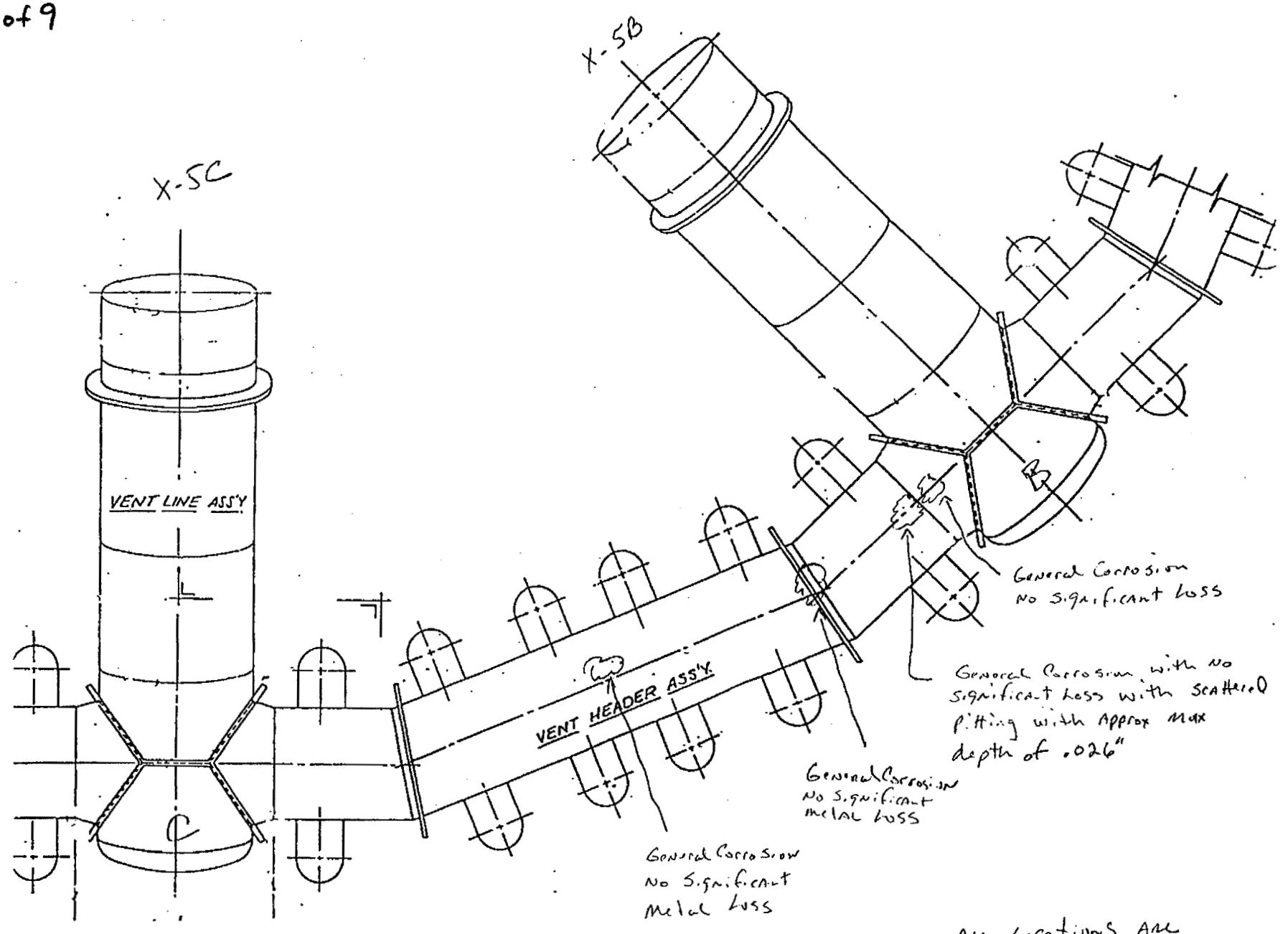

ALL Locations ARE
AT bottom Interior
Surface

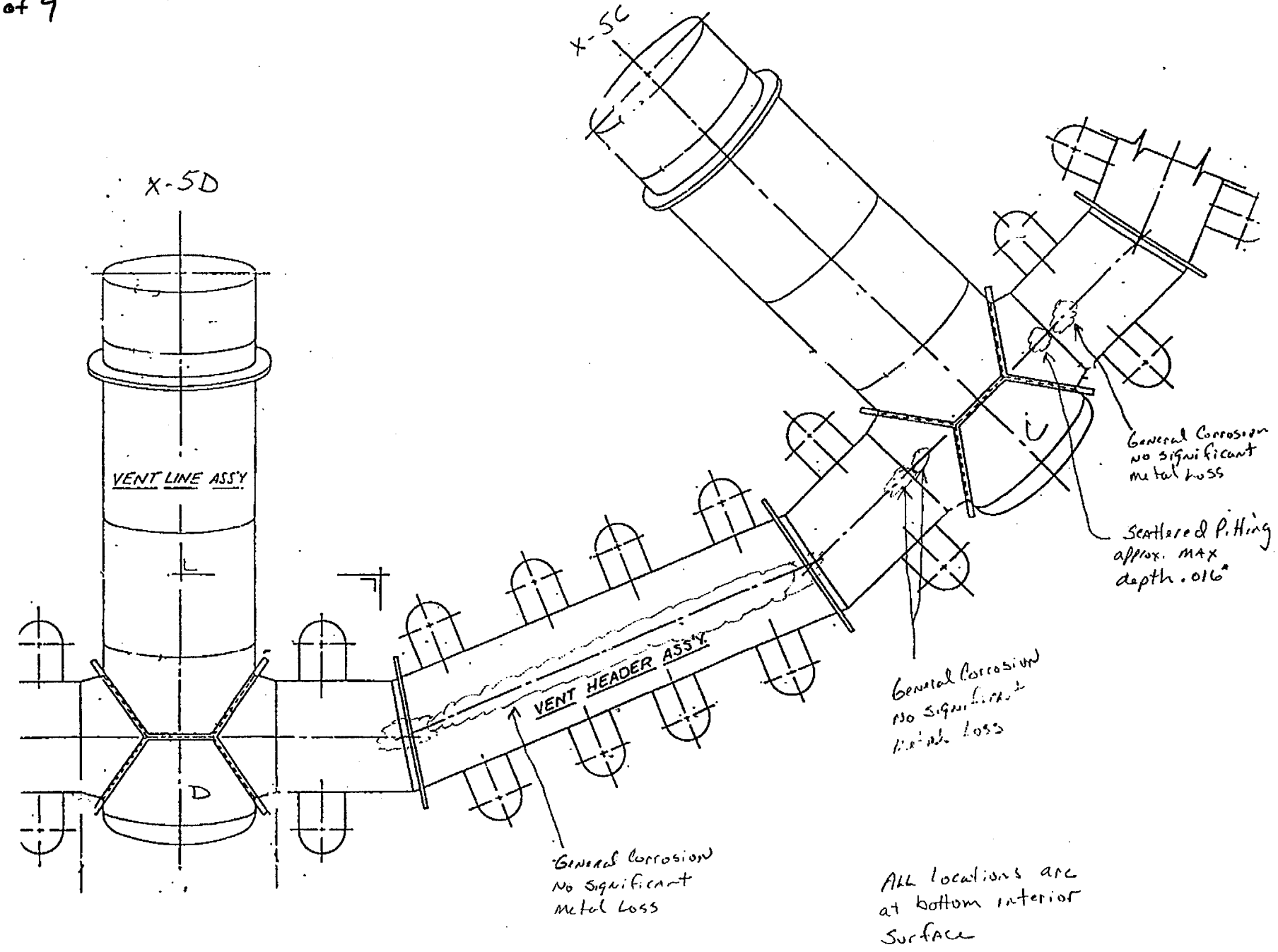
X-5C
X-5D
VENT LINE ASS'Y
VENT HEADER ASS'Y
General Corrosion
No significant
metal loss
Scattered Pitting
approx. MAX
depth .016"
General Corrosion
No significant
metal loss
General Corrosion
No Significant
Metal Loss
All locations are
at bottom interior
Surface

8047-01-051

page 5 of 9

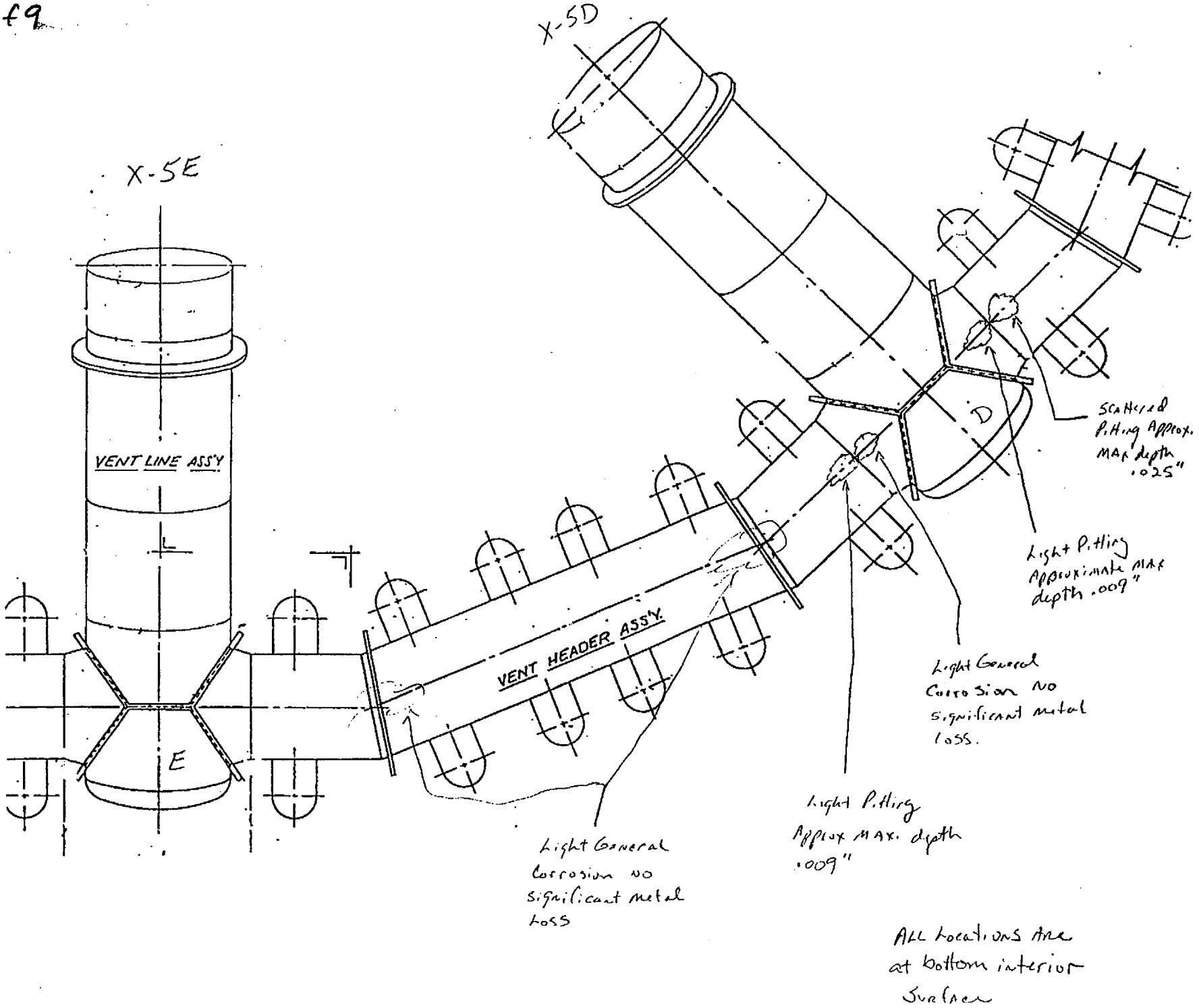

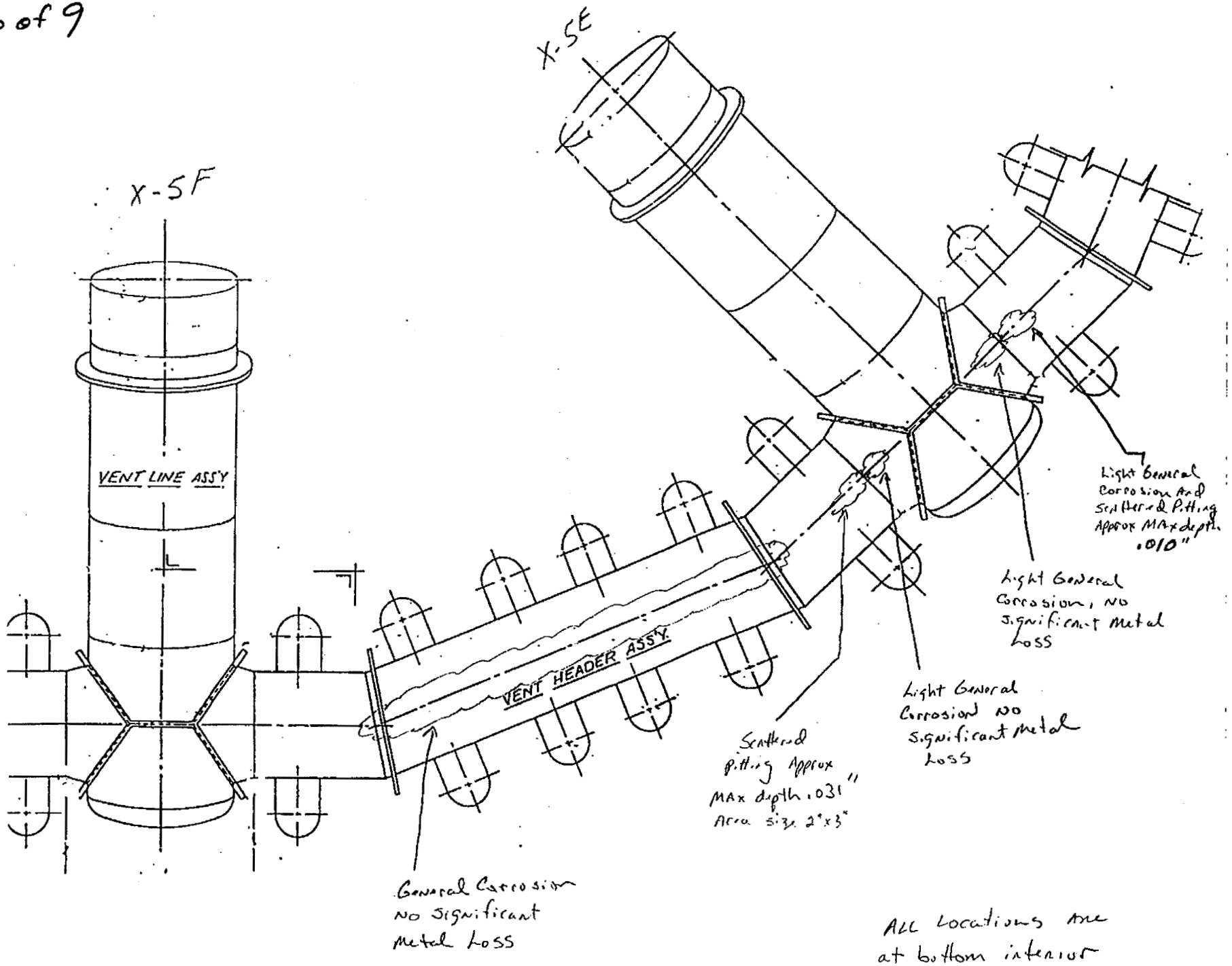

ALL Locations are at bottom interior surfaces.

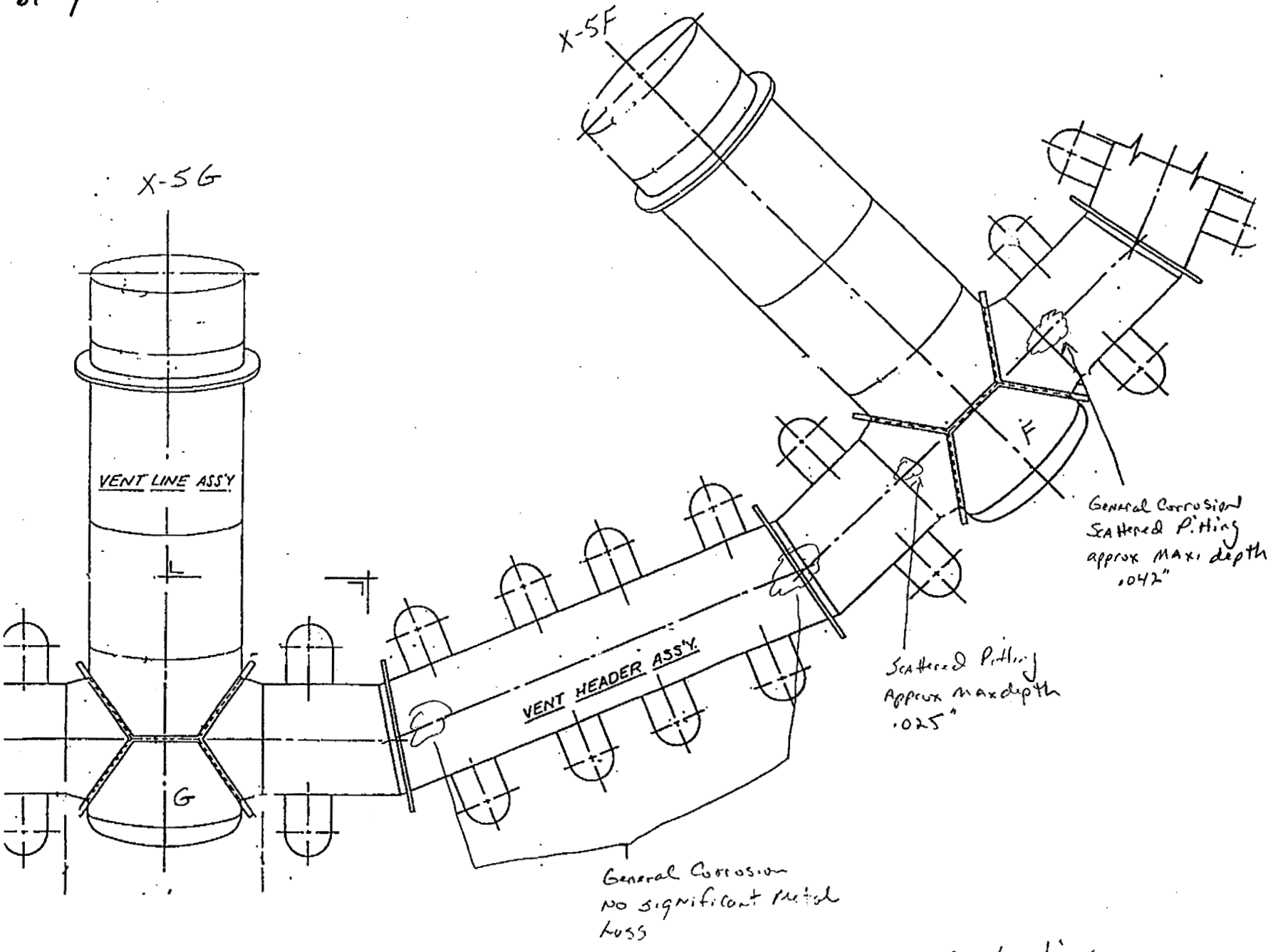

All locations are at bottom interior surface.

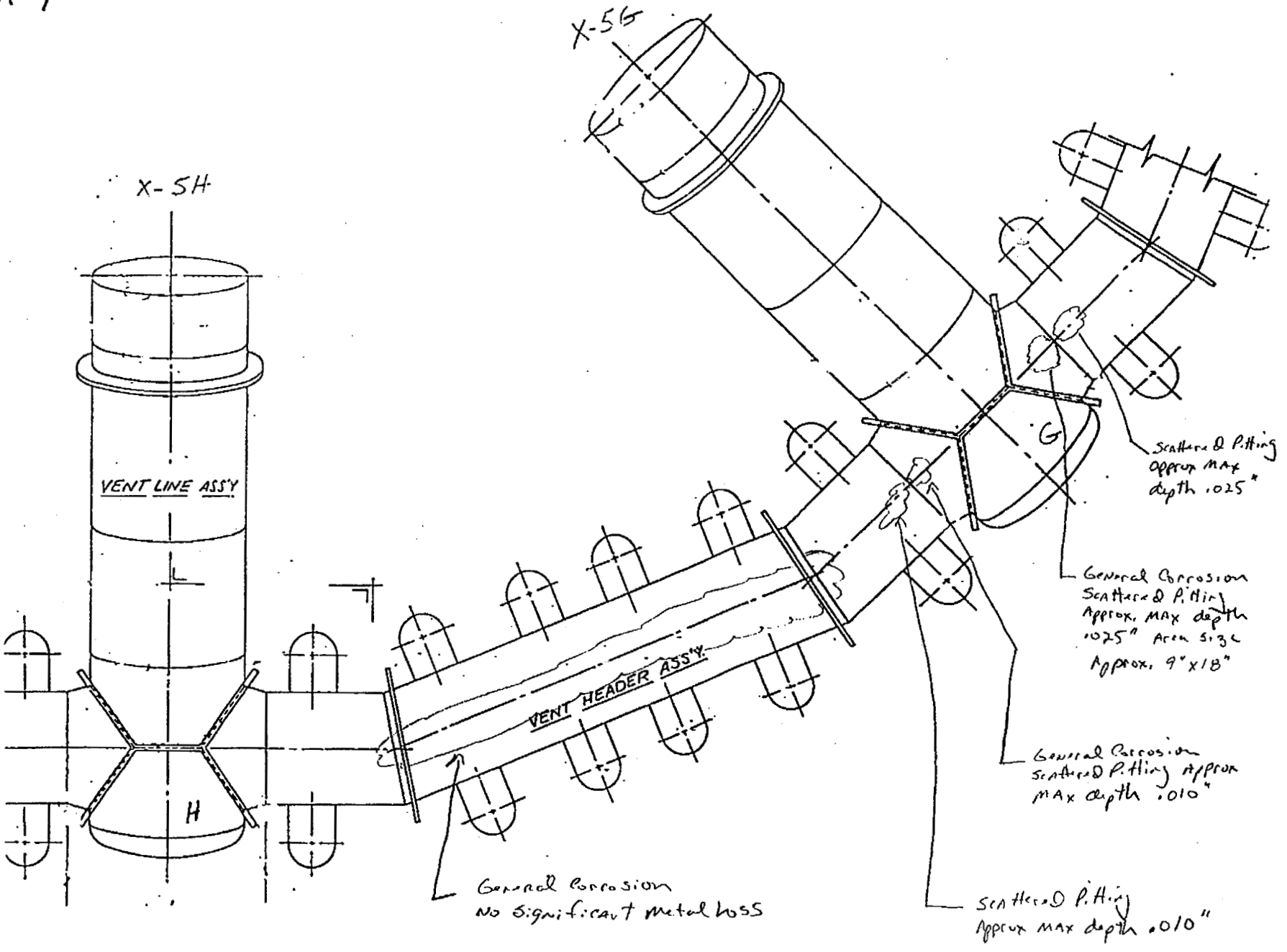

ALL Locations ARE
AT Bottom interior Surface

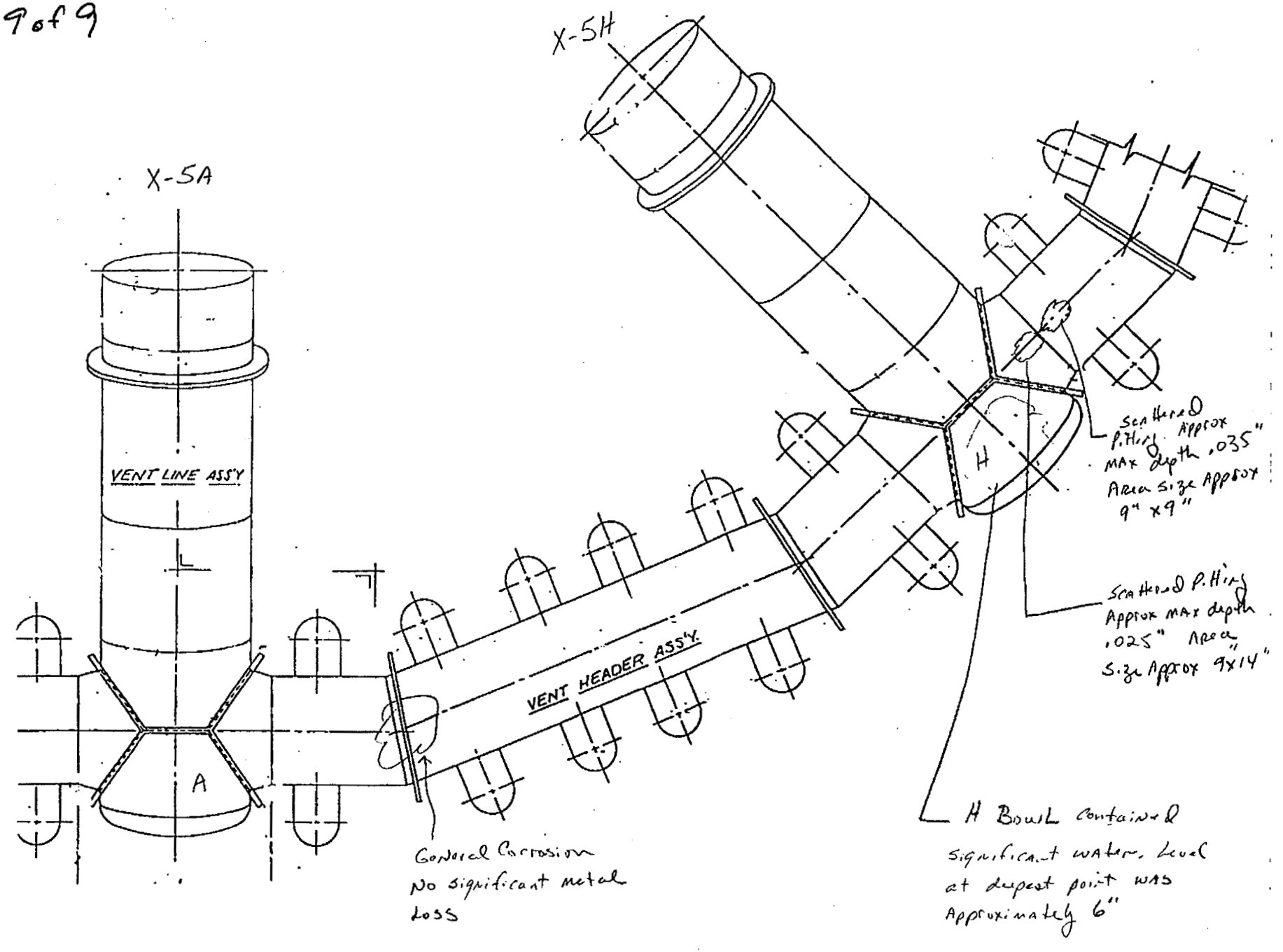

ALL locations Are at Bottom interior Surface.

INSERVICE DISCREPANCY REPORT (IDR)

IDR #: 01-07

Date: 5/2/2001

Component: Vent Header Location: Drywell

Discrepancy: Pitting and general corrosion in excess of Allowable values provided by Design Engineering. ALL Corrosion areas have lost all Coating Coverage. Vent Header Bank H contains significant Water Level. See General Visual Examination Report # 8047-01-031 Attached.

ISI Supervisor: [illegible] Date: 5/2/01

System Operability Affected: YES ___ NO X* BY: [illegible] Date: 5/2/01

Shift Supervisor Notified: YES ___ NO X BY: [illegible] Date: 5/2/01

Event Report Initiated: YES ___ NO X BY: [illegible] Date: 5/2/01

* to be further reviewed by Design Eng

Mechanical Design Engineering Evaluation: _____

Performed By: _____ Date: _____

Disposition/Repair: _____

ISI Program Coordinator: _____ Date: _____

Repair Effort:

Reference Document: _____

Repair Completion Date: _____

Service Induced: YES ___ NO ___ BY: ___ Date: ___

Sample Expansion Required: YES ___ NO ___ BY: ___ Date: ___

Sample Expansion: _____

ISI Program Coordinator: _____ Date: _____

Reinspection Required: YES ___ NO ___ BY: ___

Subsequent Inspection Required: YES ___ NO ___ BY: ___

ISI Supervisor Notified:

ISI Program Coordinator: _____ Date: _____

Reinspection Completed Satisfactorily:

ISI Supervisor: _____ Date: _____

IDR Closed:

ISI Program Coordinator: _____ Date: _____

Vermont Yankee
Visual Examination Report Form for General Visual (IWE)

Data Sheet No: IWE-GV-360

Work Order No.: 00-005035

Procedure No/Rev.: PP7024/0

Page 1 of 1 Date: 1/16/01

Component

Component ID: X-5A Thru 5H System: Drywell

Drawing No/Rev.: 5920-41 Location: External Surfaces

Visual Aids	Photo	Sketch	Method
☒ Binoculars	☒ None	☒ None	☒ Direct General
☐ Mirror	☐ Attached	☐ Attached	☐ Remote
☒ Light Source	Examination Location Description/Remarks		Remote Examination Conditions/Equipment Remarks
☐ 6" Scale	Drywell Penetrations 5A, B, C, D, E, F, G + H		N/A
☐ Other			

Examination Results, Details and Comments:

Due to location and proximity of these penetrations to the Torus they cannot be safely accessed by Ladder. Examined these penetrations from existing vantage point from top of Torus. Approximately 67% of each penetration can be Examined. The bottom 25% is unavailable and the last 33% of the Top 25% of these penetrations are unavailable for examination. Examined accessible areas of X-5A, B, C, D, E, F, G + H with no findings identified. Results are satisfactory.

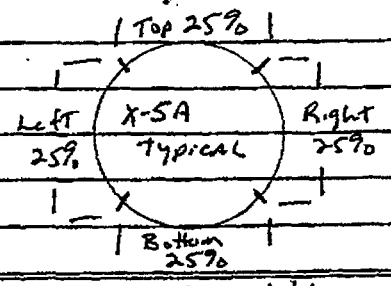

Examiner: Ralph Conwell Level Responsible Engineer Date 1/16/01

Examiner: N/A Level N/A Date N/A

Reviewer: N/A Date N/A

Reviewer: N/A Date N/A

ANII: [signature] Date 1-31-01

Data Sheet No: IWE-GV-393

Work Order No.: 00-005035

Procedure No/Rev.: PP 7024/0

Page 1 of 1 Date: 1/15/01

Vermont Yankee
Visual Examination Report Form for General Visual (IWE)

Component

Component ID: X-6 System: Drywell

Drawing No/Rev.: 5920-41 Location: External Surfaces

Visual Aids	Photo	Sketch	Method
☐ Binoculars	☒ None	☒ None	☒ Direct General
☐ Mirror	☐ Attached	☐ Attached	☐ Remote
☒ Light Source	Examination Location Description/Remarks	Remote Examination Conditions/Equipment Remarks	
☐ 6" Scale	Drywell Penetration X-6	N/A	
☐ Other			

Examination Results, Details and Comments:

Vacuumed loose debris from bottom of concrete opening sleeve. Examination of this penetration results in no findings. Results are Satisfactory.

Examiner: Ralph Connell Level Responsible Engineer Date 1/16/01

Examiner: N/A Level N/A Date N/A

Reviewer: N/A Date N/A

Reviewer: N/A Date N/A

ANII: [signature] Date 1-31-01

VYNEF 8047.06
NE 8047 Original
Page 1 of 1

Data Sheet No: 8047-01-044

Work Order No.: 00-5036

Procedure No/Rev.: 8047 R0

Page 1 of 1 Date: 4/30/01

Vermont Yankee
Visual Examination Report Form for General Visual (IWE)

Component

Component ID: X-7 A, B, C, & D System: Drywell

Drawing No/Rev.: 5920-41 Location: Steam Tunnel

Visual Aids	Photo	Sketch	Method
☐ Binoculars	☒ None	☒ None	☒ Direct General
☐ Mirror	☐ Attached	☐ Attached	☐ Remote
☒ Light Source	Examination Location Description/Remarks	Remote Examination Conditions/Equipment Remarks	
☐ 6" Scale	Examination External Drywell Pene's	N/A	
☐ Other			

Examination Results, Details and Comments:

Results of this examination are satisfactory with no findings.

Examiner: [signature] Level Resp. Eng Date 4/30/01

Examiner: N/A Level N/A Date N/A

Reviewer: [signature] Date 4/30/01

Reviewer: N/A Date N/A

ANII: [signature] Date 5-2-01

Data Sheet No: IWE-GV-394

Work Order No.: 00-005035

Procedure No/Rev.: PP7024/0

Page 1 of 1 Date: 1/16/01

Vermont Yankee
Visual Examination Report Form for General Visual (IWE)

Component

Component ID: X-8 System: Dry Well

Drawing No/Rev.: 5920-41 Location: External Surfaces

Visual Aids	Photo	Sketch	Method
☐ Binoculars	☒ None	☒ None	☒ Direct General
☐ Mirror	☐ Attached	☐ Attached	☐ Remote
☒ Light Source	Examination Location Description/Remarks		Remote Examination Conditions/Equipment Remarks
☐ 6" Scale	Dry well Penetration X-8		N/A
☐ Other			

Examination Results, Details and Comments:

Vacuumed loose debris from bottom of Concrete opening Sleeve. Note: A portion of the Styrofoam used between the metal Containment and Concrete Pour is visible at this Penetration opening. This is part of the Construction design. Examination of the penetration has no findings. Results are Satisfactory.

Examiner: Ralph Connell Level Responsible Engineer Date 1/16/01

Examiner: N/A Level N/A Date N/A

Reviewer: N/A Date N/A

Reviewer: N/A Date N/A

ANII: [signature] Date 1-31-01

Data Sheet No: 8047-01-043

Work Order No.: 00-5036

Procedure No/Rev.: 8047 R0

Page 1 of 1 Date: 4/30/01

Vermont Yankee
Visual Examination Report Form for General Visual (IWE)

Component

Component ID: X-9 A+B System: Drywell

Drawing No/Rev.: 5920-41 Location: Steam Tunnel

Visual Aids	Photo	Sketch	Method
☐ Binoculars	☒ None	☒ None	☒ Direct General
☐ Mirror	☐ Attached	☐ Attached	☐ Remote
☒ Light Source	Examination Location Description/Remarks	Remote Examination Conditions/Equipment Remarks	
☐ 6" Scale	Examination External Drywell Penet's	N/A	
☐ Other			

Examination Results, Details and Comments:

X-9A had Concrete debris between Top of pipe and Concrete sleeve. Removed Debris. Results of this examination are Satisfactory with no findings.

Examiner: [signature] Level Resp. Eng. Date 4/30/01

Examiner: N/A Level N/A Date N/A

Reviewer: [signature] Date 4/30/01

Reviewer: N/A Date N/A

ANII: [signature] Date 5-2-01

Data Sheet No: 8047-01-042

Work Order No.: 00-5036

Procedure No/Rev.: 8047 R0

Page 1 of 1 Date: 4/30/01

Vermont Yankee
Visual Examination Report Form for General Visual (IWE)

Component

Component ID: X-10 System: Drywell

Drawing No/Rev.: 5920-41 Location: Steam Tunnel

Visual Aids	Photo	Sketch	Method
☐ Binoculars	☒ None	☒ None	☒ Direct General
☐ Mirror	☐ Attached	☐ Attached	☐ Remote
☒ Light Source	Examination Location Description/Remarks	Remote Examination Conditions/Equipment Remarks	
☐ 6" Scale	External Surface Drywell Pene.	N/A	
☐ Other			

Examination Results, Details and Comments:

This Penetration is inaccessible for General Visual Exam. Metal Backed insulation covers piping to penetration opening and Blocks visual access. This Insulation can be removed for the Scheduled VT-3 exam if necessary to meet ASME Section XI requirements.

Examiner: [signature] Level Resp. Eng. Date 4/30/01

Examiner: N/A Level N/A Date N/A

Reviewer: [signature] Date 4/30/01

Reviewer: N/A Date N/A

ANII: [signature] Date 5-2-01

Data Sheet No: 8047-01-041

Work Order No.: 00-5036

Procedure No/Rev.: 8047 R0

Page 1 of 1 Date: 4/30/01

Vermont Yankee
Visual Examination Report Form for General Visual (IWE)

Component

Component ID: X-11 System: Drywell

Drawing No/Rev.: 5920-41 Location: Steam Tunnel

Visual Aids	Photo	Sketch	Method
☐ Binoculars	☒ None	☒ None	☒ Direct General
☐ Mirror	☐ Attached	☐ Attached	☐ Remote
☒ Light Source	Examination Location Description/Remarks	Remote Examination Conditions/Equipment Remarks	
☐ 6" Scale	External Surface Drywell Pene	N/A	
☐ Other			

Examination Results, Details and Comments:

This Penetration is inaccessible for General Visual Exam. Metal Backed insulation covers piping to penetration opening and Blocks visual access. This insulation can be removed for the scheduled VT-3 exam if necessary to meet ASME Section XI requirements.

Examiner: [signature] Level Resp. Eng. Date 4/30/01

Examiner: N/A Level N/A Date N/A

Reviewer: [signature] Date 4/30/01

Reviewer: N/A Date N/A

ANII: [signature] Date 5-2-01

Data Sheet No: IWE-GV-383

Work Order No.: 00-00 5035

Procedure No/Rev.: PP 7024/0

Page 1 of 1 Date: 1/15/01

Vermont Yankee
Visual Examination Report Form for General Visual (IWE)

Component

Component ID: X-12 System: Drywell

Drawing No/Rev.: 5920-41 Location: External Surface

Visual Aids	Photo	Sketch	Method
☐ Binoculars	☒ None	☒ None	☒ Direct General
☐ Mirror	☐ Attached	☐ Attached	☐ Remote
☒ Light Source	Examination Location Description/Remarks	Remote Examination Conditions/Equipment Remarks	
☐ 6" Scale	Drywell Penetration X-12	N/A	
☐ Other			

Examination Results, Details and Comments:

Examined this penetration with no findings identified. Results are satisfactory.

Examiner: [signature] Level Responsible Engineer Date 1/15/01

Examiner: N/A Level N/A Date N/A

Reviewer: N/A Date N/A

Reviewer: N/A Date N/A

ANII: [signature] Date 1-31-01

Data Sheet No: IWE-GV-382

Work Order No.: 00-005035

Procedure No/Rev.: PP 7024/0

Page 1 of 1 Date: 1/15/01

Vermont Yankee
Visual Examination Report Form for General Visual (IWE)

Component

Component ID: X-13 A + B System: Drywell Penetrations

Drawing No/Rev.: 5920-41 Location: Exterior Surface

Visual Aids	Photo	Sketch	Method
☐ Binoculars	☒ None	☒ None	☒ Direct General
☐ Mirror	☐ Attached	☐ Attached	☐ Remote
☒ Light Source	Examination Location Description/Remarks		Remote Examination Conditions/Equipment Remarks
☐ 6" Scale	Drywell Penetrations X-13A + X-13B		N/A
☐ Other			

Examination Results, Details and Comments:

Removed Debris from bottom of Concrete Sleeve for X-13A. Examined X-13A and X-13B with no findings identified. Results are satisfactory.

Examiner: Ralph Connell Level Responsible Engineer Date 1/15/01

Examiner: N/A Level N/A Date N/A

Reviewer: N/A Date N/A

Reviewer: N/A Date N/A

ANII: [illegible] Date 1-31-01

Data Sheet No: 8047-01-040

Work Order No.: 00-5037

Procedure No/Rev.: 8047 R0

Page 1 of 1 Date: 5/1/01

Vermont Yankee
Visual Examination Report Form for General Visual (IWE)

Component

Component ID: X-14 System: Drywell

Drawing No/Rev.: 5920-41 Location: Rx Bldg

Visual Aids	Photo	Sketch	Method
☐ Binoculars	☒ None	☒ None	☒ Direct General
☐ Mirror	☐ Attached	☐ Attached	☐ Remote
☒ Light Source	Examination Location Description/Remarks	Remote Examination Conditions/Equipment Remarks	
☐ 6" Scale	External Surface Drywell Pene	N/A	
☐ Other			

Examination Results, Details and Comments:

Results of this examination are satisfactory with no findings.

Examiner: [signature] Level Resp. Eng Date 5/1/01

Examiner: N/A Level N/A Date N/A

Reviewer: [signature] Date 5/1/01

Reviewer: N/A Date N/A

ANII: [signature] Date 5-2-01

Data Sheet No: 8047-01-051

Work Order No.: 00-5036

Procedure No/Rev.: 8047 R0

Page 1 of 1 Date: 5/4/01

Vermont Yankee
Visual Examination Report Form for General Visual (IWE)

Component

Component ID: X-15 System: Drywell

Drawing No/Rev.: 5920-41 Location: Reactor Building

Visual Aids	Photo	Sketch	Method
☐ Binoculars	☒ None	☒ None	☒ Direct General
☐ Mirror	☐ Attached	☐ Attached	☐ Remote
☒ Light Source	Examination Location Description/Remarks	Remote Examination Conditions/Equipment Remarks	
☐ 6" Scale	External Surface Drywell Pene	N/A	
☐ Other			

Examination Results, Details and Comments:

Results of this examination are satisfactory with no findings.

Examiner: [signature] Level Prop. Eng. Date 5/4/01

Examiner: N/A Level N/A Date N/A

Reviewer: [signature] Date 5/4/01

Reviewer: N/A Date N/A

ANII: [signature] Date 5-5-01

Data Sheet No: IWE-GV-381

Work Order No.: 00-005035

Procedure No/Rev.: PP 7024/0

Page 1 of 1 Date: 1/16/01

Vermont Yankee
Visual Examination Report Form for General Visual (IWE)

Component

Component ID: X-16A System: Drywell

Drawing No/Rev.: 5920-41 Location: External Surface

Visual Aids	Photo	Sketch	Method
☐ Binoculars	☒ None	☒ None	☒ Direct General
☐ Mirror	☐ Attached	☐ Attached	☐ Remote
☒ Light Source	Examination Location Description/Remarks	Remote Examination Conditions/Equipment Remarks	
☐ 6" Scale	Drywell Penetration X-16A	N/A	
☐ Other			

Examination Results, Details and Comments:

Examined this penetration with no findings identified. Results are satisfactory.

Examiner: Ralph Connell Level Responsible Engineer Date 1/16/01

Examiner: N/A Level N/A Date N/A

Reviewer: N/A Date N/A

Reviewer: N/A Date N/A

ANII: [illegible] Date 1-31-01

Data Sheet No: 8047-01-039

Work Order No.: 00-5037

Procedure No/Rev.: 8047 R0

Page 1 of 1 Date: 5/1/01

Vermont Yankee
Visual Examination Report Form for General Visual (IWE)

Component

Component ID: X-16B System: Drywell

Drawing No/Rev.: 5920-41 Location: Rx Bldg

Visual Aids	Photo	Sketch	Method
☐ Binoculars	☒ None	☒ None	☒ Direct General
☐ Mirror	☐ Attached	☐ Attached	☐ Remote
☒ Light Source	Examination Location Description/Remarks		Remote Examination Conditions/Equipment Remarks
☐ 6" Scale	External Surface		N/A
☐ Other	Drywell Pene		

Examination Results, Details and Comments:

Results of this examination are satisfactory with no findings.

Examiner: [signature] Level Resp Eng Date 5/1/01

Examiner: N/A Level N/A Date N/A

Reviewer: [signature] Date 5/1/01

Reviewer: N/A Date N/A

ANII: [signature] Date 5-2-01

Data Sheet No: IWE-GV-380

Work Order No.: 00-005035

Procedure No/Rev.: PP 7024/0

Page 1 of 1 Date: 1/16/01

Vermont Yankee
Visual Examination Report Form for General Visual (IWE)

Component

Component ID: X-17 System: Drywell

Drawing No/Rev.: 5920-41 Location: External Surface

Visual Aids	Photo	Sketch	Method
☐ Binoculars	☒ None	☒ None	☒ Direct General
☐ Mirror	☐ Attached	☐ Attached	☐ Remote
☒ Light Source	Examination Location Description/Remarks	Remote Examination Conditions/Equipment Remarks	
☐ 6" Scale	Drywell Penetration X-17	N/A	
☐ Other_____			

Examination Results, Details and Comments:

Examined this penetration with no findings identified. Results are satisfactory.

Examiner: Ralph Connell Level Responsible Engineer Date 1/16/01

Examiner: N/A Level N/A Date N/A

Reviewer: N/A Date N/A

Reviewer: N/A Date N/A

ANII: [signature] Date 1-31-01

Data Sheet No: IWE-GV-379

Work Order No.: 00-00 50 35

Procedure No/Rev.: PP 7024/0

Page 1 of 1 Date: 1/16/01

Vermont Yankee
Visual Examination Report Form for General Visual (IWE)

Component

Component ID: X-18 System: Drywell

Drawing No/Rev.: 5920-41 Location: External Surface

Visual Aids	Photo	Sketch	Method
☐ Binoculars	☒ None	☒ None	☒ Direct General
☐ Mirror	☐ Attached	☐ Attached	☐ Remote
☒ Light Source	Examination Location Description/Remarks	Remote Examination Conditions/Equipment Remarks	
☐ 6" Scale	Drywell Penetration X-18	N/A	
☐ Other			

Examination Results, Details and Comments:

Vacuumed Concrete Penetration Sleeve for this Penetration. Examined this Penetration with no findings identified. Results are Satisfactory.

Examiner: Ralph Connell Level Responsible Engineer Date 1/16/01

Examiner: N/A Level N/A Date N/A

Reviewer: N/A Date N/A

Reviewer: N/A Date N/A

ANII: [illegible] Date 1-31-01

Data Sheet No: IWE-GV-378

Work Order No.: 00-005035

Procedure No/Rev.: PP7024/0

Page 1 of 1 Date: 1/16/01

Vermont Yankee
Visual Examination Report Form for General Visual (IWE)

Component

Component ID: X-19 System: Drywell

Drawing No/Rev.: 5920-41 Location: External Surface

Visual Aids	Photo	Sketch	Method
☐ Binoculars	☒ None	☒ None	☒ Direct General
☐ Mirror	☐ Attached	☐ Attached	☐ Remote
☒ Light Source	Examination Location Description/Remarks	Remote Examination Conditions/Equipment Remarks	
☐ 6" Scale	Drywell Penetration X-19	N/A	
☐ Other			

Examination Results, Details and Comments:

Vacuumed concrete Penetration Sleeve for this Penetration. Examined this penetration with No findings identified. Results are Satisfactory.

Examiner: Ralph Connell Level Responsible Engineer Date 1/16/01

Examiner: N/A Level N/A Date N/A

Reviewer: N/A Date N/A

Reviewer: N/A Date N/A

ANII: [illegible] Date 1-31-01

Data Sheet No: 8047-01-038

Work Order No.: 00-5037

Procedure No/Rev.: 8047 R0

Page 1 of 1 Date: 5/1/01

Vermont Yankee
Visual Examination Report Form for General Visual (IWE)

Component

Component ID: X-19 System: Drywell

Drawing No/Rev.: 5920-41 Location: Drywell

Visual Aids	Photo	Sketch	Method
☐ Binoculars	☒ None	☒ None	☒ Direct General
☐ Mirror	☐ Attached	☐ Attached	☐ Remote
☒ Light Source	Examination Location Description/Remarks	Remote Examination Conditions/Equipment Remarks	
☐ 6" Scale	Internal Surface Drywell pene.	N/A	
☐ Other			

Examination Results, Details and Comments:

Results of this Examination are satisfactory with no findings.

Examiner: [signature] Level Resp Eng. Date 5/1/01

Examiner: N/A Level N/A Date N/A

Reviewer: [signature] Date 5/1/01

Reviewer: N/A Date N/A

ANII: [signature] Date 5-2-01

Data Sheet No: IWE-GV-377

Work Order No.: 00-005035

Procedure No/Rev.: PP 7024/0

Page 1 of 1 Date: 1/16/01

Vermont Yankee
Visual Examination Report Form for General Visual (IWE)

Component

Component ID: X-20 System: Drywell

Drawing No/Rev.: 5920-41 Location: External Surfaces

Visual Aids	Photo	Sketch	Method
☐ Binoculars	☒ None	☒ None	☒ Direct General
☐ Mirror	☐ Attached	☐ Attached	☐ Remote
☒ Light Source	Examination Location Description/Remarks	Remote Examination Conditions/Equipment Remarks	
☐ 6" Scale	Drywell Penetration X-20	N/A	
☐ Other			

Examination Results, Details and Comments:

Vacuumed concrete Penetration Sleeve for this penetration. Examined this penetration with no findings identified. Results are satisfactory.

Examiner: Ralph Connell Level Responsible Engineer Date 1/16/01

Examiner: N/A Level N/A Date N/A

Reviewer: N/A Date N/A

Reviewer: N/A Date N/A

ANII: [illegible] Date 1-31-01

Data Sheet No: IWE-GV-376

Work Order No.: 00-005035

Procedure No/Rev.: PP7024/0

Page 1 of 1 Date: 1/16/01

Vermont Yankee
Visual Examination Report Form for General Visual (IWE)

Component

Component ID: X-21 System: Drywell

Drawing No/Rev.: 5920-41 Location: External Surface

Visual Aids	Photo	Sketch	Method
☒ Binoculars	☒ None	☒ None	☒ Direct General
☐ Mirror	☐ Attached	☐ Attached	☐ Remote
☒ Light Source	Examination Location Description/Remarks	Remote Examination Conditions/Equipment Remarks	
☐ 6" Scale	Drywell Penetration X-21	N/A	
☐ Other			

Examination Results, Details and Comments:

Examined this Penetration from Existing Vantage point, (From top of Torus). Examined this Penetration with No findings identified. Results are Satisfactory.

Examiner: Ralph Connell Level Responsible Engineer Date 1/16/01

Examiner: N/A Level N/A Date N/A

Reviewer: N/A Date N/A

Reviewer: N/A Date N/A

ANII: [illegible] Date 1-31-01

Data Sheet No: IWE-GV-374

Work Order No.: 00-005035

Procedure No/Rev.: PP7024/0

Page 1 of 1 Date: 1/16/01

Vermont Yankee
Visual Examination Report Form for General Visual (IWE)

Component

Component ID: X-22 System: Drywell

Drawing No/Rev.: 5920-41 Location: External Surfaces

Visual Aids	Photo	Sketch	Method
☒ Binoculars	☒ None	☒ None	☒ Direct General
☐ Mirror	☐ Attached	☐ Attached	☐ Remote
☒ Light Source	Examination Location Description/Remarks	Remote Examination Conditions/Equipment Remarks	
☐ 6" Scale	Drywell Penetration X-22	N/A	
☐ Other			

Examination Results, Details and Comments:

Examined this Penetration from existing Vantage point, (from Top of Torus). Examined this Penetration with No findings identified. Results Are satisfactory.

Examiner: Ralph Connell Level Responsible Engineer Date 1/16/01

Examiner: N/A Level N/A Date N/A

Reviewer: N/A Date N/A

Reviewer: N/A Date N/A

ANII: [illegible] Date 1-31-01

Data Sheet No: 8047-01-037

Work Order No.: 00-5037

Procedure No/Rev.: 8047 R0

Page 1 of 1 Date: 5/1/01

Vermont Yankee
Visual Examination Report Form for General Visual (IWE)

Component

Component ID: X-23 System: Drywell

Drawing No/Rev.: 5920-41 Location: Drywell

Visual Aids	Photo	Sketch	Method
☐ Binoculars	☒ None	☒ None	☒ Direct General
☐ Mirror	☐ Attached	☐ Attached	☐ Remote
☒ Light Source	Examination Location Description/Remarks	Remote Examination Conditions/Equipment Remarks	
☐ 6" Scale	Internal Surface	N/A	
☐ Other	Drywell Liner		

Examination Results, Details and Comments:

Insulation Blocks access for Complete General Visual Exam. Internal Surface in inaccessible for General Visual Exam.

This insulation can be removed for the scheduled VT-3 Exam if required to meet ASME Section XI requirements.

Examiner: [signature] Level Resp. Eng. Date 5/1/01

Examiner: N/A Level N/A Date N/A

Reviewer: [signature] Date 5/1/01

Reviewer: N/A Date N/A

ANII: [signature] Date 5-2-01

Data Sheet No: IWE-GV-373

Work Order No.: 00-005035

Procedure No/Rev.: PP7024/0

Page 1 of 1 Date: 1/16/01

Vermont Yankee
Visual Examination Report Form for General Visual (IWE)

Component

Component ID: X-23 System: Drywell

Drawing No/Rev.: 5920-41 Location: External Surfaces

Visual Aids	Photo	Sketch	Method
☒ Binoculars	☒ None	☒ None	☒ Direct General
☐ Mirror	☐ Attached	☐ Attached	☐ Remote
☒ Light Source	Examination Location Description/Remarks	Remote Examination Conditions/Equipment Remarks	
☐ 6" Scale	Drywell Penetration X-23	N/A	
☐ Other			

Examination Results, Details and Comments:

Examined this penetration from existing vantage point, (from Top of Torus). Examined this penetrations with no findings identified. Results are satisfactory.

Examiner: Ralph Connell Level Responsible Engineer Date 1/16/01

Examiner: N/A Level N/A Date N/A

Reviewer: N/A Date N/A

Reviewer: N/A Date N/A

ANII: [illegible] Date 1-31-01

Data Sheet No: 8047-01-036

Work Order No.: 00-5037

Procedure No/Rev.: 8047 R0

Page 1 of 1 Date: 5/1/01

Vermont Yankee
Visual Examination Report Form for General Visual (IWE)

Component

Component ID: X-24 System: Drywell

Drawing No/Rev.: 5920-41 Location: Drywell

Visual Aids	Photo	Sketch	Method
☐ Binoculars	☒ None	☒ None	☒ Direct General
☐ Mirror	☐ Attached	☐ Attached	☐ Remote
☒ Light Source	Examination Location Description/Remarks	Remote Examination Conditions/Equipment Remarks	
☐ 6" Scale	Internal Surface Drywell pene.	N/A	
☐ Other			

Examination Results, Details and Comments:

Insulation Blocks access for Complete General Visual Exam. Internal Surface is inaccessible for General Visual Exam.

This insulation can be removed for the Scheduled VT-3 Exam if required to meet ASME Section XI requirements.

Examiner: [signature] Level Prop. Eng. Date 5/1/01

Examiner: N/A Level N/A Date N/A

Reviewer: [signature] Date 5/1/01

Reviewer: N/A Date N/A

ANII: [signature] Date 5-2-01

Vermont Yankee
Visual Examination Report Form for General Visual (IWE)

Data Sheet No: IWE-GV-372

Work Order No.: 00-005035

Procedure No/Rev.: PP7024/0

Page 1 of 1 Date: 1/16/01

Component

Component ID: X-24 System: Drywell

Drawing No/Rev.: 5920-41 Location: External Surfaces

Visual Aids	Photo	Sketch	Method
☒ Binoculars	☒ None	☒ None	☒ Direct General
☐ Mirror	☐ Attached	☐ Attached	☐ Remote
☒ Light Source	Examination Location Description/Remarks	Remote Examination Conditions/Equipment Remarks	
☐ 6" Scale	Drywell Penetration X-24	N/A	
☐ Other			

Examination Results, Details and Comments:

Examined this penetration from existing vantage point, (from top of Torus). Examined this penetration with no findings identified. Results are satisfactory.

Examiner: Ralph Conwell Level Responsible Engineer Date 1/16/01

Examiner: N/A Level N/A Date N/A

Reviewer: N/A Date N/A

Reviewer: N/A Date N/A

ANII: [illegible] Date 1/31/01

Data Sheet No: IWE-GV-368

Work Order No.: 00-00 5035

Procedure No/Rev.: PP7024/0

Page 1 of 1 Date: 1/16/01

Vermont Yankee
Visual Examination Report Form for General Visual (IWE)

Component

Component ID: X-25 System: Drywell

Drawing No/Rev.: 5920-41 Location: External Surfaces

Visual Aids	Photo	Sketch	Method
☐ Binoculars	☒ None	☒ None	☒ Direct General
☐ Mirror	☐ Attached	☐ Attached	☐ Remote
☒ Light Source	Examination Location Description/Remarks	Remote Examination Conditions/Equipment Remarks	
☐ 6" Scale	Drywell Penetration X-25	N/A	
☐ Other			

Examination Results, Details and Comments:

The Styrofoam spacer material used between the steel containment and the concrete pour is visible at this penetration. This is part of the original construction design. Examined this penetration with no findings identified. Results are satisfactory.

Examiner: Ralph Cornwell Level Responsible Engineer Date 1/16/01

Examiner: N/A Level N/A Date N/A

Reviewer: N/A Date N/A

Reviewer: N/A Date N/A

ANII: [illegible] Date 1-31-01

Data Sheet No: IWE-GV-371

Work Order No.: 00-005035

Procedure No/Rev.: PP 7024/0

Page 1 of 1 Date: 1/16/01

Vermont Yankee
Visual Examination Report Form for General Visual (IWE)

Component

Component ID: X-26 System: Drywell

Drawing No/Rev.: 5920-41 Location: External Surfaces

Visual Aids	Photo	Sketch	Method
☐ Binoculars	☒ None	☒ None	☒ Direct General
☐ Mirror	☐ Attached	☐ Attached	☐ Remote
☒ Light Source	Examination Location Description/Remarks	Remote Examination Conditions/Equipment Remarks	
☐ 6" Scale	Drywell Penetration X-26	N/A	
☐ Other			

Examination Results, Details and Comments:

Removed weld rod holder from lower part of concrete sleeve and vacuumed debris. Examined this penetration with no findings identified. Results are satisfactory.

Examiner: Ralph Connell Level Responsible Engineer Date 1/16/01

Examiner: N/A Level N/A Date N/A

Reviewer: N/A Date N/A

Reviewer: N/A Date N/A

ANII: Vikyath Date 1-31-01

Data Sheet No: 8047-01-050

Work Order No.: 00-5036

Procedure No/Rev.: 8047 R0

Page 1 of 1 Date: 5/4/01

Vermont Yankee
Visual Examination Report Form for General Visual (IWE)

Component

Component ID: X-27 System: Drywell

Drawing No/Rev.: 5920-41 Location: Reactor Building

Visual Aids	Photo	Sketch	Method
☐ Binoculars	☒ None	☒ None	☒ Direct General
☐ Mirror	☐ Attached	☐ Attached	☐ Remote
☒ Light Source	Examination Location Description/Remarks		Remote Examination Conditions/Equipment Remarks
☐ 6" Scale	External Surface Drywell Plane		N/A
☐ Other			

Examination Results, Details and Comments:

Styrofoam used during original construction is present in the upper 2/3 of this penetration. It was originally placed for the original concrete pour and is located between the inside surface of the concrete and the outside surface of the drywell. This condition is acceptable as is. Results of this examination are satisfactory with no findings.

Examiner: [signature] Level Cert Date 5/4/01

Examiner: N/A Level N/A Date N/A

Reviewer: [signature] Date 5/4/01

Reviewer: N/A Date N/A

ANII: [signature] Date 5-5-01

370

Data Sheet No: IWE-GV-~~369~~ 1/29

Work Order No.: 00-005035

Procedure No/Rev.: PP 7024/0

Page 1 of 1 Date: 1/16/01

Vermont Yankee
Visual Examination Report Form for General Visual (IWE)

Component

Component ID: X-28 System: Drywell

Drawing No/Rev.: 5920-41 Location: External Surfaces

Visual Aids	Photo	Sketch	Method
☐ Binoculars	☒ None	☒ None	☒ Direct General
☐ Mirror	☐ Attached	☐ Attached	☐ Remote
☒ Light Source	Examination Location Description/Remarks	Remote Examination Conditions/Equipment Remarks	
☐ 6" Scale	Drywell Penetration X-28	N/A	
☐ Other			

Examination Results, Details and Comments:

Examined this penetration with no findings identified. Results are satisfactory.

Examiner: Ralph Connell Level Responsible Engineer Date 1/16/01

Examiner: N/A Level N/A Date N/A

Reviewer: N/A Date N/A

Reviewer: N/A Date N/A

ANII: [signature] Date 1-31-01

Data Sheet No: IWE-GV-369

Work Order No.: 00-00 50 35

Procedure No/Rev.: PP 7024/0

Page 1 of 1 Date: 1/16/01

Vermont Yankee
Visual Examination Report Form for General Visual (IWE)

Component

Component ID: X-29 System: Drywell

Drawing No/Rev.: 5920-41 Location: External Surfaces.

Visual Aids	Photo	Sketch	Method
☐ Binoculars	☒ None	☒ None	☒ Direct General
☐ Mirror	☐ Attached	☐ Attached	☐ Remote
☒ Light Source	Examination Location Description/Remarks		Remote Examination Conditions/Equipment Remarks
☐ 6" Scale	Drywell Penetration X-29		N/A
☐ Other			

Examination Results, Details and Comments:

Examined this penetration with no findings identified. Results are satisfactory.

Examiner: Ralph Connell Level Responsible Engineer Date 1/16/01

Examiner: N/A Level N/A Date N/A

Reviewer: N/A Date N/A

Reviewer: N/A Date N/A

ANII: [signature] Date 1-31-01

Data Sheet No: IWE-GV-375

Work Order No.: 00-00 5035

Procedure No/Rev.: PP 7024/0

Page 1 of 1 Date: 1/16/01

Vermont Yankee
Visual Examination Report Form for General Visual (IWE)

Component

Component ID: X-30 System: Drywell

Drawing No/Rev.: 5920-41 Location: External Surface

Visual Aids	Photo	Sketch	Method
☐ Binoculars	☒ None	☒ None	☒ Direct General
☐ Mirror	☐ Attached	☐ Attached	☐ Remote
☒ Light Source	Examination Location Description/Remarks	Remote Examination Conditions/Equipment Remarks	
☐ 6" Scale	Drywell Penetration X-30	N/A	
☐ Other			

Examination Results, Details and Comments:

Examined this penetration with No findings identified. Results are satisfactory.

Examiner: Ralph Connell Level Responsible Engineer Date 1/16/01

Examiner: N/A Level N/A Date N/A

Reviewer: N/A Date N/A

Reviewer: N/A Date N/A

ANII: [illegible] Date 1-31-01

Data Sheet No: IWE-GV-365

Work Order No.: 00-005035

Procedure No/Rev.: PP 7024/0

Page 1 of 1 Date: 1/16/01

Vermont Yankee
Visual Examination Report Form for General Visual (IWE)

Component

Component ID: X-31 System: Drywell

Drawing No/Rev.: 5920-41 Location: External Surfaces

Visual Aids	Photo	Sketch	Method
☐ Binoculars	☒ None	☒ None	☒ Direct General
☐ Mirror	☐ Attached	☐ Attached	☐ Remote
☒ Light Source	Examination Location Description/Remarks	Remote Examination Conditions/Equipment Remarks	
☐ 6" Scale	Drywell Penetration X-31	N/A	
☐ Other			

Examination Results, Details and Comments:

The Styrofoam spacer material used between the steel containment and the concrete pour is visible at this penetration. This is part of the original construction design. Examined this penetration with no findings identified. Results are satisfactory. Vacuumed concrete penetration sleeve.

Examiner: Ralph Connell Level Responsible Engineer Date 1/16/01

Examiner: N/A Level N/A Date N/A

Reviewer: N/A Date N/A

Reviewer: N/A Date N/A

ANII: [signature] Date 1-31-01

Data Sheet No: IWE-GV-367

Work Order No.: 00-00 5035

Procedure No/Rev.: PP7024/0

Page 1 of 1 Date: 1/16/01

Vermont Yankee
Visual Examination Report Form for General Visual (IWE)

Component

Component ID: X-32 System: Drywell

Drawing No/Rev.: 5920-41 Location: External Surfaces

Visual Aids	Photo	Sketch	Method
☐ Binoculars	☒ None	☒ None	☒ Direct General
☐ Mirror	☐ Attached	☐ Attached	☐ Remote
☒ Light Source	Examination Location Description/Remarks	Remote Examination Conditions/Equipment Remarks	
☐ 6" Scale	Drywell Penetration X-32	N/A	
☐ Other			

Examination Results, Details and Comments:

Vacuumed debris from concrete penetration sleeve. Examined this penetration with no findings identified. Results are satisfactory.

Examiner: Ralph Cornwell Level Responsible Engineer Date 1/16/01

Examiner: N/A Level N/A Date N/A

Reviewer: N/A Date N/A

Reviewer: N/A Date N/A

ANII: V Dyson Date 1-31-01

Data Sheet No: IWE-GV-366

Work Order No.: 00-005035

Procedure No/Rev.: PP 7024/0

Page 1 of 1 Date: 1/15/01

Vermont Yankee
Visual Examination Report Form for General Visual (IWE)

Component

Component ID: X-33 System: Drywell

Drawing No/Rev.: 5920-41 Location: External Surface

Visual Aids	Photo	Sketch	Method
☐ Binoculars	☒ None	☒ None	☒ Direct General
☐ Mirror	☐ Attached	☐ Attached	☐ Remote
☒ Light Source	Examination Location Description/Remarks	Remote Examination Conditions/Equipment Remarks	
☐ 6" Scale	Drywell Penetration X-33	N/A	
☐ Other			

Examination Results, Details and Comments:

Examined this penetration with no findings identified. Results are satisfactory.

Examiner: [signature] Level Responsible Engineer Date 1/15/01

Examiner: N/A Level N/A Date N/A

Reviewer: N/A Date N/A

Reviewer: N/A Date N/A

ANII: [signature] Date 1-31-01

Data Sheet No: IWE-GV-364

Work Order No.: 00-005035

Procedure No/Rev.: PP 7024/0

Page 1 of 1 Date: 1/16/01

Vermont Yankee
Visual Examination Report Form for General Visual (IWE)

Component

Component ID: X-34 System: Drywell

Drawing No/Rev.: 5920-41 Location: External Surfaces

Visual Aids	Photo	Sketch	Method
☐ Binoculars ☐ Mirror ☒ Light Source ☐ 6" Scale ☐ Other	☒ None ☐ Attached	☒ None ☐ Attached	☒ Direct General ☐ Remote

Examination Location Description/Remarks	Remote Examination Conditions/Equipment Remarks
Drywell Penetration X-34	N/A

Examination Results, Details and Comments:

The Styro foam spacer material used between the steel containment and the concrete pour is visible at this penetration. This is part of the original construction design. Vacuumed concrete penetration sleeve. Examined this penetration with no findings identified. Results are satisfactory.

Examiner: Ralph Connell Level Responsible Engineer Date 1/16/01

Examiner: N/A Level N/A Date N/A

Reviewer: N/A Date N/A

Reviewer: N/A Date N/A

ANII: [signature] Date 1-31-01

Data Sheet No: 8047-01-035

Work Order No.: 00-5037

Procedure No/Rev.: 8047 R0

Page 1 of 1 Date: 5/1/01

Vermont Yankee
Visual Examination Report Form for General Visual (IWE)

Component

Component ID: X-34 System: Drywell

Drawing No/Rev.: 5920-41 Location: Drywell

Visual Aids	Photo	Sketch	Method
☐ Binoculars	☒ None	☒ None	☒ Direct General
☐ Mirror	☐ Attached	☐ Attached	☐ Remote
☒ Light Source	Examination Location Description/Remarks	Remote Examination Conditions/Equipment Remarks	
☐ 6" Scale	Internal Surface Drywell Pene.	N/A	
☐ Other			

Examination Results, Details and Comments:

Results of this Examination Are satisfactory with no findings.

Examiner: [signature] Level Resp Eng Date 5/1/01

Examiner: N/A Level N/A Date N/A

Reviewer: [signature] Date 5/1/01

Reviewer: N/A Date N/A

ANII: [signature] Date 5-2-01

Data Sheet No: IWE-GV-363

Work Order No.: 00-005035

Procedure No/Rev.: PP 7024/0

Page 1 of 1 Date: 1/16/01

Vermont Yankee
Visual Examination Report Form for General Visual (IWE)

Component

Component ID: X-39 A+B System: Drywell

Drawing No/Rev.: 5920-41 Location: External Surfaces

Visual Aids	Photo	Sketch	Method
☐ Binoculars	☒ None	☒ None	☒ Direct General
☐ Mirror	☐ Attached	☐ Attached	☐ Remote
☒ Light Source	Examination Location Description/Remarks	Remote Examination Conditions/Equipment Remarks	
☐ 6" Scale	Drywell Penetrations X-39 A+B	N/A	
☐ Other			

Examination Results, Details and Comments:

Examined Penetration X-39 B on 1/15/01 with no findings identified. Results are satisfactory for X-39B. Penetration X-39A is inaccessibly for External examination due to insulation in place which blocks viewing access to Penetration. X-39A is inaccessibly for General Visual Exam.

Examiner: Ralph Connell Level Responsible Engineer Date 1/16/01

Examiner: N/A Level N/A Date N/A

Reviewer: N/A Date N/A

Reviewer: N/A Date N/A

ANII: [signature] Date 1-31-01

Data Sheet No: 8047-01-034

Work Order No.: 00-5036

Procedure No/Rev.: 8047 R0

Page 1 of 1 Date: 5/1/01

Vermont Yankee
Visual Examination Report Form for General Visual (IWE)

Component

Component ID: X-41 System: Drywell

Drawing No/Rev.: 5920-41 Location: Reactor Building

Visual Aids	Photo	Sketch	Method
☐ Binoculars	☒ None	☒ None	☒ Direct General
☐ Mirror	☐ Attached	☐ Attached	☐ Remote
☒ Light Source	Examination Location Description/Remarks	Remote Examination Conditions/Equipment Remarks	
☐ 6" Scale	External Surface Drywell Pene	N/A	
☐ Other			

Examination Results, Details and Comments:

Results of this Examination Are Satisfactory with no findings.

Examiner: [signature] Level Prof. Eng Date 5/1/01

Examiner: N/A Level N/A Date N/A

Reviewer: [signature] Date 5/1/01

Reviewer: N/A Date N/A

ANII: [signature] Date 5-2-01

Vermont Yankee
Visual Examination Report Form for General Visual (IWE)

Data Sheet No: IWE-GV-362

Work Order No.: 00-005035

Procedure No/Rev.: PP7024/0

Page 1 of 1 Date: 1/15/01

Component

Component ID: X-42 System: Drywell

Drawing No/Rev.: 5920-41 Location: External Surfaces

Visual Aids	Photo	Sketch	Method
☐ Binoculars	☒ None	☒ None	☒ Direct General
☐ Mirror	☐ Attached	☐ Attached	☐ Remote
☒ Light Source	Examination Location Description/Remarks	Remote Examination Conditions/Equipment Remarks	
☐ 6" Scale	Drywell Penetration X-42	N/A	
☐ Other			

Examination Results, Details and Comments:

Examined this Penetration with no findings identified. Results are satisfactory.

Examiner: Ralph Conwell Level Responsible Engineer Date 1/15/01

Examiner: N/A Level N/A Date N/A

Reviewer: N/A Date N/A

Reviewer: N/A Date N/A

ANII: [illegible] Date 1-31-01

Data Sheet No: ~~8058~~ 8047-01-049 (RB5-4-01)

Work Order No.: 00-5036

Procedure No/Rev.: 8047 R0

Page 1 of 1 Date: 5/4/01

Vermont Yankee
Visual Examination Report Form for General Visual (IWE)

Component

Component ID: X-43 System: Drywell

Drawing No/Rev.: 5920-41 Location: Reactor Building

Visual Aids	Photo	Sketch	Method
☐ Binoculars	☒ None	☒ None	☒ Direct General
☐ Mirror	☐ Attached	☐ Attached	☐ Remote
☒ Light Source	Examination Location Description/Remarks	Remote Examination Conditions/Equipment Remarks	
☐ 6" Scale	External Surface Drywell Pene.	N/A	
☐ Other			

Examination Results, Details and Comments:

This penetration is not safely accessible from the exterior due to elevation of penetration and Plant equipment Runs Located at potential Ladder access points. Examination of the portion of this penetration visible from the 252' Level is satisfactory with no findings.

Examiner: [signature] Level Resp Eng Date 5/4/01

Examiner: N/A Level N/A Date N/A

Reviewer: [signature] Date 5/4/01

Reviewer: N/A Date N/A

ANII: [signature] Date 5-5-01

Data Sheet No: IWE-GV-361

Work Order No.: 00-005035

Procedure No/Rev.: PP7024/0

Page 1 of 1 Date: 1/15/01

Vermont Yankee
Visual Examination Report Form for General Visual (IWE)

Component

Component ID: X-45 System: Drywell

Drawing No/Rev.: 5920-41 Location: External Surfaces

Visual Aids	Photo	Sketch	Method
☐ Binoculars	☒ None	☒ None	☒ Direct General
☐ Mirror	☐ Attached	☐ Attached	☐ Remote
☒ Light Source	Examination Location Description/Remarks	Remote Examination Conditions/Equipment Remarks	
☐ 6" Scale	Drywell Penetration X-45	N/A	
☐ Other			

Examination Results, Details and Comments:

Examined this penetration with no findings identified. Results are Satisfactory.

Examiner: Ralph Connell Level Responsible Engineer Date 1/15/01

Examiner: N/A Level N/A Date N/A

Reviewer: N/A Date N/A

Reviewer: N/A Date N/A

ANII: [signature] Date 1-31-01

VYNEF 8047.06
NE 8047 Original
Page 1 of 1

Data Sheet No: 8047-01-033

Work Order No.: 00-5036

Procedure No/Rev.: 8047 R0

Page 1 of 1 Date: 5/1/01

Vermont Yankee
Visual Examination Report Form for General Visual (IWE)

Component

Component ID: X-47 System: Drywell

Drawing No/Rev.: 5920-41 Location: Reactor Building

Visual Aids	Photo	Sketch	Method
☐ Binoculars	☒ None	☒ None	☒ Direct General
☐ Mirror	☐ Attached	☐ Attached	☐ Remote
☒ Light Source	Examination Location Description/Remarks	Remote Examination Conditions/Equipment Remarks	
☐ 6" Scale	External Surface Drywell Pene	N/A	
☐ Other			

Examination Results, Details and Comments:

Results of this Examination are satisfactory with no findings.

Examiner: [signature] Level Resp. Eng. Date 5/1/01

Examiner: N/A Level N/A Date N/A

Reviewer: [signature] Date 5/1/01

Reviewer: N/A Date N/A

ANII: [signature] Date 5-1-01

Data Sheet No: IWE-GV-384

Work Order No.: 00-005035

Procedure No/Rev.: PP 7024/0

Page 1 of 1 Date: 1/16/01

Vermont Yankee
Visual Examination Report Form for General Visual (IWE)

Component

Component ID: X-48 System: Dry well

Drawing No/Rev.: 5920-41 Location: External Surface

Visual Aids	Photo	Sketch	Method
☒ Binoculars	☒ None	☒ None	☒ Direct General
☐ Mirror	☐ Attached	☐ Attached	☐ Remote
☒ Light Source	Examination Location Description/Remarks		Remote Examination Conditions/Equipment Remarks
☐ 6" Scale	Dry well Penetration X-48		Binoculars + Light Viewed from Torus
☐ Other			

Examination Results, Details and Comments:

Examined this Penetration from existing Vantage Point (Top of Torus). Examined this penetration with no findings identified. Results are satisfactory.

Examiner: Ralph Cornell Level Responsible Engineer Date 1/16/01

Examiner: N/A Level N/A Date N/A

Reviewer: N/A Date N/A

Reviewer: N/A Date N/A

ANII: [signature] Date 1-3-01

Data Sheet No: IWE-GV-387

Work Order No.: 00-00 5035

Procedure No/Rev.: PP 7024/0

Page 1 of 1 Date: 1/15/01

Vermont Yankee
Visual Examination Report Form for General Visual (IWE)

Component

Component ID: X-49 System: Dry Well

Drawing No/Rev.: 5920-41 Location: External Surface

Visual Aids	Photo	Sketch	Method
☐ Binoculars	☒ None	☒ None	☒ Direct General
☐ Mirror	☐ Attached	☐ Attached	☐ Remote
☒ Light Source	Examination Location Description/Remarks	Remote Examination Conditions/Equipment Remarks	
☐ 6" Scale	Dry well Penetration X-49	N/A	
☐ Other			

Examination Results, Details and Comments:

Examination of this Penetration results in no findings. Results are satisfactory.

Examiner: Ralph Connell Level Responsible Engineer Date 1/15/01

Examiner: N/A Level N/A Date N/A

Reviewer: N/A Date N/A

Reviewer: N/A Date N/A

ANII: R. Kyger Date 1-31-01

Data Sheet No: IWE-GV-386

Work Order No.: 00.00 5035

Procedure No/Rev.: PP7024/0

Page 1 of 1 Date: 1/15/01

Vermont Yankee
Visual Examination Report Form for General Visual (IWE)

Component

Component ID: X-50 System: Dry Well

Drawing No/Rev.: 5920-41 Location: External Surface

Visual Aids	Photo	Sketch	Method
☐ Binoculars	☒ None	☒ None	☒ Direct General
☐ Mirror	☐ Attached	☐ Attached	☐ Remote
☒ Light Source	Examination Location Description/Remarks	Remote Examination Conditions/Equipment Remarks	
☐ 6" Scale	Dry well Penetration X-50	N/A	
☐ Other			

Examination Results, Details and Comments:

Vacuumed debris from Penetration sleeve.
Examination of this Penetration results in No findings.
Results are Satisfactory.

Examiner: [signature] Level Responsibly Engineer Date 1/15/01

Examiner: N/A Level N/A Date N/A

Reviewer: N/A Date N/A

Reviewer: N/A Date N/A

ANII: [signature] Date 1-31-01

Data Sheet No: IWE-GV-385

Work Order No.: 00-00 5035

Procedure No/Rev.: PP 7024/0

Page 1 of 1 Date: 1/15/01

Vermont Yankee
Visual Examination Report Form for General Visual (IWE)

Component

Component ID: X-51 System: Drywell

Drawing No/Rev.: 5920-41 Location: External Surface

Visual Aids	Photo	Sketch	Method
☐ Binoculars	☒ None	☒ None	☒ Direct General
☐ Mirror	☐ Attached	☐ Attached	☐ Remote
☒ Light Source	Examination Location Description/Remarks	Remote Examination Conditions/Equipment Remarks	
☐ 6" Scale	Drywell Penetration X-51	N/A	
☐ Other			

Examination Results, Details and Comments:

Examined this penetration with no findings identified. Results are Satisfactory.

Examiner: Ralph Connell Level Responsible Engineer Date 1/15/01

Examiner: N/A Level N/A Date N/A

Reviewer: N/A Date N/A

Reviewer: N/A Date N/A

ANII: [illegible] Date 1-31-01

Data Sheet No: IWE-GV-392

Work Order No.: 00-005035

Procedure No/Rev.: PP 7024/0

Page 1 of 1 Date: 1/15/01

Vermont Yankee
Visual Examination Report Form for General Visual (IWE)

Component

Component ID: X-52 System: Drywell

Drawing No/Rev.: 5920-41 Location: External Surfaces

Visual Aids	Photo	Sketch	Method
☐ Binoculars	☒ None	☒ None	☒ Direct General
☐ Mirror	☐ Attached	☐ Attached	☐ Remote
☒ Light Source	Examination Location Description/Remarks		Remote Examination Conditions/Equipment Remarks
☐ 6" Scale	Drywell Penetration X-52		N/A
☐ Other			

Examination Results, Details and Comments:

Examination of this Penetration results in No findings. Results are Satisfactory.

Examiner: Ralph Connell Level Responsible Engineer Date 1/15/01

Examiner: N/A Level N/A Date N/A

Reviewer: N/A Date N/A

Reviewer: N/A Date N/A

ANII: [signature] Date 1-31-01

Data Sheet No: IWE-GV-400

Work Order No.: 00-00 5035

Procedure No/Rev.: PP 7024/0

Page 1 of 1 Date: 1/15/01

Vermont Yankee
Visual Examination Report Form for General Visual (IWE)

Component

Component ID: X-101 A, B, C, + D System: Drywell

Drawing No/Rev.: 5920-41 Location: External

Visual Aids	Photo	Sketch	Method
☐ Binoculars	☒ None	☒ None	☒ Direct General
☒ Mirror	☐ Attached	☐ Attached	☐ Remote
☒ Light Source	Examination Location Description/Remarks	Remote Examination Conditions/Equipment Remarks	
☐ 6" Scale	Drywell Penetrations X-101 A, B, C, D	N/A	
☐ Other			

Examination Results, Details and Comments:

Examined Penetrations X-101 A, B, C + D with no findings identified. Results are satisfactory.

Examiner: Ralph Connell Level Responsible Engineer Date 1/15/01

Examiner: N/A Level N/A Date N/A

Reviewer: N/A Date N/A

Reviewer: N/A Date N/A

ANII: [signature] Date 1-31-01

VYNEF 8047.06
NE 8047 Original
Page 1 of 1

Data Sheet No: IWE-GV-399

Work Order No.: 00-005035

Procedure No/Rev.: PP7024/0

Page 1 of 1 Date: 1/15/01

Vermont Yankee
Visual Examination Report Form for General Visual (IWE)

Component

Component ID: X-100 A, B, C, + D System: Drywell

Drawing No/Rev.: 5920-41 Location: External Surfaces

Visual Aids	Photo	Sketch	Method
☐ Binoculars	☒ None	☒ None	☒ Direct General
☒ Mirror	☐ Attached	☐ Attached	☐ Remote
☒ Light Source	Examination Location Description/Remarks	Remote Examination Conditions/Equipment Remarks	
☐ 6" Scale	Drywell Penetrations X-100 A, B, C + D	N/A	
☐ Other			

Examination Results, Details and Comments:

Removed debris from X-100 D. Examined Penetrations X-100 A, B, C, + D with no findings. Results are satisfactory.

Examiner: Ralph Connell Level Responsible Engineer Date 1/15/01

Examiner: N/A Level N/A Date N/A

Reviewer: N/A Date N/A

Reviewer: N/A Date N/A

ANII: [signature] Date 1-31-01

Data Sheet No: IWE-GV-390

Work Order No.: 00-005035

Procedure No/Rev.: PP 7024/0

Page 1 of 1 Date: 1/15/01

Vermont Yankee
Visual Examination Report Form for General Visual (IWE)

Component

Component ID: X-102 System: Dry well

Drawing No/Rev.: 5920-41 Location: External Surfaces

Visual Aids	Photo	Sketch	Method
☐ Binoculars	☒ None	☒ None	☒ Direct General
☒ Mirror	☐ Attached	☐ Attached	☐ Remote
☒ Light Source	Examination Location Description/Remarks	Remote Examination Conditions/Equipment Remarks	
☐ 6" Scale	Drywell Penetration X-102	N/A	
☐ Other			

Examination Results, Details and Comments:

Examination of this penetration results in no Findings. Results are satisfactory.

Examiner: [signature] Level Responsible Engineer Date 1/15/01

Examiner: N/A Level N/A Date N/A

Reviewer: N/A Date N/A

Reviewer: N/A Date N/A

ANII: [signature] Date 1-31-01

Data Sheet No: IWE-GU-391

Work Order No.: 00-005035

Procedure No/Rev.: PP 7024

Page 1 of 1 Date: 1/15/01

Vermont Yankee
Visual Examination Report Form for General Visual (IWE)

Component

Component ID: X-103 System: Drywell

Drawing No/Rev.: 5920-41 Location: External Surfaces

Visual Aids	Photo	Sketch	Method
☐ Binoculars	☒ None	☒ None	☐ Direct Not Performed,
☐ Mirror	☐ Attached	☐ Attached	☐ Remote In Accessible
☒ Light Source	Examination Location Description/Remarks		Remote Examination Conditions/Equipment Remarks
☐ 6" Scale	Drywell Penetration X-103		N/A
☐ Other			

Examination Results, Details and Comments:

The external surface of X-103 is not accessible for examination. No Examination was performed on the external surfaces. Access is blocked by Termination Box.

Examiner: Ralph Connell Level Responsible Engineer Date 1/15/01

Examiner: N/A Level N/A Date N/A

Reviewer: N/A Date N/A

Reviewer: N/A Date N/A

ANII: [signature] Date 1-31-01

VYNEF 8047.06
NE 8047 Original
Page 1 of 1

Vermont Yankee
Visual Examination Report Form for General Visual (IWE)

Data Sheet No: IWE-GV-401
Work Order No.: 00-005035
Procedure No/Rev.: PP 7024/0
Page 1 of 1 Date: 1/16/01

Component

Component ID: X-104 A, B, C System: Drywell
Drawing No/Rev.: 5920-41 Location: External

Visual Aids	Photo	Sketch	Method
☐ Binoculars	☒ None	☒ None	☒ Direct General
☒ Mirror	☐ Attached	☐ Attached	☐ Remote
☒ Light Source	Examination Location Description/Remarks	Remote Examination Conditions/Equipment Remarks	
☐ 6" Scale	Drywell Penetrations X-104 A, B, C.	N/A	
☐ Other			

Examination Results, Details and Comments:

Examined Penetrations X104 A, B + C with No findings identified. Results are Satisfactory

Examiner: Ralph Caswell Level Responsible Engineer Date 1/16/01
Examiner: N/A Level N/A Date N/A
Reviewer: N/A Date N/A
Reviewer: N/A Date N/A
ANII: [signature] Date 1-31-01

Data Sheet No: IWE-GV-402

Work Order No.: 00-005035

Procedure No/Rev.: PP 7024/0

Page 1 of 1 Date: 1/15/01

Vermont Yankee
Visual Examination Report Form for General Visual (IWE)

Component

Component ID: X-105 A, B, C + D System: Drywell

Drawing No/Rev.: 5920-41 Location: External

Visual Aids	Photo	Sketch	Method
☐ Binoculars	☒ None	☒ None	☒ Direct General
☒ Mirror	☐ Attached	☐ Attached	☐ Remote
☒ Light Source			
☐ 6" Scale			
☐ Other			

Examination Location Description/Remarks	Remote Examination Conditions/Equipment Remarks
Drywell Penetrations X-105 A, B, C, + D	N/A

Examination Results, Details and Comments:

Examined Penetrations X-105 A, B, C + D with no findings identified. Results are satisfactory.

Examiner: Ralph Connell Level Responsible Engineer Date 1/15/01

Examiner: N/A Level N/A Date N/A

Reviewer: N/A Date N/A

Reviewer: N/A Date N/A

ANII: V. Ryan Date 1-31-01

Data Sheet No: IWE-GV-389

Work Order No.: 00-005035

Procedure No/Rev.: PP 7024/0

Page 1 of 1 Date: 1/15/01

Vermont Yankee
Visual Examination Report Form for General Visual (IWE)

Component

Component ID: X-106 System: Drywell

Drawing No/Rev.: 5920-41 Location: External Surface

Visual Aids	Photo	Sketch	Method
☐ Binoculars	☒ None	☒ None	☒ Direct General
☒ Mirror	☐ Attached	☐ Attached	☐ Remote
☒ Light Source	Examination Location Description/Remarks		Remote Examination Conditions/Equipment Remarks
☐ 6" Scale	Drywell Penetration X-106		N/A
☐ Other			

Examination Results, Details and Comments:

Examination of this Penetration results in no findings. Results are satisfactory.

Examiner: Ralph Connell Level Responsible Engineer Date 1/15/01

Examiner: N/A Level N/A Date N/A

Reviewer: N/A Date N/A

Reviewer: N/A Date N/A

ANII: [illegible] Date 1-31-01

Data Sheet No: IWE-GV-388

Work Order No.: 00-005035

Procedure No/Rev.: PP 7024/0

Page 1 of 1 Date: 1/15/01

Vermont Yankee
Visual Examination Report Form for General Visual (IWE)

Component

Component ID: X-107 System: Drywell

Drawing No/Rev.: 5920-41 Location: External Surface

Visual Aids	Photo	Sketch	Method
☐ Binoculars	☒ None	☒ None	☒ Direct General
☒ Mirror	☐ Attached	☐ Attached	☐ Remote
☒ Light Source	Examination Location Description/Remarks	Remote Examination Conditions/Equipment Remarks	
☐ 6" Scale	Drywell Penetration X-107	N/A	
☐ Other			

Examination Results, Details and Comments:

Removed debris from bottom of Concrete sleeve. Examination of this Penetration results in No findings. Results are satisfactory.

Examiner: Ralph Connell Level Responsible Engineer Date 1/15/01

Examiner: N/A Level N/A Date N/A

Reviewer: N/A Date N/A

Reviewer: N/A Date N/A

ANII: [signature] Date 1-31-01

Vermont Yankee
Visual Examination Report Form
VT-1, Containment Surfaces (IWE)

Data Sheet No: 8045-01-011

Work Order No.: 00-004617-000

Procedure No/Rev.: NE 8045 / REV. 1

Page 1 of 2 Date: 5-3-01

Component ID: X-200A (SOUTH MANWAY - TORUS) System: TORUS

Drawing No/Rev.: G-191167 Rev. 0

Visual Aids			Illumination Level Check		
☑ Mirror	☐ Illumination Card/No. VY8			Time	Date
☑ Light Source (Flashlight)	☐ Other:		Initial 158	1:45 AM	5-4-01
Method	Photo	Sketch	Intermediate	NA	
☑ Direct	☑ None	☐ None	Intermediate	NA	
☐ Remote	☐ Attached	☑ Attached	Final 159	2:20 AM	5-4-01

Remote Examination Conditions/Equipment Remarks NA

	Acceptable	Recordable	N/A	Remarks/Observations
Cracks/Linears	WAS 5-3-01			28 OF 32 TACK WELDED
Physical Damage	WAS 5-3-01			NUTS UNDERSIDE OF FLANGE
Corrosion	WAS 5-3-01			IN TACT. 4 NUTS ie:
Erosion	WAS 5-3-01			"UNATTACHED" VT Reveals
Gouges	WAS 5-3-01			NO Residual TACK WELD
Wear	WAS 5-3-01			IN PLACE.
Arc Strikes	WAS 5-3-01			"SEE SKETCH"
Other (Explain)				

Examiner: [signature] Level: II Date: 5/4/01

Examiner: N/A Level: N/A Date: N/A

Reviewer: [signature] Date: 5/4/01

Reviewer: N/A Date: N/A

ANII: [signature] Date: 5-4-01

Evaluation Required? ☐ Yes ☑ No

Vermont Yankee
Visual Examination
Supplemental Report Form

Reference Data Sheet No: 8045-01-011
Page 2 of 2 Date: 5/4/01

Component

Component ID: X-200A System: TORUS

X-200A
So. MW TORUS

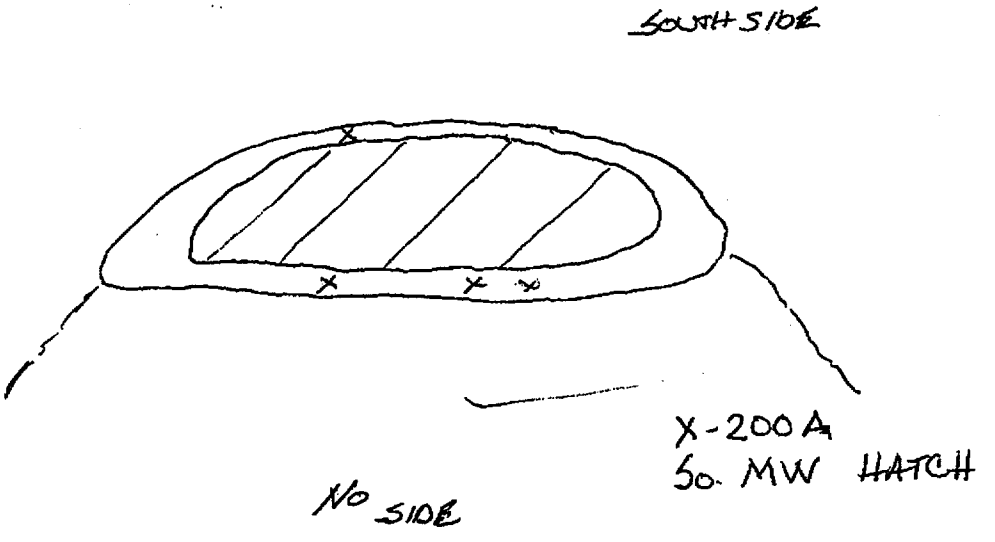

X = Represents Approximate Locations ie: UNDERSIDE NUTS NOT TACKED IN PLACE.

Examiner: [signature] II Level: II Date: 5-4-01
Examiner: N/A Level: N/A Date: N/A
Reviewer: [signature] Date: 5/4/01
Reviewer: N/A Date: N/A
ANII: [signature] Date: 5-4-1

Vermont Yankee
Visual Examination Report Form
VT-1, Bolting (IWE)

Data Sheet No: 8045-01-013
Work Order No.: 00-004617-.000
Procedure No/Rev.: NE 8045 / REV.1
Page 1 of 1 Date: 5-3-01

Component

Component ID: X-200A (SOUTH MANWAY TORUS) System: TORUS

Drawing No/Rev.: G-191167 REV.0 Bolting Length: 4 7/8" Bolting Diameter: 5/8"

Photo/Sketch	Method	Examination	Bolting Components Examined	
☑ None	☑ Direct	☐ In Place	☑ Bolting	☐ Washers
☐ Attached	☐ Remote	☑ Removed	☐ Bushings	☐ Flange Surface

Visual Aids

☐ Magnifying Glass ☑ Illumination Card/No.: YY8
☐ Mirror ☑ Light Source (Describe): FLASHLIGHT

Remote Examination Conditions/Limitations: NA

Illumination Level Check	Time	Date
Initial 225	11:20 PM	5/3/01
Intermediate	NA	–
Intermediate	NA	–
Final 223	1:10 AM	5/4/01
Lightmeter S/N: 812153		
Cal. Due Date: 4-13-02		

	Acceptable	Recordable	N/A	Remarks/Observations
Loose/Missing			WAS 5-3-01	Pkg. W.O. Page #5 Item -28
Thread Engagement			WAS 5-3-01	HEX HEAD A320 L7 @ 4½" L.
Thread Damage	WAS 5/3/01			ACTUAL COUNT IS 16:
Galling	WAS 5-3-01			32 HEX HEAD A320 L7 @
Coating Degradation			WAS 5-3-01	4 7/8 IN Length.
Bent/Twisted	WAS 5-3-01			
Physical Damage	WAS 5-3-01			
Fractured Parts	WAS 5-3-01			
Gouges	WAS 5-3-01			
Cracks/Linears	WAS 5-3-01			
Corrosion	WAS 5-3-01			
Erosion	WAS 5-3-01			
Wear	WAS 5-3-01			
Evidence of Leakage			WAS 5-3-01	
Other (Explain)			WAS 5-3-01	

Examiner: William A. Stell Level: II Date: 5-4-01
Examiner: N/A Level: N/A Date: N/A
Reviewer: [signature] Date: 5/4/01
Reviewer: N/A Date: N/A
ANII: [signature] Date: 5-4-01

Evaluation Required?
☐ Yes ☑ No

Vermont Yankee
Visual Examination Report Form
VT-1, Bolting (IWE)

Data Sheet No: 8045-01-015
Work Order No.: 00-004618-000
Procedure No/Rev.: NE 8045 Rev. 0
Page 1 of 1 Date: 5-5-01

Component

Component ID: TORUS MANWAY NORTH X-200B System: PRIMARY CONTAINMENT

Drawing No/Rev.: 9-6202 Rev. 0 Bolting Length: N/A " Bolting Diameter: 5/8 "

Photo/Sketch	Method	Examination	Bolting Components Examined	
■ None	■ Direct	☐ In Place	■ Bolting	☐ Washers
☐ Attached	☐ Remote	■ Removed	☐ Bushings	☐ Flange Surface

Visual Aids

☐ Magnifying Glass ■ Illumination Card/No.: VY8
■ Mirror ■ Light Source (Describe): FLASHLIGHT

Remote Examination Conditions/Limitations:

Illumination Level Check	Time	Date
Initial 133FC	7:10AM	5-5-01
Intermediate	N/A	N/A
Intermediate	N/A	N/A
Final 98FC	8:05AM	5-5-01

Lightmeter S/N: 812153
Cal. Due Date: 4-13-02

	Acceptable	Recordable	N/A	Remarks/Observations
Loose/Missing	J.E. 5-5-01			VERIFIED 32 - 5/8" HEAVY
Thread Engagement			J.E. 5-5-01	Hex Nuts, welded to the
Thread Damage	J.E. 5-5-01			bottom side of the man-
Galling	J.E. 5-5-01			way flange. ALL NUTS
Coating Degradation	J.E. 5-5-01			ARE COATED with paint.
Bent/Twisted	J.E. 5-5-01			Jed El-Hajj: 5-5-01
Physical Damage	J.E. 5-5-01			
Fractured Parts	J.E. 5-5-01			
Gouges	J.E. 5-5-01			
Cracks/Linears	J.E. 5-5-01			
Corrosion	J.E. 5-5-01			
Erosion	J.E. 5-5-01			
Wear	J.E. 5-5-01			
Evidence of Leakage	J.E. 5-5-01			
Other (Explain)			J.E. 5-5-01	

Examiner: Jed El-Hajj Level: II Date: 5-5-01
Examiner: N/A Level: N/A Date: N/A
Reviewer: Ralph Cameron Date: 5/5/01
Reviewer: N/A Date: N/A
ANII: M S Nelson Date: 5-5-01

Evaluation Required?
☐ Yes ☒ No

Vermont Yankee
Visual Examination Report Form
VT-1, Bolting (IWE)

Data Sheet No: 8045-01-012
Work Order No.: 00-004618-000
Procedure No/Rev.: NE8045 REV. 1
Page 1 of 1 Date: 5-3-01

Component

Component ID: TORUS MANWAY North X-200B System: TORUS

Drawing No/Rev.: 9-6202 Rev. 0 Bolting Length: CAPSCREW 4 1/2" Bolting Diameter: 5/8"

Photo/Sketch	Method	Examination	Bolting Components Examined	
■ None	■ Direct	☐ In Place	■ Bolting	☐ Washers
☐ Attached	☐ Remote	■ Removed	☐ Bushings	☐ Flange Surface

Visual Aids

☐ Magnifying Glass ■ Illumination Card/No.: VY8
☐ Mirror ■ Light Source (Describe): Flashlight

Remote Examination Conditions/Limitations: N/A

Illumination Level Check	Time	Date
Initial PRE 228	3:45	5-3-01
Intermediate	N/A	N/A
Intermediate	N/A	N/A
Final POST 222	4:50	5-3-01

Lightmeter S/N: 812153
Cal. Due Date: 4-13-02

	Acceptable	Recordable	N/A	Remarks/Observations
Loose/Missing			J.E. 5-3-01	VERIFIED: 32, 5/8"Ø X 4 1/2" Lg. X
Thread Engagement			J.E. 5-3-01	11 TPI. ASTM A320 Gr. L7
Thread Damage	J.E. 5-3-01			HEX HEAD Cap Screws.
Galling	J.E. 5-3-01			MFG. I.D. 1.
Coating Degradation			J.E. 5-3-01	
Bent/Twisted	J.E. 5-3-01			
Physical Damage	J.E. 5-3-01			
Fractured Parts	J.E. 5-3-01			
Gouges	J.E. 5-3-01			
Cracks/Linears	J.E. 5-3-01			
Corrosion	J.E. 5-3-01			
Erosion	J.E. 5-3-01			
Wear	J.E. 5-3-01			
Evidence of Leakage			J.E. 5-3-01	
Other (Explain)			J.E. 5-3-01	

Examiner: Ted El-Hajj Level: II Date: 5-3-01
Examiner: N/A Level: N/A Date: N/A
Reviewer: [signature] Date: 5/4/01
Reviewer: N/A Date: N/A
ANII: [signature] Date: 5-4-01

Evaluation Required?
☐ Yes ■ No

Data Sheet No: IWE-GV-397

Work Order No.: 00-005035

Procedure No/Rev.: PP 7024/0

Page 1 of 1 Date: 1/16/01

Vermont Yankee
Visual Examination Report Form for General Visual (IWE)

Component

Component ID: X-201 A thru H System: Torus

Drawing No/Rev.: 6202-200 Location: Exterior Surfaces

Visual Aids	Photo	Sketch	Method
☐ Binoculars	☒ None	☒ None	☒ Direct General
☐ Mirror	☐ Attached	☐ Attached	☐ Remote
☒ Light Source	Examination Location Description/Remarks	Remote Examination Conditions/Equipment Remarks	
☐ 6" Scale	Torus Penetrations X-201 A, B, C, D, E, F, G, H	N/A	
☐ Other			

Examination Results, Details and Comments:

Performed General Visual Examinations on external surfaces of all X-201 penetrations with no findings. Satisfactory

Examiner: Ralph Connell Level Responsible Engineer Date 1/16/01

Examiner: N/A Level N/A Date N/A

Reviewer: N/A Date N/A

Reviewer: N/A Date N/A

ANII: [signature] Date 1-31-01

VYNEF 8047.06
NE 8047 Original
Page 1 of 1

Data Sheet No: INE-GV-396

Work Order No.: 00-005035

Procedure No/Rev.: PP 7024/0

Page 1 of 1 Date: 1/16/01

Vermont Yankee
Visual Examination Report Form for General Visual (IWE)

Component

Component ID: X-203 A thru F System: Torus

Drawing No/Rev.: 6202-200 Location: External Surfaces

Visual Aids	Photo	Sketch	Method
☐ Binoculars	☒ None	☒ None	☒ Direct General
☐ Mirror	☐ Attached	☐ Attached	☐ Remote
☒ Light Source	Examination Location Description/Remarks	Remote Examination Conditions/Equipment Remarks	
☐ 6" Scale	Torus Penetrations X-203 A, B, C, D, E, F	N/A	
☐ Other			

Examination Results, Details and Comments:

Performed General Visual Examination on external Surfaces of X 203 A thru F penetrations with No Findings, Satisfactory

Examiner: Ralph Connell Level Responsible Eng. Dept. Date 1/16/01

Examiner: N/A Level N/A Date N/A

Reviewer: N/A Date N/A

Reviewer: N/A Date N/A

ANII: [signature] Date 1-31-01

Data Sheet No: IWE-GV-395

Work Order No.: 00-005035

Procedure No/Rev.: PP 7024/0

Page 1 of 1 Date: 1/16/01

Vermont Yankee
Visual Examination Report Form for General Visual (IWE)

Component

Component ID: X-203 G + H System: Torus

Drawing No/Rev.: 6202-200 Location: External Surfaces

Visual Aids	Photo	Sketch	Method
☐ Binoculars	☒ None	☒ None	☒ Direct General
☐ Mirror	☐ Attached	☐ Attached	☐ Remote
☒ Light Source	Examination Location Description/Remarks	Remote Examination Conditions/Equipment Remarks	
☐ 6" Scale	Torus Penetrations X 203 G + H	N/A	
☐ Other			

Examination Results, Details and Comments:

Performed General Visual Examinations on external surfaces of X 203 G + H penetrations with no Findings. Satisfactory

Examiner: Ralph Connell Level Responsible Engineer Date 1/16/01

Examiner: N/A Level N/A Date N/A

Reviewer: N/A Date N/A

Reviewer: N/A Date N/A

ANII: [illegible] Date 1-31-01

Data Sheet No: 8047-01-32

Work Order No.: 00-5037

Procedure No/Rev.: 8047 R0

Page 1 of 1 Date: 5/1/01

Vermont Yankee
Visual Examination Report Form for General Visual (IWE)

Component

Component ID: X-207 A, B, C, D, E, F, G, & H System: Torus/Drywell

Drawing No/Rev.: 5920-42 Location: Vent Header

Visual Aids	Photo	Sketch	Method
☐ Binoculars	☒ None	☒ None	☒ Direct General
☐ Mirror	☐ Attached	☐ Attached	☐ Remote
☒ Light Source	Examination Location Description/Remarks	Remote Examination Conditions/Equipment Remarks	
☐ 6" Scale	Internal Exam From Vent Header Interior	N/A	
☐ Other			

Examination Results, Details and Comments:

The internal surface of all 8 X-207 penetrations have general corrosion with metal loss. Maximum metal loss estimated .025".

See IDR 01-08

Examiner: Ralph Cowell Level Asp Eng. Date 5/1/01

Examiner: Dennis Kinsin Level Ranking Date 5/1/01

Reviewer: DC Kinsin Date 5/1/01

Reviewer: NA Date NA

ANII: [illegible] Date 5-2-01

INSERVICE DISCREPANCY REPORT (IDR)

IDR #: 01-08

Date: 5/2/2001

Component: X-207A - H

Location: Drywell

Discrepancy: General corrosion with metal loss ~~in excess of~~ No Allowable values provided by Design Engineering. All corrosion areas have lost all coating coverage. See attached Report (General Visual) # 8047-01-32 DAH 5/2/01

ISI Supervisor: D Gilmore Date: 5/2/01

System Operability Affected: YES ___ NO X BY: DCO Date: 5/2/01

Shift Supervisor Notified: YES ___ NO X BY: DCO Date: 5/2/01

Event Report Initiated: YES ___ NO X BY: DCO Date: 5/2/01

Mechanical Design Engineering Evaluation: _____

Performed By: _____ Date: _____

Disposition/Repair: _____

ISI Program Coordinator: _____ Date: _____

Repair Effort:

Reference Document: _____

Repair Completion Date: _____

Service Induced: YES ___ NO ___ BY: ___ Date: ___

Sample Expansion Required: YES ___ NO ___ BY: ___ Date: ___

Sample Expansion: _____

ISI Program Coordinator: _____ Date: _____

Reinspection Required: YES ___ NO ___ BY: ___

Subsequent Inspection Required: YES ___ NO ___ BY: ___

ISI Supervisor Notified:

ISI Program Coordinator: _____ Date: _____

Reinspection Completed Satisfactorily:

ISI Supervisor: _____ Date: _____

IDR Closed:

ISI Program Coordinator: _____ Date: _____