VY CALCULATION TITLE PAGE

VYC-1032	REVISION 1	N/A	N/A
VY Calculation Number	Revision Number	Vendor Calculation Number	Revision Number

Title: **TORUS SHELL & VENT SYSTEM THICKNESS REQUIREMENTS**

QA Status: X NS __ NNS __ OQA

Calculation Supports A Design Change/Specification? __Yes X No N/A
VYDC/MM/TM/Spec No.

Calculation Supports An Independent Analysis? __Yes X No N/A
Reference

Calculation Done as a Study Only? __Yes X No

Safety Evaluation Number: N/A

Superseded Calculation Number, Title and Revision: VYC-1032, "TORUS SHELL & VENT SYSTEM THICKNESS REQUIREMENTS, Revision 0

Review and Approval: (Print and Sign Name)

Preparer: James C. Fitzpatrick Date: 11/21/99

Interdiscipline Reviewer(s): N/A Date:

Independent Reviewers(s): William J.Duffy Date: 11/21/99

Approved: Scott D.Goodwin Date: 11/23/99

Open Items Associated with Calculation? __Yes X No __ Closed

Installation Verification

__Calculation accurately reflects plant as-built configuration, OR
X N/A, calculation does not affect plant configuration

James C. Fitzpatrick		11/21/99
Printed Name	Signature	Date

VY CALCULATION DATABASE INPUT FORM

__VYC-1032_____ _____1_____ _____N/A_____ ____N/A_____
VY Calculation/CCN Number Revision Number Vendor Calculation Number Revision Number

Vendor Name:_____N/A_____ PO Number:_____N/A_____

Calculation Type (Originating Department):_Mechanical/Structural__ Implementation Required? __Yes _X_ No

Asset/Equipment ID Number(s):___Primary Containment_____

Asset/System ID Number(s):_____

Keywords:_Torus, Primary Containment, Torus, ASME Section XI IWE Inspection, Corrosion_____

General References

REF. #	Reference Title (including Rev. No. and Date, if applicable) (See App. A, Section 3.1.7 for Guidance)	Critical Reference (X)
1	Vermont Yankee Event Report No. 97-0307, dated 3/13/97, Torus Shell Corrosion [Evaluation Did Not Consider Design Pressure]. (Included as Attachment F to this calculation.)	
2	ASME Section III Nuclear Vessels, 1965 (with Winter 1965 Addenda) and ASME Section VIII, Unfired Pressure Vessels, 1965.	
3	Design Specification for Vermont Yankee Reactor Containment, No. 22A1265, Revision No. 1, by General Electric Nuclear Energy Division.	
4	Purchase Specification for Vermont Yankee Drywell and Suppression Chamber Containment Vessels, No. 21A5837, Revision No. 3, by General Electric Nuclear Energy Division.	
5	Certified Stress Report, Vernon – II, Vermont Yankee Project Containment Vessel, No. 9-6202-II, October 29,1968, by Chicago Bridge & Iron –Oak Brook Engineering.	
6	NUREG-0661, Supplement 1, Mark I Containment Long Term Program, August 1992.	
7	ASME XI, Subsection IWE, Requirements for Class MC and Metallic Liners of Class CC Components of Light-Water Cooled Plants, 1992 Edition with 1992 Addenda.	
8	Chicago Bridge &Iron Drawings for Vermont Yankee: No. 6202-001,Rev.1 ,Pressure Suppression Containment Vessel Arrangement & Field Assembly. No. 6202-200, Rev.0, Suppression Chamber - General Arrangement & Field Assembly.	
9	Stress Concentration Factors, by R.E.Peterson , published by John Wiley &Sons, New York, Copyright 1974.	
10	Vermont Yankee Drawing No. G191175 Sh.1/2, Revision 61, "Flow Diagram Primary Containment & Atmospheric Control System".	
11	Vermont Yankee ASME Section XI, Subsection IWE, Report on Evaluation of 1998 Torus Inspections, November 1999.	
12	Vermont Yankee Program Procedure "Containment Inservice Inspection Program (IWE)", No. PP7024, Original Issue September 30,1999.	

Design Input Documents - The following documents provide design input to this calculation.

Document Number & Title (including Rev. No. and Date, if applicable)	Critical Reference (_)
Design Specification for Vermont Yankee Reactor Containment, No. 22A1265, Revision No. 1, by General Electric Nuclear Energy Division.	
Purchase Specification for Vermont Yankee Drywell and Suppression Chamber Containment Vessels, No. 21A5837, Revision No. 3, by General Electric Nuclear Energy Division.	
Certified Stress Report, Vernon – II, Vermont Yankee Project Containment Vessel, No. 9-6202-II, October 29,1968, by Chicago Bridge & Iron –Oak Brook Engineering.	
VY Dwg. No. 6202-001, Revision 1, Pressure Suppression Containment Vessel Arrangement & Field Assembly.	

Design Output Documents - This calculation provides output to the following documents.

Document #	Document Title	Critical Reference (_)
	NONE	

VYC –1032, Revision 1

This calculation is revised in entirety. All applicable pages from Revision 0 have been retained and renumbered as required.

INTRODUCTION & REASON FOR REVISION

VY Event Report 97-0307 was written to identify that Revision 0 of this calculation did not consider the American Society of Mechanical Engineers (ASME) code design pressure for the containment. Revision 0 was based on the maximum sustained pressure from the design basis accident, not the ASME code design pressure.

The Torus was modified under the Mark I Torus Containment Program for hydrodynamic forces associated with the design basis accident (DBA). The maximum DBA containment pressure is 44. Psi. which is less than the ASME code design pressure of 56 Psi.

The Teledyne Engineering Services (TES) analyses of record for the Mark I program used full wall thickness properties. Attachments A to E of this calculation were developed by TES to calculate margins in the Mark I analyses and to determine minimum shell and vent header piping thickness requirements for the Mark I program loads. This work was performed by TES under Yankee Atomic Electric Co. (YAEC) P.O. QA41434. The resulting documents were assembled and given a VYC number (VYC-1032, Rev.0) for inclusion into the YAEC document control system (DCC). The TES calculations and appropriate engineering reviews were performed under the TES Quality Assurance program with subsequent reviews performed by the YAEC VY Project – Mechanical Engineering Group in accordance with the requirements of YAEC Engineering Instruction WE-103. YAEC comments on the original issues of Attachments A to D were satisfactorily incorporated into the TES reports and calculations.

TES demonstrated significant margin for corrosion exists on the Torus external shell for the Mark I Program Loads and accident pressures. However, the general external shell stress conditions under the 56 psi. design pressure are much higher than shell stresses under the Mark I Program loads.

VY Commitment Item No. ER970307_01 requires that the thickness of the Torus bottom plate sections and geometries of concern be programmatically determined and based on the results, that VYC-1032 Revision 0 be revised as appropriate. This revision addresses the 56 psi. design vs. the 44 psi. maximum accident pressure and the continued applicability of the TES developed methodology and criteria.

CALCULATION OBJECTIVE

The objective of this calculation is to address the effects of the 56 Psi. ASME code design pressure vs. using the maximum accident pressure of 44 Psi. in developing the Torus shell and vent system thickness requirements.

DESIGN CRITERIA / ANALYSIS INPUTS

The Vermont Yankee Torus is Safety Class 2 (Reference 10, Dwg. G191175 Sh.1/2)

The original construction code for the Torus and containment was for a type B vessel in accordance with ASME Section III, 1965 edition with Addenda to Winter of 1965 (References 3, 4, & 5). Paragraph N-1111 in this edition of Section III specifies the rules of Division 1 of Section VIII (with exceptions) shall apply to the design, fabrication, inspection, testing, and certification of Class B vessels.

Also Paragraph N-1314(a) requires that the requirements of Paragraphs N-414.1 to N-414.4 be met for the stress values specified in Paragraph N-1314(b). The stress intensity values (S_m) used are the allowable stress values at design temperature as tabulated in Division I of Section VIII.

The Torus was subsequently modified under NUREG-0661 requirements with design in accordance with selected requirements of ASME Section III, Subsections NC, NE, and NF, 1977 Edition with the Summer Addenda.

The internal design pressure is 56. Psi., and the external design pressure is 2 Psi., references(3, 5, & 8).

Per reference 8, the Torus bottom is constructed of SA516 Gr.70 (FBX to A300) steel plate. The plates have specified minimum tensile strength of 70,000 Psi. and a minimum yield strength of 38,000 Psi. The welds are 100% radiographed. Per reference 5, the allowable stress value (and allowable stress intensity) at design temperature (281F) is 17,500. Psi.

DESIGN CRITERIA - CONTINUED.
COMPARISON OF CRITERIA USED IN CB&I DESIGN AND TES MARK I ANALYSES FOR GENERAL SHELL STRESSES.

CB&I (REF 5) CLASS B VESSELS	TES (ATTACHMENT B) MARK I PROGRAM. ASME III 1977
GENERAL PRIMARY MEMBRANE STRESS (P_m) (ASME III 1965 N414.1)	SERVICE LEVEL A & B (TYPICAL)
$P_m < S$	$P_m < S_{mc}$
S = MAXIMUM ALLOWABLE FROM ASME SECTION VIII = 17,500 PSI	S_{mc} = STRESS INTENSITY FROM ASME III = 19,300 PSI
LOCAL MEMBRANE STRESS INTENSITY (P_L) (ASME III 1965 N414.2)	
$P_L < 1.5S$ = 26,250 PSI	$P_L \leq 1.5S_{mc}$ = 28,950 PSI
PRIMARY MEMBRANE (GENERAL OR LOCAL) PLUS PRIMARY BENDING STRESS INTENSITY. (ASME III 1965 N414.3)	
$P_m(\text{OR } P_L) + P_b < 1.5S$	$P_m(\text{OR } P_L) + P_b \leq 1.5S_{mc}$
PRIMARY PLUS SECONDARY STRESS INTENSITY (ASME III 1965 N414.4)	
$P_m(\text{OR } P_L) + P_b + Q < 3S$ = 52,500 PSI	$P_m(\text{OR } P_L) + P_b + Q < 3S_{mc}$ = 57,900 PSI
PEAK STRESS INTENSITY $P_m(\text{OR } P_L) + P_b + Q + F < S_{cu}$	(TYPICALLY NOT USED BY TES FOR TORUS SHELL & VENT SYSTEM.

ASSUMPTIONS

1. 100 full DBA cycles (from negative 2 Psi. to the design pressure of 56.0 Psi.) will be used to evaluate peak stresses. This includes Type A containment pressure tests and should envelope the initial pressure test. 100 cycles would represent approximately 2.5 tests per year over the 40 year life of the plant. The evaluation for pits and surface defects in the calculation section of this calculation demonstrates that there is significant margin in both the number of alternating stress cycles and in the magnitude of the alternating stresses evaluated. The assumption is valid and sufficient for the purposes of this calculation.

METHOD OF SOLUTION

To address the differences in internal pressure as defined in Vermont Yankee Event Report No. 97-0307 the following was performed.

- Determine the differences in the ASME code design requirements, acceptance criteria, and the loads used (design pressure, etc.) between the original design report reference(5) and the TES Mark I program evaluations contained in Revision 0 to this calculation.

- Develop acceptance criteria for general wall loss due to corrosion and/or wear based on the original design code requirements, primarily the 56. Psi design pressure.

- Perform a generic evaluation of pitting and surface effects and develop methods for evaluation of localized wall loss below the general wall loss criteria. The methods will be based on the 56. Psi design pressure and are to be in conformance with the original design code and accepted engineering practice.

- Determine if the TES methodology for evaluation of localized wall loss from ~~Reference~~ revision 0 of this calculation can be modified to reflect differences in internal pressure and code requirements between the original design and the Mark I program. If so, convert the TES methodology for evaluation of localized wall loss for the Torus external shell such that it is in conformance with the original design code and design pressures. MJD 11/21/99

- Assess the calculations from the original design report, reference(5), and the TES evaluations in ~~Reference~~ revision 0 of this calculation for the vent pipes, vent header, and the downcomers for applicability and conformance with the original design code and design pressures. MJD 11/21/99

CALCULATION

The ASME code minimum wall thickness of the Torus bottom plates was calculated by Chicago Bridge and Iron (CB&I) in reference(5), page 2C-3. Calculations for the Torus bottom plate thickness include the hydrostatic head of approximately 12.9 Ft. of water. This results in a maximum internal pressure of 62. Psi. at the bottom centerline.

From reference(5), page 2C-3, the code minimum wall thickness is 0.584 inches at the bottom centerline, and 0.533 inches above the water surface.

These minimum wall thickness values are the thickness values shown on the design drawings, reference(8). No allowance for corrosion was included. The plates for the Torus bottom half are specified as 0.584 inches thick with 0.00 inches for a corrosion allowance.

From ASME VIII 1965 Paragraph UG-16(c), the permissible mill under-tolerance for the exterior shell plates to allow for use of the full design pressure is the smaller of 0.01 inch or 6 percent of the ordered thickness. This results in a minimum acceptable wall thickness at the bottom center of 0.574". Likewise for the top half plates, the specified thickness is 0.533 inches resulting in a minimum acceptable thickness of 0.523 inches above the water line.

The top plates are sized for a constant pressure of 56 Psi. above the water line. The bottom plates are sized for the constant design pressure of 56 Psi. plus the hydrostatic pressure at the bottom centerline. At elevations between the water surface and the bottom, the maximum pressure varies with the height of water above the location.

Using the same design equations as reference(5) page 2C-3 and accounting for the variation in pressure with height of water, the code minimum wall thickness for locations on the shell between bottom dead center and the water surface can be determined as shown on the next pages.

CALCULATION:
ELEVATION THROUGH TORUS BOTTOM HALF

REF. & DWGS:
6202-001
6202-200

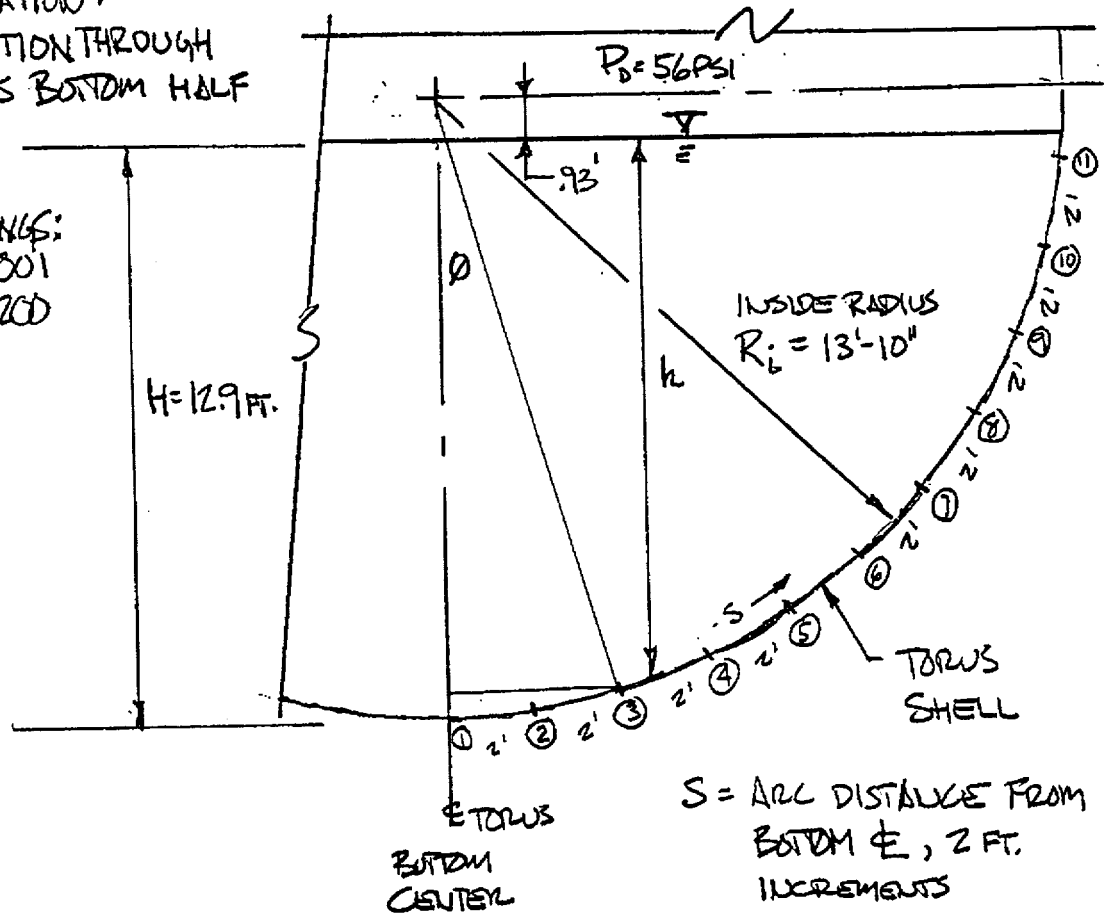

H = MAX. HEIGHT OF WATER FROM CB&I DESIGN REPORT (PG 2C-3)
H = 12.9 FT.

γ = WATER DENSITY = 62.4 LB/FT^3

h = HEIGHT OF WATER ABOVE POINT

P_d = DESIGN PRESSURE = 56. PSI

PRESSURE @ BOTTOM ℄ = P_d + HYDROSTATIC HEAD OF 12.9 FT OF H_2O

PRESSURE AT ANY LOCATION ON SHELL =

$$P_i = 56\,\text{PSI} + h\gamma\left(\frac{1}{144}\frac{\text{FT}^2}{\text{IN}^2}\right)\ \text{PSI}$$

CALCULATION

Internal Pressure

Code Minimum Wall Thickness (ASME VIII 1965,UG-27)

$$T\ min = \frac{PR}{SE-.6P}$$

Reference 5., Page 2C-3

S = 17,500. Psi.
R = 13'=10" = 166"

General Shell Thickness

POINT	S (Ft.)	THETA (rad)	COSINE THETA	h (Ft.)	Pressure (Psi.)	CODE MIN. WALL (inch)	ACCEPTANCE CRITERIA (inch)
1	0	0.0000	1.0000	12.90	61.6	0.585 *	0.575 *
2	2	0.1446	0.9896	12.76	61.5	0.585 *	0.575 *
3	4	0.2892	0.9585	12.33	61.3	0.583	0.573
4	6	0.4338	0.9074	11.62	61.0	0.580	0.570
5	8	0.5785	0.8373	10.65	60.6	0.576	0.566
6	10	0.7231	0.7498	9.44	60.1	0.571	0.561
7	12	0.8677	0.6466	8.01	59.5	0.565	0.555
8	14	1.0123	0.5299	6.40	58.8	0.559	0.549
9	16	1.1569	0.4022	4.63	58.0	0.551	0.541
10	18	1.3015	0.2660	2.75	57.2	0.544	0.534
11	20	1.4461	0.1243	0.79	56.3	0.535	0.525

Note: Figures 6 & 7 in Attachment A to this Calculation are NO LONGER VALID. Use this Table for General Shell Thickness Limits.

S = Arc Distance from Torus Bottom C.L.
ACCEPTANCE CRITERIA is CODE MIN. WALL less plate mill under tolerance = 0.01"

* Note on Code min. wall: Reference 5, CB&I report shows 0.584" for bottom center required minimum wall vs. 0.585" from table above. Calculations by CB&I were performed in 1967 using slide rule accuracy. The code provisions were also developed during that time frame considering typical hand calculation accuracy. The 0.584 and 0.585 numbers are essentially the same for design purposes.

USE THE MINIMUM WALL THICKNESS CALCULATED BY CB&I FOR EVALUATION OF THE TORUS SHELL.

T min at bottom center = 0.584", Acceptance Criteria = .584"- .01" = 0.574"

T min above water line = 0.533", Acceptance Criteria = .533"- .01" = 0.523"

VERMONT YANKEE DESIGN ENGINEERING CALC. NO. VYC1032 REV. 1 DATE 10/20/99

TITLE TORUS VENT & SHELL THICKNESS REQUIREMENTS (CCN# = N/A)

PREPARED BY JCFTE REVIEWED BY WJD PAGE 11 OF

CALCULATION:

CHECK TO SEE IF EXTERNAL PRESSURE CONTROLS CODE MINIMUM WALL REQUIREMENTS.

USING ASME VIII 1965 PARAGRAPH UG-28 (REF 2)

EXTERNAL DESIGN PRESSURE = 2.0 PSI (DWG. 6202-001 & 6202-200)
@ 281°F

t_{min} TOP PLATES = 0.533" (FOR INTERNAL PRESSURE = 56 PSI.)

D_o = O.D = 27'-8" + 2(.533") = 333.07 INCH

L = ℄ DIST. BETWEEN MIDDLE JOINTS/RING GIRDERS

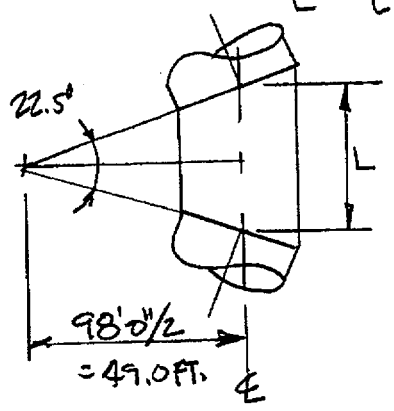

$$\frac{(L/2)}{49.0\,FT} = \tan 11.25^\circ$$

$$L = 2(49)\tan 11.25^\circ = 19.49\ FT.$$
℄ LENGTH

$$L/D_o = \frac{(19.49)(12)}{333.07} = .702$$

$$D_o/t = \frac{333.07}{.533} = 625$$

USING FIG UCS-28.2 WITH L/D_o & D_o/t ABOVE
(APPENDIX V OF ASME VIII)

B = 1900

$$P_a = \frac{B}{D_o/t} = \frac{1900}{333.07/.533} = 3.04\ PSI > 2.0\ PSI$$ EXTERNAL DESIGN

∴ INTERNAL PRESSURE CONTROLS MINIMUM WALL THICKNESS.

CALCULATION - continued

TORUS SHELL - LOCALIZED THINNING

The methodology for evaluation of localized thinning performed by TES in Attachments A to E (as documented in Revision 0 of this calculation) is based on detailed structural analyses using finite element codes and the more complex Mark I loads. The technical adequacy of their methodology is not in question. However, the maximum pressures used and the differences the associated allowable stresses preclude direct use of the TES methodology and results. The TES Methodology may be applicable with some modifications. This will be investigated below.

Using the original design code (ASME III 1965), local areas of thinning and/or pitting can be evaluated using the as found geometry and evaluating the thinned area as a local structural discontinuity. The requirements of ASME III Paragraphs N-414.1 to N-414.4 are to be met for the stress values specified in Paragraph N-1314(b). The stress intensity values (S_m) used are the allowable stress values at design temperature as tabulated in Division I of Section VIII.

Also using guidance from ASME VIII Paragraph UG-36 "Openings and Reinforcements", UG-36(3)(a): Single openings in vessels not subject to rapid pressure fluctuations do not require reinforcement if they are 2 inches in diameter or less for shell thickness more than 3/8 inches.

Given the infinite variations in area and thickness of possible corroded geometries. A limited number of approximate thinned wall geometry's will be evaluated. These will serve as generic examples and should suffice to bound the majority of situations encountered during future inspections.

First, a lower threshold to be used as a screening criteria (acceptable size and area of wall loss without further evaluation) for use by the inspection personnel will be developed (a.k.a. "Pre-Evaluated Criteria"). This will apply primarily to minor pitting and surface effects.

Second, a simplified method for evaluation of relatively small areas with localized wall of less than about 20 percent of nominal wall, with smooth transitions back to full wall thickness will be developed.

Third, the applicability of the TES methodology with some modifications to reflect the 56 Psi. design pressure and differences in allowable stresses used in different years of the ASME code will be presented.

And Fourth: Any rational engineering analysis which can accurately calculate membrane and bending stresses in the Torus shell at the location of wall loss for comparison with the ASME code allowable stress intensities is acceptable. Possible methods include but are not limited to a specific finite element analysis of the corroded geometry, a tailored application of the TES generic stress calculations contained in Attachment B of this calculation, and comparison to previous analyses.

CALCULATION: LOCAL THINNING

TORUS SHELL

PER SECTION NA12(j) OF ASME III 1965

"A STRESSED REGION CAN BE CONSIDERED AS LOCAL IF IT DOES NOT EXTEND IN THE MERIDIONAL DIRECTION MORE THAN $0.5\sqrt{Rt}$ AND IF IT IS NOT CLOSER IN THE MERIDIONAL DIRECTION THAN $2.5\sqrt{Rt}$ TO ANOTHER REGION WHERE THE LIMITS OF GENERAL PRIMARY MEMBRANE STRESS ARE EXCEEDED, ..."

R_m = MEAN RADIUS OF VESSEL

$R_{BOTTOM} = 13'-10" + .584/2 = 166.292$

$R_{TOP} = 13'-10" + .533/2 = 166.266$ USE 166.28"

@BOTTOM

$$0.5\sqrt{R_m t} = 0.5\sqrt{(166.28)(.584)} = 4.93"$$ { MERIDIONAL DIRECTION IS THE LONGITUDINAL DIRECTION.

$$2.5\sqrt{R_m t} = 24.64"$$

"PEAK STRESSES" AS DEFINED IN N-412(k) - BASIC CHARACTERISTIC OF A PEAK STRESS IS THAT IT DOES NOT CAUSE ANY NOTICEABLE DISTORTION AND IS OBJECTIONABLE ONLY AS A POSSIBLE SOURCE OF A FATIGUE CRACK OR A BRITTLE FRACTURE. IT IS AN INCREMENT OF STRESS WHICH IS ADDITIVE TO THE PRIMARY AND/OR SECONDARY STRESS BY REASON OF A CONCENTRATION (NOTCH) OR A LOCALIZED THERMAL STRESS.

EVALUATION OF PITS:

DIFFERENT DIAMETER & DEPTH PITS WILL BE EVALUATED AT THE TORUS BOTTOM CENTER LINE.

CALCULATION: LOCAL THINNING

LOCAL PITTING:

@ TORUS BOTTOM & $P = 61.6$ PSI, $t = t_{nom} = .584''$ $R_i = 166.$ IN

MEMBRANE STRESSES. $\sigma_1 = \sigma_{HOOP} \cong \frac{PR_i}{t} = \frac{61.6(166.)}{.584} = 17,510.$ PSI.

$\sigma_2 = \sigma_{LONG} \cong \frac{PR_i}{2t} = \frac{17,510.}{2} = 8756$ PSI.

$\sigma_3 = \sigma_{RADD} \cong P/2 = 62/2 = 31.$ PSI ($\cong P/2$ @ MID PLANE)

MAX (P_m) STRESS INTENSITY $= \sigma_1 - \sigma_3 = 17,479.$ PSI.

PITTING IS A SURFACE EFFECT IF THE AREA EXTENT AND LIMITED DEPTH DOES NOT AFFECT THE GENERAL MEMBRANE STRESS IN THE AREA.

THERE IS A STRESS CONCENTRATION AT THE PIT (OR NOTCH) LOCATION THE STRESS CONCENTRATION FACTOR K_t CAN BE ESTIMATED FROM REFERENCE 9.

REF 9; FIG 15 FOR AN ELIPTICAL-OR U SHAPED NOTCH IN A SEMI-INFINITE PLATE.

σ = STRESS

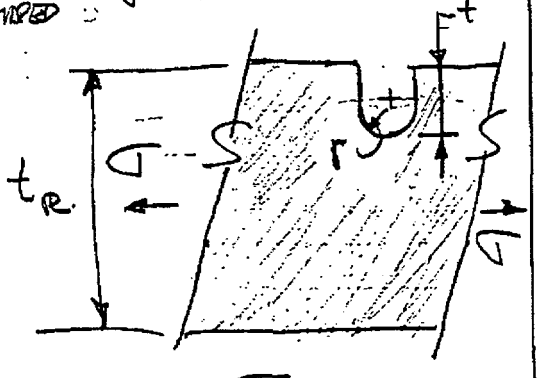

For $t/r = 1.0$, $K_t = 3.0$

(FOR A SEMICIRCULAR PIT W/ $t \le r$ K_t WILL BE LESS THAN 3.0 WHEN EXTRAPOLATING THE CURVE SHOWN IN FIG 15. (SEE NEXT PAGES)

$K_t = \frac{\sigma_{max}}{\sigma}$

EXTRAPOLATION OF FIGURE 15 FOR PITS SHALLOWER THAN $t/r = 1.0$ (SEMICIRCULAR)

FOR A PIT W/ DEPTH t $= 1/4$ DIA. $= t/r = 1/2$

$K_t \approx 2.4$

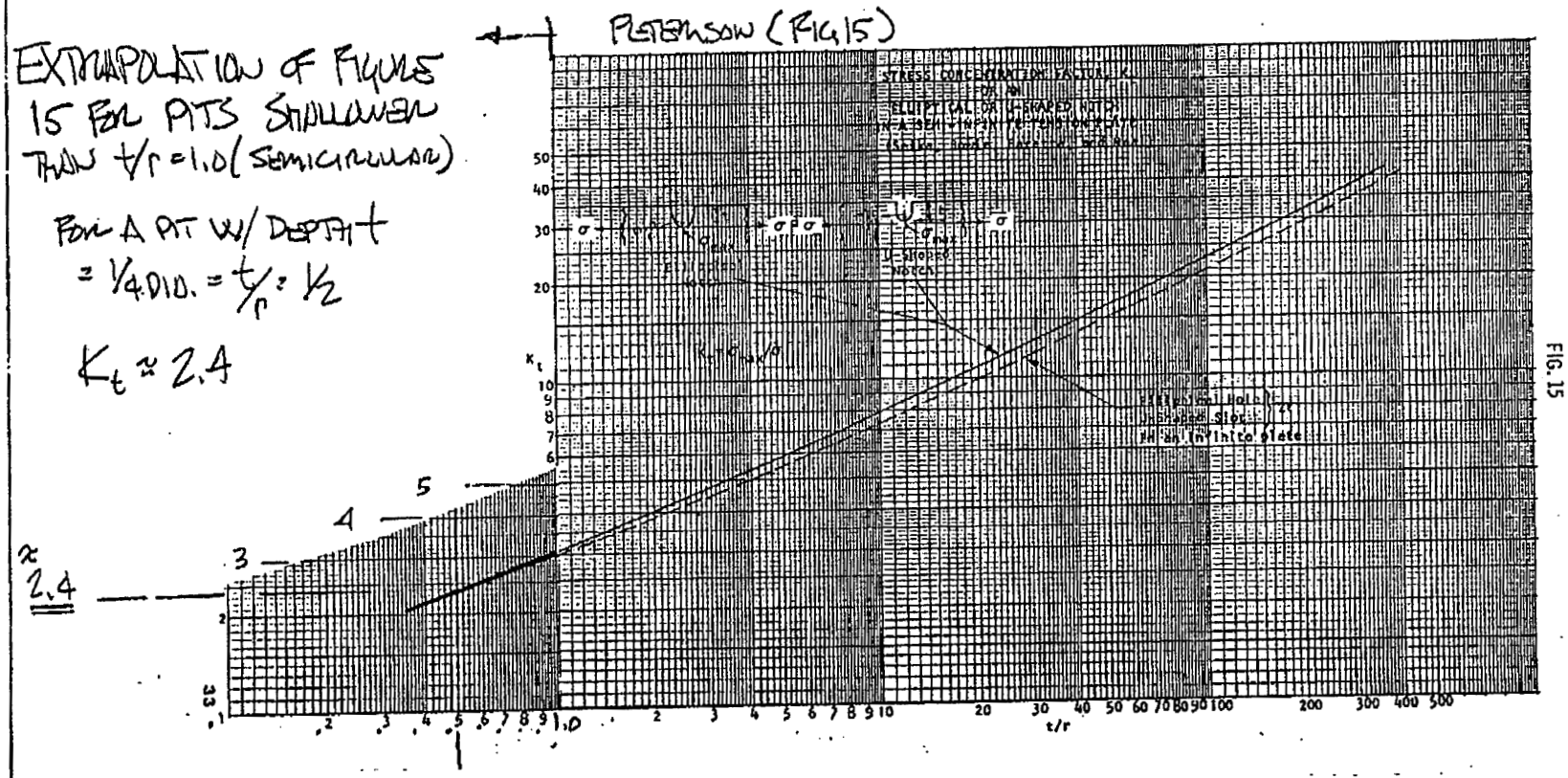

FOR PITS W/ DEPTH LESS THAN 1/2 DIAMETER $t/r \leq 1.0$ K_t WILL BE LESS THAN 3.0, THIS IS FOR AN END NOTCH IN A SEMI-CIRCULAR PLATE. FIGURES 16 & 28 IN PETERSON EVALUATE DIFFERENT GEOMETRIES BUT ALSO SHOW THAT FOR SHALLOW SURFACE EFFECTS K_t IS LESS THAN 3.0. FIGURE 86 IN PETERSON SHOWS STRESS CONCENTRATION FACTORS K_t FOR THROUGH WALL HOLE IN A PLATE IS APPROX. 3.0 FOR WIDE PLATES.

FIGURE 90 IN PETERSON SHOWS $K_t \approx 3.0$ FOR HOLES W/ SMALL β, $\beta = \frac{\sqrt{3(1-\nu^2)}}{2}\left(\frac{r}{\sqrt{Rt}}\right)$
FOR A 2"ϕ HOLE IN THIS TANK $r = 1"$ $\beta = .08$ $K_t \leq 3.0$

CALCULATION LOCAL THINNING - (TORUS SHELL (CONT)

PITS: @ BOTTOM ℄ TORUS (BOUNDING LOCATION FOR BOTTOM OF TORUS)

GIVEN LARGE EXTENT OF PLATE VS. SIZE OF PITTING EVALUATED NO CONSIDERATION WILL BE GIVEN TO INCREASE IN LOCAL MEMBRANE STRESS UNTIL PIT DIAMETER APPROACHES T_{min}. (.584"), GIVEN THAT THE ASME VIII REINFORCING CRITERIA ALLOWS UP TO 2" ϕ NOZZLES WITHOUT ADDITIONAL REINFORCEMENT.

FOR SMALL PITS: DEPTH ≤ 1/2 DIA MAXIMUM, $K_t \leq 3.0$

FOR A SMALL THROUGH WALL HOLE IN THE SHELL DIA t_{TORUS} $K_t \leq 3.0$ (FIGURE 90 2" ϕ HOLE, $K_t = 3.0$)
FOR SMALL DIA. PITS LESS THAN $2t_{NOM}$ $P_L < 1.5 S_m$ DOES NOT HAVE TO BE SATISFIED, ONLY $(P_L + P_b + Q + F) \leq S_A$ PEAK STRESS INTENSITY MUST BE SATISFIED.

PRIMARY MEMBRANE STRESS INTENSITY ALTERNATES FROM 0 TO 17,479. PSI FOR DBA LOADS ALSO A SIMILAR STRESS RANGE OCCURS FOR TYPE A TESTS (ALTHOUGH LOWER BASED ON 44 VS 56 PSI) TO ACCOUNT FOR LIGHTNING PRESSURE USE 3/56(17,479) + 17,479 = 18,103. PSI FOR $(P_L + P_b + Q + F)$
CONSERVATIVELY ASSUME PITS ARE ORIGINAL AND WILL BE EVALUATED FOR 100 CYCLES TO TO ACCOUNT FOR PRESSURE TESTING OVER THE LIFE OF THE PLANT, FROM FIGURE N415(A) IN ASME III 1965 FOR CARBON & LOW ALLOY STEELS

S_a FOR 10^2 CYCLES = 200,000. PSI.

PEAK STRESS INTENSITY IS CALCULATED USING PRIMARY MEMBRANE STRESS AND K_t FOR A THROUGH WALL HOLE.

$$(P_L + P_b + Q + F) = 3.0(18{,}103.\text{PSI}) = 54{,}309. \leq S_a = 200{,}000\text{ PSI}$$

∴ SMALL ROUND PITS W/ DIA ≤ t_{min} MEET STRESS CRITERIA REGARDLESS OF DEPTH. (PROVIDED SUFFICIENT DISTANCE BETWEEN THEM) ??

CALCULATION - continued TORUS SHELL - LOCALIZED THINNING

SMALL PITS & SURFACE DEFECTS

Small shallow pits and gouges are surface effects, and if there is sufficient space between them they will not effect the membrane stress in the shell at the pit location. The surface stresses from small pits are treated as peak stresses in the ASME code. Peak stresses are evaluated for cyclic loading (fatigue). Using a stress concentration factor for a through wall indication (hole), the Torus shell was evaluated for cyclic loading for 100 stress cycles. If the actual stress concentration factor is higher than the 3.0 used, then there is sufficient margin to Sa (=200,000. Psi). Alternately, since the use of 100 cycles is assumed, the allowable number of cycles based on the 3.0 stress concentration factor can be determined using Figure N415(A) in ASME III. For an alternating stress of approx. 54,500. Psi., the allowable number of alternating stress cycles is approximately 3,500 cycles.

what depth?

For inspection and evaluation purposes, the following criteria/guidelines will be used.

PITS

A pit will be defined as a single small area of corrosion less than ½ (0.50) inch in diameter. Larger size areas of corrosion will be identified as a local area.

Isolated pits will be defined as those with center to center spacing greater than 3 times the diameter of the larger size pit. (Based on effect on K_t as shown in Figures 27, 45, and 105 of reference 9.) For inspections:

All areas of coating degradation and areas of surface pitting with pit sizes less than 1/8 (.125) inch diameter and depth less than 1/16 (.0625) inch depth. Isolated pits are acceptable without further evaluation.

All areas of coating degradation and areas of surface pitting with pit sizes great than 1/8 (.125) inch diameter and /or depth more than 1/16 (.0625) inch depth shall be mapped out and forwarded to the responsible engineer for disposition.

all areas or "all pits"?

Isolated pits are acceptable without further evaluation based on the calculations on the previous pages.

Groups of pits in close proximity must be assessed to determine if the area of wall loss taken in aggregate is significant enough to equate to a single large area of wall loss.

Engineering shall evaluate the condition with respect to augmented inspection requirements of ASME XI Subsection IWE.

CALCULATION - continued TORUS SHELL - LOCALIZED THINNING

SMALL PITS & SURFACE DEFECTS -continued

GOUGES

A gouge is a loss of base metal caused by impact with a foreign object.

Identify and note on inspection report any surface gouges with length less than ½ inch and depth less than 1/16 (.0625) inch depth. These are acceptable without further evaluation.

Identify and locate all surface gouges with length more than ½ (0.50) inch and/or depth more than 1/16 (.0625) inch depth. Map out length, depth, and orientation. Forward to the responsible engineer for disposition.

ARC STRIKES

Small arc strikes shall be dispositioned using the criteria for pits or gouges above depending on the as-found size and shape.

CALCULATION - continued TORUS SHELL - LOCALIZED THINNING

LOCAL AREAS – Simplified Method – where / when is this being used?

A simplified method to evaluate local areas of wall loss less than about 20 percent of nominal wall thickness (T_{nom}) is shown below provided that the following conditions are met:

A. The corroded area is greater than ½ (0.50) inches in diameter and less than 4.93 inches in equivalent diameter. Areas smaller than 0.50 inches in diameter are considered as pits.

B. There is a smooth transition back to full wall thickness. The transition approximates a 3 to 1 or 4 to 1 slope.

C. There are no other local areas within a center to center spacing less than 24.6 inches.

The transition will minimize local bending stresses in the shell due to the discontinuity. For conservatism a factor of 1.2 will be applied to the general membrane stress intensity to account for bending. This will satisfy ASME N413.3 **($P_L + P_b \leq 1.5S$)**

Method:

1. Review thickness data to confirm size, shape and proximity in accordance with A, B, and C above.

2. Calculate local membrane stress intensity using lowest measured thickness T_{meas}. And compare to **1.5S.**

$$P_L = 1.2\, P_b \left[\frac{T_{nom}}{T_{meas}}\right] \leq 1.5S$$

CALCULATION: LOCAL AREAS TORUS SHELL (CONT)

SIMPLIFIED METHOD EXAMPLE: LOCAL AREA AT TORUS BOTTOM ℄

THICKNESS MEASURED USING UT 1/2"x1/2" SQUARE GRIDS

	A	B	C	D	E	F	G	H
1	.584	.584	.584	.584	.554	.554	.584	.584
2	.584	.584	.552	.551	.550	.552	.584	.584
3	.584	.552	.510	.509	.510	.510	.550	.584
4	.554	.551	.509	.469	.470	.508	.550	.584
5	.584	.550	.508	.470	.470	.509	.550	.584
6	.584	.584	.550	.508	.509	.550	.584	.550
7	.554	.584	.549	.550	.551	.583	.583	.584
8	.584	.583	.585	.554	.583	.585	.584	.584

A: EQUIVALENT DIA ≈ 3.5" < 4.93"

B. SLOPE ≈ $\frac{(.584-.469)}{(3.5/2)}$ ≈ .066 ≤ 1/4

C. NO OTHER LOCAL AREAS WITHIN 24.6 INCHES

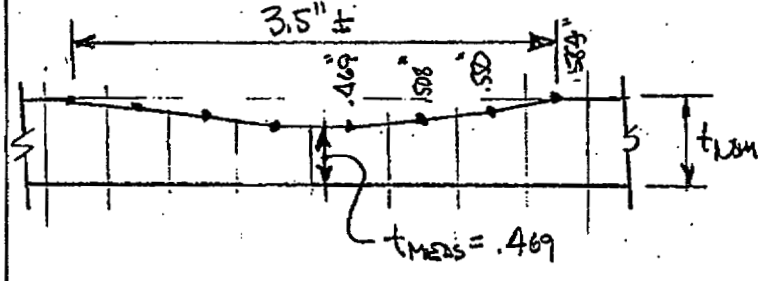

@ TORUS BOTTOM ℄

P_m = 17,479. PSI

S = 17,500 PSI

1.5S = 26,250. PSI

$$P_L = 1.2 P_b \left(\frac{t_{nom}}{t_{meas}}\right) \leq 1.5S$$

$$= 1.2(17{,}479)\left(\frac{.584}{.469}\right) = 26{,}118.\text{PSI} < 26{,}250 \text{ PSI}$$

∴ LOCAL THINNING MEETS N413.3 REQUIREMENTS. (LOCAL PRIMARY + BENDING)

TORUS BOTTOM HAS HIGHEST P_m FOR LOWER HALF. THIS EXAMPLE IS A BOUNDING CALCULATION FOR THIS SIZE AREA. FOR A SCREENING CRITERIA FOR USE BY INSPECTORS USE 1/16" (.0625") ≈ 10% DEPTH LESS OR EQUAL TO 1" DIA.

CALCULATION - continued TORUS SHELL - LOCALIZED THINNING

LOCAL AREAS – Modification of TES Methodology

The methodology for evaluation of localized thinning was developed by TES in Attachments A to E (as documented in Revision 0 of this calculation). It is based on detailed structural analyses using finite element codes and the more complex Mark I loads. The technical adequacy of their methodology is not in question. Only the maximum pressures used and the differences in allowable stresses preclude direct use of the TES methodology and results.

The TES methodology can be conservatively modified to account for the differences in maximum pressures and in the allowable stresses used in different years of the ASME code. The TES Methodology was based on the maximum accident pressure of 44. Psi. plus a full spectrum of hydrodynamic loads associated with the Design Basis Accident (DBA). It is conservative to factor the TES acceptable thickness for a given configuration by the ratio of the design pressure to the maximum accident pressure (56.Psi./44.Psi. = 1.273) since the TES acceptable thickness accounts for the hydrodynamic loads plus the maximum pressure on the Torus.

The original design report used an allowable stress intensity of 17,500. Psi., the TES analysis used 19,300. To equate the TES results with the original design requirements the TES acceptable thickness for a given configuration will be factored by the ratio of the 1977 allowable to the 1965 allowable or (19,300./17,500. = 1.103).)

The procedure for "Permissible Local Reduction in Torus Shell Thickness for an Indication" will be revised to account for the differences in design pressure and allowable stress intensities as shown marked up on the on the next pages.

The combined factor for acceptable thickness is (1.273)(1.103) = (1.404)

Alternatively the acceptable depth indication may be reduced by (1/1.404 = 0.712)

Did TES review and approve this change?

CALCULATION - continued TORUS SHELL - LOCALIZED THINNING

NOTE: FIGURES REFERENCED ARE IN ATTACHMENT A

LOCAL AREAS – Modification of TES Methodology

TES METHODOLOGY FROM PGS 13 & 14 OF ATTACHMENT A

MODIFICATIONS (FOR 56PSI DESIGN PRESSURE)

2.2 Permissible Local Reduction in Torus Shell Thickness for an Indication

An indication, which may be found upon inspection of the torus shell (Figure 4), may be acceptable if it does not meet the screening criteria ~~of Sub-Table 1~~, for required shell thickness (~~Figures 2 and 3~~) provided that it meets the local stress criteria of the Code for the particular location of concern.

← TABLE FOR GENERAL SHELL CODE MIN. WALL AND ACCEPTABLE CRITERIA ON PG 10 OF THIS CALC.

A generalized compatibility analysis to determine the effect of a cylindrical depression on a uniform stress distribution was performed for a large circular plate of constant thickness (Reference 19). ATTACHMENT A

Figure 6 for the free shell and Figure 7 for the local shell regions of the torus are based upon this analysis using the necessary Vermont Yankee torus parameters. Therefore, if an indication is found in these regions which does not meet the minimum wall thickness requirements of ~~Table 1 or Figure 6 (the permissible corroded thickness of the free shell region) or Figure 7 (the permissible corroded thickness of the local shell region adjacent to the ring girder)~~, the following procedure may be performed using the appropriate Figure 8 or 9.

← (SAME AS ABOVE)

The procedure for use of Figures 8 and 9 for an indication in its final-blended and as-examined state is as follows:

1. Circumscribe the area of the indication and measure the diameter (D).

   O.K. AS IS

2. Determine the maximum indication depth (d).

   " " ($d = T_{NOM} - T_{MEAS.}$)

3. Assure that no additional indications are found local to the circumscribed area within 24.64 inches or two-and-one-half-square-roots-of-mean-radius-times-thickness (i.e., 2.5/Rt).

   ← TES USED $2.5\sqrt{Rt}$ IN BOTH HOOP AND LONGITUDINAL DIRECTIONS, ASME CODE LIMITS LONGIT. DIRECTION ONLY.

4. If the criterion of step 3 is violated, repeat the procedure starting with step 1 and include any indications which violate the criterion of step 3 in the circumscribed area.

   OK AS IS.

5. Review Figure 6 or 7 to determine the arc region (S) of the torus shell which contains the circumscribed indications resulting from step 1.

   " "

~~6. If the measured indication depth (d) is less than the permissible corroded thickness from the appropriate Figure 6 or 7, the indication is acceptable and the remaining steps 7 through 9 may be skipped.~~

DELETE STEP, FUNCTION ALREADY PERFORMED PRIOR TO ENTERING STEP 1 ABOVE.

CALCULATION - continued TORUS SHELL - LOCALIZED THINNING

LOCAL AREAS – Modification of TES Methodology

TES METHODOLOGY (CONT)

7. Determine the circumscribed diameter multiplier (F) from the table of Figure 8 or 9 based on the arc region (S) from step 5. If the circumscribed indications extend into other arc regions, use the largest multiplier (F).

8. Determine the equivalent diameter (D') which circumscribes the indications:

$$D' = D \times F$$

* 9. Using D' and the appropriate Figure 8 or 9 curve, determine the allowable indications depth d' and compare it to the measured depth d:

$$d \le d' \quad *$$

Note that the allowable depth (d') shall be measured based on the uncorroded nominal shell thickness. Adjust the allowable depth (d') to account for reduced wall thickness measured. Subtract the difference between the original wall thickness (T_o) and the measured wall thickness (t) from the allowable depth (d') to obtain the adjusted d'. See Appendix B for sample calculations.

MODIFICATIONS FOR 56 PSI DESIGN PRESSURE (CONT)

OK AS IS.

OK AS IS.

* CAUTION d' FROM FIGURES 8 & 9 FOR LARGER D' ARE NOW LIMITED BY THE TABLE FOR GENERAL SHELL CODE MINIMUM WALL THICKNESS AND ACCEPTANCE CRITERIA OF PG 10 OF THIS CALCULATION (IE. FULL CURVE NOW CONTROLS. DO NOT USE VERTICAL PORTS OF CURVES MARKED "T_{COR} = ...")

ONCE d' IS OBTAINED FROM EITHER FIGURE 8 OR 9, REDUCE IT BY $\left(\frac{1}{1.404}\right)$, THEN COMPARE THE REDUCED d' TO d AS SHOWN IN STEP 9

CALCULATION: TORUS SHELL - LOCALIZE THINNING

EXAMPLE OF ANALYSIS FOR LOCAL THINNING USING THE TES GENERIC STRESS CALCULATIONS IN ATTACHMENT B

USING ACTUAL TORUS DATA FROM THE FULL LENGTH TEST STRIP ON THE BOTTOM OF TORUS BAY 8 TAKEN DURING THE 1998 RFO. (THE TEST STRIP IS A 2 FT WIDE BY FULL BAY LENGTH UT GRID USED TO ASSESS THE EFFECTS OF SAND BLASTING ON THE TORUS SHELL.)

FROM UT THICKNESS DATA REPORT FOR BOTTOM TORUS BAY 8 DATED 4/10/98 (ATTACHMENT G, THIS CALC.) THERE IS A REGION OF LOWER THICK. MEASUREMENTS LESS THAN 0.574" (ACCEPTANCE CRITERIA) PARALLEL TO THE BOTTOM SEAM WELD WIDTH IS 2" TO 4" AND LENGTH IS APPROX 30" LONG., THESE LOW READINGS WERE NOT CHARACTERIZED (PITS, INCLUSIONS, ETC.) HOWEVER THE UT TECHNIQUE AUTOMATICALLY RECORDS THE LOWEST READING IN A 100% SCAN OF EACH 2"x2" GRID. GIVEN LOWEST THICKNESS IN ADJACENT GRIDS IS >.584" (UP TO 0.608") THE READINGS ARE HIGHLY QUALIFIED.

AT TORUS BOTTOM ℄ THE ACCEPTANCE CRITERIA FOR GENERAL AREA MINIMUM WALL THICKNESS IS 0.574" (PAGE 10 OF THIS CALCULATION)

PORTIONS OF THE UT DATA ARE SHOWN ON THE NEXT PAGE

- GRIDS ARE 2" x 2" SQUARE.
- THICKNESS SHOWN IS THE LOWEST MEASURED IN 100% SCAN OF GRID.

VERMONT YANKEE DESIGN ENGINEERING CALC. NO. VYC 1032 REV. 1 DATE 10/25/95

TITLE TORUS SHELL & VENT SYSTEM THICKNESS REQUIREMENTS (CLUTENA)

PREPARED BY JCRB REVIEWED BY WJD PAGE 25 OF

CALCULATION: TORUS SHELL LOCAL THINNING ANALYSIS USING TES GENERAL STRESS CALCS (CONT.)

~ FROM 4/10/98 UT REPORT (ATTACH. G)

BAY 8 AFTER BLASTING

B8BOT-	A	B	C	D	E	F	G	H	I	J	K	L
73	0.601	0.601	0.598	0.598	0.597	0.599	0.613	0.616	0.619	0.619	0.621	0.620
74	0.602	0.602	0.592	0.581	0.599	0.597	0.613	0.613	0.603	0.618	0.618	0.617
75	0.605	0.604	0.600	0.597	0.592	0.599	0.615	0.608	0.605	0.597	0.618	0.617
76	0.602	0.603	0.602	0.602	0.604	0.602	0.609	0.608	0.617	0.619	0.618	0.619
77	0.605	0.604	0.604	0.602	0.599	0.599	0.609	0.614	0.617	0.616	0.617	0.617
78	0.605	0.603	0.603	0.602	0.602	0.595	0.611	0.614	0.615	0.612	0.612	0.614
79	0.608	0.606	0.604	0.604	0.601	0.600	0.608	0.605	0.610	0.615	0.612	0.614
80	0.604	0.603	0.605	0.603	0.588	0.586	0.601	0.606	0.611	0.610	0.612	0.612
81	0.604	0.605	0.606	0.605	0.589	0.575	0.609	0.609	0.611	0.613	0.613	0.612
82	0.607	0.607	0.606	0.606	0.599	0.581	0.588	0.607	0.608	0.611	0.610	0.612
83	0.607	0.607	0.606	0.604	0.596	0.585	0.590	0.609	0.611	0.609	0.609	0.610
84	0.606	0.604	0.606	0.608	0.598	0.582	0.598	0.608	0.608	0.607	0.610	0.608
85	0.605	0.607	0.604	0.605	0.590	0.591	0.574	0.600	0.606	0.606	0.604	0.605
86	0.604	0.604	0.604	0.604	0.589	0.585	0.587	0.597	0.605	0.604	0.603	0.604
87	0.606	0.604	0.606	0.605	0.589	0.595	0.600	0.603	0.603	0.602	0.603	0.597
88	0.605	0.607	0.605	0.603	0.603	0.592	0.593	0.602	0.601	0.600	0.600	0.580
89	0.607	0.604	0.605	0.601	0.603	0.585	0.592	0.601	0.602	0.600	0.599	0.601
90	0.609	0.607	0.604	0.605	0.603	0.581	0.569	0.587	0.587	0.586	0.593	0.594
91	0.606	0.605	0.608	0.606	0.602	0.593	0.562	0.587	0.574	0.588	0.559	0.584
92	0.608	0.606	0.609	0.606	0.606	0.590	0.558	0.558	0.571	0.583	0.575	0.567
93	0.608	0.607	0.607	0.607	0.601	0.576	0.578	0.577	0.575	0.578	0.579	0.579
94	0.606	0.604	0.604	0.606	0.602	0.586	0.573	0.579	0.574	0.583	0.581	0.573
95	0.605	0.604	0.604	0.603	0.603	0.601	0.577	0.581	0.580	0.579	0.581	0.578
96	0.606	0.605	0.605	0.604	0.584	0.604	0.580	0.569	0.582	0.581	0.585	0.580
97	0.607	0.605	0.604	0.594	0.577	0.590	0.559	0.557	0.582	0.582	0.584	0.578
98	0.607	0.604	0.604	0.603	0.602	0.603	0.568	0.583	0.582	0.580	0.581	0.580
99	0.605	0.604	0.603	0.594	0.598	0.599	0.580	0.583	0.581	0.584	0.584	0.581
100	0.606	0.605	0.604	0.590	0.595	0.593	0.572	0.586	0.584	0.585	0.584	0.583
101	0.604	0.602	0.586	0.604	0.602	0.595	0.573	0.580	0.582	0.584	0.583	0.583
102	0.603	0.605	0.603	0.589	0.602	0.578	0.578	0.576	0.584	0.580	0.583	0.586
103	0.603	0.605	0.605	0.603	0.602	0.586	0.555	0.585	0.586	0.585	0.584	0.585
104	0.606	0.604	0.604	0.602	0.596	0.572	0.569	0.575	0.582	0.583	0.584	0.585
105	0.603	0.603	0.604	0.602	0.581	0.581	0.575	0.573	0.584	0.586	0.586	0.585
106	0.603	0.604	0.603	0.600	0.599	0.595	0.580	0.587	0.586	0.585	0.585	0.584
107	0.605	0.603	0.603	0.598	0.588	0.589	0.583	0.586	0.586	0.586	0.586	0.587
108	0.605	0.606	0.603	0.598	0.601	0.601	0.587	0.586	0.585	0.584	0.587	0.585

15 GRIDS

SEE ATTACHMENT G

[illegible] 4/10/98

B8BOTAFT

Page 3

WELD SEAM & BOTTOM OF TORUS

LENGTH LONGITUDINAL ≈ 30" ← 2 LONGER IN LONGITUDINAL DIRECTION THAN TES METHODOLOGY ALLOWS.

LENGTH HOOP ≈ 4"

ROW 104 IS APPROX. (ROW118 → ROW105)(2") = 26" FROM BAY 8/9 INTERSECTION. ∴ LOCAL INDICATION IS IN THE "FREE SHELL REGION" (AWAY FROM SUPPORTS)

NORMAL STRESSES IN THE HOOP DIRECTION CONTROL THE ALLOWABLE STRESS INTENSITY.

CALCULATION TORUS SHELL LOCAL THINNING ANALYSIS USING TES GENERAL STRESS CALCS. (CONT.)

THE AREA OF LOWEST READINGS IS PARALLEL AND ADJACENT TO THE BOTTOM LONGITUDINAL SEAM WELD.

THE 1998 OUTAGE VISUAL INSPECTION REPORTS (TABS 1 AND 2 IN DWG INSPECTION REPORT (REF 11.) INDICATE ONLY LIGHT SURFACE CORROSION WITH NO APPARENT DAMAGE TO SUBSTRATE, BUT A LIMITED NUMBER OF PREVIOUS (UNDERWATER) COATING REPAIRS IN THIS AREA.

CHARACTERIZE THE LOW READINGS AS A LONGITUDINAL AREA 30" LG. AND 4" WIDE (THE ACTUAL LOW READINGS MAY BE SINGLE POINTS ADJACENT TO THE WELD

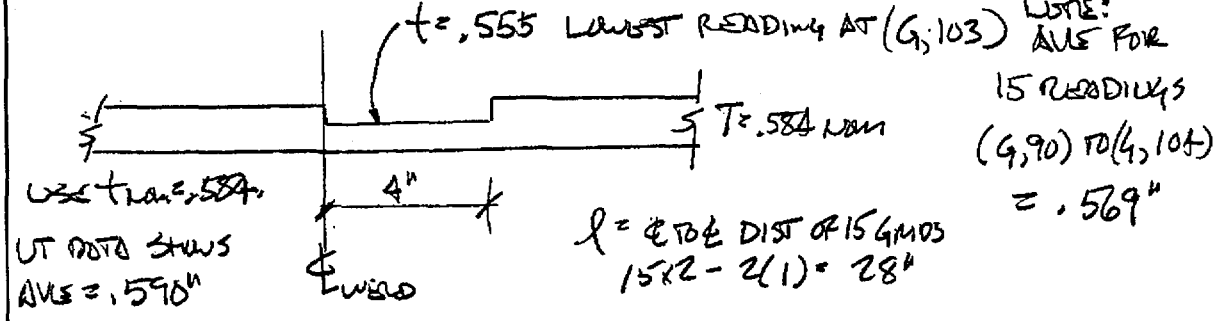

USING APPENDIX B OF TES CALC 7426-1 (ATTACHMENT B TO THIS CALC) PAGES B-2 TO B-12 USING TES NUMBERING SCHEME.

AT THIS ℄ OF THE 28" INDICATION THE STRESS EQUATIONS DEVELOPED BY TES CAN BE USED TO CALCULATE LOCAL MEMBRANE PLUS BENDING STRESSES $P_L + P_b$ DIRECTLY.

T_o = NOMINAL THICKNESS = .584"

$t = T_o - d$ = .555" (MINIMUM MEASURED)

$P_o \cong 62$ PSI @ BOTTOM ℄ $R = D/2 = 4"/2 = 2"$

CALCULATION TORUS SHELL LOCALIZED THINNING
EXAMPLE USING TES GENERAL STRESS CALCULATIONS (CONT)

FROM TES PAGE B9 (ATTACHMENT A)

$\tau = t/T_o$

$= .555/.584$

$= .950$

STEEL, POISSONS RATIO = 0.3

$\nu = .3$

$1-\nu = .7$

$1+\nu = 1.3$

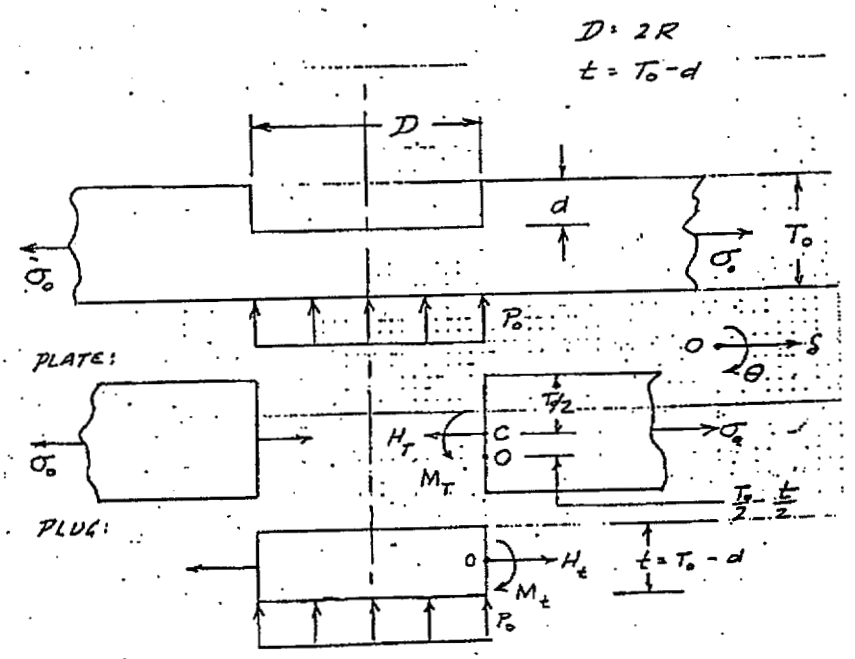

TES CALCULATED QUANTITIES [A], [B], & [C]

$$[A] = \frac{1-\nu}{1+\nu} + 4\tau - 6\tau^2 + 4\tau^3 + \left[\frac{1+\nu}{1-\nu}\right]\tau^4$$

$$= .538 + 4(.95) - 6(.95)^2 + 4(.95)^3 + 1.857(.95)^4 = 3.859$$

$$[B] = 2\left[\frac{1}{1+\nu} + \frac{\tau^3}{1-\nu}\right] / [A] = 2\left(.769 + \frac{(.95)^3}{(.7)}\right) / 3.859 = 1.033$$

$$[C] = 3/4\,(1-\tau)(\tau^2) / [A] = \frac{3/4(1-.95)(.95)^2}{3.859} = .009$$

THESE AGREE WELL WITH TABLE ON TES PAGE # B-9 (ATTACHMENT B)

FOR $[C] \le .06$

$$P_L + P_b = [B]\sigma_o + 1.2375\left(\frac{R}{t}\right)^2 P_o$$

CALCULATION

$$P_L + P_b = 1.033(17,510.\ PSI) + 1.2375\left(\frac{2}{.555}\right)^2 62.\ PSI$$

$$18,087. + 996. = 19,083.\ PSI$$

$$19,083.\ PSI \leq 1.55 = 26,250.\ PSI$$

THIS EQUATES THE ℄ OF THE 30"Φ ZONE, THE LENGTH OF THE THINNED ZONE VS. THE 4" ASSUME WIDTH MAY RESULT IN HIGHER STRESSES. TO ACCOUNT FOR THIS INCREASE CALCULATED STRESS BY 25%

$$1.25(19,083.) = 23,854.\ PSI \leq 26,250.$$

1.10

ALTERNATIVELY LOOK AT A ROUND INDICATION OF THE SAME DEPTH ($t = .555"$) AND AN EQUIVALENT AREA

LENGTH = 28" AVE WIDTH = $\frac{5(4") + 10(2")}{15} = 2.67$ IN

AREA = 28" × 2.67" = 74.76 IN² $R = \sqrt{\frac{A}{\pi}} = \sqrt{\frac{74.76}{\pi}} = 4.88$ IN

$$P_L + P_b = 1.033(17,510.) + 1.2375\left(\frac{4.88}{.555}\right)^2 62.\ PSI$$

$$= 18,087. + 5,931.\ PSI$$

$$= 24,018.\ PSI \leq 26,250.\ PSI$$

1.09

A LOCAL AREA W/ $t = .555"$, WITH LENGTH ≈ 28' BY 2'-4' WIDE RUNNING PARALLEL TO AND ADJACENT TO THE BOTTOM SEAM WAS EVALUATED & FOUND ACCEPTABLE IN THE AS FOUND THICKNESS CONDITION, FUTURE CORROSION (IF IT IS CORROSION) IS MITIGATED BY THE NEW COATING APPLIED IN 1998.

CALCULATION

Vent Pipe, Vent Header, and Downcomer Thickness Requirements

The original CB&I design criteria and calculations will be compared to the TES analyses which used the Mark I Program criteria with respect to required wall thickness.

The original design report used an allowable stress intensity of 17,500. Psi., the TES analysis used 19,300. Psi. To equate the TES results with the original design requirements the TES acceptable thickness for a given configuration will be factored by the ratio of the 1977 allowable to the 1965 allowable or (19,300./17,500. = 1.103).)

The vent system components were sized using hand calculations for static pressures and thrust loads by Chicago Bridge and Iron (CB&I) in reference(5), pages 2C-4 to 2C-6. The Mark I Program analyses for the vent pipes, vent header, and downcomers performed by TES included the maximum accident pressure of 44. Psi. plus a full spectrum of hydrodynamic loads associated with the Design Basis Accident (DBA).

The TES analyses evaluated more complex loading and involved detailed computer models of critical components such as the vent line/header and the vent header/downcomer intersections. The TES evaluations included the modifications of the internals installed under the Mark I program.

Vent Pipe

The only component external to the Torus shell is the vent pipe. The vent pipe is a 6'-9" I.D., 0.25" thick pipe constructed of A516 Gr.70. Code minimum wall for the 56 Psi. design pressure 0.13 inches. (reference(5) page 2C-4). The required thickness from the TES report in Attachment A of this calculation is 0.158" which is more restrictive than the original design calculation requirements.

Vent Header and Downcomers

The CB&I design calculations for these components are simplified hand calculations for the 56 Psi internal pressure. They show significant margins to code allowable stresses. The only other calculations in the CB&I design report are area replacement calculations for the pipe intersections.

Given:

1. The vent & downcomer piping is internal to the Torus shell, which is the pressure boundary for the primary containment. The vent system serves as a boundary between the drywell and suppression chamber portions of the primary containment. The differential pressure is maintained only by the static head of water above the bottom of the downcomers. The maximum differential pressure between the vent system and the Torus will never approach the containment design pressure.

TABLE OF CONTENTS

SECTION	PAGE NO.
Cover Sheet	1
VY Calculation Database Input Form (VYAPF 0017.07)	2
Table of Contents	3
Introduction & Reason for Revision	4
Calculation Objective	4
Design Criteria / Analysis Inputs	5
Assumptions	7
Method of Solution	7
Calculation	8
Torus Shell - General Area Thickness Requirements	9
Torus Shell – Localized Thinning	12
Vent Pipe, Vent Header, and Downcomer Thickness Requirements	29
Summary of Results	31
Conclusion	32
VY Calculation Review Form	33-34
List of Attachments	35

Attachments	A	75 Pgs.
	B	124 Pgs.
	C	58 Pgs.
	D	16 Pgs.
	E	5 Pgs.
	F	6 Pgs.
	G	5 Pgs.

(Page Count)Total Pages = 327

CALCULATION

Vent Pipe, Vent Header, and Downcomer Thickness Requirements -continued

Vent Header and Downcomers - continued

2. TES evaluated the vent system for all pressure and hydrodynamic effects from the DBA. The TES loads and stress analyses are more complex and detailed than the CB&I calculations and are more reflective of the actual loads to be expected during a DBA.

3. The required thickness values shown in Table 2 of Attachment A are generally more restrictive than the original CB&I calculations.

Then:

Use of the TES criteria for the vent system & downcomer thickness criteria is more reflective of the DBA loading, accounts for all of the Mark I Program modifications , and has a more defensible technical basis than the CB&I minimum wall calculations. Use of the TES criteria will not affect the ability of the Torus to withstand the 56 Psi. Code design pressure and remain within code stress limits.

The only other issue to consider is the differences between the original design code and the Mark I program allowable stress intensities used in the calculations. The original design report used an allowable stress intensity of 17,500. Psi., the TES analysis used 19,300. Psi. To equate the TES results with the original design requirements, the TES acceptable thickness for the vent pipe will be factored by the ratio of the 1977 allowable to the 1965 allowable or (19,300. / 17,500. = 1.103). This will be applied to the 6' 9" ID vent pipe only since it is the only component that forms the external containment pressure boundary.

Summary of Vent Pipe/Vent Header/Downcomer Thickness Requirements
(For use as inspection screening criteria.)

The TES evaluation methodology for the vent pipe, vent header, and downcomers will be used directly except that the required thickness on the portions of the vent pipe which are the external containment boundary will be increased by 1.103 for consistency with the original design code.

For screening criteria to be used during inspections, the 10 percent nominal wall loss from IWE-3512.3 is more restrictive than the TES acceptance criteria for the vent header and downcomers away from the miter joints and piping intersections.

A separate engineering evaluation should be performed for any wall loss adjacent to the mitre joints and wall loss greater than 10 percent of nominal for the remainder of the vent header and downcomers.

SUMMARY / RESULTS

1. The differences in internal pressure, the ASME code design requirements, and acceptance criteria between the original design report, reference(5), and the TES Mark I program evaluations contained in Revision 0 to this calculation were evaluated with respect thickness requirements of the Torus external shell and the vent system piping.

2. Minimum wall thickness and acceptance criteria for general wall loss due to corrosion and/or wear based on the original design pressure of 56. Psi were developed for the Torus bottom and are shown on page 10 of this calculation.

3. Generic evaluations of pitting/surface effects based on the original design pressure of 56. Psi were performed. Small shallow pits and gouges are surface effects, and if there is sufficient space between them they will not effect the membrane stress in the shell at the pit location. Criteria for use in inspection and evaluation of surface pitting were developed. These are shown on page 17 of this calculation.

4. A simplified method for evaluation of shallow localized wall loss less than about 20 percent of nominal wall thickness was developed. The method is based on the 56. Psi design pressure and is in conformance with the original design code and accepted engineering practice. The method is shown on page 19 of this calculation.

5. Modifications to the TES methodology for evaluation of localized wall loss were developed for the Torus external shell. The modifications are based on the differences in internal pressure, the ASME code design requirements, and acceptance criteria between the original design report, reference(5), and the TES Mark I program evaluations contained in Revision 0 to this calculation. The modifications convert the TES methodology such that it is in conformance with the original design code and design pressures. The modifications are outlined on pages 22 and 23 of this calculation.

6. A method for evaluation of corroded areas larger than those included in the modified TES methodology was developed. An application based on the generic localized stress calculation methodology contained in Attachment B of this calculation using actual inspection data was performed. The evaluation used the 56. Psi design pressure. The application is intended to serve as an example for future evaluations and is shown on pages 24 to 28 of this calculation.

7. revision 1 11/21/99 Calculations from the original design report, reference(5), and the TES evaluations in ~~Reference~~ 0 of this calculation for the vent pipes, vent header, and the downcomers were reviewed and the applicability of the TES methodology was assessed. The TES evaluation methodology for the vent pipe, vent header, and downcomers can be used directly except that the required thickness on the portions of the vent pipe which are the external containment boundary will be increased by 1.103 for consistency with the original design code. The screening criteria shown on page 30 of this calculation was developed for inspection purposes.

CONCLUSIONS

VYC-1032 Revision 0 was revised per VY Commitment Item No. ER970307_01. This revision addresses the effects of the 56 Psi. ASME code design pressure vs. using the maximum accident pressure of 44 Psi. which was used by TES (Revision 0) in developing the Torus shell and vent system thickness requirements.

The analyses performed by TES in Attachments A to E (as documented in Revision 0 of this calculation) are based on detailed structural analyses using finite element codes and the more complex Mark I loads. The TES calculations and appropriate engineering reviews were performed under the TES Quality Assurance program with subsequent reviews performed by the YAEC VY Project – Mechanical Engineering Group in accordance with the requirements of YAEC Engineering Instruction WE-103. The technical adequacy of their methodology is not in question. Only the maximum pressures used and the differences in allowable stresses preclude direct use of the TES methodology and results.

General area minimum wall thickness and acceptance criteria for areas of localized corrosion were developed which are consistent with the original design pressure and code requirements. These are summarized on page 31.

Revision of this calculation does not affect any other existing VY calculations, there is no change to the plant as described in the Final Safety Analysis Report, and no 50.59 screen or evaluation is required.

This calculation will serve as a reference for evaluation of results from inspections of the Torus performed under ASME Section XI, Subsection IWE. The inspections are performed under VY Program Procedure PP7024, "Containment Inservice Inspection Program (IWE)".

VY CALCULATION REVIEW FORM

Calculation Number: VYC-1032 Revision Number: REVISION 1 CCN Number: N/A

Title: TORUS SHELL & VENT SYSTEM THICKNESS REQUIREMENTS

Reviewer Assigned: W.J. DUFFY Required Date: 11/10/99

Comments*	Resolution
1. PAGE 1 - SAFETY EVAL. NO. ADD N/A.	DONE JCFH
2. PAGE 3 - TABLE OF CONTENTS INCLUDE TOTAL PAGES.	DONE JCFH
3. PAGE 10 - REMOVE EXTRA POINT FROM SPREAD SHEET.	DONE JCFH
4. PAGE 15 - DIAMETER USED IN CALCS AND TABLES IS RADIUS.	CALCS REVISED TO REFLECT RADIUS. JCFH

Reviewer Signature / Date 11/10/99

Calculation Preparer (Comments Resolved) / Date 11/10/99

Method of Review:
- X Calculation/Analysis Review
- __ Alternative Calculation
- __ Qualification Testing

Reviewer Signature (Comments Resolved) / Date 11/10/99

*Comments shall be specific, not general. Do not list questions or suggestions unless suggesting wording to ensure the correct interpretation of issues. Questions should be asked of the preparer directly.

VY CALCULATION REVIEW FORM

Calculation Number: VYC-1032 Revision Number: REVISION 1 CCN Number: N/A

Title: TORUS SHELL & VENT SYSTEM THICKNESS REQUIREMENTS

Reviewer Assigned: W. J. DUFFY Required Date: 11/10/99

Comments*	Resolution
5. PAGE 17 - NO OF CYCLES AT END OF FIRST PARA. IS 3,500.	REVISED PP. JCHB
6. PAGE 23 - CAUTION IS UNCLEAR ADD CHART TO SHOW MEANING.	REVISED NOTE AS REQUESTED JCHB
7. PAGE 31 - ADD HEADING TO SHOW SCREENING CRITERIA	REVISED HEADING JCHB
8. MINOR EDITORIAL MARKUPS ON A COPY OF CALCULATION.	INCORPORATED JCHB

Reviewer Signature, 11/10/99 Date

Calculation Preparer (Comments Resolved), 11/10/99 Date

Method of Review:
- X Calculation/Analysis Review
- __ Alternative Calculation
- __ Qualification Testing

Reviewer Signature (Comments Resolved), 11/10/99 Date

*Comments shall be specific, not general. Do not list questions or suggestions unless suggesting wording to ensure the correct interpretation of issues. Questions should be asked of the preparer directly.

LIST OF ATTACHMENTS

A:	Teledyne Document: TES Technical Report TR-7426, "Mark I Torus Shell and Vent System Thickness Requirements - Vermont Yankee Nuclear Station", Revision 1, November 22,1991.	75 Pages
B:	Teledyne Document: TES Calculation No. 7426-1, "Mark I Torus Shell and Vent System Thickness Requirements - Vermont Yankee Nuclear Station", Revision 1, November 22,1991.	124 Pages
C:	Teledyne Document: TES Calculation No. 7426-2, "Calculation of Stress Intensification Factors for the Torus Vent Pipe/Header Intersection for Vermont Yankee" Revision 1, November 22,1991.	58 Pages
D:	Teledyne Document: TES Calculation No. 7426-3, "ABAQUS Verification Calculations for Vermont Yankee Vent Header Analysis", Revision 0, December 19,1990.	16 Pages
E	Teledyne Document: Project QA Program, Project No.7426, Revision 0, November 28,1990.	5 Pages
F	Vermont Yankee Event Report 97-0307 "Torus Shell Corrosion", dated March 13,1997.	6 Pages
G	Vermont Yankee Ultrasonic Data Inspection Report for the 2 foot wide test strip on the bottom of Torus Bay 8, "After Sandblasting", dated April 10,1998.	5 Pages
H.	AP0017 Appendix H, VY Calculation Review Checklist	3 Pages
	Total Pages of Attachments =	292 Pages

ATTACHMENT A;
VYC-1032 REV.1
PAGE 1 OF 75

YANKEE ATOMIC ELECTRIC COMPANY
580 MAIN STREET
BOLTON, MA 01740

TECHNICAL REPORT TR-7426
REVISION 1

MARK I TORUS SHELL AND VENT SYSTEM THICKNESS REQUIREMENTS
VERMONT YANKEE NUCLEAR STATION

NOVEMBER 22, 1991

TELEDYNE ENGINEERING SERVICES

130 SECOND AVENUE
WALTHAM, MASSACHUSETTS 02254
617-890-3350

TELEDYNE
ENGINEERING SERVICES

VYC-1032 ATTACHMENT A
PG 2 OF 75

LIST OF REVISIONS

Revision	Date	Description of Revision
0	12-28-90	Original Issue
1	11-22-91	LIST OF FIGURES Figure 17, changed UPPER to LOWER in title. Figure 18, changed LOWER to UPPER in title. Figure 23, added 1/4" THICK before VENT PIPE/SRV in title. Page 2, 2nd paragraph, corrected name of plant to Vermont Yankee. Page 14, References 19 and 20, changed calculation package revision to 1. Page 35, Figure 17, changed UPPER to LOWER in title. Page 36, Figure 18, changed LOWER to UPPER in title. Page 40, Figure 22, relocated T_{cor} line and arrow to align with the 0.182" thickness location. Page 41, Figure 23, added 1/4" THICK before VENT PIPE/SRV in title. Page 48, Figure 30, relocated T_{cor} line and arrow to align with the 0.077" thickness location.

1

TELEDYNE
ENGINEERING SERVICES

VYC-1032 ATTACHMENT A
PG A OF 75

LIST OF TABLES

		PAGE
TABLE 1	MINIMUM TORUS SHELL THICKNESS REQUIREMENTS, VERMONT YANKEE NUCLEAR STATION	16
TABLE 2	MINIMUM VENT SYSTEM THICKNESS REQUIREMENTS, VERMONT YANKEE NUCLEAR STATION	17

LIST OF FIGURES

		PAGE
FIGURE 1	ROTATED AXIS VIEW - VERMONT YANKEE, 1/32 DETAILED SHELL MODEL	19
FIGURE 2	MAXIMUM STRESS LOCATIONS - VERMONT YANKEE, 1/32 MODEL - UPPER HALF OF SHELL	20
FIGURE 3	MAXIMUM STRESS LOCATIONS - VERMONT YANKEE, 1/32 MODEL - LOWER HALF OF SHELL	21
FIGURE 4	LOCAL TORUS SHELL STRESS REGIONS, VERMONT YANKEE NUCLEAR STATION	22
FIGURE 5	MARK I STRUCTURAL ACCEPTANCE CRITERIA EVENT COMBINATIONS	23
FIGURE 6	PERMISSIBLE CORRODED THICKNESS FOR THE TORUS CROSS-SECTION AT MID-BAY (FREE SHELL REGION), VERMONT YANKEE NUCLEAR STATION	24
FIGURE 7	PERMISSIBLE CORRODED THICKNESS FOR THE TORUS CROSS-SECTION ADJACENT TO RING GIRDER (LOCAL SHELL REGION), VERMONT YANKEE NUCLEAR STATION	25
FIGURE 8	PERMISSIBLE SIZE RANGE FOR INDICATION, FREE-SHELL REGION OF THE TORUS, VERMONT YANKEE NUCLEAR STATION	26
FIGURE 9	PERMISSIBLE SIZE RANGE FOR INDICATION, RING GIRDER REGION OF THE TORUS, VERMONT YANKEE NUCLEAR STATION	27
FIGURE 10	VENT SYSTEM BEAM MODEL, VERMONT YANKEE NUCLEAR STATION	28
FIGURE 11	VENT HEADER/DOWNCOMER INTERSECTION MODEL, VERMONT YANKEE NUCLEAR STATION	29
FIGURE 12	VENT PIPE/SRV LINES A THRU D PENETRATION STARDYNE COMPUTER MODEL, VERMONT YANKEE NUCLEAR STATION	30
FIGURE 13	FREE AND LOCAL SHELL REGIONS FOR THE VENT HEADER, VERMONT YANKEE NUCLEAR STATION	31
FIGURE 14	PERMISSIBLE SIZE RANGE FOR INDICATION, VENT PIPE, VERMONT YANKEE NUCLEAR STATION	32
FIGURE 15	PERMISSIBLE SIZE RANGE FOR INDICATION, VENT HEADER, VERMONT YANKEE NUCLEAR STATION	33
FIGURE 16	FREE AND LOCAL SHELL REGIONS FOR THE DOWNCOMERS, VERMONT YANKEE NUCLEAR STATION	34

TELEDYNE ENGINEERING SERVICES

VYC-1032 ATTACHMENT A
Pg 6 of 75

LIST OF FIGURES
(Continued)

		PAGE
FIGURE 17	PERMISSIBLE SIZE RANGE FOR INDICATION, LOWER DOWNCOMER, VERMONT YANKEE NUCLEAR STATION	35
FIGURE 18	PERMISSIBLE SIZE RANGE FOR INDICATION, UPPER DOWNCOMER, VERMONT YANKEE NUCLEAR STATION	36
FIGURE 19	VENT SYSTEM VENT PIPE/SRV LINES A THRU D VERMONT YANKEE NUCLEAR STATION	37
FIGURE 20	LOCAL SHELL REGIONS, VENT PIPE/SRV LINES A THRU D PENETRATION, VERMONT YANKEE NUCLEAR STATION	38
FIGURE 21	PERMISSIBLE SIZE RANGE FOR INDICATION, VENT PIPE/ SRV (A THRU D) AT NOZZLE INTERSECTION VERMONT YANKEE NUCLEAR STATION	39
FIGURE 22	PERMISSIBLE SIZE RANGE FOR INDICATION, VENT PIPE/ SRV (A THRU D) AT EDGE OF WAGON WHEEL VERMONT YANKEE NUCLEAR STATION	40
FIGURE 23	PERMISSIBLE SIZE RANGE FOR INDICATION, 1/4" THICK VENT PIPE/SRV (A THRU D) AT EDGE OF 3/4" PAD VERMONT YANKEE NUCLEAR STATION	41
FIGURE 24	LOCAL SHELL REGIONS, VENT PIPE/SRV LINES A THRU D LOWER SUPPORT ATTACHMENT, VERMONT YANKEE NUCLEAR STATION	42
FIGURE 25	PERMISSIBLE SIZE RANGE FOR INDICATION, VENT PIPE/ SRV (A THRU D) AT LOWER SUPPORT VERMONT YANKEE NUCLEAR STATION	43
FIGURE 26	VENT PIPE/HEADER INTERSECTION, ABAQUS COMPUTER MODEL VERMONT YANKEE NUCLEAR STATION	44
FIGURE 27	VENT PIPE/HEADER INTERSECTION LOCAL THICKNESS REGIONS, VERMONT YANKEE NUCLEAR STATION	45
FIGURE 28	PERMISSIBLE SIZE RANGE FOR INDICATION, VENT PIPE/HEADER INTERSECTION ADJACENT TO STIFFENERS, VERMONT YANKEE NUCLEAR STATION	46
FIGURE 29	PERMISSIBLE SIZE RANGE FOR INDICATION, VENT PIPE/HEADER INTERSECTION AT VENT PIPE BRANCH, VERMONT YANKEE NUCLEAR STATION	47

LIST OF FIGURES
(Continued)

		PAGE
FIGURE 30	PERMISSIBLE SIZE RANGE FOR INDICATION, VENT PIPE/HEADER INTERSECTION AT RING HEADER BRANCH, VERMONT YANKEE NUCLEAR STATION	48
FIGURE 31	PERMISSIBLE SIZE RANGE FOR INDICATION, VENT PIPE/HEADER INTERSECTION AT VENT HEAD, VERMONT YANKEE NUCLEAR STATION	49
FIGURE 32	PERMISSIBLE SIZE RANGE FOR INDICATION, VENT PIPE/HEADER INTERSECTION AT VENT HEAD BRANCH, VERMONT YANKEE NUCLEAR STATION	50

TELEDYNE ENGINEERING SERVICES

VYC-1032 ATTACHMENT A
P48 of 75

1.0 INTRODUCTION

Teledyne Engineering Services (TES) has been requested by Yankee Atomic Electric Company (YAEC) (Reference 1) to review the Mark I Torus Containment Program analysis of the torus and vent system to determine the shell thickness requirements for these vessel components.

The torus shell analysis of record will be reviewed herein using available information to:

??

1. Map the profile of the required minimum shell thickness for the symmetric torus bays.

What is the remaining margin ??

2. Determine the permissible local reduction in shell thickness at mid-bay bottom dead center, the location of least margin, for a range of postulated indications.

In addition, TES will review the existing vent system analysis to:

1. Determine the corrosion allowance used for the analysis, if any.

2. Review all critical vent system shell locations calculating the minimum required shell thickness based on the present Mark I event loading combinations.

3. Identify and report on analysis conservatisms which might significantly decrease the required minimum wall thickness with additional refinement, if any.

TELEDYNE ENGINEERING SERVICES

VYC-1032 ATTACHMENT A
P9 of 75

2.0 TORUS SHELL ANALYSIS

TES has determined that the Mark I Program analysis of record for the torus shell took advantage of the full as-built vessel thickness. In reviewing the documentation (References 2 and 3), it was determined that the full thickness was used to comply with the Code (Reference 4) requirements for the torus shell stress at the mid-bay (free-shell) locations for the specified event combinations (Reference 5). These event combinations include both the original design loads and Mark I Program loads per the structural acceptance criteria (Reference 6).

During the review of this documentation TES determined that the torus shell analysis conservatisms had been previously considered and eliminated as a practical consideration for demonstrating compliance with the Code requirements during the original evaluation. Some of the important refinements which eliminated the analysis conservatism and reduced the number of modifications at the Vermont Yankee include:

- Use of in-situ SRV testing to reduce the conservatism in the GE load definition.
- TES in-house development of the torus shell stress post-processing program DISTRESS (Reference 7) to handle the many computer analyses for the various loading conditions, to combine all data on a component stress level, and to produce final results for the 27 Mark I event combinations.
- Redefinition of the condensation oscillation loading function in the time domain to account for load phasing.
- Development of an improved methodology to enforce compatibility between the torus shell and the attached piping systems.

Therefore, it is our opinion that additional refinement of the Mark I torus shell analysis would not be practical to increase the margin on torus shell thickness.

VYC-1032 ATTACHMENT A
PG 10 of 75

2.1 Minimum Torus Shell Thickness Requirements

TES has reviewed the torus shell analysis package (Reference 2) and associated computer output from our one-thirty-second STARDYNE (Reference 8) finite-element computer model (Figure 1) to obtain event combination stress output at specific locations from our DISTRESS torus shell stress post-processor (Reference 7). Because of the large volume of data available for post-processing during the Mark I Program, only those elements at critical locations as determined by preliminary scoping analyses had been post-processed during the final analysis phase. These elements, which are located at mid-bay (free-shell) and adjacent to the ring girder (local shell), are shaded in Figures 2 and 3. It is our opinion that this information is adequate to determine the minimum thickness requirements since the major loads (i.e., pressure, DBA condensation oscillation, poolswell) are relatively constant along the longitudinal axis of the torus bay.

The minimum thickness requirements at the mid-bay (free-shell) location of the torus shell are governed by the primary membrane stress (P_M) obtained from the one-thirty-second STARDYNE model considering the various Mark I event combinations. For the torus shell adjacent to the ring girder (local shell), a gross structural discontinuity, the minimum thickness requirements are governed by the primary local stress (P_L). The primary local stress region extends for a distance of a 9.8550 inches or one-square-root-of-mean-radius-times-thickness ($1.0\sqrt{Rt}$) from the intersection of the ring girder longitudinally along the torus bay (Figure 4).

Code compliance for primary membrane and primary local stress intensity shall be determined based on comparison of the actual event stress intensity (i.e., from the finite-element analysis of the torus shell) to the Code allowable stress which is a function of the event service limit as defined by the structural acceptance criteria (Reference 6).

Stress Intensity	Service Limit Allowable A or B	Service Limit Allowable C
P_M	S_{MC}	Larger of 1.2 S_{MC} or 1.0 S_Y
P_L	1.5 S_{MC}	Larger of 1.8 S_{MC} or 1.5 S_Y

The Mark I program event combinations to be reviewed are those which were previously found to control the torus shell stress analysis as bounding cases (Reference 3). They are event combinations 2, 3, 14, 15, 16, 18, 19, 20, 21 and 25 (Figure 5). However, some of these event combinations can be eliminated from further consideration without increasing the conservatism as follows:

- Event combinations 2 and 3 are bounded by event combinations 14 and 15.

- The difference between event combinations, pairs 14 and 15, 18 and 19, 20 and 21, is OBE versus SSE seismic loading. The SSE load is marginally larger (i.e., much less than 20%) than the OBE load in all cases. For these pairs, the higher event numbers (i.e., the SSE event) are Level C service limit events with a minimum 20% increase in allowable stress. Therefore, the Level B lower event numbers 14, 18, and 20 will control the analyses.

Therefore, the remaining event combinations to be reviewed are 14, 16, 18, 20 and 25.

Calculation of the minimum thickness herein is based on the determination of an equivalent pressure (P_O) which will yield a hoop membrane stress equal to the event combination primary membrane or local stress intensity. Then, solving for the required minimum thickness based on compliance with the Code allowable stress intensity:

VYC-1032 ATTACHMENT A
Page 12 of 75

$(P_o)R/t \leq S_{MC}$ for P_M

or $(P_o)R/t \leq 1.5\ S_{MC}$ for P_L

where P_o - equivalent pressure (psi)
R - torus mean radius (166.292 inches)
t - required thickness (i.e., ≤ 0.584 inches)

Table 1 provides the minimum thickness requirements as calculated (Reference 19) for the two torus shell locations adjacent to the ring girder (local shell region) and at mid-bay (free-shell region). Figures 6 and 7 represent this data plotted as the permissible corroded thickness on the torus cross sections. As previously suggested, the thickness requirements adjacent to the ring girder extend longitudinally 9.8550 inches along the torus shell. In addition, on the torus shell mitre side of the ring girder, the local region shall extend 9.8550 inches beyond the mitre away from the ring girder (Figure 4). The remainder of the torus shell is governed by the mid-bay thickness requirements.

2.2 Permissible Local Reduction in Torus Shell Thickness for an Indication

An indication, which may be found upon inspection of the torus shell (Figure 4), may be acceptable if it does not meet the screening criteria of 2.1, Table 1, for required shell thickness (Figures 6 and 7) provided that it meets the local stress criteria of the Code for the particular location of concern.

A generalized compatibility analysis to determine the effect of a cylindrical depression on a uniform stress distribution was performed for a large circular plate of constant thickness (Reference 19).

Figure 6 for the free shell and Figure 7 for the local shell regions of the torus are based upon this analysis using the necessary Vermont Yankee torus parameters. Therefore, if an indication is found in these regions which does not meet the minimum wall thickness requirements

VYC-1032 ATTACHMENT A
P13/75

of Table 1 or Figure 6 (the permissible corroded thickness of the free-shell region) or Figure 7 (the permissible corroded thickness of the local shell region adjacent to the ring girder), the following procedure may be performed using the appropriate Figure 8 or 9.

The procedure for use of Figures 8 and 9 for an indication in its final-blended and as-examined state is as follows:

1. Circumscribe the area of the indication and measure the diameter (D).

2. Determine the maximum indication depth (d).

3. Assure that no additional indications are found local to the circumscribed area within 24.64 inches or two-and-one-half-square-roots-of-mean-radius-times-thickness (i.e., $2.5\sqrt{Rt}$).

4. If the criterion of step 3 is violated, repeat the procedure starting with step 1 and include any indications which violate the criterion of step 3 in the circumscribed area.

5. Review Figure 6 or 7 to determine the arc region (S) of the torus shell which contains the circumscribed indications resulting from step 1.

6. If the measured indication depth (d) is less than the permissible corroded thickness from the appropriate Figure 6 or 7, the indication is acceptable and the remaining steps 7 through 9 may be skipped.

7. Determine the circumscribed diameter multiplier (F) from the table of Figure 8 or 9 based on the arc region (S) from step 5. If the circumscribed indications extend into other arc regions, use the largest multiplier (F).

8. Determine the equivalent diameter (D′) which circumscribes the indications:

$$D' = D \times F$$

9. Using D′ and the appropriate Figure 8 or 9 curve, determine the allowable indications depth d′ and compare it to the measured depth d:

$$d \leq d'$$

Note that the allowable depth (d′) shall be measured based on the uncorroded nominal shell thickness. Adjust the allowable depth (d′) to account for reduced wall thickness measured. Subtract the difference between the original wall thickness (T_0) and the measured wall thickness (t) from the allowable depth (d′) to obtain the adjusted d′. See Appendix B for sample calculations.

VYC-1032 ATTACHMENT A
P415/75

3.0 VENT SYSTEM SHELL STRESS ANALYSIS

TES has reviewed the calculation packages (References 9 through 16) and drawings (References 17 and 18) associated with the drywell vent system and has determined that the shell thicknesses used for the vent system components during the Mark I Torus Requalification Program analyses of record were not reduced for corrosion. This philosophy was consistent with the decisions made for the torus shell as described in Section 2.0. The vent system components analyzed for shell stress are the vent pipe, vent pipe/header intersection, vent pipe/SRV Line penetrations, vent pipe/SRV Line support attachments, vent header, and downcomers.

The Mark I Torus Program vent system analyses (References 10, 13 and 14) were completed using a combination of hand calculations and two STARDYNE (Reference 8) models; a beam model (Figure 10) for general loading (Reference 9); and a detailed finite-element model (Figure 11) for the downcomer/vent header intersection (References 11, 12 and 15). The less detailed beam model analysis was possible in this case for two reasons: first, because GE provided the BWR Owner's Group detailed stress intensification factors for each specific type of BWR vent pipe/header intersection to conservatively calculate the maximum combined stress and secondly, because the anticipated stress levels in the vent system based on the initial scoping analyses appeared to be well within Code allowables for all components with the exception of the vent header at the downcomer intersection. The vent header/downcomer intersection eventually required a modification to the downcomer pairs, tie bars, even with the use of significantly more refined analytical techniques. The refined shell analysis of the vent pipe/header intersection (Reference 20) was completed using a detailed ABAQUS finite-element model (Figure 26) to determine the stress intensification factors and stresses for specific locations within the vent pipe/header intersection. The shell analyses of the four vent pipe/SRV Line penetrations (Reference 16) were completed using a combination of hand calculations and one detailed finite-element STARDYNE

model (Figure 12). The shell analysis of the vent pipe/SRV Line support attachments were completed using the computer program CYLNOZ (in accordance with WRC Bulletin 107, Franklin Research Center, 1-16-80) and are included within the SRV Line penetration analysis package (Reference 16).

Generally, as a result of low stress levels and in accordance with our five BWR clients' wishes, the final vent system analyses were completed using conservative bounding techniques to reduce costs and to provide timely results. Loads in most cases were combined absolutely for the two event combinations analyzed. These two event combinations (Reference 10), a poolswell event (event combination 19) and a vent system chugging event (event combination 21), were determined to conservatively bound the remaining twenty-five combinations listed in the structural acceptance criteria (Reference 6). The resultant stress intensities were also conservatively calculated without regard to location and were compared to Code allowables.

Based on our recent review of this work, it does appear that an additional margin exists for some of the vent system components with regard to minimum shell thickness requirements and the remaining shell thicknesses available for corrosion to be reported on in Sections 3.1 and 3.2. It should be noted that the aforementioned analysis conservatisms could be reduced, through a moderate effort, using less conservative stress analysis techniques and the presently available loads.

3.1 Minimum Vent System Shell Thickness Requirements

TES has reviewed the vent system analysis packages (References 10 11 and 20) to determine the minimum shell thickness requirements for each of the major components: the vent pipe, vent pipe/header intersection, vent header and downcomers. The calculation of the minimum thickness requirements (References 19 and 20) is based on the methodology presented in Section 2.1 for the torus shell.

As described in Section 3.0, because of the known available margins, much of the vent system stress analysis was completed in a con-

VYC-1032 ATTACHMENT A
PG17/75

servative fashion by hand. In most instances the amount of data presently available without completing a more refined analysis for each of the major components is limited. Therefore, additional conservative assumptions were required to determine the minimum vent system shell thickness requirements and resulting shell thickness remaining for corrosion for the major component locations as provided in Table 2. The vent pipe and vent header thickness requirements are determined for the free shell and the local shell regions adjacent to the vent mitred joint, the downcomers and vent pipe/header intersection as defined in Figure 13. The downcomer thickness requirements are determined for the free shell and the local shell regions adjacent to the downcomer mitred joint as defined in Figure 16. The vent pipe/header intersection thickness requirements are determined for the local shell regions adjacent to the stiffeners, vent head (cap), vent pipe and vent header, as defined in Figure 27. The vent pipe thickness requirements are determined for the local shell regions adjacent to the SRV Line penetrations and SRV Line support attachments as defined in Figures 19, 20 and 24 (SRV Lines A, B, C and D).

3.2 Permissible Local Reduction in Vent System Thickness for an Indication

An indication which may be found upon inspection of the vent system components - the vent pipe, vent pipe/header intersection, vent pipe/SRV Line penetrations, vent pipe/SRV Line support attachments, vent header, downcomers and downcomer miters - may be acceptable if it does not meet the screening criteria of 3.1, Table 2, provided that it meets the local stress criteria of the Code for the particular location of concern.

The generalized compatibility analysis (References 19 and 20), as described in Section 2.2, was used to develop Figures 14 through 32 herein.

The procedure for the use of Figures 14 through 32 for an indication in its final-blended and as-examined state is as follows:

VYC-1032 ATTACHMENT A

PG 18/75

1. Circumscribe the area of the indication and measure the diameter (D).

2. Determine the maximum indication depth (d).

3. Assure that no additional indications are found local to the circumscribed area within two-and-one-half-square-roots-of-mean-radius-times-thickness (i.e., 2.5√Rt) as listed below.

Vent System Component	Thickness in	Radius in	2.5√Rt in
Vent Pipe	.250	40.625	7.97
Vent Pipe/Hdr Inter.	.250	40.625	7.97
	.4375	40.625	10.54
Vent Pipe/SRV Penet.	.250	40.625	7.97
Vent Pipe/SRV Sup't	.250	40.625	7.97
Vent Header	.250	28.625	6.69
Downcomer	.250	11.875	4.31
	.375	11.875	5.28

4. If the criterion of step 3 is violated, repeat the procedure starting with step 1 and include any indications which violate the criterion of step 3 in the circumscribed area.

5. If the measured indication depth (d) is less than the permissible corroded thickness (remaining thickness) of Table 2 for the appropriate location, the indication is acceptable and the remaining steps may be skipped.

6. Review Figures 14 through 32 to determine the appropriate curve for the region of the vent system that contains the circumscribed indications. P419/75

7. Using D′ and the appropriate figure and curve, determine the allowable indications depth d′ and compare it to the measured depth d:

$$d \leq d'$$

Note that the allowable depth (d′) shall be measured based on the uncorroded nominal shell thickness. Adjust the allowable depth (d′) to account for reduced wall thickness measured. Subtract the difference between the original wall thickness (T_0) and the measured wall thickness (t) from the allowable depth (d′) to obtain the adjusted d′. See Appendix B for sample calculations.

TELEDYNE ENGINEERING SERVICES

VYC-1032 ATTACHMENT A
Pg 20/75

4.0 REFERENCES

1. YAEC P.O. Number QA41434.

2. TES Analysis Package 5319-20, Rev. 1, Vermont Yankee Torus Shell Analysis.

3. TES Technical Report TR-5319-1, Rev. 2, Mark I Containment Program, Plant Unique Analysis Report of the Torus Suppression Chamber for Vermont Yankee Nuclear Power Station.

4. ASME Boiler and Pressure Vessel Code, Section III, Division 1, Subsection NE, Class MC Vessels, 1974 Edition through Summer 1977 Addenda.

5. Mark I Containment Program Load Definition Report, Document Number NEDO-21888, Rev. 2, November 1981.

6. Mark I Containment Program, Structural Acceptance Criteria, Plant Unique Analysis Application Guide, Document Number NEDO-24583-1, October 1979.

7. TES Computer Code TG-8, DISTRESS Computer Program Check, October 13, 1982.

8. Stardyne User Information Manual, January 1984.

9. TES Calculation Package 2252-10, Rev. 1, Vermont Yankee, Vent System Stardyne Beam Model Geometry.

10. TES Calculation Package 2252-5, Rev. 1, Vent Header and Intersection With Main Vent, Combined Loads, Vermont Yankee.

11. TES Calculation Package 2252-4, Rev. 1, Combined Loads, Vent System, Vent Header/Downcomer Intersection, Vermont Yankee.

TELEDYNE ENGINEERING SERVICES

VYC-1032 ATTACHMENT A
P421/75

4.0 REFERENCES (Continued)

12. TES Calculation Package 2252-3, Rev. 0, Vermont Yankee, Vent Header/Downcomer Intersection Analysis, Downcomer Chugging Load.

13. TES Calculation Package 5320-16, Rev. 0, Torus Vent System Acoustic Pressure Loads Evaluation - For All 5 Plants.

14. TES Calculation Package 5319-22, Rev. 0, Vermont Yankee, Vent System Fatigue Analysis.

15. TES Calculation Package 2252-2, Rev. 0, Vermont Yankee, Vent Header/Downcomer Intersection, Downcomer Condensation Oscillation Loading.

16. TES Calculation Package 5319-28, Rev. 0, SRV - Vent Pipe Penetration Stress Evaluation, Vermont Yankee, SRV Lines A-D.

17. CB&I Contract No. 9-6202, Drawing Numbers: 200, Rev 1; 201, Rev 3; 211, Rev 0; 213, Rev 1; 214, Rev 6; and 219, Rev 4.

18. Vermont Yankee Project, Drawing Numbers:
5920-9987 SHT 1 of 4, Rev. 0; 6202-200, Rev. 0; 6202-201, Rev. 0;
6202-202, Rev. 0; 6202-211, Rev. 0; 6202-213, Rev. 0;
6202-214, Rev. 0; 6202-219, Rev. 0;

19. TES Calculation Package 7426-1, Rev. 1, Mark I Torus Shell and Vent System Thickness Requirements, Vermont Yankee Nuclear Station. ⚠

20. TES Calculation Package 7426-2, Rev. 1, Calculation of Stress Intensification Factors for the Torus Vent Pipe/Header Intersection for Vermont Yankee. ⚠

TELEDYNE
ENGINEERING SERVICES

VYC-1032 ATTACHMENT A
Pg 22/75

4.0 REFERENCES (Continued)

21. TES Project Quality Assurance Program, Project 7426, Rev. 0, November 28, 1990, Yankee Atomic Electric Company.

TABLE 1

MINIMUM TORUS SHELL THICKNESS REQUIREMENTS
VERMONT YANKEE NUCLEAR STATION

Elem/Arc No. (Mid-bay)	Required Thickness (inches)	Remaining Thickness (inches)
27/S1	.236	.348
25/S2	.269	.315
23/S3	.305	.279
21/S4	.352	.232
19/S5	.359	.225
17/S6	.392	.192
17/S7	.392	.192
15/S8	.360	.224
13/S9	.322	.262
11/S10	.259	.325
(Ring Girder) 159/S1	.150	.434
153/S2	.124	.460
147/S3	.150	.434
141/S4	.113	.471
132/S5	.134	.450
132/S6	.134	.450
126/S7	.151	.433
120/S8	.148	.436
114/S9	.181	.403

NOTE: Only lower shell elements are listed.

TABLE 2

MINIMUM VENT SYSTEM THICKNESS REQUIREMENTS
VERMONT YANKEE NUCLEAR STATION

Component Location	Shell Thickness (in)	Required Thickness (in)	Remaining Thickness (in)
Vent Pipe	.250	.158	.092
Vent Header	.250	.111	.139
Downcomer	.250	.156	.094
Downcomer	.375	.235	.140
Vent Pipe at Drywell	.250	.105	.145
Vent Header at Mitre Joint	.250	.234	.016
Vent Header at Downcomer	.250	.244	.006
Downcomer at Mitre Joint	.250	.104	.146
Downcomer at Mitre Joint	.375	.156	.219
VP/SRV (A,B,C,D) Penetration at Nozzle Inter.	.750	.630	.120
VP/SRV (A,B,C,D) Penet. at Edge of Wagon Wheel	.750	.568	.182
VP/SRV (A,B,C,D) Penet. at Edge of 3/4" Pad	.250	.241	.009
VP/SRV (A,B,C,D) Lower Support	.250	.241	.009

VYC-1032 ATTACHMENT A
P425/75

TABLE 2 (Continued)

MINIMUM VENT SYSTEM THICKNESS REQUIREMENTS
VERMONT YANKEE NUCLEAR STATION

Component Location	Shell Thickness (in)	Required Thickness (in)	Remaining Thickness (in)
"Vent Pipe/Header Intersection"			
Adjacent to Stiffeners	.2500	.2290	.0210
At Vent Pipe Branch	.2500	.1304	.1196
At Ring Header Branch	.2500	.1730	.0770
At Vent Head	.4375	.1421	.2954
At Vent Head Branch	.2500	.1304	.1196

VYC-1032 ATTACHMENT A
P426/75

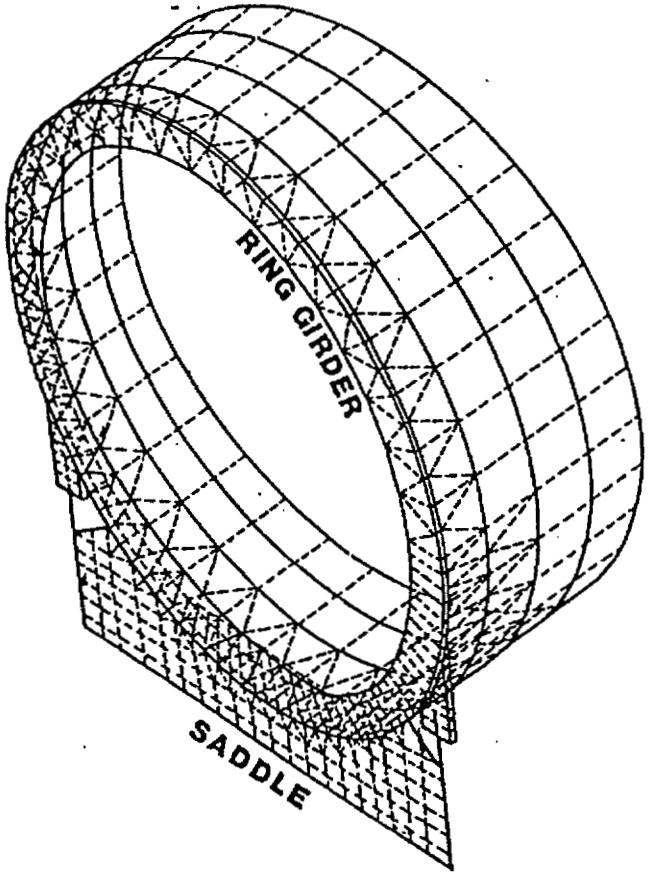

ROTATED AXIS VIEW - VERMONT YANKEE
1/32 DETAILED SHELL MODEL

FIGURE 1

VYC-1032 ATTACHMENT A
P427/75

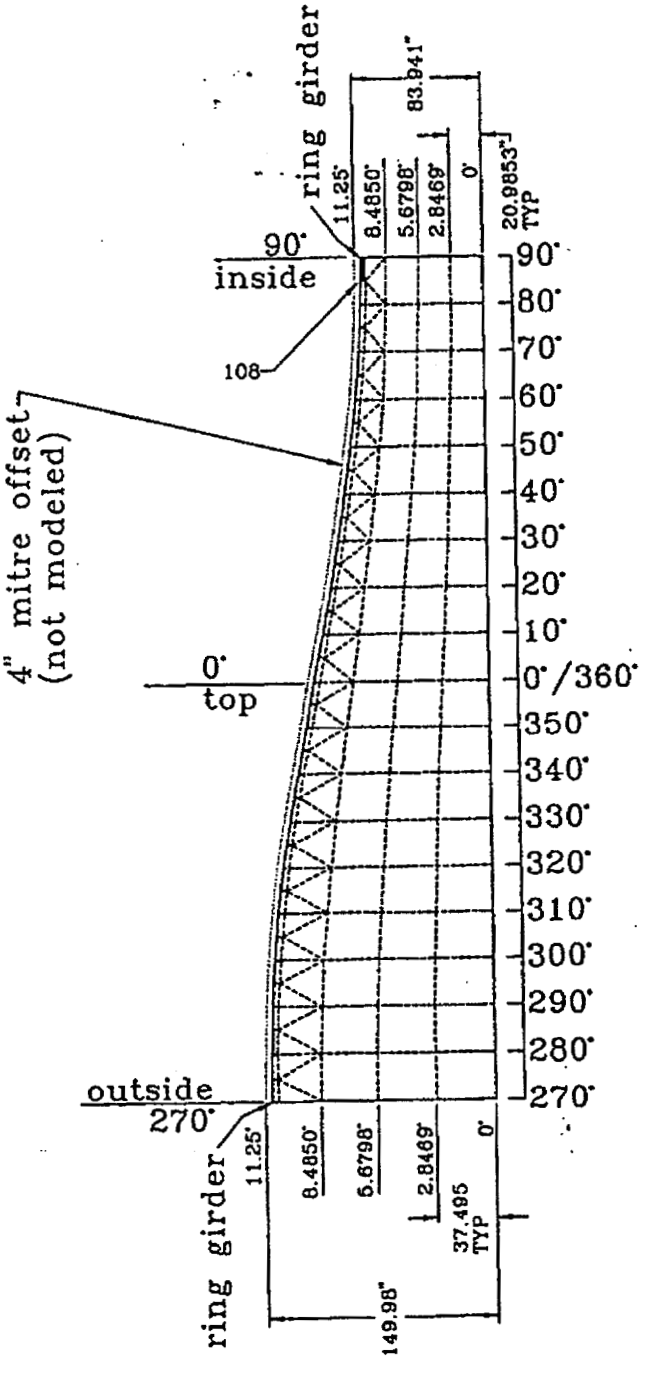

MAXIMUM STRESS LOCATIONS–VERMONT YANKEE
1/32 MODEL–UPPER HALF OF SHELL

FIGURE 2

VYC-1032 ATTACHMENT A
P428/75

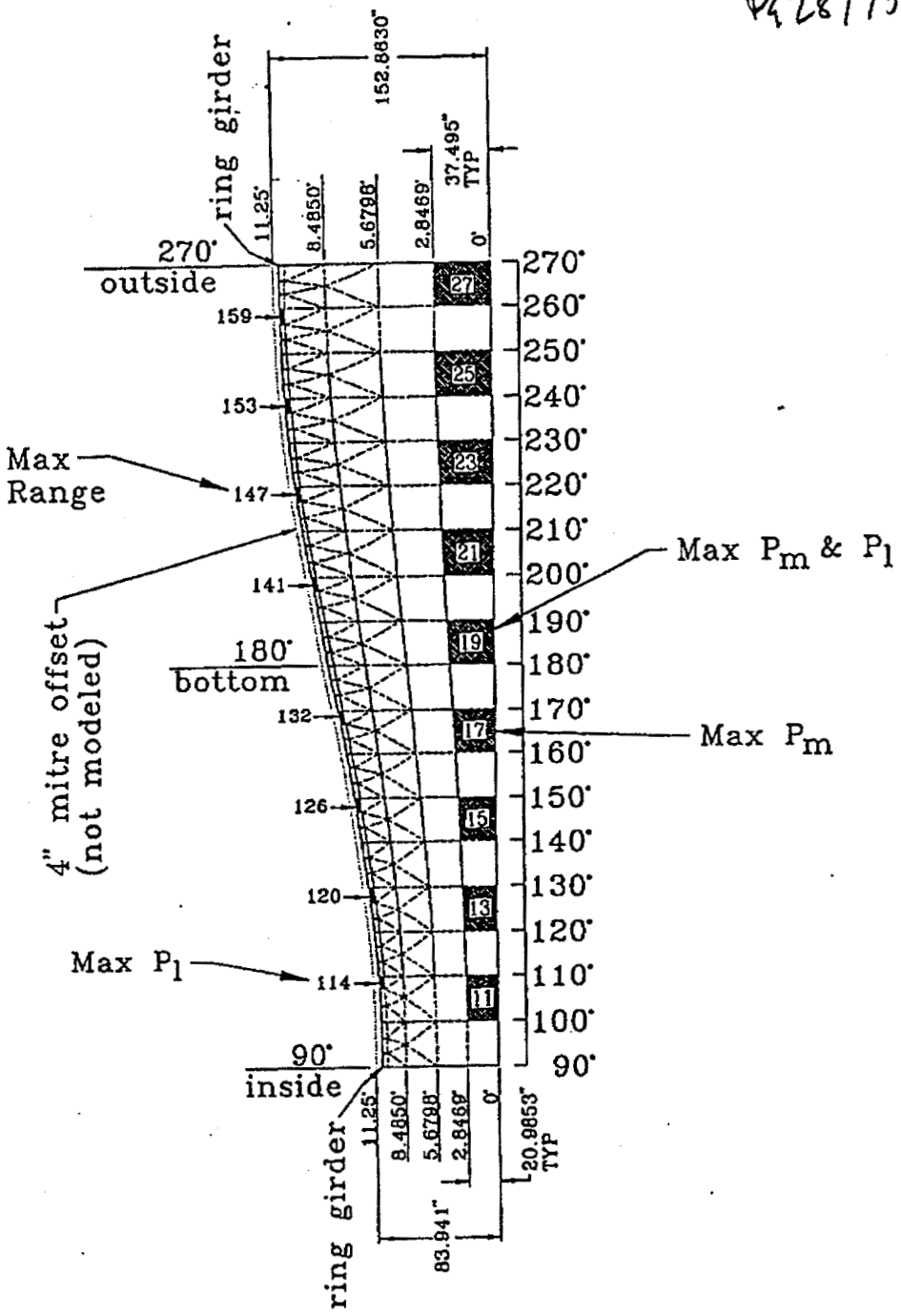

MAXIMUM STRESS LOCATIONS–VERMONT YANKEE
1/32 MODEL–LOWER HALF OF SHELL

FIGURE 3

VYC-1032 ATTACHMENT A
P429/75

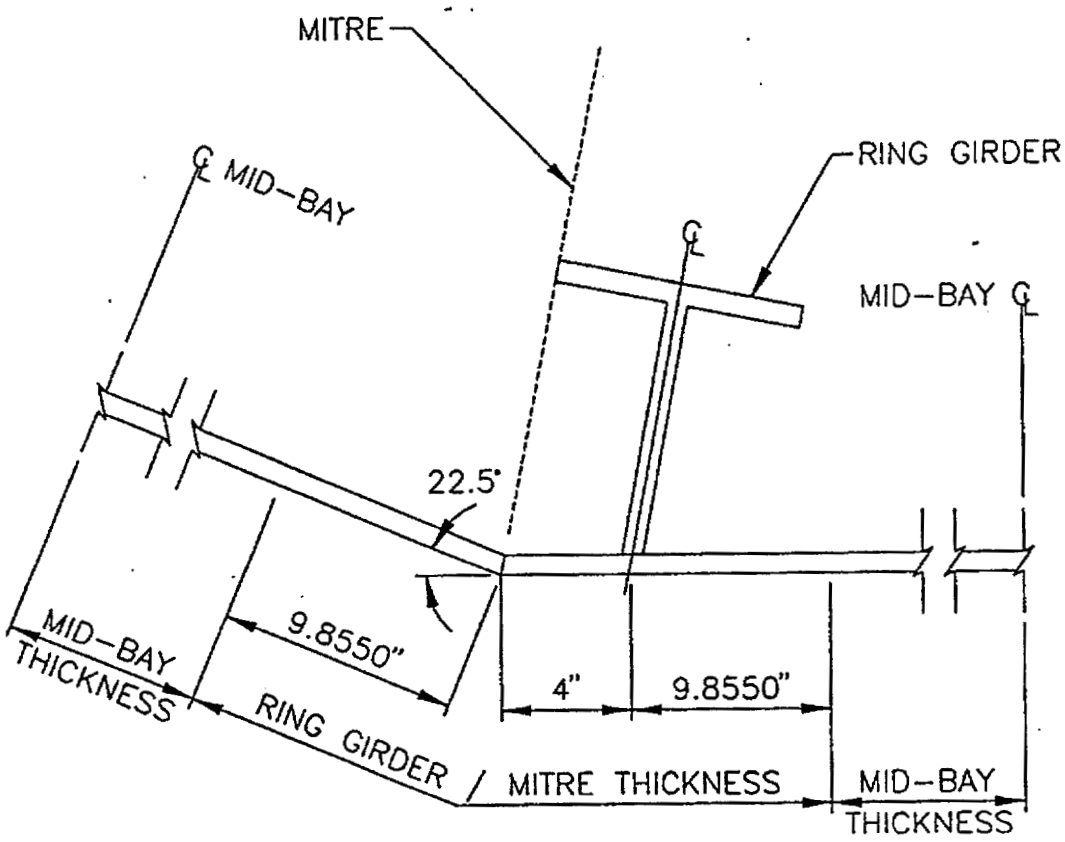

$$1.0\sqrt{RT} = 9.8550"$$

LOCAL TORUS SHELL STRESS REGIONS
VERMONT YANKEE NUCLEAR STATION

FIGURE 4

TELEDYNE
ENGINEERING SERVICES

VYC-1032 ATTACHMENT A
P430/75

CLASS MC COMPONENTS AND INTERNAL STRUCTURES

EVENT COMBINATIONS		SRV	SRV + EQ		SBA IBA		SBA + EQ IBA + EQ				SBA + SRV IBA + SRV		SBA + SRV + EQ IBA + SRV + EQ				DBA		DBA + EQ				DBA + SRV		DBA + EQ + SRV			
						CO, CH			CO, CH			CO, CH			CO, CH		PS (1)	CO, CH	PS		CO, CH		PS	CO, CH	PS		CO, CH	
TYPE OF EARTHQUAKE			O	S			O	S	O	S			O	S	O	S			O	S	O	S			O	S	O	S
COMBINATION NUMBER		1	2	3	4	5	6	7	8	9	10	11	12	13	14	15	16	17	18	19	20	21	22	23	24	25	26	27
LOADS																												
Normal (2)	N	X	X	X	X	X	X	X	X	X	X	X	X	X	X	X	X	X	X	X	X	X	X	X	X	X	X	X
Earthquake	EQ		X	X			X	X	X	X			X	X	X	X			X	X	X	X			X	X	X	X
SRV Discharge	SRV	X	X	X							X	X	X	X	X	X							X	X	X	X	X	X
LOCA Thermal	T_A				X	X	X	X	X	X	X	X	X	X	X	X	X	X	X	X	X	X	X	X	X	X	X	X
LOCA Reactions	R_A				X	X	X	X	X	X	X	X	X	X	X	X	X	X	X	X	X	X	X	X	X	X	X	X
LOCA Quasi-Static Pressure	P_A				X	X	X	X	X	X	X	X	X	X	X	X	X	X	X	X	X	X	X	X	X	X	X	X
LOCA Pool Swell	P_{PS}																X		X	X			X		X	X		
LOCA Condensation Oscillation	P_{CO}					X			X	X		X			X	X		X			X	X		X			X	X
LOCA Chugging	P_{CH}					X			X	X		X			X	X		X			X	X		X			X	X
STRUCTURAL ELEMENT	EQN																											
External Class MC																												
Torus, External Vent Pipe, Bellows, Drywell (at Vent), Attachment Welds, Torus Supports, Seismic Restraints	1	A	B	C	A	A	B	C	B	C	A	A	B	C	B	C	A (3, 6)	A	B (3, 6)	C	B	C	C	C	C	C	C	C
Internal Vent Pipe																												
General and Attachment Welds	2	A	B	C	A	A	B	C	B	C	A	A	B	C	B	C	A (3, 5)	A	B (3, 5)	C	B	C	C	C	C	C	C	C
At Penetrations (e.g., Header)	3	A	B	C	A	A	B	C	B	C	A	A	B	C	B	C	A (3)	A	B (3)	C	B	C	C	C	C	C	C	C
Vent Header																												
General and Attachment Welds	4	A	B	C	A	A	B	C	B	C	A	A	B	C	B	C	A (3, 5)	A	B (3, 5)	C	B	C	C	C	C	C	C	C
At Penetrations (e.g., Downcomers)	5	A	B	C	A	A (4)	B	C	B (4)	C	A	A (4)	B	C	B (4)	C	A (3, 4, 5)	A (4)	B (3, 4, 5)	C	B (4)	C	C	C	C	C	C	C
Downcomers																												
General and Attachment Welds	6	A	B	C	A	A	B	C	B	C	A	A	B	C	B	C	A (3, 5)	A	B (3, 5)	C	B	C	C	C	C	C	C	C
Internal Supports	7	A	B	C	A	A	B	C	B	C	A	A	B	C	B	C	A	A	B	C	B	C	C	C	C	C	C	C
Internal Structures																												
General	8	A	B	C	A	A	C	D	C	D	C	C	D	E	D	E	E	E	E	E	E	E	E	E	E	E	E	E
Vent Deflector	9	A	B	C	A	A	C	D	C	D	C	C	D	D	D	D	D	D	D	D	D	D	D	D	D	D	D	D

MARK I STRUCTURAL ACCEPTANCE CRITERIA EVENT COMBINATIONS

FIGURE 5

VYC-1032 ATTACHMENT: A
P431/75

PERMISSIBLE CORRODED THICKNESS FOR THE TORUS CROSS-SECTION AT MID-BAY (FREE SHELL REGION) VERMONT YANKEE NUCLEAR STATION

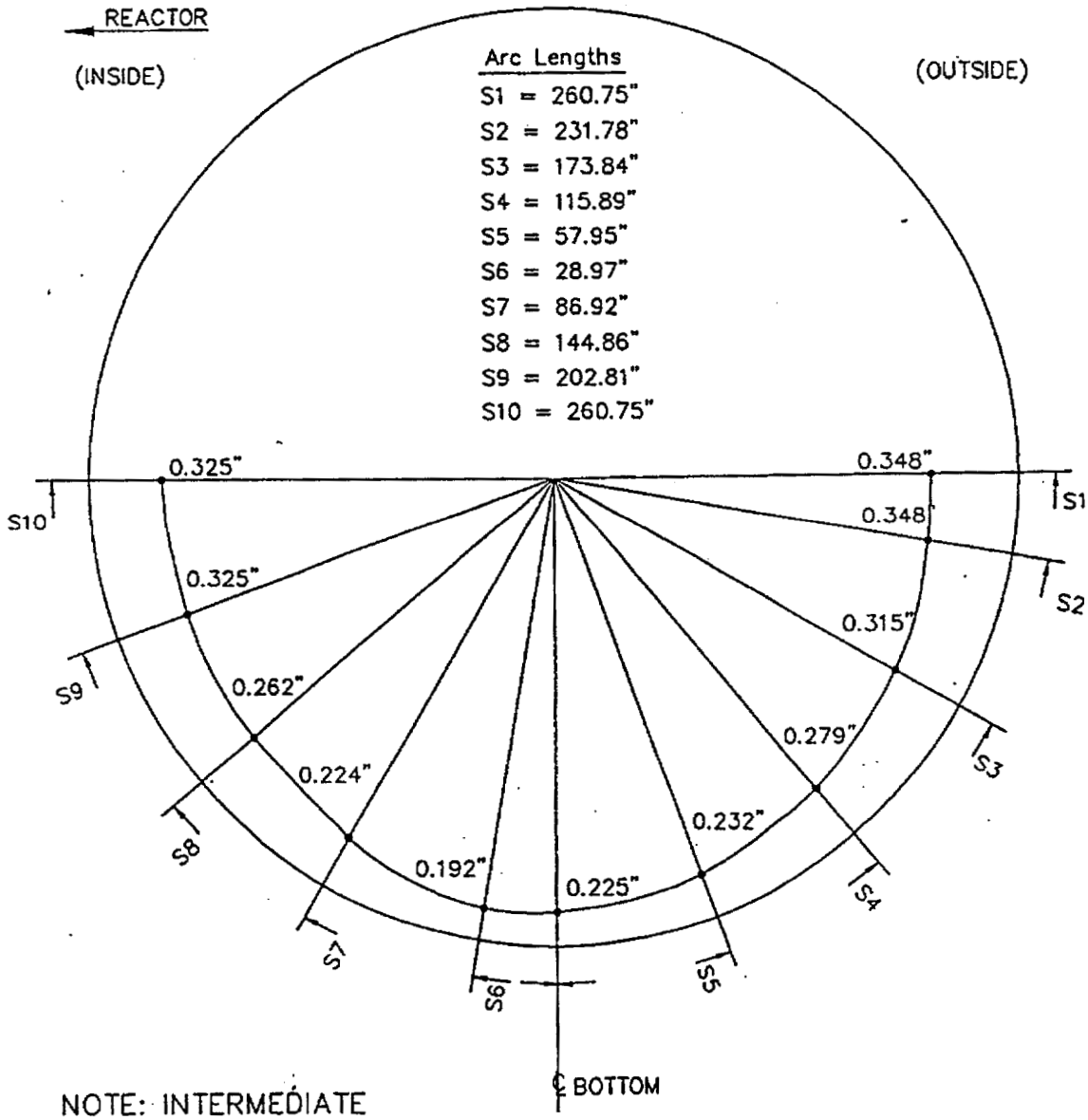

NOTE: INTERMEDIATE VALUES MAY BE INTERPOLATED

FIGURE 6

VYC-1032 ATTACHMENT A
P432/75

PERMISSIBLE CORRODED THICKNESS FOR THE TORUS CROSS-SECTION ADJACENT TO RING GIRDER (LOCAL SHELL REGION) VERMONT YANKEE NUCLEAR STATION

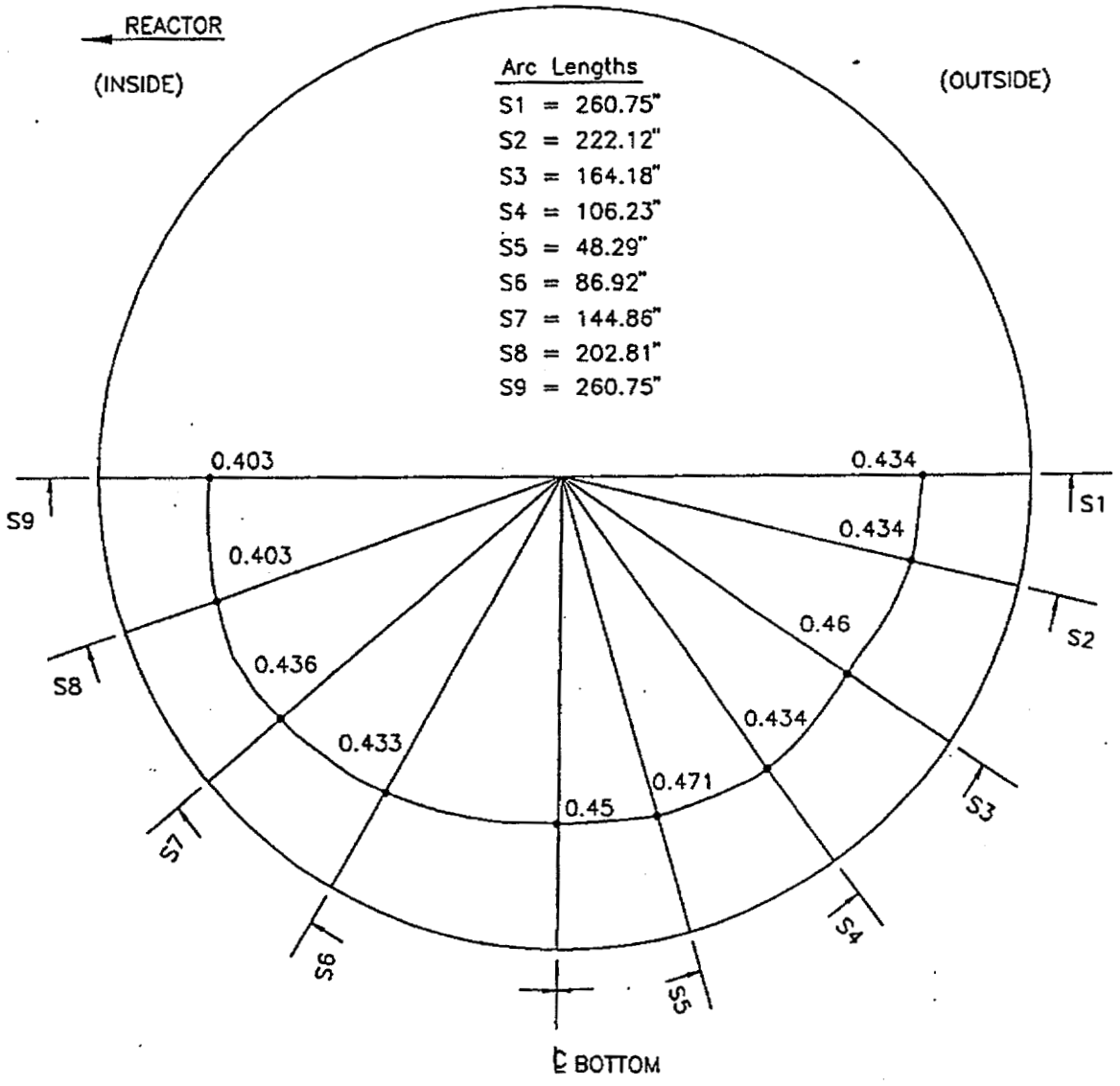

NOTE: INTERMEDIATE VALUES MAY BE INTERPOLATED

FIGURE 7

VYC-1032 ATTACHMENT A
Pg 33/75

PERMISSIBLE SIZE RANGE FOR INDICATION FREE SHELL REGION OF THE TORUS VERMONT YANKEE NUCLEAR STATION

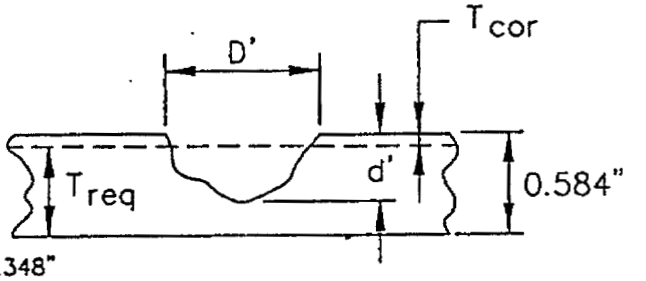

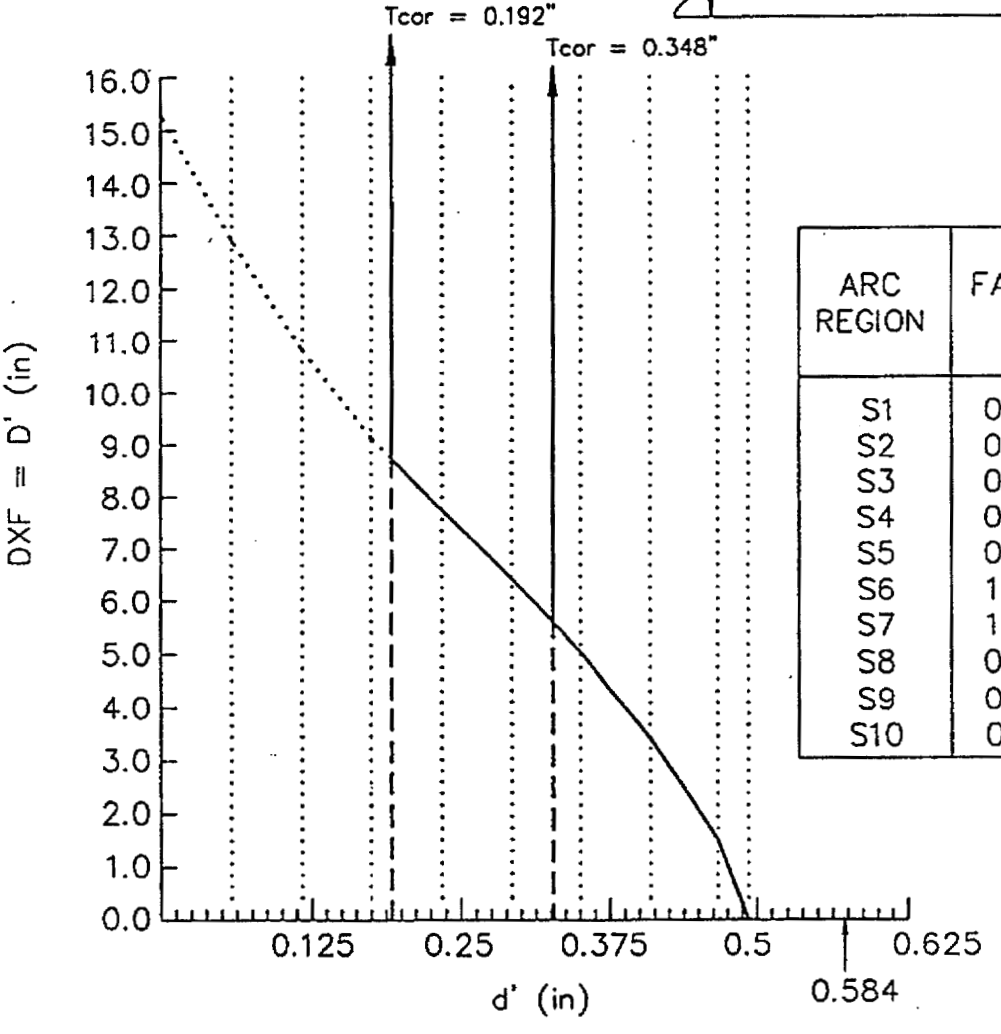

ARC REGION	FACTOR "F"	GEN CORR. Tcor
S1	0.776	0.348
S2	0.828	0.315
S3	0.883	0.279
S4	0.948	0.232
S5	0.957	0.225
S6	1.000	0.192
S7	1.000	0.192
S8	0.958	0.224
S9	0.906	0.262
S10	0.812	0.325

FIGURE 8

VYC-1032 ATTACHMENT A
Pg 34/75

PERMISSIBLE SIZE RANGE FOR INDICATION RING GIRDER REGION OF THE TORUS VERMONT YANKEE NUCLEAR STATION

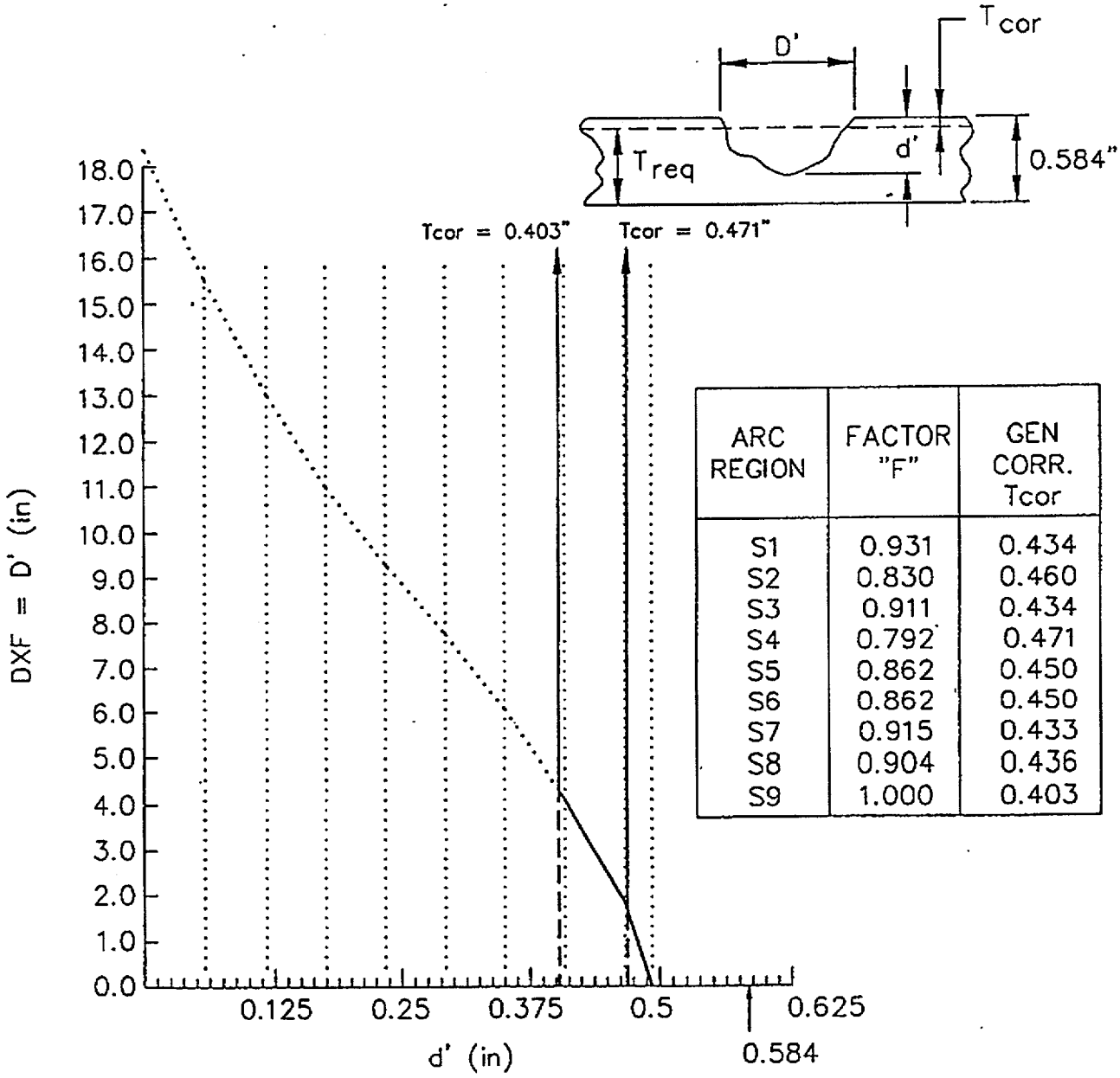

ARC REGION	FACTOR "F"	GEN CORR. Tcor
S1	0.931	0.434
S2	0.830	0.460
S3	0.911	0.434
S4	0.792	0.471
S5	0.862	0.450
S6	0.862	0.450
S7	0.915	0.433
S8	0.904	0.436
S9	1.000	0.403

FIGURE 9

TELEDYNE ENGINEERING SERVICES

VYC-1032 ATTACHMENT A
P435/75

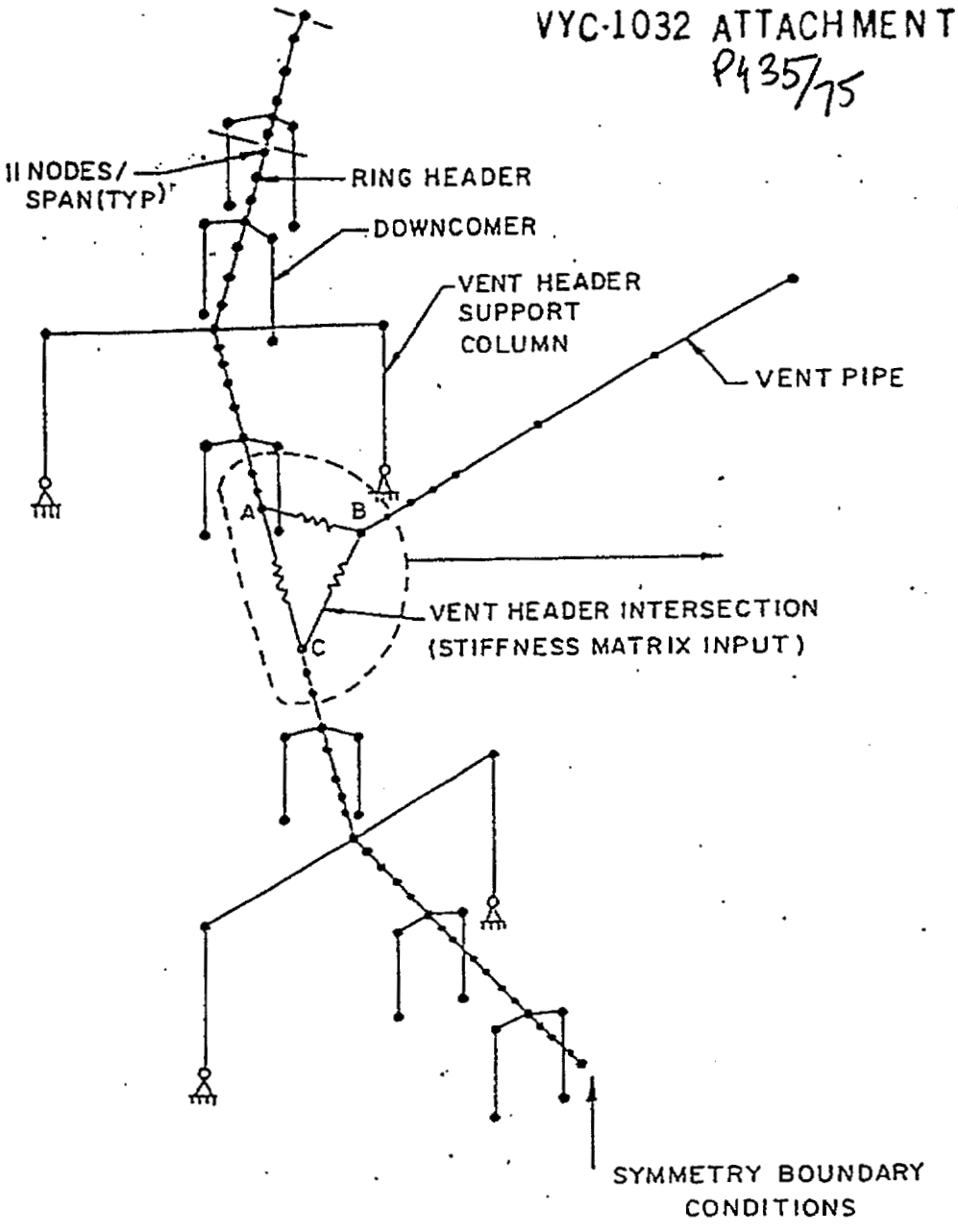

VENT SYSTEM BEAM MODEL,
VERMONT YANKEE NUCLEAR STATION

FIGURE 10

VYC-1032 ATTACHMENT A
P436/75

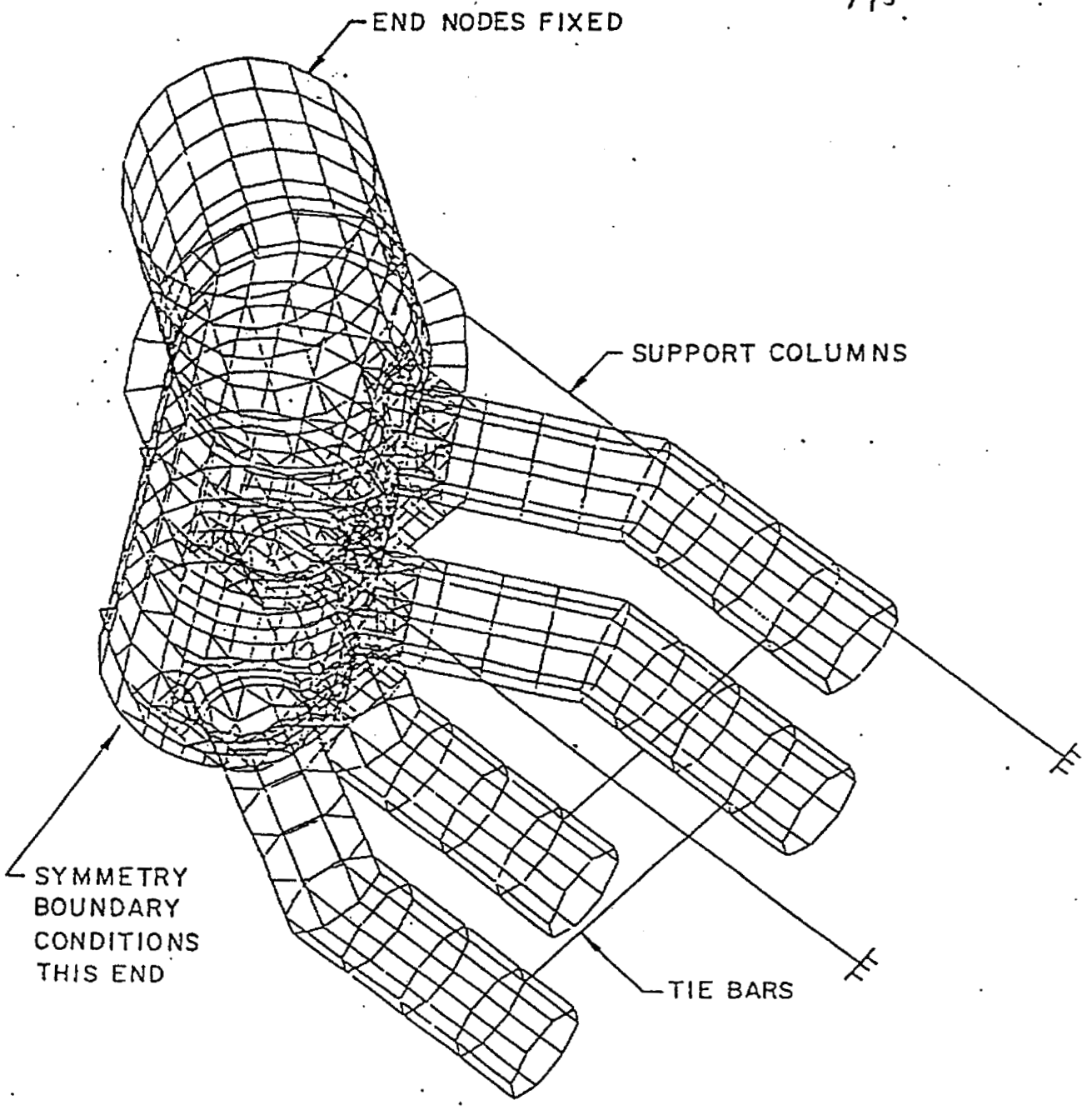

VENT HEADER/DOWNCOMER INTERSECTION MODEL,
VERMONT YANKEE NUCLEAR STATION

FIGURE 11

VYC-1032 ATTACHMENT A
P437/15

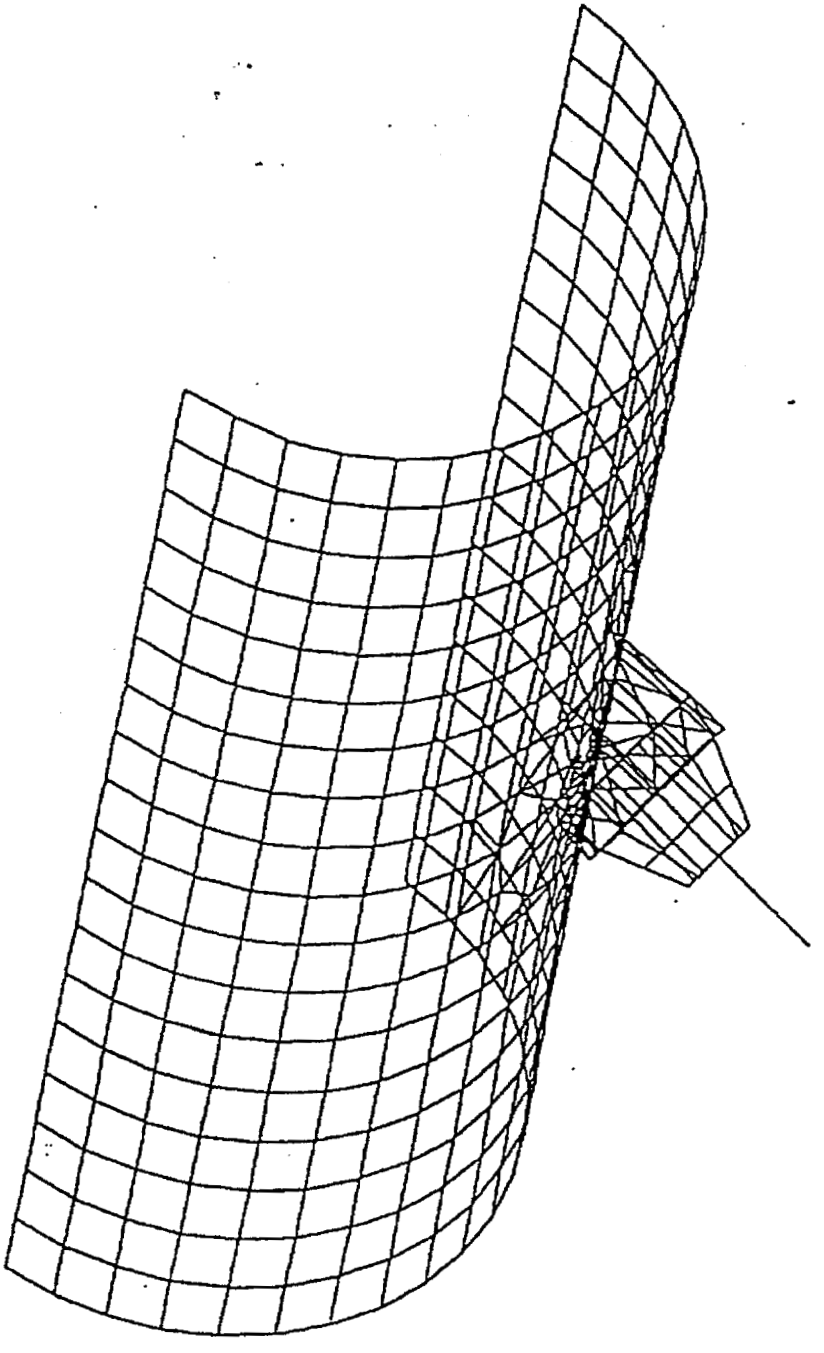

VENT PIPE/SRV LINES A THRU D PENETRATION STARDYNE COMPUTER MODEL, VERMONT YANKEE NUCLEAR STATION

FIGURE 12

VYC-1032 ATTACHMENT :A
P438/75

FREE AND LOCAL SHELL REGIONS FOR THE VENT HEADER VERMONT YANKEE NUCLEAR STATION

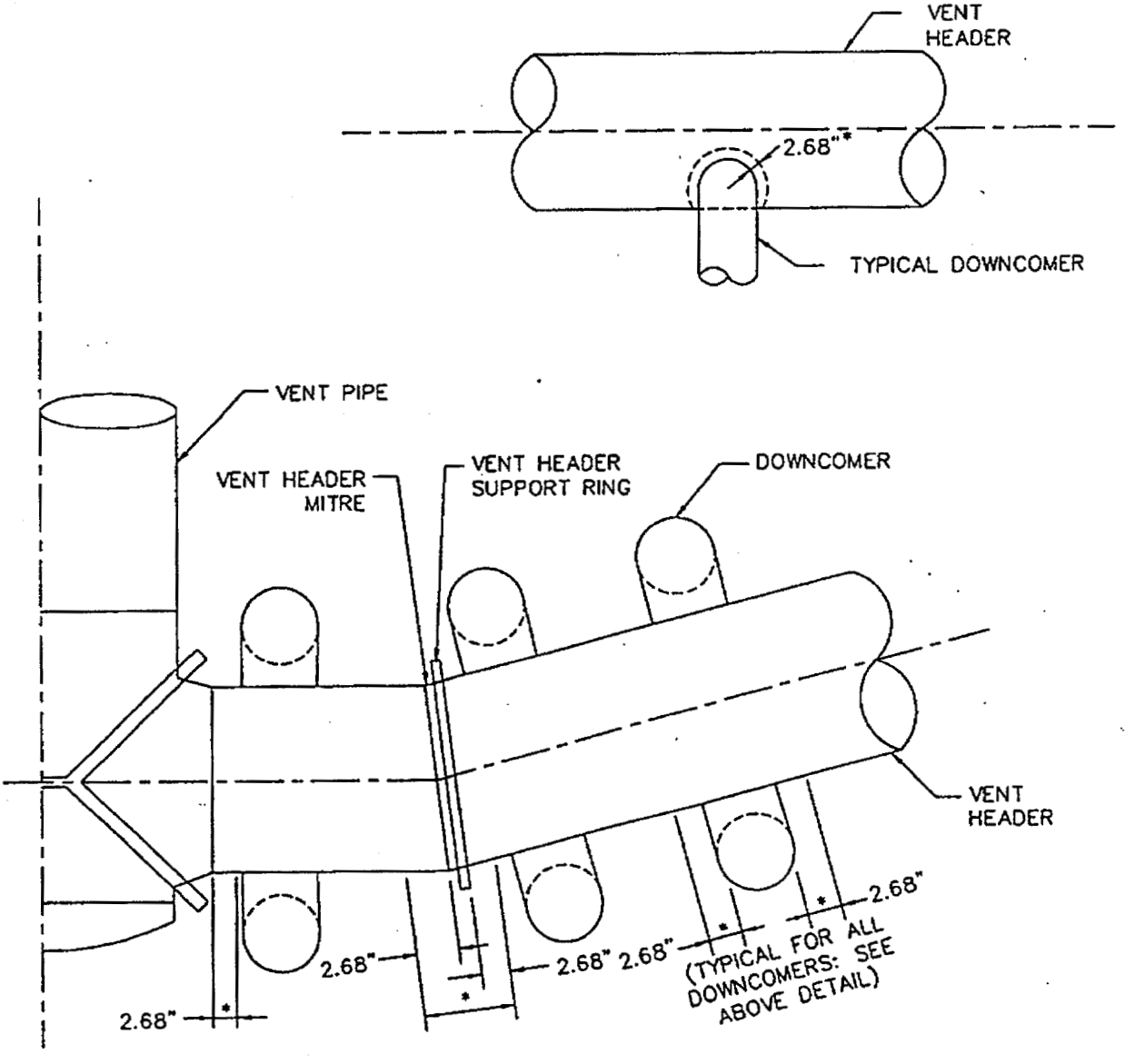

* LOCAL REGIONS ($1.0\sqrt{RT}$) = 2.68"

FIGURE 13

VYC-1032 ATTACHMENT A
P439/75

PERMISSIBLE SIZE RANGE FOR INDICATION
VENT PIPE
VERMONT YANKEE NUCLEAR STATION

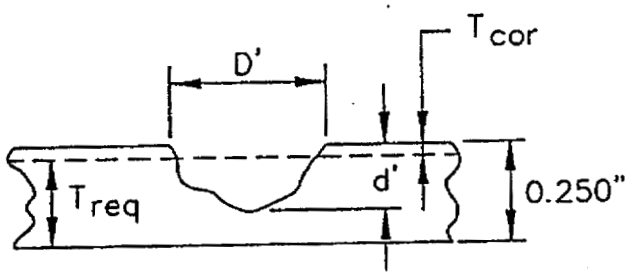

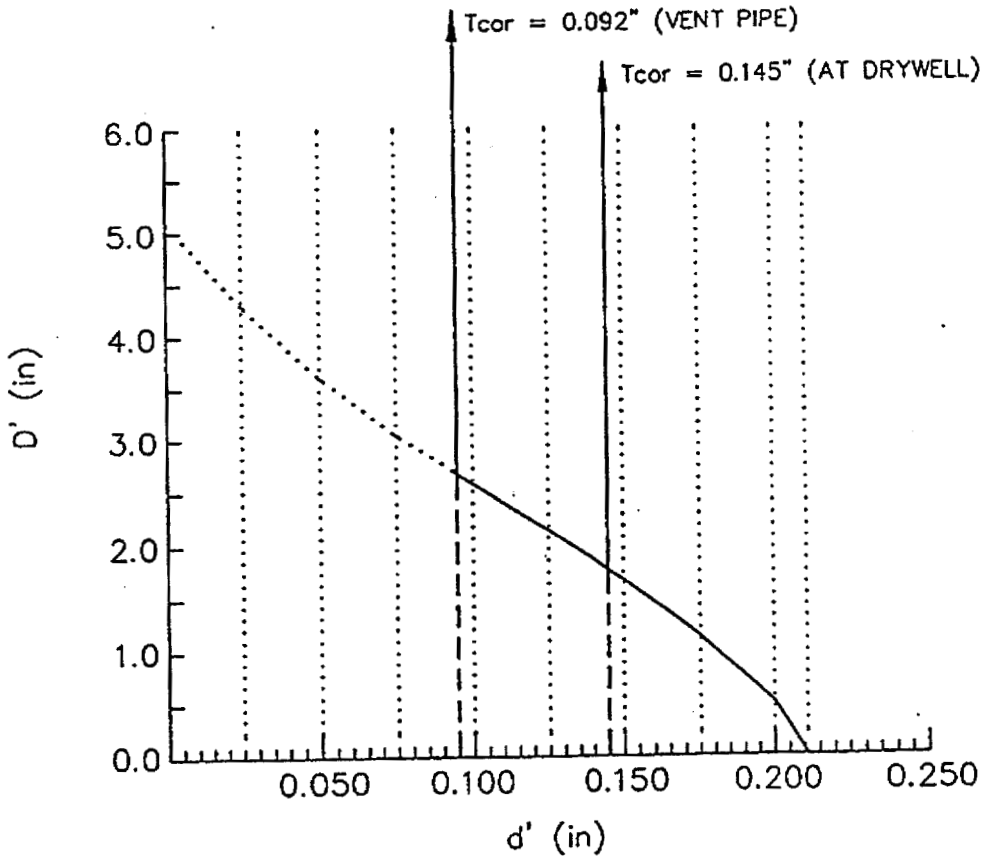

FIGURE 14

VYC-1032 ATTACHMENT A
P4 40/75

PERMISSIBLE SIZE RANGE FOR INDICATION
VENT HEADER
VERMONT YANKEE NUCLEAR STATION

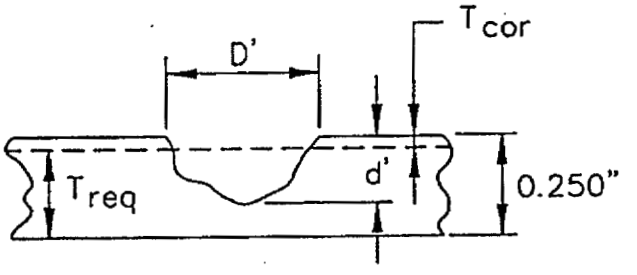

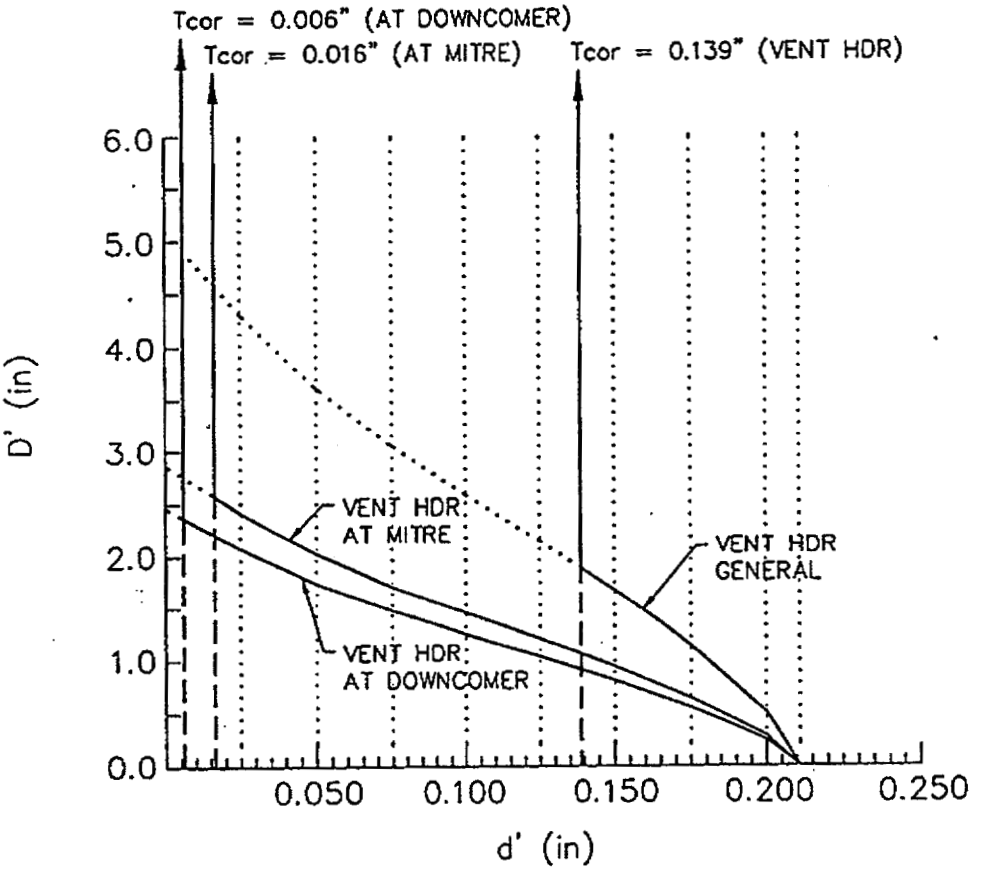

FIGURE 15

VYC-1032 ATTACHMENT A
P41/75

FREE AND LOCAL SHELL REGIONS
FOR THE DOWNCOMERS
VERMONT YANKEE NUCLEAR STATION

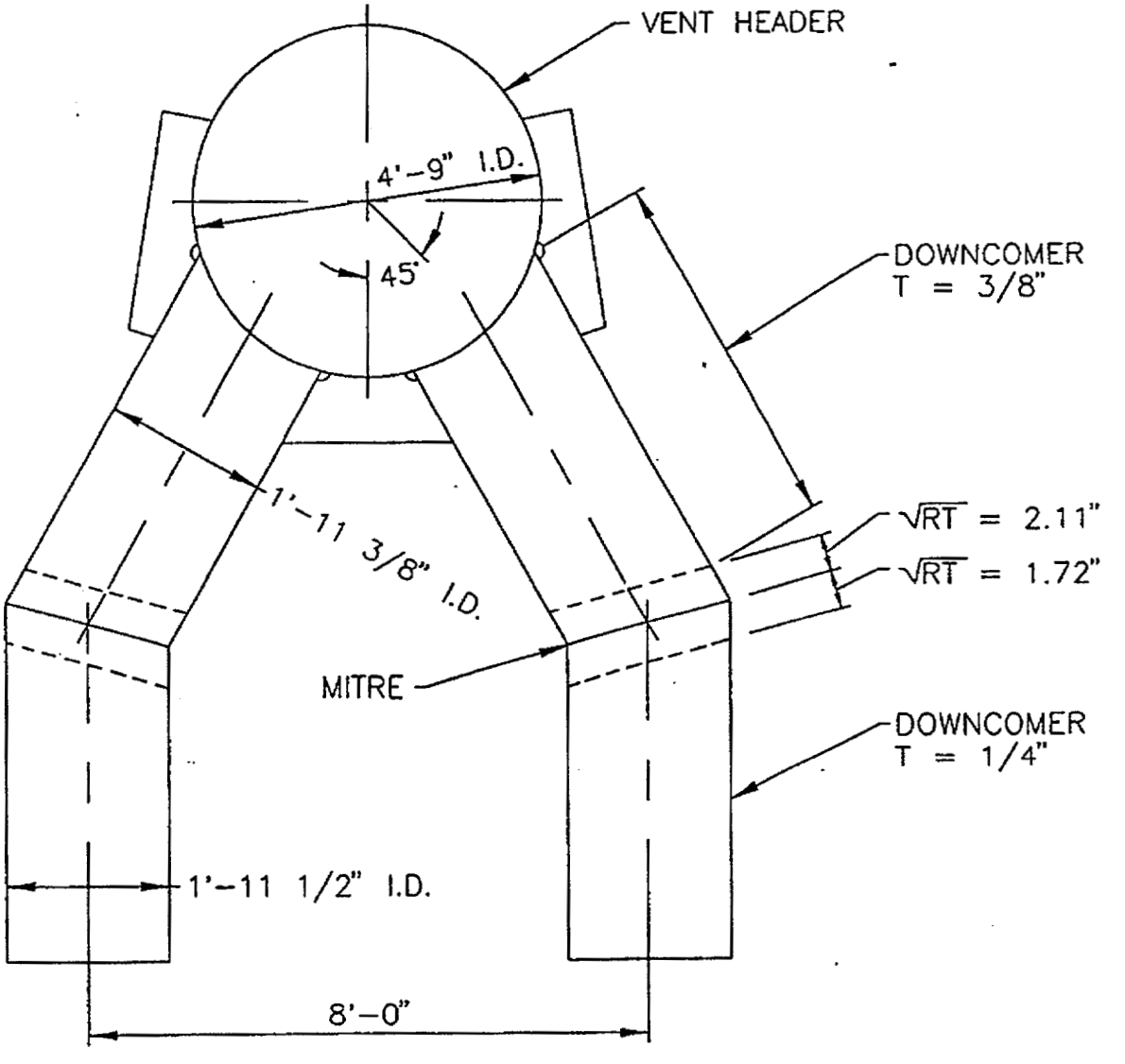

FIGURE 16

PERMISSIBLE SIZE RANGE FOR INDICATION LOWER DOWNCOMER VERMONT YANKEE NUCLEAR STATION

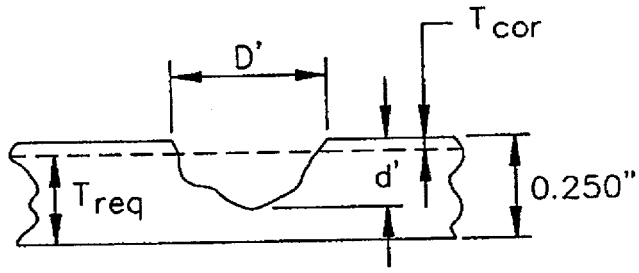

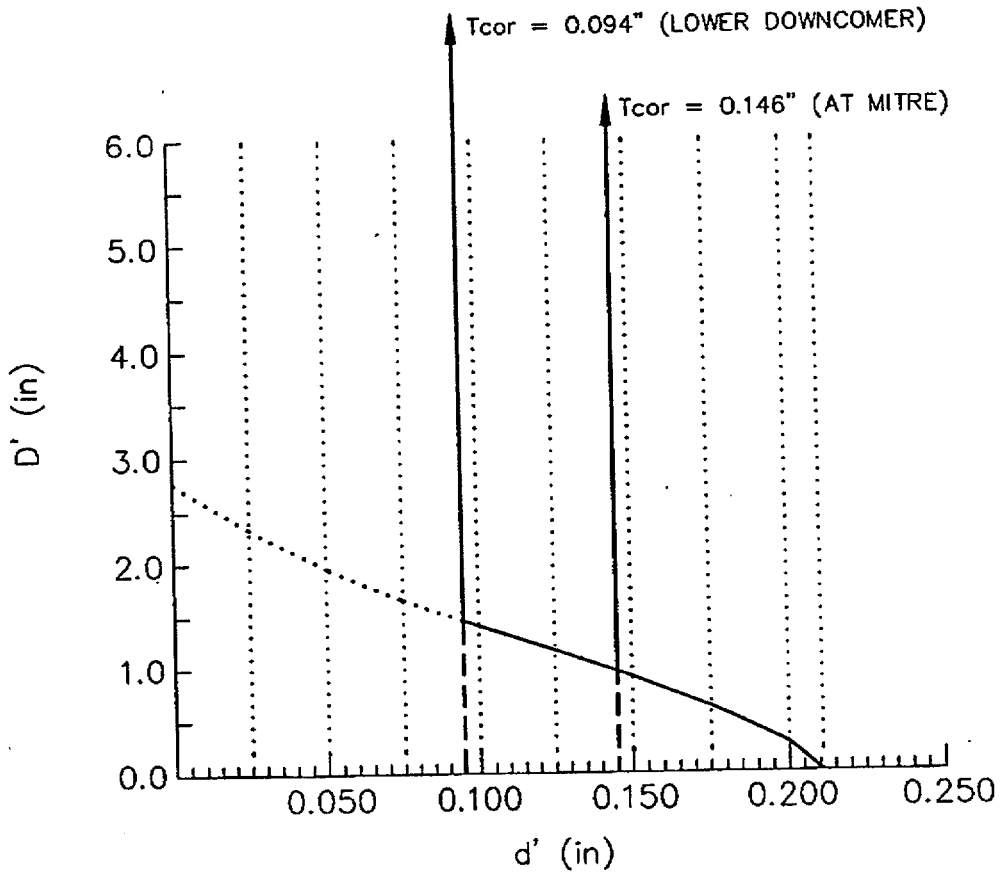

FIGURE 17

VYC-1032 ATTACHMENT A
P443/75

PERMISSIBLE SIZE RANGE FOR INDICATION UPPER DOWNCOMER VERMONT YANKEE NUCLEAR STATION

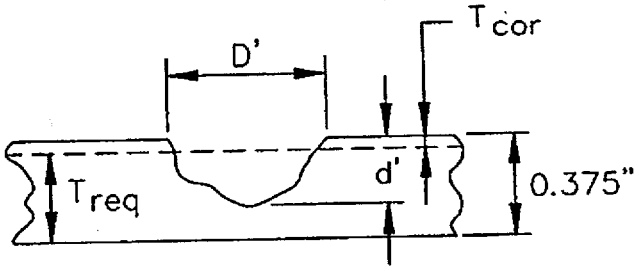

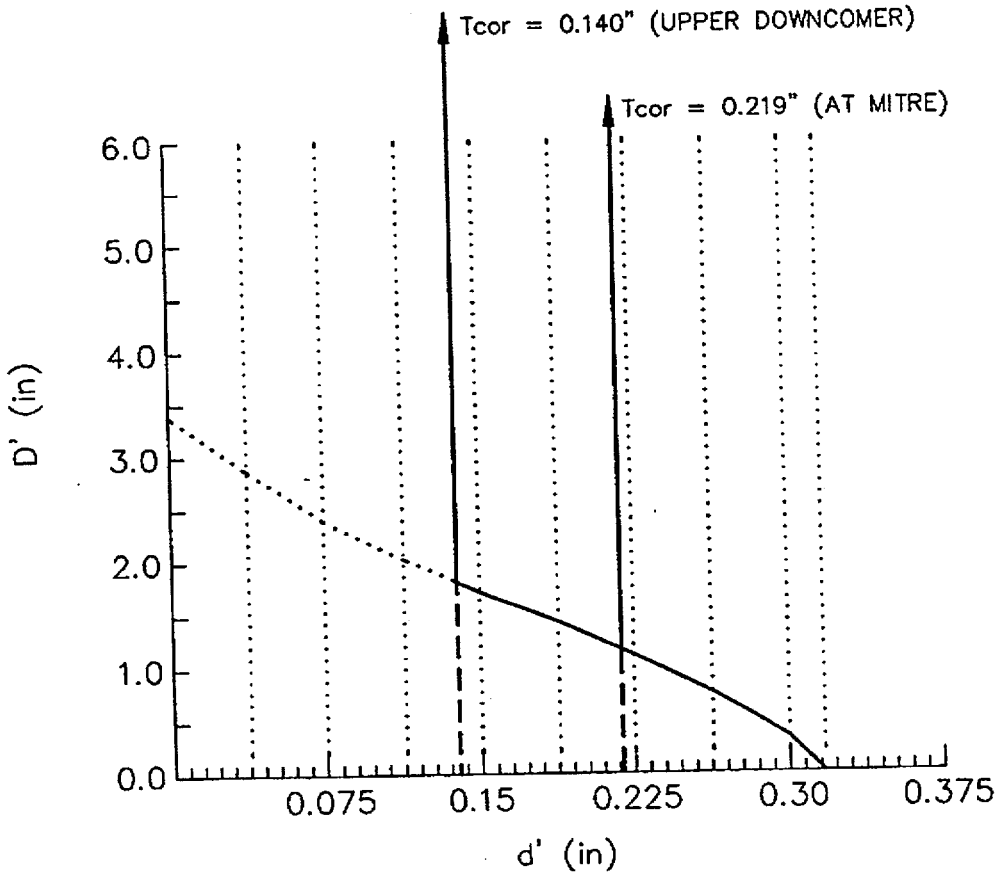

FIGURE 18

VENT SYSTEM VENT PIPE/SRV LINES A THRU D
VERMONT YANKEE NUCLEAR STATION

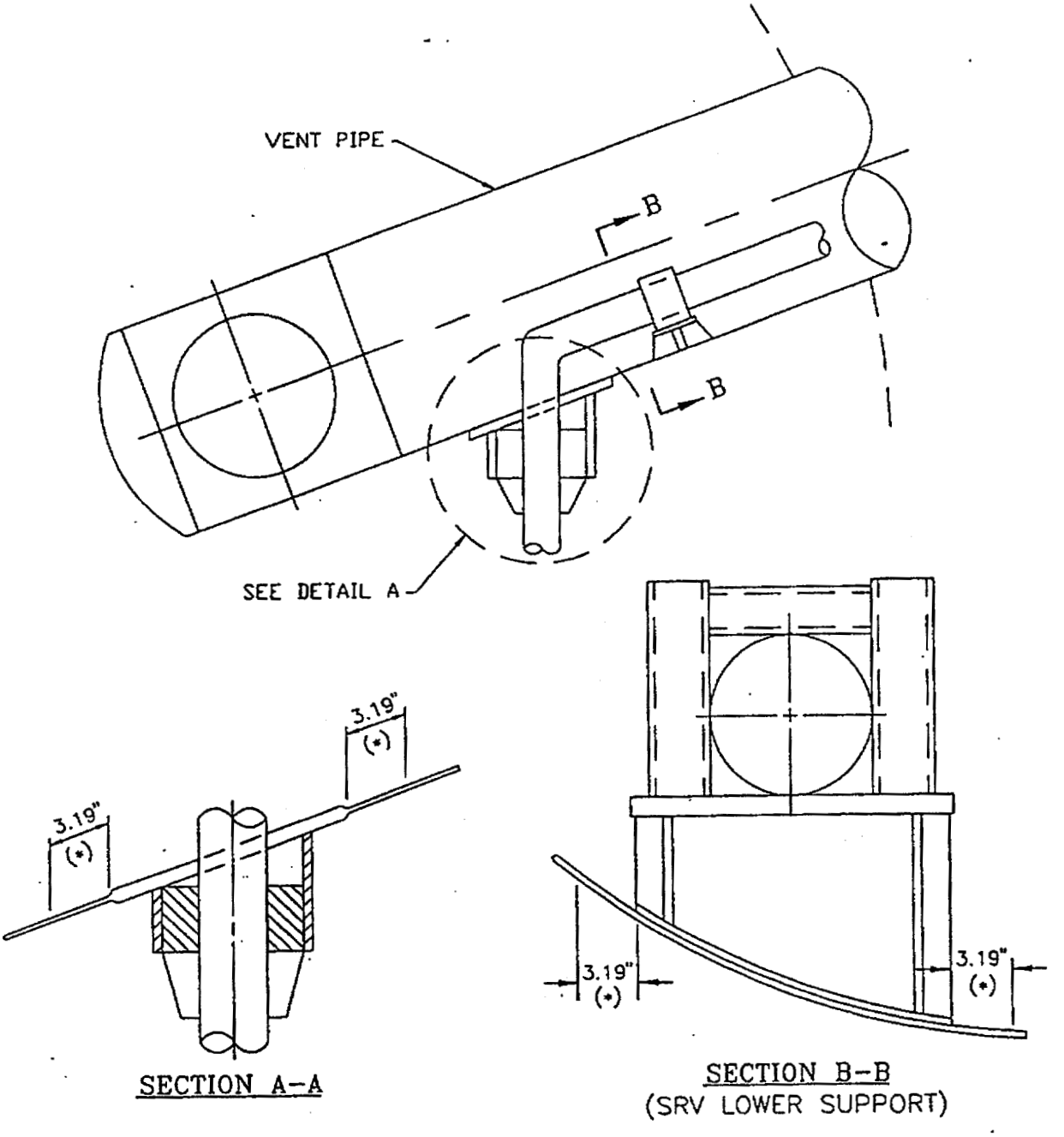

NOTE:
1. (*) LOCAL REGION
($1.0\sqrt{RT}$ = 3.19")

FIGURE 19

VYC-1032 ATTACHMENT A
P4 45/75

LOCAL SHELL REGIONS
VENT PIPE/SRV LINES A THRU D PENETRATION
VERMONT YANKEE NUCLEAR STATION

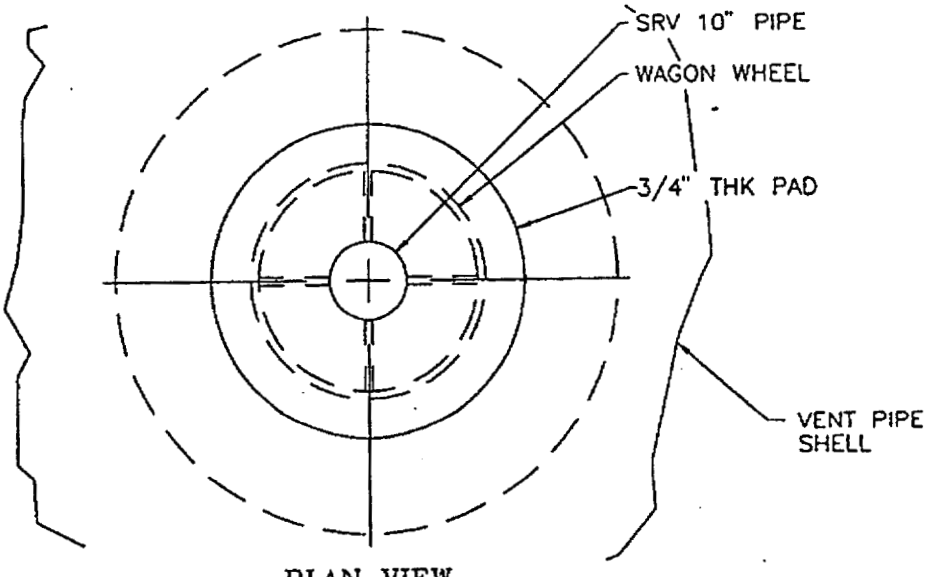

PLAN VIEW

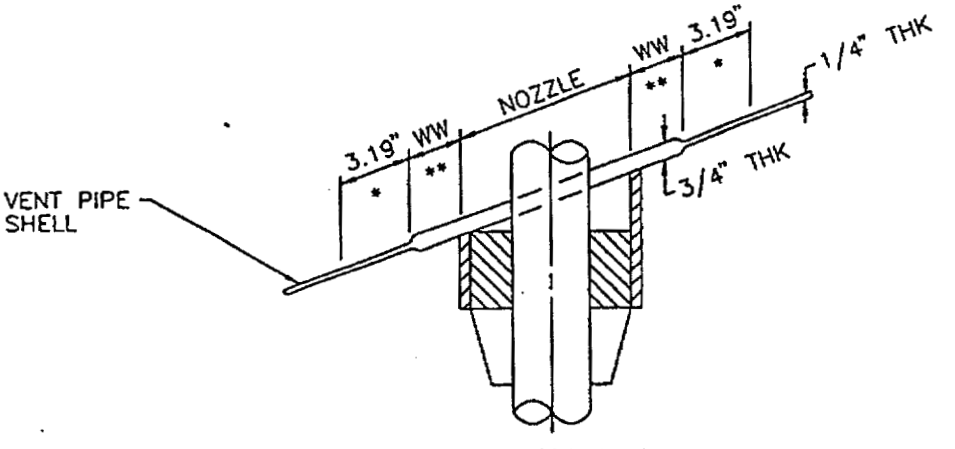

SECTION A–A

NOTE:

1. (*) VENT PIPE SHELL LOCAL REGION ($1.0\sqrt{RT}$ = 3.19")
2. (**) WAGON WHEEL LOCAL AREA

FIGURE 20

Pg 46/75
VYC-1032 ATTACHMENT A

PERMISSIBLE SIZE RANGE FOR INDICATION
VENT PIPE/SRV (A THRU D) AT NOZZLE INTERSECTION
VERMONT YANKEE NUCLEAR STATION

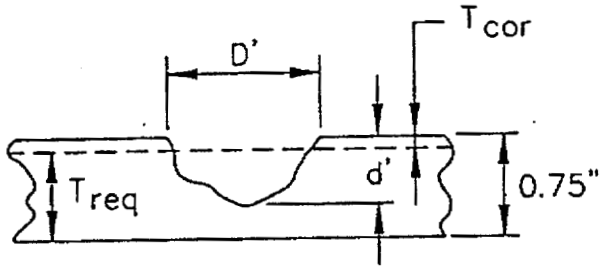

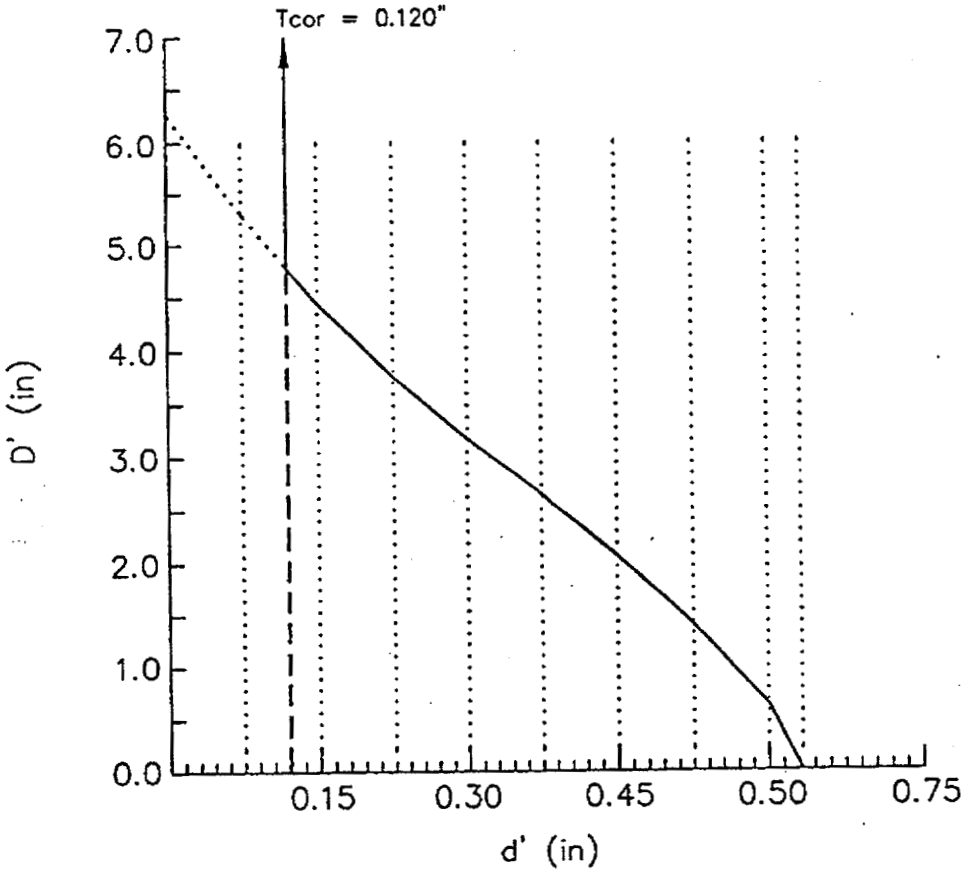

FIGURE 21

VYC-1032 ATTACHMENT A
Pg 47/75

PERMISSIBLE SIZE RANGE FOR INDICATION VENT PIPE/SRV (A THRU D) AT EDGE OF WAGON WHEEL VERMONT YANKEE NUCLEAR STATION

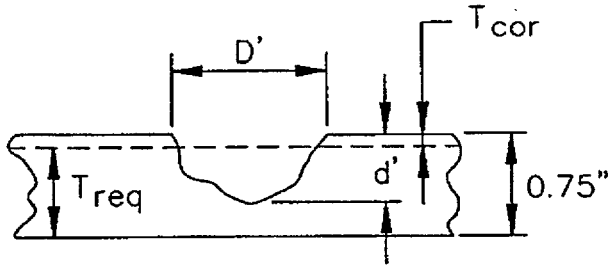

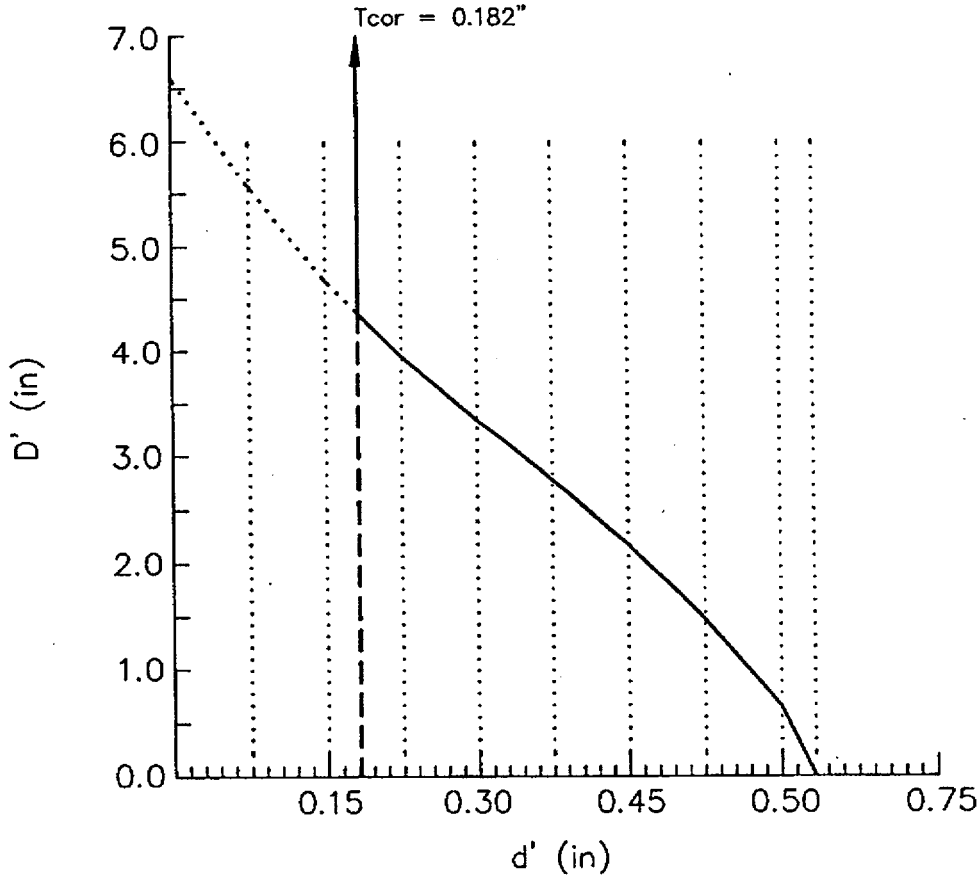

FIGURE 22

VYC-1032 ATTACHMENT A
Pg A8/15

PERMISSIBLE SIZE RANGE FOR INDICATION 1/4" THICK VENT PIPE/SRV (A THRU D) AT EDGE OF 3/4" PAD VERMONT YANKEE NUCLEAR STATION

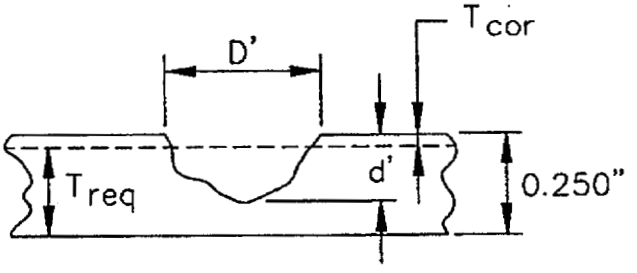

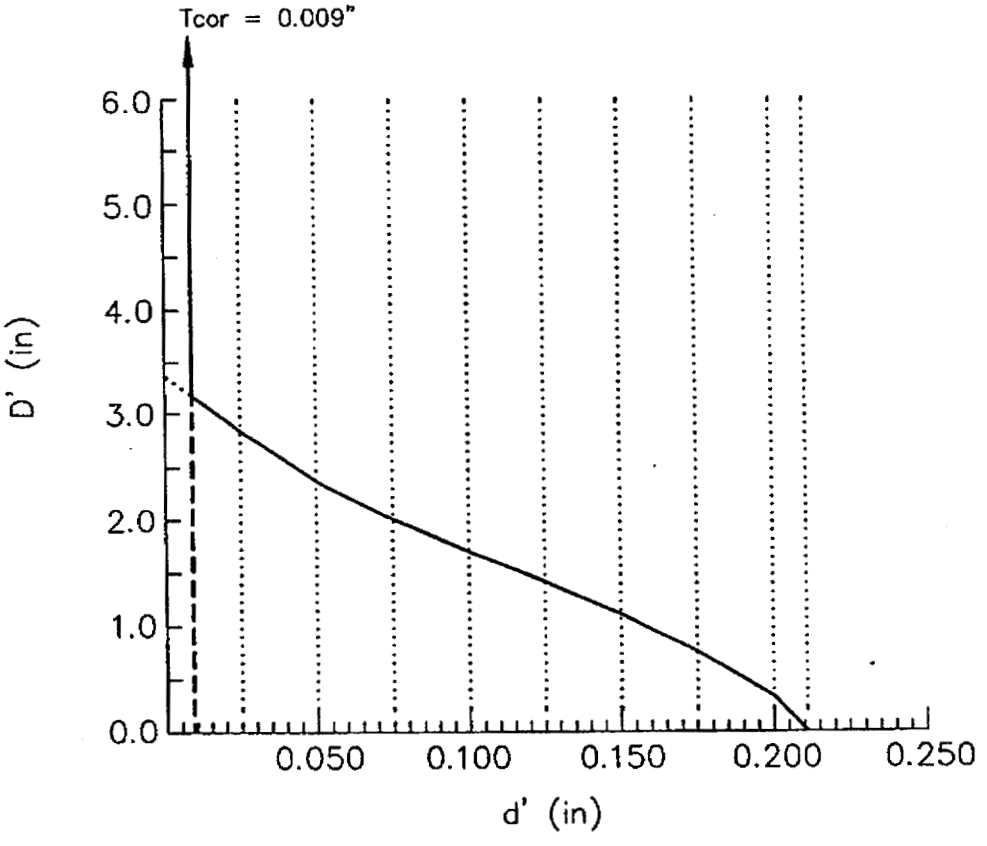

FIGURE 23

VYC-1032 ATTACHMENT A
P4A9/75

LOCAL SHELL REGIONS
VENT PIPE/SRV LINES (A THRU D) LOWER SUPPORT ATTACH'T
VERMONT YANKEE NUCLEAR STATION

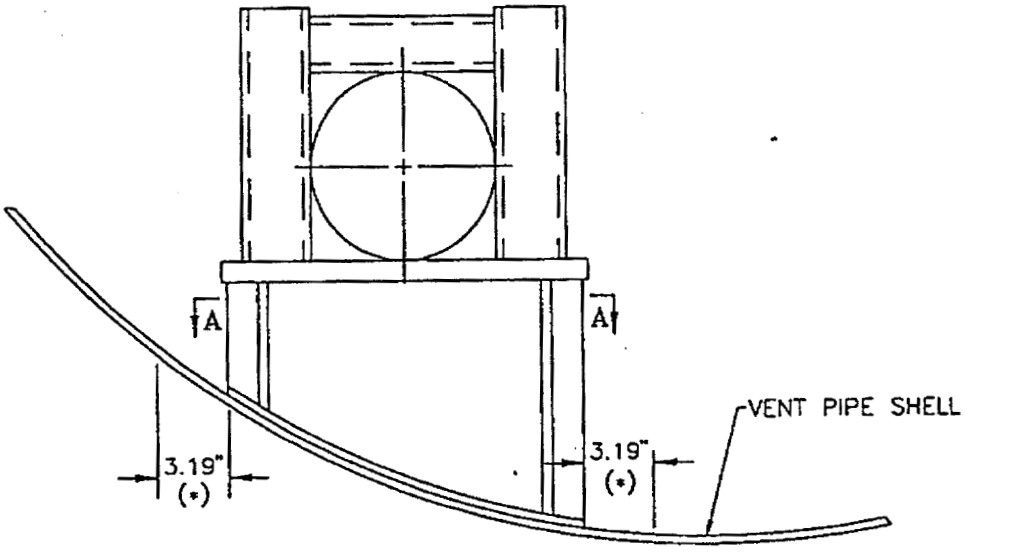

SRV LINE LOWER SUPPORT

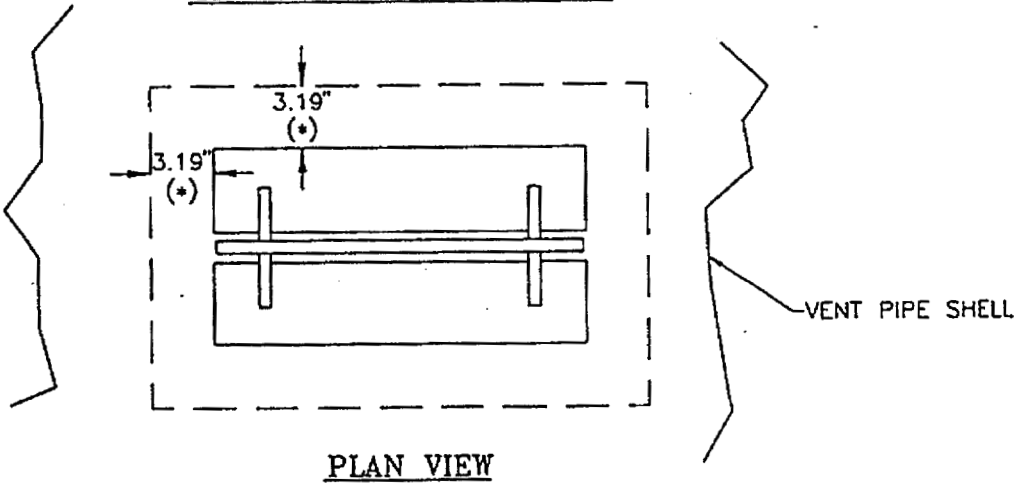

PLAN VIEW
SECTION A-A

NOTE:

1. (*) LOCAL REGION ($1.0\sqrt{RT}$ = 3.19")

FIGURE 24

VYC-1032 ATTACHMENT A
P450/75

PERMISSIBLE SIZE RANGE FOR INDICATION VENT PIPE/SRV (A THRU D) LOWER SUPPORT ATTACH'T VERMONT YANKEE NUCLEAR STATION

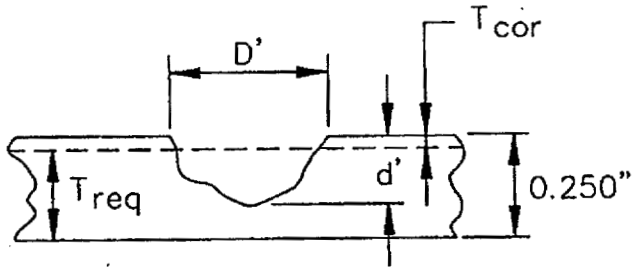

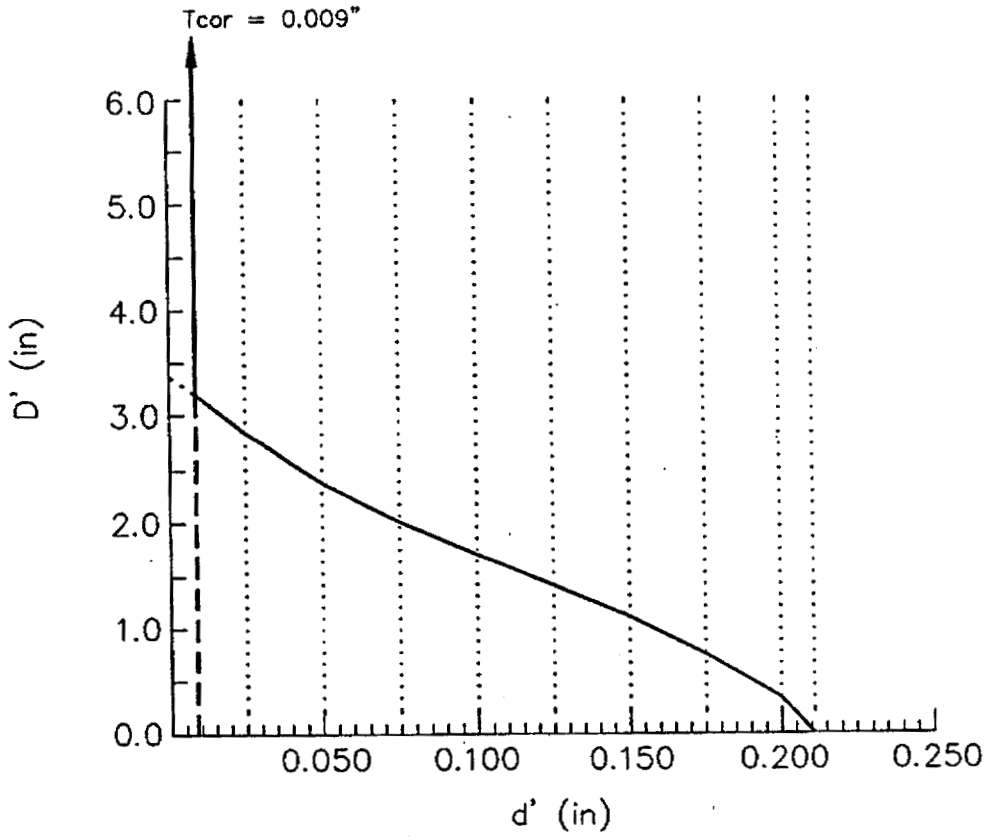

FIGURE 25

VYC-1032 ATTACHMENT A
P45/75

VENT PIPE/HEADER INTERSECTION
ABAQUS COMPUTER MODEL
VERMONT YANKEE NUCLEAR STATION

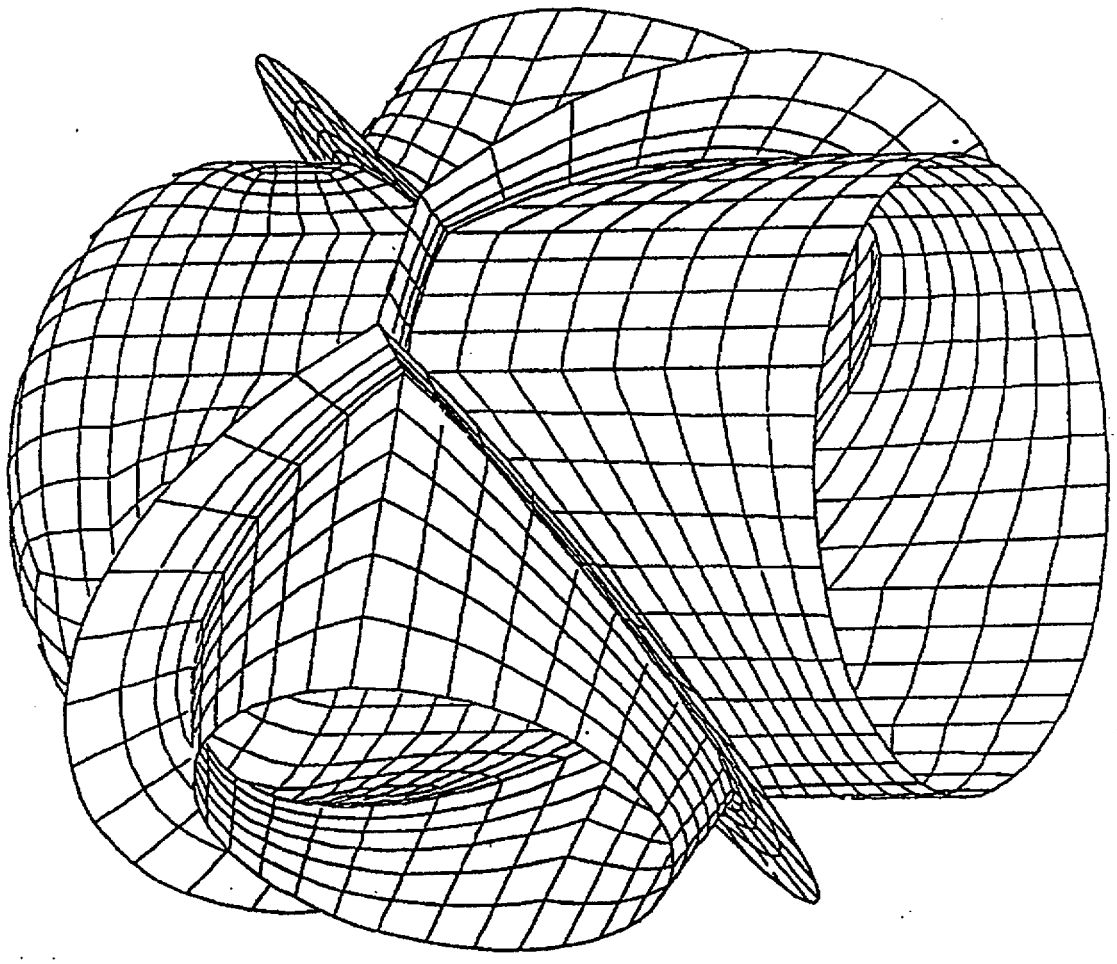

FIGURE 26

VYC-1032 ATTACHMENT A
P452/15

VENT PIPE/HEADER INTERSECTION
LOCAL THICKNESS REGIONS
VERMONT YANKEE NUCLEAR STATION

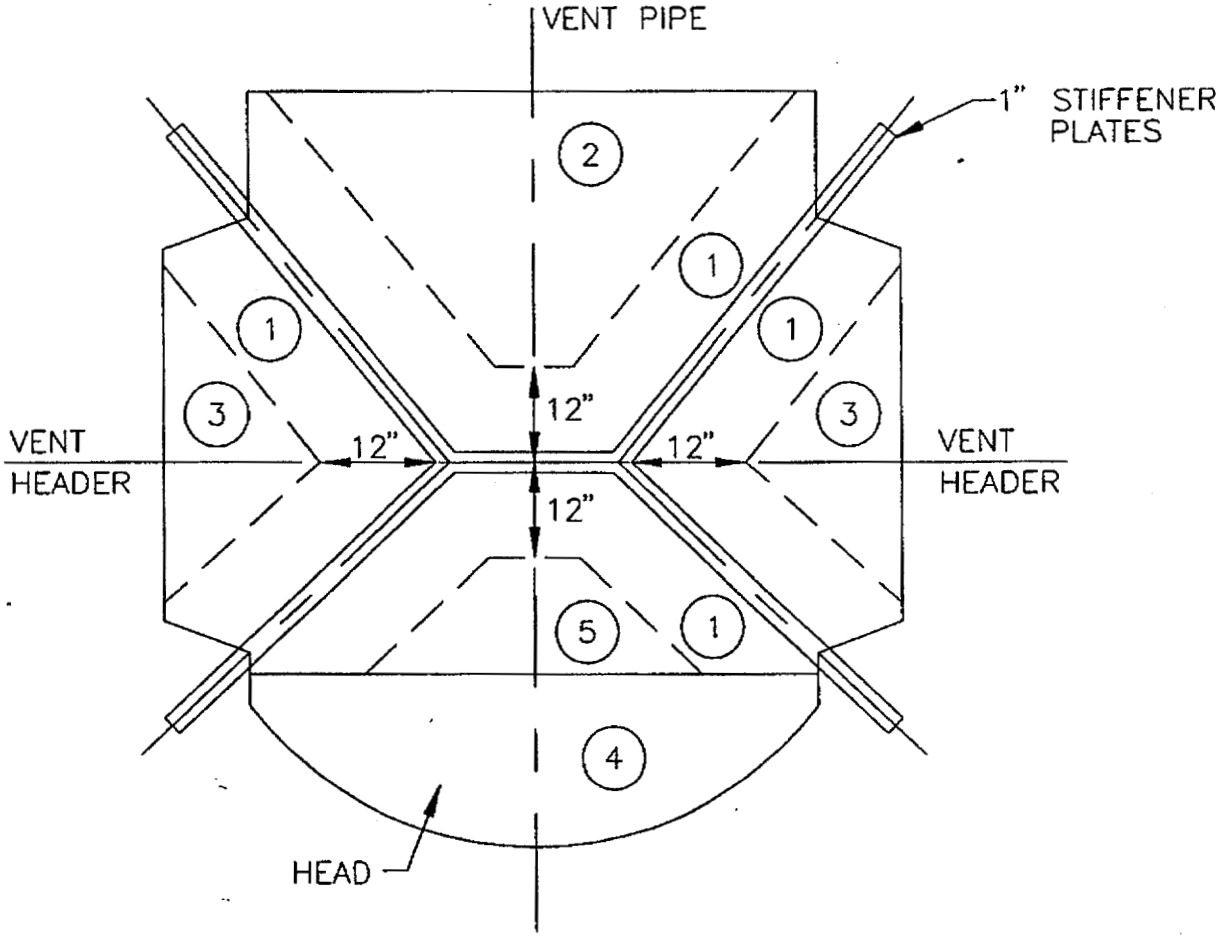

(1) ADJACENT TO STIFFENERS
(2) AT VENT PIPE BRANCH
(3) AT RING HEADER BRANCH
(4) AT VENT HEAD
(5) AT VENT HEAD BRANCH

FIGURE 27

VYC-1032 ATTACHMENT A
P453/75

PERMISSIBLE SIZE RANGE FOR INDICATION VENT PIPE/HEADER INTERSECTION ADJACENT TO STIFFENERS VERMONT YANKEE NUCLEAR STATION

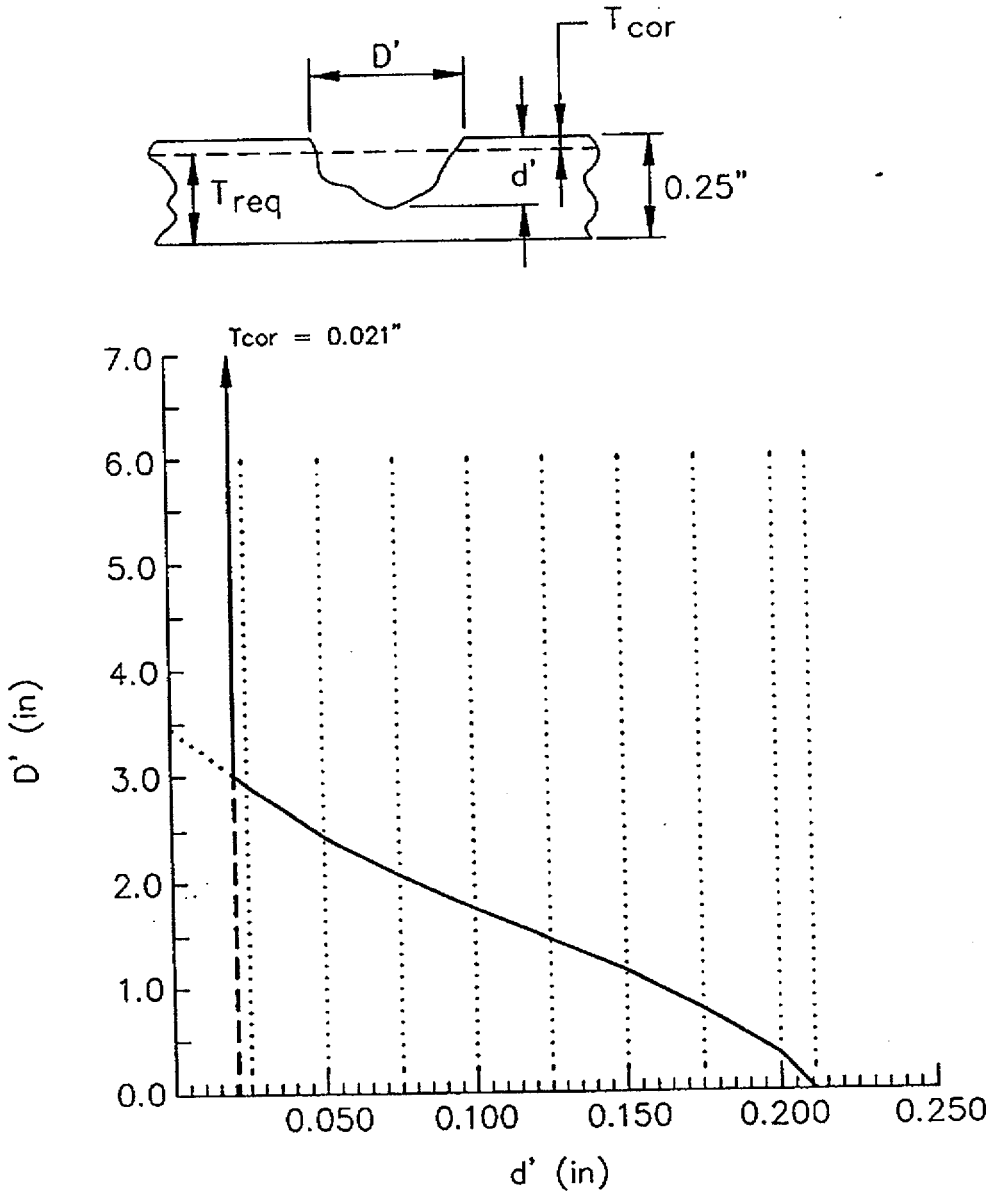

FIGURE 28

VYC-1032 ATTACHMENT A

P454/15

PERMISSIBLE SIZE RANGE FOR INDICATION VENT PIPE/HEADER INTERSECTION AT VENT PIPE BRANCH VERMONT YANKEE NUCLEAR STATION

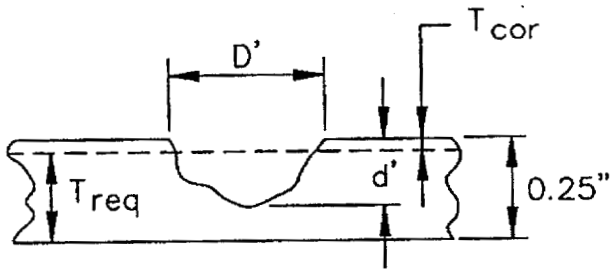

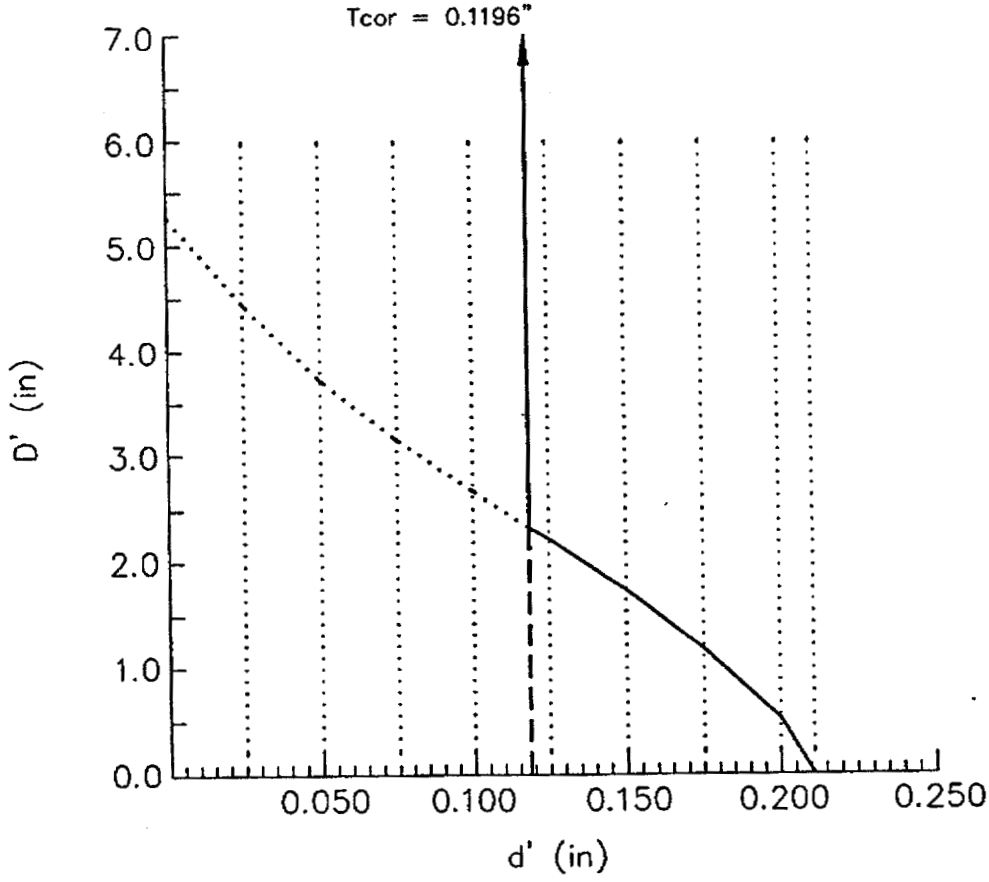

FIGURE 29

VYC-1032 ATTACHMENT A

P455/75

PERMISSIBLE SIZE RANGE FOR INDICATION VENT PIPE/HEADER INTERSECTION AT RING HEADER BRANCH VERMONT YANKEE NUCLEAR STATION

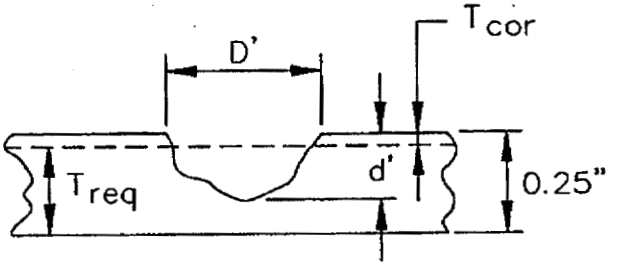

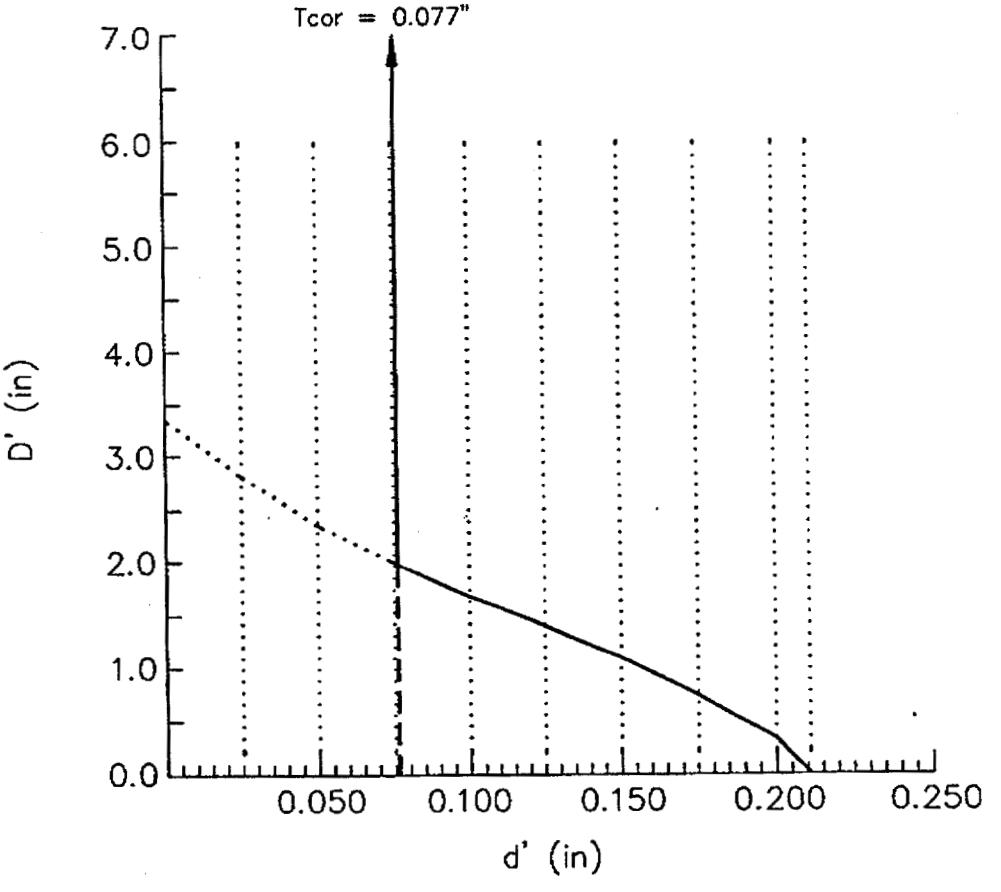

FIGURE 30

VYC-1032 ATTACHMENT A
P456/75

PERMISSIBLE SIZE RANGE FOR INDICATION VENT PIPE/HEADER INTERSECTION AT VENT HEAD VERMONT YANKEE NUCLEAR STATION

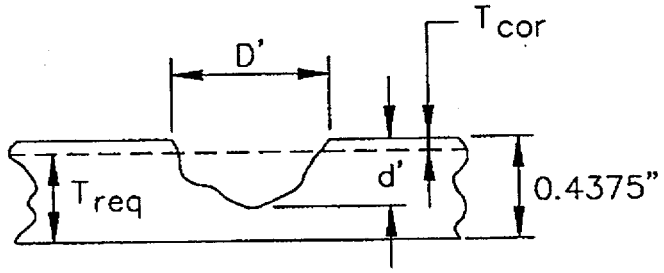

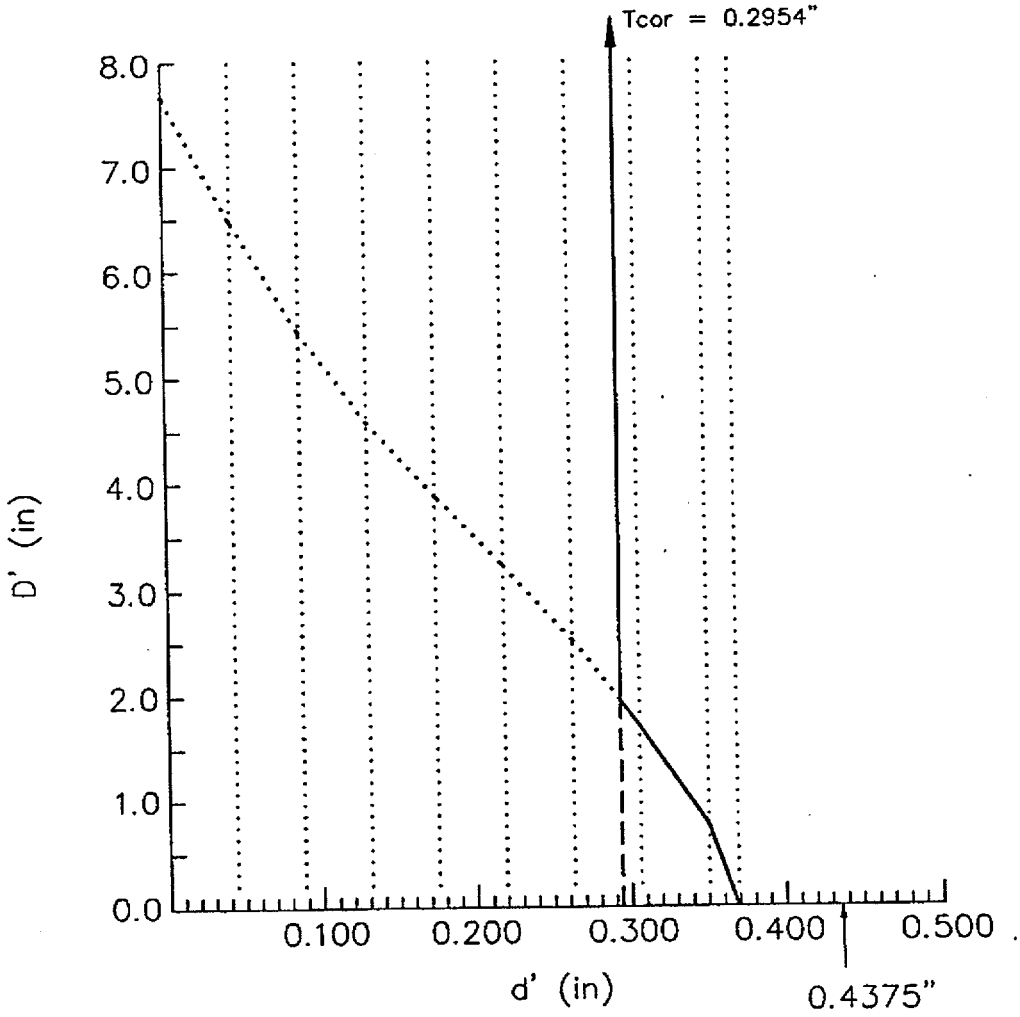

FIGURE 31

VYC-1032 ATTACHMENT A
P457/75

PERMISSIBLE SIZE RANGE FOR INDICATION VENT PIPE/HEADER INTERSECTION AT VENT HEAD BRANCH VERMONT YANKEE NUCLEAR STATION

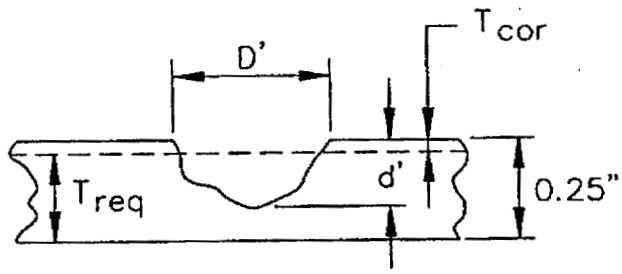

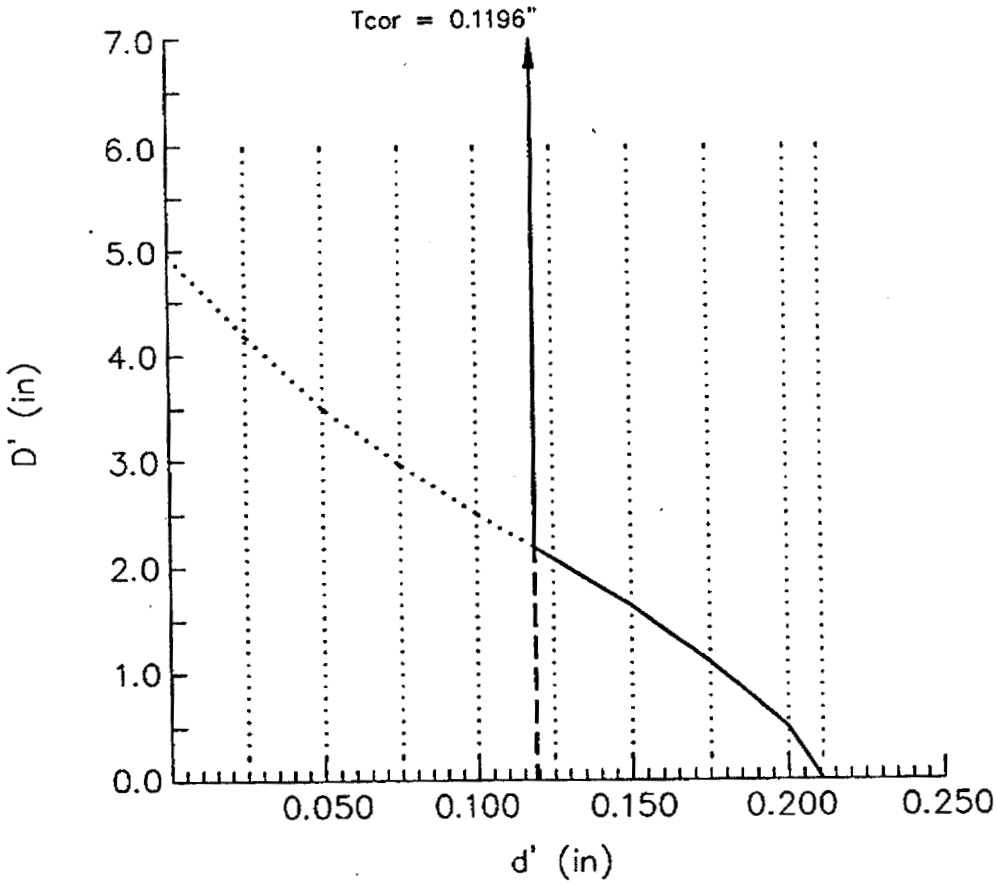

FIGURE 32

VYC-1032 ATTACHMENT A
P458/75

APPENDIX A

QUALITY ASSURANCE INFORMATION

The completed "Verification and Document Release" form contained herein is indication of the compliance of this technical report with the Teledyne Engineering Services Quality Assurance Program (Reference 21).

VYC-1032 ATTACHMENT A
P4 59/75

TELEDYNE ENGINEERING SERVICES

VERIFICATION AND DOCUMENT RELEASE

PROJECT NO.	7426	DATE	11-22-91
DOCUMENT ID NO.	TR-7426	REV. NO.	1
TYPE OF DOCUMENT	Technical Report	NUMBERS OF PAGES	76

TITLE

Mark I Torus Shell and Vent System Thickness Requirements

Vermont Yankee Nuclear Station

REV DESCRIPTION

Editorial changes per ECO No. 8918

THE FOLLOWING COMPUTER RUNS APPLY TO THIS DOCUMENT:

	RUN ID	DATE TIME	PROGRAM NAME/VERSION	SOFTWARE ERROR CHECK
1.	N/A			
2.				
3.				
4.				
5.				
6.				

If more space is required, attach additional pages.

ORIGINATOR [signature] DATE 11-21-91

CHECKER [signature] DATE 11-21-91

THIS DOCUMENT HAS BEEN VERIFIED AND IS IN COMPLIANCE WITH THE REQUIREMENTS OF THE TES QUALITY ASSURANCE PROGRAM.

VERIFIER [signature] DATE 11/22/91

APPROVED FOR RELEASE

PROJECT MANAGER [signature] DATE 11-22-91

QAE [signature] DATE 11-22-91

Technical Report
TR-7426

TELEDYNE
ENGINEERING SERVICES

VYC-1032 ATTACHMENT A
P460/75

APPENDIX B

SAMPLE TORUS SHELL CALCULATIONS FOR POSTULATED INDICATIONS

TELEDYNE ENGINEERING SERVICES

VYC-1032 ATTACHMENT A
P461/15

VERMONT YANKEE TORUS SHELL

TORUS SHELL INDICATION SAMPLE CALCULATION #1

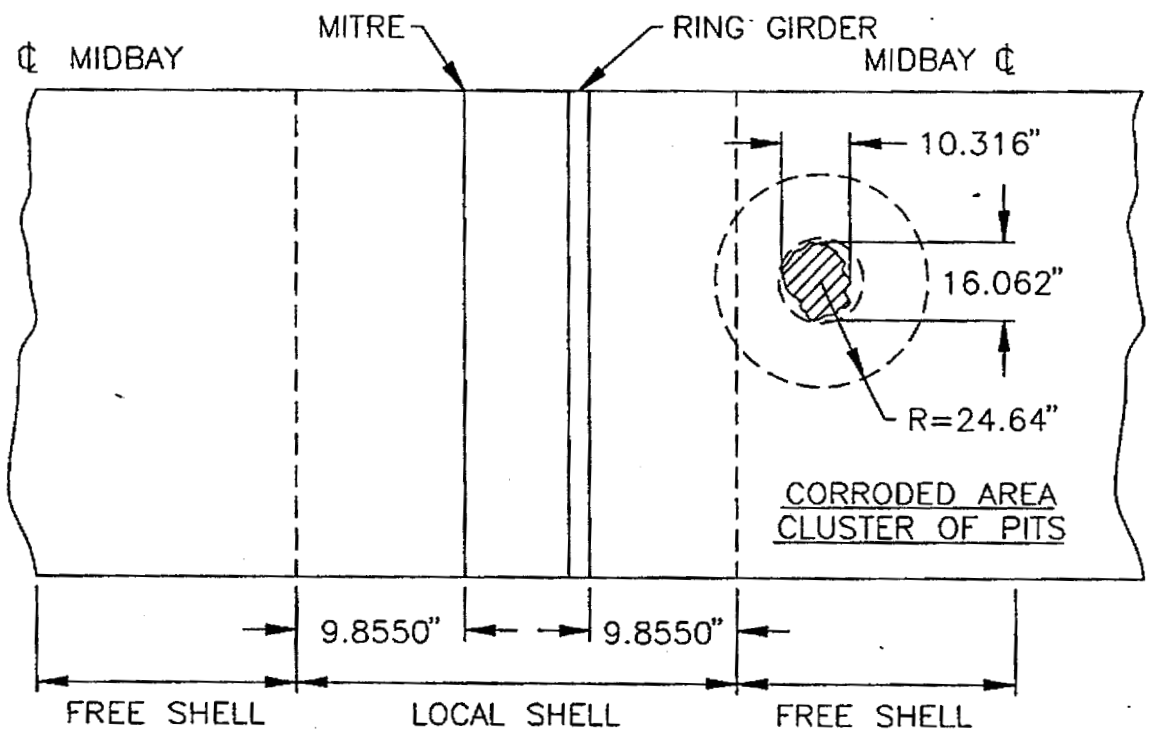

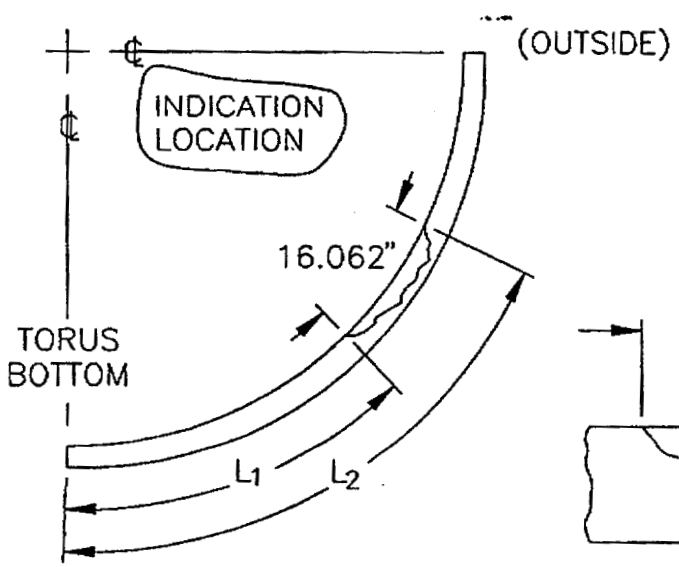

$L_1 = 71.258"$

$L_2 = 87.320"$

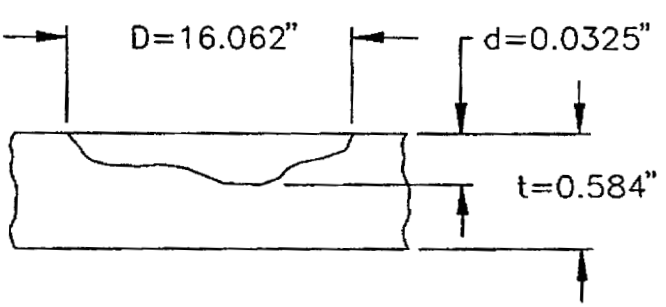

VYC-1032 ATTACHMENT A
P462/75

VERMONT YANKEE TORUS SHELL
TORUS SHELL INDICATION SAMPLE CALCULATION #1

STEP 1 Circumscribed diameter of indication area
D = 16.062"

STEP 2 Maximum depth of indication d = 0.0325"

STEP 3 Confirm that no additional indications are found within a 24.64" radius. / confirmed.

STEP 4 If Step 3 is violated, re-circumscribe the area and re-determine "D" and "d"

STEP 5 Determine arc region(s) from appropriate Figure 6 or 7.

/ Free shell region, Figure 6
____ Local shell region, Figure 7

L_1 = 71.258" Lies in Arc Region S 4
L_2 = 87.320" Lies in Arc Region S 4

S 4 Permissible Corroded Thickness, t_{cor} = 0.232"
S 4 Permissible Corroded Thickness, t_{cor} = 0.232"

STEP 6 Check if measured indication depth is less than the permissible corroded thickness (t_{cor}).

Permissible Corroded Thickness = t_{cor} = 0.232"
Indication Depth = d = 0.0325"

/, $d \leq t_{cor}$, then indication is acceptable, stop, skip remaining steps.

____, $d > t_{cor}$, then continue.

VYC-1032 ATTACHMENT A
P463/15

VERMONT YANKEE TORUS SHELL
TORUS SHELL INDICATION SAMPLE CALCULATION #1

STEP 7 Determine circumscribed diameter multiplier.
(F) From the table of Figure 8 or 9.

_____ Free Shell Region, Figure 8
_____ Ring Girder (Local) Shell Region, Figure 9

S___, Factor "F" = _____
S___, Factor "F" = _____

Largest multiplier factor "F" = _____

STEP 8 Determine equivalent diameter (D′) which circumscribes the indications.

D′ = D x F
D′ = _____ x _____ = _____

STEP 9 Using D′ and appropriate Figure 8 or 9, determine the allowable indication depth (d′).

_____ Free Shell, Figure 8
_____ Local Shell, Figure 9

Allowable Depth d′ = _____

* Adjust allowable depth (d'_{adj}) to account for reduced wall thickness measured.

Original Wall thickness, T_0 = 0.584"
Measured Wall Thickness, t = _____

Adjusted d′ = d′ - (T_0 - t) = _____
Indication Depth, d = _____

_____, d ≤ Adjusted d′, Indication is Acceptable.
_____, d > Adjusted d′, Weld Repair Required.

TELEDYNE
ENGINEERING SERVICES

VYC-1032 ATTACHMENT A
P464/75

VERMONT YANKEE TORUS SHELL
TORUS SHELL INDICATION SAMPLE CALCULATION #2

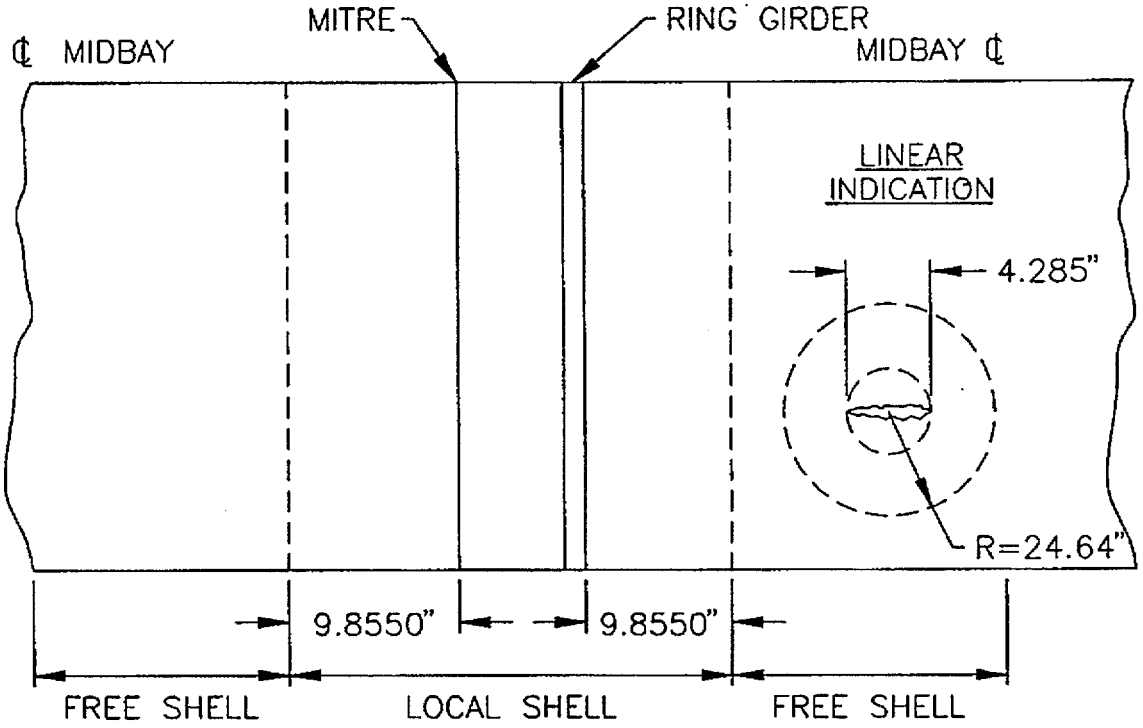

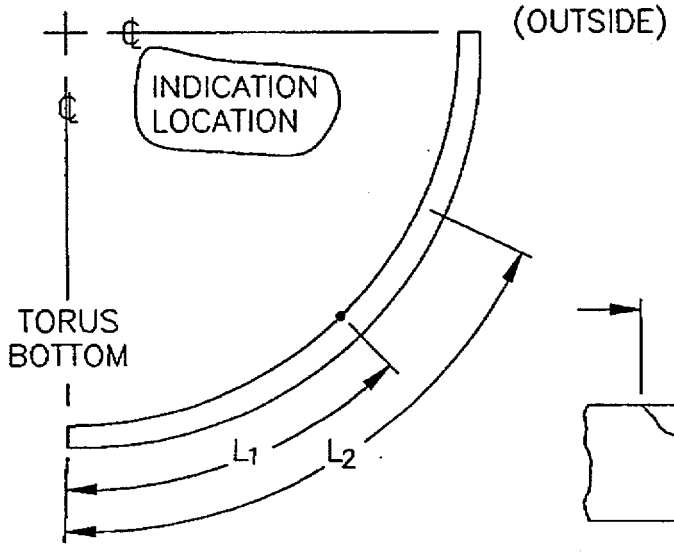

$L_1 = 133.122"$

$L_2 = N/A$

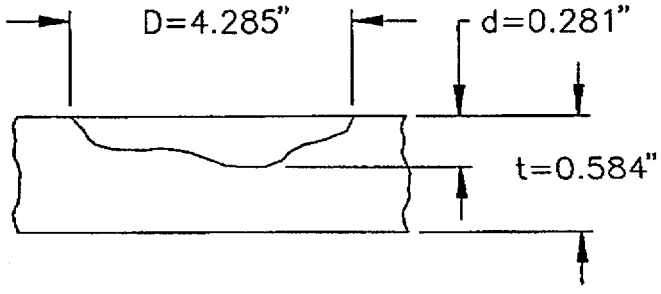

VYC-1032 ATTACHMENT A
P465/75

VERMONT YANKEE TORUS SHELL
TORUS SHELL INDICATION SAMPLE CALCULATION #2

STEP 1 Circumscribed diameter of indication area
D = 4.285"

STEP 2 Maximum depth of indication d = 0.281"

STEP 3 Confirm that no additional indications are found within a 24.64" radius. / confirmed.

STEP 4 If Step 3 is violated, re-circumscribe the area and re-determine "D" and "d"

STEP 5 Determine arc region(s) from appropriate Figure 6 or 7.

/ Free shell region, Figure 6
____ Local shell region, Figure 7

L_1 = 133.122" Lies in Arc Region S 3
L_2 = N/A Lies in Arc Region S___

S 3 Permissible Corroded Thickness, t_{cor} = 0.279"/0.315"
S___ Permissible Corroded Thickness, t_{cor} = _____

STEP 6 Check if measured indication depth is less than the permissible corroded thickness (t_{cor}).

$$\text{Interpolated } t_{cor} = .279" + (.315-.279)\frac{(133.122"-115.89")}{(173.84"-115.89")} = .290"$$

Permissible Corroded Thickness = t_{cor} = 0.290"
Indication Depth = d = 0.281"

/, $d \leq t_{cor}$, then indication is acceptable, stop, skip remaining steps.

____, $d > t_{cor}$, then continue.

VYC-1032 ATTACHMENT A
PG 66/75

VERMONT YANKEE TORUS SHELL
TORUS SHELL INDICATION SAMPLE CALCULATION #2

STEP 7 Determine circumscribed diameter multiplier.
(F) From the table of Figure 8 or 9.

_____ Free Shell Region, Figure 8
_____ Ring Girder (Local) Shell Region, Figure 9

S___, Factor "F" = _____
S___, Factor "F" = _____

Largest multiplier factor "F" = _____

STEP 8 Determine equivalent diameter (D′) which circumscribes the indications.

D′ = D x F
D′ = _____ x _____ = _____

STEP 9 Using D′ and appropriate Figure 8 or 9, determine the allowable indication depth (d′).

_____ Free Shell, Figure 8
_____ Local Shell, Figure 9

Allowable Depth d′ = _____

* Adjust allowable depth (d'_{adj}) to account for reduced wall thickness measured.

Original Wall thickness, T_0 = 0.584"
Measured Wall Thickness, t = _____

Adjusted d′ = d′ - (T_0 - t) = _____
Indication Depth, d = _____

_____, d ≤ Adjusted d′, Indication is Acceptable.
_____, d > Adjusted d′, Weld Repair Required.

TELEDYNE
ENGINEERING SERVICES

VYC-1032 ATTACHMENT A
P467/75

VERMONT YANKEE TORUS SHELL
TORUS SHELL INDICATION SAMPLE CALCULATION #3

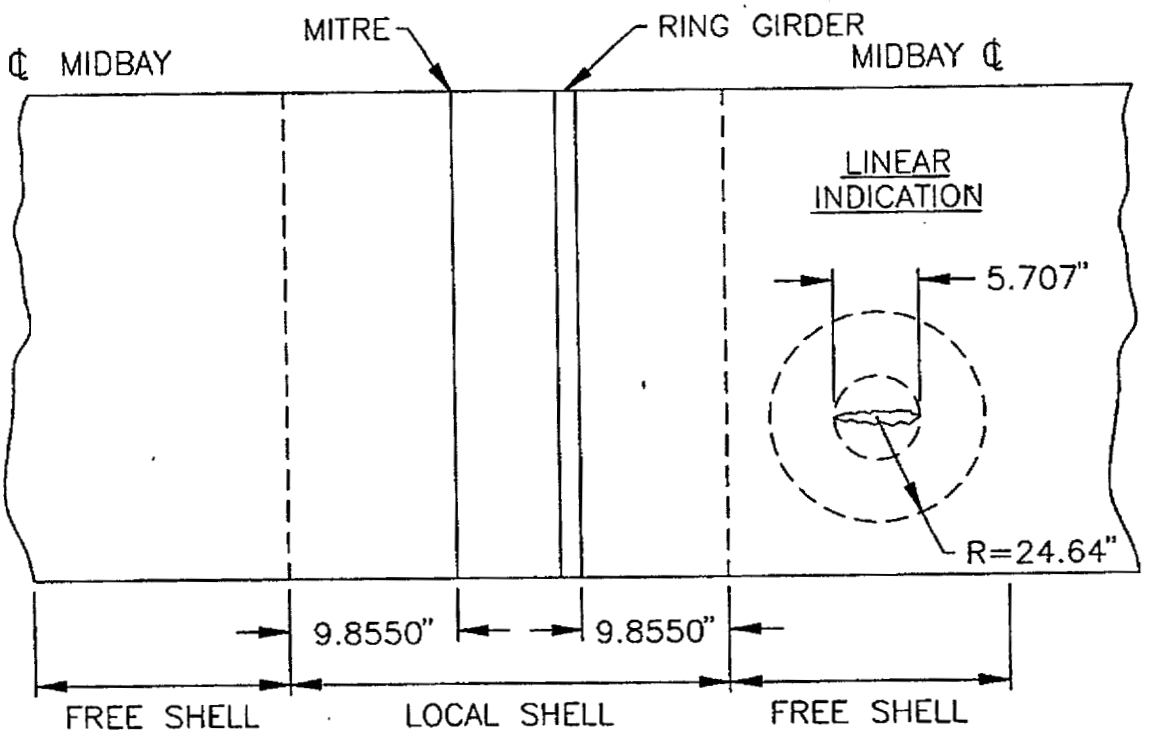

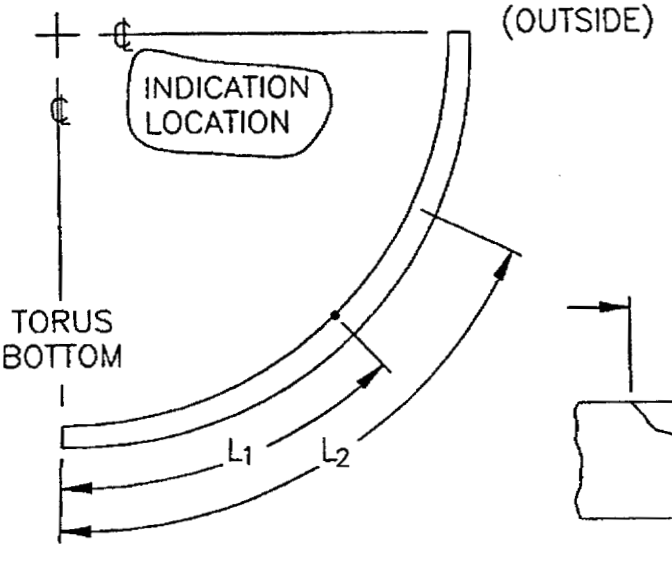

$L_1 = 55.125"$

$L_2 = N/A$

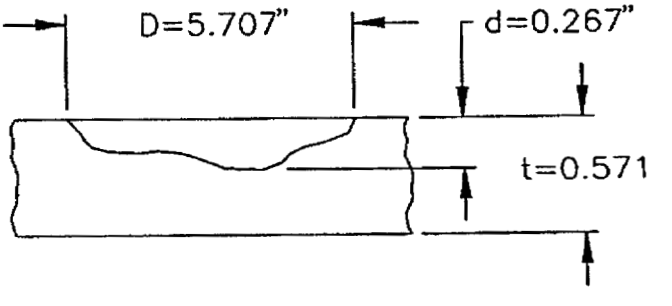

VYC-1032 ATTACHMENT A
Pg 68/75

VERMONT YANKEE TORUS SHELL
TORUS SHELL INDICATION SAMPLE CALCULATION #3

STEP 1 Circumscribed diameter of indication area
D = 5.707"

STEP 2 Maximum depth of indication d = 0.267"

STEP 3 Confirm that no additional indications are found within a 24.64" radius. / confirmed.

STEP 4 If Step 3 is violated, re-circumscribe the area and re-determine "D" and "d"

STEP 5 Determine arc region(s) from appropriate Figure 6 or 7.

/ Free shell region, Figure 6
____ Local shell region, Figure 7

L_1 = 55.125" Lies in Arc Region S 5
L_2 = N/A Lies in Arc Region S___

S 5 Permissible Corroded Thickness, t_{cor} = 0.225"/0.232"
S___ Permissible Corroded Thickness, t_{cor} = _____

STEP 6 Check if measured indication depth is less than the permissible corroded thickness (t_{cor}).

Permissible Corroded Thickness = t_{cor} = 0.225"/0.232"
Indication Depth = d = 0.267"

_____, $d \leq t_{cor}$, then indication is acceptable, stop, skip remaining steps.

/, $d > t_{cor}$, then continue.

VYC-1032 ATTACHMENT A
P469/75

VERMONT YANKEE TORUS SHELL
TORUS SHELL INDICATION SAMPLE CALCULATION #3

STEP 7 Determine circumscribed diameter multiplier.
(F) From the table of Figure 8 or 9.

/ Free Shell Region, Figure 8
____ Ring Girder (Local) Shell Region, Figure 9

S 5 , Factor "F" = 0.957
S___, Factor "F" = _____

Largest multiplier factor "F" = 0.957

STEP 8 Determine equivalent diameter (D′) which circumscribes the indications.

D′ = D x F
D′ = 5.707" x 0.957 = 5.462"

STEP 9 Using D′ and appropriate Figure 8 or 9, determine the allowable indication depth (d′).

/ Free Shell, Figure 8
____ Local Shell, Figure 9

Allowable Depth d′ = 0.368"

* Adjust allowable depth (d'_{adj}) to account for reduced wall thickness measured.

Original Wall thickness, T_0 = 0.584"
Measured Wall Thickness, t = 0.571"

Adjusted d′ = d′ - (T_0 - t) = 0.355"
Indication Depth, d = 0.267"

/, d ≤ Adjusted d′, Indication is Acceptable.
____, d > Adjusted d′, Weld Repair Required.

TELEDYNE
ENGINEERING SERVICES

VYC-1032 ATTACHMENT A
Pg 70/75

VERMONT YANKEE TORUS SHELL

TORUS SHELL INDICATION SAMPLE CALCULATION #4

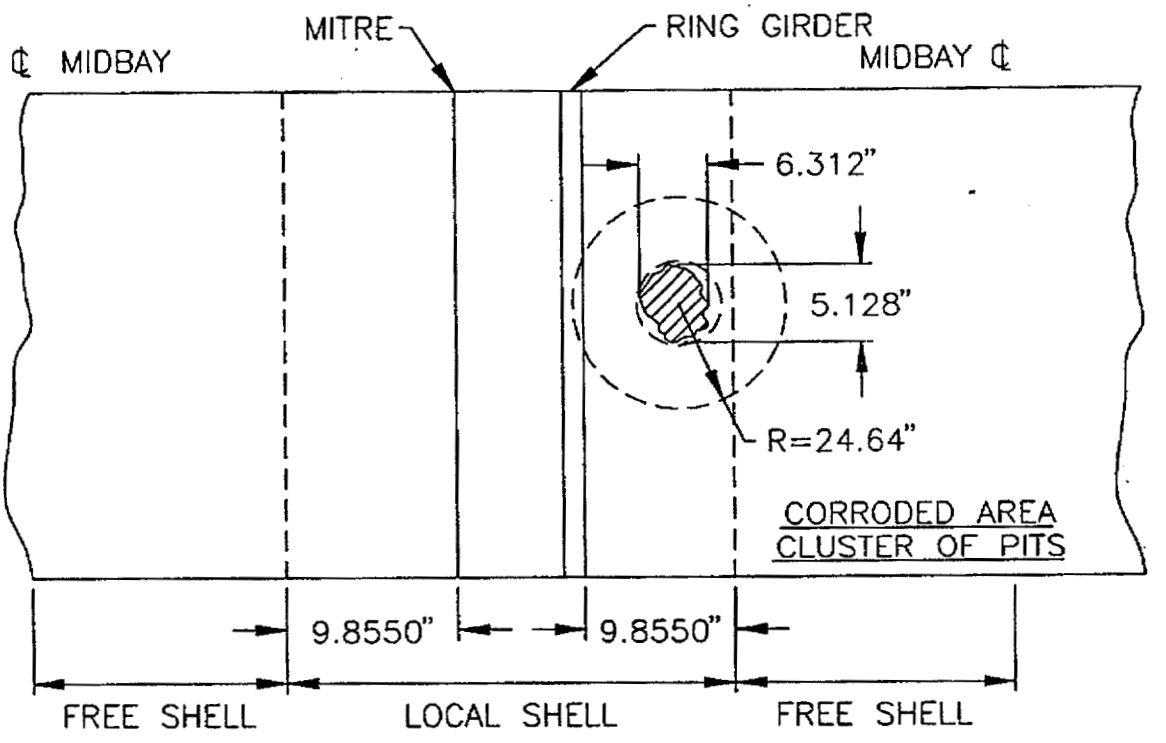

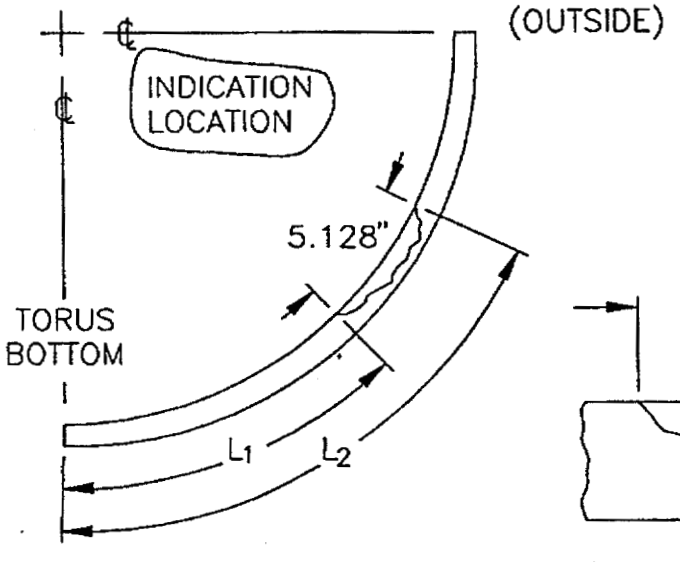

$L_1 = 38.125"$

$L_2 = 43.253"$

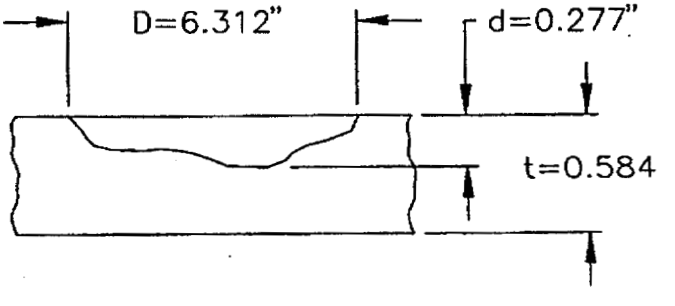

VYC-1032 ATTACHMENT A
P471/15

VERMONT YANKEE TORUS SHELL
TORUS SHELL INDICATION SAMPLE CALCULATION #4

STEP 1 Circumscribed diameter of indication area
D = 6.312"

STEP 2 Maximum depth of indication d = 0.277"

STEP 3 Confirm that no additional indications are found within a 24.64" radius. / confirmed.

STEP 4 If Step 3 is violated, re-circumscribe the area and re-determine "D" and "d"

STEP 5 Determine arc region(s) from appropriate Figure 6 or 7.

____ Free shell region, Figure 6
/ Local shell region, Figure 7

L_1 = 38.125" Lies in Arc Region S 5
L_2 = 43.253" Lies in Arc Region S 5

S 5 Permissible Corroded Thickness, t_{cor} = 0.450"/0.471"
S 5 Permissible Corroded Thickness, t_{cor} = 0.450"/0.471"

STEP 6 Check if measured indication depth is less than the permissible corroded thickness (t_{cor}).

Permissible Corroded Thickness = t_{cor} = 0.450"/0.471"
Indication Depth = d = 0.277"

/, $d \leq t_{cor}$, then indication is acceptable, stop, skip remaining steps.

____, $d > t_{cor}$, then continue.

VYC-1032 ATTACHMENT A
P472/75

VERMONT YANKEE TORUS SHELL
TORUS SHELL INDICATION SAMPLE CALCULATION #4

STEP 7 Determine circumscribed diameter multiplier.
(F) From the table of Figure 8 or 9.

_____ Free Shell Region, Figure 8
_____ Ring Girder (Local) Shell Region, Figure 9

S___, Factor "F" = _____
S___, Factor "F" = _____

Largest multiplier factor "F" = _____

STEP 8 Determine equivalent diameter (D′) which circumscribes the indications.

D′ = D x F
D′ = _____ x _____ = _____

STEP 9 Using D′ and appropriate Figure 8 or 9, determine the allowable indication depth (d′).

_____ Free Shell, Figure 8
_____ Local Shell, Figure 9

Allowable Depth d′ = _____

* Adjust allowable depth (d'_{adj}) to account for reduced wall thickness measured.

Original Wall thickness, T_0 = 0.584"
Measured Wall Thickness, t = _____

Adjusted d′ = d′ - (T_0 - t) = _____
Indication Depth, d = _____

_____, d ≤ Adjusted d′, Indication is Acceptable.
_____, d > Adjusted d′, Weld Repair Required.

VYC-1032 ATTACHMENT A
P473/75

VERMONT YANKEE TORUS SHELL
TORUS SHELL INDICATION SAMPLE CALCULATION #5

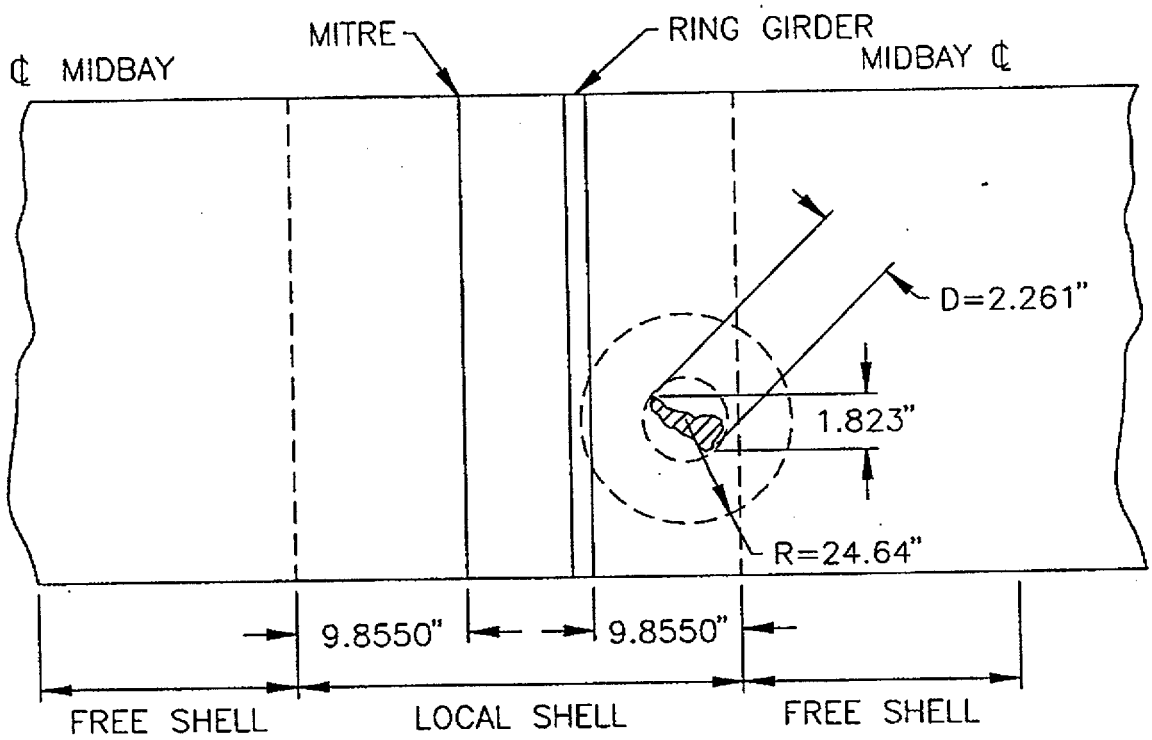

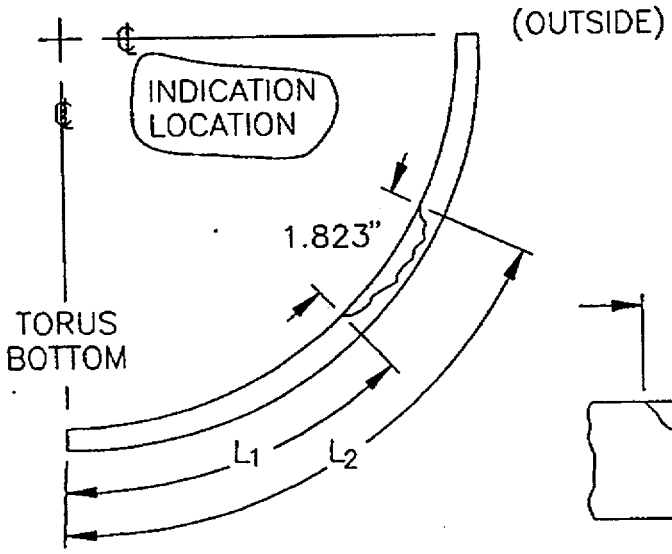

L_1=221.75"
L_2=223.573"

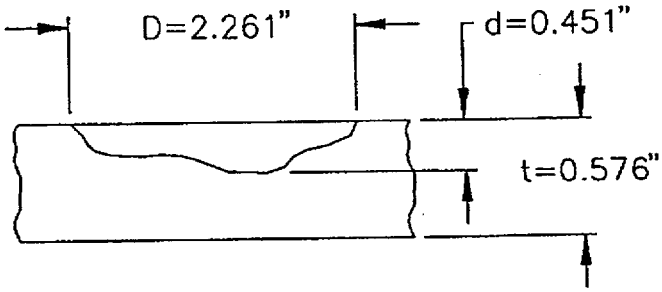

VYC-1032 ATTACHMENT A
P474/75

VERMONT YANKEE TORUS SHELL
TORUS SHELL INDICATION SAMPLE CALCULATION #5

STEP 1 Circumscribed diameter of indication area
D = 2.261"

STEP 2 Maximum depth of indication d = 0.451"

STEP 3 Confirm that no additional indications are found within a 24.64" radius. / confirmed.

STEP 4 If Step 3 is violated, re-circumscribe the area and re-determine "D" and "d"

STEP 5 Determine arc region(s) from appropriate Figure 6 or 7.

____ Free shell region, Figure 6
/ Local shell region, Figure 7

L_1 = 221.75" Lies in Arc Region S 2
L_2 = 223.573" Lies in Arc Region S 1

S 2 Permissible Corroded Thickness, t_{cor} = 0.460"/0.434"
S 1 Permissible Corroded Thickness, t_{cor} = 0.434"

STEP 6 Check if measured indication depth is less than the permissible corroded thickness (t_{cor}).

Permissible Corroded Thickness = t_{cor} = 0.434"
Indication Depth = d = 0.451"

_____, $d \leq t_{cor}$, then indication is acceptable, stop, skip remaining steps.

/, $d > t_{cor}$, then continue.

VYC-1032 ATTACHMENT A
P475/75

VERMONT YANKEE TORUS SHELL
TORUS SHELL INDICATION SAMPLE CALCULATION #5

STEP 7 Determine circumscribed diameter multiplier.
(F) From the table of Figure 8 or 9.

____ Free Shell Region, Figure 8
__✓__ Ring Girder (Local) Shell Region, Figure 9

S 2 , Factor "F" = 0.830
S 1 , Factor "F" = 0.913

Largest multiplier factor "F" = 0.913

STEP 8 Determine equivalent diameter (D′) which circumscribes the indications.

D′ = D x F
D′ = 2.261" x 0.913 = 2.064"

STEP 9 Using D′ and appropriate Figure 8 or 9, determine the allowable indication depth (d′).

____ Free Shell, Figure 8
__✓__ Local Shell, Figure 9

Allowable Depth d′ = 0.461"

* Adjust allowable depth (d'_{adj}) to account for reduced wall thickness measured.

Original Wall thickness, T_0 = 0.584"
Measured Wall Thickness, t = 0.576"

Adjusted d′ = d′ - (T_0 - t) = 0.453"
Indication Depth, d = 0.451"

__✓__, d ≤ Adjusted d′, Indication is Acceptable.
____, d > Adjusted d′, Weld Repair Required.

TELEDYNE ENGINEERING SERVICES

VYC-1032 ATTACHMENT A
Pg 3 of 75

TABLE OF CONTENTS

	PAGE
1.0 INTRODUCTION	1
2.0 TORUS SHELL ANALYSIS	2
2.1 Minimum Torus Shell Thickness Requirements	3
2.2 Permissible Local Reduction in Torus Shell Thickness for an Indication	5
3.0 VENT SYSTEM SHELL STRESS ANALYSIS	8
3.1 Minimum Vent System Shell Thickness Requirements	9
3.2 Permissible Local Reduction in Vent System Thickness for an Indication	10
4.0 REFERENCES	13

APPENDIX A - QUALITY ASSURANCE INFORMATION

APPENDIX B - SAMPLE TORUS SHELL CALCULATIONS FOR POSTULATED INDICATIONS

VYC-1032 REV. 1
ATTACHMENT B
TOTAL PAGES = 124
(INCLUDES COVER PG)

TELEDYNE ENGINEERING SERVICES
CONTROLLED
DOCUMENT
TES PROJ. NO. 7426
DATE 11/22/91

VYC-1032 ATTACHMENT B

TELEDYNE ENGINEERING SERVICES

VERIFICATION AND DOCUMENT RELEASE

PROJECT NO.	7426	DATE	11-22-91
DOCUMENT ID NO.	7426-1	REV. NO.	1
TYPE OF DOCUMENT	CALCULATION	NUMBERS OF PAGES	123

TITLE

Mark I Torus Shell and Vent System Thickness Requirements

Vermont Yankee Nuclear Station

REV DESCRIPTION

Editorial changes per ECO No. 8920

THE FOLLOWING COMPUTER RUNS APPLY TO THIS DOCUMENT:

	RUN ID	DATE TIME	PROGRAM NAME/VERSION	SOFTWARE ERROR CHECK
1.	N/A			
2.				
3.				
4.				
5.				
6.				

If more space is required, attach additional pages.

ORIGINATOR [signature] DATE 11-21-91

CHECKER [signature] DATE 11-21-91

THIS DOCUMENT HAS BEEN VERIFIED AND IS IN COMPLIANCE WITH THE REQUIREMENTS OF THE TES QUALITY ASSURANCE PROGRAM.

VERIFIER [signature] DATE 11/22/91

APPROVED FOR RELEASE

PROJECT MANAGER [signature] DATE 11-22-91

QAE [signature] DATE 11-22-91

TELEDYNE ENGINEERING SERVICES

BY R.H.B. DATE 11-21-91
CHKD. BY RKE DATE 11-21-91

VERMONT YANKEE
SHELL THICKNESS REQUIREMENTS
CALCULATION PACKAGE 7426-1

SHEET NO. 1 OF 46
PROJ. NO. 7426
Revision 1

LIST OF REVISIONS

Revision	Date	Description of Revision
0	12-28-90	Original Issue
1	11-22-91	Page 5, LIST OF FIGURES Figure 17, changed UPPER to LOWER in title. Figure 18, changed LOWER to UPPER in title. Figure 23, added 1/4" THICK before VENT PIPE/SRV in title. Page 7, 2nd paragraph, corrected name of plant to Vermont Yankee. Page 38, Figure 17, changed UPPER to LOWER in title. Page 39, Figure 18, changed LOWER to UPPER in title. Page 43, Figure 22, relocated T_{cor} line and arrow to align with the 0.182" thickness location. Page 44, Figure 23, added 1/4" THICK before VENT PIPE/SRV in title.

TABLE OF CONTENTS

	PAGE
1.0 INTRODUCTION	6
2.0 TORUS SHELL ANALYSIS	7
2.1 Minimum Torus Shell Thickness Requirements	8
2.2 Permissible Local Reduction in Torus Shell Thickness for an Indication	10
3.0 VENT SYSTEM SHELL STRESS ANALYSIS	12
3.1 Minimum Vent System Shell Thickness Requirements	14
3.2 Permissible Local Reduction in Vent System Thickness for an Indication	15
4.0 REFERENCES	18
APPENDIX A - TORUS AND VENT SYSTEM REQUIRED SHELL THICKNESS CALCULATIONS	A-1
A.1 TORUS SHELL THICKNESS CALCULATIONS	A-2
A.2 VENT SYSTEM THICKNESS CALCULATIONS	A-14
APPENDIX B - PERMISSIBLE INDICATION SIZE CALCULATIONS	B-1
B.1 TORUS SHELL RANGE OF INDICATION SIZES	B-13
B.2 VENT SYSTEM RANGE OF INDICATION SIZES	B-20
APPENDIX C - SAMPLE TORUS SHELL CALCULATIONS FOR POSTULATED INDICATIONS	C-1

VYC-1032 ATTACHMENT B

LIST OF TABLES

		PAGE
TABLE 1.	MINIMUM TORUS SHELL THICKNESS REQUIREMENTS, VERMONT YANKEE NUCLEAR STATION	20
TABLE 2.	MINIMUM VENT SYSTEM THICKNESS REQUIREMENTS, VERMONT YANKEE NUCLEAR STATION	21

VYC-1032 ATTACHMENT B

LIST OF FIGURES

		PAGE
FIGURE 1.	ROTATED AXIS VIEW - VERMONT YANKEE, 1/32 DETAILED SHELL MODEL	22
FIGURE 2.	MAXIMUM STRESS LOCATIONS - VERMONT YANKEE, 1/32 MODEL - UPPER HALF OF SHELL	23
FIGURE 3.	MAXIMUM STRESS LOCATIONS - VERMONT YANKEE, 1/32 MODEL - LOWER HALF OF SHELL	24
FIGURE 4.	LOCAL TORUS SHELL STRESS REGIONS, VERMONT YANKEE NUCLEAR STATION	25
FIGURE 5.	MARK I STRUCTURAL ACCEPTANCE CRITERIA EVENT COMBINATIONS	26
FIGURE 6.	PERMISSIBLE CORRODED THICKNESS FOR THE TORUS CROSS-SECTION AT MID-BAY (FREE SHELL REGION), VERMONT YANKEE NUCLEAR STATION	27
FIGURE 7.	PERMISSIBLE CORRODED THICKNESS FOR THE TORUS CROSS-SECTION ADJACENT TO RING GIRDER (LOCAL SHELL REGION), VERMONT YANKEE NUCLEAR STATION	28
FIGURE 8.	PERMISSIBLE SIZE RANGE FOR INDICATION, FREE-SHELL REGION OF THE TORUS, VERMONT YANKEE NUCLEAR STATION	29
FIGURE 9.	PERMISSIBLE SIZE RANGE FOR INDICATION, RING GIRDER REGION OF THE TORUS, VERMONT YANKEE NUCLEAR STATION	30
FIGURE 10.	VENT SYSTEM BEAM MODEL, VERMONT YANKEE NUCLEAR STATION	31
FIGURE 11.	VENT HEADER/DOWNCOMER INTERSECTION MODEL, VERMONT YANKEE NUCLEAR STATION	32
FIGURE 12.	VENT PIPE/SRV LINES A THRU D PENETRATION STARDYNE COMPUTER MODEL, VERMONT YANKEE NUCLEAR STATION	33
FIGURE 13.	FREE AND LOCAL SHELL REGIONS FOR THE VENT HEADER, VERMONT YANKEE NUCLEAR STATION	34
FIGURE 14.	PERMISSIBLE SIZE RANGE FOR INDICATION, VENT PIPE, VERMONT YANKEE NUCLEAR STATION	35
FIGURE 15.	PERMISSIBLE SIZE RANGE FOR INDICATION, VENT HEADER, VERMONT YANKEE NUCLEAR STATION	36

		PAGE
FIGURE 16.	FREE AND LOCAL SHELL REGIONS FOR THE DOWNCOMERS, VERMONT YANKEE NUCLEAR STATION	37
FIGURE 17.	PERMISSIBLE SIZE RANGE FOR INDICATION, LOWER DOWNCOMER, VERMONT YANKEE NUCLEAR STATION	38
FIGURE 18.	PERMISSIBLE SIZE RANGE FOR INDICATION, UPPER DOWNCOMER, VERMONT YANKEE NUCLEAR STATION	39
FIGURE 19.	VENT SYSTEM VENT PIPE/SRV LINES A THRU D VERMONT YANKEE NUCLEAR STATION	40
FIGURE 20.	LOCAL SHELL REGIONS, VENT PIPE/SRV LINES A THRU D PENETRATION, VERMONT YANKEE NUCLEAR STATION	41
FIGURE 21.	PERMISSIBLE SIZE RANGE FOR INDICATION, VENT PIPE/ SRV (A THRU D) AT NOZZLE INTERSECTION VERMONT YANKEE NUCLEAR STATION	42
FIGURE 22.	PERMISSIBLE SIZE RANGE FOR INDICATION, VENT PIPE/ SRV (A THRU D) AT EDGE OF WAGON WHEEL VERMONT YANKEE NUCLEAR STATION	43
FIGURE 23.	PERMISSIBLE SIZE RANGE FOR INDICATION, 1/4" THICK VENT PIPE/SRV (A THRU D) AT EDGE OF 3/4" PAD VERMONT YANKEE NUCLEAR STATION	44
FIGURE 24.	LOCAL SHELL REGIONS, VENT PIPE/SRV LINES A THRU D LOWER SUPPORT ATTACHMENT, VERMONT YANKEE NUCLEAR STATION	45
FIGURE 25.	PERMISSIBLE SIZE RANGE FOR INDICATION, VENT PIPE/ SRV (A THRU D) AT LOWER SUPPORT VERMONT YANKEE NUCLEAR STATION	46

1.0 INTRODUCTION

Teledyne Engineering Services (TES) has been requested by Yankee Atomic Electric Company (YAEC) (Reference 1) to review the Mark I Torus Containment Program analysis of the torus and vent system to determine the shell thickness requirements for these vessel components.

The torus shell analysis of record will be reviewed herein using available information to:

1. Map the profile of the required minimum shell thickness for the symmetric torus bays.

2. Determine the permissible local reduction in shell thickness at midbay bottom dead center, the location of least margin, for a range of postulated indications.

In addition, TES will review the existing vent system analysis to:

1. Determine the corrosion allowance used for the analysis, if any.

2. Review all critical vent system shell locations calculating the minimum required shell thickness based on the present Mark I event loading combinations.

3. Identify and report on analysis conservatisms which might significantly decrease the required minimum wall thickness with additional refinement, if any.

2.0 TORUS SHELL ANALYSIS

TES has determined that the Mark I Program analysis of record for the torus shell took advantage of the full as-built vessel thickness. In reviewing the documentation (References 2 and 3), it was determined that the full thickness was used to comply with the Code (Reference 4) requirements for the torus shell stress at the midbay (free-shell) locations for the specified event combinations (Reference 5). These event combinations include both the original design loads and Mark I Program loads per the structural acceptance criteria (Reference 6).

During the review of this documentation TES determined that the torus shell analysis conservatisms had been previously considered and eliminated as a practical consideration for demonstrating compliance with the Code requirements during the original evaluation. Some of the important refinements which eliminated the analysis conservatism and reduced the number of modifications at the Vermont Yankee include: △1

- Use of in-situ SRV testing to reduce the conservatism in the GE load definition.

- TES in-house development of the torus shell stress postprocessing program DISTRESS (Reference 7) to handle the many computer analyses for the various loading conditions, to combine all data on a component stress level, and to produce final results for the 27 Mark I event combinations.

- Redefinition of the condensation oscillation loading function in the time domain to account for load phasing.

- Development of an improved methodology to enforce compatibility between the torus shell and the attached piping systems.

Therefore, it is our opinion that additional refinement of the Mark I torus shell analysis would not be practical to increase the margin on torus shell thickness.

2.1 Minimum Torus Shell Thickness Requirements

TES has reviewed the torus shell analysis package (Reference 2) and associated computer output from our one-thirty-second STARDYNE (Reference 8) finite-element computer model (Figure 1) to obtain event combination stress output at specific locations from our DISTRESS torus shell stress postprocessor (Reference 7). Because of the large volume of data available for postprocessing during the Mark I Program, only those elements at critical locations as determined by preliminary scoping analyses had been postprocessed during the final analysis phase. These elements, which are located at midbay (free-shell) and adjacent to the ring girder (local shell), are shaded in Figures 2 and 3. It is our opinion that this information is adequate to determine the minimum thickness requirements since the major loads (i.e., pressure, DBA condensation oscillation, poolswell) are relatively constant along the longitudinal axis of the torus bay.

The minimum thickness requirements at the midbay (free-shell) location of the torus shell are governed by the primary membrane stress (P_M) obtained from the one-thirty-second STARDYNE model considering the various Mark I event combinations. For the torus shell adjacent to the ring girder (local shell), a gross structural discontinuity, the minimum thickness requirements are governed by the primary local stress (P_L). The primary local stress region extends for a distance of a 9.8550 inches or one-square-root-of-mean-radius-times-thickness ($1.0\sqrt{Rt}$) from the intersection of the ring girder longitudinally along the torus bay (Figure 4).

Code compliance for primary membrane and primary local stress intensity shall be determined based on comparison of the actual event stress intensity (i.e., from the finite-element analysis of the torus shell) to the Code allowable stress which is a function of the event service limit as defined by the structural acceptance criteria (Reference 6).

Stress Intensity	Service Limit Allowable A or B	Service Limit Allowable C
P_M	S_{MC}	Larger of 1.2 S_{MC} or 1.0 S_Y
P_L	1.5 S_{MC}	Larger of 1.8 S_{MC} or 1.5 S_Y

The Mark I program event combinations to be reviewed are those which were previously found to control the torus shell stress analysis as bounding cases (Reference 3). They are event combinations 2, 3, 14, 15, 16, 18, 19, 20, 21 and 25 (Figure 5). However, some of these event combinations can be eliminated from further consideration without increasing the conservatism as follows:

- Event combinations 2 and 3 are bounded by event combinations 14 and 15.

- The difference between event combinations, pairs 14 and 15, 18 and 19, 20 and 21, is OBE versus SSE seismic loading. The SSE load is marginally larger (i.e., much less than 20%) than the OBE load in all cases. For these pairs, the higher event numbers (i.e., the SSE event) are Level C service limit events with a minimum 20% increase in allowable stress. Therefore, the Level B lower event numbers 14, 18, and 20 will control the analyses.

Therefore, the remaining event combinations to be reviewed are 14, 16, 18, 20 and 25.

Calculation of the minimum thickness herein is based on the determination of an equivalent pressure (P_0) which will yield a hoop membrane stress equal to the event combination primary membrane or local stress intensity. Then, solving for the required minimum thickness based on compliance with the Code allowable stress intensity:

$$(P_0)R/t \leq S_{MC} \text{ for } P_M$$

or

$$(P_0)R/t \leq 1.5\ S_{MC} \text{ for } P_L$$

where P_0 - equivalent pressure (psi)
R - torus mean radius (166.292 inches)
t - required thickness (i.e., $\leq$ 0.584 inches)

Table 1 provides the minimum thickness requirements as calculated in Appendix A for the two torus shell locations adjacent to the ring girder (local shell region) and at midbay (free-shell region). Figures 6 and 7 represent this data plotted as the permissible corroded thickness on the torus cross sections. As previously suggested, the thickness requirements adjacent to the ring girder extend longitudinally 9.8550 inches along the torus shell. In addition, on the torus shell mitre side of the ring girder, the local region shall extend 9.8550 inches beyond the mitre away from the ring girder (Figure 4). The remainder of the torus shell is governed by the midbay thickness requirements.

2.2 Permissible Local Reduction in Torus Shell Thickness for an Indication

An indication, which may be found upon inspection of the torus shell (Figure 4), may be acceptable if it does not meet the screening criteria of 2.1, Table 1, for required shell thickness (Figures 6 and 7) provided that it meets the local stress criteria of the Code for the particular location of concern.

A generalized compatibility analysis to determine the effect of a cylindrical depression on a uniform stress distribution was performed (Appendix B) for a large circular plate of constant thickness.

Figure 6 for the free shell and Figure 7 for the local shell regions of the torus are based upon this analysis using the necessary Vermont Yankee torus parameters. Therefore, if an indication is found in these regions which does not meet the minimum wall thickness requirements of Table 1 or Figure 6 (the permissible corroded thickness of the free-shell region) or Figure 7 (the permissible corroded thickness of the local shell region adjacent to the ring girder), the following procedure may be performed using the appropriate Figure 8 or 9.

The procedure for use of Figures 8 and 9 for an indication in its final-blended and as-examined state is as follows:

1. Circumscribe the area of the indication and measure the diameter (D).

2. Determine the maximum indication depth (d).

3. Assure that no additional indications are found local to the circumscribed area within 24.64 inches or two-and-one-half-square-roots-of-mean-radius-times-thickness (i.e., $2.5\sqrt{Rt}$).

4. If the criterion of step 3 is violated, repeat the procedure starting with step 1 and include any indications which violate the criterion of step 3 in the circumscribed area.

5. Review Figure 6 or 7 to determine the arc region (S) of the torus shell which contains the circumscribed indications resulting from step 1.

6. If the measured indication depth (d) is less than the permissible corroded thickness from the appropriate Figure 6 or 7, the indication is acceptable and the remaining steps 7 through 9 may be skipped.

7. Determine the circumscribed diameter multiplier (F) from the table of Figure 8 or 9 based on the arc region (S) from step 5. If the circumscribed indications extend into other arc regions, use the largest multiplier (F).

8. Determine the equivalent diameter (D′) which circumscribes the indications:

$$D' = D \times F$$

9. Using D′ and the appropriate Figure 8 or 9 curve, determine the allowable indications depth d′ and compare it to the measured depth d:

$$d \leq d'$$

Note that the allowable depth (d′) shall be measured based on the uncorroded nominal shell thickness. Adjust the allowable depth (d′) to account for reduced wall thickness measured. Subtract the difference between the original wall thickness (T_0) and the measured wall thickness (t) from the allowable depth (d′) to obtain the adjusted d′. See Appendix C for sample calculations.

3.0 VENT SYSTEM SHELL STRESS ANALYSIS

TES has reviewed the calculation packages (References 9 through 16) and drawings (References 17 and 18) associated with the drywell vent system and has determined that the shell thicknesses used for the vent system

components during the Mark I Torus Requalification Program analyses of record were not reduced for corrosion. This philosophy was consistent with the decisions made for the torus shell as described in Section 2.0. The vent system components analyzed for shell stress are the vent pipe, vent pipe/header intersection, vent pipe/SRV Line penetrations, vent pipe/SRV Line support attachments, vent header, and downcomers.

The Mark I Torus Program vent system analyses (References 10, 13 and 14) were completed using a combination of hand calculations and two STARDYNE (Reference 8) models; a beam model (Figure 10) for general loading (Reference 9); and a detailed finite-element model (Figure 11) for the downcomer/vent header intersection (References 11, 12 and 15). The less detailed beam model analysis was possible in this case for two reasons: first, because GE provided the BWR Owner's Group detailed stress intensification factors for each specific BWR vent pipe/vent header intersection and secondly, because the anticipated stress levels in the vent system based on the initial scoping analyses appeared to be well within Code allowables for all components with the exception of the vent header at the downcomer intersection. The vent header/downcomer intersection eventually required a modification to the downcomer pairs, tie bars, even with the use of significantly more refined analytical techniques. The shell analyses of the four vent pipe/SRV Line penetrations (Reference 16) were completed using a combination of hand calculations and one detailed finite-element STARDYNE model (Figure 12). The shell analysis of the vent pipe/SRV Line support attachments were completed using the computer program CYLNOZ (in accordance with WRC Bulletin 107, Franklin Reaseach Center, 1-16-80) and are included within the SRV Line penetration analysis package (Reference 16).

Generally, as a result of low stress levels and in accordance with our five BWR clients' wishes, the final vent system analyses were completed using conservative bounding techniques to reduce costs and to provide timely results. Loads in most cases were combined absolutely for the two

event combinations analyzed. These two event combinations (Reference 10), a poolswell event (event combination 19) and a vent system chugging event (event combination 21), were determined to conservatively bound the remaining twenty-five combinations listed in the structural acceptance criteria (Reference 6). The resultant stress intensities were also conservatively calculated without regard to location and were compared to Code allowables.

Based on our recent review of this work, it does appear that an additional margin exists for some of the vent system components with regard to minimum shell thickness requirements and the remaining shell thicknesses available for corrosion to be reported on in Sections 3.1 and 3.2. It should be noted that the aforementioned analysis conservatisms could be reduced, through a moderate effort, using less conservative stress analysis techniques and the presently available loads.

3.1 Minimum Vent System Shell Thickness Requirements

TES has reviewed the vent system analysis packages (References 10 and 11) to determine the minimum shell thickness requirements for each of the major components: the vent pipe, vent pipe/header intersection, vent header and downcomers. The calculation of the minimum thickness requirements herein (Appendix A.2) is based on the methodology presented in Section 2.1 for the torus shell.

As described in Section 3.0, because of the known available margins, much of the vent system stress analysis was completed in a conservative fashion by hand. In most instances the amount of data presently available without completing a more refined analysis for each of the major components is limited. Therefore, additional conservative assumptions were required to determine the minimum vent system shell thickness requirements and resulting shell thickness remaining for corrosion for the major component locations as provided in Table 2. The vent pipe and vent header thickness requirements are determined for the free shell and the local shell regions adjacent to the vent mitred joint, the downcomers and vent

pipe/header intersection as defined in Figure 13. The downcomer thickness requirements are determined for the free shell and the local shell regions adjacent to the downcomer mitred joint as defined in Figure 16. The vent pipe/header intersection thickness requirements are determined in another calculation package (TES Calculation Package 7426-2) for the local shell regions adjacent to the vent pipe and vent header. The vent pipe thickness requirements are determined for the local shell regions adjacent to the SRV Line penetrations and SRV Line support attachments as defined in Figures 19, 20 and 24 (SRV Lines A, B, C and D).

3.2 Permissible Local Reduction in Vent System Thickness for an Indication

An indication which may be found upon inspection of the vent system components - the vent pipe, vent pipe/SRV Line penetrations, vent pipe/SRV Line support attachments, vent header, downcomers and downcomer miters - may be acceptable if it does not meet the screening criteria of 3.1, Table 2, provided that it meets the local stress criteria of the Code for the particular location of concern.

The generalized compatibility analysis of Appendix B, as described in Section 2.2, was used to perform these analyses as provided in Appendix B.2 and Figures 14 through 25 herein.

The procedure for the use of Figures 14 through 25 for an indication in its final-blended and as-examined state is as follows:

1. Circumscribe the area of the indication and measure the diameter (D).

2. Determine the maximum indication depth (d).

3. Assure that no additional indications are found local to the circumscribed area within two-and-one-half-square-roots-of-mean-radius-times-thickness (i.e., $2.5\sqrt{Rt}$) as listed below.

Vent System Component	Thickness in	Radius in	$2.5\sqrt{Rt}$ in
Vent Pipe	.250	40.625	7.97
Vent Pipe/SRV Penet.	.250	40.625	7.97
Vent Pipe/SRV Sup't	.250	40.625	7.97
Vent Header	.250	28.625	6.69
Downcomer	.250	11.875	4.31
	.375	11.875	5.28

4. If the criterion of step 3 is violated, repeat the procedure starting with step 1 and include any indications which violate the criterion of step 3 in the circumscribed area.

5. If the measured indication depth (d) is less than the permissible corroded thickness (remaining thickness) of Table 2 for the appropriate location, the indication is acceptable and the remaining steps may be skipped.

6. Review Figures 14 through 25 to determine the appropriate curve for the region of the vent system that contains the circumscribed indications.

7. Using D′ and the appropriate figure and curve, determine the allowable indications depth d′ and compare it to the measured depth d:

$$d \leq d'$$

Note that the allowable depth (d′) shall be measured based on the uncorroded nominal shell thickness. Adjust the allowable depth (d′) to account for reduced wall thickness measured. Subtract the difference between the original wall thickness (T_0) and the measured wall thickness (t) from the allowable depth (d′) to obtain the adjusted d′. See Appendix C for sample calculations.

4.0 REFERENCES

1. YAEC P.O. Number QA41434.

2. TES Analysis Package 5319-20, Rev. 1, Vermont Yankee Torus Shell Analysis.

3. TES Technical Report TR-5319-1, Rev. 2, Mark I Containment Program, Plant Unique Analysis Report of the Torus Suppression Chamber for Vermont Yankee Nuclear Power Station.

4. ASME Boiler and Pressure Vessel Code, Section III, Division 1, Subsection NE, Class MC Vessels, 1974 Edition through Summer 1977 Addenda.

5. Mark I Containment Program Load Definition Report, Document Number NEDO-21888, Rev. 2, November 1981.

6. Mark I Containment Program, Structural Acceptance Criteria, Plant Unique Analysis Application Guide, Document Number NEDO-24583-1, October 1979.

7. TES Computer Code TG-8, DISTRESS Computer Program Check, October 13, 1982.

8. Stardyne User Information Manual, January 1984.

9. TES Calculation Package 2252-10, Rev. 1, Vermont Yankee, Vent System Stardyne Beam Model Geometry.

10. TES Calculation Package 2252-5, Rev. 1, Vent Header and Intersection With Main Vent, Combined Loads, Vermont Yankee.

11. TES Calculation Package 2252-4, Rev. 1, Combined Loads, Vent System, Vent Header/Downcomer Intersection, Vermont Yankee.

12. TES Calculation Package 2252-3, Rev. 0, Vermont Yankee, Vent Header/Downcomer Intersection Analysis, Downcomer Chugging Load.

13. TES Calculation Package 5320-16, Rev. 0, Torus Vent System Acoustic Pressure Loads Evaluation - For All 5 Plants.

14. TES Calculation Package 5319-22, Rev. 0, Vermont Yankee, Vent System Fatigue Analysis.

15. TES Calculation Package 2252-2, Rev. 0, Vermont Yankee, Vent Header/Downcomer Intersection, Downcomer Condensation Oscillation Loading.

16. TES Calculation Package 5319-28, Rev. 0, SRV - Vent Pipe Penetration Stress Evaluation, Vermont Yankee, SRV Lines A-D.

17. CB&I Contract No. 9-6202, Drawing Numbers: 200, Rev I; 201, Rev 3; 211, Rev 0; 213, Rev 1; 214, Rev 6; and 219, Rev 4.

18. Vermont Yankee Project, Drawing Numbers: 5920-9987 SHT 1 of 4, Rev. 0; 6202-200, Rev. 0; 6202-201, Rev. 0; 6202-202, Rev. 0; 6202-211, Rev. 0; 6202-213, Rev. 0; 6202-214, Rev. 0; 6202-219, Rev. 0;

19. TES Project Quality Assurance Program, Project 7426, Rev. 0, November 28, 1990, Yankee Atomic Electric Company.

TELEDYNE ENGINEERING SERVICES

BY R.H.B. DATE 12-19-90
CHKD. BY [illegible] DATE 12-19-90

VERMONT YANKEE
SHELL THICKNESS REQUIREMENTS
CALCULATION PACKAGE 7426-1

TABLE 1

MINIMUM TORUS SHELL THICKNESS REQUIREMENTS
VERMONT YANKEE NUCLEAR STATION

Elem/Arc No. (Midbay)	Required Thickness (inches)	Remaining Thickness (inches)
27/S1	.236	.348
25/S2	.269	.315
23/S3	.305	.279
21/S4	.352	.232
19/S5	.359	.225
17/S6	.392	.192
17/S7	.392	.192
15/S8	.360	.224
13/S9	.322	.262
11/S10	.259	.325
(Ring Girder) 159/S1	.150	.434
153/S2	.124	.460
147/S3	.150	.434
141/S4	.113	.471
132/S5	.134	.450
132/S6	.134	.450
126/S7	.151	.433
120/S8	.148	.436
114/S9	.181	.403

NOTE: Only lower shell elements are listed.

TELEDYNE ENGINEERING SERVICES

BY R.H.B. DATE 12-19-90
CHKD. BY [illegible] DATE 12-19-90

VERMONT YANKEE
SHELL THICKNESS REQUIREMENTS
CALCULATION PACKAGE 7426-1

PROJ. NO. 7426

TABLE 2

MINIMUM VENT SYSTEM THICKNESS REQUIREMENTS
VERMONT YANKEE NUCLEAR STATION

Component Location	Shell Thickness (in)	Required Thickness (in)	Remaining Thickness (in)
Vent Pipe	.250	.158	.092
Vent Header	.250	.111	.139
Downcomer	.250	.156	.094
Downcomer	.375	.235	.140
Vent Pipe at Drywell	.250	.105	.145
Vent Header at Mitre Joint	.250	.234	.016
Vent Header at Downcomer	.250	.244	.006
Downcomer at Mitre Joint	.250	.104	.146
Downcomer at Mitre Joint	.375	.156	.219
VP/SRV (A,B,C,D) Penetration at Nozzle Inter.	.750	.630	.120
VP/SRV (A,B,C,D) Penet. at Edge of Wagon Wheel	.750	.568	.182
VP/SRV (A,B,C,D) Penet. at Edge of 3/4" Pad	.250	.241	.009
VP/SRV (A,B,C,D) Lower Support	.250	.241	.009

VYC-1032 ATTACHMENT B

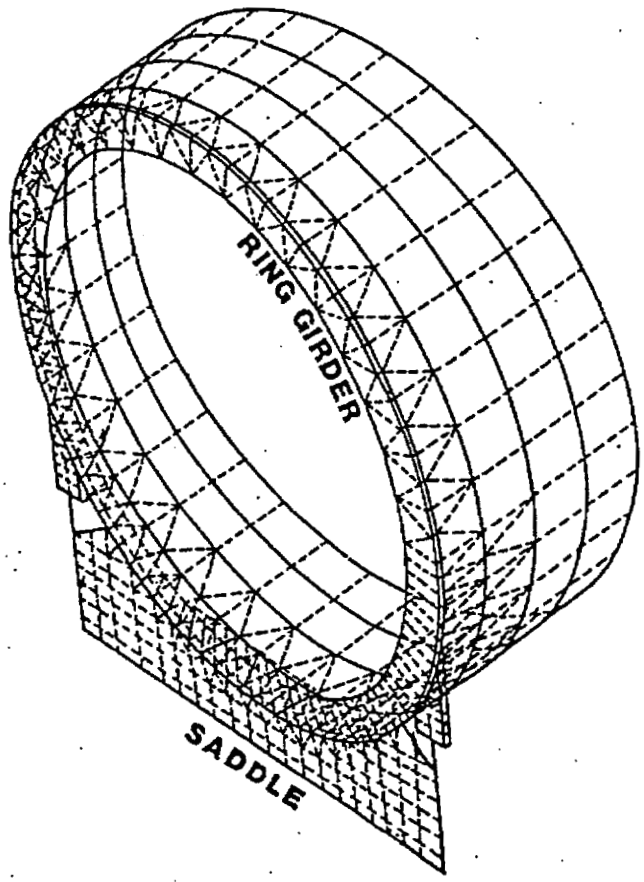

ROTATED AXIS VIEW - VERMONT YANKEE
1/32 DETAILED SHELL MODEL

FIGURE 1

TELEDYNE ENGINEERING SERVICES

BY R.H.B. DATE 12-21-90
CHKD. BY RAE DATE 12-21-90

VERMONT YANKEE
SHELL THICKNESS REQUIREMENTS
CALCULATION PACKAGE 7426-1

SHEET NO. 23 OF 46
PROJ. NO. 7426

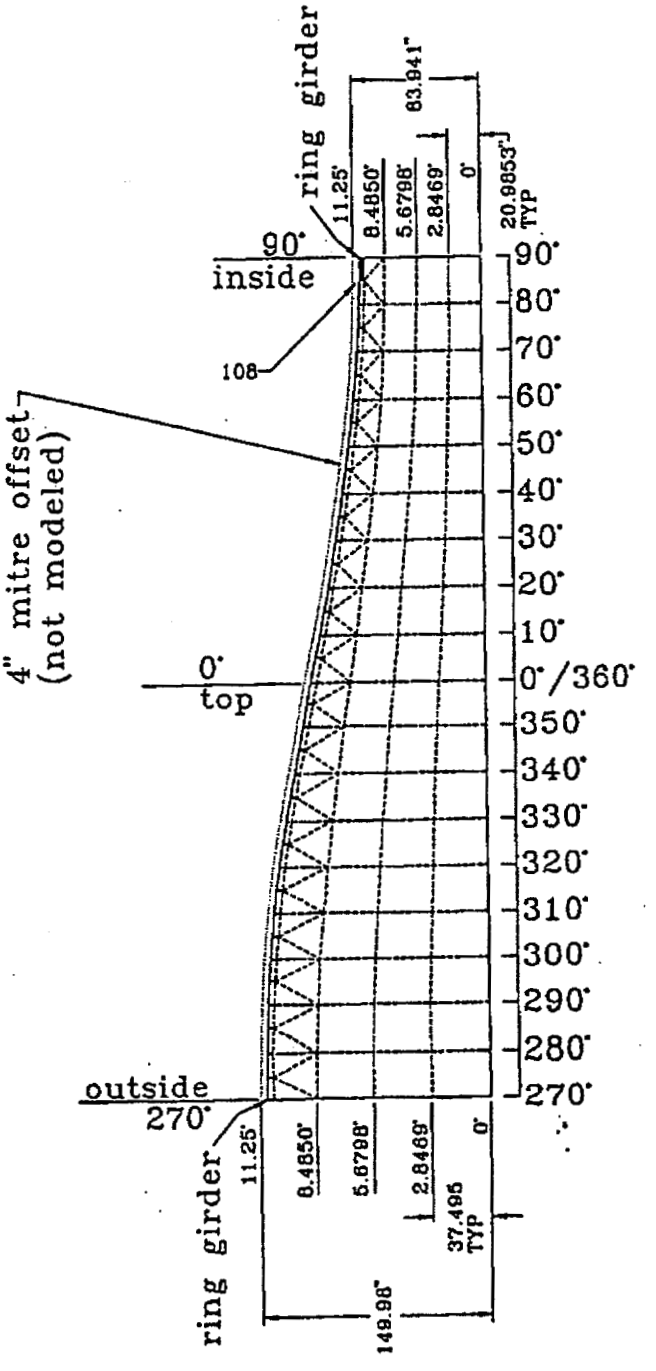

MAXIMUM STRESS LOCATIONS–VERMONT YANKEE
1/32 MODEL–UPPER HALF OF SHELL

FIGURE 2

TELEDYNE ENGINEERING SERVICES

BY E.H.B. DATE 12-21-90
CHKD. BY RK DATE 12-21-90

VERMONT YANKEE
SHELL THICKNESS REQUIREMENTS
CALCULATION PACKAGE 7426-1

SHEET NO. 24 OF 46
PROJ. NO. 7426

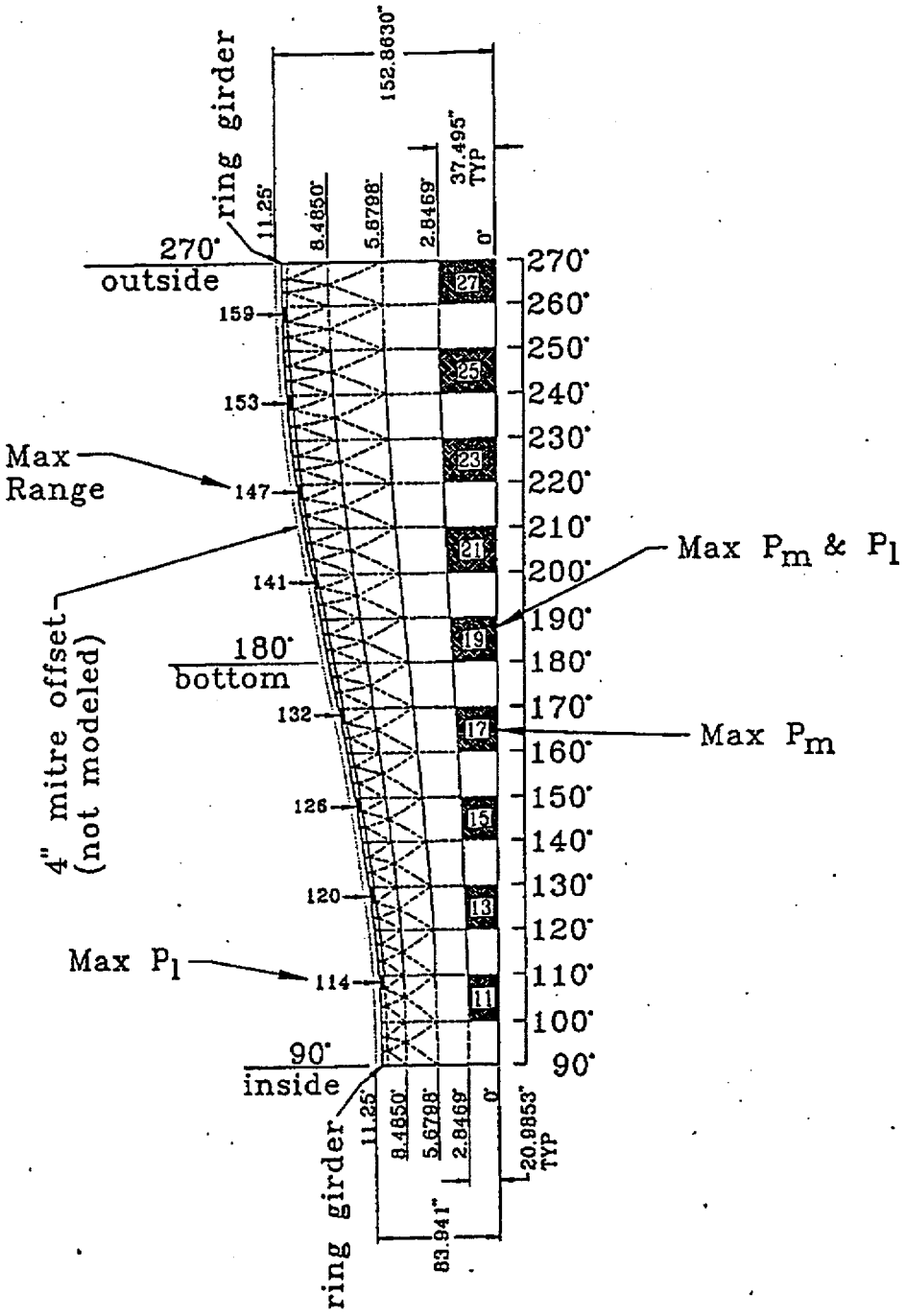

MAXIMUM STRESS LOCATIONS–VERMONT YANKEE
1/32 MODEL–LOWER HALF OF SHELL

FIGURE 3

TELEDYNE ENGINEERING SERVICES

BY R.H.B. DATE 12-21-90
CHKD. BY RAE DATE 12-21-90

VERMONT YANKEE
SHELL THICKNESS REQUIREMENTS
CALCULATION PACKAGE 7426-1

SHEET NO. 25 OF 46
PROJ. NO. 7426

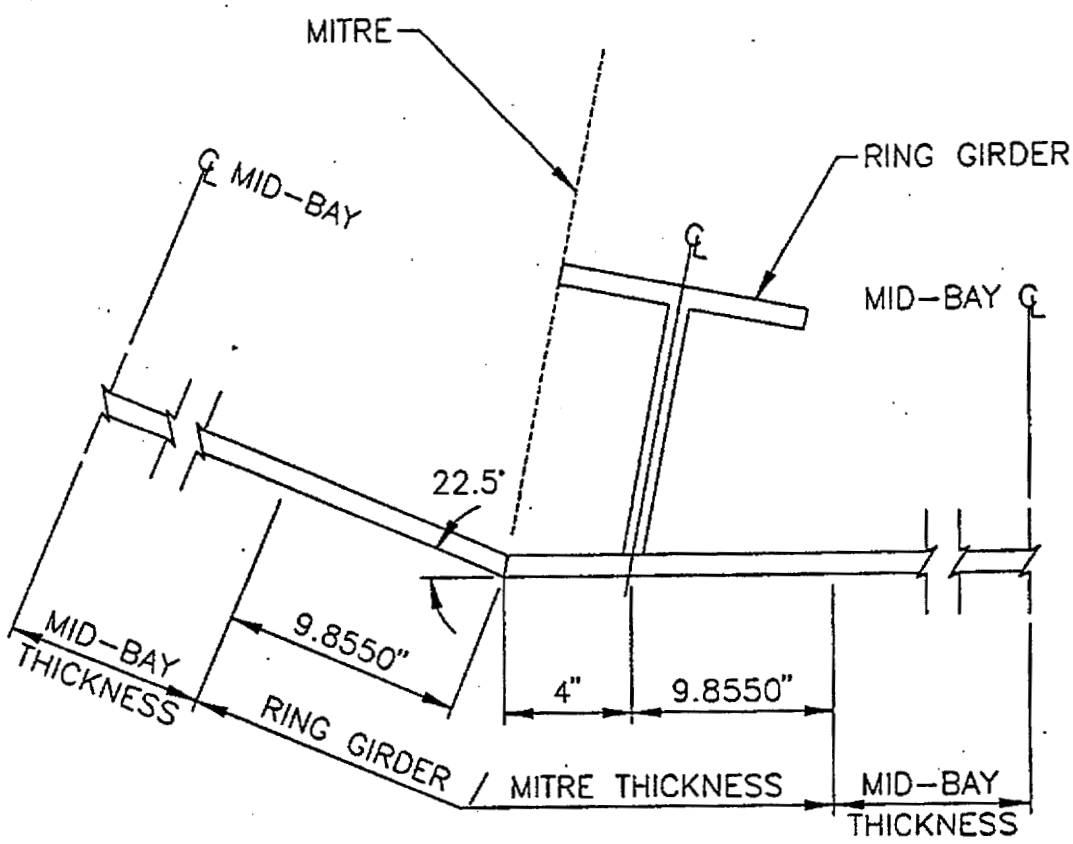

$$1.0\sqrt{RT} = 9.8550"$$

LOCAL TORUS SHELL STRESS REGIONS
VERMONT YANKEE NUCLEAR STATION

FIGURE 4

TELEDYNE ENGINEERING SERVICES

BY E.H.B. DATE 12-21-90
CHKD. BY RKE DATE 12-21-90

VERMONT YANKEE
SHELL THICKNESS REQUIREMENTS
CALCULATION PACKAGE 7426-1

SHEET NO. 26 OF 46
PROJ. NO. 7426

CLASS MC COMPONENTS AND INTERNAL STRUCTURES

EVENT COMBINATIONS		SRV	SRV + EQ		SSA TSA		SSA + EQ TSA + EQ				SSA + SRV TSA + SRV		SSA + SRV + EQ TSA + SRV + EQ				DBA		DBA + EQ				DBA + SRV		DBA + EQ + SRV			
						CO, CH			CO, CH			CO, CH			CO, CH		PS (1)	CO, CH	PS		CO, CH		PS	CO, CH	PS		CO, CH	
TYPE OF EARTHQUAKE			O	S			O	S	O	S			O	S	O	S			O	S	O	S			O	S	O	S
COMBINATION NUMBER		1	2	3	4	5	6	7	8	9	10	11	12	13	14	15	16	17	18	19	20	21	22	23	24	25	24	27
LOADS																												
Normal (2)	N	X	X	X	X	X	X	X	X	X	X	X	X	X	X	X	X	X	X	X	X	X	X	X	X	X	X	X
Earthquake	EQ		X	X			X	X	X	X			X	X	X	X			X	X	X	X			X	X	X	X
SRV Discharge	SRV	X	X	X							X	X	X	X	X	X							X	X	X	X	X	X
LOCA Thermal	T_A				X	X	X	X	X	X	X	X	X	X	X	X	X	X	X	X	X	X	X	X	X	X	X	X
LOCA Reactions	R_A				X	X	X	X	X	X	X	X	X	X	X	X	X	X	X	X	X	X	X	X	X	X	X	X
LOCA Quasi-Static Pressure	P_A				X	X	X	X	X	X	X	X	X	X	X	X	X	X	X	X	X	X	X	X	X	X	X	X
LOCA Pool Swell	P_{PS}																X		X	X			X		X	X		
LOCA Condensation Oscillation	P_{CO}					X			X	X		X			X	X		X			X	X		X			X	X
LOCA Chugging	P_{CH}					X			X	X		X			X	X		X			X	X		X			X	X
STRUCTURAL ELEMENT	EQM																											
External Class MC																												
Torus, External Vent Pipe, Bellows, Drywell (at Vent), Attachment Welds, Torus Supports, Seismic Restraints	1	A	B	C	A	A	B	C	B	C	A	A	B	C	B	C	A (3, 6)	A	B (3, 6)	C	B	C	C	C	C	C	C	C
Internal Vent Pipe																												
General and Attachment Welds	2	A	B	C	A	A	B	C	B	C	A	A	B	C	B	C	A (3, 5)	A	B (3, 5)	C	B	C	C	C	C	C	C	C
At Penetrations (e.g., Header)	3	A	B	C	A	A	B	C	B	C	A	A	B	C	B	C	A (3)	A	B (3)	C	B	C	C	C	C	C	C	C
Vent Header																												
General and Attachment Welds	4	A	B	C	A	A	B	C	B	C	A	A	B	C	B	C	A (3, 5)	A	B (3, 5)	C	B	C	C	C	C	C	C	C
At Penetrations (e.g., Downcomers)	5	A	B	C	A	A (4)	B	C	B (4)	C	A	A (4)	B	C	B (4)	C	A (3, 4, 5)	A (4)	B (3, 4, 5)	C	B (4)	C	C	C	C	C	C	C
Downcomers																												
General and Attachment Welds	6	A	B	C	A	A	B	C	B	C	A	A	B	C	B	C	A (3, 5)	A	B (3, 5)	C	B	C	C	C	C	C	C	C
Internal Supports	7	A	B	C	A	A	B	C	B	C	A	A	B	C	B	C	A	A	B	C	B	C	C	C	C	C	C	C
Internal Structures																												
General	8	A	B	C	A	A	C	D	C	D	C	C	D	E	D	E	E	E	E	E	E	E	E	E	E	E	E	E
Vent Deflector	9	A	B	C	A	A	C	D	C	D	C	C	D	D	D	D	M	D	D	D	D	D	D	D	D	D	D	D

MARK I STRUCTURAL ACCEPTANCE CRITERIA EVENT COMBINATIONS

FIGURE 5

TELEDYNE ENGINEERING SERVICES

BY R.H.B. DATE 12-21-90
CHKD. BY RNE DATE 12-21-90

VERMONT YANKEE
SHELL THICKNESS REQUIREMENTS
CALCULATION PACKAGE 7426-1

SHEET NO. 27 OF 46
PROJ. NO. 7426

PERMISSIBLE CORRODED THICKNESS FOR THE TORUS CROSS-SECTION AT MID-BAY (FREE SHELL REGION) VERMONT YANKEE NUCLEAR STATION

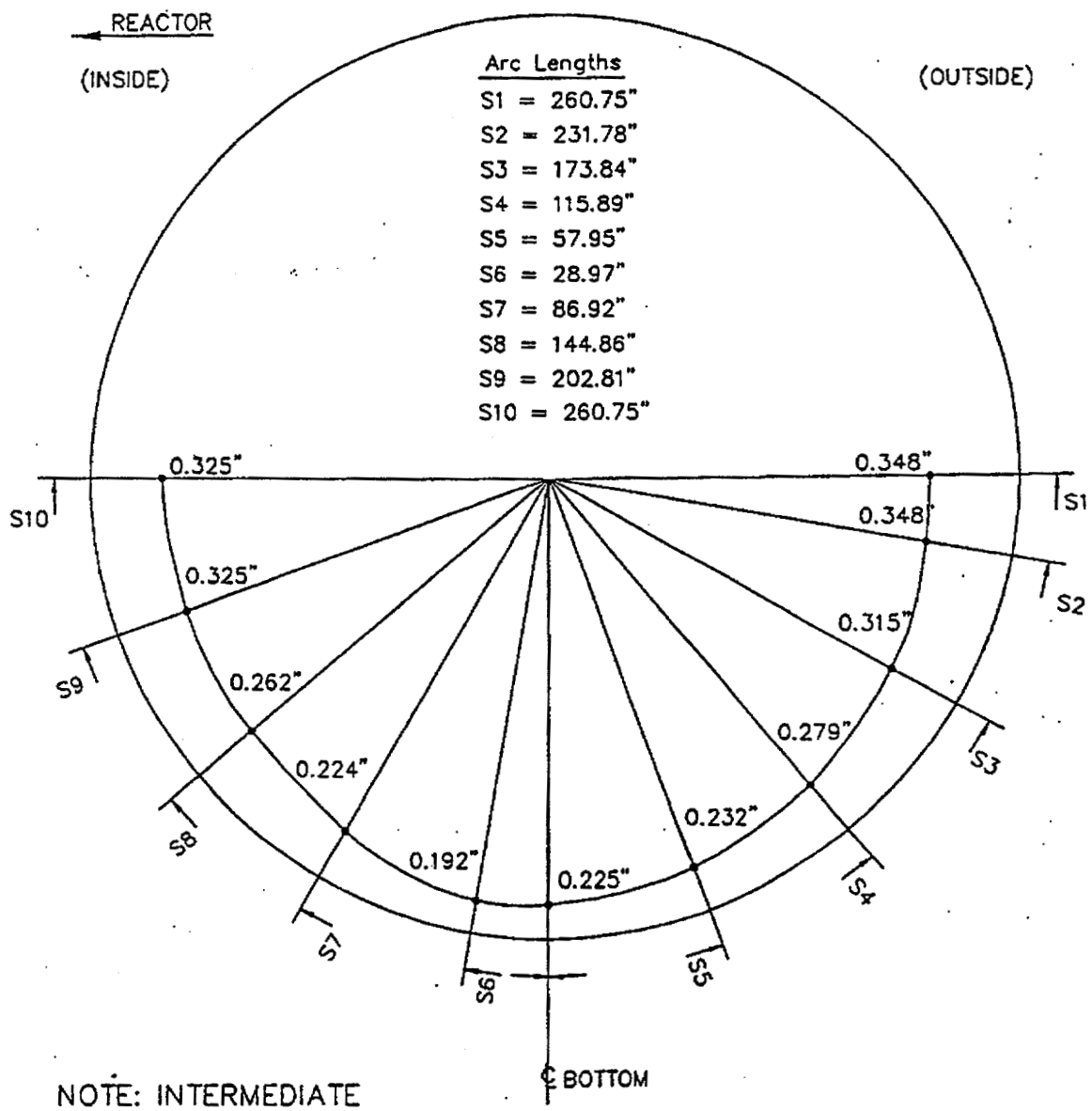

NOTE: INTERMEDIATE VALUES MAY BE INTERPOLATED

FIGURE 6

TELEDYNE ENGINEERING SERVICES

BY R.H.B. DATE 12-21-90
CHKD. BY RJE DATE 12-21-90

VERMONT YANKEE
SHELL THICKNESS REQUIREMENTS
CALCULATION PACKAGE 7426-1

SHEET NO. 28 OF 46
PROJ. NO. 7426

PERMISSIBLE CORRODED THICKNESS FOR THE TORUS CROSS-SECTION ADJACENT TO RING GIRDER (LOCAL SHELL REGION) VERMONT YANKEE NUCLEAR STATION

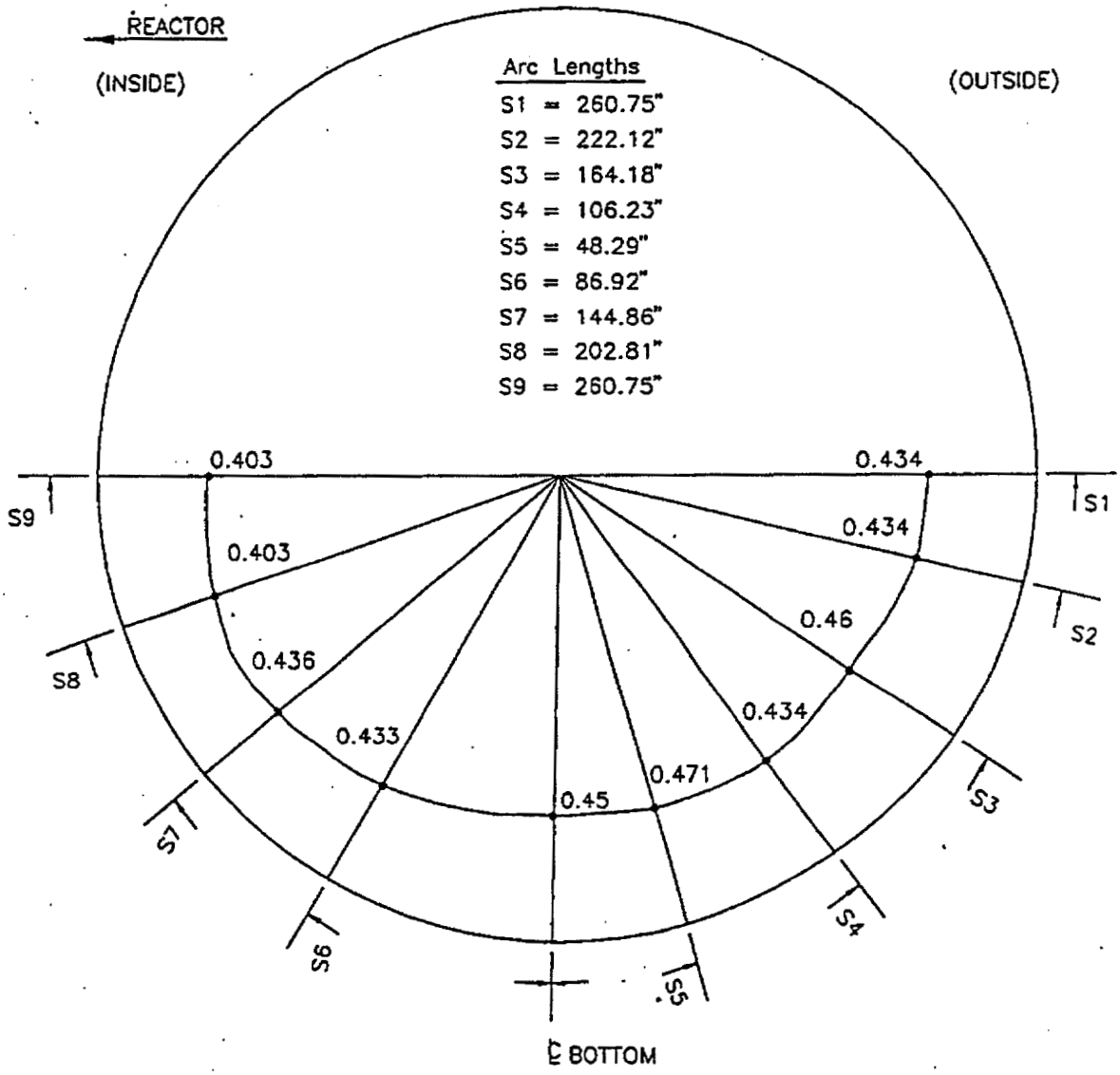

NOTE: INTERMEDIATE VALUES MAY BE INTERPOLATED

FIGURE 7

TELEDYNE ENGINEERING SERVICES

BY R.H.B. DATE 12-21-90
CHKD. BY RK DATE 12-21-90

VERMONT YANKEE
SHELL THICKNESS REQUIREMENTS
CALCULATION PACKAGE 7426-1

SHEET NO. 29 OF 46
PROJ. NO. 7426

PERMISSIBLE SIZE RANGE FOR INDICATION FREE SHELL REGION OF THE TORUS VERMONT YANKEE NUCLEAR STATION

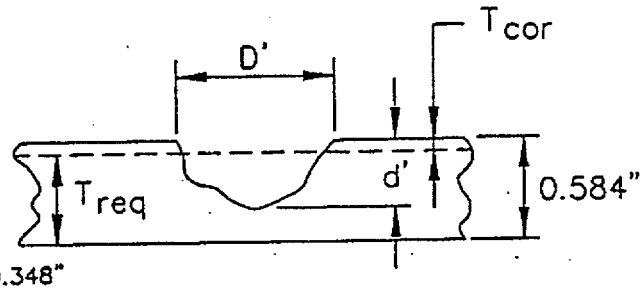

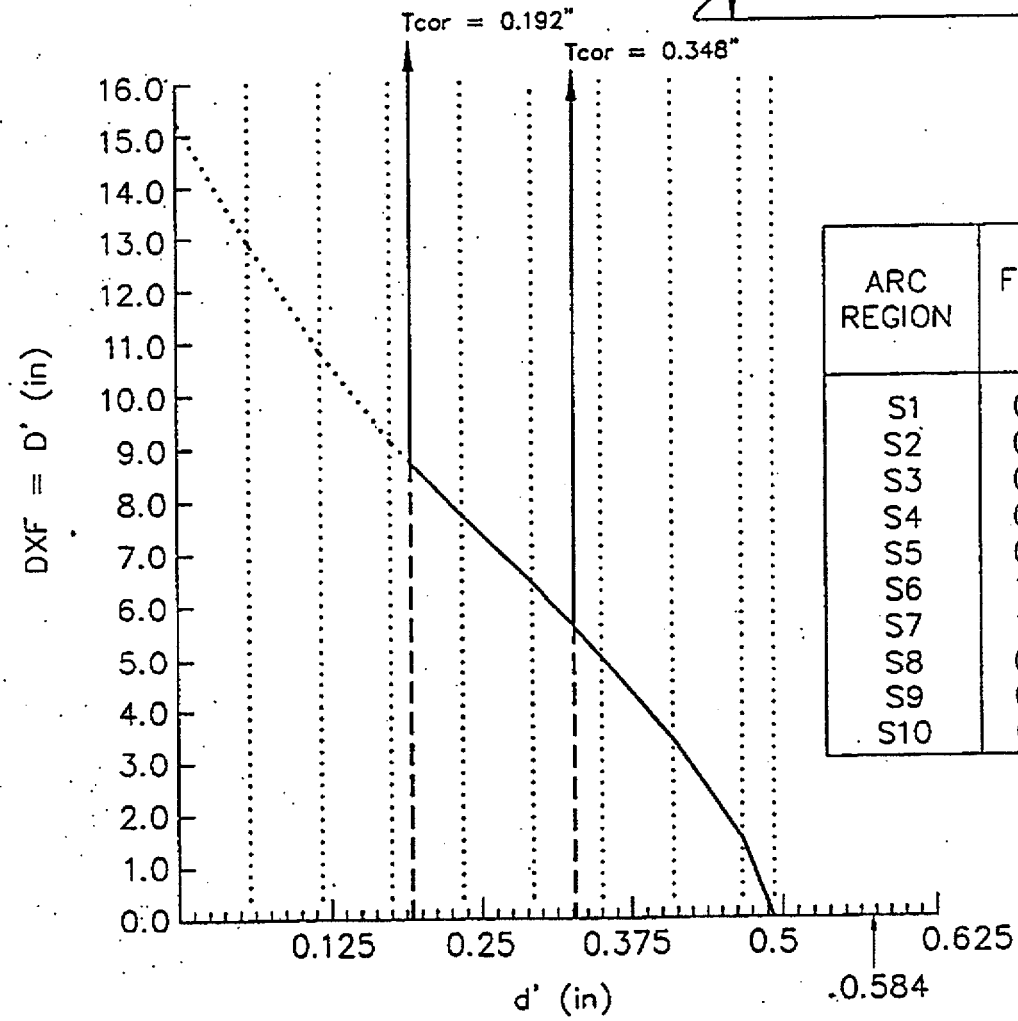

ARC REGION	FACTOR "F"	GEN CORR. Tcor
S1	0.776	0.348
S2	0.828	0.315
S3	0.883	0.279
S4	0.948	0.232
S5	0.957	0.225
S6	1.000	0.192
S7	1.000	0.192
S8	0.958	0.224
S9	0.906	0.262
S10	0.812	0.325

FIGURE 8

TELEDYNE ENGINEERING SERVICES

BY R.H.B. DATE 12-21-90
CHKD. BY RKE DATE 12-21-90

VERMONT YANKEE
SHELL THICKNESS REQUIREMENTS
CALCULATION PACKAGE 7426-1

SHEET NO. 30 OF 46
PROJ. NO. 7426

PERMISSIBLE SIZE RANGE FOR INDICATION
RING GIRDER REGION OF THE TORUS
VERMONT YANKEE NUCLEAR STATION

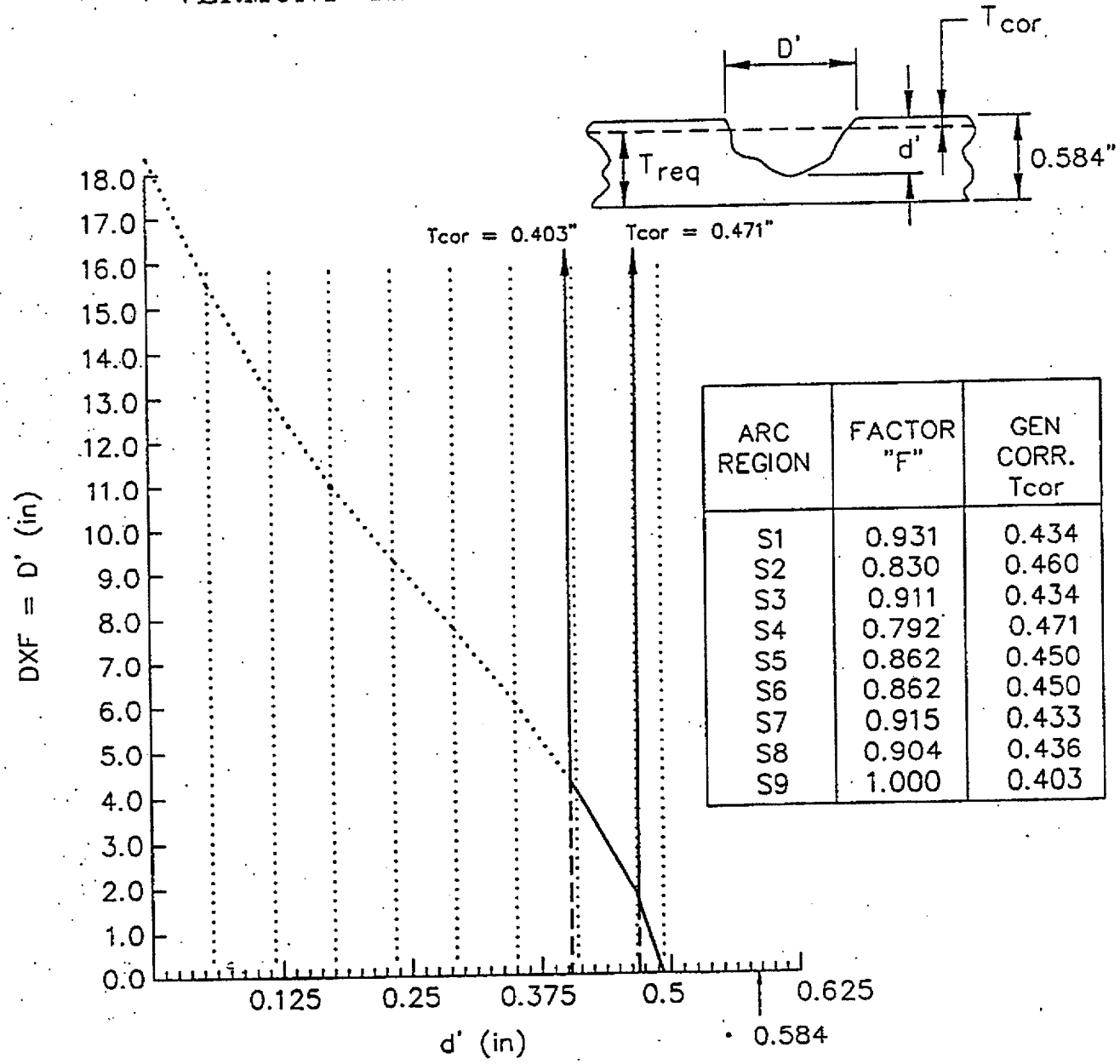

ARC REGION	FACTOR "F"	GEN CORR. Tcor
S1	0.931	0.434
S2	0.830	0.460
S3	0.911	0.434
S4	0.792	0.471
S5	0.862	0.450
S6	0.862	0.450
S7	0.915	0.433
S8	0.904	0.436
S9	1.000	0.403

FIGURE 9

TELEDYNE ENGINEERING SERVICES

BY R.H.B. DATE 12-21-90
CHKD. BY RAE DATE 12-21-90

VERMONT YANKEE
SHELL THICKNESS REQUIREMENTS
CALCULATION PACKAGE 7426-1

SHEET NO. 31 OF 46
PROJ. NO. 7426

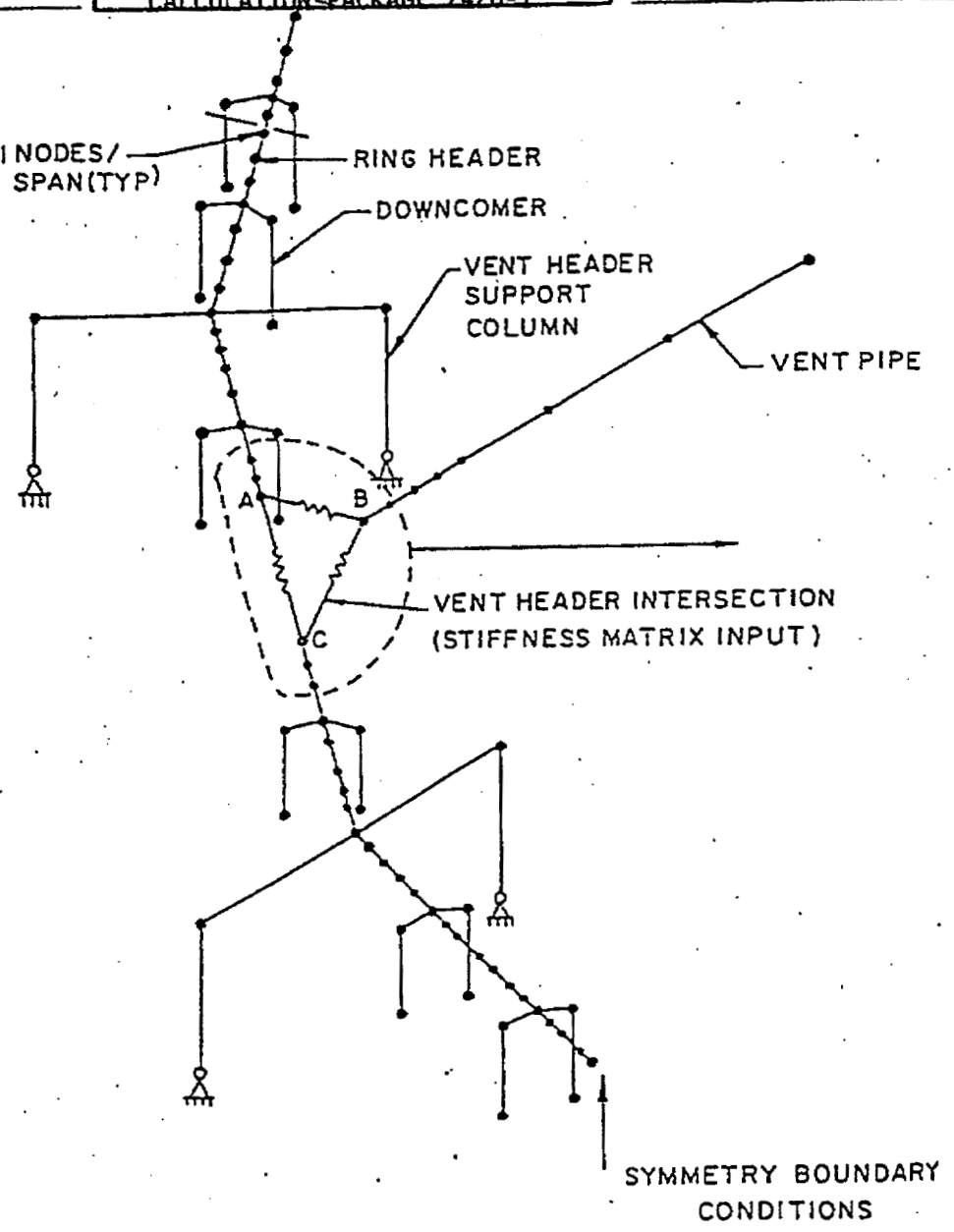

VENT SYSTEM BEAM MODEL,
VERMONT YANKEE NUCLEAR STATION

FIGURE 10

TELEDYNE ENGINEERING SERVICES

BY R.H.B. DATE 12-21-90
CHKD. BY RJE DATE 12-21-90

VERMONT YANKEE
SHELL THICKNESS REQUIREMENTS
CALCULATION PACKAGE 7426-1

SHEET NO. 32 OF 46
PROJ. NO. 7426

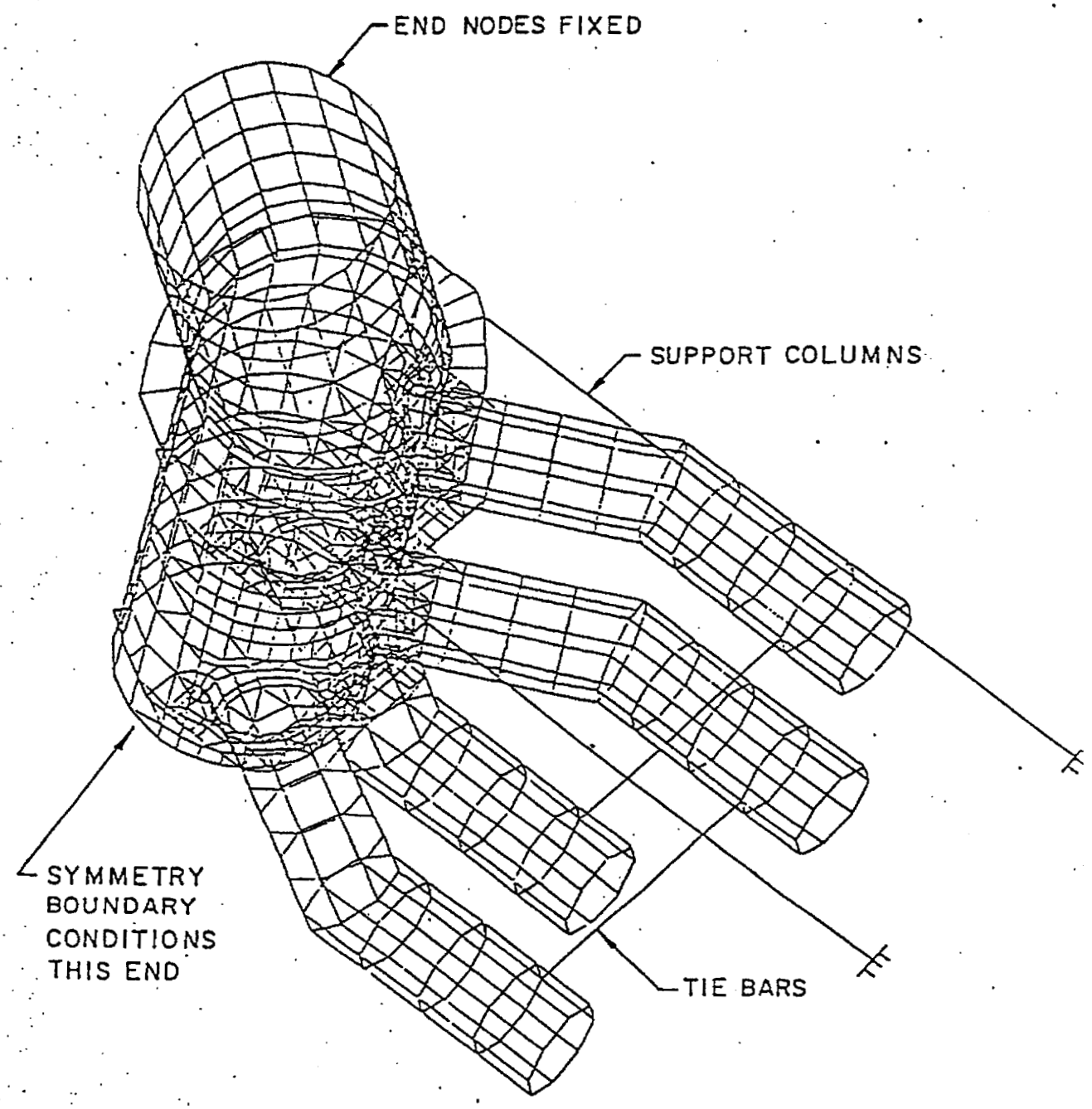

VENT HEADER/DOWNCOMER INTERSECTION MODEL,
VERMONT YANKEE NUCLEAR STATION

FIGURE 11

TELEDYNE ENGINEERING SERVICES

BY R.H.B. DATE 12-21-90
CHKD. BY CKE DATE 12-21-90

VERMONT YANKEE
SHELL THICKNESS REQUIREMENTS
CALCULATION PACKAGE 7426-1

SHEET NO. 33 OF 46
PROJ. NO. 7426

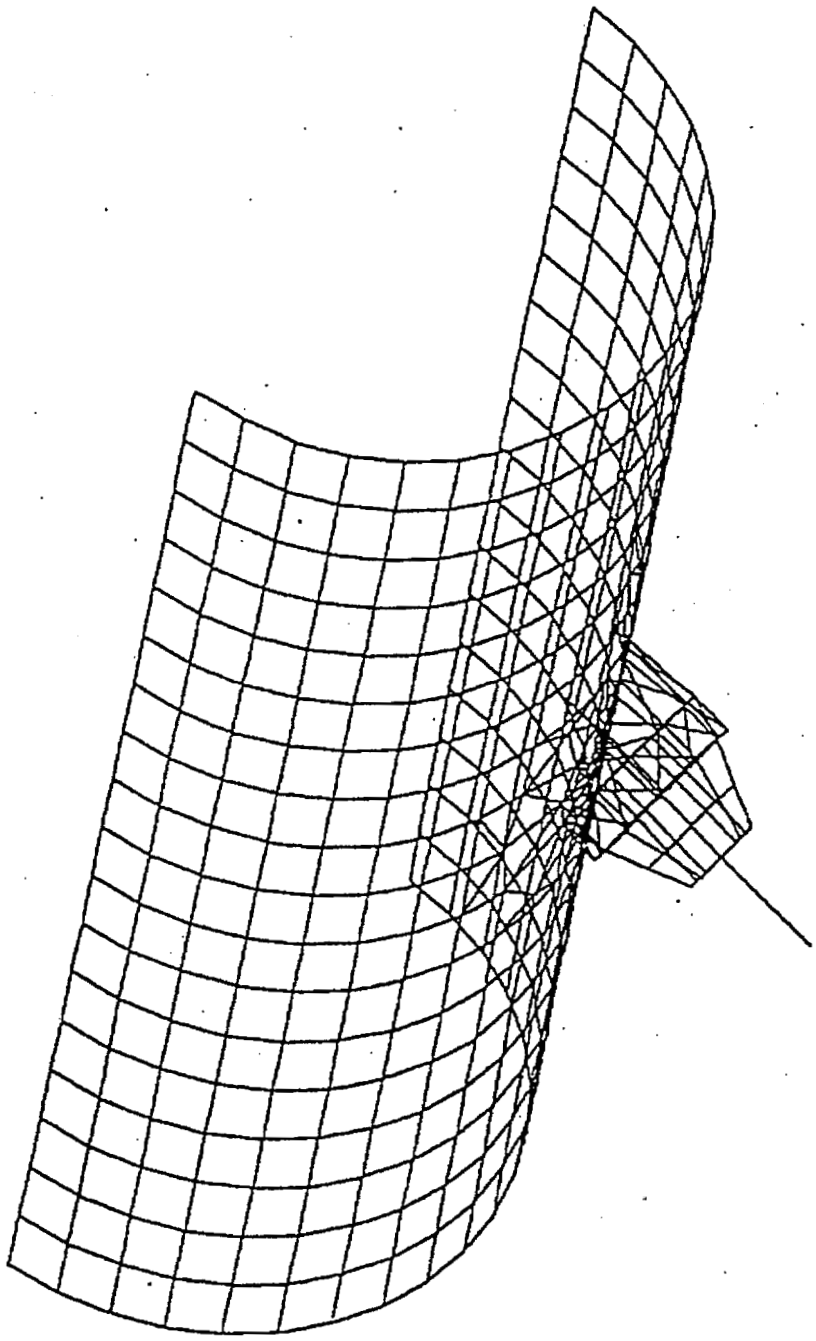

VENT PIPE/SRV LINES A THRU D PENETRATION STARDYNE COMPUTER MODEL, VERMONT YANKEE NUCLEAR STATION

FIGURE 12

TELEDYNE ENGINEERING SERVICES

BY R.H.B. DATE 12-21-90
CHKD. BY RKE DATE 12-21-90

VERMONT YANKEE
SHELL THICKNESS REQUIREMENTS
CALCULATION PACKAGE 7426-1

SHEET NO. 34 OF 46
PROJ. NO. 7426

FREE AND LOCAL SHELL REGIONS FOR THE VENT HEADER VERMONT YANKEE NUCLEAR STATION

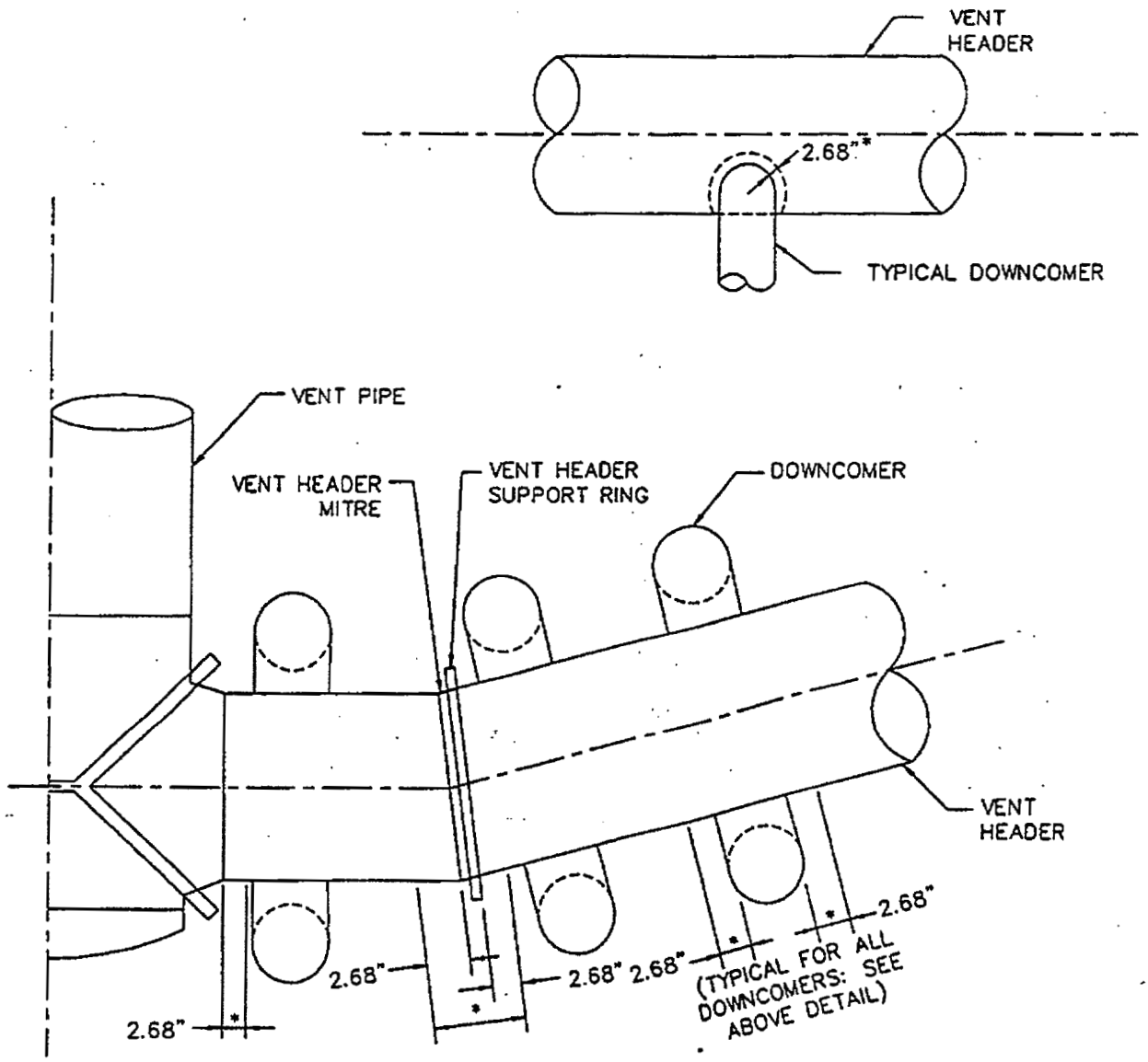

* LOCAL REGIONS $(1.0\sqrt{RT}) = 2.68"$

FIGURE 13

TELEDYNE ENGINEERING SERVICES

BY R.H.B. DATE 12-21-90
CHKD. BY RJE DATE 12-21-90

VERMONT YANKEE
SHELL THICKNESS REQUIREMENTS
CALCULATION PACKAGE 7426-1

SHEET NO. 35 OF 46
PROJ. NO. 7426

PERMISSIBLE SIZE RANGE FOR INDICATION
VENT PIPE
VERMONT YANKEE NUCLEAR STATION

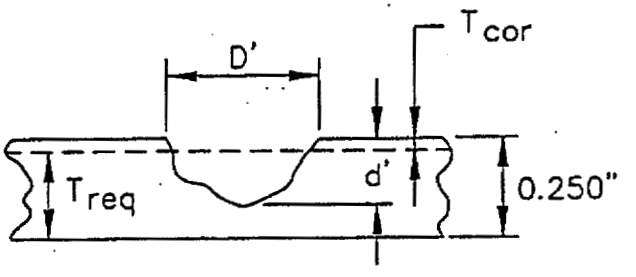

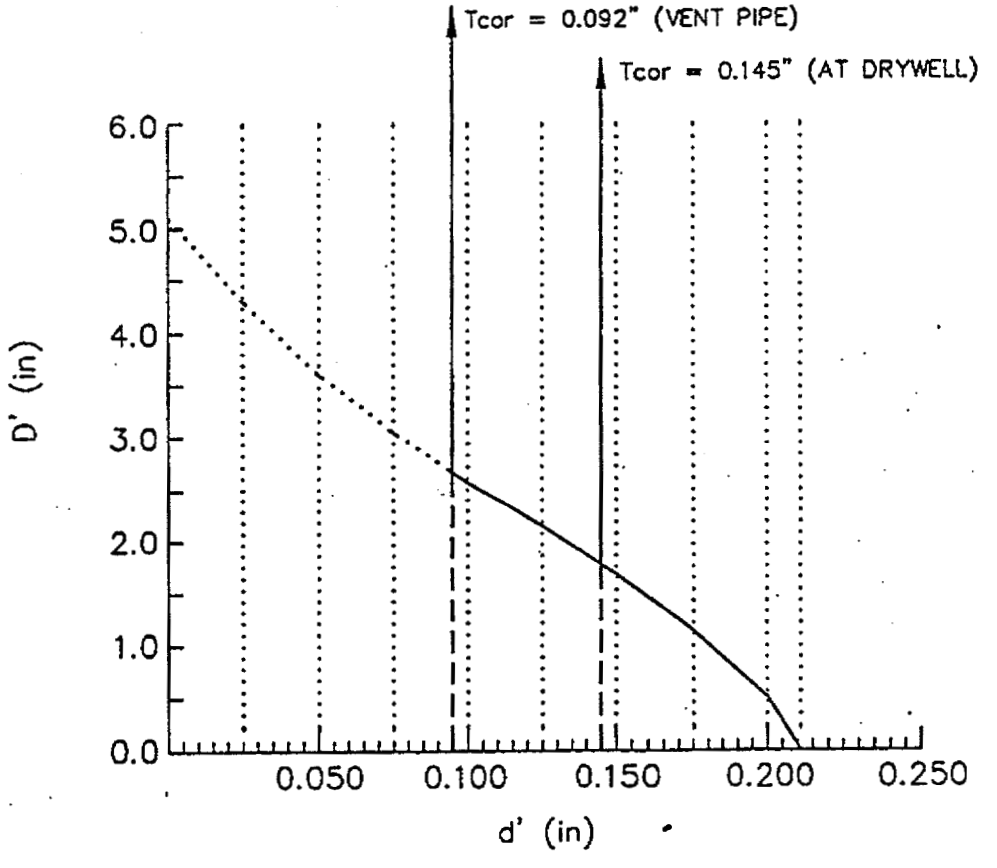

FIGURE 14

TELEDYNE ENGINEERING SERVICES

BY R.H.B. DATE 12-21-90
CHKD. BY RJE DATE 12-21-90

VERMONT YANKEE
SHELL THICKNESS REQUIREMENTS
CALCULATION PACKAGE 7426-1

SHEET NO. 36 OF 46
PROJ. NO. 7426

PERMISSIBLE SIZE RANGE FOR INDICATION
VENT HEADER
VERMONT YANKEE NUCLEAR STATION

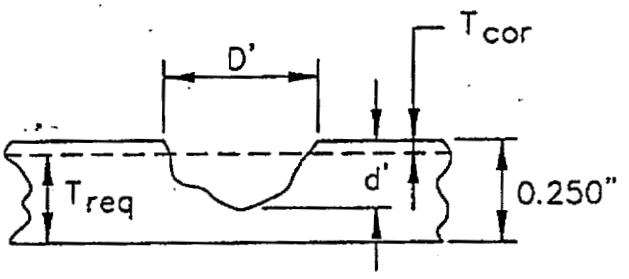

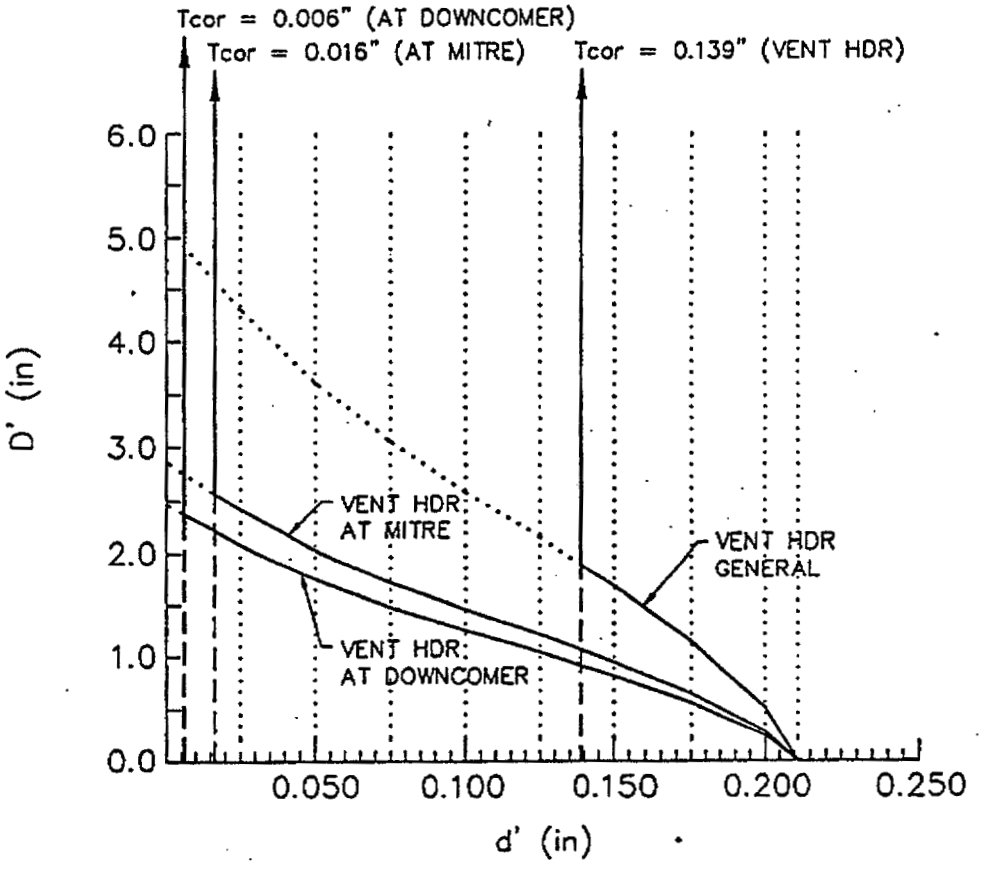

FIGURE 15

TELEDYNE ENGINEERING SERVICES

BY R.H.B. DATE 12-21-90
CHKD. BY RJE DATE 12-21-90

VERMONT YANKEE
SHELL THICKNESS REQUIREMENTS
CALCULATION PACKAGE 7426-1

SHEET NO. 37 OF 46
PROJ. NO. 7426

FREE AND LOCAL SHELL REGIONS FOR THE DOWNCOMERS VERMONT YANKEE NUCLEAR STATION

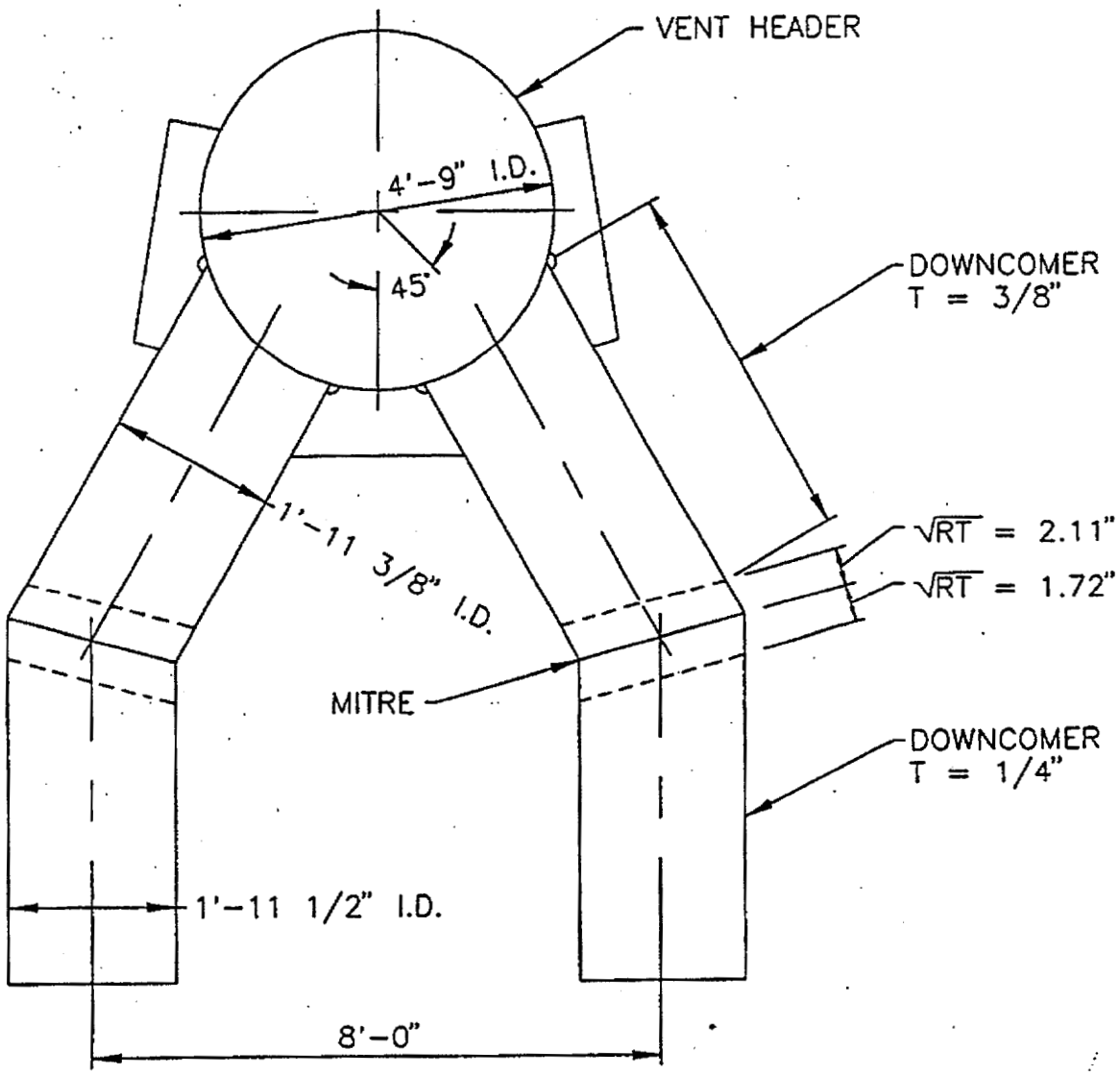

FIGURE 16

TELEDYNE ENGINEERING SERVICES

BY R.H.B. DATE 11-21-91
CHKD. BY RAE DATE 11-21-91

VERMONT YANKEE
SHELL THICKNESS REQUIREMENTS
CALCULATION PACKAGE 7426-1

SHEET NO. 38 OF 46
PROJ. NO. 7426
Revision 1

PERMISSIBLE SIZE RANGE FOR INDICATION
LOWER DOWNCOMER
VERMONT YANKEE NUCLEAR STATION

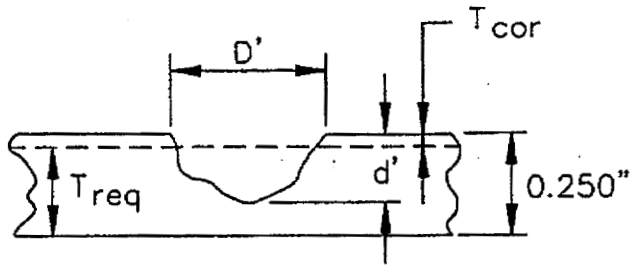

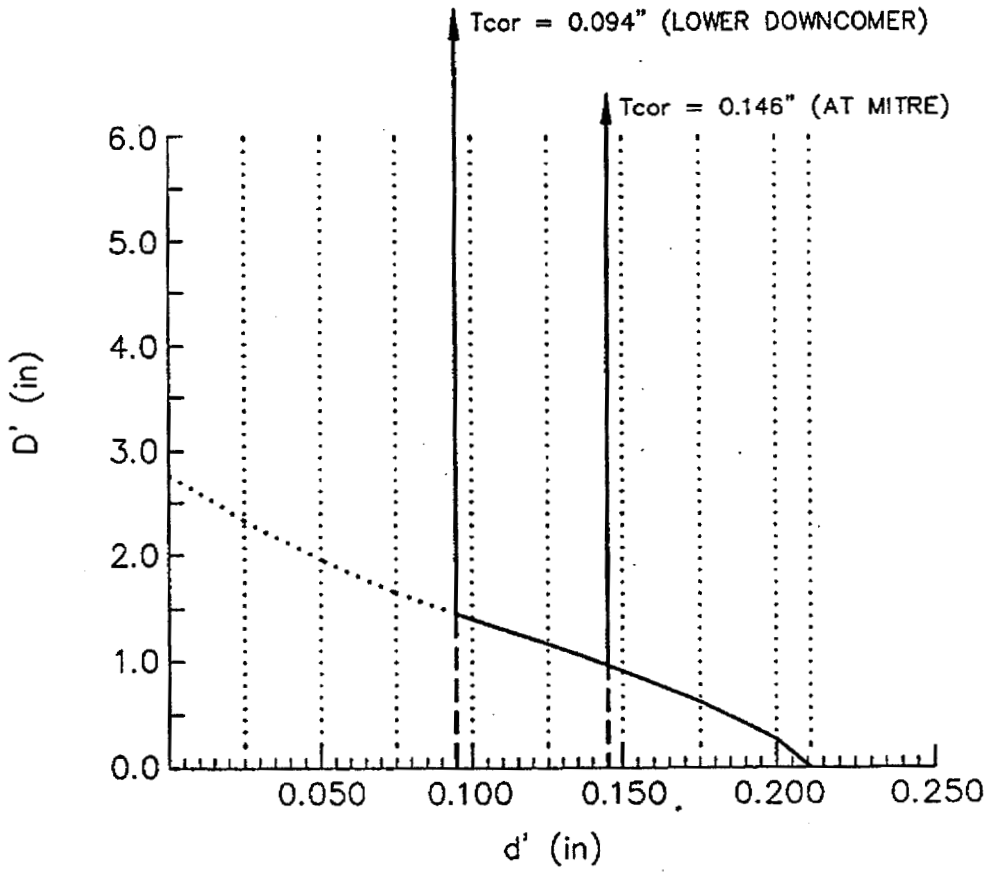

FIGURE 17

PERMISSIBLE SIZE RANGE FOR INDICATION UPPER DOWNCOMER VERMONT YANKEE NUCLEAR STATION

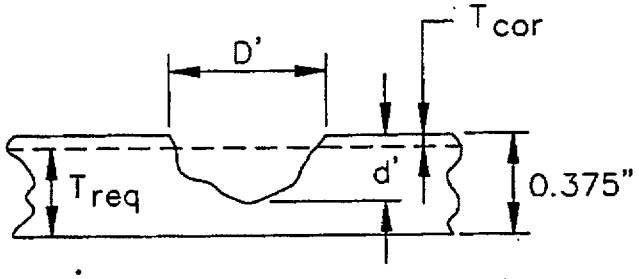

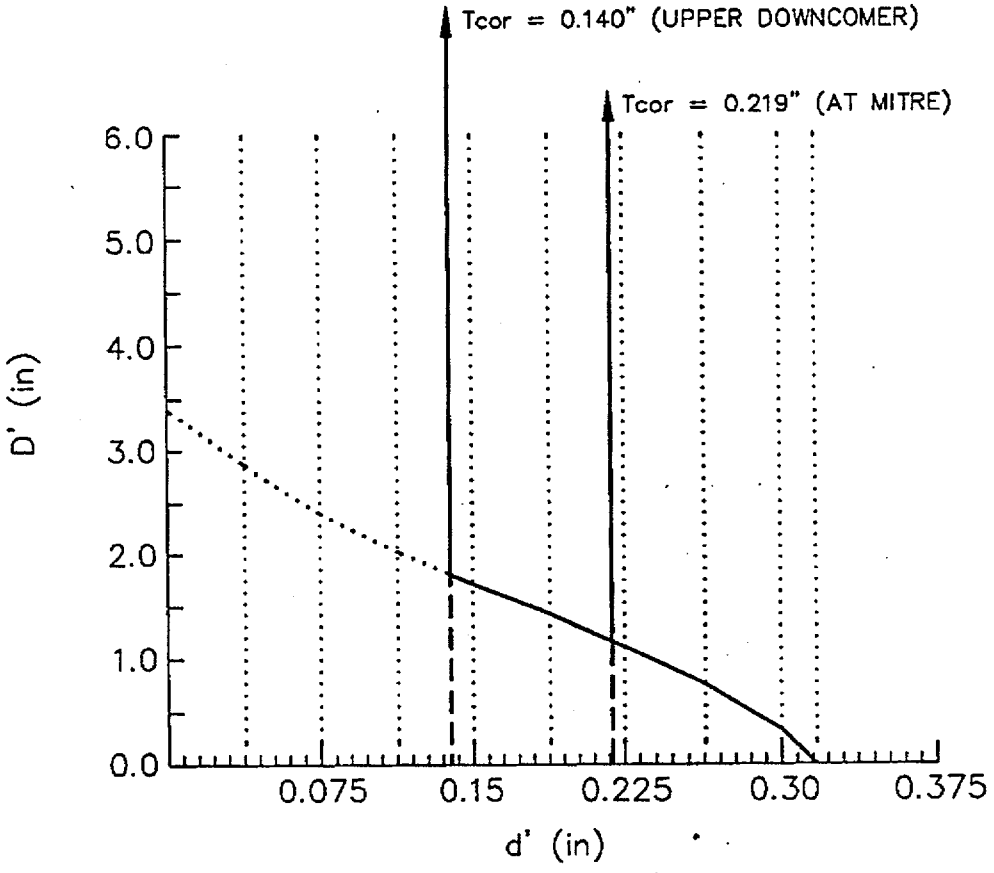

FIGURE 18

TELEDYNE ENGINEERING SERVICES

BY R.H.B. DATE 12-21-90
CHKD. BY RKE DATE 12-21-90

VERMONT YANKEE
SHELL THICKNESS REQUIREMENTS
CALCULATION PACKAGE 7426-1

SHEET NO. 40 OF 46
PROJ. NO. 7426

VENT SYSTEM VENT PIPE/SRV LINES A THRU D
VERMONT YANKEE NUCLEAR STATION

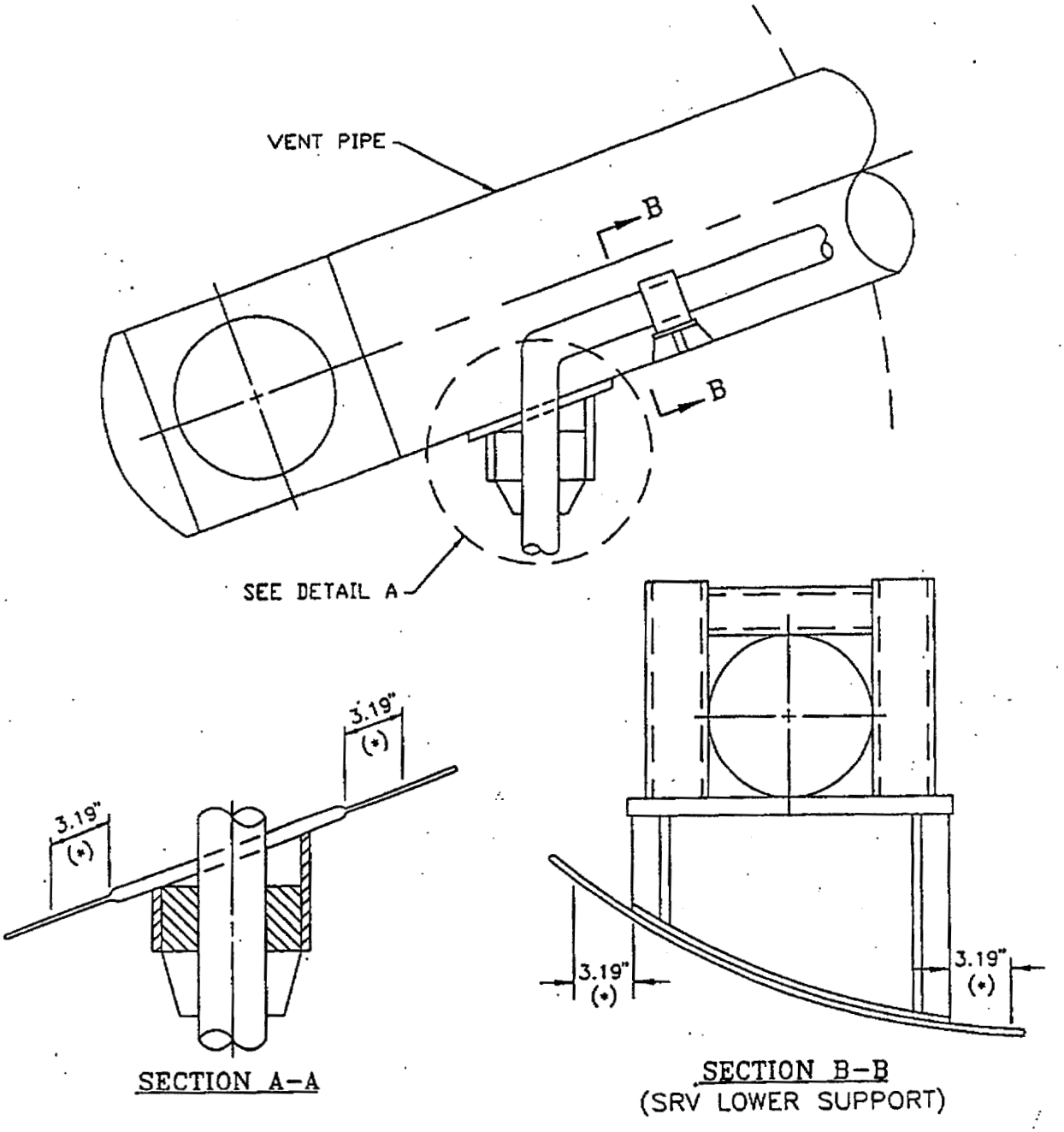

NOTE:
1. (*) LOCAL REGION
   ($1.0\sqrt{RT}$ = 3.19")

FIGURE 19

LOCAL SHELL REGIONS
VENT PIPE/SRV LINES A THRU D PENETRATION
VERMONT YANKEE NUCLEAR STATION

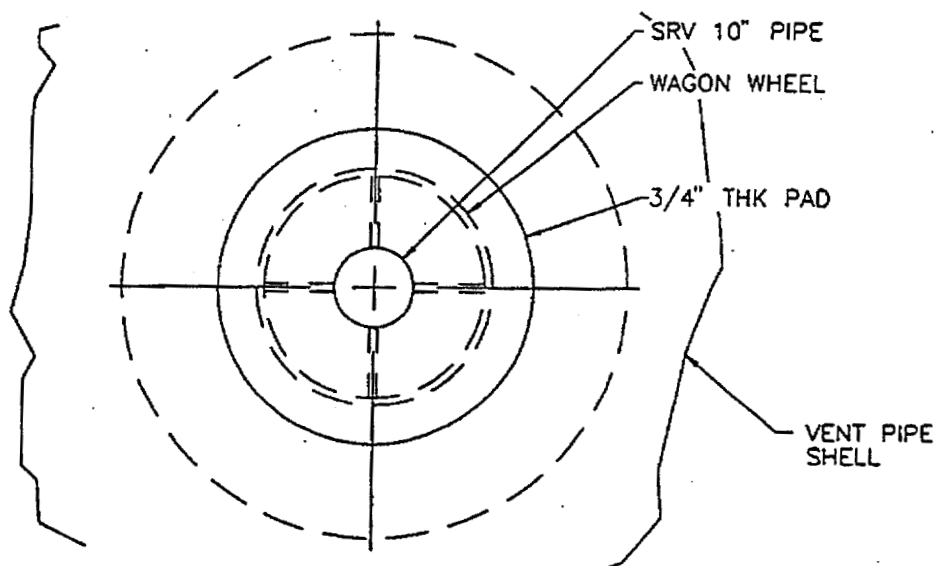

PLAN VIEW

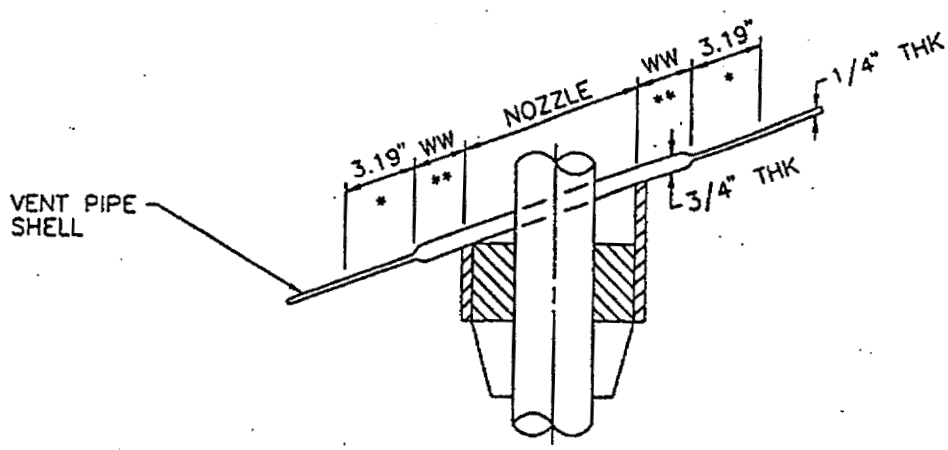

SECTION A–A

NOTE:

1. (*) VENT PIPE SHELL LOCAL REGION ($1.0\sqrt{RT}$ = 3.19")
2. (**) WAGON WHEEL LOCAL AREA

FIGURE 20

TELEDYNE ENGINEERING SERVICES

BY R.H.B. DATE 12-21-90
CHKD. BY RKE DATE 12-21-90

VERMONT YANKEE
SHELL THICKNESS REQUIREMENTS
CALCULATION PACKAGE 7426-1

SHEET NO. 42 OF 46
PROJ. NO. 7426

PERMISSIBLE SIZE RANGE FOR INDICATION VENT PIPE/SRV (A THRU D) AT NOZZLE INTERSECTION VERMONT YANKEE NUCLEAR STATION

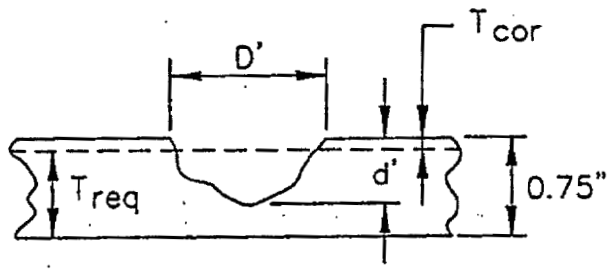

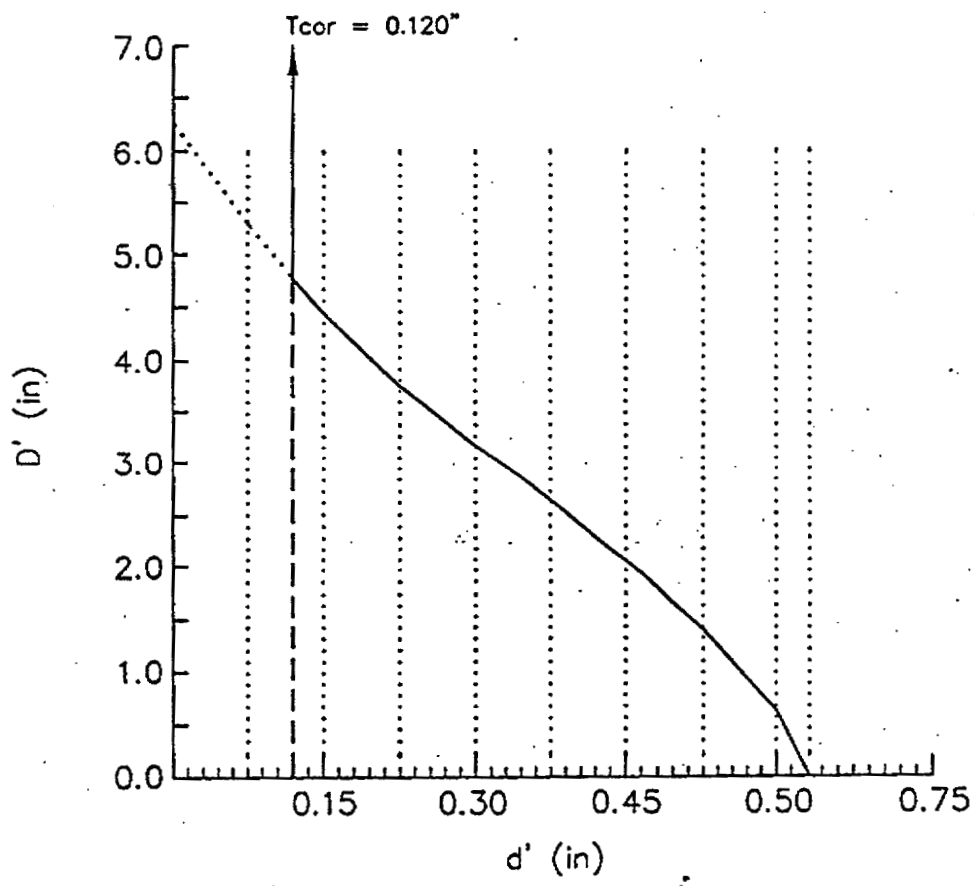

FIGURE 21

TELEDYNE ENGINEERING SERVICES

BY R.H.B. DATE 11-21-91 CHKD. BY RK DATE 11-21-91	VERMONT YANKEE SHELL THICKNESS REQUIREMENTS CALCULATION PACKAGE 7426-1	SHEET NO. 43 OF 46 PROJ. NO. 7426 Revision 1

PERMISSIBLE SIZE RANGE FOR INDICATION VENT PIPE/SRV (A THRU D) AT EDGE OF WAGON WHEEL VERMONT YANKEE NUCLEAR STATION

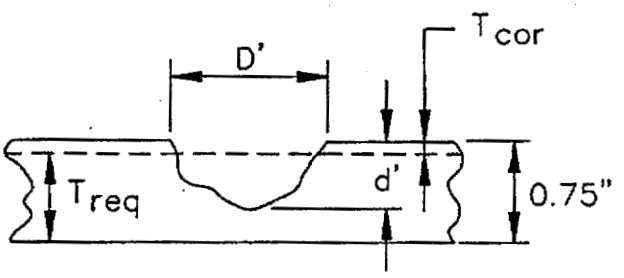

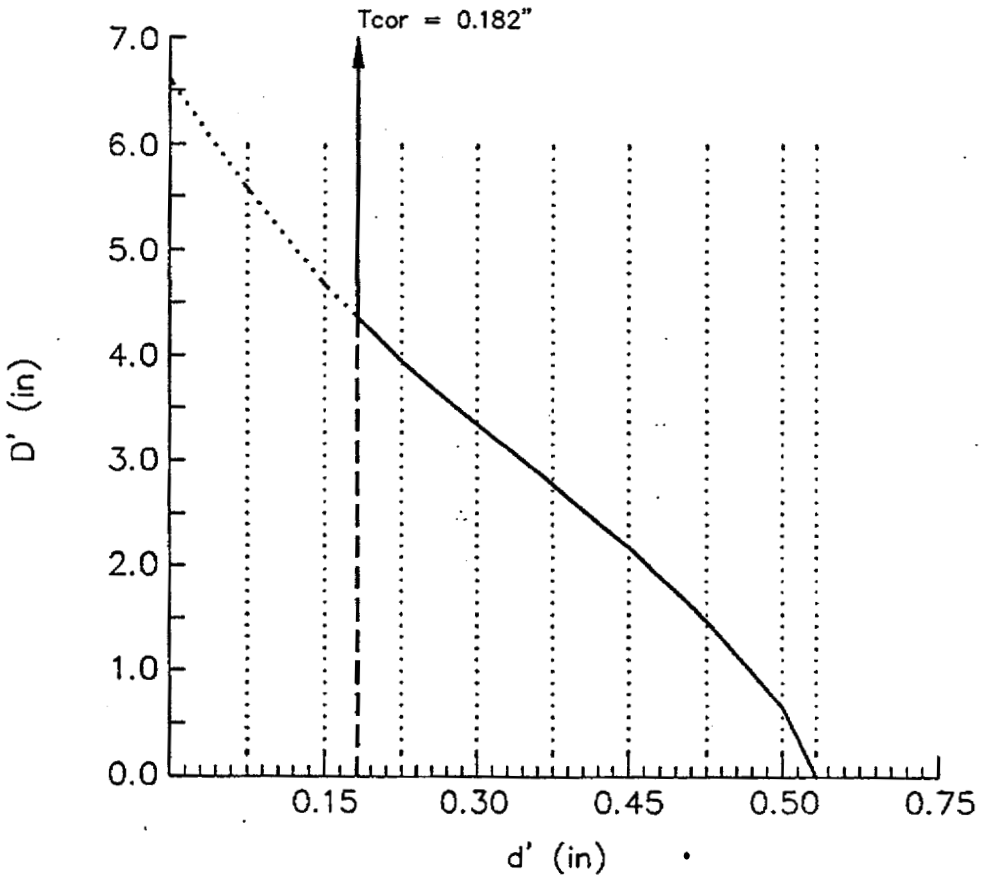

FIGURE 22

PERMISSIBLE SIZE RANGE FOR INDICATION 1/4" THICK VENT PIPE/SRV (A THRU D) AT EDGE OF 3/4" PAD VERMONT YANKEE NUCLEAR STATION

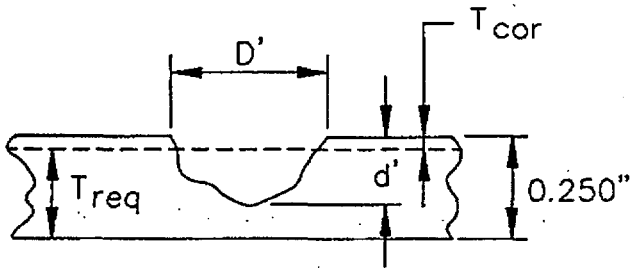

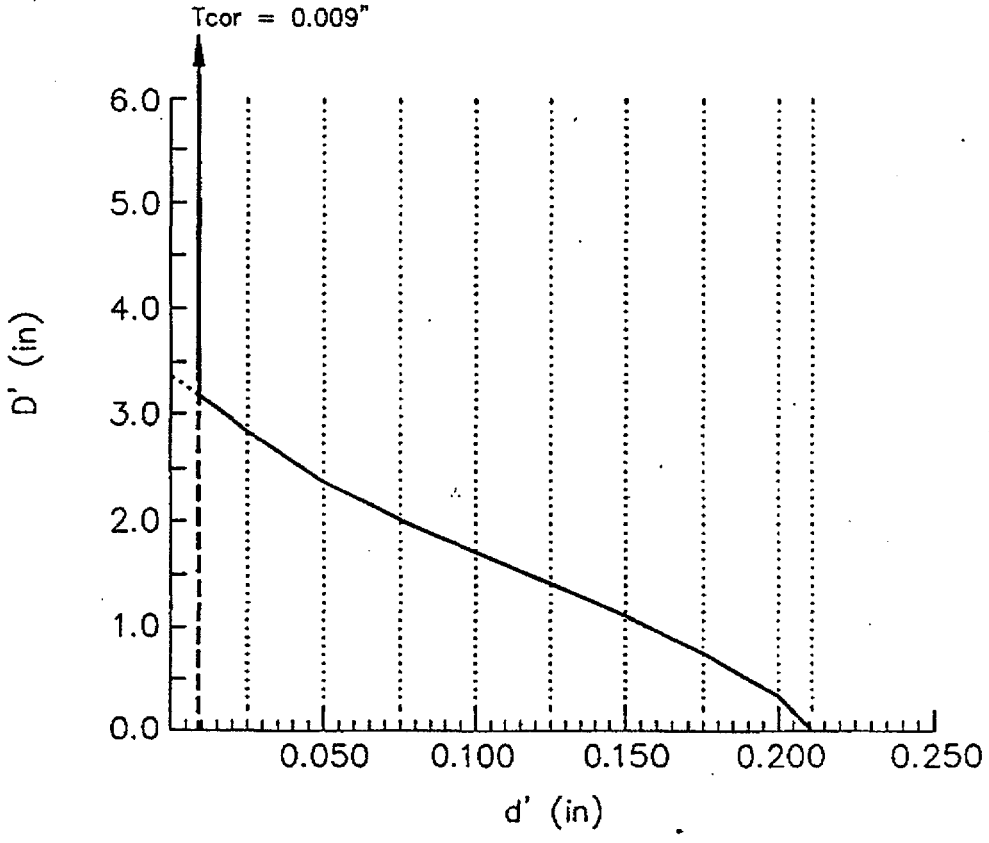

FIGURE 23

LOCAL SHELL REGIONS
VENT PIPE/SRV LINES (A THRU D) LOWER SUPPORT ATTACH'T
VERMONT YANKEE NUCLEAR STATION

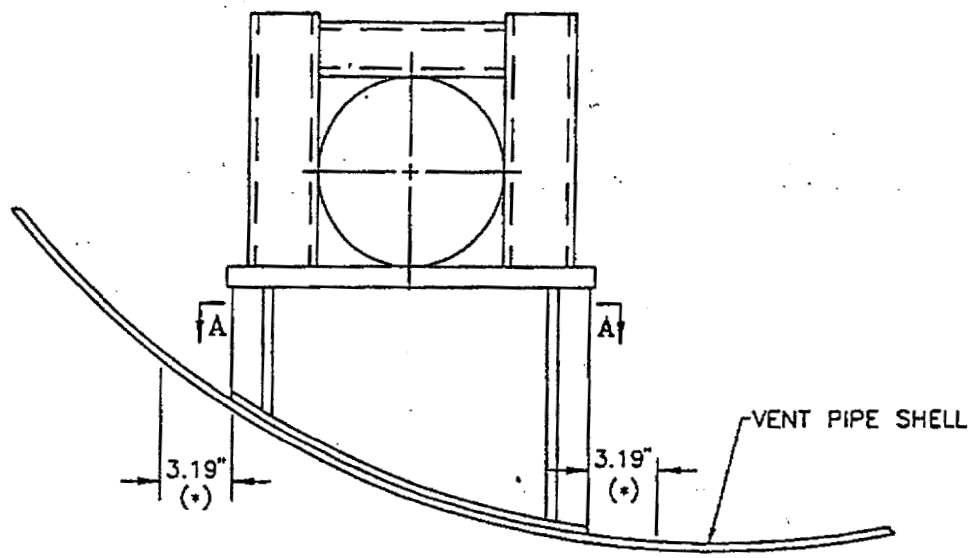

SRV LINE LOWER SUPPORT

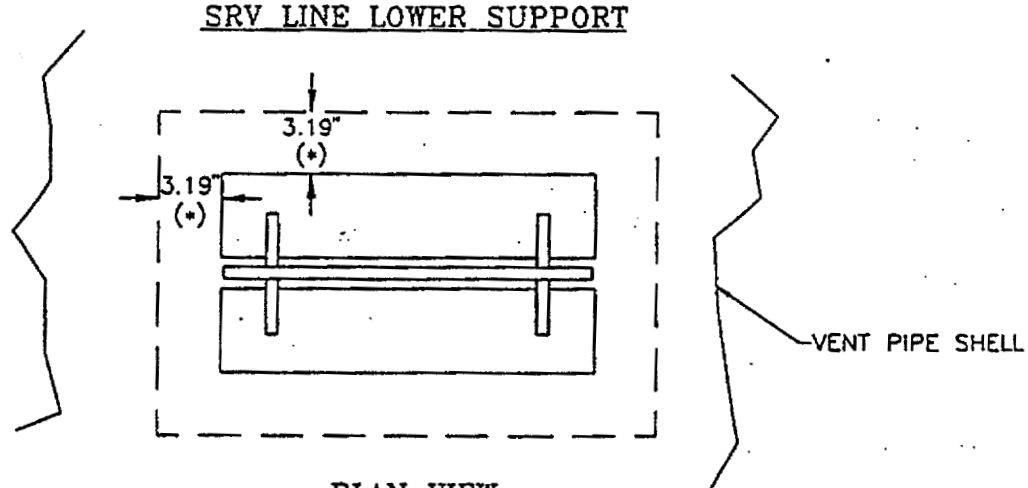

PLAN VIEW
SECTION A–A

NOTE:

1. (*) LOCAL REGION ($1.0\sqrt{RT} = 3.19"$)

FIGURE 24

TELEDYNE ENGINEERING SERVICES

BY R.H.B. DATE 12-21-90
CHKD. BY RAE DATE 12-21-90

VERMONT YANKEE
SHELL THICKNESS REQUIREMENTS
CALCULATION PACKAGE 7426-1

SHEET NO. 46 OF 46
PROJ. NO. 7426

PERMISSIBLE SIZE RANGE FOR INDICATION VENT PIPE/SRV (A THRU D) LOWER SUPPORT ATTACH'T VERMONT YANKEE NUCLEAR STATION

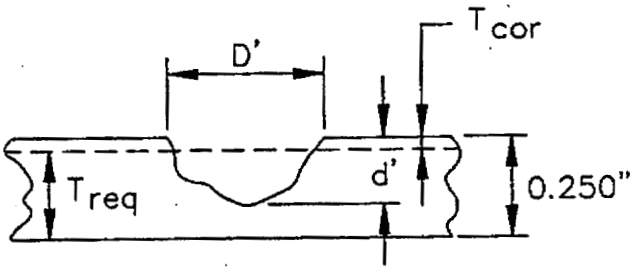

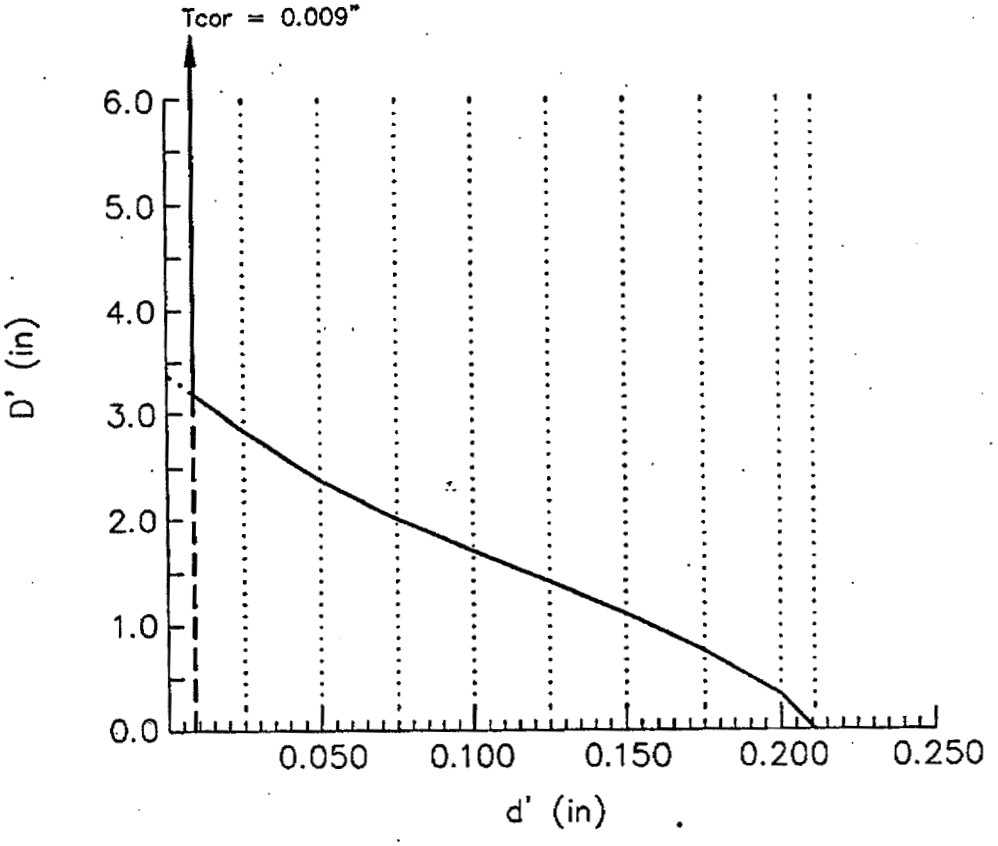

FIGURE 25

APPENDIX A

TORUS AND VENT SYSTEM REQUIRED SHELL THICKNESS CALCULATIONS

The calculations herein were performed using the Mark I Analysis of Record for Vermont Yankee. The minimum thickness requirements are based on the analyzed state of stress for the postulated Mark I event combinations.

VYC-1032 ATTACHMENT B

APPENDIX A.1

TORUS SHELL THICKNESS CALCULATIONS

TORUS FREE SHELL REGION, PRIMARY MEMBRANE STRESS INTENSITIES AND RESULTANT THICKNESS REQUIREMENTS (FILE NAME: VYMB.MCD) PAGE 1

The event combinations considered with respect to the Torus Shell thickness requirements are:

* 14 & 15 The two bounding SBA/IBA cases which are Level B and C respectively.
* 16 The 0δP Pool Swell Case which is Level D.
* 18 & 25 The two bounding DBA δP Pool Swell Cases which are Level B and C respectively.
* 20 & 21 The two bounding DBA CO Cases which are Level B and C respectively.

List primary membrane stress intensities (PM) for midbay elements

E := 0 ..8

Element := E	PM14 := E	PM15 := E	PM16 := E	PM18 := E	PM20 := E	PM21 := E	PM25 := E
11	8111	8184	3035	2052	8550	8626	2541
13	8908	9012	5314	2917	10628	10733	3625
15	9977	10058	7815	4558	11883	11966	5585
17	10628	10691	9261	4785	12957	13021	6054
19	10583	10635	4329	5296	11870	11923	6711
21	10568	10638	5708	4803	11639	11709	6169
23	9321	9421	6378	3764	10094	10195	4804
25	8409	8568	5800	2767	8886	9048	3390
27	7647	7795	4086	1753	7796	7947	2434

Minimum Torus Shell Thickness (T,in): T := .584

Event Combination PM Allowable Stress (S,psi):

		Allowable	Level
S14 :=	19300	Smc	B
S15 :=	38000	Sy	C
S16 :=	39372	Sf	D
S18 :=	19300	Smc	B
S20 :=	19300	Smc	B
S21 :=	38000	Sy	C
S25 :=	38000	Sy	C

TORUS FREE SHELL REGION, PRIMARY MEMBRANE STRESS INTENSITIES AND RESULTANT THICKNESS REQUIREMENTS (FILE NAME: VYMB.MCD) PAGE 2

Determine the minimum thickness (Tmin,in) for each primary membrane stress intensity (PM) at each element:

$$Tmin14_E := \frac{PM14_E \cdot T}{S14} \qquad Tmin15_E := \frac{PM15_E \cdot T}{S15} \qquad Tmin16_E := \frac{PM16_E \cdot T}{S16}$$

$$Tmin18_E := \frac{PM18_E \cdot T}{S18} \qquad Tmin20_E := \frac{PM20_E \cdot T}{S20} \qquad Tmin21_E := \frac{PM21_E \cdot T}{S21}$$

$$Tmin25_E := \frac{PM25_E \cdot T}{S25}$$

Element$_E$	Tmin14$_E$	Tmin15$_E$	Tmin16$_E$	Tmin18$_E$	Tmin20$_E$	Tmin21$_E$	Tmin25$_E$
11	0.245	0.126	0.045	0.062	0.259	0.133	0.039
13	0.27	0.139	0.079	0.088	0.322	0.165	0.056
15	0.302	0.155	0.116	0.138	0.36	0.184	0.086
17	0.322	0.164	0.137	0.145	0.392	0.2	0.093
19	0.32	0.163	0.064	0.16	0.359	0.183	0.103
21	0.32	0.163	0.085	0.145	0.352	0.18	0.095
23	0.282	0.145	0.095	0.114	0.305	0.157	0.074
25	0.254	0.132	0.086	0.084	0.269	0.139	0.052
27	0.231	0.12	0.061	0.053	0.236	0.122	0.037

Determine the maximum required thickness (Treq,in) and the remaining thickness available for corrosion (Tcor,in), for each element:

$$Treq_E := if\left[Tmin14_E > Tmin15_E, Tmin14_E, Tmin15_E\right]$$

$$Treq_E := if\left[Treq_E > Tmin16_E, Treq_E, Tmin16_E\right]$$

$$Treq_E := if\left[Treq_E > Tmin18_E, Treq_E, Tmin18_E\right]$$

$$Treq_E := if\left[Treq_E > Tmin20_E, Treq_E, Tmin20_E\right]$$

$$Treq_E := if\left[Treq_E > Tmin21_E, Treq_E, Tmin21_E\right]$$

$$Treq_E := if\left[Treq_E > Tmin25_E, Treq_E, Tmin25_E\right] \qquad Tcor_E := T - Treq_E$$

TORUS FREE SHELL REGION, PRIMARY MEMBRANE STRESS INTENSITIES AND RESULTANT THICKNESS REQUIREMENTS (FILE NAME: VYMB.MCD) PAGE 3

Determine the maximum stress per Element (PMmax,psi):

$$PMmax_E := if\left[Treq_E = Tmin14_E, PM14_E, 0\right]$$

$$PMmax_E := if\left[Treq_E = Tmin15_E, PM15_E, PMmax_E\right]$$

$$PMmax_E := if\left[Treq_E = Tmin16_E, PM16_E, PMmax_E\right]$$

$$PMmax_E := if\left[Treq_E = Tmin18_E, PM18_E, PMmax_E\right]$$

$$PMmax_E := if\left[Treq_E = Tmin20_E, PM20_E, PMmax_E\right]$$

$$PMmax_E := if\left[Treq_E = Tmin21_E, PM21_E, PMmax_E\right]$$

$$PMmax_E := if\left[Treq_E = Tmin25_E, PM25_E, PMmax_E\right]$$

Element E	Treq E	Tcor E	PMmax E
11	0.259	0.325	8550
13	0.322	0.262	10628
15	0.36	0.224	11883
17	0.392	0.192	12957
19	0.359	0.225	11870
21	0.352	0.232	11639
23	0.305	0.279	10094
25	0.269	0.315	8886
27	0.236	0.348	7796

TELEDYNE ENGINEERING SERVICES

BY MEK DATE 12-4-90
CHKD. BY RKE DATE 12-10-90

VERMONT YANKEE
SHELL THICKNESS REQUIREMENTS
CALCULATION PACKAGE 7426 - 1

SHEET NO. A-6 OF 19
PROJ. NO. 7426

TORUS FREE SHELL REGION, PRIMARY MEMBRANE STRESS INTENSITIES AND RESULTANT THICKNESS REQUIREMENTS (FILE NAME: VYMB.MCD)

Maximum and Minimum Values of Tcor:

MinTcor := min(Tcor) MinTcor = 0.192

MaxTcor := max(Tcor) MaxTcor = 0.348

Corrosion thickness (Tcor,in) VS Element

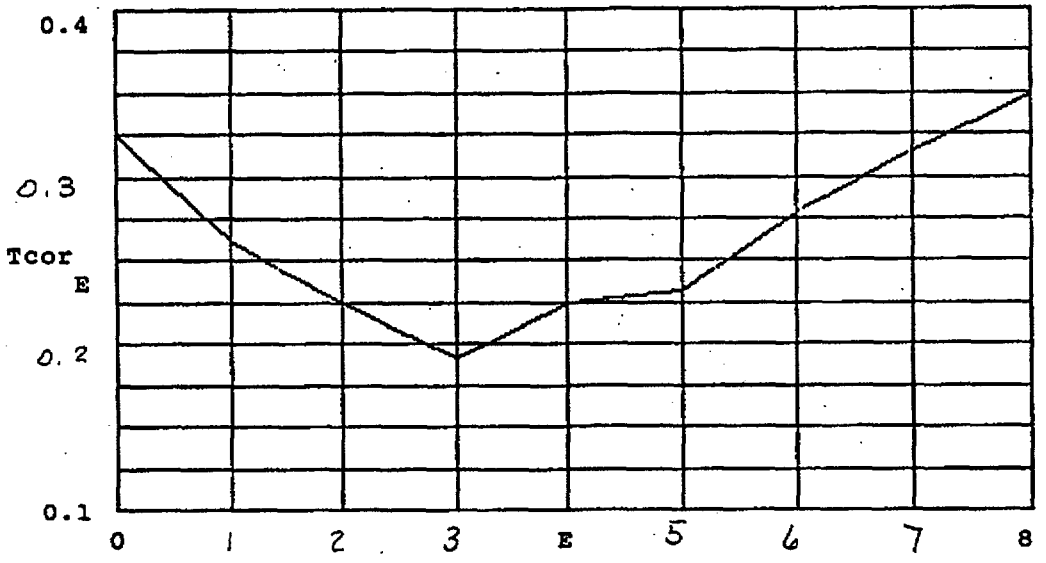

References:

(2) 1. TES Calc. Pkg. ID 5319-20, Rev. 1, "Vermont Yankee Torus Shell Analysis" & DISTRES Computer Output, Seq. No. A30TBRQ.

(6) 2. Mark I Containment Program, Structural Acceptance Criteria, Plant Unique Analysis Application Guide, Document No. NEDO-24583-1, October 1979.

(4) 3. ASME Boiler and Pressure Vessel Code, Section III, Division 1, Subsection NE, Class MC Vessels, 1974 Edition Through Summer 1977 Addenda.

(3) 4. TES Technical Report TR-5319-1, Rev. 2, Mark I Plant Unique Analysis for Vermont Yankee, Nov. 30, 1983.

TORUS RING GIRDER REGION, PRIMARY LOCAL MEMBRANE STRESS INTENSITIES AND RESULTANT THICKNESS REQUIREMENTS (FILE NAME: VYRG1.MCD) PAGE 1
BOTTOM OF SHELL
The event combinations considered with respect to the Torus Shell thickness requirements are:

* 14 & 15 The two bounding SBA/IBA cases which are Level B and C respectively.
* 16 The 0δP Pool Swell Case which is Level D.
* 18 & 25 The two bounding DBA δP Pool Swell Cases which are Level B and C respectively.
* 20 & 21 The two bounding DBA CO Cases which are Level B and C respectively.

List primary local membrane stress intensities (PL) for ring girder element

E := 0 ..7

Element := E	PL14 := E	PL15 := E	PL16 := E	PL18 := E	PL20 := E	PL21 := E	PL25 := E
114	6138	6340	11758	5541	8952	9231	6668
120	4757	4969	8912	4755	7314	7514	6262
126	5543	5584	9238	4687	7488	7557	6093
132	4212	4296	3965	1960	6656	6831	2731
141	5162	5241	5073	2814	5609	5765	3896
147	5124	5237	6580	3516	7430	7614	4798
153	5146	5285	7790	3851	6162	6305	5014
159	6570	6755	12583	6205	7458	7672	7452

Minimum Torus Shell Thickness (T,in): T := .584

Event Combination PL Allowable Stress (S,psi):

		Allowable	Level
S14 :=	19300	Smc	B
S15 :=	38000	Sy	C
S16 :=	39372	Sf	D
S18 :=	19300	Smc	B
S20 :=	19300	Smc	B
S21 :=	38000	Sy	C
S25 :=	38000	Sy	C

TELEDYNE ENGINEERING SERVICES

BY MEK DATE 12-4-90
CHKD. BY RKE DATE 12-10-90

VERMONT YANKEE
SHELL THICKNESS REQUIREMENTS
CALCULATION PACKAGE 7426 - 1

SHEET NO. A-8 OF 19
PROJ. NO. 7426

TORUS RING GIRDER REGION, PRIMARY LOCAL MEMBRANE STRESS INTENSITIES AND RESULTANT THICKNESS REQUIREMENTS (FILE NAME: VYRG1.MCD) PAGE 2
BOTTOM OF SHELL

Determine the minimum thickness (Tmin,in) for each primary local membrane stress intensity (PL) at each element:

$$Tmin14_E := \frac{PL14_E \cdot T}{1.5 \cdot S14} \qquad Tmin15_E := \frac{PL15_E \cdot T}{1.5 \cdot S15} \qquad Tmin16_E := \frac{PL16_E \cdot T}{1.5 \cdot S16}$$

$$Tmin18_E := \frac{PL18_E \cdot T}{1.5 \cdot S18} \qquad Tmin20_E := \frac{PL20_E \cdot T}{1.5 \cdot S20} \qquad Tmin21_E := \frac{PL21_E \cdot T}{1.5 \cdot S21}$$

$$Tmin25_E := \frac{PL25_E \cdot T}{1.5 \cdot S25}$$

Element E	Tmin14 E	Tmin15 E	Tmin16 E	Tmin18 E	Tmin20 E	Tmin21 E	Tmin25 E
114	0.124	0.065	0.116	0.112	0.181	0.095	0.068
120	0.096	0.051	0.088	0.096	0.148	0.077	0.064
126	0.112	0.057	0.091	0.095	0.151	0.077	0.062
132	0.085	0.044	0.039	0.04	0.134	0.07	0.028
141	0.104	0.054	0.05	0.057	0.113	0.059	0.04
147	0.103	0.054	0.065	0.071	0.15	0.078	0.049
153	0.104	0.054	0.077	0.078	0.124	0.065	0.051
159	0.133	0.069	0.124	0.125	0.15	0.079	0.076

Determine the maximum required thickness (Treq,in) and the remaining thickness available for corrosion (Tcor,in), for each element:

$$Treq_E := if\left[Tmin14_E > Tmin15_E, Tmin14_E, Tmin15_E\right]$$

$$Treq_E := if\left[Treq_E > Tmin16_E, Treq_E, Tmin16_E\right]$$

$$Treq_E := if\left[Treq_E > Tmin18_E, Treq_E, Tmin18_E\right]$$

$$Treq_E := if\left[Treq_E > Tmin20_E, Treq_E, Tmin20_E\right]$$

$$Treq_E := if\left[Treq_E > Tmin21_E, Treq_E, Tmin21_E\right]$$

$$Treq_E := if\left[Treq_E > Tmin25_E, Treq_E, Tmin25_E\right] \qquad Tcor_E := T - Treq_E$$

TORUS RING GIRDER REGION, PRIMARY LOCAL MEMBRANE STRESS INTENSITIES AND RESULTANT THICKNESS REQUIREMENTS (FILE NAME: VYRG1.MCD) PAGE 3
BOTTOM OF SHELL
Determine the maximum stress per Element (PLmax,psi):

VYC-1032 ATTACHMENT B

$$PLmax_E := if\left[Treq_E \approx Tmin14_E, PL14_E, 0\right]$$

$$PLmax_E := if\left[Treq_E \approx Tmin15_E, PL15_E, PLmax_E\right]$$

$$PLmax_E := if\left[Treq_E \approx Tmin16_E, PL16_E, PLmax_E\right]$$

$$PLmax_E := if\left[Treq_E \approx Tmin18_E, PL18_E, PLmax_E\right]$$

$$PLmax_E := if\left[Treq_E \approx Tmin20_E, PL20_E, PLmax_E\right]$$

$$PLmax_E := if\left[Treq_E \approx Tmin21_E, PL21_E, PLmax_E\right]$$

$$PLmax_E := if\left[Treq_E \approx Tmin25_E, PL25_E, PLmax_E\right]$$

Element $_E$	Treq $_E$	Tcor $_E$	PLmax $_E$
114	0.181	0.403	8952
120	0.148	0.436	7314
126	0.151	0.433	7488
132	0.134	0.45	6656
141	0.113	0.471	5609
147	0.15	0.434	7430
153	0.124	0.46	6162
159	0.15	0.434	7458

TORUS RING GIRDER REGION, PRIMARY LOCAL MEMBRANE STRESS INTENSITIES AND RESULTANT THICKNESS REQUIREMENTS (FILE NAME: VYRG1.MCD) PAGE 4
BOTTOM OF SHELL
Maximum and Minimum Values of Tcor:

MinTcor := min(Tcor) MinTcor = 0.403

MaxTcor := max(Tcor) MaxTcor = 0.471

Corrosion thickness (Tcor,in) VS Element

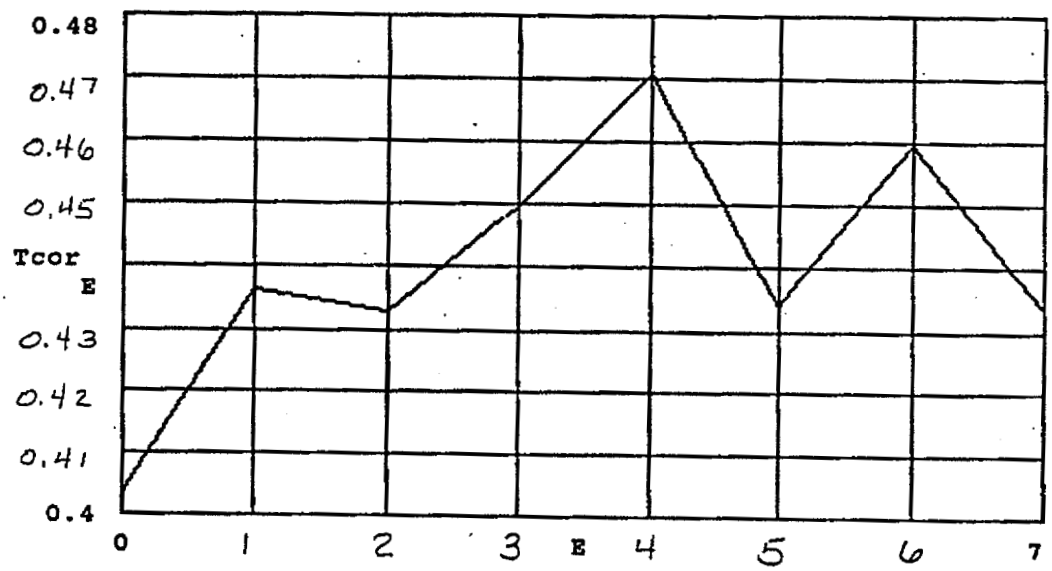

References:

(2) 1. TES Calc. Pkg. ID 5319-20, Rev. 1, "Vermont Yankee Torus Shell Analysis" & DISTRES Computer Output, Seq. No. A30TBRQ.

(6) 2. Mark I Containment Program, Structural Acceptance Criteria, Plant Unique Analysis Application Guide, Document No. NEDO-24583-1, October 1979.

(4) 3. ASME Boiler and Pressure Vessel Code, Section III, Division 1, Subsection NE, Class MC Vessels, 1974 Edition Through Summer 1977 Addenda.

(3) 4. TES Technical Report TR-5319-1, Rev. 2, Mark I Plant Unique Analysis for Vermont Yankee, Nov. 30, 1983.

VYC-1032 ATTACHMENT B

VERMONT YANKEE - TORUS SHELL

LONGITUDINAL LOCATION GUIDE FOR REMAINING THICKNESS

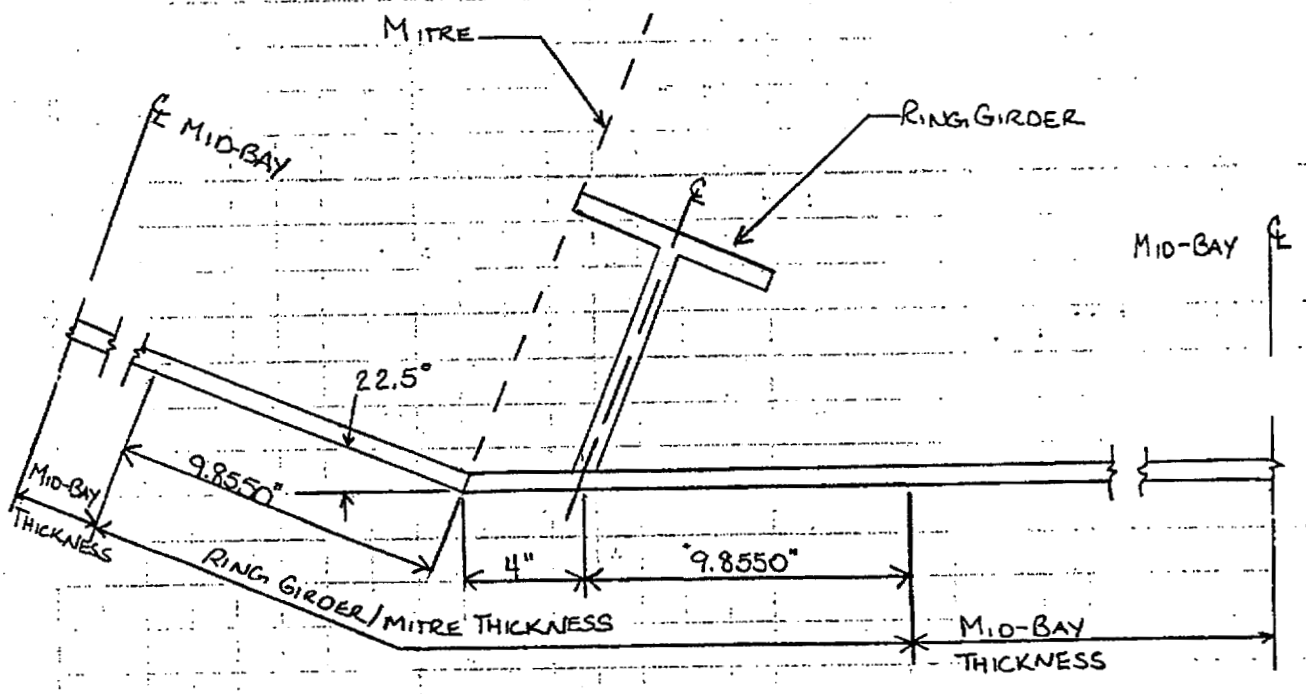

$$1.0\sqrt{RT} = 1.0\sqrt{(166.292)(0.584)} = 9.8550 \text{ inches}$$

REFERENCE: (17) CB&I DRAWING 200, REV. 1
(2) TES CALCULATION PACKAGE 5319-20

TELEDYNE ENGINEERING SERVICES

BY MEK DATE 12-4-90
CHKD. BY RME DATE 12-10-90

VERMONT YANKEE
SHELL THICKNESS REQUIREMENTS
CALCULATION PACKAGE 7426-1

SHEET NO. A-12 OF 19
PROJ. NO. 7426

VERMONT YANKEE TORUS SHELL
MID BAY CORROSION THICKNESS

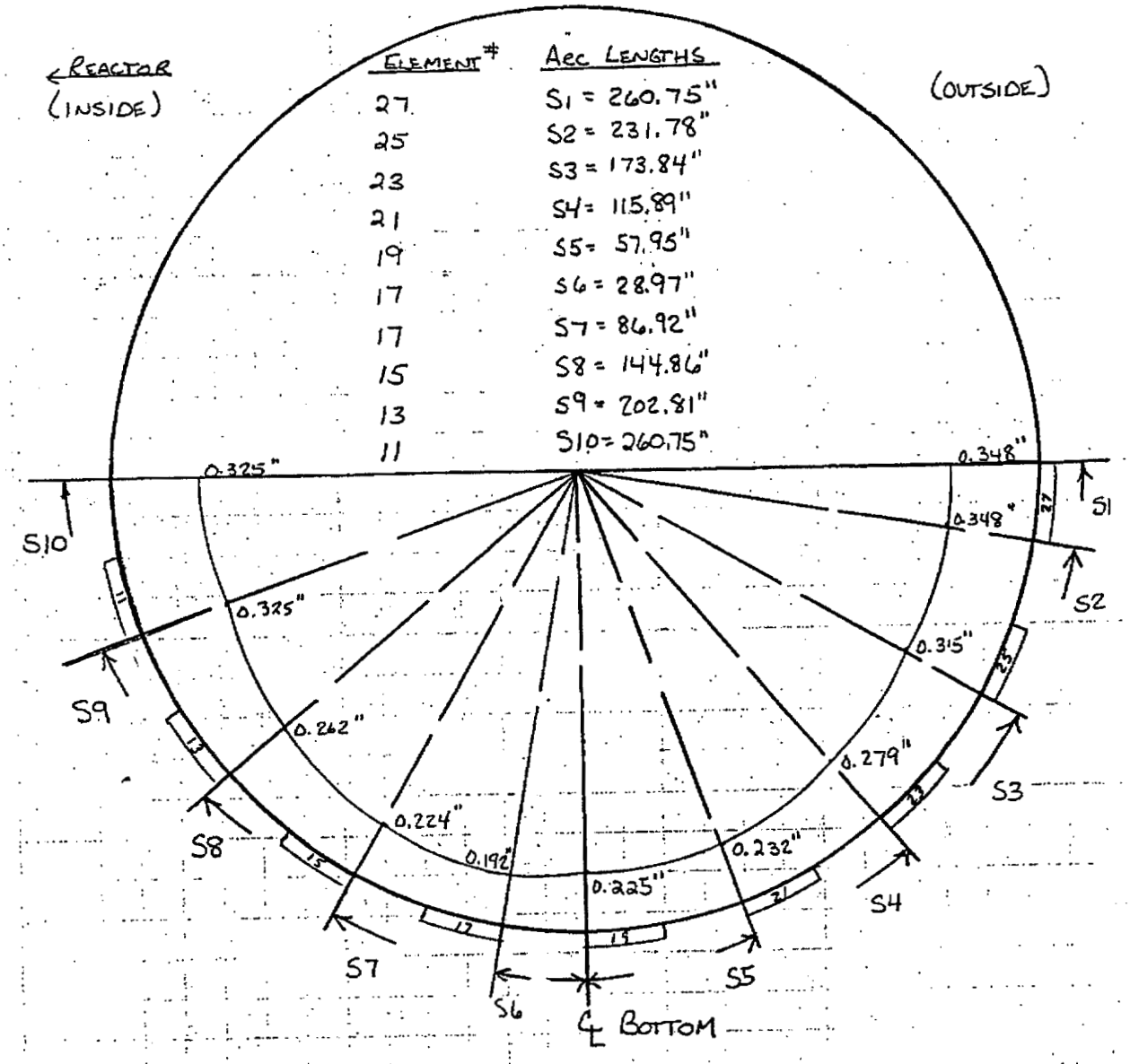

ELEMENT #	ARC LENGTHS
27	S1 = 260.75"
25	S2 = 231.78"
23	S3 = 173.84"
21	S4 = 115.89"
19	S5 = 57.95"
17	S6 = 28.97"
17	S7 = 86.92"
15	S8 = 144.86"
13	S9 = 202.81"
11	S10 = 260.75"

TELEDYNE ENGINEERING SERVICES

BY MEK DATE 12-7-90
CHKD. BY RJE DATE 12-10-90

VERMONT YANKEE
SHELL THICKNESS REQUIREMENTS
CALCULATION PACKAGE 7426-1

SHEET NO. A-13 OF 19
PROJ. NO. 74260

VERMONT YANKEE TORUS SHELL
RING GIRDER CORROSION THICKNESS

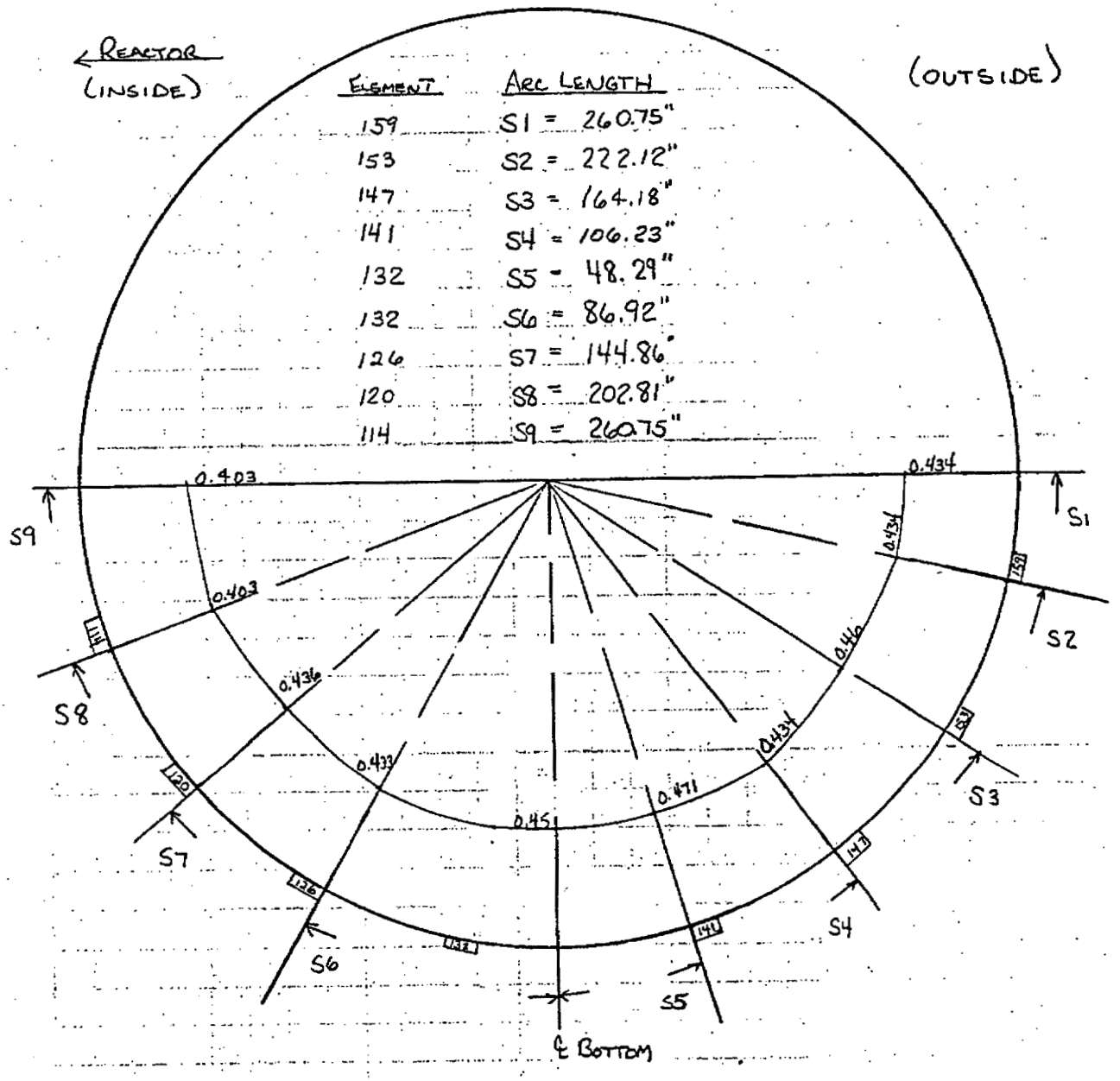

ELEMENT	ARC LENGTH
159	S1 = 260.75"
153	S2 = 222.12"
147	S3 = 164.18"
141	S4 = 106.23"
132	S5 = 48.29"
132	S6 = 86.92"
126	S7 = 144.86"
120	S8 = 202.81"
114	S9 = 260.75"

APPENDIX A.2

VENT SYSTEM THICKNESS CALCULATIONS

The vent system thickness calculations were performed using a similar methodology to that of the torus shell in A.1.

TELEDYNE ENGINEERING SERVICES

BY MEK DATE 12-17-90
CHKD. BY RK DATE 12-17-90

VERMONT YANKEE
SHELL THICKNESS REQUIREMENTS
CALCULATION PACKAGE 7426-1

SHEET NO. A-15 OF 19
PROJ. NO. 7426

VERMONT YANKEE VENT SYSTEM
VENT SYSTEM CONFIGURATION
(WITHOUT SRV LINES)

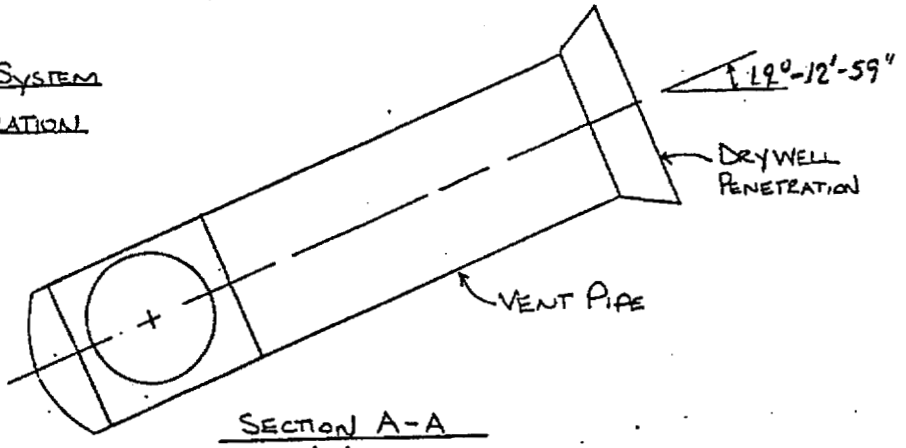

SECTION A-A

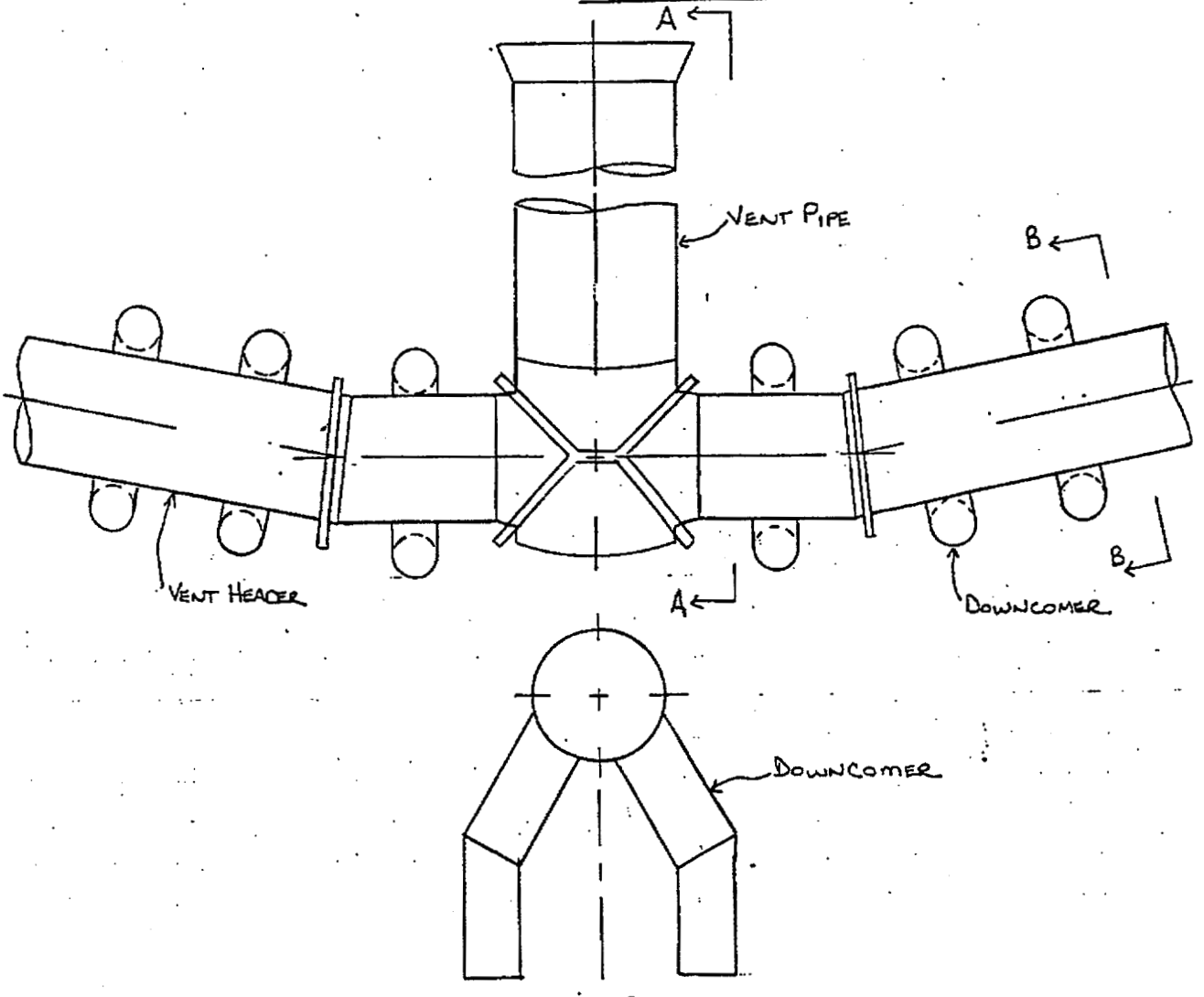

SECTION B-B

TELEDYNE ENGINEERING SERVICES

BY MEK DATE 12-13-90
CHKD. BY RKE DATE 12-18-90

VERMONT YANKEE
SHELL THICKNESS REQUIREMENTS
CALCULATION PACKAGE 7426-1

SHEET NO. A-16 OF 19
PROJ. NO. 7426

Component Location	Shell Thickness (in)	Controlling Event	Stress (psi)	Allowable (psi)	T_{req} (in)	T_{cor} (in)
** Vent Pipe	0.25	21	PM=12203 (10) pg 15	19300	0.158	0.092
Vent Header (Node 1)	0.25	19	PM=8568* (10) pg 26	19300	0.111	0.139
Downcomer	0.375	19	PM=12071 (10) pg 16	19300	0.235	0.140
Downcomer	0.25	19	PM=12071 (10) pg 16	19300	0.156	0.094
Vent Header At Mitre Joint [Node 350]	0.25	19	PL=27137 (10) pg 14	28950	0.234	0.016
Vent Header At Downcomer [F.E.M]	0.25	15	PL=36719 (11) pg 15	37635	0.244	0.006
Downcomer At Mitre Joint	0.375	19	PL=12071 (10) pg 16	28950	0.156	0.219
Downcomer At Mitre Joint	0.25	19	PL=12071 (10) pg 16	28950	0.104	0.146
Vent Pipe At Drywell [Node 200]	0.25	21	PL=12203 (10) pg 15	28950	0.105	0.145

* Stress Unintensified
** Conservatively Used Primary Local Stress (PL) For Primary Membrane Stress (PM).
( ) Reference And Page Number.

TELEDYNE ENGINEERING SERVICES

BY MEH DATE 12-18-90
CHKD. BY RJE DATE 12-18-90

VERMONT YANKEE
SHELL THICKNESS REQUIREMENTS
CALCULATION PACKAGE 7426-1

SHEET NO. A-17 OF 19
PROJ. NO. 7426

VENT PIPE/SRV LINES A,B,C,AND D

COMPONENT LOCATION	SHELL THICKNESS (IN)	CONTROLLING EVENT	STRESS (PSI)	ALLOWABLE (PSI)	Treq (IN)	Tcor (IN)
VENT PIPE/SRV (A,B,C,D) AT NOZZLE INTERSECTION (ELEMENT 71)	0.75	15	PL=24302 *	28950	0.630	0.120
VENT PIPE/SRV (A,B,C,D) AT WAGON WHEEL (ELEMENT 35)	0.75	15	PL=21932 *	28950	0.568	0.182
VENT PIPE/SRV (A,B,C,D) AT EDGE OF 3/4" THK PAD (ELEMENT 7)	0.25	15	PL=27922 (16) pg 64	28950	0.241	0.009
VENT PIPE/SRV (A,B,C,D) AT LOWER SUPPORT	0.25	15	PL=27886 (16) pg 99	28950	0.241	0.009

( ) REFERENCE AND PAGE NUMBER

* SEE FOLLOWING PAGES FOR STRESS EVALUATION OF ELEMENTS 35 AND 71. REFERENCE (16), TES CALC. PACKAGE 5319-28, "SRV-VENT PIPE PENETRATION STRESS EVALUATION - VERMONT YANKEE - SRV LINES A-D," AND COMPUTER SEQUENCES: HX31E73, HX31BN7, HX31BOZ, HX32GT3.

TELEDYNE ENGINEERING SERVICES

BY MEK DATE 12-14-90
CHKD. BY RK DATE 12-18-90

VERMONT YANKEE
SHELL THICKNESS REQUIREMENTS
CALCULATION PACKAGE 7426-1

SHEET NO. A-18 OF 19
PROJ. NO. 7426

VERMONT YANKEE - STRESS EVALUATION

ELEMENT # 71

	STRESSES / LOAD CASE	STRESS (+Z FACE)			STRESS (-Z FACE		
		σ_x	σ_y	τ_{xy}	σ_x	σ_y	τ_{xy}
	F_x	300.6	-292.4	604.6	3700	-171.0	450.6
	F_y, M_x, M_z	-1926	-3925	1214	9071	8102	-2698
	F_z	1407	402.9	-103.5	1551	466.2	-123.2
	M_y	928.2	1608	-1520	-161.3	514.5	-1920
	VENT END LOAD (LOAD CASE 16)	2361	766.4	-307.4	2188	694.0	-302.0
FACTOR		σ_x	σ_y	τ_{xy}	σ_x	σ_y	τ_{xy}
0.888	F_x	266.9	-259.7	536.9	328.6	-151.8	400.1
0.878	F_y, M_x, M_z	-1691	-3446	1066	7964	7114	-2369
1.054	F_z	1483	424.7	-109.1	1635	491.4	-129.9
0.983	M_y	912.4	1581	-1494	-158.6	505.8	-1887
0.736	VENT END LOAD (LOAD CASE 16)	1738	564.1	-226.2	1610	510.8	-222.3
TOTAL		2709.3	-1135.9	-226.4	11379	8470.2	-4208.1

PRINCIPLE STRESS +Z FACE : $\sigma_1 = 2722$ psi
$\sigma_2 = -1149$ psi
$\sigma_3 = 0.0$

PRINCIPLE STRESS -Z FACE : $\sigma_1 = 14377$ psi
$\sigma_2 = -9925$ psi
$\sigma_3 = 0.0$

MAXIMUM PRINCIPLE STRESS $= \sigma_1 - \sigma_2 = 24302$ psi $< 1.5\,S_{mc}$
(28,950 psi)

TELEDYNE ENGINEERING SERVICES

BY MEK DATE 12-14-90
CHKD. BY RAE DATE 12-18-90

VERMONT YANKEE
SHELL THICKNESS REQUIREMENTS
CALCULATION PACKAGE 7426-1

SHEET NO. A-19 OF 19
PROJ. NO. 7426

VERMONT YANKEE – STRESS EVALUATION

ELEMENT #35

	Stresses / Load Case	Stress (+Z Face)			Stress (-Z Face)		
		σ_x	σ_y	τ_{xy}	σ_x	σ_y	τ_{xy}
	F_x	575.4	399.6	-258.3	358.4	-308.0	-253.8
	F_y, M_x, M_z	18170	16070	3925	4080	-18230	-70.32
	F_z	1384	3656	138.9	1116	-710.1	8.392
	M_y	-1825	-1677	94.91	-269.8	1873	-159.4
	Vent End Load (Load Case 16)	2188	-325.0	74.96	2365	-246.1	9332
Factor		σ_x	σ_y	τ_{xy}	σ_x	σ_y	τ_{xy}
0.888	F_x	511.0	354.8	-229.4	318.3	-273.5	-225.4
0.878	F_y, M_x, M_z	15953	14109	3446	3582	-16006	-61.74
1.054	F_z	1459	385.3	146.4	1176	-748.4	8.845
0.983	M_y	-1794	-1648	93.30	-265.2	1841	-156.7
0.736	Vent End Load	1610	-239.2	55.17	1741	-181.1	68.68
Total		17739	12961.9	3511.47	6552.1	-15368	-366.315

Principle Stress +Z Face: $\sigma_1 = 19,597$ psi
$\sigma_2 = 11,104$ psi
$\sigma_3 = 0.0$

Principle Stress -Z Face: $\sigma_1 = 6558$ psi
$\sigma_2 = -15374$ psi
$\sigma_3 = 0.0$

Maximum Principle Stress $= \sigma_1 - \sigma_2 = 21,932$ psi $< 1.5\, S_{mc}$ (28,950 psi)

APPENDIX B

PERMISSIBLE INDICATION SIZE CALCULATIONS

The general calculations contained in this appendix consider the discontinuity effects resulting from a localized indication to determine the range of permissible indication sizes in the presence of general membrane stresses for Class MC pressure vessel.

B.1 and B.2 use the general results to specifically address the torus shell and vent system range of permissible indication sizes.

TELEDYNE ENGINEERING SERVICES

BY [illegible] DATE 790424
CHKD. BY GM DATE 4-27-79

VERMONT YANKEE
SHELL THICKNESS REQUIREMENTS
CALCULATION PACKAGE 7426-1

SHEET NO. B-2 OF 42
PROJ. NO. 7426

Consider a large circular plate of thickness T_o subject to a uniform membrane stress σ_o which may be less than or equal to the allowable general membrane stress S_m. Let the plate contain a cylindrical depression of diameter D and depth d. How may D and d be varied without exceeding the limits on local membrane stress intensity or on local membrane plus primary bending stress intensity, both of which are $1.5S_m$. In considering primary bending, the effects of a lateral pressure P_o will have to be considered.

$D = 2R$

$t = T_o - d$

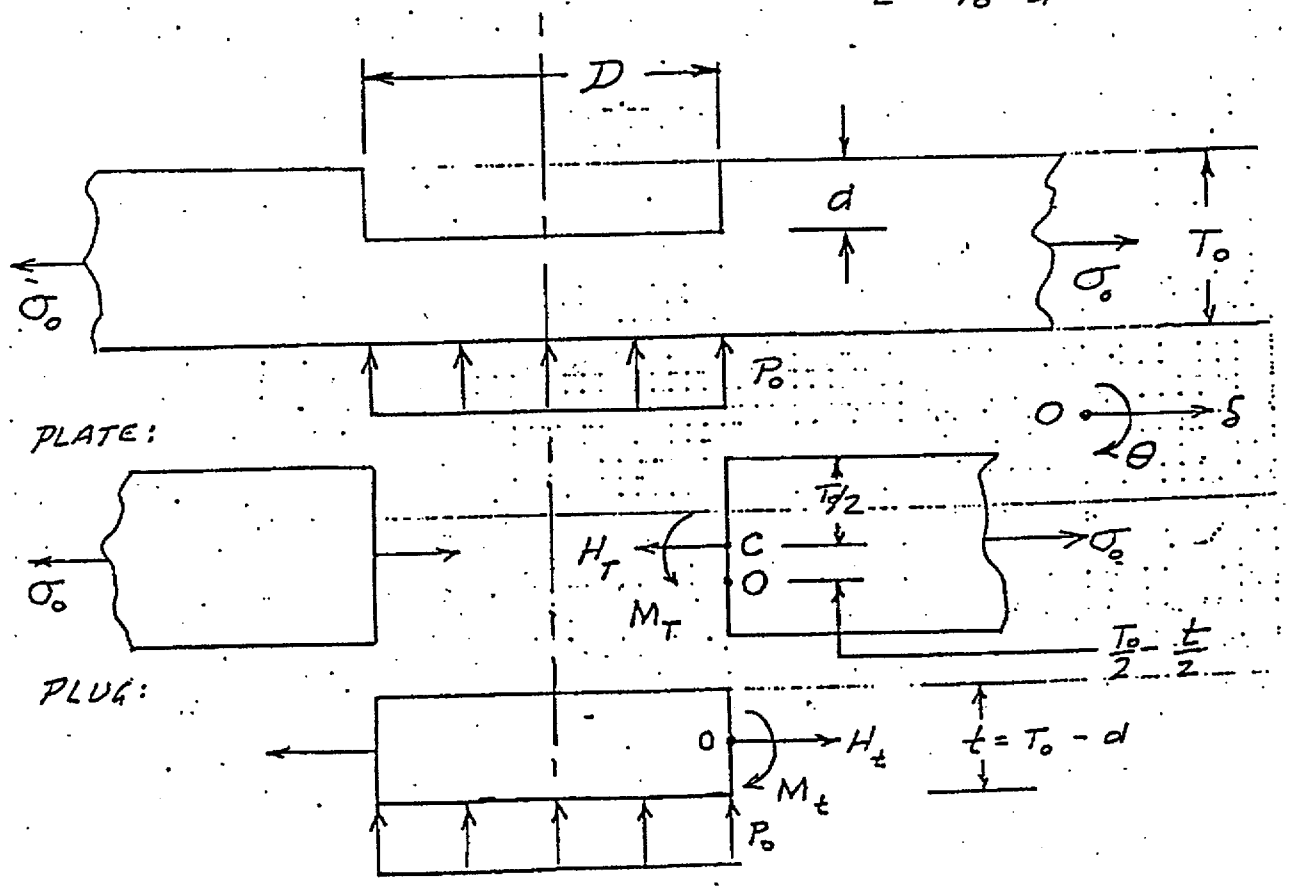

TELEDYNE ENGINEERING SERVICES

BY 266 DATE 790424
CHKD. BY GM DATE 4-27-79

VERMONT YANKEE
SHELL THICKNESS REQUIREMENTS
CALCULATION PACKAGE 7426-1

SHEET NO. B-3 OF 42
PROJ. NO. 7426

Primary bending stress in plug:

Maximum at center, tensile on top

$$S_p = \frac{3(3+\nu)R^2 P_o}{8t^2}$$ (Timoshenko, Plates & Shells, Eq. (71)) (1)

Plug deformation

$$\delta_{ot} = \frac{(1-\nu)RH_t}{Et}$$ (2)

$$\theta_{ot} = \frac{12(1-\nu)RM_t}{Et^3} + \frac{3(1-\nu)R^3P_o}{2Et^3}$$ (Roark) (3)

Plate deformation

$$\delta_{CT} = R\,\varepsilon_{\theta R}$$

$\varepsilon_{\theta R}$ = hoop strain at radius R

$$= \frac{1}{E}\left[\sigma_\theta - \nu\,\sigma_r\right]$$

For an internal pressure p_i and an external pressure p_o; and an internal radius "a" and external radius "b"; and evaluating at radius a

$$\sigma_\theta = -\frac{a^2b^2(p_o-p_i)}{b^2-a^2}\left(\frac{1}{a}\right)^2 + \frac{p_i a^2 - p_o b^2}{b^2-a^2}$$ (Timoshenko, Pl. & Shells, Eq. (48))

divide by b^2, let $b^2 \to \infty$

$$\sigma_\theta = -(p_o - p_i) - p_o = -2p_o + p_i$$

so that

$$\sigma_\theta = 2\sigma_o - \frac{H_T}{T_o}$$

$$\sigma_r = \frac{H_T}{T_o}$$

and

$$\delta_{CT} = \frac{R}{E}\left[2\sigma_o - \frac{H_T}{T_o} - \nu\frac{H_T}{T_o}\right]$$

or

$$\delta_{CT} = \frac{R}{E}\left[2\sigma_o - (1+\nu)\frac{H_T}{T_o}\right] \qquad (4)$$

The rotation of a circular plate of radius a containing a hole of radius b and subject to a moment M_1 around the hole is evaluated at $r = b$

$$\frac{dw}{dr} = \frac{a^2 b^2 M_1}{D(1-\nu)(a^2-b^2)}\left[\frac{1}{b} + \frac{1-\nu}{1+\nu}\frac{b}{a^2}\right] \qquad \left(\begin{matrix}\text{Timo, P\&S}\\ \text{Eq. 72}\end{matrix}\right)$$

Dividing by a^2, let $a \to \infty$

$$\frac{dw}{dr} = \frac{b M_1}{D(1-\nu)} = \frac{12 b M_1 (1-\nu^2)}{E t^3 (1-\nu)} = \frac{12 b M_1}{E t^3}(1+\nu)$$

whence

$$\theta_{CT} = -\frac{12 R M_T}{E T_o^3}(1+\nu) \qquad (5)$$

The displacement and rotation at point O are related to those at point C as follows:

$$\theta_{OT} = \theta_{CT} \qquad (6)$$

$$\delta_{OT} = \delta_{CT} - \frac{1}{2}(T_o - t)\theta_{CT} \qquad (7)$$

Therefore:

$$\theta_{OT} = -\frac{12 R M_T}{E T_o^3}(1+\nu) \qquad (8)$$

and

TELEDYNE ENGINEERING SERVICES

BY ZM DATE 790424
CHKD. BY GM DATE 4-27-79

VERMONT YANKEE
SHELL THICKNESS REQUIREMENTS
CALCULATION PACKAGE 7426-1

SHEET NO. B-5 OF 42
PROJ. NO. 7426

$$\delta_{OT} = \frac{R}{E}\left[2\sigma_o - (1+\nu)\frac{H_T}{T_o}\right] - \frac{1}{2}(T_o - t)\left(-\frac{12 R M_T}{E T_o^3}\right)(1+\nu)$$

$$\delta_{OT} = \frac{R}{E}\left[2\sigma_o - (1+\nu)\frac{H_T}{T_o} + \frac{6(T_o - t)M_T}{T_o^3}(1+\nu)\right] \quad (9)$$

For equilibrium of internal forces and moments:

$$H_T = H_t \quad (10)$$

$$M_T = M_t - \frac{1}{2}(T_o - t)H_t \quad (11)$$

Substituting (10) and (11) in (8) and (9)

$$\theta_{OT} = -\frac{12 R}{E T_o^3}\left[M_t - \frac{1}{2}(T_o - t)H_t\right](1+\nu) \quad (12)$$

$$\delta_{OT} = \frac{R}{E}\left\{2\sigma_o - (1+\nu)\frac{H_t}{T_o} + \frac{6(T_o - t)}{T_o^3}\left[M_t - \frac{1}{2}(T_o - t)H_t\right](1+\nu)\right\}$$

$$= \frac{R}{E}\left\{2\sigma_o + \frac{6(1+\nu)(T_o - t)}{T_o^3}M_t - (1+\nu)\left[\frac{1}{T_o} + \frac{3(T_o - t)^2}{T_o^3}\right]H_t\right\}$$

$$\delta_{OT} = \frac{R}{E}\left\{2\sigma_o + \frac{6(1+\nu)(T_o - t)M_t}{T_o^3} - (1+\nu)\left[1 + \frac{3(T_o - t)^2}{T_o^2}\right]\frac{H_t}{T_o}\right\} \quad (13)$$

For compatability:

$$\delta_{Ot} = \delta_{OT} \quad (14)$$

$$\theta_{Ot} = \theta_{OT} \quad (15)$$

Substituting (2) and (13) in (14)

$$\frac{(1-\nu)R H_t}{Et} = \frac{R}{E}\left\{2\sigma_0 + \frac{6(1+\nu)(T_0-t)M_t}{T_0^3} - (1+\nu)\left[1+\frac{3(T_0-t)^2}{T_0^2}\right]\frac{H_t}{T_0}\right\} \tag{16}$$

$$\left[\frac{(1-\nu)}{t} + \frac{(1+\nu)}{T_0} + \frac{3(1+\nu)(T_0-t)^2}{T_0^3}\right]H_t - \frac{6(1+\nu)(T_0-t)}{T_0^3}M_t = 2\sigma_0$$

$$\left[(1-\nu) + (1+\nu)\left(\frac{t}{T_0}\right) + 3(1+\nu)\left(1-\frac{t}{T_0}\right)^2\left(\frac{t}{T_0}\right)\right]\frac{H_t}{t} - 6(1+\nu)\left(1-\frac{t}{T_0}\right)\left(\frac{t}{T_0}\right)^2\frac{M_t}{t^2} = 2\sigma_0$$

Let $t/T_0 = \tau$

$$\left[\frac{1-\nu}{1+\nu} + \tau + 3(1-\tau)^2\tau\right]\frac{H_t}{t} - 6(1-\tau)(\tau)^2\frac{M_t}{t^2} = \frac{2}{(1+\nu)}\sigma_0$$

$$\left[\frac{1-\nu}{1+\nu} + \tau + 3\tau - 6\tau^2 + 3\tau^3\right]\frac{H_t}{t} - 6(1-\tau)\tau^2\frac{M_t}{t^2} = \frac{2}{(1+\nu)}\sigma_0$$

$$\left[\frac{1-\nu}{1+\nu} + 4\tau - 6\tau^2 + 3\tau^3\right]\frac{H_t}{t} - 6(1-\tau)\tau^2\frac{M_t}{t^2} = \frac{2}{(1+\nu)}\sigma_0 \tag{17}$$

From which

$$\frac{M_t}{t^2} = \frac{\left[\left(\frac{1-\nu}{1+\nu}\right) + 4\tau - 6\tau^2 + 3\tau^3\right]\frac{H_t}{t} - \frac{2}{(1+\nu)}\sigma_0}{6(1-\tau)\tau^2} \tag{18}$$

TELEDYNE ENGINEERING SERVICES

BY [illegible] DATE 7-31-82
CHKD. BY GM DATE 4-27-82

VERMONT YANKEE
SHELL THICKNESS REQUIREMENTS
CALCULATION PACKAGE 7426-1

SHEET NO. B-7 OF 42
PROJ. NO. 7426

Subst (3) and (12) in (15)

$$\frac{12(1-\nu)RM_t}{Et^3} + \frac{3(1-\nu)R^3P_o}{2Et^3} = -\frac{12(1+\nu)R}{ET_o^3}\left[M_t - \frac{1}{2}(T_o - t)H_t\right]$$

$$-2\frac{(1+\nu)(T_o-t)}{T_o^3}H_t + 4\left[\frac{(1-\nu)}{t^3} + \frac{(1+\nu)}{T_o^3}\right]M_t = -\frac{(1-\nu)R^2P_o}{2t^3}$$

$$2(1+\nu)\left(1-\frac{t}{T_o}\right)\frac{H_t}{T_o^2} - 4\left[\frac{(1-\nu)}{t} + \frac{(1+\nu)t^2}{T_o^3}\right]\frac{M_t}{t^2} = +\frac{(1-\nu)}{2t}\left(\frac{R}{t}\right)^2P_o$$

$$2(1+\nu)\left(1-\frac{t}{T_o}\right)\left(\frac{t}{T_o}\right)^2\frac{H_t}{t} - 4\left[(1-\nu) + (1+\nu)\left(\frac{t}{T_o}\right)^3\right]\frac{M_t}{t^2} = \frac{(1-\nu)}{2}\left(\frac{R}{t}\right)^2P_o$$

Using (16)

$$-(1+\nu)(1-\tau)\tau^2\frac{H_t}{t} - 2\left[(1-\nu) + (1+\nu)\tau^3\right]\frac{M_t}{t^2} = \frac{(1-\nu)}{4}\left(\frac{R}{t}\right)^2P_o$$

$$(1-\tau)\tau^2\frac{H_t}{t} - 2\left[\frac{1-\nu}{1+\nu} + \tau^3\right]\frac{M_t}{t^2} = \frac{(1-\nu)}{4(1+\nu)}\left(\frac{R}{t}\right)^2P_o \qquad (19)$$

Subst. (18) in (19)

$$(1-\tau)\tau^2\frac{H_t}{t} - 2\left[\frac{1-\nu}{1+\nu} + \tau^3\right]\left\{\frac{\left[\left(\frac{1-\nu}{1+\nu}\right) + 4\tau - 6\tau^2 + 3\tau^3\right]\frac{H_t}{t} - \frac{2}{(1+\nu)}\sigma_o}{6(1-\tau)\tau^2}\right\} = \frac{(1-\nu)}{4(1+\nu)}\left(\frac{R}{t}\right)^2P_o$$

TELEDYNE ENGINEERING SERVICES

BY [illegible] DATE 7/04/2[illegible]
CHKD. BY GM DATE 4-27-79

VERMONT YANKEE
SHELL THICKNESS REQUIREMENTS
CALCULATION PACKAGE 7426-1

SHEET NO. B-8 OF 42
PROJ. NO. 7426

(20)

$$\frac{{}_{h}Z\left(\frac{r-1}{r+1}\right)+{}_{\varepsilon}Zh+{}_{z}Zq-{}_{s}Zh+\frac{r+1}{r-1}}{2\left[\frac{1}{{}_{\varepsilon}Z}+\frac{r+1}{r-1}\right]\sigma_o-\frac{3}{h}(1-Z)Z\left(\frac{P}{\alpha}\right)_z d_o} = \frac{H_7}{7}$$

$$= \left[{}_{h}Z\left(\frac{r-1}{r+1}\right)+{}_{\varepsilon}Zh+{}_{z}Zq-{}_{s}Zh+\frac{r+1}{r-1}\right](r-1)$$

$$= {}_{h}Z(r+1)+\left[{}_{\varepsilon}Zh+{}_{z}Zq-{}_{s}Zh+\frac{r+1}{r-1}\right](r-1)$$

$$= \frac{H_7}{7}\left\{{}_{o}d_{7}\left(\frac{P}{\alpha}\right)_{z}Z(Z-1)(r-1)\frac{h}{\varepsilon}-{}_{o}\sigma\left[{}_{\varepsilon}Z+\frac{r+1}{r-1}\right]Z\right\}$$

$$\left[{}_{\varepsilon}Zh+{}_{z}Zq-{}_{s}Zh+\frac{r+1}{r-1}\right]\left[\frac{r+1}{r-1}\right]+{}_{h}Z$$

$$= {}_{\varepsilon}Z\left[\frac{r+1}{r-1}\right]+{}_{7}Z\varepsilon+{}_{s}Zq-{}_{h}Zh+$$

$$\left[{}_{\varepsilon}Z\varepsilon+{}_{z}Zq-{}_{s}Zh+\frac{r+1}{r-1}\right]\left[\frac{r+1}{r-1}\right]+{}_{7}Z\varepsilon-{}_{s}Zq+{}_{h}Z\varepsilon-$$

$$= \left[{}_{\varepsilon}Z\varepsilon+{}_{z}Zq-{}_{s}Zh+\frac{r+1}{r-1}\right]\left[{}_{\varepsilon}Z+\frac{r+1}{r-1}\right]+{}_{h}Z_{z}(Z-1)\varepsilon-$$

$$= \frac{H_7}{7}\left\{{}_{o}d_{7}\left(\frac{P}{\alpha}\right)\frac{(r+1)h}{(r-1)_{z}Z(Z-1)\varepsilon}-\frac{(r+1)}{{}_{o}\sigma}\left[{}_{\varepsilon}Z+\frac{r+1}{r-1}\right]Z\right\}$$

TELEDYNE ENGINEERING SERVICES

BY ZM DATE 790425
CHKD. BY GM DATE 4-27-79

VERMONT YANKEE
SHELL THICKNESS REQUIREMENTS
CALCULATION PACKAGE 7426-1

SHEET NO. B-9 OF 42
PROJ. NO. 7426

$$\frac{H_t}{t} = \frac{2\left[\frac{1}{1+\nu} + \frac{\tau^3}{1-\nu}\right]\sigma_o - \frac{3}{4}(1-\tau)\tau^2\left(\frac{R}{t}\right)^2 P_o}{\frac{1-\nu}{1+\nu} + 4\tau - 6\tau^2 + \cancel{4\tau^3} + \left(\frac{1+\nu}{1-\nu}\right)\tau^4} \qquad (20)$$

Let

$$\left.\begin{aligned} [A] &= \frac{1-\nu}{1+\nu} + 4\tau - 6\tau^2 + 4\tau^3 + \left(\frac{1+\nu}{1-\nu}\right)\tau^4 \\ [B] &= 2\left[\frac{1}{1+\nu} + \frac{\tau^3}{1-\nu}\right] / [A] \\ [C] &= \frac{3}{4}(1-\tau)\tau^2 / A \end{aligned}\right\} \qquad (21)$$

$\nu = 0.3$

Then

$$\frac{H_t}{t} = [B]\,\sigma_o - [C]\left(\frac{R}{t}\right)^2 P_o$$

For t/T_o	[A]	[B]	[C]
1.0	4.396	1.0	0
0.9	3.413	1.061	0.0178
0.821		1.100	
0.8	2.707	1.109	0.0355
0.7	2.216	1.136	0.0497
0.6	1.883	1.145	0.0574
0.5	1.655	1.146	0.0567
0.4	1.482	1.161	0.0486
0.3	1.3215	1.223	0.0358
0.2	1.133	1.378	0.0212
0.156	1.033	1.500	
0.1	0.883	1.746	0.0076
0	0.538	2.857	0

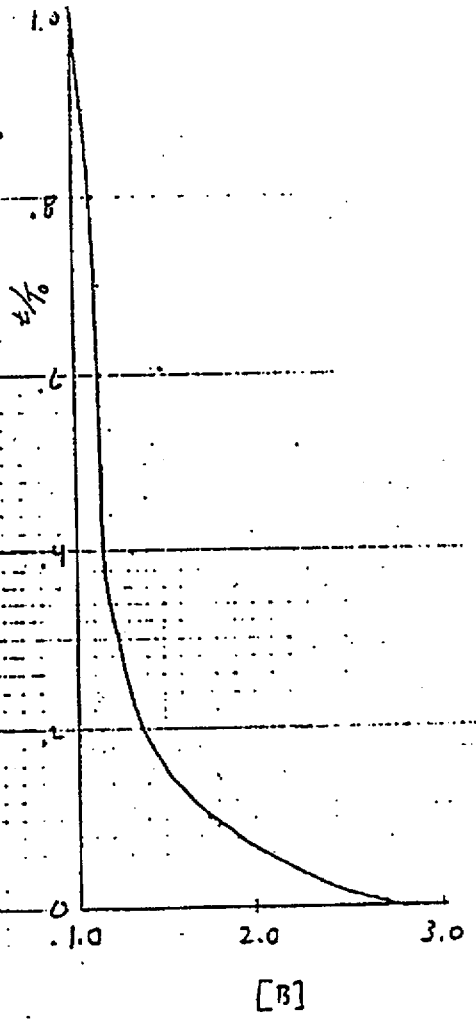

The total local membrane plus primary bending stress is

$$P_L + P_b = [B]\,\sigma_o - [C]\left(\frac{R}{t}\right)^2 P_o + \frac{3(3+\nu)}{8}\left(\frac{R}{t}\right)^2 P_o$$

$$= [B]\,\sigma_o + \left\{1.2375 - [C]\right\}\left(\frac{R}{t}\right)^2 P_o \qquad (22)$$

Noting that $0 \leq [C] < 0.06$, it is conservative to neglect the effects of $[C]$.

Then

$$P_L + P_b < [B]\,\sigma_o + 1.2375\left(\frac{R}{t}\right)^2 P_o \qquad (23)$$

The Code allowable is

$$(P_L + P_b) < 1.5\,S_m \qquad (24)$$

For Class MC S_m should be taken as S.

Therefore it is required that

$$[B]\,\sigma_o + 1.2375\left(\frac{R}{t}\right)^2 P_o \leq 1.5\,S \qquad (25)$$

If there is no excess thickness, so that $\sigma_o = S$

$$1.2375\left(\frac{R}{t}\right)^2\left(\frac{P_o}{S}\right) \leq 1.5 - [B]$$

or

$$\left(\frac{R}{t}\right)^2\left(\frac{P_o}{S}\right) \leq \frac{1.5 - [B]}{1.2375}$$

Since $\frac{R}{t} = \frac{D/2}{T_o - d} = \frac{D/T_o}{2\left(1 - \frac{d}{T_o}\right)}$

it is required that

$$\frac{D}{T_o} \leq 2\left[1 - \frac{d}{T_o}\right]\sqrt{\left(\frac{1.5 - [B]}{1.2375}\right)\frac{S}{P_o}} \qquad (26)$$

TELEDYNE ENGINEERING SERVICES

BY [illegible] DATE 790425
CHKD. BY GM DATE 6-5-79

VERMONT YANKEE
SHELL THICKNESS REQUIREMENTS
CALCULATION PACKAGE 7426-1

SHEET NO. B-11 OF 42
PROJ. NO. 7426

For

$\frac{t}{T_o} = 1 - \frac{d}{T_o}$	$\{B\}$	$1.5 - \{B\}$	$\frac{D_o}{T}\sqrt{\frac{P_o}{S}} \le 2\left[1 - \frac{d}{T_o}\right]\sqrt{\frac{1.5 - \{B\}}{1.2375}}$
1.0	1.0	0.5	1.271
0.9	1.061	0.439	1.072
0.8	1.109	0.391	0.899
0.7	1.136	0.364	0.759
0.6	1.145	0.355	0.643
0.5	1.146	0.354	0.535
0.4	1.161	0.339	0.419
0.3	1.223	0.277	0.284
0.2	1.378	0.122	0.126
0.156	1.500	0	0

TELEDYNE ENGINEERING SERVICES

BY 246 DATE 790425
CHKD. BY GM DATE 6-5-79

VERMONT YANKEE
SHELL THICKNESS REQUIREMENTS
CALCULATION PACKAGE 7426-1

SHEET NO. B-12 OF 42
PROJ. NO. 7426

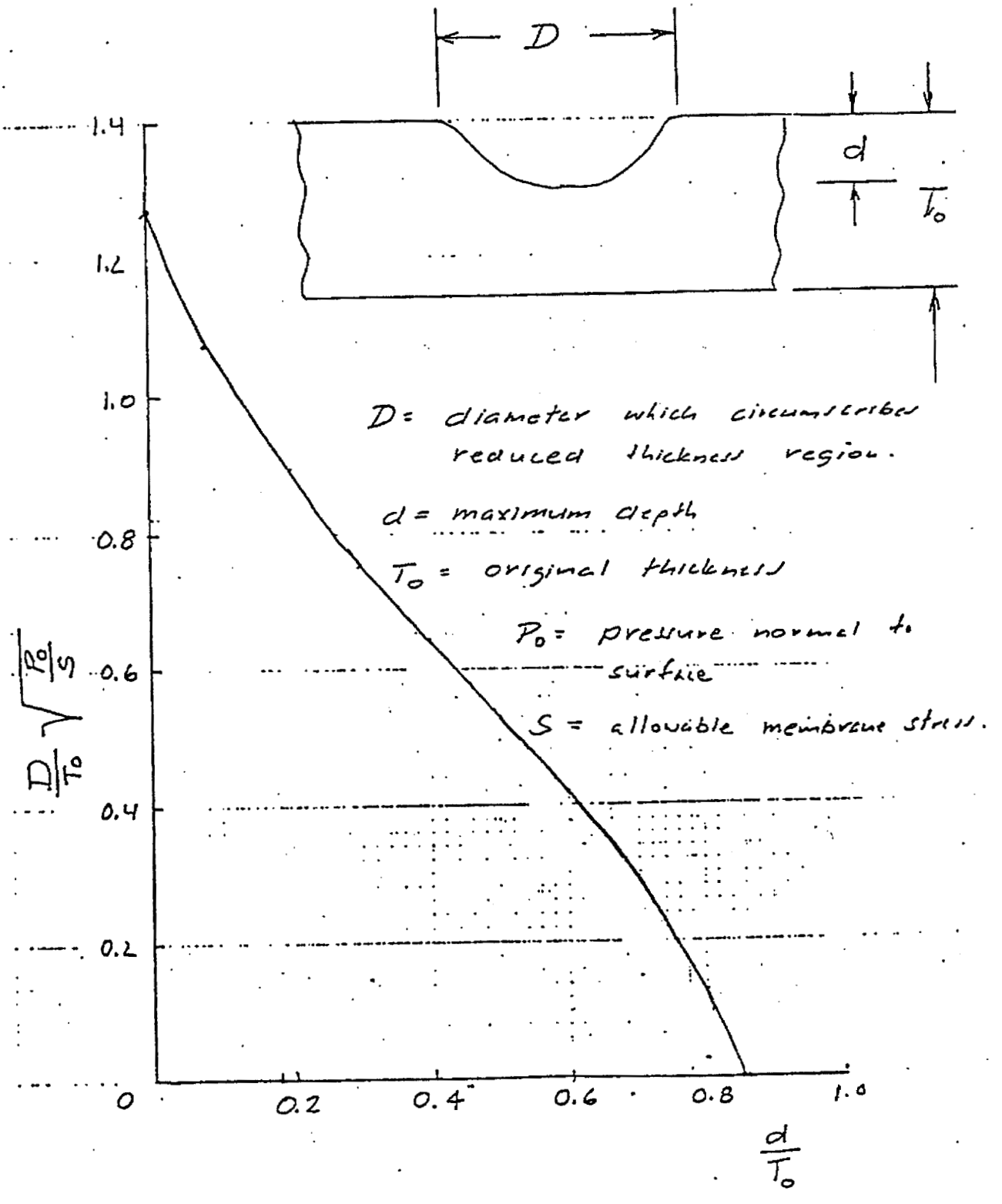

APPENDIX B.1

TORUS SHELL RANGE OF INDICATION SIZES

Specific dimensional data, the analyzed state of stress and the Code allowable stress intensity for the torus are used to determine the range of permissible indication sizes for the torus shell.

The results are based on the primary membrane stress intensities of A.1 and the general calculations for Class MC vessels provided in this appendix.

TELEDYNE ENGINEERING SERVICES

BY MEK DATE 12-4-90
CHKD. BY RJE DATE 12-10-90

VERMONT YANKEE
SHELL THICKNESS REQUIREMENTS
CALCULATION PACKAGE 7426 - 1

SHEET NO. B-14 OF 42
PROJ. NO. 7426

TORUS FREE SHELL REGION, RANGE OF INDICATION SIZES
(FILE NAME: RedVYMB.MCD)
Permissible Local Reduction in Thickness:

$E := 0 ..8$

Element := E	PMmax := E
11	8550
13	10628
15	11883
17	12957
19	11870
21	11639
23	10094
25	8886
27	7796

Primary Membrane Stress (PMmax,psi)

Minimum Torus Shell Thickness (T,in):

$T := 0.584$

Shell Mean Radius (R,in):

$R := 166.292$

Allowable Stress (S,psi):

$S := 19300$

Equivalent Pressure: $PO_E := PMmax_E \cdot \frac{T}{R}$

Element E	PO E
11	30.027
13	37.324
15	41.732
17	45.504
19	41.686
21	40.875
23	35.449
25	31.207
27	27.379

Indication Diameter Factor (X):

$$X_E := \frac{1}{T}\sqrt{\frac{PO_E}{S}}$$

Element E	X E
11	0.0675
13	0.0753
15	0.0796
17	0.0831
19	0.0796
21	0.0788
23	0.0734
25	0.0689
27	0.0645

Maximum and Minimum Values of X:

$Xmax := max(X)$ $\quad Xmax = 0.0831$

$Xmin := min(X)$ $\quad Xmin = 0.0645$

TELEDYNE ENGINEERING SERVICES

BY MEK DATE 12-4-90
CHKD. BY RKE DATE 12-10-90

VERMONT YANKEE
SHELL THICKNESS REQUIREMENTS
CALCULATION PACKAGE 7426 - 1

SHEET NO. B-15 OF 42
PROJ. NO. 7426

TORUS FREE SHELL REGION, RANGE OF INDICATION SIZES
(FILE NAME: RedVYMB.MCD)

Normalization of Thickness Reduction Curve For Torus Shell:

L := 0 ..11

$K1_L$:=	$K2_L$:=
0.0	1.271
0.1	1.072
0.2	0.899
0.3	0.759
0.4	0.643
0.5	0.535
0.6	0.419
0.7	0.284
0.8	0.126
0.844	0.0
0.9	0.0
1.0	0.0

K1 = d/T

K2 = (D/T)*[(PO/S)**1/2]

Depth of Indication (d,in): $d_L := K1_L \cdot T_L$

Diameter of Indication per Fmax: $DxFmax_L := \frac{K2_L}{Xmax}$

Diameter of Indication per Fmin: $DxFmin_L := \frac{K2_L}{Xmin}$

Normalized Values of X: $F_E := \frac{X_E}{Xmax}$

d_L	$DxFmax_L$	$DxFmin_L$
0	15.287	19.707
0.058	12.893	16.622
0.117	10.813	13.939
0.175	9.129	11.769
0.234	7.734	9.97
0.292	6.435	8.295
0.35	5.039	6.497
0.409	3.416	4.404
0.467	1.515	1.954
0.493	0	0
0.526	0	0
0.584	0	0

Element $_E$	F_E
11	0.812
13	0.906
15	0.958
17	1
19	0.957
21	0.948
23	0.883
25	0.828
27	0.776

TELEDYNE ENGINEERING SERVICES

BY MEK DATE 12-4-90
CHKD. BY RK DATE 12-10-90

VERMONT YANKEE
SHELL THICKNESS REQUIREMENTS
CALCULATION PACKAGE 7426 - 1

SHEET NO. B-16 OF 42
PROJ. NO. 7426

TORUS FREE SHELL REGION, RANGE OF INDICATION SIZES
(FILE NAME:RedVYMB.MCD)
PAGE 3
GRAPH - DIAMETER OF INDICATION (D,in) VS DEPTH OF INDICATION (d,in)

Minimum & maximum thickness available for corrosion (MinTcor,MaxTcor,in):

MinTcor := 0.192 MaxTcor := 0.348

$d1_L := if\left[d_L < MinTcor, MinTcor, d_L\right]$ $d2_L := if\left[d_L < MaxTcor, MaxTcor, d_L\right]$

For Maximum Stressed Shell Element (F = 1.0)

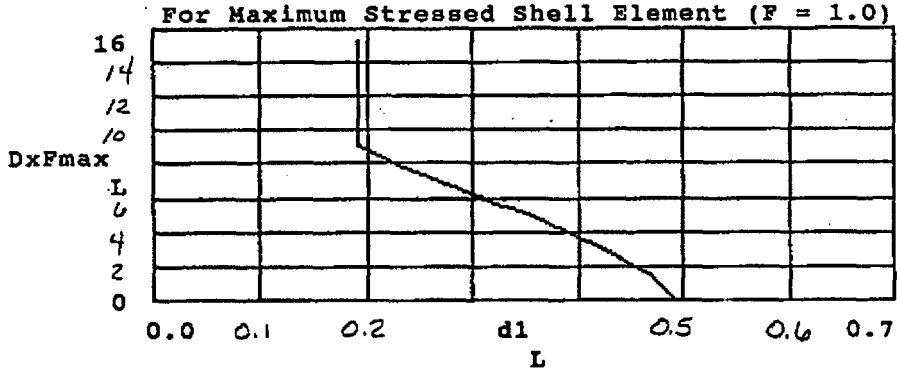

For Minimum Stressed Shell Element (F = 0.776)

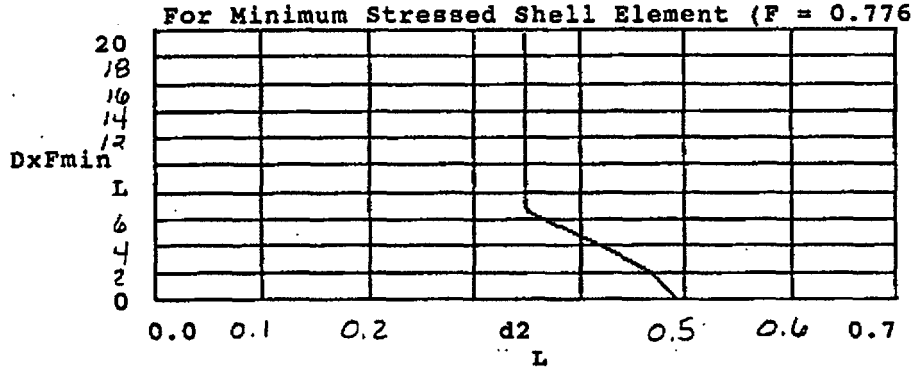

References:

(2) 1. TES Calc. Pkg. ID 5319-20, Rev. 1, "Vermont Yankee Torus Shell Analysis" & DISTRES Computer Output, Seq. No. A30TBRQ.

(6) 2. Mark I Containment Program, Structural Acceptance Criteria, Plant Unique Analysis Application Guide, Document No. NEDO-24583-1, October 1979.

(4) 3. ASME Boiler and Pressure Vessel Code, Section III, Division 1, Subsection NE, Class MC Vessels, 1974 Edition Through Summer 1977 Addenda.

(3) 4. TES Technical Report TR-5319-1, Rev. 2, Mark I Plant Unique Analysis for Vermont Yankee, Nov. 30, 1983.

TELEDYNE ENGINEERING SERVICES

BY MEK DATE 12-4-90
CHKD. BY RBE DATE 12-10-90

VERMONT YANKEE
SHELL THICKNESS REQUIREMENTS
CALCULATION PACKAGE 7426 - 1

SHEET NO. B-17 OF 42
PROJ. NO. 7426

TORUS RING GIRDER REGION(BOTTOM OF SHELL), RANGE OF INDICATION SIZES
(FILE NAME: RedVYRG1.MCD) PAGE 1

Permissible Local Reduction in Thickness:

$E := 0 .. 7$

Element $:=$ E	$PLmax_E :=$
114	8952
120	7314
126	7488
132	6656
141	5609
147	7430
153	6162
159	7458

Primary Local Membrane Stress (PLmax,psi)

Minimum Torus Shell Thickness (T,in):

$T := 0.584$

Shell Mean Radius (R,in):

$R := 166.292$

Allowable Stress (S,psi):

$S := 19300$

Equivalent Pressure: $PO_E := PLmax_E \cdot \frac{T}{R}$

Element E	PO_E
114	31.438
120	25.686
126	26.297
132	23.375
141	19.698
147	26.093
153	21.64
159	26.192

Indication Diameter Factor (X):

$$X_E := \frac{1}{T} \cdot \sqrt{\frac{PO_E}{S}}$$

Element E	X_E
114	0.0691
120	0.0625
126	0.0632
132	0.0596
141	0.0547
147	0.063
153	0.0573
159	0.0631

Maximum and Minimum Values of X:

$Xmax := max(X)$ $Xmax = 0.0691$

$Xmin := min(X)$ $Xmin = 0.0547$

TELEDYNE ENGINEERING SERVICES

BY MEK DATE 12-4-90
CHKD. BY RK DATE 12-10-90

VERMONT YANKEE
SHELL THICKNESS REQUIREMENTS
CALCULATION PACKAGE 7426 - 1

SHEET NO. B-18 OF 42
PROJ. NO. 7426

TORUS RING GIRDER REGION(BOTTOM OF SHELL), RANGE OF INDICATION SIZES
(FILE NAME: RedVYRG1.MCD)

Normalization of Thickness Reduction Curve For Torus Shell:

L := 0 ..11

$K1_L$:=	$K2_L$:=
0.0	1.271
0.1	1.072
0.2	0.899
0.3	0.759
0.4	0.643
0.5	0.535
0.6	0.419
0.7	0.284
0.8	0.126
0.844	0.0
0.9	0.0
1.0	0.0

K1 = d/T

K2 = (D/T)*[(PO/S)**1/2]

Depth of Indication (d,in): $d_L := K1_L \cdot T$

Diameter of Indication per Fmax: $DxFmax_L := \frac{K2_L}{Xmax}$

Diameter of Indication per Fmin: $DxFmin_L := \frac{K2_L}{Xmin}$

Normalized Values of X: $F_E := \frac{X_E}{Xmax}$

d_L	$DxFmax_L$	$DxFmin_L$
0	18.391	23.234
0.058	15.512	19.596
0.117	13.008	16.434
0.175	10.983	13.875
0.234	9.304	11.754
0.292	7.741	9.78
0.35	6.063	7.659
0.409	4.109	5.192
0.467	1.823	2.303
0.493	0	0
0.526	0	0
0.584	0	0

$Element_E$	F_E
114	1
120	0.904
126	0.915
132	0.862
141	0.792
147	0.911
153	0.83
159	0.913

TORUS RING GIRDER REGION(BOTTOM OF SHELL), RANGE OF INDICATION SIZES
(FILE NAME: RedVYRG1.MCD) PAGE 3
GRAPH - DIAMETER OF INDICATION (D,in) VS DEPTH OF INDICATION (d,in)

Minimum & maximum thickness available for corrosion (MinTcor,MaxTcor,in):
MinTcor := 0.403 MaxTcor := 0.471

$d1_L := if\left[d_L < MinTcor, MinTcor, d_L\right]$ $d2_L := if\left[d_L < MaxTcor, MaxTcor, d_L\right]$

For Maximum Stressed Shell Element (F = 1.0)

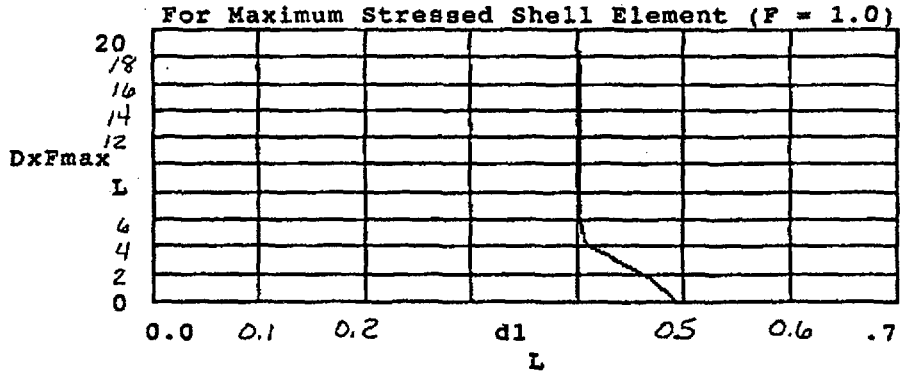

For Minimum Stressed Shell Element (F = 0.792)

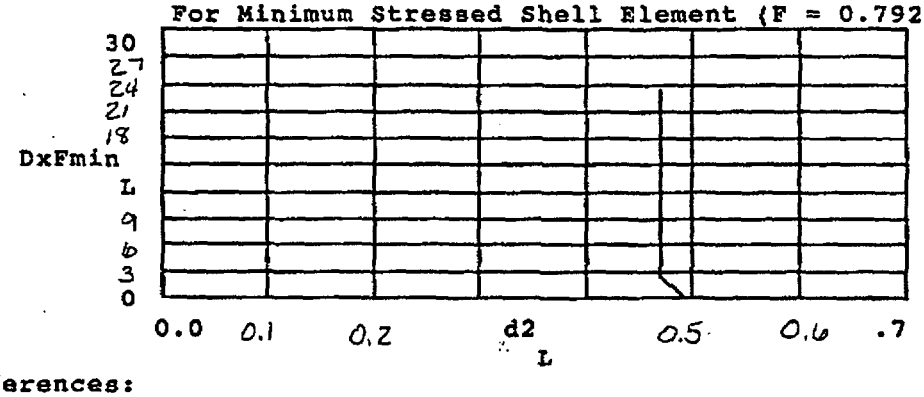

References:

(2) 1. TES Calc. Pkg. ID 5319-20, Rev. 1, "Vermont Yankee Torus Shell Analysis" & DISTRES Computer Output, Seq. No. A30TBRQ.

(6) 2. Mark I Containment Program, Structural Acceptance Criteria, Plant Unique Analysis Application Guide, Document No. NEDO-24583-1, October 1979.

(4) 3. ASME Boiler and Pressure Vessel Code, Section III, Division 1, Subsection NE, Class MC Vessels, 1974 Edition Through Summer 1977 Addenda.

(3) 4. TES Technical Report TR-5319-1, Rev. 2, Mark I Plant Unique Analysis for Vermont Yankee, Nov. 30, 1983.

APPENDIX B.2

VENT SYSTEM RANGE OF INDICATION SIZES

The range of indication sizes for the vent system components - the vent pipe, vent pipe/SRV Line penetrations, vent pipe/SRV Line support attachments, vent header, and downcomers - were calculated using the A.2 primary membrane stress intensities as well as vent system specific dimensions by the same procedures utilized for the torus shell (B.1).

TELEDYNE ENGINEERING SERVICES

BY MEK DATE 12-17-90
CHKD. BY RJE DATE 12-17-90

VERMONT YANKEE
SHELL THICKNESS REQUIREMENTS
CALCULATION PACKAGE 7426-1

SHEET NO. B-21 OF 42
PROJ. NO. 7426

VENT HEADER FREE SHELL AND LOCAL SHELL REGIONS
VERMONT YANKEE VENT SYSTEM

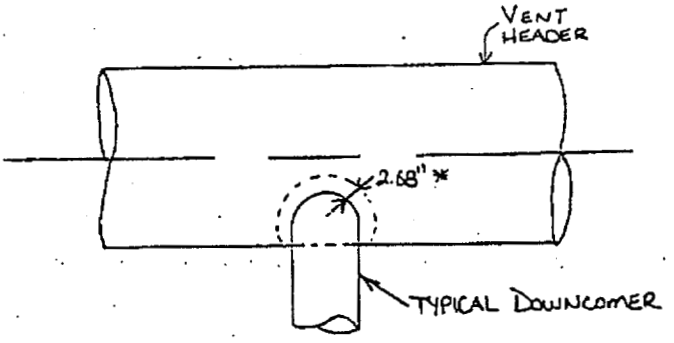

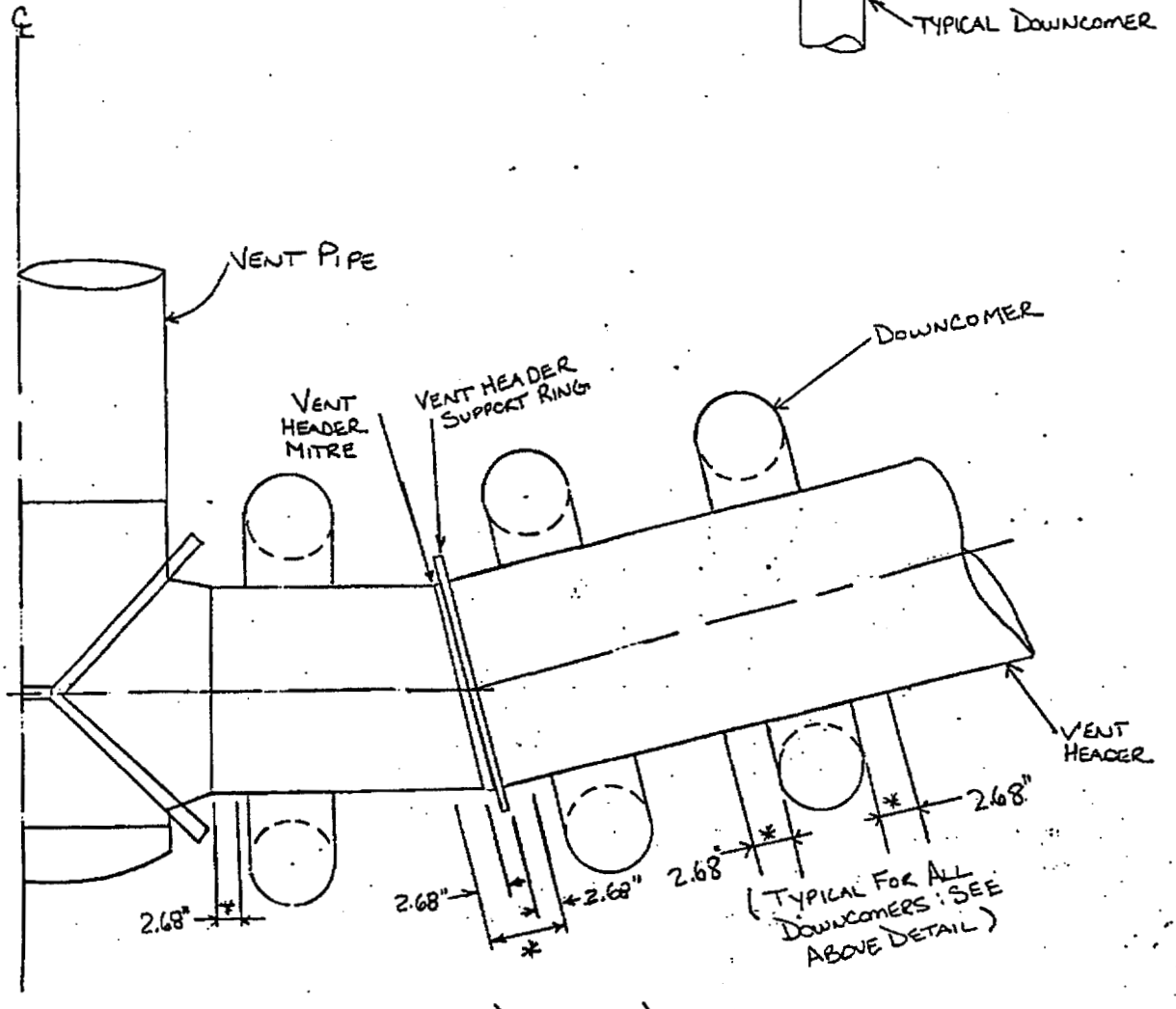

* LOCAL REGIONS ($1.0\sqrt{Rt}$) = 2.68")

VENT PIPE GENERAL AND LOCAL, RANGE OF INDICATION SIZES
(FILE NAME:VENTVY.MCD)

PERMISSIBLE REDUCTION IN THICKNESS:

Primary Membrane Stress (Pmax,psi): $Pmax := 12203$

Minimum Shell Thickness (T,in): $T := 0.25$

Shell Mean Radius (R,in): $R := 40.625$

Allowable Stress (S,psi): $S := 19300$

Equivalent Pressure: $PO := Pmax \cdot \frac{T}{R}$ $PO = 75.095$

Indication Diameter Factor (X): $X := \frac{1}{T} \cdot \sqrt{\frac{PO}{S}}$ $X = 0.25$

NORMILIZATION OF THICKNESS REDUCTION CURVE:

$L := 0 ..11$

$K1_L :=$	$K2_L :=$
0.0	1.271
0.1	1.072
0.2	0.899
0.3	0.759
0.4	0.643
0.5	0.535
0.6	0.419
0.7	0.284
0.8	0.126
0.844	0.0
0.9	0.0
1.0	0.0

K1 = d/T

K2 = (D/T)*[(PO/S)**1/2]

Depth of Indication (d,in): $d_L := K1_L \cdot T$

Diameter of Indication per F: $DxF_L := \frac{K2_L}{X}$

VENT PIPE GENERAL AND LOCAL, RANGE OF INDICATION SIZES
(FILE NAME:VENTVY.MCD)

Depth and Diameter of Indication:

d_L	DxF_L
0	5.094
0.025	4.296
0.05	3.603
0.075	3.042
0.1	2.577
0.125	2.144
0.15	1.679
0.175	1.138
0.2	0.505
0.211	0
0.225	0
0.25	0

GRAPH - DIAMETER OF INDICATION (D,in) VS DEPTH OF INDICATION (d,in)

Minimum Thickness available for corrosion (Tcor,in): Tcor := 0.092

$$d_L := \text{if}\left[d_L < Tcor, Tcor, d_L\right]$$

For Maximum Stressed Shell Element (F = 1.0)

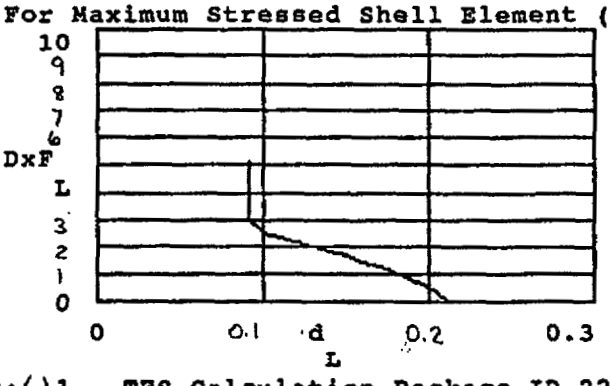

References: (10) 1. TES Calculation Package ID 2252-5, Rev. 1, "Vent Header and Intersection With Main Vent, Combined Loads, Vermont Yankee," Jan. 17, 1983.

(6) 2. Mark I Containment Program, Structural Acceptance Criteria, Plant Unique Analysis Application Guide, Document Number NEDO-24583-1, October 1979.

(4) 3. ASME Boiler And Pressure Vessel Code, Section III, Division 1, Subsection NE, Class MC Vessels, 1974 Edition through Summer 1977 Addenda.

(3) 4. TES Technical Report TR-5319-1, Rev. 2, Mark I Plant Unique Analysis for Vermont Yankee, November 30, 1983.

TELEDYNE ENGINEERING SERVICES

BY MEK DATE 12-14-90
CHKD. BY RK DATE 12-18-90

VERMONT YANKEE
SHELL THICKNESS REQUIREMENTS
CALCULATION PACKAGE 7426-1

SHEET NO. B-24 OF 42
PROJ. NO. 7426

VENT HEADER, VENT HEADER AT MITRE JOINTS, VENT HEADER AT DOWNCOMERS, RANGE OF INDICATION SIZES(FILE NAME:VHVY.MCD)

PERMISSIBLE REDUCTION IN THICKNESS:

Primary Membrane Stress:

Vent Header (Pmax1,psi) $Pmax1 := 8568$

Vent Header at Mitre Joint (Pmax2,psi): $Pmax2 := 27137$

Vent Header at Downcomer (Pmax3,psi): $Pmax3 := 36719$

Minimum Shell Thickness (T,in): $T := 0.25$

Shell Mean Radius (R,in): $R := 28.625$

Allowable Stress (S,psi): $S := 19300$

Equivalent Pressure:

Vent Header: $PO1 := Pmax1 \cdot \frac{T}{R}$ $PO1 = 74.83$

Vent Header at Mitre Joint: $PO2 := Pmax2 \cdot \frac{T}{R}$ $PO2 = 237.004$

Vent Header at Downcomer: $PO3 := Pmax3 \cdot \frac{T}{R}$ $PO3 = 320.69$

Indication Diameter Factor (X):

Vent Header: $X1 := \frac{1}{T} \cdot \sqrt{\frac{PO1}{S}}$ $X1 = 0.249$

Vent Header at Mitre Joint: $X2 := \frac{1}{T} \cdot \sqrt{\frac{PO2}{S}}$ $X2 = 0.443$

Vent Header at Downcomer: $X3 := \frac{1}{T} \cdot \sqrt{\frac{PO3}{S}}$ $X3 = 0.516$

VENT HEADER, VENT HEADER AT MITRE JOINTS, VENT HEADER AT DOWNCOMERS, RANGE OF INDICATION SIZES(FILE NAME:VHVY.MCD)

NORMILIZATION OF THICKNESS REDUCTION CURVE:

L := 0 ..11

$K1_L$:=	$K2_L$:=
0.0	1.271
0.1	1.072
0.2	0.899
0.3	0.759
0.4	0.643
0.5	0.535
0.6	0.419
0.7	0.284
0.8	0.126
0.844	0.0
0.9	0.0
1.0	0.0

K1 = d/T

K2 = (D/T)*[(PO/S)**1/2]

Depth of Indication (d,in): $d_L := K1_L \cdot T$

Diameter of Indication per F:

Vent Header: $DxF1_L := \frac{K2_L}{X1}$

Vent Header at Mitre Joint: $DxF2_L := \frac{K2_L}{X2}$

Vent Header at Downcomer: $DxF3_L := \frac{K2_L}{X3}$

d_L	$DxF1_L$	$DxF2_L$	$DxF3_L$
0	5.103	2.867	2.465
0.025	4.304	2.418	2.079
0.05	3.609	2.028	1.744
0.075	3.047	1.712	1.472
0.1	2.582	1.451	1.247
0.125	2.148	1.207	1.038
0.15	1.682	0.945	0.813
0.175	1.14	0.641	0.551
0.2	0.506	0.284	0.244
0.211	0	0	0
0.225	0	0	0
0.25	0	0	0

TELEDYNE ENGINEERING SERVICES

BY MEK DATE 12-14-90
CHKD. BY RKE DATE 12-18-90

VERMONT YANKEE
SHELL THICKNESS REQUIREMENTS
CALCULATION PACKAGE 7426-1

SHEET NO. B-26 OF 42
PROJ. NO. 7426

VENT HEADER, VENT HEADER AT MITRE JOINTS, VENT HEADER AT DOWNCOMERS, RANGE OF INDICATION SIZES(FILE NAME:VHVY.MCD) PAGE 3

GRAPH - DIAMETER OF INDICATION (D,in) VS DEPTH OF INDICATION (d,in)

Thickness available for corrosion (Tcor,in):

(1) Vent Header: $Tcor1 := 0.139 \quad d1_L := if\left[d_L < Tcor1, Tcor1, d_L\right]$

(2) Vent Header at Mitre Joint: $Tcor2 := 0.016 \quad d2_L := if\left[d_L < Tcor2, Tcor2, d_L\right]$

(3) Vent Header at Downcomers: $Tcor3 := 0.006 \quad d3_L := if\left[d_L < Tcor3, Tcor3, d_L\right]$

For Maximum Stressed Shell Element (F = 1.0)

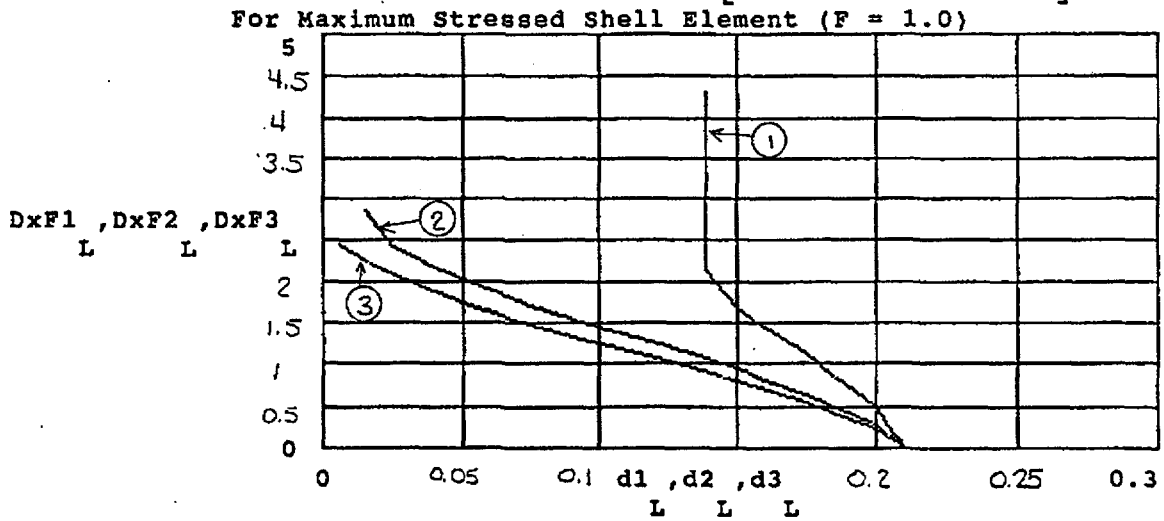

References:
(10) 1. TES Calculation Package ID 2252-5, Rev. 1, "Vent Header And Intersection With Main Vent, Combined Loads, Vermont Yankee," Jan. 17, 1983.

(6) 2. Mark I Containment Program, Structural Acceptance Criteria, Plant Unique Analysis Application Guide, Document Number NEDO-24583-1, October 1979.

(4) 3. ASME Boiler And Pressure Vessel Code, Section III, Division 1, Subsection NE, Class MC Vessels, 1974 Edition through Summer 1977 Addenda.

(3) 4. TES Technical Report TR-5319-1, Rev. 2, Mark I Plant Unique Analysis for Vermont Yankee, November 30, 1983.

(11) 5. Tes Calculation Package ID 2252-4, Rev. 1, "Combined Loads, Vent Header-Downcomer Intersection, Vermont Yankee," Jan. 17, 1983.

TELEDYNE ENGINEERING SERVICES

BY MEK DATE 12-17-90
CHKD. BY RKE DATE 12-17-90

VERMONT YANKEE
SHELL THICKNESS REQUIREMENTS
CALCULATION PACKAGE 7426-1

SHEET NO. B-27 OF 42
PROJ. NO. 7426

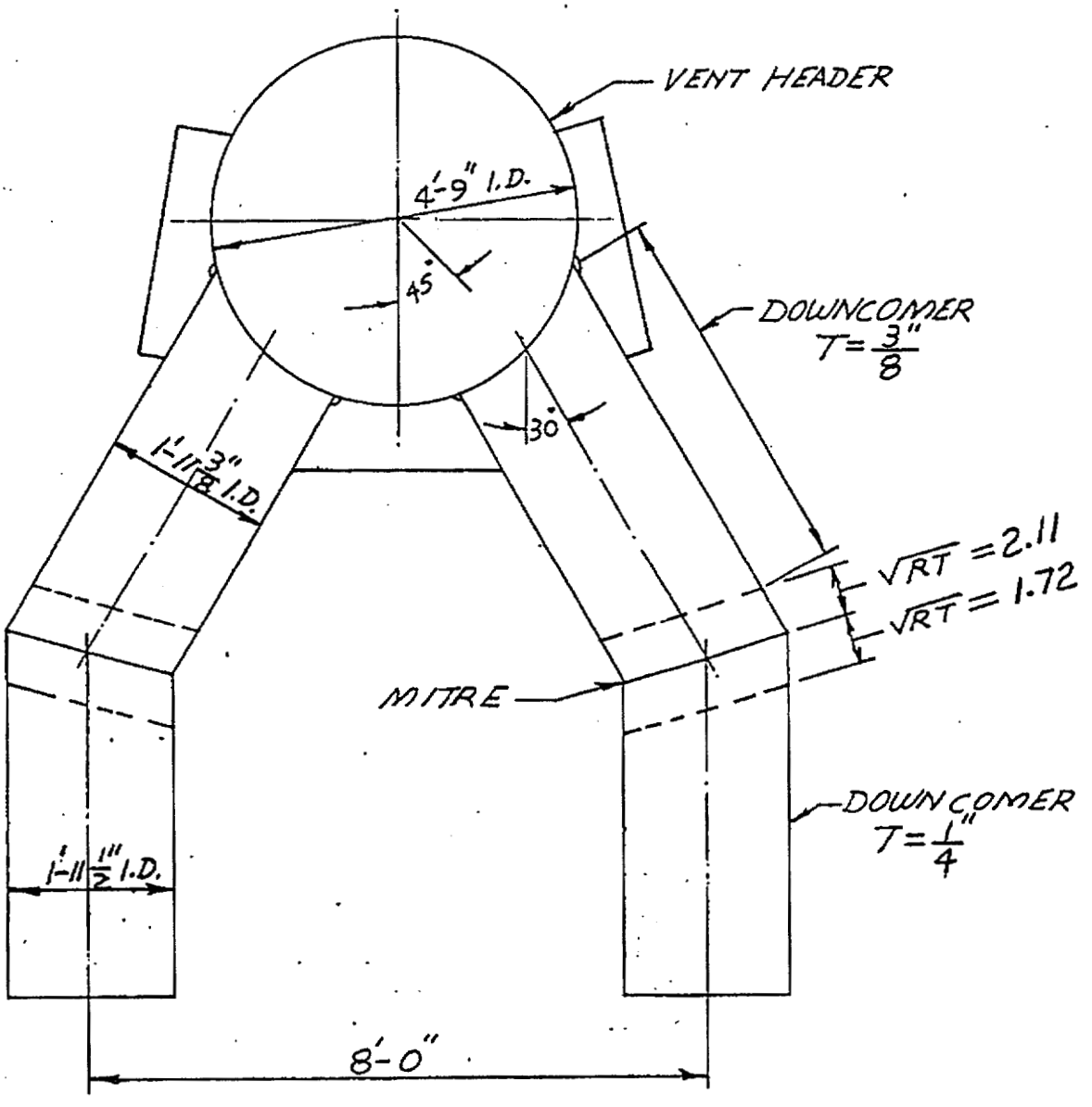

FREE AND LOCAL SHELL REGIONS
FOR THE DOWNCOMERS
VERMONT YANKEE NUCLEAR STATION

TELEDYNE ENGINEERING SERVICES

BY MEK DATE 12-14-90
CHKD. BY RKE DATE 12-18-90

VERMONT YANKEE
SHELL THICKNESS REQUIREMENTS
CALCULATION PACKAGE 7426-1

SHEET NO. B-28 OF 42
PROJ. NO. 7426

DOWNCOMERS(3/8" THK) GENERAL AND LOCAL, RANGE OF INDICATION SIZES
(FILE NAME:VYDOWN3.MCD)

PERMISSIBLE REDUCTION IN THICKNESS:

Primary Membrane Stress (Pmax,psi): $Pmax := 12071$

Minimum Shell Thickness (T,in): $T := 0.375$

Shell Mean Radius (R,in): $R := 11.875$

Allowable Stress (S,psi): $S := 19300$

Equivalent Pressure: $PO := Pmax \cdot \frac{T}{R}$ $PO = 381.189$

Indication Diameter Factor (X): $X := \frac{1}{T} \cdot \sqrt{\frac{PO}{S}}$ $X = 0.375$

NORMILIZATION OF THICKNESS REDUCTION CURVE:

$L := 0 .. 11$

$K1_L :=$	$K2_L :=$
0.0	1.271
0.1	1.072
0.2	0.899
0.3	0.759
0.4	0.643
0.5	0.535
0.6	0.419
0.7	0.284
0.8	0.126
0.844	0.0
0.9	0.0
1.0	0.0

$K1 = d/T$

$K2 = (D/T)*[(PO/S)**1/2]$

Depth of Indication (d,in): $d_L := K1_L \cdot T$

Diameter of Indication per F: $DxF_L := \frac{K2_L}{X}$

TELEDYNE ENGINEERING SERVICES

BY MEK DATE 12-14-90
CHKD. BY RJE DATE 12-18-90

VERMONT YANKEE
SHELL THICKNESS REQUIREMENTS
CALCULATION PACKAGE 7426-1

SHEET NO. B-29 OF 42
PROJ. NO. 7426

DOWNCOMERS(3/8" THK) GENERAL AND LOCAL, RANGE OF INDICATION SIZES
(FILE NAME:VYDOWN3.MCD)

Depth and Diameter of Indication:

d_L	DxF_L
0	3.391
0.038	2.86
0.075	2.399
0.113	2.025
0.15	1.716
0.188	1.428
0.225	1.118
0.263	0.758
0.3	0.336
0.317	0
0.338	0
0.375	0

GRAPH - DIAMETER OF INDICATION (D,in) VS DEPTH OF INDICATION (d,in)

Minimum Thickness available for corrosion (Tcor,in): Tcor := 0.140

$$d_L := \text{if}\left[d_L < Tcor, Tcor, d_L\right]$$

For Maximum Stressed Shell Element (F = 1.0)

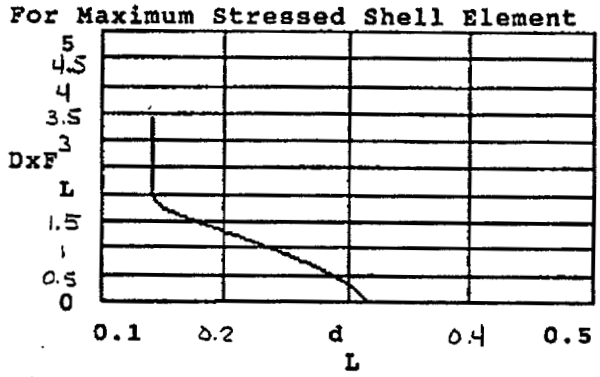

References: (10) 1. TES Calculation Package ID 2252-5, Rev. 1, "Vent Header And Intersection With Main Vent, Combined Loads, Vermont Yankee," Jan. 17, 1983.

(6) 2. Mark I Containment Program, Structural Acceptance Criteria, Plant Unique Analysis Application Guide, Document Number NEDO-24583-1, October 1979.

(4) 3. ASME Boiler And Pressure Vessel Code, Section III, Division 1, Subsection NE, Class MC Vessels, 1974 Edition through Summer 1977 Addenda.

(3) 4. TES Technical Report TR-5319-1, Rev. 2, Mark I Plant Unique Analysis for Vermont Yankee, November 30, 1983.

DOWNCOMERS(1/4" THK) GENERAL AND LOCAL, RANGE OF INDICATION SIZES
(FILE NAME:VYDOWN25.MCD)

PERMISSIBLE REDUCTION IN THICKNESS:

Primary Membrane Stress (Pmax,psi): $Pmax := 12071$

Minimum Shell Thickness (T,in): $T := 0.25$

Shell Mean Radius (R,in): $R := 11.875$

Allowable Stress (S,psi): $S := 19300$

Equivalent Pressure: $PO := Pmax \cdot \frac{T}{R}$ $PO = 254.126$

Indication Diameter Factor (X): $X := \frac{1}{T} \cdot \sqrt{\frac{PO}{S}}$ $X = 0.459$

NORMILIZATION OF THICKNESS REDUCTION CURVE:

$L := 0 .. 11$

$K1_L :=$	$K2_L :=$
0.0	1.271
0.1	1.072
0.2	0.899
0.3	0.759
0.4	0.643
0.5	0.535
0.6	0.419
0.7	0.284
0.8	0.126
0.844	0.0
0.9	0.0
1.0	0.0

$K1 = d/T$

$K2 = (D/T)*[(PO/S)**1/2]$

Depth of Indication (d,in): $d_L := K1_L \cdot T$

Diameter of Indication per F: $DxF_L := \frac{K2_L}{X}$

DOWNCOMERS(1/4" THK) GENERAL AND LOCAL, RANGE OF INDICATION SIZES
(FILE NAME:VYDOWN25.MCD)

Depth and Diameter of Indication:

d_L	$D \times F_L$
0	2.769
0.025	2.336
0.05	1.959
0.075	1.654
0.1	1.401
0.125	1.166
0.15	0.913
0.175	0.619
0.2	0.275
0.211	0
0.225	0
0.25	0

GRAPH - DIAMETER OF INDICATION (D,in) VS DEPTH OF INDICATION (d,in)

Minimum Thickness available for corrosion (Tcor,in): Tcor := 0.094

$$d_L := \text{if}\left[d_L < Tcor, Tcor, d_L\right]$$

For Maximum Stressed Shell Element (F = 1.0)

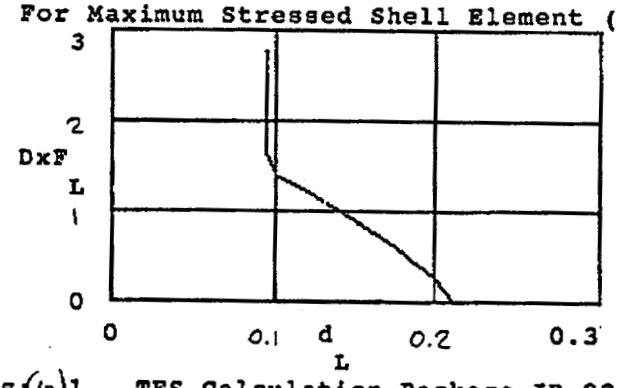

References: (10) 1. TES Calculation Package ID 2252-5, Rev. 1, "Vent Header And Intersection With Main Vent, Combined Loads, Vermont Yankee," Jan. 17, 1983.

(6) 2. Mark I Containment Program, Structural Acceptance Criteria, Plant Unique Analysis Application Guide, Document Number NEDO-24583-1, October 1979.

(4) 3. ASME Boiler And Pressure Vessel Code, Section III, Division 1, Subsection NE, Class MC Vessels, 1974 Edition through Summer 1977 Addenda.

(3) 4. TES Technical Report TR-5319-1, Rev. 2, Mark I Plant Unique Analysis for Vermont Yankee, November 30, 1983.

TELEDYNE ENGINEERING SERVICES

BY MEK DATE 12-16-90
CHKD. BY GKE DATE 12-17-90

VERMONT YANKEE
SHELL THICKNESS REQUIREMENTS
CALCULATION PACKAGE 7426-1

SHEET NO. B-32 OF 42
PROJ. NO. 7426

VERMONT YANKEE - VENT SYSTEM
VENT PIPE / SRV LINES A, B, C AND D

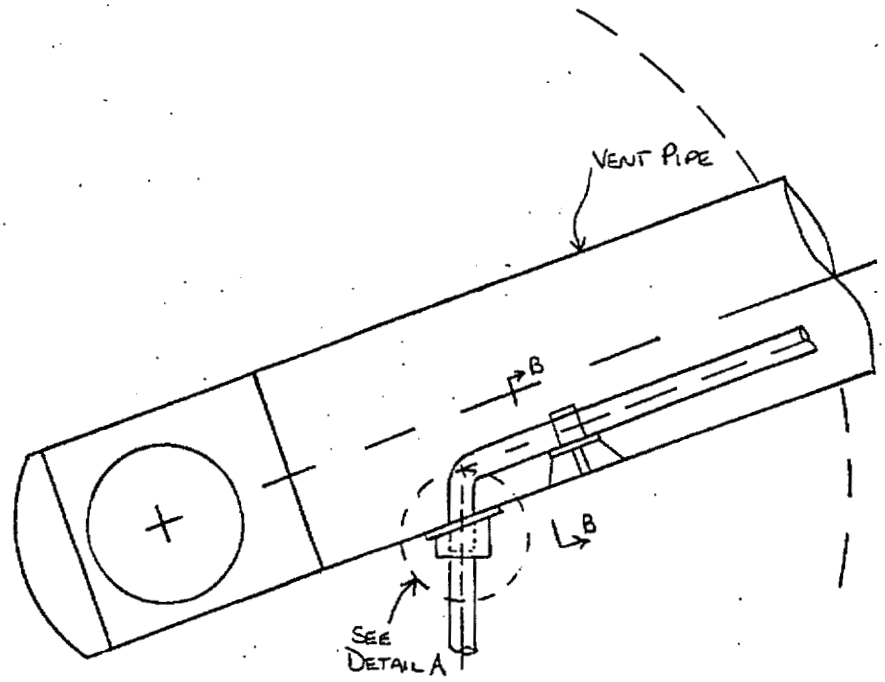

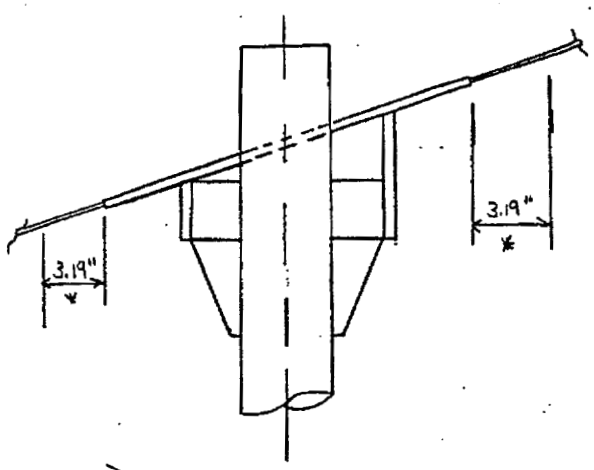

DETAIL A
(SRV LINE PENETRATION)

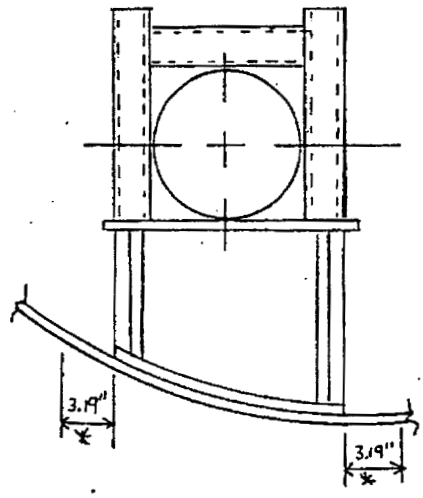

SECTION B-B
(SRV LOWER SUPPORT)

* LOCAL REGIONS = $1.0\sqrt{RT}$ = 3.19"

TELEDYNE ENGINEERING SERVICES

BY MEK DATE 12-16-90
CHKD. BY RHE DATE 12-17-90

VERMONT YANKEE
SHELL THICKNESS REQUIREMENTS
CALCULATION PACKAGE 7426-1

SHEET NO. B-33 OF 42
PROJ. NO. 7426

VERMONT YANKEE - VENT SYSTEM
VENT PIPE / SRV LINES A, B, C AND D PENETRATION

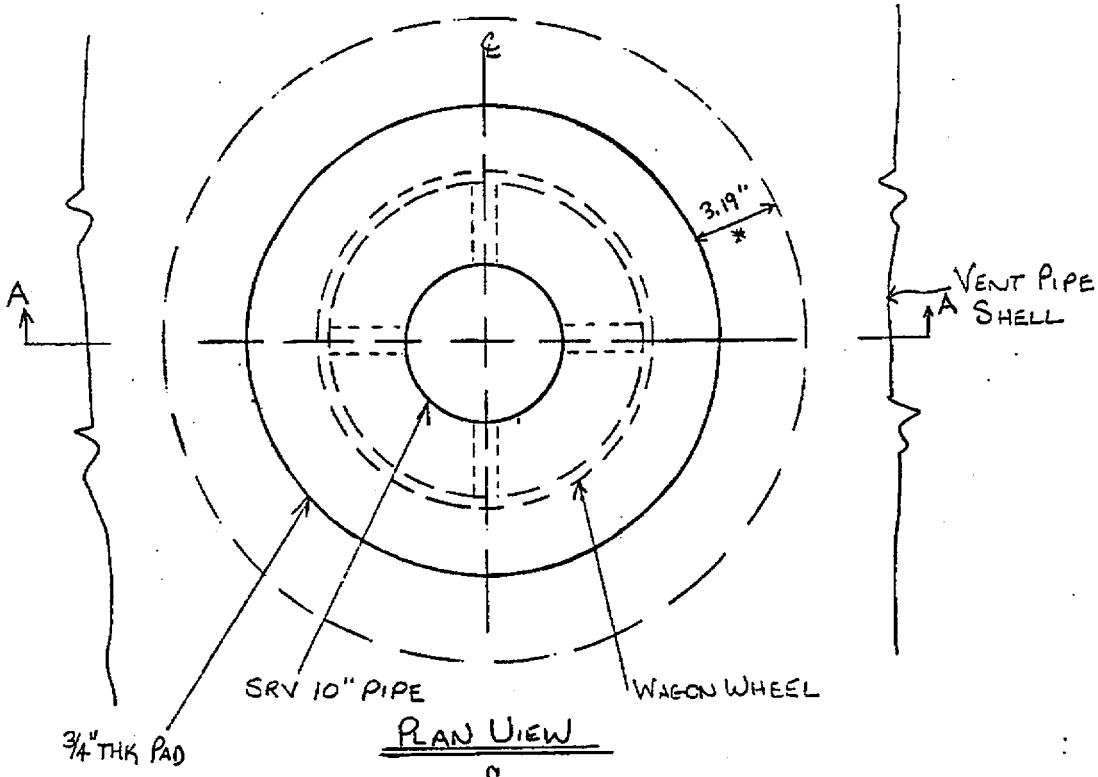

PLAN VIEW

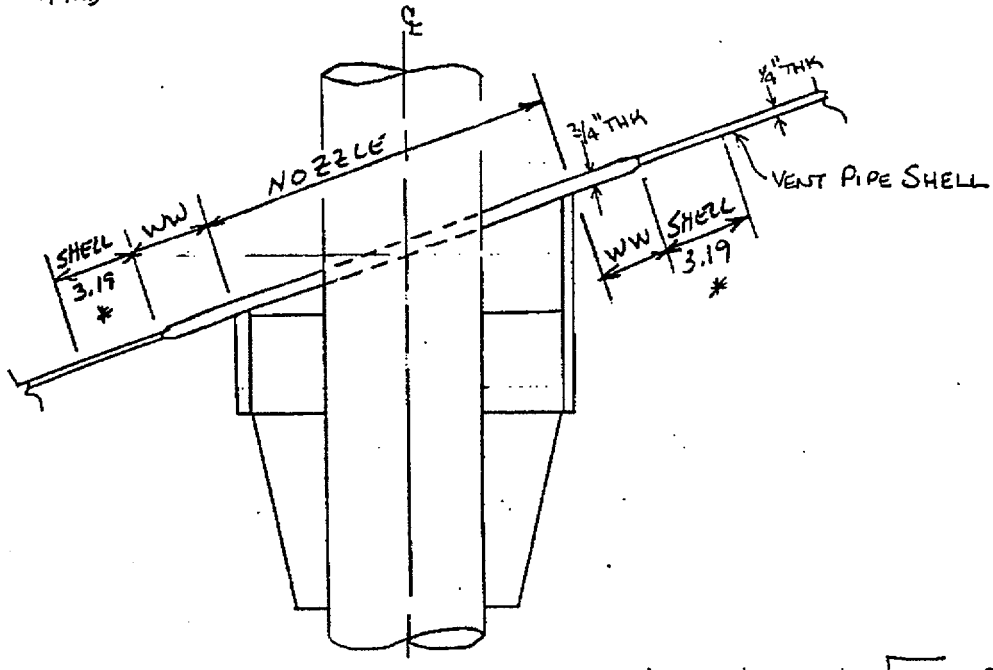

SECTION A-A
(SRV - LINE PENETRATION)

* LOCAL AREA = $1.0\sqrt{RT}$ = 3.19"

VENT PIPE/SRV(A,B,C,D) AT NOZZLE INTERSECTION (ELEMENT 71),
RANGE OF INDICATION SIZES (FILE NAME:VYNOZ.MCD)

PERMISSIBLE REDUCTION IN THICKNESS:

Primary Membrane Stress (Pmax,psi): $Pmax := 24302$

Minimum Shell Thickness (T,in): $T := 0.75$

Shell Mean Radius (R,in): $R := 40.875$

Allowable Stress (S,psi): $S := 19300$

Equivalent Pressure: $PO := Pmax \cdot \frac{T}{R}$ $PO = 445.908$

Indication Diameter Factor (X): $X := \frac{1}{T} \cdot \sqrt{\frac{PO}{S}}$ $X = 0.203$

NORMILIZATION OF THICKNESS REDUCTION CURVE:

$L := 0 ..11$

$K1_L :=$	$K2_L :=$
0.0	1.271
0.1	1.072
0.2	0.899
0.3	0.759
0.4	0.643
0.5	0.535
0.6	0.419
0.7	0.284
0.8	0.126
0.844	0.0
0.9	0.0
1.0	0.0

K1 = d/T

K2 = (D/T)*[(PO/S)**1/2]

Depth of Indication (d,in): $d_L := K1_L \cdot T$

Diameter of Indication per F: $DxF_L := \frac{K2_L}{X}$

TELEDYNE ENGINEERING SERVICES

BY MEK DATE 12-18-90
CHKD. BY RAF DATE 12-18-90

VERMONT YANKEE
SHELL THICKNESS REQUIREMENTS
CALCULATION PACKAGE 7426-1

SHEET NO. B-35 OF 42
PROJ. NO. 7426

VENT PIPE/SRV(A,B,C,D) AT NOZZLE INTERSECTION (ELEMENT 71),
RANGE OF INDICATION SIZES (FILE NAME:VYNOZ.MCD)

Depth and Diameter of Indication:

d_L	DxF_L
0	6.271
0.075	5.289
0.15	4.436
0.225	3.745
0.3	3.173
0.375	2.64
0.45	2.067
0.525	1.401
0.6	0.622
0.633	0
0.675	0
0.75	0

GRAPH - DIAMETER OF INDICATION (D,in) VS DEPTH OF INDICATION (d,in)

Thickness available for corrosion (Tcor,in): Tcor := 0.120

$$d_L := \text{if}\left[d_L < Tcor, Tcor, d_L\right]$$

For Maximum Stressed Shell Element (F = 1.0)

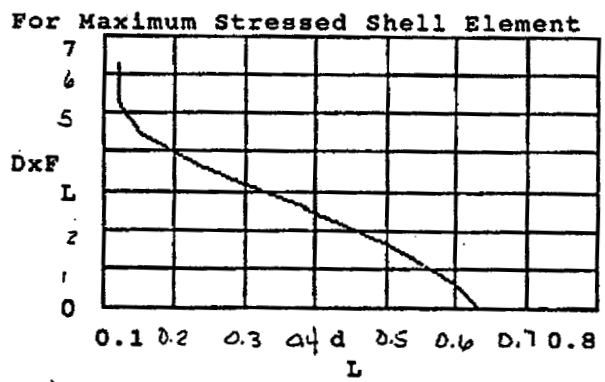

References: (16) 1. TES Calculation Package ID 5319-28, Rev. 0, "SRV - Vent Pipe Penetration Stress Evaluation -Vermont Yankee - S/RV Lines A to D," May 3, 1983.

(6) 2. Mark I Containment Program, Structural Acceptance Criteria, Plant Unique Analysis Application Guide, Document Number NEDO-24583-1, October 1979.

(4) 3. ASME Boiler And Pressure Vessel Code, Section III, Division 1, Subsection NE, Class MC Vessels, 1974 Edition through Summer 1977 Addenda.

(3) 4. TES Technical Report TR-5319-1, Rev. 2, Mark I Plant Unique Analysis for Vermont Yankee, November 30, 1983.

TELEDYNE ENGINEERING SERVICES

BY MEK DATE 12-18-90
CHKD. BY RAE DATE 12-18-90

VERMONT YANKEE
SHELL THICKNESS REQUIREMENTS
CALCULATION PACKAGE 7426-1

SHEET NO. B-36 OF 42
PROJ. NO. 7426

VENT PIPE/SRV(A,B,C,D) AT WAGON WHEEL (ELEMENT 35),
RANGE OF INDICATION SIZES (FILE NAME:VYWW.MCD)

PERMISSIBLE REDUCTION IN THICKNESS:

Primary Membrane Stress (Pmax,psi): $Pmax := 21932$

Minimum Shell Thickness (T,in): $T := 0.75$

Shell Mean Radius (R,in): $R := 40.875$

Allowable Stress (S,psi): $S := 19300$

Equivalent Pressure: $PO := Pmax \cdot \frac{T}{R}$ $PO = 402.422$

Indication Diameter Factor (X): $X := \frac{1}{T} \cdot \sqrt{\frac{PO}{S}}$ $X = 0.193$

NORMILIZATION OF THICKNESS REDUCTION CURVE:

$L := 0 ..11$

$K1_L :=$	$K2_L :=$
0.0	1.271
0.1	1.072
0.2	0.899
0.3	0.759
0.4	0.643
0.5	0.535
0.6	0.419
0.7	0.284
0.8	0.126
0.844	0.0
0.9	0.0
1.0	0.0

K1 = d/T

K2 = (D/T)*[(PO/S)**1/2]

Depth of Indication (d,in): $d_L := K1_L \cdot T$

Diameter of Indication per F: $DxF_L := \frac{K2_L}{X}$

VENT PIPE/SRV(A,B,C,D) AT WAGON WHEEL (ELEMENT 35),
RANGE OF INDICATION SIZES (FILE NAME:VYWW.MCD)

Depth and Diameter of Indication:

d_L	DxF_L
0	6.602
0.075	5.568
0.15	4.669
0.225	3.942
0.3	3.34
0.375	2.779
0.45	2.176
0.525	1.475
0.6	0.654
0.633	0
0.675	0
0.75	0

GRAPH - DIAMETER OF INDICATION (D,in) VS DEPTH OF INDICATION (d,in)

Thickness available for corrosion (Tcor,in): Tcor := 0.182

$$d_L := \text{if}\left[d_L < Tcor, Tcor, d_L\right]$$

For Maximum Stressed Shell Element (F = 1.0)

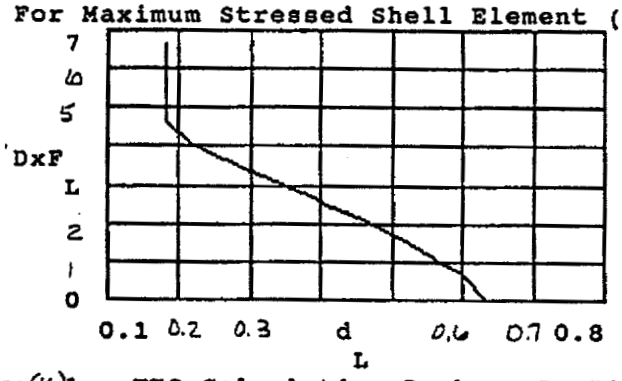

References:(16)1. TES Calculation Package ID 5319-28, Rev. 0, "SRV - Vent Pipe Penetration Stress Evaluation -Vermont Yankee - S/RV Lines A to D," May 3, 1983.

(6)2. Mark I Containment Program, Structural Acceptance Criteria, Plant Unique Analysis Application Guide, Document Number NEDO-24583-1, October 1979.

(4)3. ASME Boiler And Pressure Vessel Code, Section III, Division 1, Subsection NE, Class MC Vessels, 1974 Edition through Summer 1977 Addenda.

(3)4. TES Technical Report TR-5319-1, Rev. 2, Mark I Plant Unique Analysis for Vermont Yankee, November 30, 1983.

VENT PIPE/SRV(A,B,C,D) AT EDGE OF 3/4" THK PAD (ELEMENT 7),
RANGE OF INDICATION SIZES (FILE NAME:VYPAD.MCD)

PERMISSIBLE REDUCTION IN THICKNESS:

Primary Membrane Stress (Pmax,psi): $Pmax := 27922$

Minimum Shell Thickness (T,in): $T := 0.25$

Shell Mean Radius (R,in): $R := 40.625$

Allowable Stress (S,psi): $S := 19300$

Equivalent Pressure: $PO := Pmax \cdot \frac{T}{R}$ $PO = 171.828$

Indication Diameter Factor (X): $X := \frac{1}{T} \cdot \sqrt{\frac{PO}{S}}$ $X = 0.377$

NORMILIZATION OF THICKNESS REDUCTION CURVE:

$L := 0 ..11$

$K1_L :=$	$K2_L :=$
0.0	1.271
0.1	1.072
0.2	0.899
0.3	0.759
0.4	0.643
0.5	0.535
0.6	0.419
0.7	0.284
0.8	0.126
0.844	0.0
0.9	0.0
1.0	0.0

K1 = d/T

K2 = (D/T)*[(PO/S)**1/2]

Depth of Indication (d,in): $d_L := K1_L \cdot T$

Diameter of Indication per F: $DxF_L := \frac{K2_L}{X}$

VENT PIPE/SRV(A,B,C,D) AT EDGE OF 3/4" THK PAD (ELEMENT 7),
RANGE OF INDICATION SIZES (FILE NAME:VYPAD.MCD)

Depth and Diameter of Indication:

d_L	DxF_L
0	3.368
0.025	2.84
0.05	2.382
0.075	2.011
0.1	1.704
0.125	1.418
0.15	1.11
0.175	0.752
0.2	0.334
0.211	0
0.225	0
0.25	0

GRAPH - DIAMETER OF INDICATION (D,in) VS DEPTH OF INDICATION (d,in)

Thickness available for corrosion (Tcor,in): Tcor := 0.009

$$d_L := \text{if}\left[d_L < Tcor, Tcor, d_L\right]$$

For Maximum Stressed Shell Element (F = 1.0)

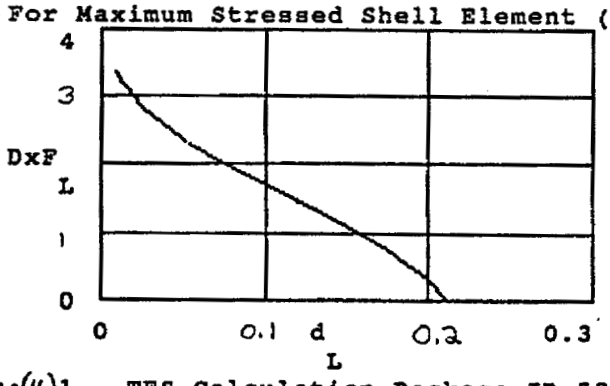

References:(1L)1. TES Calculation Package ID 5319-28, Rev. 0, "SRV - Vent Pipe Penetration Stress Evaluation -Vermont Yankee - S/RV Lines A to D," May 3, 1983.

(6)2. Mark I Containment Program, Structural Acceptance Criteria, Plant Unique Analysis Application Guide, Document Number NEDO-24583-1, October 1979.

(4)3. ASME Boiler And Pressure Vessel Code, Section III, Division 1, Subsection NE, Class MC Vessels, 1974 Edition through Summer 1977 Addenda.

(3)4. TES Technical Report TR-5319-1, Rev. 2, Mark I Plant Unique Analysis for Vermont Yankee, November 30, 1983.

TELEDYNE ENGINEERING SERVICES

BY MEK DATE 12-17-90
CHKD. BY RAE DATE 12-17-90

VERMONT YANKEE
SHELL THICKNESS REQUIREMENTS
CALCULATION PACKAGE 7426-1

SHEET NO. B-40 OF 42
PROJ. NO. 7426

VERMONT YANKEE - VENT PIPE/SRV LINES A, B, C, AND D
LOWER SUPPORT ATTACHMENT

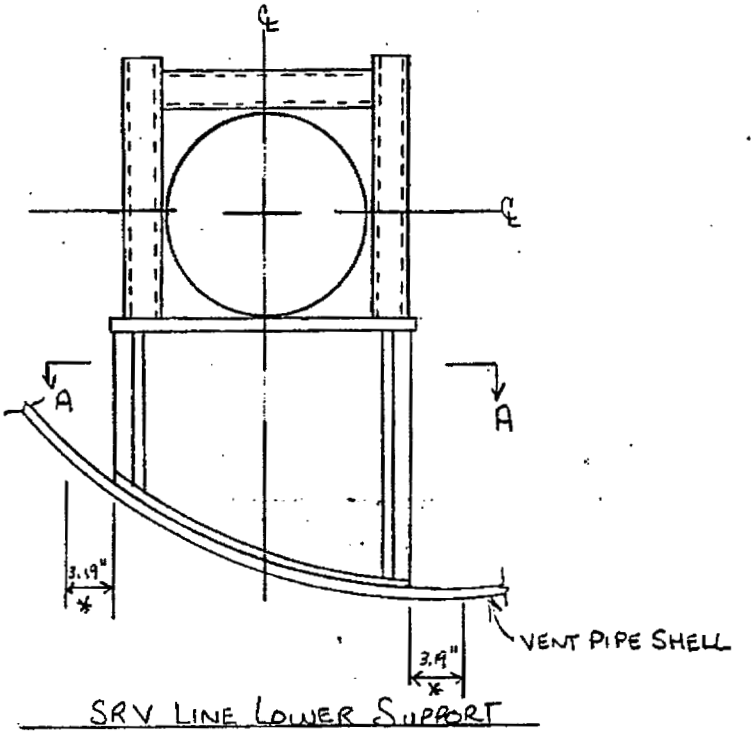

SRV LINE LOWER SUPPORT

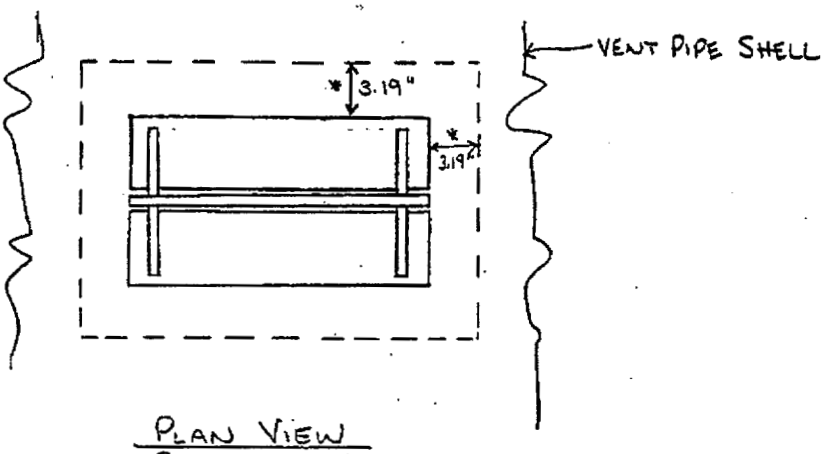

PLAN VIEW
SECTION A-A

* LOCAL REGIONS = $1.0\sqrt{RT}$ = 3.19"

TELEDYNE ENGINEERING SERVICES

BY MEK DATE 12-18-90
CHKD. BY RFE DATE 12-18-90

VERMONT YANKEE
SHELL THICKNESS REQUIREMENTS
CALCULATION PACKAGE 7426-1

SHEET NO. B-41 OF 42
PROJ. NO. 7426

VENT PIPE/SRV(A,B,C,D) AT LOWER SUPPORT, RANGE OF INDICATION SIZES
(FILE NAME:VYSUP.MCD)

PERMISSIBLE REDUCTION IN THICKNESS:

Primary Membrane Stress (Pmax,psi): $Pmax := 27886$

Minimum Shell Thickness (T,in): $T := 0.25$

Shell Mean Radius (R,in): $R := 40.625$

Allowable Stress (S,psi): $S := 19300$

Equivalent Pressure: $PO := Pmax \cdot \frac{T}{R}$ $PO = 171.606$

Indication Diameter Factor (X): $X := \frac{1}{T} \cdot \sqrt{\frac{PO}{S}}$ $X = 0.377$

NORMILIZATION OF THICKNESS REDUCTION CURVE:

$L := 0 .. 11$

$K1_L :=$	$K2_L :=$
0.0	1.271
0.1	1.072
0.2	0.899
0.3	0.759
0.4	0.643
0.5	0.535
0.6	0.419
0.7	0.284
0.8	0.126
0.844	0.0
0.9	0.0
1.0	0.0

K1 = d/T

K2 = (D/T)*[(PO/S)**1/2]

Depth of Indication (d,in): $d_L := K1_L \cdot T$

Diameter of Indication per F: $DxF_L := \frac{K2_L}{X}$

TELEDYNE ENGINEERING SERVICES

BY MEK DATE 12-18-90
CHKD. BY RAE DATE 12-18-90

VERMONT YANKEE
SHELL THICKNESS REQUIREMENTS
CALCULATION PACKAGE 7426-1

SHEET NO. B-42 OF 42
PROJ. NO. 7426

VENT PIPE/SRV(A,B,C,D) AT LOWER SUPPORT, RANGE OF INDICATION SIZES
(FILE NAME:VYSUP.MCD)

Depth and Diameter of Indication:

d_L	DxF_L
0	3.37
0.025	2.842
0.05	2.383
0.075	2.012
0.1	1.705
0.125	1.418
0.15	1.111
0.175	0.753
0.2	0.334
0.211	0
0.225	0
0.25	0

GRAPH - DIAMETER OF INDICATION (D,in) VS DEPTH OF INDICATION (d,in)

Thickness available for corrosion (Tcor,in): Tcor := 0.009

$$d_L := \text{if}\left[d_L < Tcor, Tcor, d_L\right]$$

For Maximum Stressed Shell Element (F = 1.0)

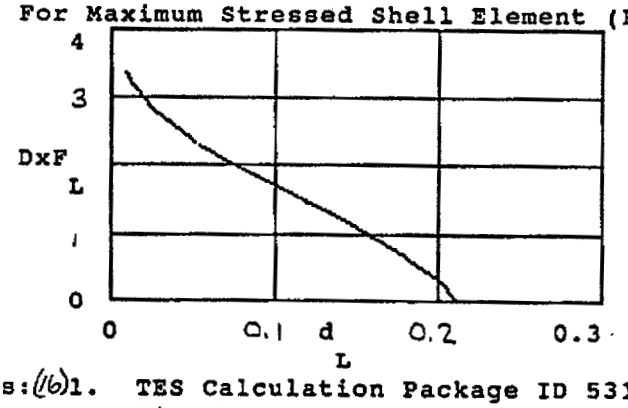

References: (16)1. TES Calculation Package ID 5319-28, Rev. 0, "SRV - Vent Pipe Penetration Stress Evaluation -Vermont Yankee - S/RV Lines A to D," May 3, 1983.

(6)2. Mark I Containment Program, Structural Acceptance Criteria, Plant Unique Analysis Application Guide, Document Number NEDO-24583-1, October 1979.

(4)3. ASME Boiler And Pressure Vessel Code, Section III, Division 1, Subsection NE, Class MC Vessels, 1974 Edition through Summer 1977 Addenda.

(3)4. TES Technical Report TR-5319-1, Rev. 2, Mark I Plant Unique Analysis for Vermont Yankee, November 30, 1983.

APPENDIX C

SAMPLE TORUS SHELL CALCULATIONS FOR POSTULATED INDICATIONS

TELEDYNE ENGINEERING SERVICES

BY RJC DATE 12-19-90
CHKD. BY RHB DATE 12-21-90

VERMONT YANKEE
SHELL THICKNESS REQUIREMENTS
CALCULATION PACKAGE 7426-1

SHEET NO. C-2 OF 16
PROJ. NO. 7426

VERMONT YANKEE TORUS SHELL
TORUS SHELL INDICATION SAMPLE CALCULATION #1

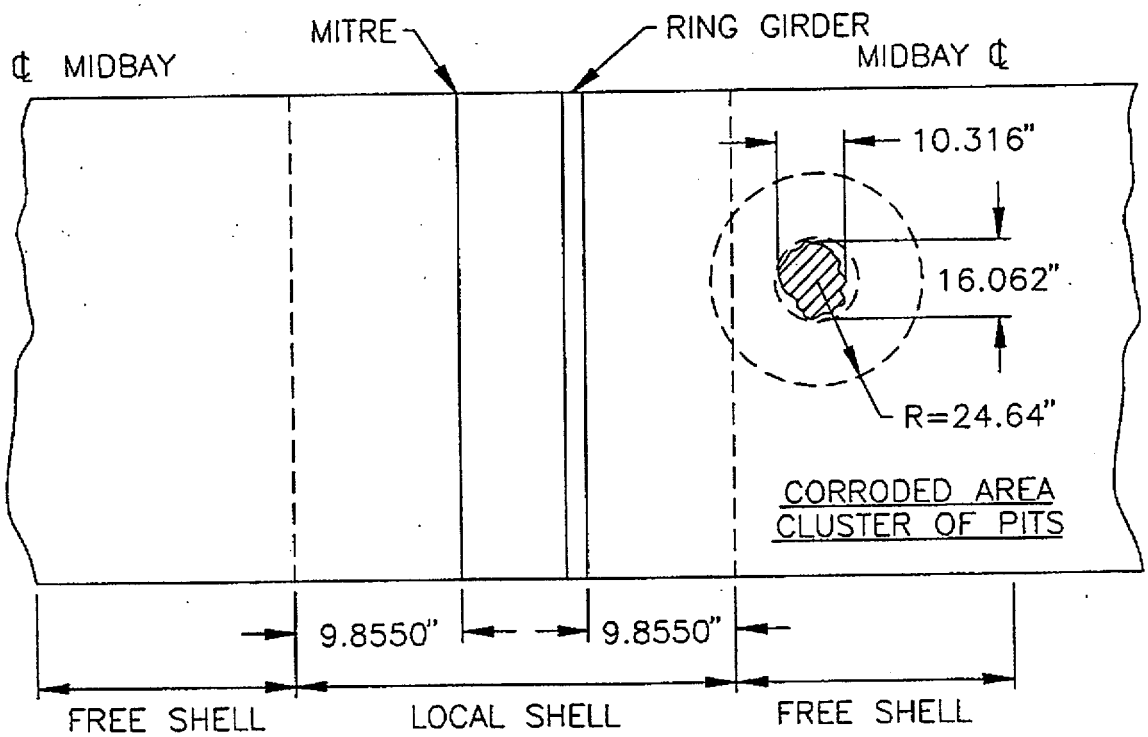

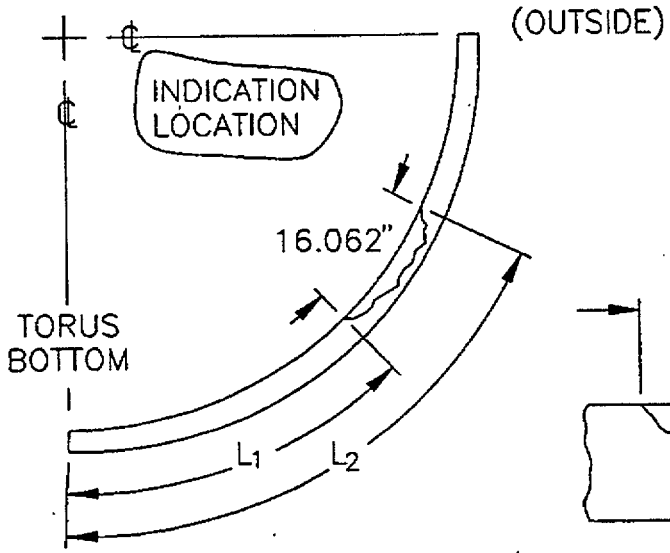

$L_1 = 71.258"$

$L_2 = 87.320"$

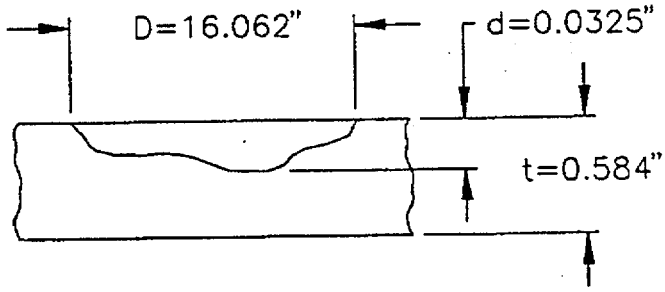

TELEDYNE ENGINEERING SERVICES

BY RKE DATE 12-19-90
CHKD. BY R.H.B. DATE 12-21-90

VERMONT YANKEE
SHELL THICKNESS REQUIREMENTS
CALCULATION PACKAGE 7426-1

SHEET NO. C-3 OF 16
PROJ. NO. 7426

VERMONT YANKEE TORUS SHELL
TORUS SHELL INDICATION SAMPLE CALCULATION #1

STEP 1 Circumscribed diameter of indication area
D = 16.062"

STEP 2 Maximum depth of indication d = 0.0325"

STEP 3 Confirm that no additional indications are found within a 24.64" radius. / confirmed.

STEP 4 If Step 3 is violated, re-circumscribe the area and re-determine "D" and "d"

STEP 5 Determine arc region(s) from appropriate Figure 6 or 7.

/ Free shell region, Figure 6
____ Local shell region, Figure 7

L_1 = 71.258" Lies in Arc Region S 4
L_2 = 87.320" Lies in Arc Region S 4

S 4 Permissible Corroded Thickness, t_{cor} = 0.232"
S 4 Permissible Corroded Thickness, t_{cor} = 0.232"

STEP 6 Check if measured indication depth is less than the permissible corroded thickness (t_{cor}).

Permissible Corroded Thickness = t_{cor} = 0.232"
Indication Depth = d = 0.0325"

/, $d \leq t_{cor}$, then indication is acceptable, stop, skip remaining steps.

____, $d > t_{cor}$, then continue.

TELEDYNE ENGINEERING SERVICES

BY RKE DATE 12-19-90
CHKD. BY RHB DATE 12-21-90

VERMONT YANKEE
SHELL THICKNESS REQUIREMENTS
CALCULATION PACKAGE 7426-1

SHEET NO. C-4 OF 16
PROJ. NO. 7426

VERMONT YANKEE TORUS SHELL
TORUS SHELL INDICATION SAMPLE CALCULATION #1

STEP 7 Determine circumscribed diameter multiplier.
(F) From the table of Figure 8 or 9.

_____ Free Shell Region, Figure 8
_____ Ring Girder (Local) Shell Region, Figure 9

S___, Factor "F" = _____
S___, Factor "F" = _____

Largest multiplier factor "F" = _____

STEP 8 Determine equivalent diameter (D′) which circumscribes the indications.

D′ = D x F
D′ = _____ x _____ = _____

STEP 9 Using D′ and appropriate Figure 8 or 9, determine the allowable indication depth (d′).

_____ Free Shell, Figure 8
_____ Local Shell, Figure 9

Allowable Depth d′ = _____

* Adjust allowable depth (d'_{adj}) to account for reduced wall thickness measured.

Original Wall thickness, T_0 = 0.584"
Measured Wall Thickness, t = _____

Adjusted d′ = d′ - (T_0 - t) = _____
Indication Depth, d = _____

_____, d ≤ Adjusted d′, Indication is Acceptable.
_____, d > Adjusted d′, Weld Repair Required.

TELEDYNE ENGINEERING SERVICES

BY RHE DATE 12-19-90
CHKD. BY R.H.B DATE 12-21-90

VERMONT YANKEE
SHELL THICKNESS REQUIREMENTS
CALCULATION PACKAGE 7426-1

SHEET NO. C-5 OF 16
PROJ. NO. 7426

VERMONT YANKEE TORUS SHELL
TORUS SHELL INDICATION SAMPLE CALCULATION #2

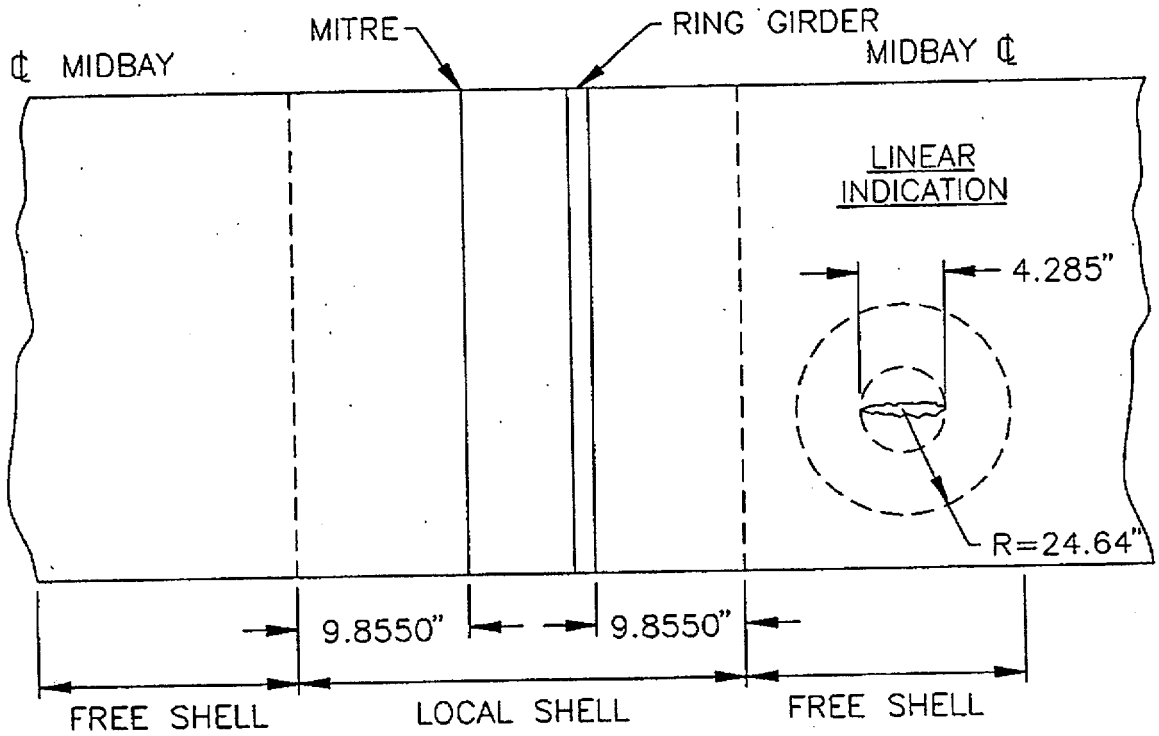

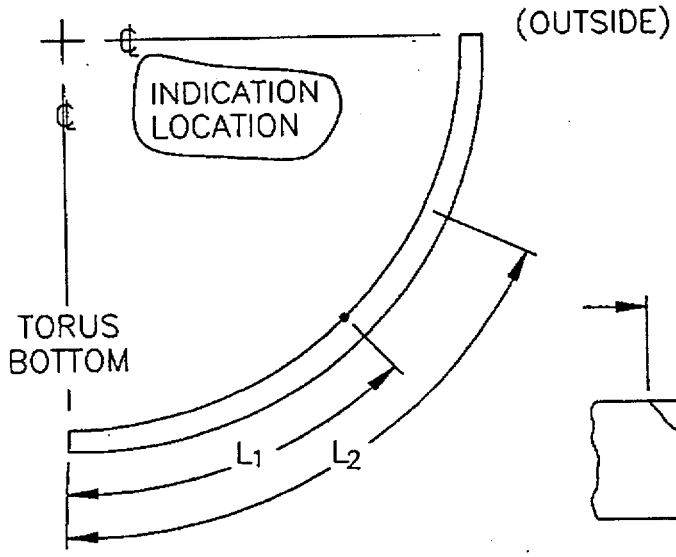

$L_1 = 133.122"$

$L_2 = N/A$

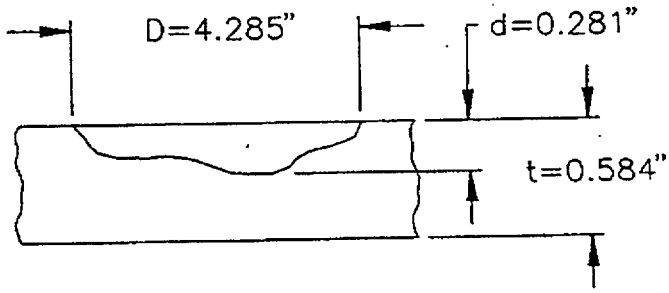

TELEDYNE ENGINEERING SERVICES

BY RKE DATE 12-19-90
CHKD. BY PHB DATE 12-21-90

VERMONT YANKEE
SHELL THICKNESS REQUIREMENTS
CALCULATION PACKAGE 7426-1

SHEET NO. C-6 OF 16
PROJ. NO. 7426

VERMONT YANKEE TORUS SHELL
TORUS SHELL INDICATION SAMPLE CALCULATION #2

STEP 1 Circumscribed diameter of indication area
D = 4.285"

STEP 2 Maximum depth of indication d = 0.281"

STEP 3 Confirm that no additional indications are found within a 24.64" radius. / confirmed.

STEP 4 If Step 3 is violated, re-circumscribe the area and re-determine "D" and "d"

STEP 5 Determine arc region(s) from appropriate Figure 6 or 7.

/ Free shell region, Figure 6
____ Local shell region, Figure 7

L_1 = 133.122" Lies in Arc Region S 3
L_2 = N/A Lies in Arc Region S___

S 3 Permissible Corroded Thickness, t_{cor} = 0.279"/0.315"
S___ Permissible Corroded Thickness, t_{cor} = _____

STEP 6 Check if measured indication depth is less than the permissible corroded thickness (t_{cor}).

$$\text{Interpolated } t_{cor} = .279" + (.315-.279)\frac{(133.122"-115.89")}{(173.84"-115.89")} = .290"$$

Permissible Corroded Thickness = t_{cor} = 0.290"
Indication Depth = d = 0.281"

/, $d \leq t_{cor}$, then indication is acceptable, stop, skip remaining steps.

____, $d > t_{cor}$, then continue.

TELEDYNE ENGINEERING SERVICES

BY RHE DATE 12-19-90
CHKD. BY RHB DATE 12-21-90

VERMONT YANKEE
SHELL THICKNESS REQUIREMENTS
CALCULATION PACKAGE 7426-1

SHEET NO. C-7 OF 16
PROJ. NO. 7426

VERMONT YANKEE TORUS SHELL
TORUS SHELL INDICATION SAMPLE CALCULATION #2

STEP 7 Determine circumscribed diameter multiplier.
(F) From the table of Figure 8 or 9.

_____ Free Shell Region, Figure 8
_____ Ring Girder (Local) Shell Region, Figure 9

S___, Factor "F" = _____
S___, Factor "F" = _____

Largest multiplier factor "F" = _____

STEP 8 Determine equivalent diameter (D′) which circumscribes the indications.

D′ = D x F
D′ = _____ x _____ = _____

STEP 9 Using D′ and appropriate Figure 8 or 9, determine the allowable indication depth (d′).

_____ Free Shell, Figure 8
_____ Local Shell, Figure 9

Allowable Depth d′ = _____

* Adjust allowable depth (d'_{adj}) to account for reduced wall thickness measured.

Original Wall thickness, T_0 = 0.584"
Measured Wall Thickness, t = _____

Adjusted d′ = d′ - (T_0 - t) = _____
Indication Depth, d = _____

_____, d ≤ Adjusted d′, Indication is Acceptable.
_____, d > Adjusted d′, Weld Repair Required.

TELEDYNE ENGINEERING SERVICES

BY RJC DATE 12-19-90
CHKD. BY R.H.B. DATE 12-21-90

VERMONT YANKEE
SHELL THICKNESS REQUIREMENTS
CALCULATION PACKAGE 7426-1

SHEET NO. C-8 OF 16
PROJ. NO. 7426

VERMONT YANKEE TORUS SHELL
TORUS SHELL INDICATION SAMPLE CALCULATION #3

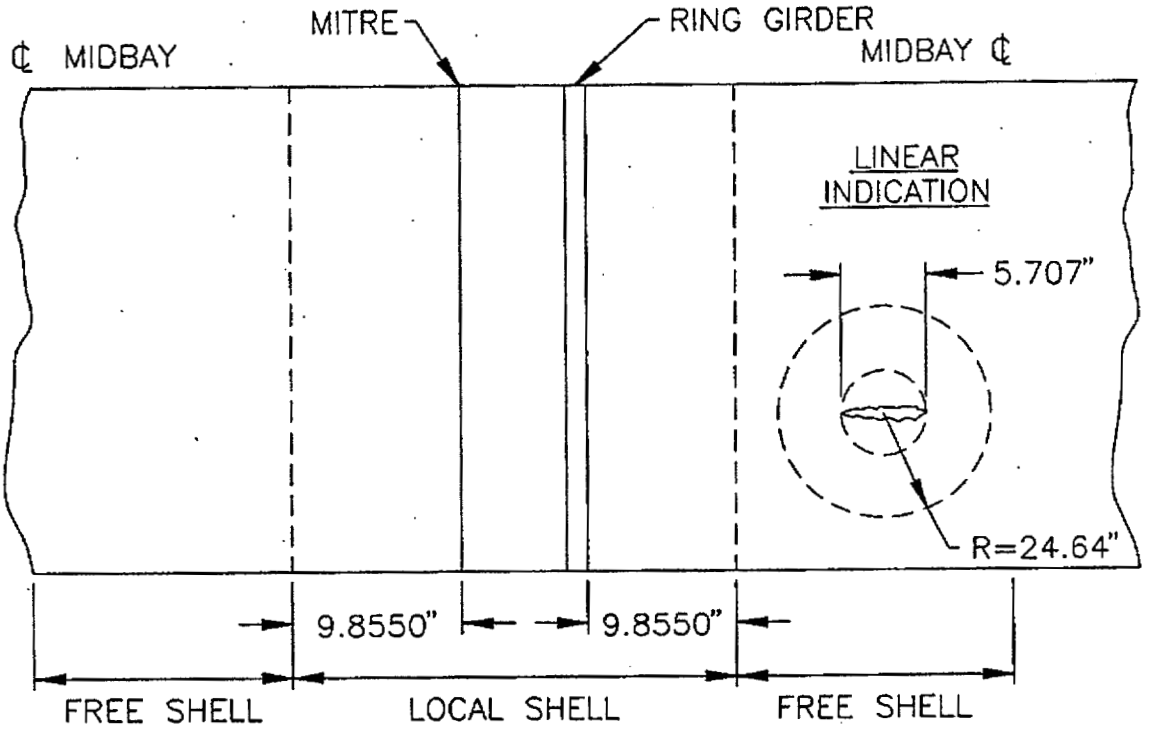

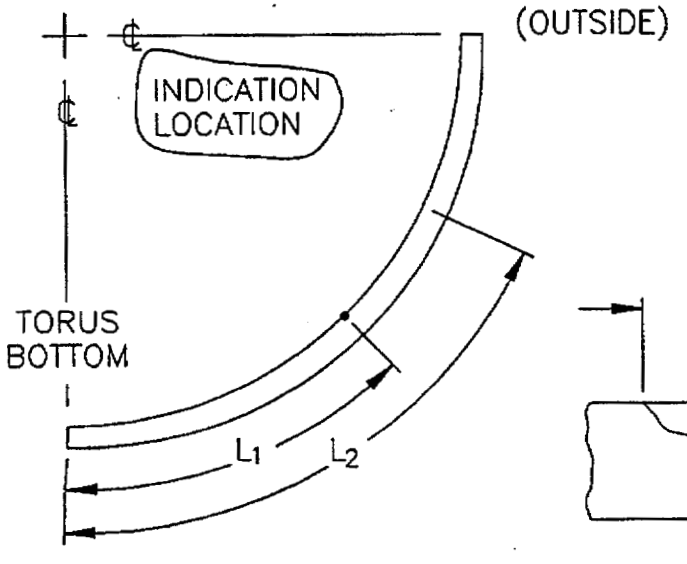

L_1 =55.125"
L_2=N/A

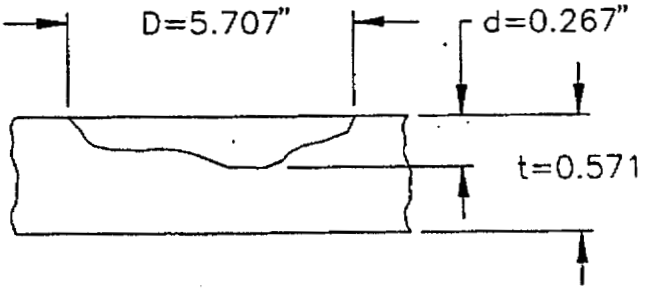

TELEDYNE ENGINEERING SERVICES

BY RKE DATE 12-19-90
CHKD. BY R.H.B. DATE 12-21-90

VERMONT YANKEE
SHELL THICKNESS REQUIREMENTS
CALCULATION PACKAGE 7426-1

SHEET NO. C-9 OF 16
PROJ. NO. 7426

VERMONT YANKEE TORUS SHELL
TORUS SHELL INDICATION SAMPLE CALCULATION #3

STEP 1 Circumscribed diameter of indication area
D = 5.707"

STEP 2 Maximum depth of indication d = 0.267"

STEP 3 Confirm that no additional indications are found within a 24.64" radius. / confirmed.

STEP 4 If Step 3 is violated, re-circumscribe the area and re-determine "D" and "d"

STEP 5 Determine arc region(s) from appropriate Figure 6 or 7.

/ Free shell region, Figure 6
____ Local shell region, Figure 7

L_1 = 55.125" Lies in Arc Region S 5
L_2 = N/A Lies in Arc Region S___

S 5 Permissible Corroded Thickness, t_{cor} = 0.225"/0.232"
S___ Permissible Corroded Thickness, t_{cor} = _____

STEP 6 Check if measured indication depth is less than the permissible corroded thickness (t_{cor}).

Permissible Corroded Thickness = t_{cor} = 0.225"/0.232"
Indication Depth = d = 0.267"

_____, $d \leq t_{cor}$, then indication is acceptable, stop, skip remaining steps.

/, $d > t_{cor}$, then continue.

TELEDYNE ENGINEERING SERVICES

BY RM DATE 12-19-90
CHKD. BY RHB DATE 12-21-90

VERMONT YANKEE
SHELL THICKNESS REQUIREMENTS
CALCULATION PACKAGE 7426-1

SHEET NO. C-10 OF 16
PROJ. NO. 7426

VERMONT YANKEE TORUS SHELL
TORUS SHELL INDICATION SAMPLE CALCULATION #3

STEP 7 Determine circumscribed diameter multiplier.
(F) From the table of Figure 8 or 9.

/ Free Shell Region, Figure 8
___ Ring Girder (Local) Shell Region, Figure 9

S 5, Factor "F" = 0.957
S___, Factor "F" = _____

Largest multiplier factor "F" = 0.957

STEP 8 Determine equivalent diameter (D') which circumscribes the indications.

D' = D x F
D' = 5.707" x 0.957 = 5.462"

STEP 9 Using D' and appropriate Figure 8 or 9, determine the allowable indication depth (d').

/ Free Shell, Figure 8
___ Local Shell, Figure 9

Allowable Depth d' = 0.368"

* Adjust allowable depth (d'_{adj}) to account for reduced wall thickness measured.

Original Wall thickness, T_0 = 0.584"
Measured Wall Thickness, t = 0.571"

Adjusted d' = d' - (T_0 - t) = 0.355"
Indication Depth, d = 0.267"

/, d ≤ Adjusted d', Indication is Acceptable.
___, d > Adjusted d', Weld Repair Required.

TELEDYNE ENGINEERING SERVICES

BY RK DATE 12-19-90
CHKD. BY R.H.B. DATE 12-21-90

VERMONT YANKEE
SHELL THICKNESS REQUIREMENTS
CALCULATION PACKAGE 7426-1

SHEET NO. C-11 OF 16
PROJ. NO. 7426

VERMONT YANKEE TORUS SHELL
TORUS SHELL INDICATION SAMPLE CALCULATION #4

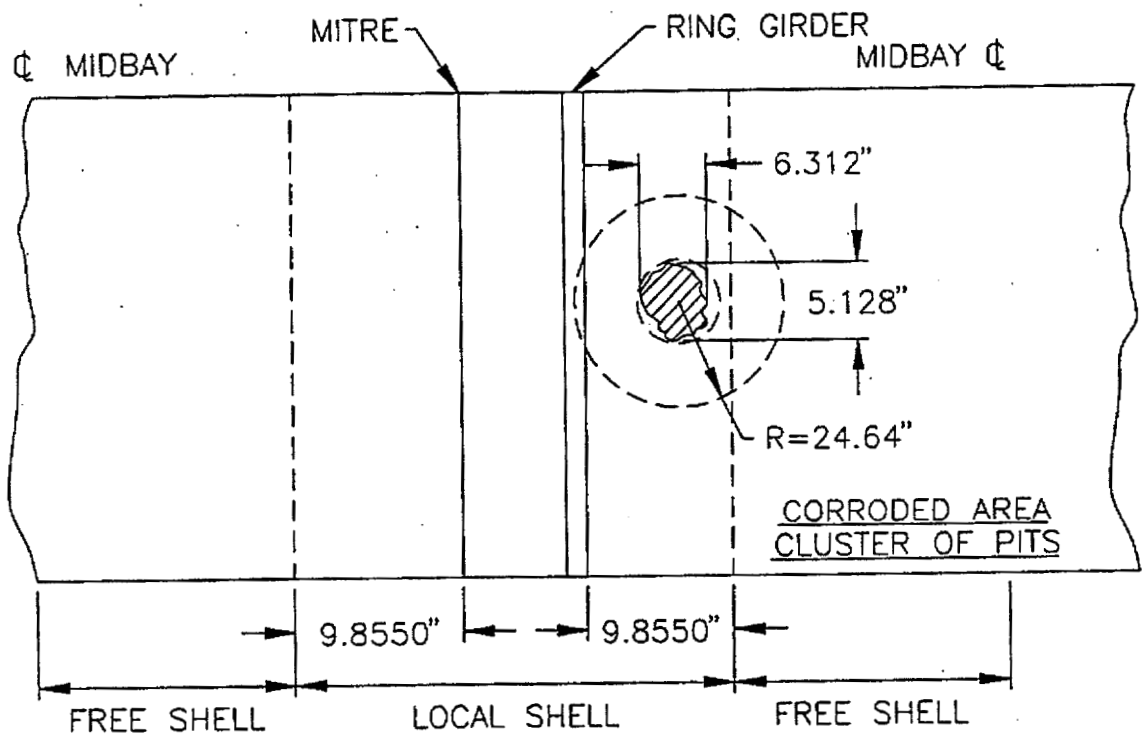

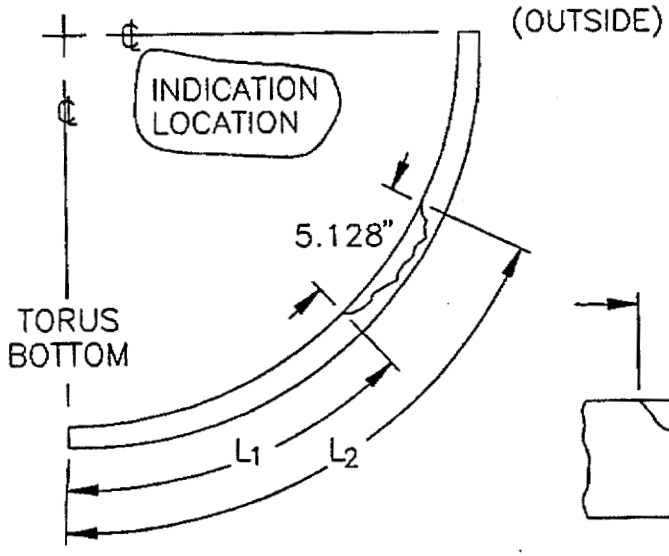

$L_1 = 38.125"$

$L_2 = 43.253"$

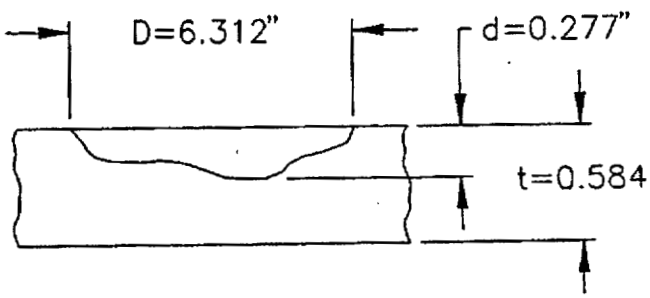

TELEDYNE ENGINEERING SERVICES

BY [illegible] DATE 12-19-90
CHKD. BY R.H.B. DATE 12-21-90

VERMONT YANKEE
SHELL THICKNESS REQUIREMENTS
CALCULATION PACKAGE 7426-1

SHEET NO. C-12 OF 16
PROJ. NO. 7426

VERMONT YANKEE TORUS SHELL
TORUS SHELL INDICATION SAMPLE CALCULATION #4

STEP 1 Circumscribed diameter of indication area
D = 6.312"

STEP 2 Maximum depth of indication d = 0.277"

STEP 3 Confirm that no additional indications are found within a 24.64" radius. / confirmed.

STEP 4 If Step 3 is violated, re-circumscribe the area and re-determine "D" and "d"

STEP 5 Determine arc region(s) from appropriate Figure 6 or 7.

____ Free shell region, Figure 6
/ Local shell region, Figure 7

L_1 = 38.125" Lies in Arc Region S 5
L_2 = 43.253" Lies in Arc Region S 5

S 5 Permissible Corroded Thickness, t_{cor} = 0.450"/0.471"
S 5 Permissible Corroded Thickness, t_{cor} = 0.450"/0.471"

STEP 6 Check if measured indication depth is less than the permissible corroded thickness (t_{cor}).

Permissible Corroded Thickness = t_{cor} = 0.450"/0.471"
Indication Depth = d = 0.277"

/, $d \leq t_{cor}$, then indication is acceptable, stop, skip remaining steps.

____, $d > t_{cor}$, then continue.

TELEDYNE ENGINEERING SERVICES

BY RAE DATE 12-19-90
CHKD. BY R.H.B. DATE 12-21-90

VERMONT YANKEE
SHELL THICKNESS REQUIREMENTS
CALCULATION PACKAGE 7426-1

SHEET NO. C-13 OF 16
PROJ. NO. 7426

VERMONT YANKEE TORUS SHELL
TORUS SHELL INDICATION SAMPLE CALCULATION #4

STEP 7 Determine circumscribed diameter multiplier.
(F) From the table of Figure 8 or 9.

_____ Free Shell Region, Figure 8
_____ Ring Girder (Local) Shell Region, Figure 9

S___, Factor "F" = _____
S___, Factor "F" = _____

Largest multiplier factor "F" = _____

STEP 8 Determine equivalent diameter (D′) which circumscribes the indications.

D′ = D x F
D′ = _____ x _____ = _____

STEP 9 Using D′ and appropriate Figure 8 or 9, determine the allowable indication depth (d′).

_____ Free Shell, Figure 8
_____ Local Shell, Figure 9

Allowable Depth d′ = _____

* Adjust allowable depth (d'_{adj}) to account for reduced wall thickness measured.

Original Wall thickness, T_0 = 0.584"
Measured Wall Thickness, t = _____

Adjusted d′ = d′ - (T_0 - t) = _____
Indication Depth, d = _____

_____, d ≤ Adjusted d′, Indication is Acceptable.
_____, d > Adjusted d′, Weld Repair Required.

TELEDYNE ENGINEERING SERVICES

BY RTE DATE 12-19-90
CHKD. BY R.H.B DATE 12-21-90

VERMONT YANKEE
SHELL THICKNESS REQUIREMENTS
CALCULATION PACKAGE 7426-1

SHEET NO. C-14 OF 16
PROJ. NO. 7426

VERMONT YANKEE TORUS SHELL
TORUS SHELL INDICATION SAMPLE CALCULATION #5

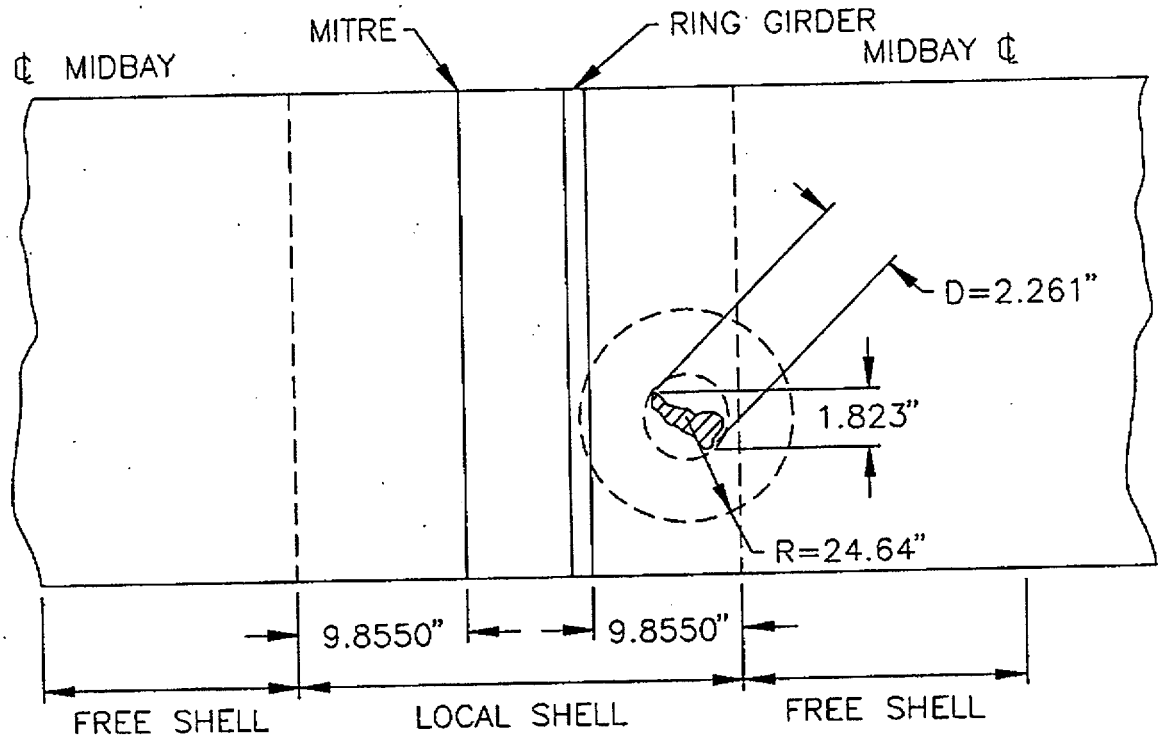

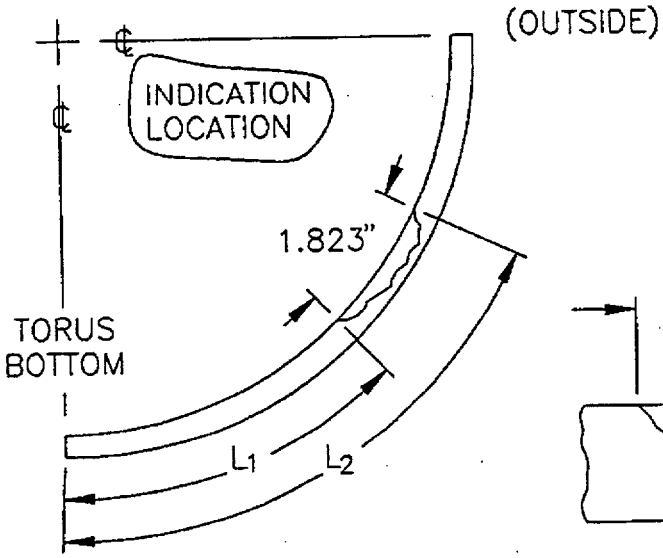

$L_1 = 221.75"$

$L_2 = 223.573"$

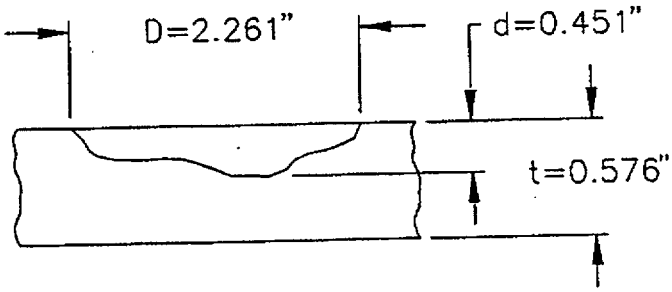

TELEDYNE ENGINEERING SERVICES

BY RKE DATE 12-19-90
CHKD. BY EHB DATE 12-21-90

VERMONT YANKEE
SHELL THICKNESS REQUIREMENTS
CALCULATION PACKAGE 7426-1

SHEET NO. C-15 OF 16
PROJ. NO. 7426

VERMONT YANKEE TORUS SHELL
TORUS SHELL INDICATION SAMPLE CALCULATION #5

STEP 1 Circumscribed diameter of indication area
D = 2.261"

STEP 2 Maximum depth of indication d = 0.451"

STEP 3 Confirm that no additional indications are found within a 24.64" radius. / confirmed.

STEP 4 If Step 3 is violated, re-circumscribe the area and re-determine "D" and "d"

STEP 5 Determine arc region(s) from appropriate Figure 6 or 7.

____ Free shell region, Figure 6
/ Local shell region, Figure 7

L_1 = 221.75" Lies in Arc Region S 2
L_2 = 223.573" Lies in Arc Region S 1

S 2 Permissible Corroded Thickness, t_{cor} = 0.460"/0.434"
S 1 Permissible Corroded Thickness, t_{cor} = 0.434"

STEP 6 Check if measured indication depth is less than the permissible corroded thickness (t_{cor}).

Permissible Corroded Thickness = t_{cor} = 0.434"
Indication Depth = d = 0.451"

_____, $d \leq t_{cor}$, then indication is acceptable, stop, skip remaining steps.

/, $d > t_{cor}$, then continue.

TELEDYNE ENGINEERING SERVICES

BY RAE DATE 12-21-90
CHKD. BY RHB DATE 12-21-90

VERMONT YANKEE
SHELL THICKNESS REQUIREMENTS
CALCULATION PACKAGE 7426-1

SHEET NO. C-16 OF 16
PROJ. NO. 7426

VERMONT YANKEE TORUS SHELL
TORUS SHELL INDICATION SAMPLE CALCULATION #5

STEP 7 Determine circumscribed diameter multiplier.
(F) From the table of Figure 8 or 9.

____ Free Shell Region, Figure 8
/ Ring Girder (Local) Shell Region, Figure 9

S 2 , Factor "F" = 0.830
S 1 , Factor "F" = 0.913

Largest multiplier factor "F" = 0.913

STEP 8 Determine equivalent diameter (D′) which circumscribes the indications.

D′ = D x F
D′ = 2.261" x 0.913 = 2.064"

STEP 9 Using D′ and appropriate Figure 8 or 9, determine the allowable indication depth (d′).

____ Free Shell, Figure 8
/ Local Shell, Figure 9

Allowable Depth d′ = 0.461"

* Adjust allowable depth (d'_{adj}) to account for reduced wall thickness measured.

Original Wall thickness, T_0 = 0.584"
Measured Wall Thickness, t = 0.576"

Adjusted d′ = d′ - (T_0 - t) = 0.453"
Indication Depth, d = 0.451"

/ , d ≤ Adjusted d′, Indication is Acceptable.
____, d > Adjusted d′, Weld Repair Required.

VYC 1032 REV. 1
ATTACHMENT B
TOTAL PAGES = 58
INCLUDES COVER

TELEDYNE ENGINEERING SERVICES
CONTROLLED
DOCUMENT
TES PROJ. NO. 7426
DATE 11/22/91

VYC-1032 ATTACHMENT C

TELEDYNE
ENGINEERING SERVICES

VERIFICATION AND DOCUMENT RELEASE

PROJECT NO.	7426	DATE	11-22-91
DOCUMENT ID NO.	7426-2	REV. NO.	1
TYPE OF DOCUMENT	CALCULATION	NUMBERS OF PAGES	57

TITLE

Calculation of Stress Intensification Factors for the Torus Vent Pipe/Header Intersection for Vermont Yankee

REV DESCRIPTION

Editorial changes per ECO No. 8919

THE FOLLOWING COMPUTER RUNS APPLY TO THIS DOCUMENT:

	RUN ID	DATE TIME	PROGRAM NAME/VERSION	SOFTWARE ERROR CHECK
1.	YAK.DAT	12/20/90 10:38:15	ABAQUS 4-8-5	PHH
2.				
3.				
4.				
5.				
6.				

*** NOTE: Computer Output Filed on TK-50 Tape. ***
If more space is required, attach additional pages.

ORIGINATOR [signature] DATE 11-21-91

CHECKER Richard A Enos DATE 11-21-91

THIS DOCUMENT HAS BEEN VERIFIED AND IS IN COMPLIANCE WITH THE REQUIREMENTS OF THE TES QUALITY ASSURANCE PROGRAM.

VERIFIER [signature] DATE 11/22/91

APPROVED FOR RELEASE

PROJECT MANAGER Richard A Enos DATE 11-22-91

QAE [signature] DATE 11-22-91

VYC-1032 ATTACHMENT C

CALCULATION PACKAGE 7426-2

Calculation of Stress Intensification
Factors for the Torus Vent Pipe/Header Intersection
for Vermont Yankee

LIST OF REVISIONS

Revision	Date	Description of Revision
0	12-27-90	Original Issue
1	11-22-91	Added LIST OF REVISIONS, Page 1A. Page 16, Figure 3.4, relocated T_{cor} line and arrow to align with the 0.077" thickness location.

VYC-1032 ATTACHMENT C

TABLE OF CONTENTS

		Page
1.0	INTRODUCTION	3
2.0	BACKGROUND	4
3.0	ANALYTICAL METHOD	5
	3.1 General	5
	3.2 Analytical Model	5
	3.3 Stress Intensification Factors	6
	3.4 Vent Header Intersection Stress Intensities	7
	3.5 Vent Pipe/Header Intersection Thickness Requirements	8
4.0	REFERENCES	9
	APPENDIX A - FINITE-ELEMENT ANALYSIS OF TYPE II VENT PIPE/HEADER INTERSECTION	20
	APPENDIX B - CHECK OF THE COMPUTER MODEL	38
	APPENDIX C - PERMISSIBLE CORROSION ALLOWANCES FOR THE VENT PIPE/HEADER INTERSECTION	41

VYC-1032 ATTACHMENT C

1.0 INTRODUCTION

The Vermont Yankee Nuclear Station has recently determined that it is necessary to extend the remaining life prediction of the Mark I Torus Suppression Chamber Vent Pipe/Header Intersection with respect to wall thinning due to anticipated overall corrosion. The thickness requirements were previously based on vent header stress results calculated from generically derived stress intensification factors. These results are considered to be overly conservative for the thickness requirements in more moderately stressed regions of the vent header. In this context, TES has developed stress intensification factors specific to the various structural elements of the vent header and in particular the region which is most affected by corrosion. Quantitative results of this analysis are presented in this report as well as the methodology used to develop these factors.

VYC-1032 ATTACHMENT C

2.0 BACKGROUND

The Mark I Program was completed with the most efficient methodology available for demonstrating Code compliance, while minimizing cost and reducing the overall schedule requirements.

However, TES believes that Stress Intensification Factors (SIF's) developed by finite-element analysis for the Mark I Program by Bechtel and reported by General Electric in GE NEDE-21968, "Analysis of Vent Pipe - Ring-Header Intersections," April 1979, Ref. 1.0, contained substantial conservatisms with regard to many regions of the vent header. The intent of the SIF's was that they be used to factor the mechanical and pressure stresses in the torus ring header adjacent to the vent header to determine the maximum combined vent header shell stress intensity. These SIF's eliminated the need for a detailed finite-element shell model of the entire vent system. The plant specific modelling effort for the vent system was completed using the simple beam model representation shown in Figure 2-1 reducing man power and cost. This approach worked well for the demonstration of overall Code compliance, but the shortcoming with this approach is that the detailed vent header stresses in the location of concern with respect to corrosion are unknown. In this analysis the original vent header SIF's are further refined to reduce the level of conservatism present and to provide additional margin on the calculated permissible corroded thicknesses (t_c, corrosion allowance).

VYC-1032 ATTACHMENT C

3.0 ANALYTICAL METHOD

3.1 General

Under the Mark I Program, generic stress analyses using finite-element computer models were performed on the vent intersection types for the various plants. The objective was to generate generic values of stress intensification factors to be used with the plant unique analysis performed using beam models. These factors were applied to the beam stresses and the results used to evaluate the vent pipe-ring header intersection. For the vent header type of intersection which applies to Vermont Yankee, Ref. 1.0, the two factors derived were 6.0 for local membrane stress intensity due to pressure loading and 3.1 for local membrane stress intensity for mechanical loads and moments. These quantities were derived from stresses representative of a combination of the maximum stress point in the header and the governing loading condition. It is the objective of the current analysis to determine specific stress intensification factors for the various structural elements which make up the vent header and which are less highly stressed than the regions adjacent to the stiffeners.

3.2 Analytical Model

The finite element computer model used for the Vermont Yankee vent intersection is shown in Figure 3-1. The finite element computer program ABAQUS developed by Hibbitt, Karlsson and Sorenson, Inc. of Providence, Rhode Island, Ref. 2.0, has been used for the stress analysis calculations. Included in the model are portions of the vent pipe and ring header for attenuation of local effects at the points of load application and restraint.

3.3 Stress Intensification Factors

Stresses in the header are calculated for six forces and moments applied at the ring header and for internal pressure. These are summarized in Table 3-1. For each case, stresses in the various branches of the header are searched for maximum values. These results are tabulated in Tables A-2 through A-5 of Appendix A.3 for each branch of the vent header and the hemispherical head. In addition, the maximum stress intensities are tabulated in Table A-6 for areas immediately adjacent to the stiffeners. The stress intensification factors are then calculated by normalizing to the remote ring header stress (equivalent beam stress) for the corresponding load. The equivalent beam stresses applicable to the Vermont Yankee vent header are obtained from NEDE-21968. The resulting local membrane stress intensification factors are also tabulated in Tables A-2 to A-6 and summarized in Table 3-2.

The SIF's are summarized below for the various segments of the vent header and represent the maximum values obtained when applying the methodology used in the Mark I Program and outlined in NEDE-21968 as follows:

> "... comparison of the tabulated results for unit load cases with those for typical load combinations reveals a simplification which can be made. It can be determined that pool swell load governs vent system response, and that pool swell produces primarily bending moments applied to the intersection. The stress intensification factors calculated for the governing pool swell load combination approximate those due to unit bending moments applied to the ring header in all cases. On this basis, the

following intersection stress intensification factors are recommended for use in vent system design for all applied load combinations."

The SIF's tabulated below were obtained by applying the above methodology to the finite element results reported herein.

	Local Membrane Stress Intensification Factor (SIF)			
	Load or Moment		Pressure	
Location	Maximum Calculated	TES Recommended	Maximum Calculated	TES Recommended
Vent Pipe Branch	1.27	1.3	1.6	1.6
Ring Header Branch	2.3	2.3	2.7	2.7
Vent Head	1.1	1.1	1.1	1.1
Vent Head Branch	1.5	1.5	1.6	1.6
Adjacent to Stiffener	3.1	3.1	3.0	3.0
Mark I Program	3.1		6.0	

The table includes the TES recommended SIF's to be applied to stresses induced by header loads and moments and by internal pressure. This provides a simplification with but a small degree of conservatism. The table also compares the Stress Intensification Factors used for the Mark I Program and those recommended for use in refining the thickness requirements for vent header corrosion.

3.4 Vent Header Intersection Stress Intensities

TES has reviewed the vent system analysis package, TES Document No. 2252-5, Rev. 1, "Vent Header and Intersection with Main Vent, Combined

Loads, Vermont Yankee," Ref. 3.0, to determine the local membrane stress intensity values necessary in establishing the minimum required thickness. The controlling condition for the vent header intersection is Load Combination 19 and the corresponding vent header stress is contained in the above-referenced calculation on Page 25 of 30.

For Load Combination 19 the vent header stresses are:

Forces and Moments	7751 psi
Internal Pressure	817 psi

	Loads and Moments		Internal Pressure		
Vent Header Location	SIF	Vent Stress (psi)	SIF	Vent Stress (psi)	Local Membrane Stress Intensity (psi)
Vent Pipe Branch	1.3	10,100	1.6	1,310	11,400
Ring Header Branch	2.3	17,800	2.7	2,210	20,000
Vent Head	1.1	8,500	1.1	900	9,400
Vent Head Branch	1.5	11,600	1.6	1,310	12,900
Adjacent to Stiffener	3.1	24,000	3.0	2,450	26,500

The allowable Stress Intensity value used in Ref. 3.0 is 1.5 S_m = 28,950 psi.

The maximum membrane stress intensity in the stiffeners for Load Combination 19 is 21,300 psi.

3.5 Vent Pipe/Header Intersection Thickness Requirements

The permissible local reduction in wall thickness for the various regions of the vent pipe/header intersection, as identified in Figure 3.2, are provided in Figures 3.3 through 3.7.

4.0 REFERENCES

1.0 "Analysis of Vent Pipe-Ring Header Intersections," Task No. 4.2.2, Prepared by Bechtel Power Corp. for General Electric Co., Report No. NEDE-21968, April 1979, (No Revision Number).

2.0 ABAQUS computer program, Hibbitt, Karlsson & Sorensen, Inc., Providence Rhode Island, Version 4-8-5.

3.0 TES Document ID No. 2252-5, Rev. 1, "Vent Header and Intersection With Main Vent, Combined Loads, Vermont Yankee."

4.0 CB&I Drawing 213, Revision 0, "Vent Line Header Intersection."

5.0 TES Calculation Package 7426-1, Rev. 0, "Mark I Torus Shell and Vent System Requirements, Vermont Yankee Nuclear Station," Dated December 27, 1990.

6.0 ABAQUS Verification Analysis, CP-7426-3, Rev. 0, Dated December 19, 1990.

7.0 ABAQUS to PATRAN Translator (ABAPAT), Version 3.1, PDA Engineering, Costa Mesa California

8.0 PATRAN Plus, PDA Engineering, Costa Mesa California, Version 2.4.

9.0 ASME Boiler and Pressure Vessel Code, Section III, 1974 Edition, Summer 1977 Addenda.

10.0 ABAQUS Computer Output YANK.DAT, December 20, 1990, 10:38:15.

TABLE 3-1

Load Case	Load Type	Load Magnitude
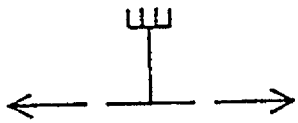	Axial, Fx	1 kip
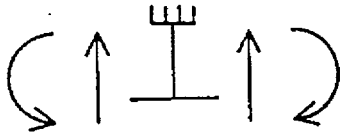	Shear, Fy	1 kip
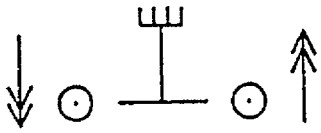	Shear, Fz	1 kip
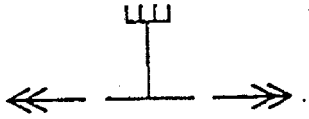	Torsion, Mx	1 in–kip
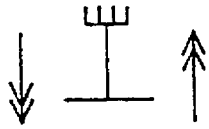	Bending, My	1 in–kip
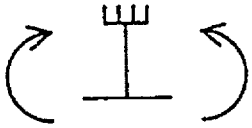	Bending, Mz	1 in–kip
	Pressure, p	1000 psi

Moments applied in combination with shear loads provide pure shear loading at sphere–header intersection.

TABLE 3-2

SUMMARY OF STRESS INTENSIFICATION FACTORS

Load or Moment	Vent Pipe Branch	Ring Header Branch	Vent Head	Vent Head Branch	Adjacent to Stiffener (See Note)	Mark I Program
Axial F_x=1 kip	2.36	2.91	1.18	1.77	8.68	6.55
In-Plane Shear F_y=1 kip	0.73	1.07	0.47	0.90	1.33	2.48
Out-of-Plane Shear F_z=1 kip	1.76	1.35	0.14	0.27	2.03	1.96
Torsion M_x=1 in-kip	0.53	1.27	0.40	0.67	2.07	2.13
Out-of-Plane Bending M_y=1 in-kip	0.80	2.0	0.60	1.0	2.93	2.47
In-Plane Bending M_y=1 in-kip	1.27	2.27	1.07	1.47	3.07	2.40
Pressure p=1 psi	1.62	2.69	1.09	1.62	3.04	5.57

Note: These factors apply to regions within 12" of stiffener.

TELEDYNE ENGINEERING SERVICES

BY [illegible] DATE 12/27/90
CHKD. BY PHH DATE 12/27/90

VERMONT YANKEE STRESS INTENSIFICATION FACTORS CALCULATION PKG 7426

SHEET NO. 12 OF 56
PROJ. NO. 7426

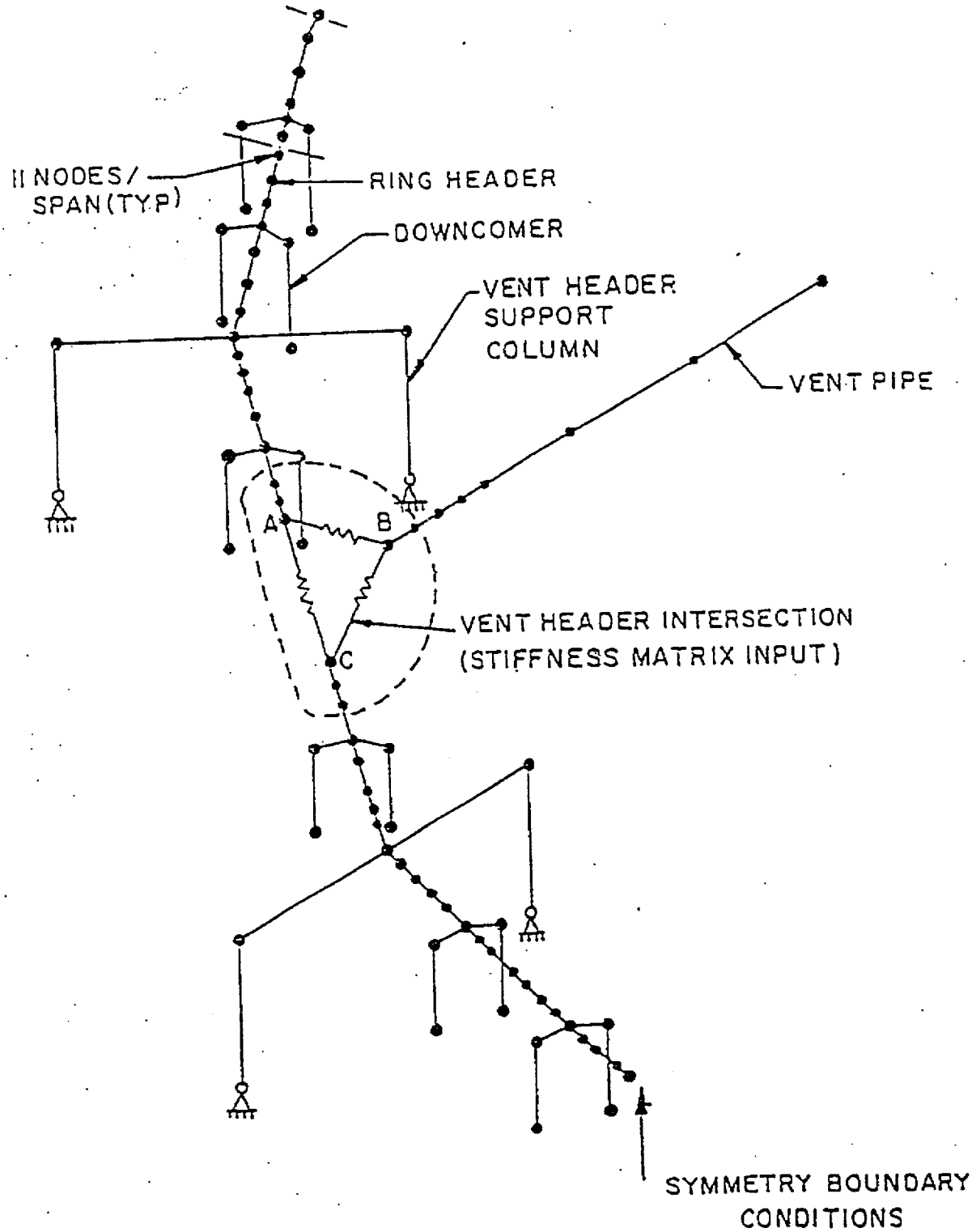

VENT System Beam Model, Vermont Yankee

FIGURE 2-1

TELEDYNE ENGINEERING SERVICES

BY PHH DATE 12/18/90
CHKD. BY JVT DATE 12/19/90

VERMONT YANKEE
STRESS INTENSIFICATION FACTORS
CALCULATION PACKAGE 7426-2

SHEET NO. 13 OF 56
PROJ. NO. 7426

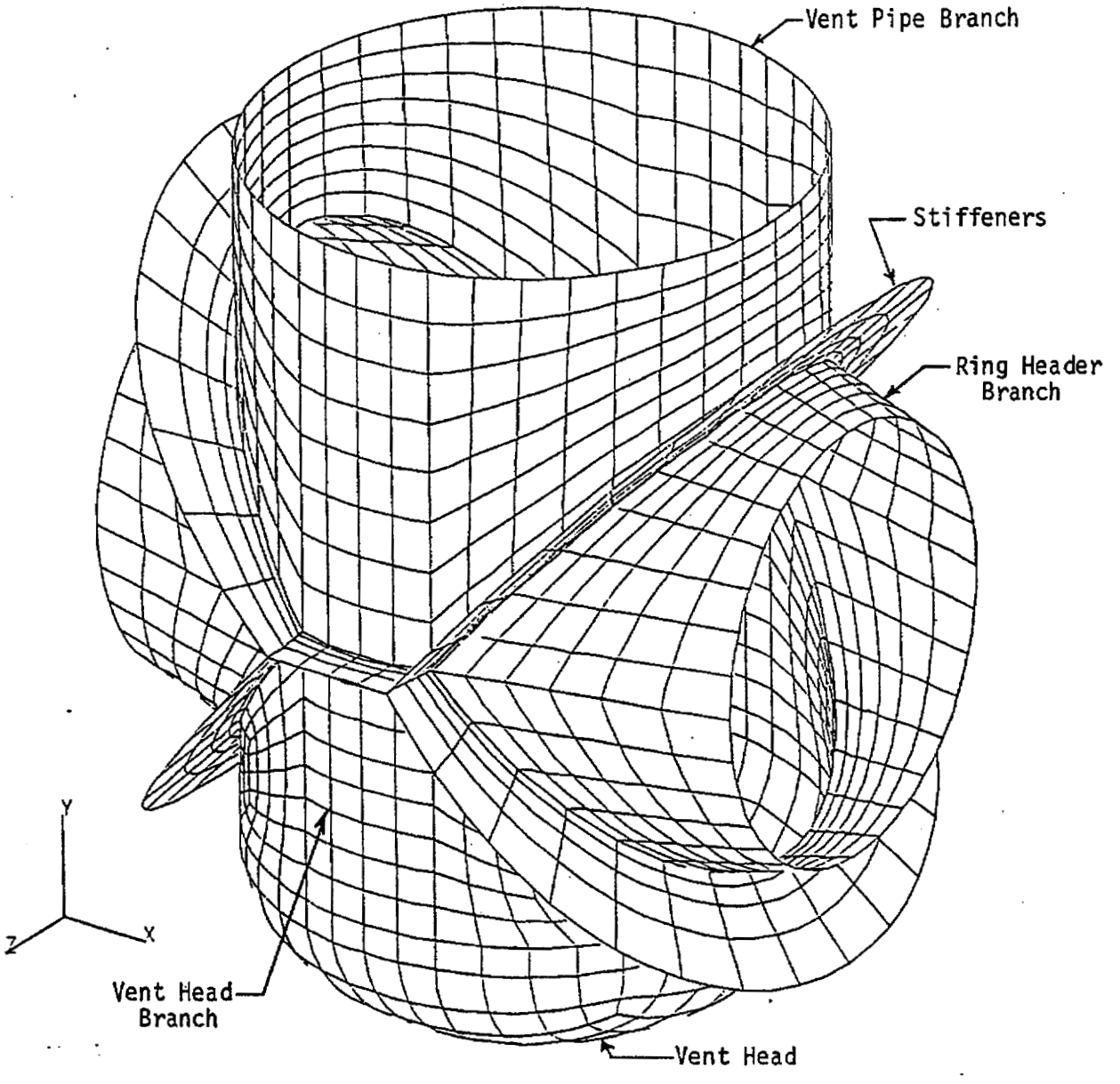

FIGURE 3-1 VENT HEADER INTERSECTION COMPUTER MODEL

TELEDYNE ENGINEERING SERVICES

BY DM DATE 12-27-90
CHKD. BY HK DATE 12-27-90

VERMONT YANKEE
STRESS INTENSIFICATION FACTORS
CALCULATION PACKAGE 7426-2

SHEET NO. 14 OF 56
PROJ. NO. 7426

VENT PIPE/HEADER INTERSECTION LOCAL THICKNESS REGIONS VERMONT YANKEE NUCLEAR STATION

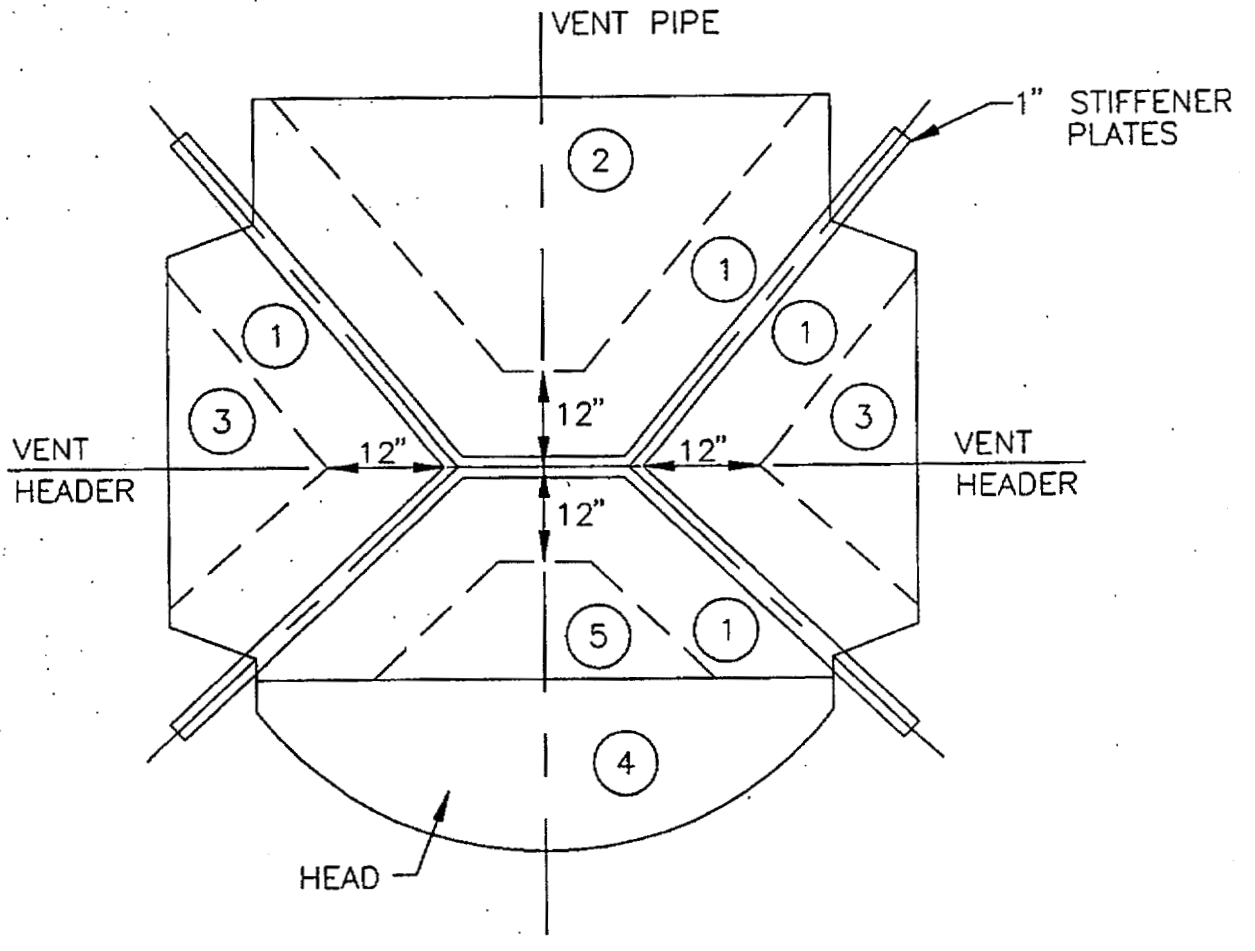

(1) ADJACENT TO STIFFENERS
(2) AT VENT PIPE BRANCH
(3) AT RING HEADER BRANCH
(4) AT VENT HEAD
(5) AT VENT HEAD BRANCH

FIGURE 3.2

TELEDYNE ENGINEERING SERVICES

BY DM DATE 12-27-90
CHKD. BY RK DATE 12-27-90

VERMONT YANKEE
STRESS INTENSIFICATION FACTORS
CALCULATION PACKAGE 7426-2

SHEET NO. 15 OF 56
PROJ. NO. 7426

PERMISSIBLE SIZE RANGE FOR INDICATION VENT PIPE/HEADER INTERSECTION AT VENT PIPE BRANCH VERMONT YANKEE NUCLEAR STATION

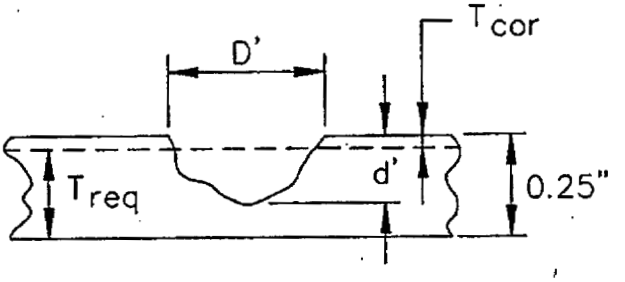

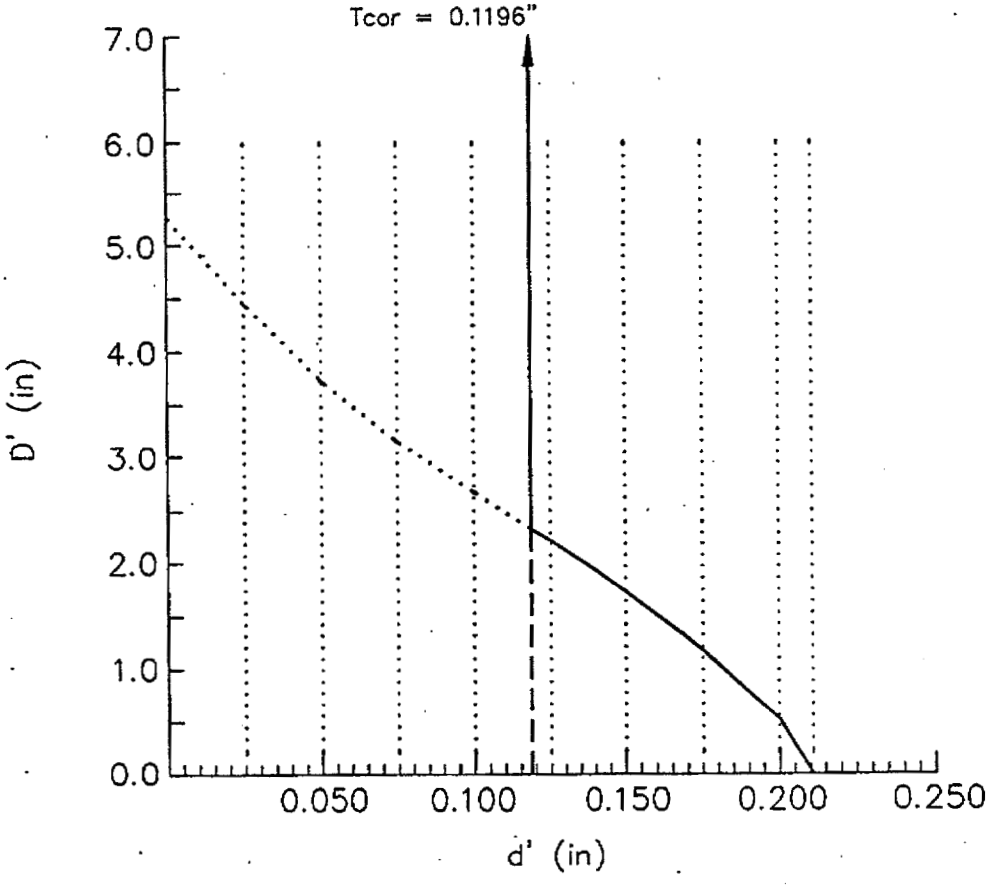

FIGURE 3.3

TELEDYNE ENGINEERING SERVICES

BY [illegible] DATE 11-21-91
CHKD. BY [illegible] DATE 11-21-91

VERMONT YANKEE
STRESS INTENSIFICATION FACTORS
CALCULATION PACKAGE 7426-2

SHEET NO. 16 OF 56
PROJ. NO. 7426
Revision 1

PERMISSIBLE SIZE RANGE FOR INDICATION VENT PIPE/HEADER INTERSECTION AT RING HEADER BRANCH VERMONT YANKEE NUCLEAR STATION

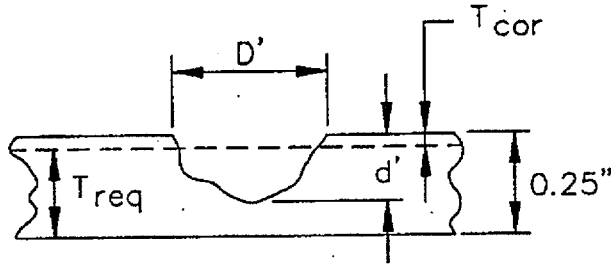

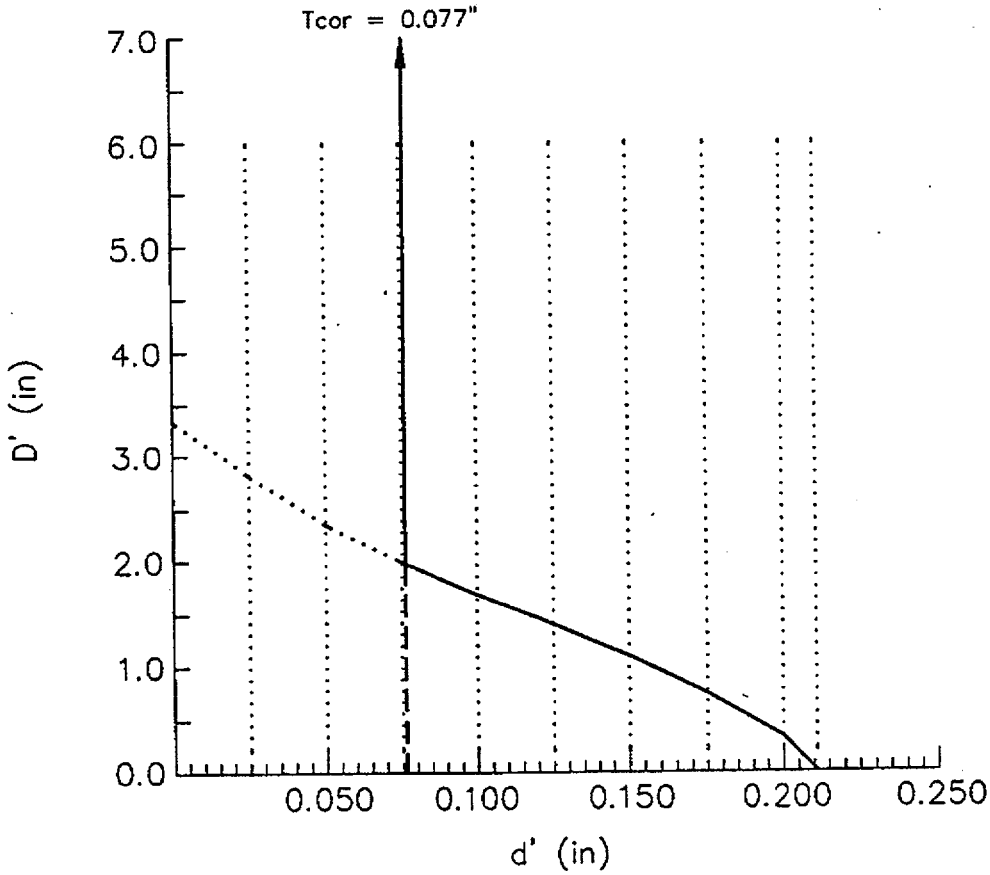

FIGURE 3.4

TELEDYNE ENGINEERING SERVICES

BY DM DATE 12-27-90
CHKD. BY RAE DATE 12-27-90

VERMONT YANKEE
STRESS INTENSIFICATION FACTORS
CALCULATION PACKAGE 7426-2

SHEET NO. 17 OF 56
PROJ. NO. 7426

PERMISSIBLE SIZE RANGE FOR INDICATION VENT PIPE/HEADER INTERSECTION AT VENT HEAD VERMONT YANKEE NUCLEAR STATION

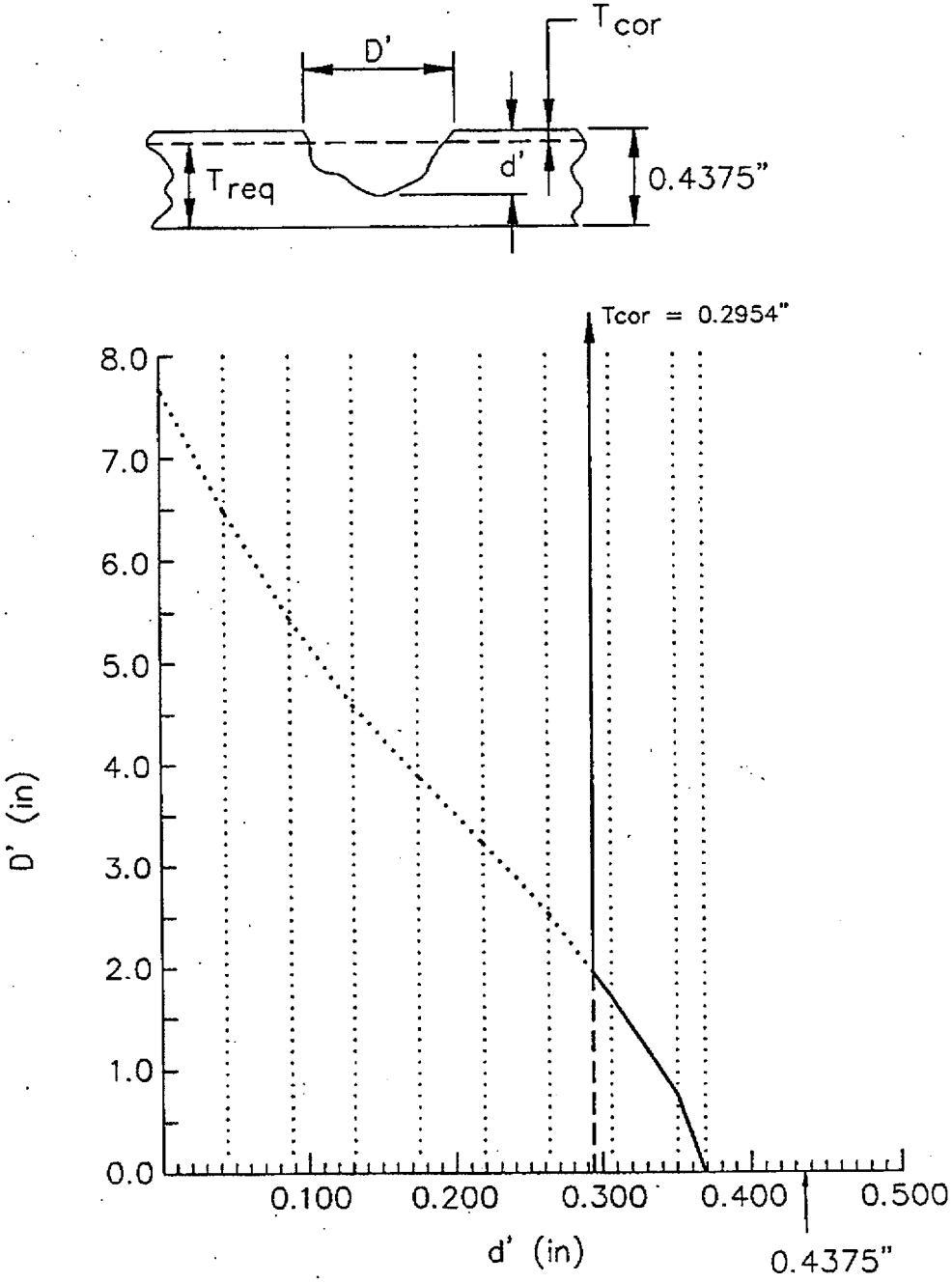

FIGURE 3.5

TELEDYNE ENGINEERING SERVICES

BY DM DATE 12-27-90
CHKD. BY RK DATE 12-27-90

VERMONT YANKEE
STRESS INTENSIFICATION FACTORS
CALCULATION PACKAGE 7426-2

SHEET NO. 18 OF 56
PROJ. NO. 7426

PERMISSIBLE SIZE RANGE FOR INDICATION VENT PIPE/HEADER INTERSECTION AT VENT HEAD BRANCH VERMONT YANKEE NUCLEAR STATION

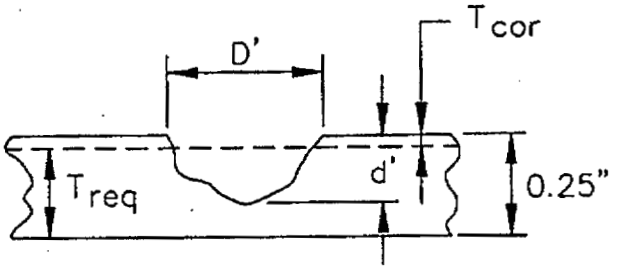

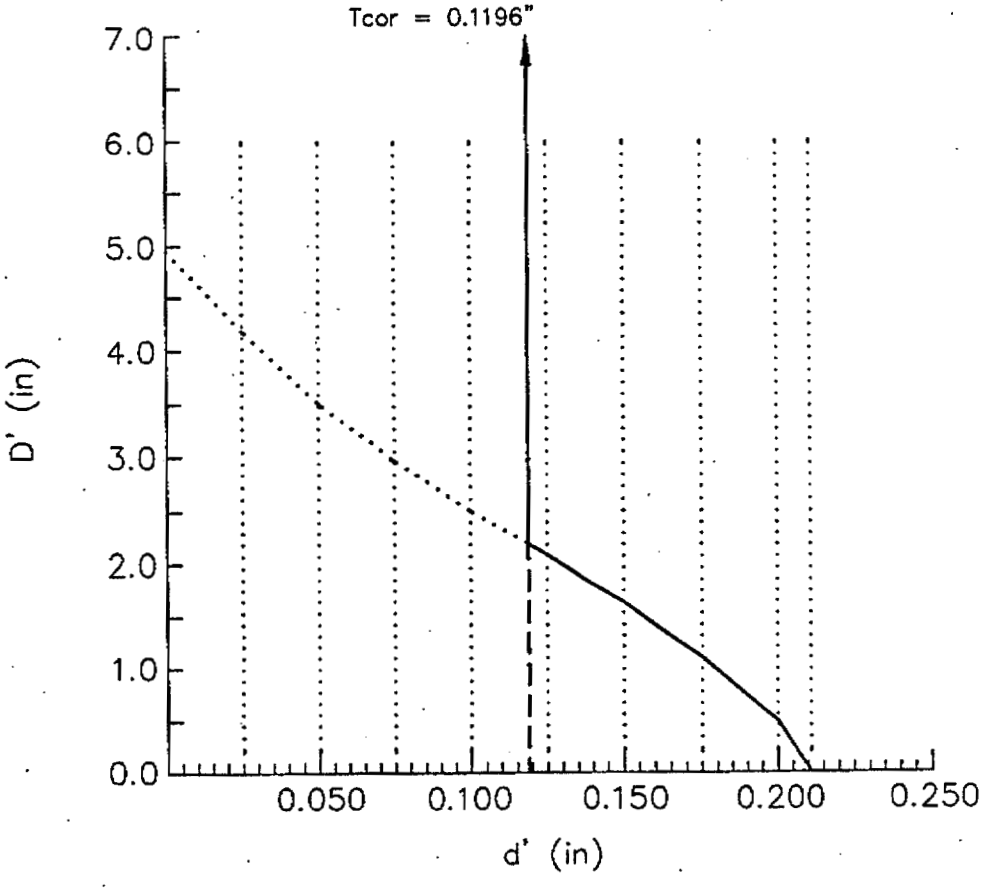

FIGURE 3.6

TELEDYNE ENGINEERING SERVICES

BY [illegible] DATE 12-27-90
CHKD. BY [illegible] DATE 12-27-90

VERMONT YANKEE
STRESS INTENSIFICATION FACTORS
CALCULATION PACKAGE 7426-2

SHEET NO. 19 OF 56
PROJ. NO. 7426

PERMISSIBLE SIZE RANGE FOR INDICATION VENT PIPE/HEADER INTERSECTION ADJACENT TO STIFFENERS VERMONT YANKEE NUCLEAR STATION

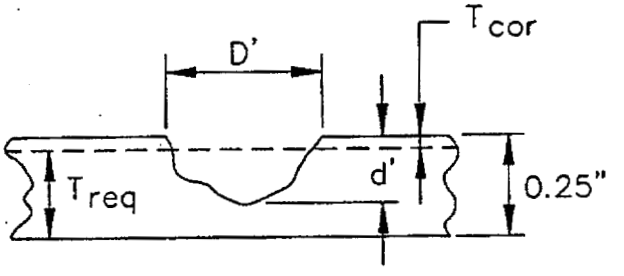

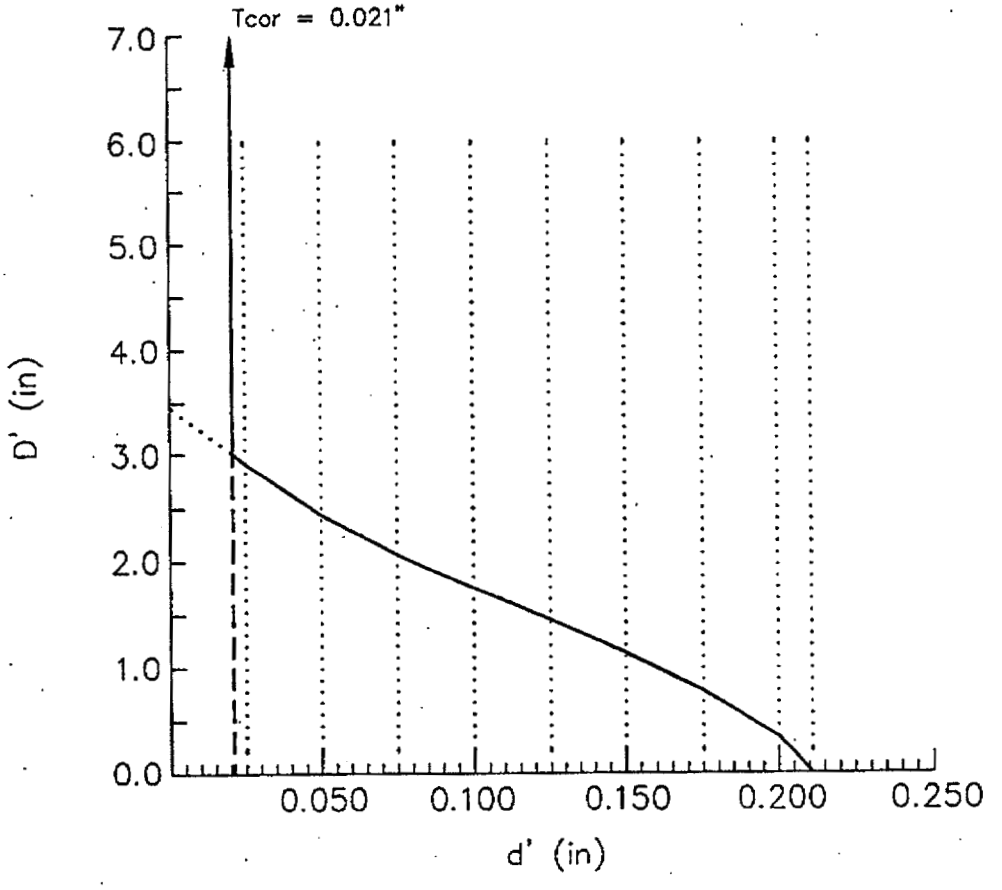

FIGURE 3.7

APPENDIX A

Finite-Element Analysis of Type II Vent Header Intersection

A.1 ANALYTICAL MODEL

The method of analysis for determining the stress intensification factors in the bottom section of the vent sphere is similar to the procedure described in Section 3.2 of "Analysis of Vent Pipe-Ring Header Intersections," Task 4.2.2, prepared by Bechtel Power Corporation for General Electric (Ref. 1.0). The geometry used for this analysis is similar to the Type II vent-header intersection described in Ref. 1.0 with actual dimensions obtained from Ref. 4. The finite element shell model is shown in Figures A.1-1 through A.1-7.

TELEDYNE ENGINEERING SERVICES

BY PHH DATE 12/17/90
CHKD. BY JJX DATE 12/17/90

VERMONT YANKEE
STRESS INTENSIFICATION FACTORS
CALCULATION PACKAGE 7426-2

SHEET NO. 22 OF 56
PROJ. NO. 7426

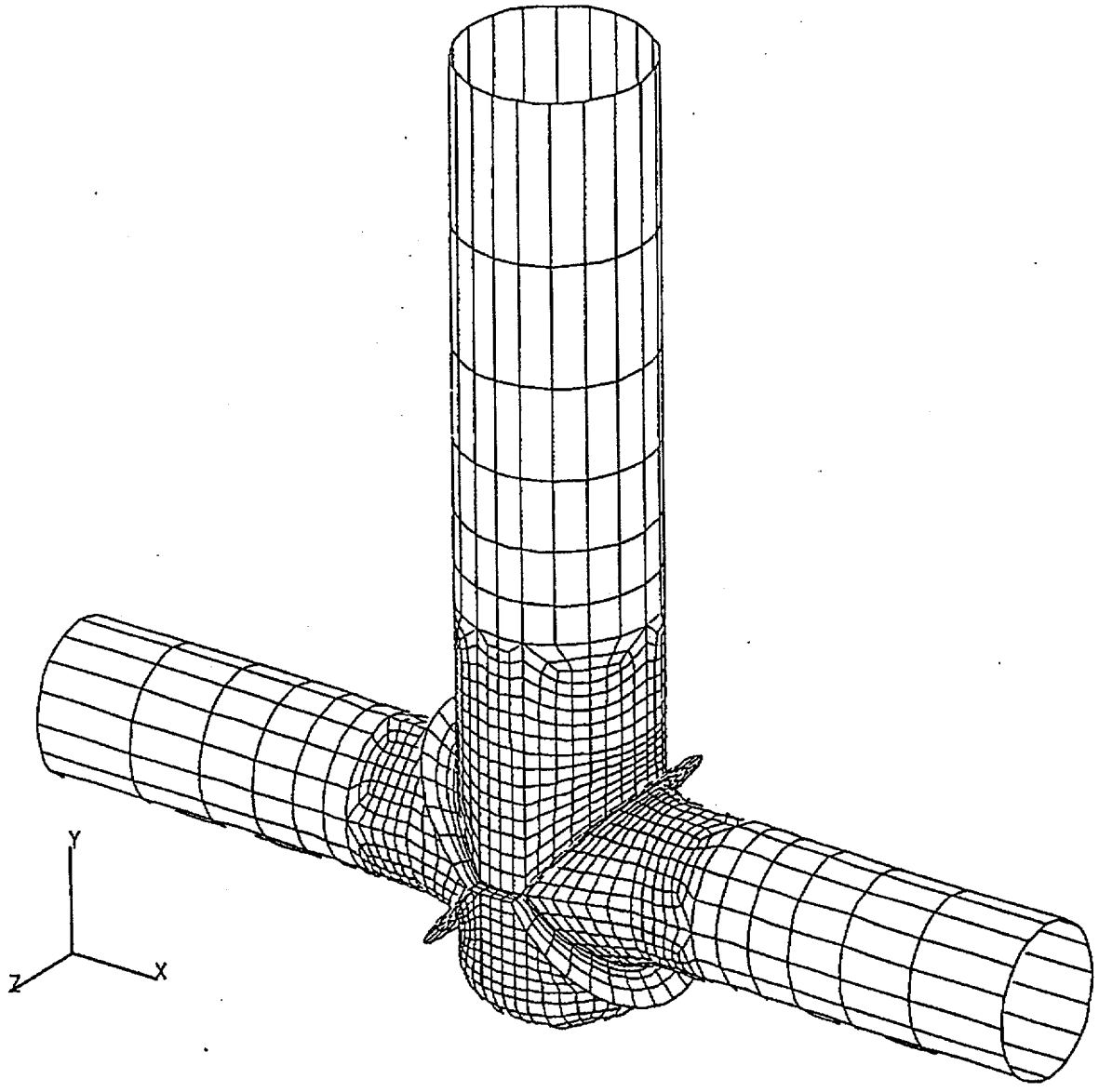

FIGURE
A.1-1 VENT-HEADER INTERSECTION MODEL

TELEDYNE ENGINEERING SERVICES

BY PHH DATE 12/17/90
CHKD. BY JAT DATE 12/17/90

VERMONT YANKEE
STRESS INTENSIFICATION FACTORS
CALCULATION PACKAGE 7426-2

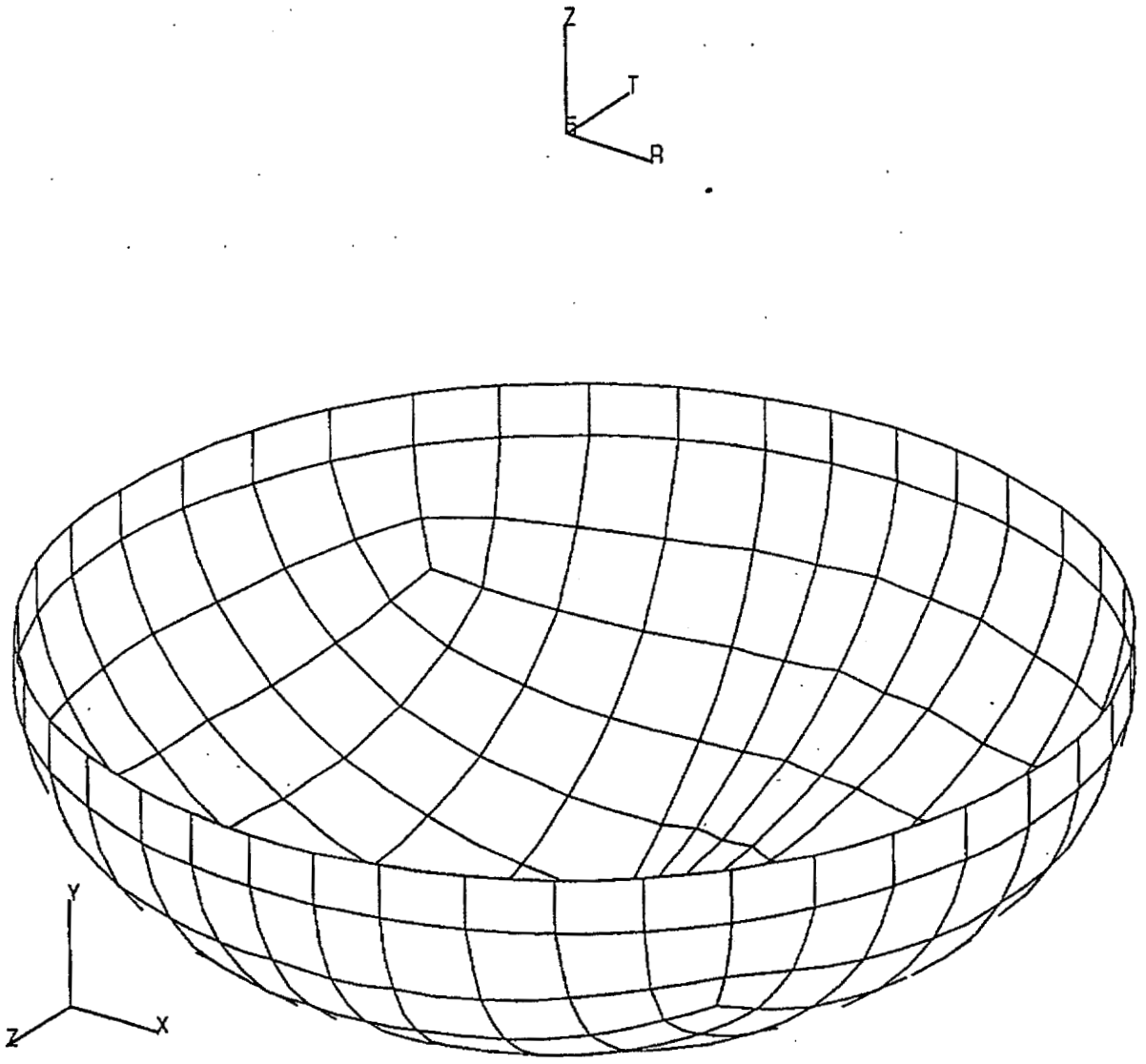

GLOBAL AXES

FIGURE A.1-2 ELLIPSE SECTION

TELEDYNE ENGINEERING SERVICES

BY PHH DATE 12/17/90
CHKD. BY [illegible] DATE 12/17/90

VERMONT YANKEE
STRESS INTENSIFICATION FACTORS
CALCULATION PACKAGE 7426-2

SHEET NO. 24 OF 56
PROJ. NO. 7426

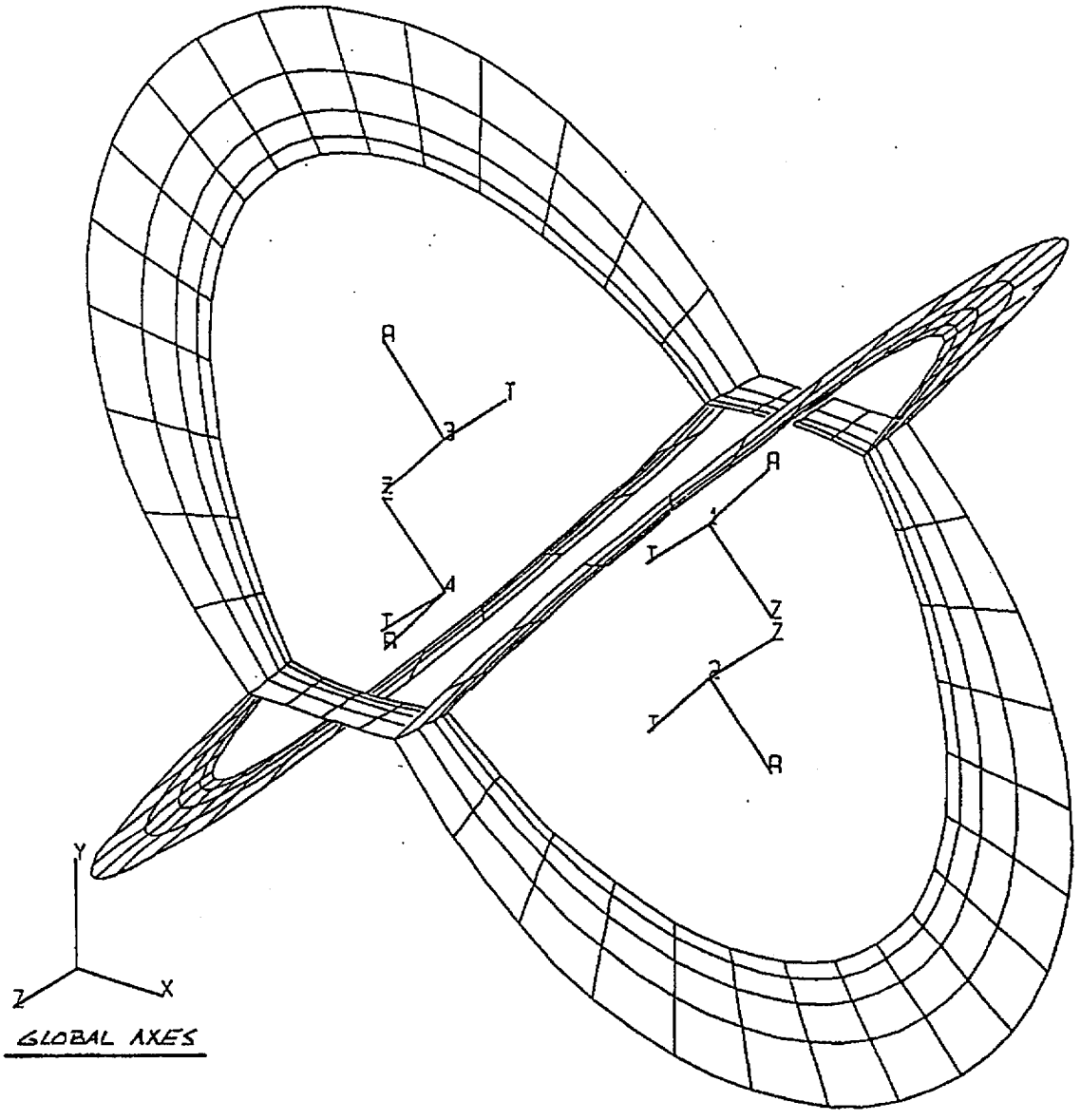

FIGURE A.1-3 STIFFENER RING SECTIONS

TELEDYNE ENGINEERING SERVICES

BY PHH DATE 12/17/90
CHKD. BY JAT DATE 12/17/90

VERMONT YANKEE
STRESS INTENSIFICATION FACTORS
CALCULATION PACKAGE 7426-2

SHEET NO. 25 OF 56
PROJ. NO. 7426

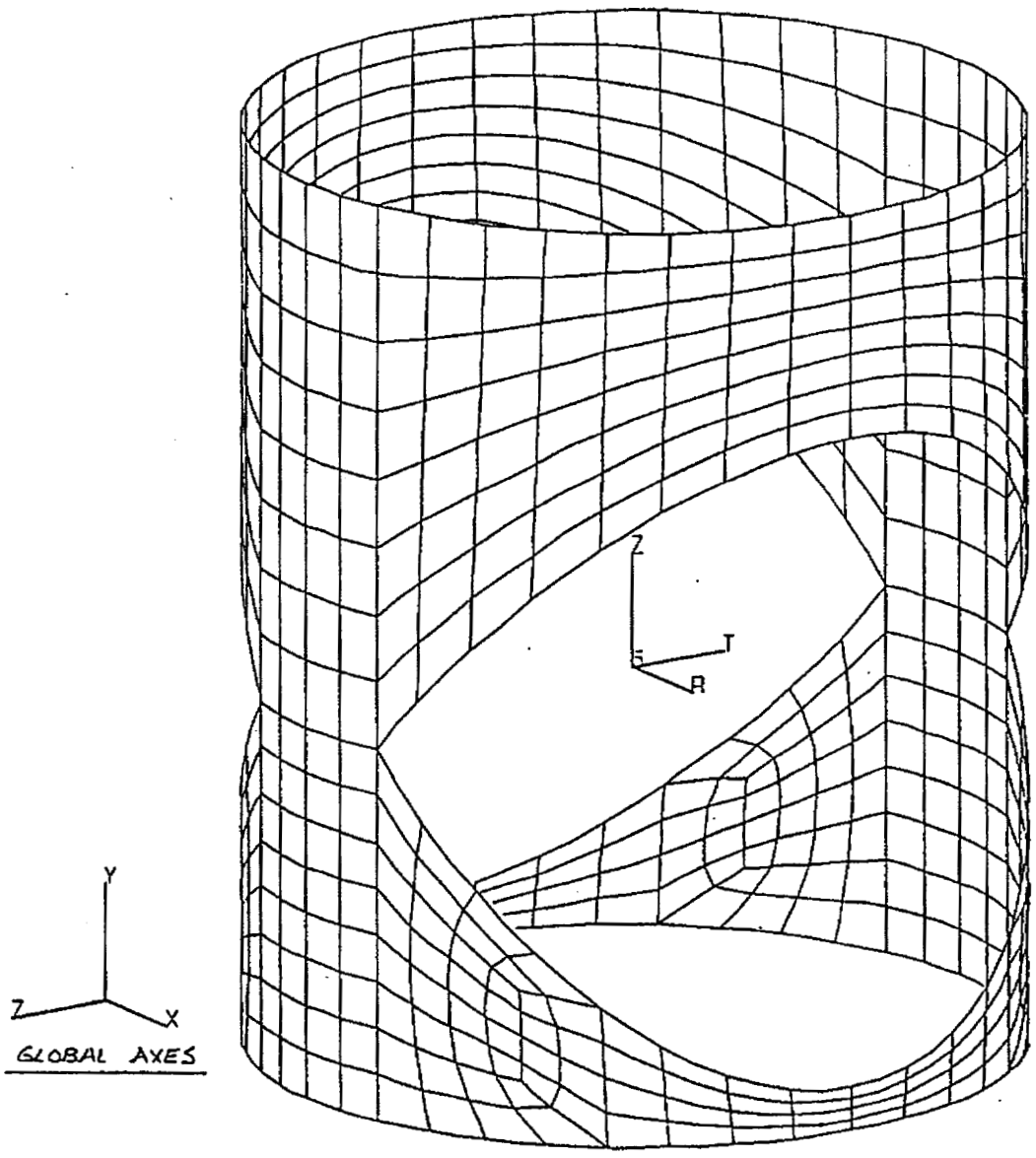

FIGURE A.1-4 CYLINDRICAL SECTION

TELEDYNE ENGINEERING SERVICES

BY PHH DATE 12/17/90
CHKD. BY [illegible] DATE 12/17/90

VERMONT YANKEE
STRESS INTENSIFICATION FACTORS
CALCULATION PACKAGE 7426-2

SHEET NO. 26 OF 56
PROJ. NO. 7426

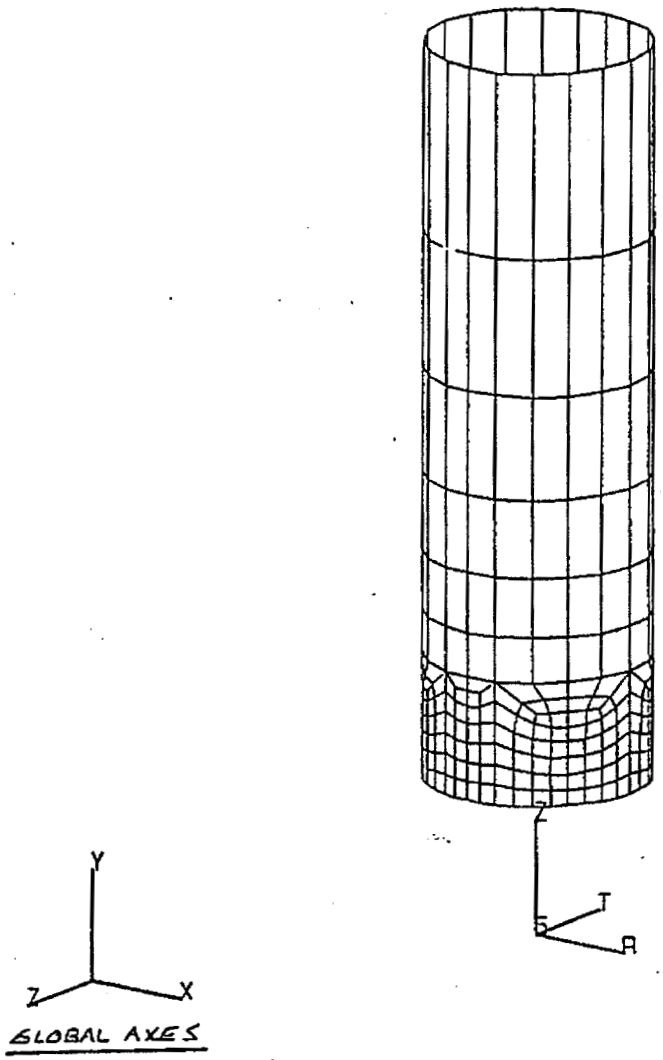

FIGURE A.1-5 VENT LINE SECTION

TELEDYNE ENGINEERING SERVICES

BY PHH DATE 12/17/90
CHKD. BY JT DATE 12/17/90

VERMONT YANKEE
STRESS INTENSIFICATION FACTORS
CALCULATION PACKAGE 7426-2

SHEET NO. 27 OF 56
PROJ. NO. 7426

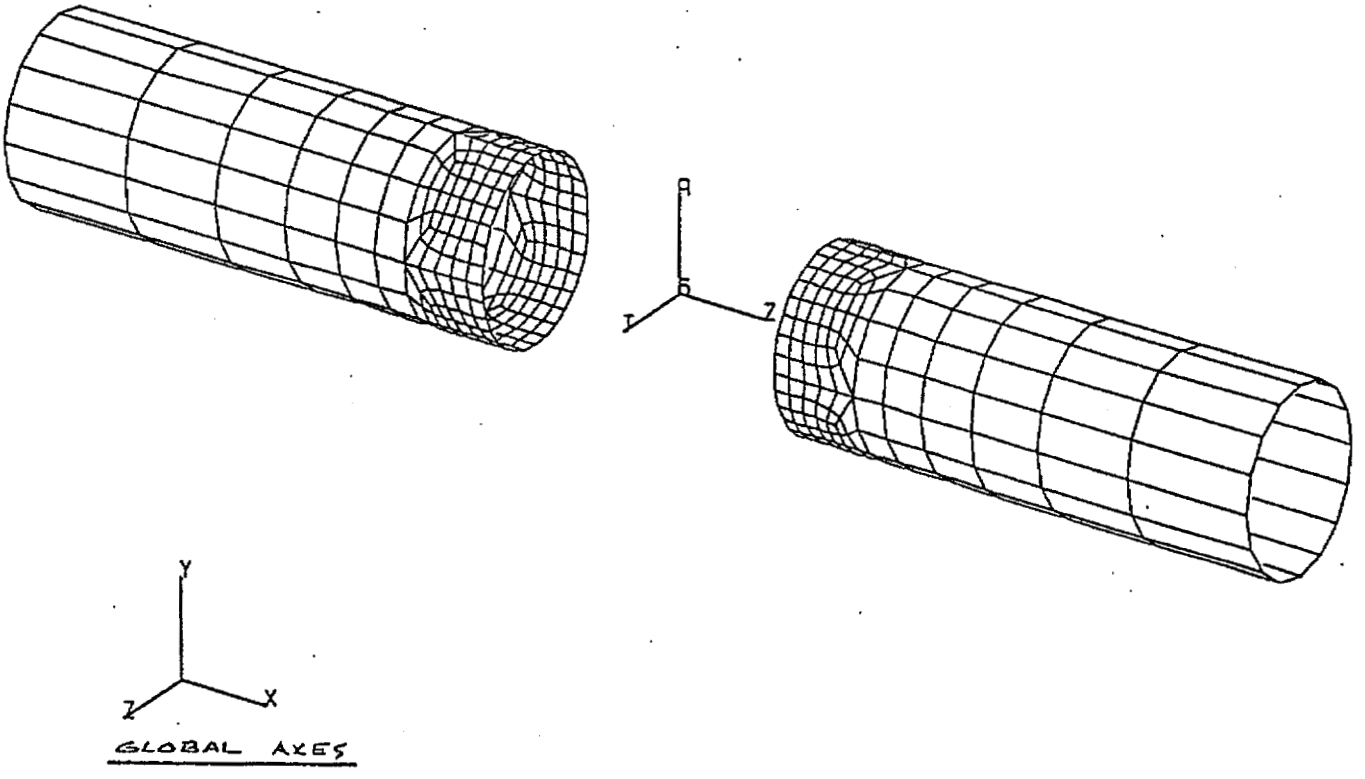

FIGURE A.1-6 VENT HEADER SECTIONS

TELEDYNE ENGINEERING SERVICES

BY PHH DATE 12/17/90
CHKD. BY JRT DATE 12/17/90

VERMONT YANKEE
STRESS INTENSIFICATION FACTORS
CALCULATION PACKAGE 7426-2

SHEET NO. 28 OF 56
PROJ. NO. 7426

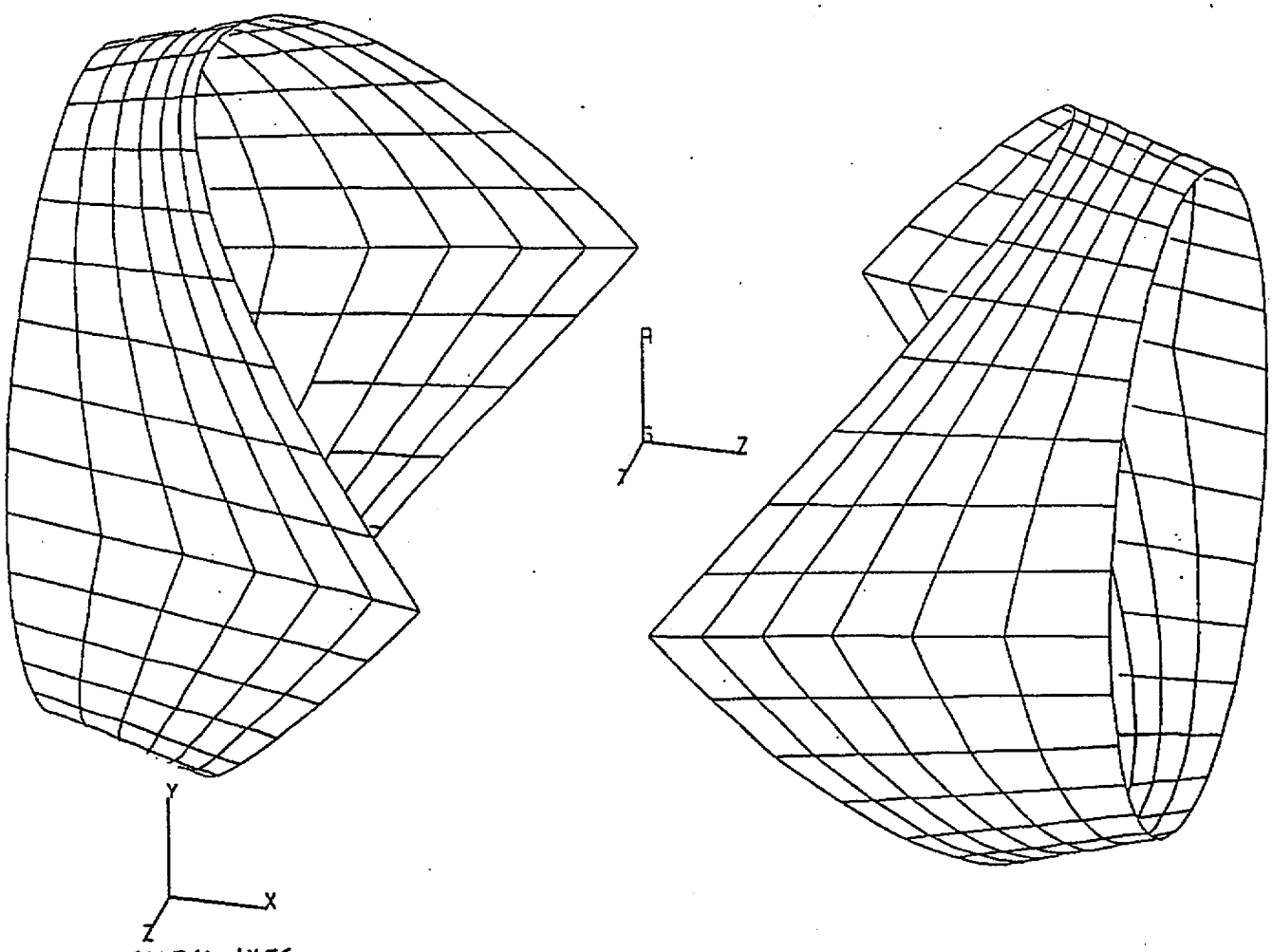

GLOBAL AXES

FIGURE A.1-7 VENT NOZZLE SECTION

A.2 UNIT LOAD ANALYSIS

The shell model is subjected to unit forces and unit moments on the ends of the vent headers and one internal pressure case which results in a total of seven separate load steps. The two shear loads are equilibrated with an opposing moment which results in pure shear at the ring-vent intersection. Table A-1 shows the directions and magnitudes of the seven applied unit load steps.

A.3 RESULTS

The results of the computer analysis for the vent header have been summarized in Tables A-2 through A-7.

TELEDYNE ENGINEERING SERVICES

BY PHH DATE 12/27/90
CHKD. BY JJT DATE 12/27/90

VERMONT YANKEE
STRESS INTENSIFICATION FACTORS
CALCULATION PAKCAGE 7426-2

SHEET NO. 31 OF 56
PROJ. NO. 7426

TABLE A-1

Load Case	Load Type	Load Magnitude
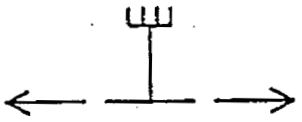	Axial, Fx	1 kip
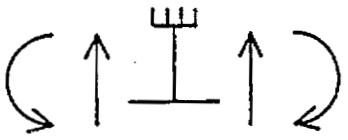	Shear, Fy	1 kip
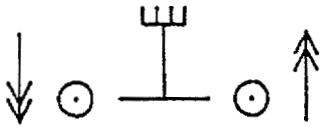	Shear, Fz	1 kip
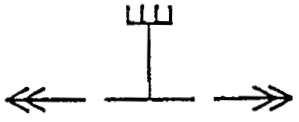	Torsion, Mx	1 in-kip
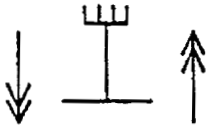	Bending, My	1 in-kip
	Bending, Mz	1 in-kip
	Pressure, p	1000 psi

Moments applied in combination with shear loads provide pure shear loading at sphere-header intersection.

TABLE A-2

STRESS INTENSIFICATION FACTORS FOR VENT PIPE BRANCH

Load or Moment	Local Membrane Stress Intensity (ksi)	Equivalent Beam Stress (NEDE-21968) (ksi)	Stress Intensification Factor: Local Membrane
Axial F_x = 1 kip	0.052	0.022	2.36
In-Plane Shear F_y = 1 kip	0.064	0.088	0.73
Out-of-Plane Shear F_z = 1 kip	0.155	0.088	1.76
Torsion M_x = 1 in-kip	0.0008	0.0015	0.53
Out-of-Plane Bending M_y = 1 in-kip	0.0012	0.0015	0.80
In-Plane Bending M_z = 1 in-kip	0.0019	0.0015	1.27
Pressure p = 1 ksi	185.0	114.0	1.62

TABLE A-3

STRESS INTENSIFICATION FACTORS FOR RING HEADER BRANCHES

Load or Moment	Local Membrane Stress Intensity (ksi)	Equivalent Beam Stress (NEDE-21968) (ksi)	Stress Intensification Factor: Local Membrane
Axial F_x = 1 kip	0.064	0.022	2.91
In-Plane Shear F_y = 1 kip	0.094	0.088	1.07
Out-of-Plane Shear F_z = 1 kip	0.119	0.088	1.35
Torsion M_x = 1 in-kip	0.0019	0.0015	1.27
Out-of-Plane Bending M_y = 1 in-kip	0.003	0.0015	2.0
In-Plane Bending M_z = 1 in-kip	0.0034	0.0015	2.27
Pressure p = 1 ksi	307.0	114.0	2.69

TABLE A-4

STRESS INTENSIFICATION FACTORS FOR VENT HEAD

Load or Moment	Local Membrane Stress Intensity (ksi)	Equivalent Beam Stress (NEDE-21968) (ksi)	Stress Intensification Factor: Local Membrane
Axial F_x = 1 kip	0.026	0.022	1.18
In-Plane Shear F_y = 1 kip	0.041	0.088	0.47
Out-of-Plane Shear F_z = 1 kip	0.012	0.088	0.14
Torsion M_x = 1 in-kip	0.0006	0.0015	0.40
Out-of-Plane Bending M_y = 1 in-kip	0.0009	0.0015	0.60
In-Plane Bending M_z = 1 in-kip	0.0016	0.0015	1.07
Pressure p = 1 ksi	124.0	114.0	1.09

TABLE A-5

STRESS INTENSIFICATION FACTORS FOR VENT HEAD BRANCH

Load or Moment	Local Membrane Stress Intensity (ksi)	Equivalent Beam Stress (NEDE-21968) (ksi)	Stress Intensification Factor: Local Membrane
Axial F_x = 1 kip	0.039	0.022	1.77
In-Plane Shear F_y = 1 kip	0.079	0.088	0.9
Out-of-Plane Shear F_z = 1 kip	0.024	0.088	0.27
Torsion M_x = 1 in-kip	0.001	0.0015	0.67
Out-of-Plane Bending M_y = 1 in-kip	0.0015	0.0015	1.0
In-Plane Bending M_z = 1 in-kip	0.002	0.0015	1.47
Pressure p = 1 ksi	185.0	114.0	1.62

VYC-1032 ATTACHMENT C

TABLE A-6

STRESS INTENSIFICATION FACTORS ADJACENT TO STIFFENERS

Load or Moment	Local Membrane Stress Intensity (ksi)	Equivalent Beam Stress (NEDE-21968) (ksi)	Stress Intensification Factor: Local Membrane
Axial F_x = 1 kip	0.191	0.022	8.68
In-Plane Shear F_y = 1 kip	0.117	0.088	1.33
Out-of-Plane Shear F_z = 1 kip	0.179	0.088	2.03
Torsion M_x = 1 in-kip	0.0031	0.0015	2.07
Out-of-Plane Bending M_y = 1 in-kip	0.0044	0.0015	2.93
In-Plane Bending M_z = 1 in-kip	0.0046	0.0015	3.07
Pressure p = 1 ksi	347.0	114.0	3.04

Note: These factors apply to regions within 12" of stiffener.

YC-1032 ATTACHMENT C

TABLE A-7

STRESS INTENSIFICATION FACTORS FOR STIFFENERS

Load or Moment	Membrane Stress Intensity (ksi)	Equivalent Beam Stress (NEDE-21968) (ksi)	Stress Intensification Factor: Membrane
Axial F_x = 1 kip	0.171	0.022	7.77
In-Plane Shear F_y = 1 kip	0.105	0.088	1.19
Out-of-Plane Shear F_z = 1 kip	0.142	0.088	1.61
Torsion M_x = 1 in-kip	0.0025	0.0015	1.67
Out-of-Plane Bending M_y = 1 in-kip	0.0036	0.0015	2.4
In-Plane Bending M_z = 1 in-kip	0.0024	0.0015	1.6
Pressure p = 1 ksi	379.0	114.0	3.32

VYC-1032 ATTACHMENT C

APPENDIX B

Check of the Computer Model

TELEDYNE ENGINEERING SERVICES

BY PHH DATE 12/12/90
CHKD. BY CMS DATE 12/21/90

VERMONT YANKEE
STRESS INTENSIFICATION FACTORS
CALCULATION PACKAGE 7426-2

SHEET NO. 39 OF 56
PROJ. NO. 7426

CHECK OF PRESSURE STRESSES IN THE VENT HEADER

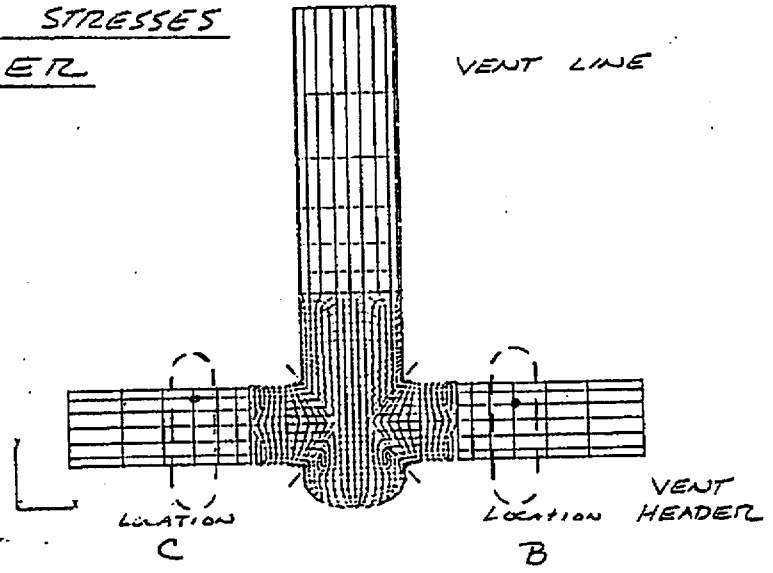

Pressure = 1 KSI
Inside Radius = 28.5 in
Wall Thickness = 0.25 in

$$\sigma_{hoop} = \frac{Pr_i}{t} = \frac{1(28.5)}{0.25} = 114 \text{ KSI}$$

$$\sigma_{axial} = \frac{Pr_i}{2t} = \frac{1(28.5)}{2(0.25)} = 57 \text{ KSI}$$

From The Computer Model @ Locations B & C

@ NODE 5281 $\sigma_{hoop} = 117.9$ KSI

$\sigma_{axial} = 59.6$ KSI

@ NODE 6765 $\sigma_{hoop} = 117.9$ KSI

$\sigma_{axial} = 75.5$ KSI

Ref Computer Run YANK.DAT Dec 20, 1990 10:38:15
(Reference 10)
Accounting for localized effects near the vent intersection the agreement with infinite cylinder results is good.

TELEDYNE ENGINEERING SERVICES

BY PHH DATE 12/12/90
CHKD. BY CMS DATE 12/21/90

VERMONT YANKEE
STRESS INTENSIFICATION FACTORS
CALCULATION PACKAGE 7426-2

SHEET NO. 40 OF 56
PROJ. NO. 7426

CHECK OF PRESSURE STRESSES IN THE VENT LINE

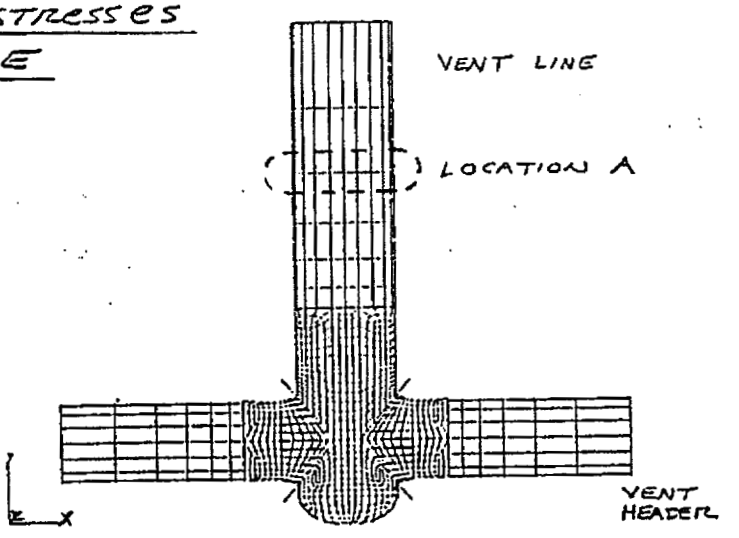

Pressure = 1 KSI
Inside Radius = 40.5 in
Wall Thickness = 0.25 in

$$\sigma_{hoop} = \frac{Pr_i}{t} = \frac{1(40.5)}{0.25} = 162 \text{ KSI}$$

$$\sigma_{axial} = \frac{Pr_i}{2t} = \frac{1(40.5)}{2(0.25)} = 81 \text{ KSI}$$

From the Computer Model @ Location A

@ NODE 1310 $\sigma_{hoop} = 162.5$ KSI

$\sigma_{axial} = 69.6$ KSI

Ref. Computer Run YANK.DAT Dec 20, 1990 10:38:15
(Reference 10)

Accounting for localized effects near the vent intersection the agreement with infinite cylinder results is good.

APPENDIX C

Permissible Corrosion Allowances for the Vent Pipe/Header Intersection

TELEDYNE ENGINEERING SERVICES

BY PHH DATE 12/21/90
CHKD. BY JJF DATE 12/21/90

VERMONT YANKEE
STRESS INTENSIFICATION FACTORS
CP-7426-2

SHEET NO. 42 OF 56
PROJ. NO. 7426

CALCULATION OF PERMISSIBLE CORROSION ALLOWANCES IN VENT PIPE / HEADER INTERSECTION

Controlling Load Combination is 19 (Ref 3, Pg 25 of 30)

Forces and Moments	7751	PSI
Internal Pressure	817	PSI

LOCAL MEMBRANE STRESSES

$$T = SIF_{(\text{Forces + Moments})} \times \text{Vent Stress}_{(F+M)} + SIF_{(\text{Press})} \times \text{Vent Stress}_{(\text{Press})}$$

VENT HEADER LOCATION	SIF (F+M)	VENT STRESS (F+M) (PSI)	SIF (PRESS)	VENT STRESS (PRESS) (PSI)	LOCAL MEMBRANE STRESS (PSI)
VENT PIPE BRANCH	1.3	10,100	1.6	1310	11,400
RING HEADER BRANCH	2.3	17,800	2.7	2210	20,000
VENT HEAD	1.1	8,500	1.1	900	9,400
VENT HEAD BRANCH	1.5	11,600	1.6	1310	12,900
ADJACENT TO STIFFEN.	3.1	24,000	3.0	2450	26,500

Permissible Corrosion Allowance

THE PERMISSIBLE CORROSION ALLOWANCE (T_{COR}) IS CALCULATED FOR 5 LOCATIONS ON THE VENT PIPE / HEADER INTERSECTION. WITHIN EACH OF THESE AREAS, T_{COR} IS LIMITED TO AN AREA NO GREATER THAN THE AREA COVERED BY A CIRCLE WITH A RADIUS OF $2.5\sqrt{rt}$.

THE PERMISSIBLE CORROSION ALLOWANCE (T_{COR}) IS CALCULATED AS FOLLOWS:

$$T_{req} = \frac{\text{LOCAL MEMBRANE STRESS}}{1.5\,S_m} \times \text{Shell Thickness}$$

THE VALUE OF T_{req} IS COMPARED TO THE CODE MINIMUM WALL THICKNESS FOR PRESSURE, AND THE GREATER OF THESE TWO NUMBERS IS USED AS THE REQUIRED THICKNESS.

$$T_{COR} = \text{Shell Thickness} - \left(\begin{array}{c}\text{MAX OF } T_{req} \text{ OR} \\ \text{CODE MIN. WALL} \\ \text{FOR PRESSURE}\end{array}\right)$$

THE PERMISSIBLE CORROSION ALLOWANCES FOR EACH OF THE 5 AREAS ARE CALCULATED ON THE FOLLOWING PAGES

TELEDYNE ENGINEERING SERVICES

BY GM DATE 12-21-90
CHKD. BY CMS DATE 12/21/90

VERMONT YANKEE
STRESS INTENSIFICATION FACTORS
CALCULATION PACKAGE 7426-2

PROJ. NO. 7426

FOR VENT PIPE BRANCH AND VENT HEAD BRANCH, THE CODE REQUIRED THICKNESS IS

$$t = \frac{PR}{S - .6P}$$

FOR ASME CLASS MC COMPONENTS (REFERENCE 9 ASME B&PV CODE NE-3324.

$$R = \frac{6' - 9''}{2} \text{ ID} \quad \text{OR} \quad 40.5 \text{ INCHES}$$

$$S = 19{,}300 \text{ PSI} \; ; \; P = 62 \text{ PSI}$$

$$t_{REQ'D} = \frac{62(40.5)}{19{,}300 - .6(62)} = .13035 \text{ INCHES}$$

SIMILARLY, FOR RING HEADER BRANCH PIPING

$$D_o = 4' - 9\tfrac{1}{2}'' \quad \text{OR} \quad R_o = 28.75'' \quad \text{AND}$$

$$t = \frac{PR_o}{S + .4P} = \frac{(62)(28.75)}{19{,}300 + .4(62)} = .09224 \text{ INCHES}$$

TELEDYNE ENGINEERING SERVICES

BY GM DATE 12-21-90
CHKD. BY CMS DATE 12/21/90

VERMONT YANKEE
STRESS INTENSIFICATION FACTOR
CALCULAT PACKAGE 7426-2

SHEET NO. 45 OF 56
PROJ. NO. 7426

FOR VENT HEAD, A 2:1 ELLIPTICAL HEAD

$$t = \frac{PD}{2S - 0.2P}$$ (REFERENCE 9 NE-3324.6)

CONSERVATIVELY, D = 6'-9" OR 81.000 INCHES

$$t = \frac{62\,(81.000)}{2\,(19{,}300) - 0.2\,(62)} = .13015 \text{ INCHES}$$

TELEDYNE ENGINEERING SERVICES

BY PHH DATE 12/21/90
CHKD. BY CMS DATE 12/21/90

VERMONT YANKEE
STRESS INTENSIFICATION FACTORS
CALCULATION PACKAGE 7426-2

PROJ. NO. 7426

Permissible Corrosion Allowances

Location	Shell thickness	Controlling Event	Local Membane Stress (PSI)	Allowable (PSI)	T_{req} (in)	T_{corr} (in)
Vent Pipe Branch	.25	19	11,400	28,950	.1304 (1)	.1196
Ring Header Branch	.25	19	20,000	28,950	.173 (2)	.077
Vent Head	.4375	19	9,400	28,950	.1421 (2)	.2954
Vent Head Branch	.25	19	12,900	28,950	.1304 (1)	.1196
Adjacent to Stiffener	.25	19	26,500	28,950	.229 (2)	.021

(1) T_{req} has been determined from ASME Code min. wall calcs shown on the previous pages

(2) T_{req} has been determined from the Finite Element model SIF calculations

VENT PIPE/VENT HEADER INTERSECTION (AT VENT PIPE BRANCH),
RANGE OF INDICATION SIZES(FILE NAME:VYVPB.MCD)

PERMISSIBLE REDUCTION IN THICKNESS:

Primary Membrane Stress (Pmax,psi): $Pmax := 11400$

Minimum Shell Thickness (T,in): $T := 0.25$

Shell Mean Radius (R,in): $R := 40.625$

Allowable Stress (S,psi): $S := 19300$

Equivalent Pressure: $PO := Pmax \cdot \frac{T}{R}$ $PO = 70.154$

Indication Diameter Factor (X): $X := \frac{1}{T} \cdot \sqrt{\frac{PO}{S}}$ $X = 0.241$

NORMILIZATION OF THICKNESS REDUCTION CURVE:

$L := 0 .. 11$

$K1_L :=$	$K2_L :=$
0.0	1.271
0.1	1.072
0.2	0.899
0.3	0.759
0.4	0.643
0.5	0.535
0.6	0.419
0.7	0.284
0.8	0.126
0.844	0.0
0.9	0.0
1.0	0.0

K1 = d/T

K2 = (D/T)*[(PO/S)**1/2]

Depth of Indication (d,in): $d_L := K1_L \cdot T$

Diameter of Indication per F: $DxF_L := \frac{K2_L}{X}$

TELEDYNE ENGINEERING SERVICES

BY PHH DATE 12/21/90
CHKD. BY CMS DATE 12/21/90

VERMONT YANKEE
STRESS INTENSIFICATION FACTORS
CALCULATION PACKAGE 7426-2

SHEET NO. 48 OF 56
PROJ. NO. 7426

VENT PIPE/VENT HEADER INTERSECTION (AT VENT PIPE BRANCH),
RANGE OF INDICATION SIZES(FILE NAME:VYVPB.MCD)

Depth and Diameter of Indication:

d_L	DxF_L
0	5.27
0.025	4.445
0.05	3.728
0.075	3.147
0.1	2.666
0.125	2.218
0.15	1.737
0.175	1.178
0.2	0.522
0.211	0
0.225	0
0.25	0

GRAPH - DIAMETER OF INDICATION (D,in) VS DEPTH OF INDICATION (d,in)

Thickness available for corrosion (Tcor,in): Tcor := 0.1196

$$d_L := \text{if}\left[d_L < Tcor, Tcor, d_L\right]$$

For Maximum Stressed Shell Element (F = 1.0)

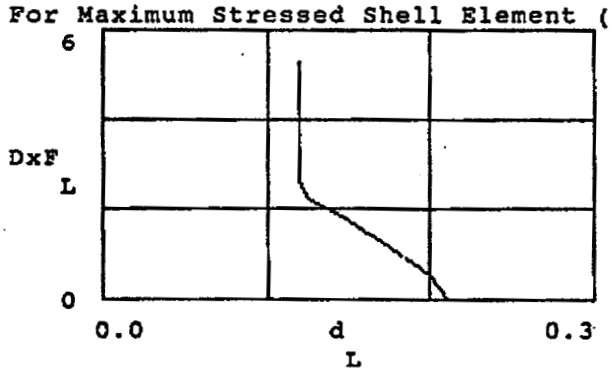

TELEDYNE ENGINEERING SERVICES

BY PHH DATE 12/21/90
CHKD. BY CMS DATE 12/21/90

VERMONT YANKEE
STRESS INTENSIFICATION FACTORS
CALCULATION PACKAGE 7426-2

SHEET NO. 49 OF 56
PROJ. NO. 7426

VENT PIPE/VENT HEADER INTERSECTION (AT RING HEADER BRANCH),
RANGE OF INDICATION SIZES(FILE NAME:VYRHB.MCD)

PERMISSIBLE REDUCTION IN THICKNESS:

Primary Membrane Stress (Pmax,psi): $Pmax := 20000$

Minimum Shell Thickness (T,in): $T := 0.25$

Shell Mean Radius (R,in): $R := 28.625$

Allowable Stress (S,psi): $S := 19300$

Equivalent Pressure: $PO := Pmax \cdot \frac{T}{R}$ $PO = 174.672$

Indication Diameter Factor (X): $X := \frac{1}{T} \cdot \sqrt{\frac{PO}{S}}$ $X = 0.381$

NORMILIZATION OF THICKNESS REDUCTION CURVE:

$L := 0 ..11$

$K1_L :=$	$K2_L :=$
0.0	1.271
0.1	1.072
0.2	0.899
0.3	0.759
0.4	0.643
0.5	0.535
0.6	0.419
0.7	0.284
0.8	0.126
0.844	0.0
0.9	0.0
1.0	0.0

K1 = d/T

K2 = (D/T)*[(PO/S)**1/2]

Depth of Indication (d,in): $d_L := K1_L \cdot T$

Diameter of Indication per F: $DxF_L := \frac{K2_L}{X}$

VENT PIPE/VENT HEADER INTERSECTION (AT RING HEADER BRANCH),
RANGE OF INDICATION SIZES(FILE NAME:VYRHB.MCD)

Depth and Diameter of Indication:

d_L	DxF_L
0	3.34
0.025	2.817
0.05	2.362
0.075	1.995
0.1	1.69
0.125	1.406
0.15	1.101
0.175	0.746
0.2	0.331
0.211	0
0.225	0
0.25	0

GRAPH - DIAMETER OF INDICATION (D,in) VS DEPTH OF INDICATION (d,in)

Thickness available for corrosion (Tcor,in): Tcor := 0.077

$$d_L := \text{if}\left[d_L < Tcor, Tcor, d_L\right]$$

For Maximum Stressed Shell Element (F = 1.0)

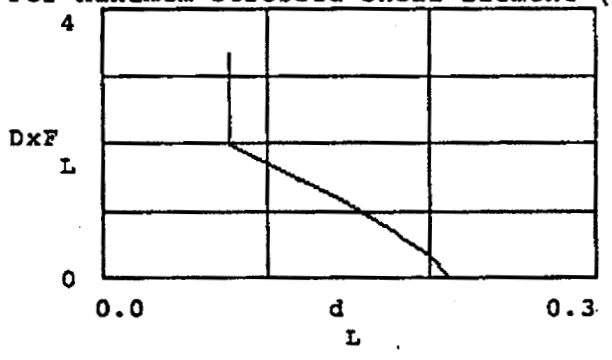

VENT PIPE/VENT HEADER INTERSECTION (AT VENT HEAD),
RANGE OF INDICATION SIZES(FILE NAME:VYVH.MCD)

PERMISSIBLE REDUCTION IN THICKNESS:

Primary Membrane Stress (Pmax,psi): $Pmax := 9400$

Minimum Shell Thickness (T,in): $T := 0.4375$

Shell Mean Radius (R,in): $R := 40.625$

Allowable Stress (S,psi): $S := 19300$

Equivalent Pressure: $PO := Pmax \cdot \frac{T}{R}$ $PO = 101.231$

Indication Diameter Factor (X): $X := \frac{1}{T} \cdot \sqrt{\frac{PO}{S}}$ $X = 0.166$

NORMILIZATION OF THICKNESS REDUCTION CURVE:

$L := 0 .. 11$

$K1_L :=$	$K2_L :=$
0.0	1.271
0.1	1.072
0.2	0.899
0.3	0.759
0.4	0.643
0.5	0.535
0.6	0.419
0.7	0.284
0.8	0.126
0.844	0.0
0.9	0.0
1.0	0.0

K1 = d/T

K2 = (D/T)*[(PO/S)**1/2]

Depth of Indication (d,in): $d_L := K1_L \cdot T$

Diameter of Indication per F: $DxF_L := \frac{K2_L}{X}$

VENT PIPE/VENT HEADER INTERSECTION (AT VENT HEAD),
RANGE OF INDICATION SIZES(FILE NAME:VYVH.MCD)

Depth and Diameter of Indication:

d_L	DxF_L
0	7.678
0.044	6.476
0.088	5.431
0.131	4.585
0.175	3.884
0.219	3.232
0.263	2.531
0.306	1.716
0.35	0.761
0.369	0
0.394	0
0.438	0

GRAPH - DIAMETER OF INDICATION (D,in) VS DEPTH OF INDICATION (d,in)

Thickness available for corrosion (Tcor,in): Tcor := 0.2954

$$d_L := \text{if}\left[d_L < Tcor, Tcor, d_L\right]$$

For Maximum Stressed Shell Element (F = 1.0)

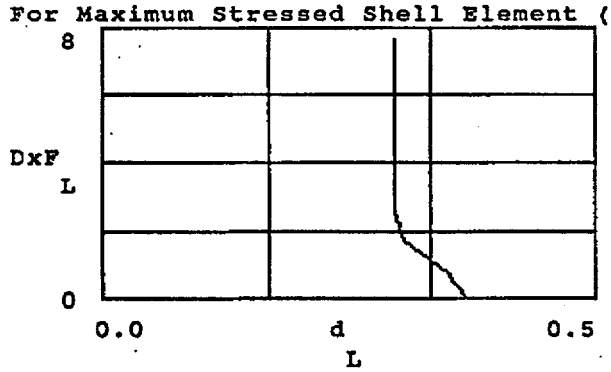

TELEDYNE ENGINEERING SERVICES

BY PHH DATE 12/2/90
CHKD. BY CNS DATE 12/21/90

VERMONT YANKEE
STRESS INTENSIFICATION FACTORS
CALCULATION PACKAGE 7426-2

SHEET NO. 53 OF 56
PROJ. NO. 7426

VENT PIPE/VENT HEADER INTERSECTION (AT VENT HEAD BRANCH),
RANGE OF INDICATION SIZES(FILE NAME:VYVHB.MCD)

PERMISSIBLE REDUCTION IN THICKNESS:

Primary Membrane Stress (Pmax,psi): Pmax := 12900

Minimum Shell Thickness (T,in): T := 0.25

Shell Mean Radius (R,in): R := 40.625

Allowable Stress (S,psi): S := 19300

Equivalent Pressure: $PO := Pmax \cdot \frac{T}{R}$ PO = 79.385

Indication Diameter Factor (X): $X := \frac{1}{T} \cdot \sqrt{\frac{PO}{S}}$ X = 0.257

NORMILIZATION OF THICKNESS REDUCTION CURVE:

L := 0 ..11

$K1_L :=$	$K2_L :=$
0.0	1.271
0.1	1.072
0.2	0.899
0.3	0.759
0.4	0.643
0.5	0.535
0.6	0.419
0.7	0.284
0.8	0.126
0.844	0.0
0.9	0.0
1.0	0.0

K1 = d/T

K2 = (D/T)*[(PO/S)**1/2]

Depth of Indication (d,in): $d_L := K1_L \cdot T$

Diameter of Indication per F: $DxF_L := \frac{K2_L}{X}$

TELEDYNE ENGINEERING SERVICES

BY PHH DATE 12/21/90
CHKD. BY CMS DATE 12/21/90

VERMONT YANKEE
STRESS INTENSIFICATION FACTORS
CALCULATION PACKAGE 7426-2

SHEET NO. 54 OF 56
PROJ. NO. 7426

VENT PIPE/VENT HEADER INTERSECTION (AT VENT HEAD BRANCH),
RANGE OF INDICATION SIZES(FILE NAME:VYVHB.MCD)

Depth and Diameter of Indication:

d_L	DxF_L
0	4.954
0.025	4.179
0.05	3.504
0.075	2.959
0.1	2.506
0.125	2.085
0.15	1.633
0.175	1.107
0.2	0.491
0.211	0
0.225	0
0.25	0

GRAPH - DIAMETER OF INDICATION (D,in) VS DEPTH OF INDICATION (d,in)

Thickness available for corrosion (Tcor,in): Tcor := 0.1196

$$d_L := \text{if}\left[d_L < Tcor, Tcor, d_L\right]$$

For Maximum Stressed Shell Element (F = 1.0)

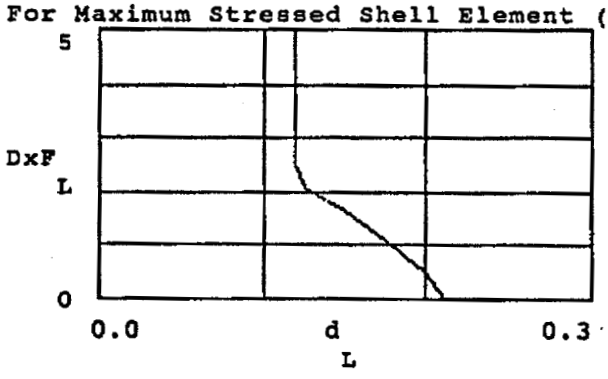

VENT PIPE/VENT HEADER INTERSECTION (ADJACENT TO STIFFENERS),
RANGE OF INDICATION SIZES(FILE NAME:VYSTIF.MCD)

PERMISSIBLE REDUCTION IN THICKNESS:

Primary Membrane Stress (Pmax,psi): $Pmax := 26500$

Minimum Shell Thickness (T,in): $T := 0.25$

Shell Mean Radius (R,in): $R := 40.625$

Allowable Stress (S,psi): $S := 19300$

Equivalent Pressure: $PO := Pmax \cdot \frac{T}{R}$ $PO = 163.077$

Indication Diameter Factor (X): $X := \frac{1}{T} \cdot \sqrt{\frac{PO}{S}}$ $X = 0.368$

NORMILIZATION OF THICKNESS REDUCTION CURVE:

$L := 0 ..11$

$K1_L :=$	$K2_L :=$
0.0	1.271
0.1	1.072
0.2	0.899
0.3	0.759
0.4	0.643
0.5	0.535
0.6	0.419
0.7	0.284
0.8	0.126
0.844	0.0
0.9	0.0
1.0	0.0

$K1 = d/T$

$K2 = (D/T)*[(PO/S)**1/2]$

Depth of Indication (d,in): $d_L := K1_L \cdot T$

Diameter of Indication per F: $DxF_L := \frac{K2_L}{X}$

TELEDYNE ENGINEERING SERVICES

BY PHH DATE 12/21/90
CHKD. BY CNS DATE 12/21/90

VERMONT YANKEE
STRESS INTENSIFICATION FACTORS
CALCULATION PACKAGE 7426-2

SHEET NO. 56 OF 56
PROJ. NO. 7426

VENT PIPE/VENT HEADER INTERSECTION (ADJACENT TO STIFFENERS),
RANGE OF INDICATION SIZES(FILE NAME:VYSTIF.MCD)

Depth and Diameter of Indication:

d_L	DxF_L
0	3.457
0.025	2.916
0.05	2.445
0.075	2.064
0.1	1.749
0.125	1.455
0.15	1.14
0.175	0.772
0.2	0.343
0.211	0
0.225	0
0.25	0

GRAPH - DIAMETER OF INDICATION (D,in) VS DEPTH OF INDICATION (d,in)

Thickness available for corrosion (Tcor,in): Tcor := 0.021

$$d_L := \text{if}\left[d_L < Tcor, Tcor, d_L\right]$$

For Maximum Stressed Shell Element (F = 1.0)

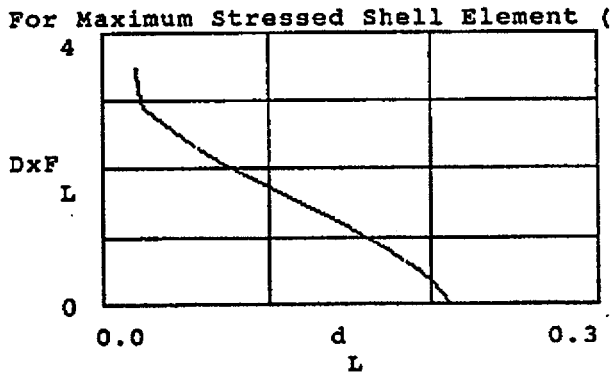

TELEDYNE ENGINEERING SERVICES
CONTROLLED
DOCUMENT

VYG-1032, REV. 1
ATTACHMENT D
TOTAL PGS = 16 incl. cover

TELEDYNE ENGINEERING SERVICES

M

TES PROJ. NO. 7426

DATE 11/22/91

VERIFICATION AND DOCUMENT RELEASE

PROJECT NO.	7426	DATE	December 19, 1990
DOCUMENT ID NO.	7426-3	REV. NO.	0
TYPE OF DOCUMENT	Calculation Package	NUMBER OF PAGES	~~14~~ 15 CMS 12/19/90

TITLE

ABAQUS Verification Calculations for Vermont Yankee Vent Header Analysis

REV DESCRIPTION

None

THE FOLLOWING COMPUTER RUNS APPLY TO THIS DOCUMENT:

	RUN ID	DATE	TIME	PROGRAM NAME/VERSION	SOFTWARE ERROR CHECK
1.	10101AC.DAT	12/3/90	15:11:59	ABAQUS/4-8-5	CMS
2.	10102CD.DAT	12/3/90	15:07:55	ABAQUS/4-8-5	CMS
3.	10105CL.DAT	12/3/90	16:10:30	ABAQUS/4-8-5	CMS
4.	AXIAL.DAT	12/7/90	13:00:50	ABAQUS/4-8-5	CMS
5.	BENDING.DAT	12/12/90	15:44:00	ABAQUS/4-8-5	CMS
6.	TORSION.DAT	12/7/90	11:49:13	ABAQUS/4-8-5	CMS
7.	SHEAR.DAT	12/7/90	12:08:38	ABAQUS/4-8-5	CMS

Computer output filed on TK50 tape.

ORIGINATOR Christina M Shollenberger DATE 12/19/90

CHECKER George Moy DATE 12-19-90

THIS DOCUMENT HAS BEEN VERIFIED AND IS IN COMPLIANCE WITH THE REQUIREMENTS OF THE TES QUALITY ASSURANCE PROGRAM.

VERIFIER George Moy DATE 12-19-90

APPROVED FOR RELEASE

PROJECT MANAGER Richard N Esmo DATE 12-19-90

QAE K M Staley DATE 12-21-90

TELEDYNE ENGINEERING SERVICES

BY CMS DATE 12/18/90
CHKD. BY GM DATE 12/19/90

ABAQUS VERIFICATION CALCULATIONS
CALCULATION PACKAGE 7426-3

ABAQUS VERIFICATION CALCULATIONS

FOR PROJECT 7426

VERMONT YANKEE VENT HEADER ANALYSIS

TELEDYNE ENGINEERING SERVICES
CONTROLLED
DOCUMENT
TES PROJ. NO. 7426
DATE 11/22/91

VYC-1032 ATTACHMENT D

PURPOSE

This calculation is required to satisfy and comply with the requirements of the TES Quality Assurance Manual, section 3.4.2, regarding verification of non-TES-owned computer programs. This verification is accomplished by satisfying the following conditions:

1. The program must give the results the authors intended, on the TES computer

2. The elements and routines used for this project are correct and error free, to the best of our knowledge.

VYC-1032 ATTACHMENT D

METHOD OF ANALYSIS

In order to verify the performance of ABAQUS version 4-8-5 (Reference 1) on the TES Decstation 3100, three arbitrarily selected example problems were analyzed, using input files provided on tape with the program. The problems selected include the Barrel Vault Roof Problem, the pinched cylinder problem, and an example to show skew sensitivity of shell elements. The expected results for these problems are listed in the ABAQUS Example Problems Manual (Reference 2)

To show that the elements and routines required for this project are correct and error free, four simple pipe models were analyzed, under the following load conditions: axial load; bending moment load; torsional moment load; and transverse shear load. These are classic load cases applied to simple geometry, so that the results can be easily verified.

TELEDYNE ENGINEERING SERVICES

BY CMS DATE 12/12/90
CHKD. BY GM DATE 12-19-90

ABAQUS VERIFICATION CALCULATIONS
CALCULATION PACKAGE 7426-3

SHEET NO. 4 OF 15
PROJ. NO. 7426

HKS VERIFICATION PROBLEM 1.1.1-AC

Barrel vault Roof Problem with 20x20 mesh, S8R5 elements

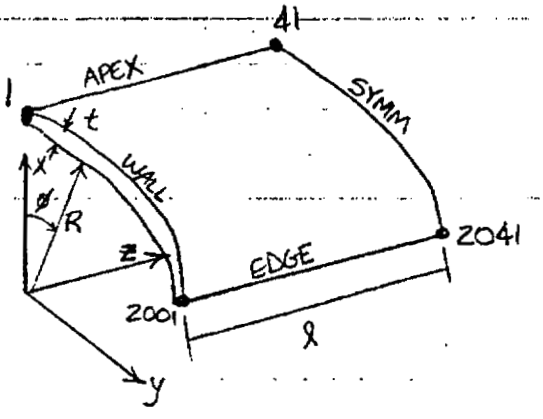

R = 300 in
t = 3 in
ℓ = 300 in

This model represents one quarter of an arched roof supported only at its curved edges (WALL, indicated above) The remainder of the roof is represented by symmetry boundary conditions applied to APEX and SYMM, above. The model uses a cylindrical coordinate system, and the 1 and 2 directions (R and φ, above) are restrained at WALL.

NODE 1: The boundary conditions here require $u_1 = u_2 = ur_1 = ur_3 = 0$. This is verified for the S8R5 element type (computer run 10101ac.dat, Reference 4).

NODE 41: The boundary conditions here require $u_2 = u_3 = ur_1 = ur_2 = ur_3 = 0$. This is verified for the S8R5 element. Also, there is a positive vertical displacement at this node ($u_1 = 0.5424$) as discussed in section 1.1.1 of the ABAQUS Example Problems Manual (Reference 2).

TELEDYNE ENGINEERING SERVICES

BY CMS DATE 12/12/90
CHKD. BY GM DATE 12-19-90

ABAQUS VERIFICATION CALCULATIONS
CALCULATION PACKAGE 7426-3

PROBLEM 1.1.1-AC (continued)

NODE 2001: The boundary conditions here specify $u_1 = u_2 = 0$. For element type S8R5, this is verified in the computer analysis output.

NODE 2041: The boundary conditions here require $u_3 = ur_1 = ur_2 = 0$. For element type S8R5, this is verified in the computer output. This node represents the center of the free edge of the roof, for which the accepted solution is $u_1 = -3.59$ inches. For the S8R5 element, $u_1 = -3.615$ inches. This represents a 0.7% difference, which is acceptable.

This problem is considered to be verified.

TELEDYNE ENGINEERING SERVICES

BY CMS DATE 12/12/90
CHKD. BY GM DATE 12-19-90

ABAQUS VERIFICATION CALCULATIONS
CALCULATION PACKAGE 7426-3

PROJ. NO. 7426

HKS VERIFICATION PROBLEM 1.1.2-CD

Pinched cylinder problem with fine irregular mesh (type 1) S8R5 elements

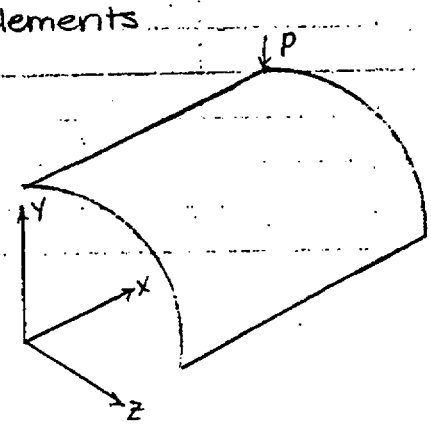

This model represents one eighth of a pinched cylinder with rigid diaphragms at its ends. The remainder of the cylinder is represented by symmetry boundary conditions at the edges. The model uses a cylindrical coordinate system, and the nodes along the fixed end of the cylinder are restrained so that $u_1 = u_2 = 0$.

A comparison of the maximum radial displacement results from computer run 10102cd.dat (Ref 5) with Mesh type 1 displacements from Table 1.1.2-2 of the ABAQUS Example Problems Manual (Ref. 2) shows good agreement. For the S8R5 element with 3366 D.O.F, $u_{1max} = 1.7933 \times 10^{-5}$, while the expected result for this element/DOF is 1.793×10^{-5}, which agrees.

This problem is verified.

TELEDYNE ENGINEERING SERVICES

BY CMS DATE 12/12/90
CHKD. BY GM DATE 12-19-90

ABAQUS VERIFICATION CALCULATIONS
CALCULATION PACKAGE 7426-3

SHEET NO. 7 OF 15
PROJ. NO. 7426

HKS VERIFICATION PROBLEM 1.1.5-CL

Skew sensitivity of shell elements using a simply supported plate with a uniform pressure, 14 x 14 mesh, 80° skew angle, S8R5 elements.

The boundary conditions for this model consist of translational restraints in all three directions ($u_1 = u_2 = u_3 = 0$) along the boundary of the plate.

For the S8R5 element type, the bending moments are $M_{max} = 4.8889 \times 10^{-2}$ and $M_{min} = 4.527 \times 10^{-2}$ at node 1415 (computer run 1010sc1.dat, Ref. 6). Per Table 1.1.5-4 of the ABAQUS Example Problems Manual (Ref. 2) for this mesh and skew angle, $M_{max} = 4.89 \times 10^{-2}$ and $M_{min} = 4.53 \times 10^{-2}$, which agree. The displacement at node 1415 (center of plate) is $w = 1.4126 \times 10^{-3}$, and the value in Table 1.1.5-4 is $w = 1.413 \times 10^{-3}$, which agrees.

This problem is verified.

TELEDYNE ENGINEERING SERVICES

BY CMS DATE 12/13/90
CHKD. BY GM DATE 12-19-90

ABAQUS VERIFICATION CALCULATIONS
CALCULATION PACKAGE 7426-3

SHEET NO. 8 OF 15
PROJ. NO. 7426

VERIFICATION PROBLEM - AXIAL LOAD ON CYLINDER

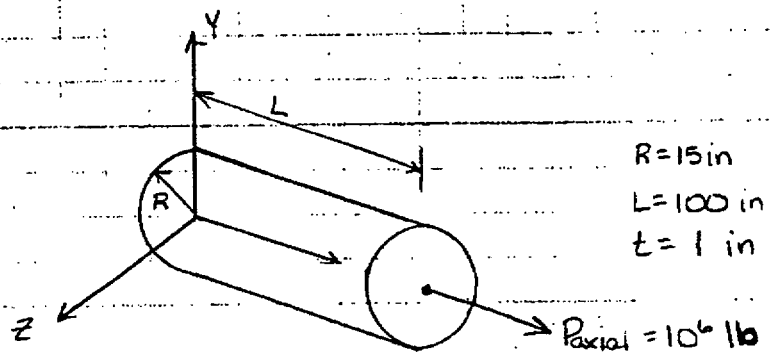

R = 15 in
L = 100 in
t = 1 in

This case was analyzed using a model with 16 elements around the circumference of the cylinder, with S8R5 elements. The load was applied at the center of the cylinder by using MPC equations to join the center node to the edge nodes. The expected stress value for this case corresponds to

$$\sigma = \frac{P}{A} = \frac{10^6 \text{ lb}}{2\pi(15\text{in})(1\text{in})} = 10610 \text{ psi.}$$

For the S8R5 element type (computer run axial.dat, Ref 7) the axial stress at the loaded end of the cylinder is $\sigma_{22} = 10609$ psi, which agrees with the expected value. In the three rings of elements (1 to 48) nearest to the fixed end of the cylinder, the stresses do not match the expected value. This is due to the boundary conditions and discontinuity effects since the nodes at the fixed end are fully restrained and can not displace radially.

The axial loading on the S8R5 element is verified.

TELEDYNE ENGINEERING SERVICES

BY CMS DATE 12/13/90
CHKD. BY GM DATE 12-19-90

ABAQUS VERIFICATION CALCULATIONS
CALCULATION PACKAGE 7426-3

VERIFICATION PROBLEM – BENDING MOMENT ON CYLINDER

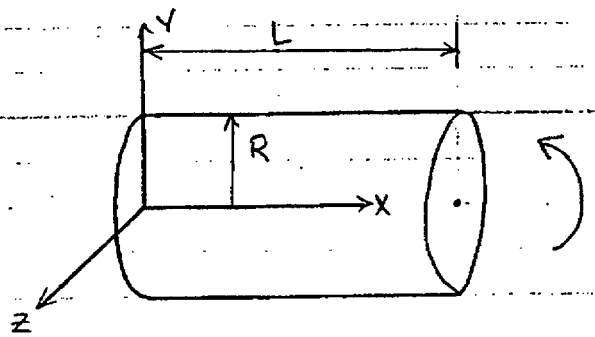

$M_z = 10^6$ in lb

R = 15 in
t = 1 in
L = 100 in

This case was analyzed using a model with 16 elements around the circumference of the cylinder, with S8R5 elements. The load was applied at the center of the cylinder using MPC equations to join the center node to the edge nodes. The expected maximum bending stress for this case is

$$\sigma_{b_{max}} = \pm \frac{Mc}{I} = \frac{(10^6)(15.5)}{\frac{\pi}{4}(15.5^4 - 14.5^4)} = 1460 \text{ psi.}$$

For the S8R5 element type (computer run bending.dat, Ref. 8), the maximum surface stress for the first ring of elements at the restrained end is $S_{11} = \pm 1457$ psi, which agrees with the expected value of $\sigma_{b_{max}} = 1460$ psi. In the middle of the cylinder, $S_{11_{max}}$ varies between 1454 psi and 1462 psi. In the last two rows of elements near the loaded end, $S_{11_{max}}$ varies between 1512 psi and 1604 psi. This represents a 3.6% to 10% error, which can be attributed to the proximity of the applied load.

The bending moment load on the S8R5 element is verified.

TELEDYNE ENGINEERING SERVICES

BY CMS DATE 12/14/90
CHKD. BY GM DATE 12-19-90

ABAQUS VERIFICATION CALCULATIONS
CALCULATION PACKAGE 7426-3

SHEET NO. 10 OF 15
PROJ. NO. 7426

VERIFICATION PROBLEM - TORSIONAL MOMENT ON CYLINDER

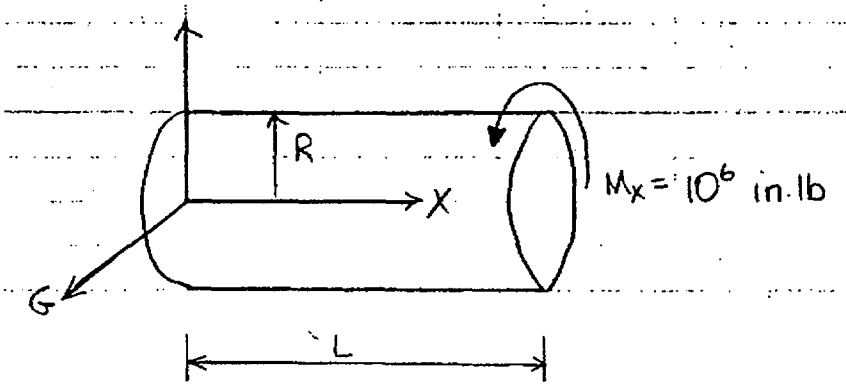

R = 15 in
L = 100 in
t = 1 in

This case was analyzed using a model with 16 elements around the circumference of the cylinder, with S8R5 elements. MPC equations were used to join the edges of the cylinder to the center, and the load was applied at the center node. The expected maximum shear stress for this case is

$$\tau_{max} = \frac{M_x C}{J} = \frac{(10^6)(15.5)}{\frac{\pi}{2}(15.5^4 - 14.5^4)} = 730 \text{ psi}$$

and at the midwall of the cylinder,

$$\tau_{mid} = \frac{M_x C}{J} = \frac{10^6(15)}{\frac{\pi}{2}(15.5^4 - 14.5^4)} = 706.6 \text{ psi}$$

For the S8R5 element type (computer run torsion.dat, Ref. 9), the shear stress at the inside surface of the cylinder is 671 psi, and at the outside surface, $\tau = 742$ psi. These values remain consistent throughout the model, both along the length, and around the circumference.

TELEDYNE ENGINEERING SERVICES

BY CMS DATE 12/7/90
CHKD. BY GM DATE 12-19-90

ABAQUS VERIFICATION CALCULATIONS
CALCULATION PACKAGE 7426-3

TORSIONAL MOMENT ON CYLINDER (CONTINUED)

Averaging these stresses to obtain a value for the midwall of the cylinder, $\tau_{ave} = 706.5$ psi, which agrees with the expected stress at the midwall.

The torsional moment on the S8R5 element is verified.

TELEDYNE ENGINEERING SERVICES

BY CMS DATE 12/17/90 CHKD. BY GM DATE 12-18-90

ABAQUS VERIFICATION CALCULATIONS
CALCULATION PACKAGE 7426-3

SHEET NO. 12 OF 15
PROJ. NO. 7426

VERIFICATION PROBLEM - SHEAR LOAD ON CYLINDER

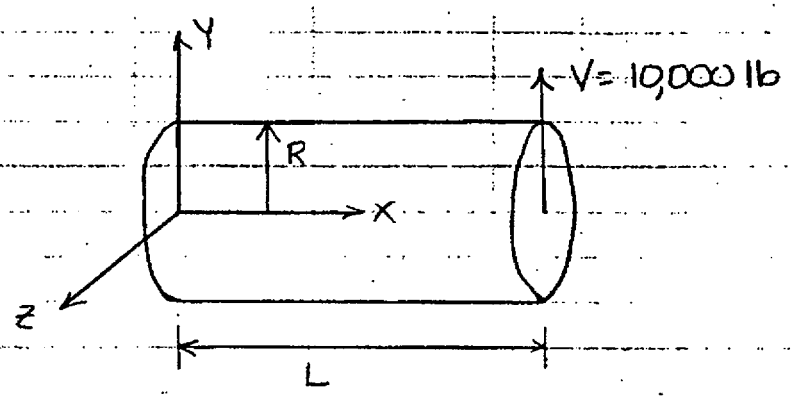

L = 100 in
R = 15 in
t = 1 in

This case was analyzed using a model with 16 elements around the circumference of the cylinder, with S8R5 elements. The load was applied to the center of the cylinder using MPC equations to join the center node to the edge nodes.

The maximum bending stress is 1333 psi (computer run Shear.dat, Ref. 10) at element 15 at the restrained end of the cylinder. The expected stress due to this loading is

$$\sigma_b = \frac{Mc}{I} = \frac{(VL)c}{I}$$

$$= \frac{(10000)(100)(15.5)}{\frac{\pi}{4}(15.5^4 - 14.5^4)} = 1460 \text{ psi.}$$

This represents an error of 8.7% between the two values, which is a reasonable, although not exact, comparison. The cause of this inaccuracy is discussed in Bathe's Finite Element Procedures in Engineering Analysis, page 288 (Reference 3).

TELEDYNE ENGINEERING SERVICES

BY CMS DATE 12/18/90
CHKD. BY GM DATE 12-19-90

ABAQUS VERIFICATION CALCULATIONS
CALCULATION PACKAGE 7426-3

SHEAR LOAD ON CYLINDER (CONTINUED)

The expected shear stress due to this loading is,

$$\tau = \frac{VQ}{It} = \frac{(10000)(450.167)}{(10614.656)(2)} = 212 \text{ psi}$$

The stresses calculated in the first four rows of elements nearest to the fixed end are inaccurate, due to the boundary conditions applied there. In the last six rows, the maximum shear stress varies between 210.2 psi and 222.2 psi, representing an error range of -0.8% to 4.8%, which is acceptable.

Based on the above, the transverse shear load on the S8R5 element is verified.

TELEDYNE ENGINEERING SERVICES

BY CMS DATE 12/18/90
CHKD. BY GM DATE 12-19-90

ABAQUS VERIFICATION CALCULATIONS
CALCULATION PACKAGE 7426-3

CONCLUSION

Based on the results presented within this calculation, shell element type S8R5 and ABAQUS version 4-8-5 on the Decstation 3100 are considered to be verified for use on TES project 7426.

TELEDYNE ENGINEERING SERVICES

BY CMS DATE 12/19/90
CHKD. BY GM DATE 12-19-90

ABAQUS VERIFICATION CALCULATIONS
CALCULATION PACKAGE 7426-3

REFERENCES

1. ABAQUS Finite Element Program Version 4-8-5, developed and licensed by Hibbitt, Karlsson and Sorensen, Inc., Providence, R.I.

2. ABAQUS Example Problems Manual, version 4-8-5.

3. Finite Element Procedures in Engineering Analysis, K.J. Bathe, 1982.

COMPUTER RUNS

4. 10101ac.dat 12/3/90 15:11:59 ABAQUS 4-8-5

5. 10102cd.dat 12/3/90 15:07:55 ABAQUS 4-8-5

6. 10105cl.dat 12/3/90 16:10:30 ABAQUS 4-8-5

7. axial.dat 12/7/90 13:00:50 ABAQUS 4-8-5

8. bending.dat 12/12/90 15:44:00 ABAQUS 4-8-5

9. torsion.dat 12/7/90 11:49:13 ABAQUS 4-8-5

10. shear.dat 12/7/90 12:08:38 ABAQUS 4-8-5

TELEDYNE ENGINEERING SERVICES
CONTROLLED
DOCUMENT
TES PROJ. NO. 7426
DATE 11.29.90

TELEDYNE
ENGINEERING SERVICES

ATTACHMENT E
VYC-1032 REV.1
PG 1 OF 5

PROJECT QA PROGRAM

Project No.: 7426 Project Manager: Richard A. Enos
Initiated on: 11/13/90 Rev.: 0 Date: 11/28/90
Client: Vermont Yankee (VY) Mechanical Engineering Group
Yankee Atomic Electric Company (YAEC)

PROJECT SCOPE

Review Mark I torus analysis documentation for Vermont Yankee to determine corrosion allowance, torus shell and vent header thicknesses used in the TES analysis of record. Determine permissible flaw sizes for torus and vent header shells based on the analysis of record.

Applicable sections of the TES QA Manual dated 6/22/89, Rev. 4, are: 1 through 3, 5, 6 and 16 through 18.

REVISION LEGEND

Revision	Date	Changes in Section
0	11/28/90	Original Issue

REVISION APPROVAL

Project Manager Richard A. Enos Date 11-28-90

QA Manager K M Foley for J J Bukowski Date 11/28/90