JULY 2006

SUPPLEMENT 30 TO NUREG-0933
"A PRIORITIZATION OF GENERIC SAFETY ISSUES"

REVISION INSERTION INSTRUCTIONS

	Remove	Insert
Introduction:	pp. 29 to 68, Rev. 29	pp. 27 to 68, Rev. 30
Section 3:	pp. 3.80-1 to 17, Rev. 3	pp. 3.80-1 to 17, Rev. 4
	pp. 3.185-1 to 19	pp. 3.185-1 to 18, Rev. 1
	pp. 3.188-1 to 6	pp. 3.188-1 to 6, Rev. 1
	pp. 3.194-1 to , Rev. 1	pp. 3.194-1 to 6, Rev. 1
	-	pp. 3.197-1 to 28
References:	pp. R-1 to R-126, Rev. 19	pp. R-1 to R-127, Rev. 20
Appendix B	pp. A.B-1 to 13, Rev. 20	pp. A.B-1 to 13, Rev. 21

AVAILABILITY OF REFERENCE MATERIALS IN NRC PUBLICATIONS

NRC Reference Material

As of November 1999, you may electronically access NUREG-series publications and other NRC records at NRC's Public Electronic Reading Room at http://www.nrc.gov/reading-rm.html. Publicly released records include, to name a few, NUREG-series publications; *Federal Register* notices; applicant, licensee, and vendor documents and correspondence; NRC correspondence and internal memoranda; bulletins and information notices; inspection and investigative reports; licensee event reports; and Commission papers and their attachments.

NRC publications in the NUREG series, NRC regulations, and *Title 10, Energy*, in the Code of *Federal Regulations* may also be purchased from one of these two sources.

1. The Superintendent of Documents
   U.S. Government Printing Office
   Mail Stop SSOP
   Washington, DC 20402–0001
   Internet: bookstore.gpo.gov
   Telephone: 202-512-1800
   Fax: 202-512-2250
2. The National Technical Information Service
   Springfield, VA 22161–0002
   www.ntis.gov
   1–800–553–6847 or, locally, 703–605–6000

A single copy of each NRC draft report for comment is available free, to the extent of supply, upon written request as follows:

Address: U.S. Nuclear Regulatory Commission
Office of Administration
Mail, Distribution and Messenger Team
Washington, DC 20555-0001
E-mail: DISTRIBUTION@nrc.gov
Facsimile: 301–415–2289

Some publications in the NUREG series that are posted at NRC's Web site address http://www.nrc.gov/reading-rm/doc-collections/nuregs are updated periodically and may differ from the last printed version. Although references to material found on a Web site bear the date the material was accessed, the material available on the date cited may subsequently be removed from the site.

Non-NRC Reference Material

Documents available from public and special technical libraries include all open literature items, such as books, journal articles, and transactions, *Federal Register* notices, Federal and State legislation, and congressional reports. Such documents as theses, dissertations, foreign reports and translations, and non-NRC conference proceedings may be purchased from their sponsoring organization.

Copies of industry codes and standards used in a substantive manner in the NRC regulatory process are maintained at—

The NRC Technical Library
Two White Flint North
11545 Rockville Pike
Rockville, MD 20852–2738

These standards are available in the library for reference use by the public. Codes and standards are usually copyrighted and may be purchased from the originating organization or, if they are American National Standards, from—

American National Standards Institute
11 West 42nd Street
New York, NY 10036–8002
www.ansi.org
212–642–4900

Legally binding regulatory requirements are stated only in laws; NRC regulations; licenses, including technical specifications; or orders, not in NUREG-series publications. The views expressed in contractor-prepared publications in this series are not necessarily those of the NRC.

The NUREG series comprises (1) technical and administrative reports and books prepared by the staff (NUREG–XXXX) or agency contractors (NUREG/CR–XXXX), (2) proceedings of conferences (NUREG/CP–XXXX), (3) reports resulting from international agreements (NUREG/IA–XXXX), (4) brochures (NUREG/BR–XXXX), and (5) compilations of legal decisions and orders of the Commission and Atomic and Safety Licensing Boards and of Directors' decisions under Section 2.206 of NRC's regulations (NUREG–0750).

TABLE II

LISTING OF ALL TMI ACTION PLAN ITEMS, TASK ACTION PLAN ITEMS, NEW GENERIC ISSUES, HUMAN FACTORS ISSUES, AND CHERNOBYL ISSUES

This table contains the priority designations for all issues listed in this report. For those issues found to be covered in other issues described in this document, the appropriate notations have been made in the Safety Priority Ranking column, e.g., I.A.2.2 in the Safety Priority Ranking column means that Item I.A.2.6(3) is covered in Item I.A.2.2. For those issues found to be covered in programs not described in this document, the notation (S) was made in the Safety Priority Ranking column. For resolved issues that have resulted in new requirements for operating plants, the appropriate multiplant licensing action number is listed. The licensing action numbering system bears no relationship to the numbering systems used for identifying the prioritized issues. An explanation of the classification and status of the issues is provided in the legend below.

Legend

NOTES:	1 - Possible Resolution Identified for Evaluation
	2 - Resolution Available (Documented in NUREG, NRC Memorandum, SER, or equivalent)
	3 - Resolution Resulted in either: (a) The Establishment of New Regulatory Requirements (By Rule, SRP Change, or equivalent) or (b) No New Requirements
	4 - Issue to be Prioritized in the Future
	5 - Issue that is not a Generic Safety Issue but should be Assigned Resources for Completion
HIGH	- High Safety Priority
MEDIUM	- Medium Safety Priority
LOW	- Low Safety Priority
DROP	- Issue Dropped as a Generic Issue
EI	- Environmental Issue
I	- Resolved TMI Action Plan Item with Implementation of Resolution Mandated by NUREG-0737
LI	- Licensing Issue
MPA	- Multiplant Action
NA	- Not Applicable
RI	- Regulatory Impact Issue
S	- Issue Covered in an NRC Program Outside the Scope of This Document
USI	- Unresolved Safety Issue
Continue	- As defined in NRC Management Directive 6.4[1858]

Table II (Continued)

Action Plan Item/ Issue No.	Title	Priority Analyst	Lead Office/ Division/ Branch	Safety Priority Ranking	Latest Rev.	Latest Issuance Date	MPA No.
			TMI ACTION PLAN ITEMS				
I.A	OPERATING PERSONNEL						
I.A.1	Operating Personnel and Staffing						
I.A.1.1	Shift Technical Advisor	-	NRR/DHFS/LQB	I	3	12/31/97	F-01
I.A.1.2	Shift Supervisor Administrative Duties	-	NRR/DHFS/LQB	I	3	12/31/97	
I.A.1.3	Shift Manning	-	NRR/DHFS/LQB	I	3	12/31/97	F-02
I.A.1.4	Long-Term Upgrading	R. Colmar	RES/DFO/HFBR	NOTE 3(a)	3	12/31/97	
I.A.2	Training and Qualifications of Operating Personnel						
I.A.2.1	Immediate Upgrading of Operator and Senior Operator Training and Qualifications	-	-	-			
I.A.2.1(1)	Qualifications - Experience	-	NRR/DHFS/LQB	I	6	12/31/97	F-03
I.A.2.1(2)	Training	-	NRR/DHFS/LQB	I	6	12/31/97	F-03
I.A.2.1(3)	Facility Certification of Competence and Fitness of Applicants for Operator and Senior Operator Licenses	-	NRR/DHFS/LQB	I	6	12/31/97	F-03
I.A.2.2	Training and Qualifications of Operations Personnel	R. Colmar	NRR/DHFS/LQB	NOTE 3(b)	6	12/31/97	NA
I.A.2.3	Administration of Training Programs	-	NRR/DHFS/LQB	I	6	12/31/97	
I.A.2.4	NRR Participation in Inspector Training	R. Colmar	NRR/DHFS/LQB	LI (NOTE 3)	6	12/31/97	NA
I.A.2.5	Plant Drills	R. Colmar	NRR/DHFS/LQB	NOTE 3(b)	6	12/31/97	NA
I.A.2.6	Long-Term Upgrading of Training and Qualifications	-	-	-			
I.A.2.6(1)	Revise Regulatory Guide 1.8	R. Colmar	NRR/DHFT/HFIB	NOTE 3(a)	6	12/31/97	NA
I.A.2.6(2)	Staff Review of NRR 80-117	R. Colmar	NRR/DHFS/LQB	NOTE 3(b)	6	12/31/97	NA
I.A.2.6(3)	Revise 10 CFR 55	R. Colmar	NRR/DHFS/LQB	I.A.2.2	6	12/31/97	NA
I.A.2.6(4)	Operator Workshops	R. Colmar	NRR/DHFS/LQB	NOTE 3(b)	6	12/31/97	NA
I.A.2.6(5)	Develop Inspection Procedures for Training Program	R. Colmar	NRR/DHFS/LQB	NOTE 3(b)	6	12/31/97	NA
I.A.2.6(6)	Nuclear Power Fundamentals	R. Colmar	NRR/DHFS/LQB	DROP	6	12/31/97	NA
I.A.2.7	Accreditation of Training Institutions	R. Colmar	NRR/DHFS/LQB	NOTE 3(b)	6	12/31/97	NA
I.A.3	Licensing and Requalification of Operating Personnel						
I.A.3.1	Revise Scope of Criteria for Licensing Examinations	R. Emrit	NRR/DHFS/LQB	I	6	12/31/97	
I.A.3.2	Operator Licensing Program Changes	R. Emrit	NRR/DHFS/OLB	NOTE 3(b)	6	12/31/97	NA
I.A.3.3	Requirements for Operator Fitness	R. Colmar	RES/DRAO/HFSB	NOTE 3(b)	6	12/31/97	NA
I.A.3.4	Licensing of Additional Operations Personnel	D. Thatcher	NRR/DHFS/LQB	NOTE 3(b)	6	12/31/97	NA
I.A.3.5	Establish Statement of Understanding with INPO and DOE	D. Thatcher	NRR/DHFS/HFEB	LI (NOTE 3)	6	12/31/97	NA
I.A.4	Simulator Use and Development						
I.A.4.1	Initial Simulator Improvement	-	-	-			
I.A.4.1(1)	Short-Term Study of Training Simulators	D. Thatcher	NRR/DHFS/OLB	NOTE 3(b)	6	12/31/97	NA
I.A.4.1(2)	Interim Changes in Training Simulators	D. Thatcher	NRR/DHFS/OLB	NOTE 3(a)	6	12/31/97	

Table II (Continued)

Action Plan Item/ Issue No.	Title	Priority Analyst	Lead Office/ Division/ Branch	Safety Priority Ranking	Latest Rev.	Latest Issuance Date	MPA No.
I.A.4.2	Long-Term Training Simulator Upgrade	-	-	-			
I.A.4.2(1)	Research on Training Simulators	R. Colmar	NRR/DHFT/HFIB	NOTE 3(a)	6	12/31/97	
I.A.4.2(2)	Upgrade Training Simulator Standards	R. Colmar	RES/DFO/HFBR	NOTE 3(a)	6	12/31/97	
I.A.4.2(3)	Regulatory Guide on Training Simulators	R. Colmar	RES/DFO/HFBR	NOTE 3(a)	6	12/31/97	
I.A.4.2(4)	Review Simulators for Conformance to Criteria	R. Colmar	NRR/DLPQ/LOLB	NOTE 3(a)	6	12/31/97	
I.A.4.3	Feasibility Study of Procurement of NRC Training Simulator	R. Colmar	RES/DAE/RSRB	LI (NOTE 3)	6	12/31/97	NA
I.A.4.4	Feasibility Study of NRC Engineering Computer	R. Colmar	RES/DAE/RSRB	LI (NOTE 3)	6	12/31/97	NA
I.B.	SUPPORT PERSONNEL						
I.B.1	Management for Operations						
I.B.1.1	Organization and Management Long-Term Improvements	-	-	-			
I.B.1.1(1)	Prepare Draft Criteria	R. Colmar	NRR/DHFT/HFIB	NOTE 3(b)	4	12/31/97	NA
I.B.1.1(2)	Prepare Commission Paper	R. Colmar	NRR/DHFT/HFIB	NOTE 3(b)	4	12/31/97	NA
I.B.1.1(3)	Issue Requirements for the Upgrading of Management and Technical Resources	R. Colmar	NRR/DHFT/HFIB	NOTE 3(b)	4	12/31/97	NA
I.B.1.1(4)	Review Responses to Determine Acceptability	R. Colmar	NRR/DHFT/HFIB	NOTE 3(b)	4	12/31/97	NA
I.B.1.1(5)	Review Implementation of the Upgrading Activities	R. Colmar	OIE/DQASIP/ORPB	NOTE 3(b)	4	12/31/97	NA
I.B.1.1(6)	Prepare Revisions to Regulatory Guides 1.33 and 1.8	R. Colmar	NRR/DHFS/LQB	I.A.2.6(1), 75	4	12/31/97	NA
I.B.1.1(7)	Issue Regulatory Guides 1.33 and 1.8	R. Colmar	NRR/DHFS/LQB	I.A.2.6(1), 75	4	12/31/97	NA
I.B.1.2	Evaluation of Organization and Management Improvements of Near-Term Operating License Applicants		- -	-			
I.B.1.2(1)	Prepare Draft Criteria	-	NRR/DHFS/LQB	NOTE 3(b)	4	12/31/97	NA
I.B.1.2(2)	Review Near-Term Operating License Facilities	-	NRR/DHFS/LQB	NOTE 3(b)	4	12/31/97	NA
I.B.1.2(3)	Include Findings in the SER for Each Near-Term Operating License Facility	-	NRR/DL/ORAB	NOTE 3(b)	4	12/13/97	NA
I.B.1.3	Loss of Safety Function	-	-	-			
I.B.1.3(1)	Require Licensees to Place Plant in Safest Shutdown Cooling Following a Loss of Safety Function Due to Personnel Error	G. Sege	RES	LI (NOTE 3)	4	12/31/97	NA
I.B.1.3(2)	Use Existing Enforcement Options to Accomplish Safest Shutdown Cooling	G. Sege	RES	LI (NOTE 3)	4	12/31/97	NA
I.B.1.3(3)	Use Non-Fiscal Approaches to Accomplish Safest Shutdown Cooling	G. Sege	RES	LI (NOTE 3)	4	12/31/97	NA
I.B.2	Inspection of Operating Reactors						
I.B.2.1	Revise OIE Inspection Program	-	-	-			
I.B.2.1(1)	Verify the Adequacy of Management and Procedural Controls and Staff Discipline	G. Sege	OIE/DQASIP/RCPB	LI (NOTE 3)	1	12/31/97	NA

Table II (Continued)

Action Plan Item/ Issue No.	Title	Priority Analyst	Lead Office/ Division/ Branch	Safety Priority Ranking	Latest Rev.	Latest Issuance Date	MPA No.
I.B.2.1(2)	Verify that Systems Required to Be Operable Are Properly Aligned	G. Sege	OIE/DQASIP/RCPB	LI (NOTE 3)	1	12/31/97	NA
I.B.2.1(3)	Follow-up on Completed Maintenance Work Orders to Assure Proper Testing and Return to Service	G. Sege	OIE/DQASIP/RCPB	LI (NOTE 3)	1	12/31/97	NA
I.B.2.1(4)	Observe Surveillance Tests to Determine Whether Test Instruments Are Properly Calibrated	G. Sege	OIE/DQASIP/RCPB	LI (NOTE 3)	1	12/31/97	NA
I.B.2.1(5)	Verify that Licensees Are Complying with Technical Specifications	G. Sege	OIE/DQASIP/RCPB	LI (NOTE 3)	1	12/31/97	NA
I.B.2.1(6)	Observe Routine Maintenance	G. Sege	OIE/DQASIP/RCPB	LI (NOTE 3)	1	12/31/97	NA
I.B.2.1(7)	Inspect Terminal Boards, Panels, and Instrument Racks for Unauthorized Jumpers and Bypasses	G. Sege	OIE/DQASIP/RCPB	LI (NOTE 3)	1	12/31/97	NA
I.B.2.2	Resident Inspector at Operating Reactors	G. Sege	OIE/DQASIP/ORPB	LI (NOTE 3)	1	12/31/97	NA
I.B.2.3	Regional Evaluations	G. Sege	OIE/DQASIP/ORPB	LI (NOTE 3)	1	12/31/97	NA
I.B.2.4	Overview of Licensee Performance	G. Sege	OIE/DQASIP/ORPB	LI (NOTE 3)	1	12/31/97	NA
I.C	OPERATING PROCEDURES						
I.C.1	Short-Term Accident Analysis and Procedures Revision	-	-	-			
I.C.1(1)	Small Break LOCAs	-	NRR	I	4	12/31/97	
I.C.1(2)	Inadequate Core Cooling	-	NRR	I	4	12/31/97	F-04
I.C.1(3)	Transients and Accidents	-	NRR	I	4	12/31/97	F-05
I.C.1(4)	Confirmatory Analyses of Selected Transients	R. Riggs	NRR/DSI/RSB	NOTE 3(b)	4	12/31/97	NA
I.C.2	Shift and Relief Turnover Procedures	-	NRR	I	4	12/31/97	
I.C.3	Shift Supervisor Responsibilities	-	NRR	I	4	12/31/97	
I.C.4	Control Room Access	-	NRR	I	4	12/31/97	
I.C.5	Procedures for Feedback of Operating Experience to - Plant Staff		NRR/DL	I	4	12/31/97	F-06
I.C.6	Procedures for Verification of Correct Performance of - Operating Activities		NRR/DL	I	4	12/31/97	F-07
I.C.7	NSSS Vendor Review of Procedures	-	NRR/DHFS/PSRB	I	4	12/31/97	
I.C.8	Pilot Monitoring of Selected Emergency Procedures for Near-Term Operating License Applicants	-	NRR/DHFS/PSRB	I	4	12/31/97	
I.C.9	Long-Term Program Plan for Upgrading of Procedures	R. Riggs	NRR/DHFS/PSRB	NOTE 3(b)	4	12/31/97	NA
I.D	CONTROL ROOM DESIGN						
I.D.1	Control Room Design Reviews	-	NRR/DL	I	8	12/31/97	F-08
I.D.2	Plant Safety Parameter Display Console	-	NRR/DL	I	8	12/31/97	F-09
I.D.3	Safety System Status Monitoring	D. Thatcher	RES/DE/MEB	NOTE 3(b)	8	12/31/97	NA
I.D.4	Control Room Design Standard	D. Thatcher	RES/DRPS/RHFB	NOTE 3(b)	8	12/31/97	NA
I.D.5	Improved Control Room Instrumentation Research	-	-	-			

Table II (Continued)

Action Plan Item/ Issue No.	Title	Priority Analyst	Lead Office/ Division/ Branch	Safety Priority Ranking	Latest Rev.	Latest Issuance Date	MPA No.
I.D.5(1)	Operator-Process Communication	D. Thatcher	RES/DFO/HFBR	NOTE 3(b)	8	12/31/97	NA
I.D.5(2)	Plant Status and Post-Accident Monitoring	D. Thatcher	RES/DFO/HFBR	NOTE 3(a)	8	12/31/97	
I.D.5(3)	On-Line Reactor Surveillance System	D. Thatcher	RES/DE/MEB	NOTE 3(b)	8	12/31/97	NA
I.D.5(4)	Process Monitoring Instrumentation	D. Thatcher	RES/DFO/ICBR	NOTE 3(b)	8	12/31/97	NA
I.D.5(5)	Disturbance Analysis Systems	D. Thatcher	RES/DRPS/RHFB	LI (NOTE 3)	8	12/31/97	NA
I.D.6	Technology Transfer Conference	D. Thatcher	RES/DFO/HFBR	LI (NOTE 3)	8	12/31/97	NA
I.E	ANALYSIS AND DISSEMINATION OF OPERATING EXPERIENCE						
I.E.1	Office for Analysis and Evaluation of Operational Data	P. Matthews	AEOD/PTB	LI (NOTE 3)	3	12/31/97	NA
I.E.2	Program Office Operational Data Evaluation	P. Matthews	NRR/DL/ORAB	LI (NOTE 3)	3	12/31/97	NA
I.E.3	Operational Safety Data Analysis	P. Matthews	RES/DRA/RRBR	LI (NOTE 3)	3	12/31/97	NA
I.E.4	Coordination of Licensee, Industry, and Regulatory Programs	P. Matthews	AEOD/PTB	LI (NOTE 3)	3	12/31/97	NA
I.E.5	Nuclear Plant Reliability Data System	P. Matthews	AEOD/PTB	LI (NOTE 3)	3	12/31/97	NA
I.E.6	Reporting Requirements	P. Matthews	AEOD/PTB	LI (NOTE 3)	3	12/31/97	NA
I.E.7	Foreign Sources	P. Matthews	IP	LI (NOTE 3)	3	12/31/97	NA
I.E.8	Human Error Rate Analysis	P. Matthews	RES/DFO/HFBR	LI (NOTE 3)	3	12/31/97	NA
I.F	QUALITY ASSURANCE						
I.F.1	Expand QA List	J. Pittman	RES/DRA/ARGIB	NOTE 3(b)	4	12/31/98	NA
I.F.2	Develop More Detailed QA Criteria	-	-	-			
I.F.2(1)	Assure the Independence of the Organization Performing the Checking Function	J. Pittman	OIE/DQASIP/QUAB	LOW	4	12/31/98	NA
I.F.2(2)	Include QA Personnel in Review and Approval of Plant Procedures	J. Pittman	OIE/DQASIP/QUAB	NOTE 3(a)	4	12/31/98	NA
I.F.2(3)	Include QA Personnel in All Design, Construction, Installation, Testing, and Operation Activities	J. Pittman	OIE/DQASIP/QUAB	NOTE 3(a)	4	12/31/98	NA
I.F.2(4)	Establish Criteria for Determining QA Requirements for Specific Classes of Equipment	J. Pittman	OIE/DQASIP/QUAB	LOW	4	12/31/98	NA
I.F.2(5)	Establish Qualification Requirements for QA and QC Personnel	J. Pittman	OIE/DQASIP/QUAB	LOW	4	12/31/98	NA
I.F.2(6)	Increase the Size of Licensees' QA Staff	J. Pittman	OIE/DQASIP/QUAB	NOTE 3(a)	4	12/31/98	NA
I.F.2(7)	Clarify that the QA Program Is a Condition of the Construction Permit and Operating License	J. Pittman	OIE/DQASIP/QUAB	LOW	4	12/31/98	NA
I.F.2(8)	Compare NRC QA Requirements with Those of Other Agencies	J. Pittman	OIE/DQASIP/QUAB	LOW	4	12/31/98	NA

Table II (Continued)

Action Plan Item/ Issue No.	Title	Priority Analyst	Lead Office/ Division/ Branch	Safety Priority Ranking	Latest Rev.	Latest Issuance Date	MPA No.
I.F.2(9)	Clarify Organizational Reporting Levels for the QA Organization	J. Pittman	OIE/DQASIP/QUAB	NOTE 3(a)	4	12/31/98	NA
I.F.2(10)	Clarify Requirements for Maintenance of "As-Built" Documentation	J. Pittman	OIE/DQASIP/QUAB	LOW	4	12/30/98	NA
I.F.2(11)	Define Role of QA in Design and Analysis Activities	J. Pittman	OIE/DQASIP/QUAB	LOW	4	12/30/98	NA
I.G	PREOPERATIONAL AND LOW-POWER TESTING						
I.G.1	Training Requirements	-	NRR/DHFS/PSRB	I	3	12/31/97	
I.G.2	Scope of Test Program	H. Vandermolen	NRR/DHFS/PSRB	NOTE 3(a)	3	12/31/97	NA
II.A	SITING						
II.A.1	Siting Policy Reformulation	H. Vandermolen	NRR/DE/SAB	NOTE 3(b)	2	12/31/97	NA
II.A.2	Site Evaluation of Existing Facilities	H. Vandermolen	NRR/DE/SAB	V.A.1	2	12/31/97	NA
II.B	CONSIDERATION OF DEGRADED OR MELTED CORES IN SAFETY REVIEW						
II.B.1	Reactor Coolant System Vents	-	NRR/DL	I	4	12/31/97	F-10
II.B.2	Plant Shielding to Provide Access to Vital Areas and Protect Safety Equipment for Post-Accident Operation	-	NRR/DL	I	4	12/31/97	F-11
II.B.3	Post-Accident Sampling	-	NRR/DL	I	4	12/31/97	F-12
II.B.4	Training for Mitigating Core Damage	-	NRR/DL	I	4	12/31/97	F-13
II.B.5	Research on Phenomena Associated with Core Degradation and Fuel Melting	-	-	-			
II.B.5(1)	Behavior of Severely Damaged Fuel	H. Vandermolen	RES/DSR/AEB	LI (NOTE 5)	4	12/31/97	NA
II.B.5(2)	Behavior of Core-Melt	H. Vandermolen	RES/DSR/AEB	LI (NOTE 5)	4	12/31/97	NA
II.B.5(3)	Effect of Hydrogen Burning and Explosions on Containment Structure	H. Vandermolen	RES/DSR/AEB	LI (NOTE 5)	4	12/31/97	NA
II.B.6	Risk Reduction for Operating Reactors at Sites with High Population Densities	J. Pittman	NRR/DST/RRAB	NOTE 3(a)	4	12/31/97	
II.B.7	Analysis of Hydrogen Control	P. Matthews	NRR/DSI/CSB	II.B.8	4	12/31/97	
II.B.8	Rulemaking Proceeding on Degraded Core Accidents	H. Vandermolen	RES/DRAO/RAMR	NOTE 3(a)	4	12/31/97	
II.C	RELIABILITY ENGINEERING AND RISK ASSESSMENT						
II.C.1	Interim Reliability Evaluation Program	J. Pittman	RES/DRAO/RRB	NOTE 3(b)	3	12/31/97	NA
II.C.2	Continuation of Interim Reliability Evaluation Program	J. Pittman	NRR/DST/RRAB	NOTE 3(b)	3	12/31/97	NA
II.C.3	Systems Interaction	J. Pittman	NRR/DST/GIB	A-17	3	12/31/97	NA
II.C.4	Reliability Engineering	J. Pittman	RES/DRPS/RHFB	NOTE 3(b)	3	12/31/97	NA

Table II (Continued)

Action Plan Item/ Issue No.	Title	Priority Analyst	Lead Office/ Division/ Branch	Safety Priority Ranking	Latest Rev.	Latest Issuance Date	MPA No.
II.D	REACTOR COOLANT SYSTEM RELIEF AND SAFETY VALVES						
II.D.1	Testing Requirements	-	NRR/DL	I	3	12/31/98	F-14
II.D.2	Research on Relief and Safety Valve Test Requirements	R. Riggs	RES	LOW	3	12/31/98	NA
II.D.3	Relief and Safety Valve Position Indication	-	NRR	I	3	12/31/98	
II.E	SYSTEM DESIGN						
II.E.1	Auxiliary Feedwater System						
II.E.1.1	Auxiliary Feedwater System Evaluation	-	NRR/DL	I	2	12/31/97	F-15
II.E.1.2	Auxiliary Feedwater System Automatic Initiation and Flow Indication	-	NRR/DL	I	2	12/31/97	F-16, F-17
II.E.1.3	Update Standard Review Plan and Develop Regulatory Guide	R. Riggs	RES/DRA/RRBR	NOTE 3(a)	2	12/31/97	
II.E.2	Emergency Core Cooling System						
II.E.2.1	Reliance on ECCS	R. Riggs	NRR/DSI/RSB	II.K.3(17)	3	12/31/98	NA
II.E.2.2	Research on Small Break LOCAs and Anomalous Transients	R. Riggs	RES/DAE/RSRB	NOTE 3(b)	3	12/31/98	NA
II.E.2.3	Uncertainties in Performance Predictions	H. Vandermolen	NRR/DSI/RSB	LOW	3	12/31/98	NA
II.E.3	Decay Heat Removal						
II.E.3.1	Reliability of Power Supplies for Natural Circulation	-	NRR/DL	I	2	12/31/97	
II.E.3.2	Systems Reliability	H. Vandermolen	NRR/DST/GIB	A-45	2	12/31/97	NA
II.E.3.3	Coordinated Study of Shutdown Heat Removal Requirements	H. Vandermolen	NRR/DST/GIB	A-45	2	12/31/97	NA
II.E.3.4	Alternate Concepts Research	R. Riggs	RES/DAE/FBRB	NOTE 3(b)	2	12/31/97	NA
II.E.3.5	Regulatory Guide	R. Riggs	NRR/DST/GIB	A-45	2	12/31/97	NA
II.E.4	Containment Design						
II.E.4.1	Dedicated Penetrations	-	NRR/DL	I	2	12/31/97	F-18
II.E.4.2	Isolation Dependability	-	NRR/DL	I	2	12/31/97	F-19
II.E.4.3	Integrity Check	W. Milstead	RES/DRPS/RPSI	NOTE 3(b)	2	12/31/97	NA
II.E.4.4	Purging	-	-	-			
II.E.4.4(1)	Issue Letter to Licensees Requesting Limited Purging	W. Milstead	NRR/DSI/CSB	NOTE 3(a)	2	12/31/97	
II.E.4.4(2)	Issue Letter to Licensees Requesting Information on Isolation Letter	W. Milstead	NRR/DSI/CSB	NOTE 3(a)	2	12/31/97	
II.E.4.4(3)	Issue Letter to Licensees on Valve Operability	W. Milstead	NRR/DSI/CSB	NOTE 3(a)	2	12/31/97	
II.E.4.4(4)	Evaluate Purging and Venting During Normal Operation	W. Milstead	NRR/DSI/CSB	NOTE 3(b)	2	12/31/97	NA
II.E.4.4(5)	Issue Modified Purging and Venting Requirement	W. Milstead	NRR/DSI/CSB	NOTE 3(b)	2	12/31/97	NA

Table II (Continued)

Action Plan Item/ Issue No.	Title	Priority Analyst	Lead Office/ Division/ Branch	Safety Priority Ranking	Latest Rev.	Latest Issuance Date	MPA No.
II.E.5	Design Sensitivity of B&W Reactors						
II.E.5.1	Design Evaluation	D. Thatcher	NRR/DSI/RSB	NOTE 3(a)	2	12/31/98	
II.E.5.2	B&W Reactor Transient Response Task Force	D. Thatcher	NRR/DL/ORAB	NOTE 3(a)	2	12/31/98	
II.E.6	In Situ Testing of Valves						
II.E.6.1	Test Adequacy Study	D. Thatcher	RES/DE/EIB	NOTE 3(a)	2	12/31/98	
II.F	INSTRUMENTATION AND CONTROLS						
II.F.1	Additional Accident Monitoring Instrumentation	-	NRR/DL	I	3	12/31/98	F-20, F-21, F-22, F-23, F-24, F-25
II.F.2	Identification of and Recovery from Conditions Leading to Inadequate Core Cooling	-	NRR/DL	I	3	12/31/98	F-26
II.F.3	Instruments for Monitoring Accident Conditions	H. Vandermolen	RES/DFO/ICBR	NOTE 3(a)	3	12/31/98	
II.F.4	Study of Control and Protective Action Design Requirements	D. Thatcher	NRR/DSI/ICSB	DROP	3	12/31/98	NA
II.F.5	Classification of Instrumentation, Control, and Electrical Equipment	D. Thatcher	RES/DE	LI (NOTE 3)	3	12/31/98	NA
II.G	ELECTRICAL POWER						
II.G.1	Power Supplies for Pressurizer Relief Valves, Block Valves, and Level Indicators	-	NRR	I	1	12/31/98	NA
II.H	TMI-2 CLEANUP AND EXAMINATION						
II.H.1	Maintain Safety of TMI-2 and Minimize Environmental Impact	P. Matthews	NRR/TMIPO	NOTE 3(b)	3	12/31/98	NA
II.H.2	Obtain Technical Data on the Conditions Inside the TMI-2 Containment Structure	W. Milstead	RES/DRAA/AEB	NOTE 3(b)	3	12/31/98	NA
II.H.3	Evaluate and Feed Back Information Obtained from TMI	W. Milstead	NRR/TMIPO	II.H.2	3	12/31/98	NA
II.H.4	Determine Impact of TMI on Socioeconomic and Real Property Values	W. Milstead	RES/DHSWM/SEBR	LI (NOTE 3)	3	12/31/98	NA

Table II (Continued)

Action Plan Item/ Issue No.	Title	Priority Analyst	Lead Office/ Division/ Branch	Safety Priority Ranking	Latest Rev.	Latest Issuance Date	MPA No.
II.J	GENERAL IMPLICATIONS OF TMI FOR DESIGN AND CONSTRUCTION ACTIVITIES						
II.J.1	Vendor Inspection Program						
II.J.1.1	Establish a Priority System for Conducting Vendor Inspections	L. Riani	OIE/DQASIP	LI (NOTE 3)	1	12/31/98	NA
II.J.1.2	Modify Existing Vendor Inspection Program	L. Riani	OIE/DQASIP	LI (NOTE 3)	1	12/31/98	NA
II.J.1.3	Increase Regulatory Control Over Present Non-Licensees	L. Riani	OIE/DQASIP	LI (NOTE 3)	1	12/31/98	NA
II.J.1.4	Assign Resident Inspectors to Reactor Vendors and Architect-Engineers	L. Riani	OIE/DQASIP	LI (NOTE 3)	1	12/31/98	NA
II.J.2	Construction Inspection Program						
II.J.2.1	Reorient Construction Inspection Program	L. Riani	OIE/DQASIP	LI (NOTE 3)	1	12/31/98	NA
II.J.2.2	Increase Emphasis on Independent Measurement in Construction Inspection Program	L. Riani	OIE/DQASIP	LI (NOTE 3)	1	12/31/98	NA
II.J.2.3	Assign Resident Inspectors to All Construction Sites	L. Riani	OIE/DQASIP	LI (NOTE 3)	1	12/31/98	NA
II.J.3	Management for Design and Construction						
II.J.3.1	Organization and Staffing to Oversee Design and Construction	J. Pittman	NRR/DHFS/LQB	I.B.1.1	1	12/31/98	NA
II.J.3.2	Issue Regulatory Guide	J. Pittman	NRR/DHFS/LQB	I.B.1.1	1	12/31/98	NA
II.J.4	Revise Deficiency Reporting Requirements						
II.J.4.1	Revise Deficiency Reporting Requirements	L. Riani	AEOD/DSP/ROAB	NOTE 3(a)	3	12/31/98	NA
II.K	MEASURES TO MITIGATE SMALL-BREAK LOSS-OF-COOLANT ACCIDENTS AND LOSS-OF-FEEDWATER ACCIDENTS						
II.K.1	IE Bulletins	-	-	-			
II.K.1(1)	Review TMI-2 PNs and Detailed Chronology of the TMI-2 Accident	R. Emrit	NRR	NOTE 3(a)		12/31/84	-
II.K.1(2)	Review Transients Similar to TMI-2 That Have Occurred at Other Facilities and NRC Evaluation of Davis-Besse Event	R. Emrit	NRR	NOTE 3(a)		12/31/84	-
II.K.1(3)	Review Operating Procedures for Recognizing, Preventing, and Mitigating Void Formation in Transients and Accidents	R. Emrit	NRR	NOTE 3(a)		12/31/84	-
II.K.1(4)	Review Operating Procedures and Training Instructions	R. Emrit	NRR	NOTE 3(a)		12/31/84	-
II.K.1(5)	Safety-Related Valve Position Description	R. Emrit	NRR	NOTE 3(a)		12/31/84	-

Table II (Continued)

Action Plan Item/ Issue No.	Title	Priority Analyst	Lead Office/ Division/ Branch	Safety Priority Ranking	Latest Rev.	Latest Issuance Date	MPA No.
II.K.1(6)	Review Containment Isolation Initiation Design and Procedures	R. Emrit	NRR	NOTE 3(a)		12/31/84	-
II.K.1(7)	Implement Positive Position Controls on Valves That Could Compromise or Defeat AFW Flow	R. Emrit	NRR	NOTE 3(a)		12/31/84	-
II.K.1(8)	Implement Procedures That Assure Two Independent 100% AFW Flow Paths	R. Emrit	NRR	NOTE 3(a)		12/31/84	-
II.K.1(9)	Review Procedures to Assure That Radioactive Liquids and Gases Are Not Transferred out of Containment Inadvertently	R. Emrit	NRR	NOTE 3(a)		12/31/84	-
II.K.1(10	Review and Modify Procedures for Removing Safety-Related Systems from Service	R. Emrit	NRR	NOTE 3(a)		12/31/84	-
II.K.1(11)	Make All Operating and Maintenance Personnel Aware of the Seriousness and Consequences of the Erroneous Actions Leading up to, and in Early Phases of, the TMI-2 Accident	R. Emrit	NRR	NOTE 3(a)		12/31/84	-
II.K.1(12)	One Hour Notification Requirement and Continuous Communications Channels	R. Emrit	NRR	NOTE 3(a)		12/31/84	-
II.K.1(13)	Propose Technical Specification Changes Reflecting Implementation of All Bulletin Items	R. Emrit	NRR	NOTE 3(a)		12/31/84	-
II.K.1(14)	Review Operating Modes and Procedures to Deal with Significant Amounts of Hydrogen	R. Emrit	NRR	NOTE 3(a)		12/31/84	-
II.K.1(15)	For Facilities with Non-Automatic AFW Initiation, Provide Dedicated Operator in Continuous Communication with CR to Operate AFW	R. Emrit	NRR	NOTE 3(a)		12/31/84	-
II.K.1(16)	Implement Procedures That Identify PRZ PORV "Open" Indications and That Direct Operator to Close Manually at "Reset" Setpoint	R. Emrit	NRR	NOTE 3(a)		12/31/84	-
II.K.1(17)	Trip PZR Level Bistable so That PZR Low Pressure Will Initiate Safety Injection	R. Emrit	NRR	NOTE 3(a)		12/31/84	-
II.K.1(18)	Develop Procedures and Train Operators on Methods of Establishing and Maintaining Natural Circulation	R. Emrit	NRR	NOTE 3(a)		12/31/84	-
II.K.1(19)	Describe Design and Procedure Modifications to Reduce Likelihood of Automatic PZR PORV Actuation in Transients	R. Emrit	NRR	NOTE 3(a)		12/31/84	-
II.K.1(20)	Provide Procedures and Training to Operators for Prompt Manual Reactor Trip for LOFW, TT, MSIV Closure, LOOP, LOSG Level, and LO PZR Level	R. Emrit	NRR	NOTE 3(a)		12/31/84	-
II.K.1(21)	Provide Automatic Safety-Grade Anticipatory Reactor Trip for LOFW, TT, or Significant Decrease in SG Level	R. Emrit	NRR	NOTE 3(a)		12/31/84	-

Table II (Continued)

Action Plan Item/ Issue No.	Title	Priority Analyst	Lead Office/ Division/ Branch	Safety Priority Ranking	Latest Rev.	Latest Issuance Date	MPA No.
II.K.1(22)	Describe Automatic and Manual Actions for Proper Functioning of Auxiliary Heat Removal Systems When FW System Not Operable	R. Emrit	NRR	NOTE 3(a)		12/31/84	-
II.K.1(23)	Describe Uses and Types of RV Level Indication for Automatic and Manual Initiation Safety Systems	R. Emrit	NRR	NOTE 3(a)		12/31/84	-
II.K.1(24)	Perform LOCA Analyses for a Range of Small-Break Sizes and a Range of Time Lapses Between Reactor Trip and RCP Trip	R. Emrit	NRR	NOTE 3(a)		12/31/84	-
II.K.1(25)	Develop Operator Action Guidelines	R. Emrit	NRR	NOTE 3(a)		12/31/84	-
II.K.1(26)	Revise Emergency Procedures and Train ROs and SROs	R. Emrit	NRR	NOTE 3(a)		12/31/84	-
II.K.1(27)	Provide Analyses and Develop Guidelines and Procedures for Inadequate Core Cooling Conditions	R. Emrit	NRR	NOTE 3(a)		12/31/84	-
II.K.1(28)	Provide Design That Will Assure Automatic RCP Trip for All Circumstances Where Required	R. Emrit	NRR	NOTE 3(a)		12/31/84	-
II.K.2	Commission Orders on B&W Plants	-	-	-			
II.K.2(1)	Upgrade Timeliness and Reliability of AFW System	R. Emrit	NRR/DSI	NOTE 3(a)		12/31/84	-
II.K.2(2)	Procedures and Training to Initiate and Control AFW Independent of Integrated Control System	R. Emrit	NRR	NOTE 3(a)		12/31/84	-
II.K.2(3)	Hard-Wired Control-Grade Anticipatory Reactor Trips	R. Emrit	NRR/DSI	NOTE 3(a)		12/31/84	-
II.K.2(4)	Small-Break LOCA Analysis, Procedures and Operator Training	R. Emrit	NRR/DHFS/OLB	NOTE 3(a)		12/31/84	-
II.K.2(5)	Complete TMI-2 Simulator Training for All Operators	R. Emrit	NRR	NOTE 3(a)		12/31/84	-
II.K.2(6)	Reevaluate Analysis for Dual-Level Setpoint Control	R. Emrit	NRR/DSI	NOTE 3(a)		12/31/84	-
II.K.2(7)	Reevaluate Transient of September 24, 1977	R. Emrit	NRR/DSI	NOTE 3(a)		12/31/84	-
II.K.2(8)	Continued Upgrading of AFW System	R. Emrit	NRR	II.E.1.1, II.E.1.2		12/31/84	NA
II.K.2(9)	Analysis and Upgrading of Integrated Control System	R. Emrit	NRR	I		12/31/84	F-27
II.K.2(10)	Hard-Wired Safety-Grade Anticipatory Reactor Trips	R. Emrit	NRR	I		12/31/84	F-28
II.K.2(11)	Operator Training and Drilling	R. Emrit	NRR	I		12/31/84	F-29
II.K.2(12)	Transient Analysis and Procedures for Management of Small Breaks	R. Emrit	NRR	I.C.1(3)		12/31/84	NA
II.K.2(13)	Thermal-Mechanical Report on Effect of HPI on Vessel Integrity for Small-Break LOCA With No AFW	R. Emrit	NRR	I		12/31/84	F-30
II.K.2(14)	Demonstrate That Predicted Lift Frequency of PORVs and SVs Is Acceptable	R. Emrit	NRR	I		12/31/84	F-31
II.K.2(15)	Analysis of Effects of Slug Flow on Once-Through Steam Generator Tubes After Primary System Voiding	R. Emrit	NRR	I		12/31/84	-
II.K.2(16)	Impact of RCP Seal Damage Following Small-Break LOCA With Loss of Offsite Power	R. Emrit	NRR	I		12/31/84	F-32
II.K.2(17)	Analysis of Potential Voiding in RCS During Anticipated Transients	R. Emrit	NRR	I		12/31/84	F-33

Table II (Continued)

Action Plan Item/ Issue No.	Title	Priority Analyst	Lead Office/ Division/ Branch	Safety Priority Ranking	Latest Rev.	Latest Issuance Date	MPA No.
II.K.2(18)	Analysis of Loss of Feedwater and Other Anticipated Transients	R. Emrit	NRR	I.C.1(3)		12/31/84	NA
II.K.2(19)	Benchmark Analysis of Sequential AFW Flow to Once-Through Steam Generator	R. Emrit	NRR	I		12/31/84	F-34
II.K.2(20)	Analysis of Steam Response to Small-Break LOCA That Causes System Pressure to Exceed PORV Setpoint	R. Emrit	NRR	I		12/31/84	F-35
II.K.2(21)	LOFT L3-1 Predictions	R. Emrit	NRR/DSI	NOTE 3(a)		12/31/84	-
II.K.3	Final Recommendations of Bulletins and Orders Task Force	-	-	-			
II.K.3(1)	Install Automatic PORV Isolation System and Perform Operational Test	R. Emrit	NRR	I		12/31/84	F-36
II.K.3(2)	Report on Overall Safety Effect of PORV Isolation System	R. Emrit	NRR	I		12/31/84	F-37
II.K.3(3)	Report Safety and Relief Valve Failures Promptly and Challenges Annually	R. Emrit	NRR	I		12/31/84	F-38
II.K.3(4)	Review and Upgrade Reliability and Redundancy of Non-Safety Equipment for Small-Break LOCA Mitigation	R. Emrit	NRR	II.C.1, II.C.2, II.C.3		12/31/84	NA
II.K.3(5)	Automatic Trip of Reactor Coolant Pumps	R. Emrit	NRR	I		12/31/84	F-39, G-01
II.K.3(6)	Instrumentation to Verify Natural Circulation	R. Emrit	NRR/DSI	I.C.1(3), II.F.2, II.F.3		12/31/84	NA
II.K.3(7)	Evaluation of PORV Opening Probability During Overpressure Transient	R. Emrit	NRR	I		12/31/84	-
II.K.3(8)	Further Staff Consideration of Need for Diverse Decay Heat Removal Method Independent of SGs	R. Emrit	NRR/DST/GIB	II.C.1, II.E.3.3		12/31/84	NA
II.K.3(9)	Proportional Integral Derivative Controller Modification	R. Emrit	NRR	I		12/31/84	F-40
II.K.3(10)	Anticipatory Trip Modification Proposed by Some Licensees to Confine Range of Use to High Power Levels	R. Emrit	NRR	I		12/31/84	F-41
II.K.3(11)	Control Use of PORV Supplied by Control Components, Inc. Until Further Review Complete	R. Emrit	NRR	I		12/31/84	-
II.K.3(12)	Confirm Existence of Anticipatory Trip Upon Turbine Trip	R. Emrit	NRR	I		12/31/84	F-42
II.K.3(13)	Separation of HPCI and RCIC System Initiation Levels	R. Emrit	NRR	I		12/31/84	F-43
II.K.3(14)	Isolation of Isolation Condensers on High Radiation	R. Emrit	NRR	I		12/31/84	F-44
II.K.3(15)	Modify Break Detection Logic to Prevent Spurious Isolation of HPCI and RCIC Systems	R. Emrit	NRR	I		12/31/84	F-45

Table II (Continued)

Action Plan Item/ Issue No.	Title	Priority Analyst	Lead Office/ Division/ Branch	Safety Priority Ranking	Latest Rev.	Latest Issuance Date	MPA No.
II.K.3(16)	Reduction of Challenges and Failures of Relief Valves - Feasibility Study and System Modification	R. Emrit	NRR	I		12/31/84	F-46
II.K.3(17)	Report on Outage of ECC Systems - Licensee Report and Technical Specification Changes	R. Emrit	NRR	I		12/31/84	F-47
II.K.3(18)	Modification of ADS Logic - Feasibility Study and Modification for Increased Diversity for Some Event Sequences	R. Emrit	NRR	I		12/31/84	F-48
II.K.3(19)	Interlock on Recirculation Pump Loops	R. Emrit	NRR	I		12/31/84	F-49
II.K,3(20)	Loss of Service Water for Big Rock Point	R. Emrit	NRR	I		12/31/84	-
II.K.3(21)	Restart of Core Spray and LPCI Systems on Low Level - Design and Modification	R. Emrit	NRR	I		12/31/84	F-50
II.K.3(22)	Automatic Switchover of RCIC System Suction - Verify Procedures and Modify Design	R. Emrit	NRR	I		12/31/84	F-51
II.K.3(23)	Central Water Level Recording	R. Emrit	NRR	I.D.2, III.A.1.2(1), III.A.3.4		12/31/84	NA
II.K.3(24)	Confirm Adequacy of Space Cooling for HPCI and RCIC Systems	R. Emrit	NRR	I		12/31/84	F-52
II.K.3(25)	Effect of Loss of AC Power on Pump Seals	R. Emrit	NRR	I		12/31/84	F-53
II.K.3(26)	Study Effect on RHR Reliability of Its Use for Fuel Pool Cooling	R. Emrit	NRR/DSI	II.E.2.1		12/31/84	NA
II.K.3(27)	Provide Common Reference Level for Vessel Level Instrumentation	R. Emrit	NRR	I		12/31/84	F-54
II.K.3(28)	Study and Verify Qualification of Accumulators on ADS Valves	R. Emrit	NRR	I		12/31/84	F-55
II.K.3(29)	Study to Demonstrate Performance of Isolation Condensers with Non-Condensibles	R. Emrit	NRR	I		12/31/84	F-56
II.K.3(30)	Revised Small-Break LOCA Methods to Show Compliance with 10 CFR 50, Appendix K	R. Emrit	NRR	I		12/31/84	F-57
II.K.3(31)	Plant-Specific Calculations to Show Compliance with 10 CFR 50.46	R. Emrit	NRR	I		12/31/84	F-58
II.K.3(32)	Provide Experimental Verification of Two-Phase Natural Circulation Models	R. Emrit	NRR/DSI	II.E.2.2		12/31/84	NA
II.K.3(33)	Evaluate Elimination of PORV Function	R. Emrit	NRR	II.C.1		12/31/84	NA
II.K.3(34)	Relap-4 Model Development	R. Emrit	NRR/DSI	II.E.2.2		12/31/84	NA
II.K.3(35)	Evaluation of Effects of Core Flood Tank Injection on Small-Break LOCAs	R. Emrit	NRR	I.C.1(3)		12/31/84	NA
II.K.3(36)	Additional Staff Audit Calculations of B&W Small-Break LOCA Analyses	R. Emrit	NRR	I.C.1(3)		12/31/84	NA

Table II (Continued)

Action Plan Item/ Issue No.	Title	Priority Analyst	Lead Office/ Division/ Branch	Safety Priority Ranking	Latest Rev.	Latest Issuance Date	MPA No.
II.K.3(37)	Analysis of B&W Response to Isolated Small-Break LOCA	R. Emrit	NRR	I.C.1(3)		12/31/84	NA
II.K.3(38)	Analysis of Plant Response to a Small-Break LOCA in the Pressurizer Spray Line	R. Emrit	NRR	I.C.1(3)		12/31/84	NA
II.K.3(39)	Evaluation of Effects of Water Slugs in Piping Caused by HPI and CFT Flows	R. Emrit	NRR	I.C.1(3)		12/31/84	NA
II.K.3(40)	Evaluation of RCP Seal Damage and Leakage During a Small-Break LOCA	R. Emrit	NRR	II.K.2(16)		12/31/84	NA
II.K.3(41)	Submit Predictions for LOFT Test L3-6 with RCPs Running	R. Emrit	NRR	I.C.1(3)		12/31/84	NA
II.K.3(42)	Submit Requested Information on the Effects of Non-Condensible Gases	R. Emrit	NRR	I.C.1(3)		12/31/84	NA
II.K.3(43)	Evaluation of Mechanical Effects of Slug Flow on Steam Generator Tubes	R. Emrit	NRR	II.K.2(15)		12/31/84	NA
II.K.3(44)	Evaluation of Anticipated Transients with Single Failure to Verify No Significant Fuel Failure	R. Emrit	NRR	I		12/31/84	F-59
II.K.3(45)	Evaluate Depressurization with Other Than Full ADS	R. Emrit	NRR	I		12/31/84	F-60
II.K.3(46)	Response to List of Concerns from ACRS Consultant	R. Emrit	NRR	I		12/31/84	F-61
II.K.3(47)	Test Program for Small-Break LOCA Model Verification Pretest Prediction, Test Program, and Model Verification	R. Emrit	NRR	I.C.1(3), II.E.2.2		12/31/84	NA
II.K.3(48)	Assess Change in Safety Reliability as a Result of Implementing B&OTF Recommendations	R. Emrit	NRR	II.C.1, II.C.2		12/31/84	NA
II.K.3(49)	Review of Procedures (NRC)	R. Emrit	NRR/DHFS/PSRB	I.C.8, I.C.9		12/31/84	NA
II.K.3(50)	Review of Procedures (NSSS Vendors)	R. Emrit	NRR/DHFS/PSRB	I.C.7, I.C.9		12/31/84	NA
II.K.3(51)	Symptom-Based Emergency Procedures	R. Emrit	NRR/DHFS/PSRB	I.C.9		12/31/84	NA
II.K.3(52)	Operator Awareness of Revised Emergency Procedures	R. Emrit	NRR	I.B.1.1, I.C.2, I.C.5		12/31/84	NA
II.K.3(53)	Two Operators in Control Room	R. Emrit	NRR	I.A.1.3		12/31/84	NA
II.K.3(54)	Simulator Upgrade for Small-Break LOCAs	R. Emrit	NRR	I.A.4.1(2)		12/31/84	NA
II.K.3(55)	Operator Monitoring of Control Board	R. Emrit	NRR	I.C.1(3), I.D.2, I.D.3		12/31/84	NA
II.K.3(56)	Simulator Training Requirements	R. Emrit	NRR/DHFS/OLB	I.A.2.6(3), I.A.3.1		12/31/84	NA
II.K.3(57)	Identify Water Sources Prior to Manual Activation of ADS	R. Emrit	NRR	I		12/31/84	F-62

Table II (Continued)

Action Plan Item/ Issue No.	Title	Priority Analyst	Lead Office/ Division/ Branch	Safety Priority Ranking	Latest Rev.	Latest Issuance Date	MPA No.
III.A	EMERGENCY PREPAREDNESS AND RADIATION EFFECTS						
III.A.1	Improve Licensee Emergency Preparedness - Short-Term						
III.A.1.1	Upgrade Emergency Preparedness	-		-			
III.A.1.1(1)	Implement Action Plan Requirements for Promptly Improving Licensee Emergency Preparedness	-	OIE/DEPER/EPB I		2	06/30/91	
III.A.1.1(2)	Perform an Integrated Assessment of the Implementation	-	OIE/DEPER/EPB	NOTE 3(b)	2	06/30/91	NA
III.A.1.2	Upgrade Licensee Emergency Support Facilities	-	-	-	2	06/30/91	
III.A.1.2(1)	Technical Support Center	-	OIE/DEPER/EPB	I	2	06/30/91	F-63
III.A.1.2(2)	On-Site Operational Support Center	-	OIE/DEPER/EPB I		2	06/30/91	F-64
III.A.1.2(3)	Near-Site Emergency Operations Facility	-	OIE/DEPER/EPB I		2	06/30/91	F-65
III.A.1.3	Maintain Supplies of Thyroid-Blocking Agent	-	-	-	2	06/30/91	
III.A.1.3(1)	Workers	R. Riggs	OIE/DEPER/EPB	NOTE 3(b)	2	06/30/91	NA
III.A.1.3(2)	Public	R. Riggs	OIE/DEPER/EPB	NOTE 3(b)	2	06/30/91	NA
III.A.2	Improving Licensee Emergency Preparedness - Long-Term						
III.A.2.1	Amend 10 CFR 50 and 10 CFR 50, Appendix E	-	-	-			
III.A.2.1(1)	Publish Proposed Amendments to the Rules	-	RES	NOTE 3(a)		12/31/94	NA
III.A.2.1(2)	Conduct Public Regional Meetings	-	RES	NOTE 3(b)		12/31/94	NA
III.A.2.1(3)	Prepare Final Commission Paper Recommending Adoption of Rules	-	RES	NOTE 3(b)		12/31/94	NA
III.A.2.1(4)	Revise Inspection Program to Cover Upgraded Requirements	-	OIE	I			F-67
III.A.2.2	Development of Guidance and Criteria	-	NRR/DL	I			F-68
III.A.3	Improving NRC Emergency Preparedness						
III.A.3.1	NRC Role in Responding to Nuclear Emergencies	-	-	-			
III.A.3.1(1)	Define NRC Role in Emergency Situations	R. Riggs	OIE/DEPER/IRDB	NOTE 3(b)	1	06/30/85	NA
III.A.3.1(2)	Revise and Upgrade Plans and Procedures for the NRC Emergency Operations Center	R. Riggs	OIE/DEPER/IRDB	NOTE 3(b)	1	06/30/85	NA
III.A.3.1(3)	Revise Manual Chapter 0502, Other Agency Procedures, and NUREG-0610	R. Riggs	OIE/DEPER/IRDB	NOTE 3(b)	1	06/30/85	NA
III.A.3.1(4)	Prepare Commission Paper	R. Riggs	OIE/DEPER/IRDB	NOTE 3(b)	1	06/30/85	NA
III.A.3.1(5)	Revise Implementing Procedures and Instructions for Regional Offices	R. Riggs	OIE/DEPER/IRDB	NOTE 3(b)	1	06/30/85	NA
III.A.3.2	Improve Operations Centers	R. Riggs	OIE/DEPER/IRDB	NOTE 3(b)	1	06/30/85	NA
III.A.3.3	Communications	-	-	-			
III.A.3.3(1)	Install Direct Dedicated Telephone Lines	J. Pittman	OIE/DEPER/IRDB	NOTE 3(a)	1	06/30/85	NA
III.A.3.3(2)	Obtain Dedicated, Short-Range Radio Communication Systems	J. Pittman	OIE/DEPER/IRDB	NOTE 3(a)	1	06/30/85	NA

Table II (Continued)

Action Plan Item/ Issue No.	Title	Priority Analyst	Lead Office/ Division/ Branch	Safety Priority Ranking	Latest Rev.	Latest Issuance Date	MPA No.
III.A.3.4	Nuclear Data Link	D. Thatcher	OIE/DEPER/IRDB	NOTE 3(b)	1	06/30/85	
III.A.3.5	Training, Drills, and Tests	J. Pittman	OIE/DEPER/IRDB	NOTE 3(b)	1	06/30/85	NA
III.A.3.6	Interaction of NRC and Other Agencies	-	-	-			
III.A.3.6(1)	International	J. Pittman	OIE/DEPER/EPLB	NOTE 3(b)	1	06/30/85	NA
III.A.3.6(2)	Federal	J. Pittman	OIE/DEPER/EPLB	NOTE 3(b)	1	06/30/85	NA
III.A.3.6(3)	State and Local	J. Pittman	OIE/DEPER/EPLB	NOTE 3(b)	1	06/30/85	NA
III.B	EMERGENCY PREPAREDNESS OF STATE AND LOCAL GOVERNMENTS						
III.B.1	Transfer of Responsibilities to FEMA	W. Milstead	OIE/DEPER/IRDB	NOTE 3(b)		11/30/83	NA
III.B.2	Implementation of NRC and FEMA Responsibilities	-	-	-			
III.B.2(1)	The Licensing Process	W. Milstead	OIE/DEPER/IRDB	NOTE 3(b)		11/30/83	NA
III.B.2(2)	Federal Guidance	W. Milstead	OIE/DEPER/IRDB	NOTE 3(b)		11/30/83	NA
III.C	PUBLIC INFORMATION						
III.C.1	Have Information Available for the News Media and the Public	-	-	-			
III.C.1(1)	Review Publicly Available Documents	J. Pittman	PA	LI (NOTE 3)		11/30/83	NA
III.C.1(2)	Recommend Publication of Additional Information	J. Pittman	PA	LI (NOTE 3)		11/30/83	NA
III.C.1(3)	Program of Seminars for News Media Personnel	J. Pittman	PA	LI (NOTE 3)		11/30/83	NA
III.C.2	Develop Policy and Provide Training for Interfacing With the News Media	-	-	-			
III.C.2(1)	Develop Policy and Procedures for Dealing With Briefing Requests	J. Pittman	PA	LI (NOTE 3)		11/30/83	NA
III.C.2(2)	Provide Training for Members of the Technical Staff	J. Pittman	PA	LI (NOTE 3)		11/30/83	NA
III.D	RADIATION PROTECTION						
III.D.1	Radiation Source Control						
III.D.1.1	Primary Coolant Sources Outside the Containment Structure	-	-	-			
III.D.1.1(1)	Review Information Submitted by Licensees Pertaining to Reducing Leakage from Operating Systems	-	NRR	I	1	12/31/88	
III.D.1.1(2)	Review Information on Provisions for Leak Detection	R. Emrit	RES/DRA/ARGIB	DROP	1	12/31/88	
III.D.1.1(3)	Develop Proposed System Acceptance Criteria	R. Emrit	RES/DRA/ARGIB	DROP	1	12/31/88	
III.D.1.2	Radioactive Gas Management	R. Emrit	NRR/DSI/METB	DROP	1	12/31/88	NA
III.D.1.3	Ventilation System and Radioiodine Adsorber Criteria	-	-	-			
III.D.1.3(1)	Decide Whether Licensees Should Perform Studies and Make Modifications	R. Emrit	NRR/DSI/METB	DROP	1	12/31/88	NA

Table II (Continued)

Action Plan Item/ Issue No.	Title	Priority Analyst	Lead Office/ Division/ Branch	Safety Priority Ranking	Latest Rev.	Latest Issuance Date	MPA No.
III.D.1.3(2)	Review and Revise SRP	R. Emrit	NRR/DSI/METB	DROP	1	12/31/88	NA
III.D.1.3(3)	Require Licensees to Upgrade Filtration Systems	R. Emrit	NRR/DSI/METB	DROP	1	12/31/88	NA
III.D.1.3(4)	Sponsor Studies to Evaluate Charcoal Adsorber	R. Emrit	NRR/DSI/METB	NOTE 3(b)	1	12/31/88	NA
III.D.1.4	Radwaste System Design Features to Aid in Accident Recovery and Decontamination	R. Emrit	NRR/DSI/METB	DROP	1	12/31/88	NA
III.D.2	Public Radiation Protection Improvement						
III.D.2.1	Radiological Monitoring of Effluents	-	-	-			
III.D.2.1(1)	Evaluate the Feasibility and Perform a Value-Impact Analysis of Modifying Effluent-Monitoring Design Criteria	R. Emrit	NRR/DSI/METB	LOW	3	12/31/98	NA
III.D.2.1(2)	Study the Feasibility of Requiring the Development of Effective Means for Monitoring and Sampling Noble Gases and Radioiodine Released to the Atmosphere	R. Emrit	NRR/DSI/METB	LOW	3	12/31/98	NA
III.D.2.1(3)	Revise Regulatory Guides	R. Emrit	NRR/DSI/METB	LOW	3	12/31/98	NA
III.D.2.2	Radioiodine, Carbon-14, and Tritium Pathway Dose Analysis	-	-	-			
III.D.2.2(1)	Perform Study of Radioiodine, Carbon-14, and Tritium Behavior	R. Emrit	NRR/DSI/RAB	NOTE 3(b)	3	12/31/98	NA
III.D.2.2(2)	Evaluate Data Collected at Quad Cities	R. Emrit	NRR/DSI/RAB	III.D.2.5	3	12/31/98	NA
III.D.2.2(3)	Determine the Distribution of the Chemical Species of Radioiodine in Air-Water-Steam Mixtures	R. Emrit	NRR/DSI/RAB	III.D.2.5	3	12/31/98	NA
III.D.2.2(4)	Revise SRP and Regulatory Guides	R. Emrit	NRR/DSI/RAB	III.D.2.5	3	12/31/98	NA
III.D.2.3	Liquid Pathway Radiological Control	-	-	-			
III.D.2.3(1)	Develop Procedures to Discriminate Between Sites/Plants	R. Emrit	NRR/DE/EHEB	NOTE 3(b)	3	12/31/98	NA
III.D.2.3(2)	Discriminate Between Sites and Plants That Require Consideration of Liquid Pathway Interdiction Techniques	R. Emrit	NRR/DE/EHEB	NOTE 3(b)	3	12/31/98	NA
III.D.2.3(3)	Establish Feasible Method of Pathway Interdiction	R. Emrit	NRR/DE/EHEB	NOTE 3(b)	3	12/31/98	NA
III.D.2.3(4)	Prepare a Summary Assessment	R. Emrit	NRR/DE/EHEB	NOTE 3(b)	3	12/31/98	NA
III.D.2.4	Offsite Dose Measurements	-	-	-			
III.D.2.4(1)	Study Feasibility of Environmental Monitors	H. Vandermolen	NRR/DSI/RAB	NOTE 3(b)	3	12/31/98	NA
III.D.2.4(2)	Place 50 TLDs Around Each Site	H. Vandermolen	OIE/DRP/ORPB	LI (NOTE 3)	3	12/31/98	NA
III.D.2.5	Offsite Dose Calculation Manual	H. Vandermolen	NRR/DSI/RAB	NOTE 3(b)	3	12/31/98	NA
III.D.2.6	Independent Radiological Measurements	H. Vandermolen	OIE/DRP/ORPB	LI (NOTE 3)	3	12/31/98	NA
III.D.3	Worker Radiation Protection Improvement						
III.D.3.1	Radiation Protection Plans	H. Vandermolen	NRR/DSI/RAB	NOTE 3(b)	3	12/31/87	NA
III.D.3.2	Health Physics Improvements	-	-	-			
III.D.3.2(1)	Amend 10 CFR 20	H. Vandermolen	RES/DFO/ORPBR	LI (NOTE 3)	3	12/31/87	NA
III.D.3.2(2)	Issue a Regulatory Guide	H. Vandermolen	RES/DFO/ORPBR	LI (NOTE 3)	3	12/31/87	NA

Table II (Continued)

Action Plan Item/ Issue No.	Title	Priority Analyst	Lead Office/ Division/ Branch	Safety Priority Ranking	Latest Rev.	Latest Issuance Date	MPA No.
III.D.3.2(3)	Develop Standard Performance Criteria	H. Vandermolen	RES/DFO/ORPBR	LI (NOTE 3)	3	12/31/87	NA
III.D.3.2(4)	Develop Method for Testing and Certifying Air-Purifying Respirators	H. Vandermolen	RES/DFO/ORPBR	LI (NOTE 3)	3	12/31/87	NA
III.D.3.3	In-plant Radiation Monitoring	-	-	-			
III.D.3.3(1)	Issue Letter Requiring Improved Radiation Sampling Instrumentation	-	NRR/DL	I	2	12/31/86	F-69
III.D.3.3(2)	Set Criteria Requiring Licensees to Evaluate Need for Additional Survey Equipment	-	NRR	NOTE 3(a)	2	12/31/86	NA
III.D.3.3(3)	Issue a Rule Change Providing Acceptable Methods for Calibration of Radiation-Monitoring Instruments	-	RES	NOTE 3(a)	2	12/31/86	NA
III.D.3.3(4)	Issue a Regulatory Guide	-	RES	NOTE 3(a)	2	12/31/86	NA
III.D.3.4	Control Room Habitability	-	NRR/DL	I	2	12/31/86	F-70
III.D.3.5	Radiation Worker Exposure	-	-	-			
III.D.3.5(1)	Develop Format for Data To Be Collected by Utilities Regarding Total Radiation Exposure to Workers	H. Vandermolen	DFO/ORPBR	LI (NOTE 3)	2	12/31/86	NA
III.D.3.5(2)	Investigative Methods of Obtaining Employee Health Data by Nonlegislative Means	H. Vandermolen	DFO/ORPBR	LI (NOTE 3)	2	12/31/86	NA
III.D.3.5(3)	Revise 10 CFR 20	H. Vandermolen	DFO/ORPBR	LI (NOTE 3)	2	12/31/86	NA
IV.A	STRENGTHEN ENFORCEMENT PROCESS						
IV.A.1	Seek Legislative Authority	R. Emrit	GC	LI (NOTE 3)		11/30/83	NA
IV.A.2	Revise Enforcement Policy	R. Emrit	OIE/ES	LI (NOTE 3)		11/30/83	NA
IV.B	ISSUANCE OF INSTRUCTIONS AND INFORMATION TO LICENSEES						
IV.B.1	Revise Practices for Issuance of Instructions and Information to Licensees	R. Emrit	OIE/DEPER	LI (NOTE 3)		11/30/83	NA
IV.C	EXTEND LESSONS LEARNED TO LICENSED ACTIVITIES OTHER THAN POWER REACTORS						
IV.C.1	Extend Lessons Learned from TMI to Other NRC Programs	R. Emrit	NMSS/WM	NOTE 3(b)		11/30/83	NA
IV.D	NRC STAFF TRAINING						
IV.D.1	NRC Staff Training	R. Emrit	ADM/MDTS	LI (NOTE 3)		11/30/83	NA

Table II (Continued)

Action Plan Item/ Issue No.	Title	Priority Analyst	Lead Office/ Division/ Branch	Safety Priority Ranking	Latest Rev.	Latest Issuance Date	MPA No.
IV.E	SAFETY DECISION-MAKING						
IV.E.1	Expand Research on Quantification of Safety Decision-Making	R. Colmar	RES/DRA/RABR	LI (NOTE 3)	2	12/31/86	NA
IV.E.2	Plan for Early Resolution of Safety Issues	R. Emrit	NRR/DST/SPEB	LI (NOTE 3)	2	12/31/86	NA
IV.E.3	Plan for Resolving Issues at the CP Stage	R. Colmar	RES/DRA/RABR	LI (NOTE 5)	2	12/31/86	NA
IV.E.4	Resolve Generic Issues by Rulemaking	R. Colmar	RES/DRA/RABR	LI (NOTE 3)	2	12/31/86	NA
IV.E.5	Assess Currently Operating Reactors	P. Matthews	NRR/DL/SEPB	NOTE 3(b)	2	12/31/86	NA
IV.F	FINANCIAL DISINCENTIVES TO SAFETY						
IV.F.1	Increased OIE Scrutiny of the Power-Ascension Test Program	D. Thatcher	OIE/DQASIP	NOTE 3(b)	1	12/31/86	NA
IV.F.2	Evaluate the Impacts of Financial Disincentives to the Safety of Nuclear Power Plants	P. Matthews	SP	NOTE 3(b)	1	12/31/86	NA
IV.G	IMPROVE SAFETY RULEMAKING PROCEDURES						
IV.G.1	Develop a Public Agenda for Rulemaking	R. Emrit	ADM/RPB	LI (NOTE 3)	1	12/31/86	NA
IV.G.2	Periodic and Systematic Reevaluation of Existing Rules	W. Milstead	RES/DRA/RABR	LI (NOTE 3)	1	12/31/86	NA
IV.G.3	Improve Rulemaking Procedures	W. Milstead	RES/DRA/RABR	LI (NOTE 3)	1	12/31/86	NA
IV.G.4	Study Alternatives for Improved Rulemaking Process	W. Milstead	RES/DRA/RABR	LI (NOTE 3)	1	12/31/86	NA
IV.H	NRC PARTICIPATION IN THE RADIATION POLICY COUNCIL						
IV.H.1	NRC Participation in the Radiation Policy Council	G. Sege	RES/DHSWM/HEBR	LI (NOTE 3)		11/30/83	NA
V.A	DEVELOPMENT OF SAFETY POLICY						
V.A.1	Develop NRC Policy Statement on Safety	R. Emrit	GC	LI (NOTE 3)		12/31/86	NA
V.B	POSSIBLE ELIMINATION OF NONSAFETY RESPONSIBILITIES						
V.B.1	Study and Recommend, as Appropriate, Elimination of Nonsafety Responsibilities	R. Emrit	GC	LI (NOTE 3)		12/31/86	NA

Table II (Continued)

Action Plan Item/ Issue No.	Title	Priority Analyst	Lead Office/ Division/ Branch	Safety Priority Ranking	Latest Rev.	Latest Issuance Date	MPA No.
V.C	ADVISORY COMMITTEES						
V.C.1	Strengthen the Role of Advisory Committee on Reactor Safeguards	R. Emrit	GC	LI (NOTE 3)		12/31/86	NA
V.C.2	Study Need for Additional Advisory Committees	R. Emrit	GC	LI (NOTE 3)		12/31/86	NA
V.C.3	Study the Need to Establish an Independent Nuclear Safety Board	R. Emrit	GC	LI (NOTE 3)		12/31/86	NA
V.D	LICENSING PROCESS						
V.D.1	Improve Public and Intervenor Participation in the Hearing Process	R. Emrit	GC	LI (NOTE 3)		12/31/86	NA
V.D.2	Study Construction-During-Adjudication Rules	R. Emrit	GC	LI (NOTE 5)		12/31/86	NA
V.D.3	Reexamine Commission Role in Adjudication	R. Emrit	GC	LI (NOTE 5)		12/31/86	NA
V.D.4	Study the Reform of the Licensing Process	R. Emrit	GC	LI (NOTE 5)		12/31/86	NA
V.E	LEGISLATIVE NEEDS						
V.E.1	Study the Need for TMI-Related Legislation	R. Emrit	GC	LI (NOTE 5)		12/31/86	NA
V.F	ORGANIZATION AND MANAGEMENT						
V.F.1	Study NRC Top Management Structure and Process	R. Emrit	GC	LI (NOTE 3)		12/31/86	NA
V.F.2	Reexamine Organization and Functions of the NRC Offices	R. Emrit	GC	LI (NOTE 3)		12/31/86	NA
V.F.3	Revise Delegations of Authority to Staff	R. Emrit	GC	LI (NOTE 3)		12/31/86	NA
V.F.4	Clarify and Strengthen the Respective Roles of Chairman, Commission, and Executive Director for Operations	R. Emrit	GC	LI (NOTE 3)		12/31/86	NA
V.F.5	Authority to Delegate Emergency Response Functions to a Single Commissioner	R. Emrit	GC	LI (NOTE 3)		12/31/86	NA
V.G	CONSOLIDATION OF NRC LOCATIONS						
V.G.1	Achieve Single Location, Long-Term	R. Emrit	GC	LI (NOTE 3)		12/31/86	NA
V.G.2	Achieve Single Location, Interim	R. Emrit	GC	LI (NOTE 3)		12/31/86	NA
	TASK ACTION PLAN ITEMS						
A-1	Water Hammer (former USI)	R. Emrit	NRR/DST/GIB	NOTE 3(a)	1	06/30/85	NA
A-2	Asymmetric Blowdown Loads on Reactor Primary Coolant Systems (former USI)	R. Emrit	NRR/DST/GIB	NOTE 3(a)	1	06/30/85	D-10

Table II (Continued)

Action Plan Item/ Issue No.	Title	Priority Analyst	Lead Office/ Division/ Branch	Safety Priority Ranking	Latest Rev.	Latest Issuance Date	MPA No.
A-3	Westinghouse Steam Generator Tube Integrity (former USI)	R. Emrit	NRR/DEST/EMTB	NOTE 3(a)	1	12/31/88	
A-4	CE Steam Generator Tube Integrity (former USI)	R. Emrit	NRR/DEST/EMTB	NOTE 3(a)	1	12/31/88	
A-5	B&W Steam Generator Tube Integrity (former USI)	R. Emrit	NRR/DEST/EMTB	NOTE 3(a)	1	12/31/88	
A-6	Mark I Short-Term Program (former USI)	R. Emrit	NRR/DST/GIB	NOTE 3(a)	1	06/30/85	
A-7	Mark I Long-Term Program (former USI)	R. Emrit	NRR/DST/GIB	NOTE 3(a)	1	06/30/85	D-01
A-8	Mark II Containment Pool Dyanmic Loads Long-Term Program (former USI)	R. Emrit	NRR/DST/GIB	NOTE 3(a)	1	06/30/85	NA
A-9	ATWS (former USI)	R. Emrit	NRR/DST/GIB	NOTE 3(a)	1	06/30/85	
A-10	BWR Feedwater Nozzle Cracking (former USI)	R. Emrit	NRR/DST/GIB	NOTE 3(a)	1	06/30/85	B-25
A-11	Reactor Vessel Materials Toughness (former USI)	R. Emrit	NRR/DST/GIB	NOTE 3(a)	1	06/30/85	
A-12	Fracture Toughness of Steam Generator and Reactor Coolant Pump Supports (former USI)	R. Emrit	NRR/DST/GIB	NOTE 3(a)	1	06/30/85	NA
A-13	Snubber Operability Assurance	R. Emrit	NRR/DE/MEB	NOTE 3(a)	1	06/30/91	B-17, B-22
A-14	Flaw Detection	P. Matthews	NRR/DE/MTEB	DROP		11/30/83	NA
A-15	Primary Coolant System Decontamination and Steam Generator Chemical Cleaning	J. Pittman	NRR/DE/CHEB	NOTE 3(b)		11/30/83	NA
A-16	Steam Effects on BWR Core Spray Distribution	R. Emrit	NRR/DSI/CPB	NOTE 3(a)		11/30/83	D-12
A-17	Systems Interactions in Nuclear Power Plants (former (USI)	R. Emrit	RES/DSIR/EIB	NOTE 3(b)	1	12/31/89	NA
A-18	Pipe Rupture Design Criteria	R. Emrit	NRR/DE/MEB	DROP		11/30/83	NA
A-19	Digital Computer Protection System	W. Milstead	RES/DSR/HFB	LI (NOTE 5)	1	06/30/91	NA
A-20	Impacts of the Coal Fuel Cycle	-	NRR/DE/EHEB	LI (NOTE 5)		11/30/83	NA
A-21	Main Steamline Break Inside Containment - Evaluation of Environmental Conditions for Equipment Qualification	H. Vandermolen	NRR/DSI/CSB	DROP	1	12/31/98	NA
A-22	PWR Main Steamline Break - Core, Reactor Vessel and Containment Building Response	V'Molen	NRR/DSI/CSB	DROP		11/30/83	NA
A-23	Containment Leak Testing	P. Matthews	NRR/DSI/CSB	RI (NOTE 5)		11/30/83	
A-24	Qualification of Class 1E Safety-Related Equipment (former USI)	R. Emrit	NRR/DST/GIB	NOTE 3(a)	1	06/30/85	B-60
A-25	Non-Safety Loads on Class 1E Power Sources	D. Thatcher	NRR/DSI/PSB	NOTE 3(a)		11/30/83	
A-26	Reactor Vessel Pressure Transient Protection (former (USI)	R. Emrit	NRR/DST/GIB	NOTE 3(a)	1	06/30/85	B-04
A-27	Reload Applications	-	NRR/DSI/CPB	LI (NOTE 5)		11/30/83	NA
A-28	Increase in Spent Fuel Pool Storage Capacity	R. Colmar	NRR/DE/SGEB	NOTE 3(a)		11/30/83	
A-29	Nuclear Power Plant Design for the Reduction of Vulnerability to Industrial Sabotage	R. Colmar	RES/DRPS/RPSI	NOTE 3(b)	1	12/31/89	NA
A-30	Adequacy of Safety-Related DC Power Supplies	G. Sege	NRR/DSI/PSB	128	1	12/31/86	NA
A-31	RHR Shutdown Requirements (former USI)	R. Emrit	NRR/DST/GIB	NOTE 3(a)	1	06/30/85	
A-32	Missile Effects	J. Pittman	NRR/DE/MTEB	A-37, A-38, B-68		11/30/83	NA

Table II (Continued)

Action Plan Item/ Issue No.	Title	Priority Analyst	Lead Office/ Division/ Branch	Safety Priority Ranking	Latest Rev.	Latest Issuance Date	MPA No.
A-33	NEPA Review of Accident Risks	-	NRR/DSI/AEB	EI(NOTE 3)		11/30/83	NA
A-34	Instruments for Monitoring Radiation and Process Variables During Accidents	V'Molen	NRR/DSI/ICSB	II.F.3		11/30/83	NA
A-35	Adequacy of Offsite Power Systems	R. Emrit	NRR/DSI/PSB	NOTE 3(a)	1	12/31/94	B-23
A-36	Control of Heavy Loads Near Spent Fuel (former USI)	R. Emrit	NRR/DSI/GIB	NOTE 3(a)	2	06/30/04	C-10, C-15
A-37	Turbine Missiles	J. Pittman	NRR/DE/MTEB	DROP		11/30/83	NA
A-38	Tornado Missiles	G. Sege	NRR/DSI/ASB	DROP	3	06/30/00	NA
A-39	Determination of Safety Relief Valve Pool Dynamic Loads and Temperature Limits (former USI)	R. Emrit	NRR/DST/GIB	NOTE 3(a)	1	06/30/85	
A-40	Seismic Design Criteria (former USI)	R. Emrit	RES/DSIR/EIB	NOTE 3(a)	1	12/31/89	NA
A-41	Long-Term Seismic Program	L. Riani	NRR/DE/MEB	NOTE 3(b)	1	12/31/84	NA
A-42	Pipe Cracks in Boiling Water Reactors (former USI)	R. Emrit	NRR/DST/GIB	NOTE 3(a)	1	06/30/85	B-05
A-43	Containment Emergency Sump Performance (former USI)	R. Emrit	NRR/DST/GIB	NOTE 3(a)	1	12/31/87	
A-44	Station Blackout (former USI)	R. Emrit	RES/DRPS/RPSI	NOTE 3(a)	1	06/30/88	
A-45	Shutdown Decay Heat Removal Requirements (former USI)	R. Emrit	RES/DRPS/RPSI	NOTE 3(b)	1	12/31/88	NA
A-46	Seismic Qualification of Equipment in Operating Plants (former USI)	R. Emrit	NRR/DSRO/EIB	NOTE 3(a)	2	06/30/00	
A-47	Safety Implications of Control Systems (former USI)	R. Emrit	RES/DSIR/EIB	NOTE 3(a)	1	12/31/89	
A-48	Hydrogen Control Measures and Effects of Hydrogen Burns on Safety Equipment	R. Emrit	NRR/DSIR/SAIB	NOTE 3(a)	1	06/30/89	
A-49	Pressurized Thermal Shock (former USI)	R. Emrit	NRR/DSRO/RSIB	NOTE 3(a)	1	12/31/87	A-21
B-1	Environmental Technical Specifications	-	NRR/DE/EHEB	EI (NOTE 3)		11/30/83	NA
B-2	Forecasting Electricity Demand	-	NRR	EI (NOTE 3)		11/30/83	NA
B-3	Event Categorization	-	NRR/DSI/RSB	LI (NOTE 3)		11/30/83	NA
B-4	ECCS Reliability	R. Emrit	NRR/DSI/RSB	II.E.3.2		11/30/83	NA
B-5	Ductility of Two-Way Slabs and Shells and Buckling Behavior of Steel Containments	D. Thatcher	RES/DE/EIB	NOTE 3(b)	1	06/30/88	NA
B-6	Loads, Load Combinations, Stress Limits	J. Pittman	NRR/DSRO/EIB	119.1		12/31/87	NA
B-7	Secondary Accident Consequence Modeling	-	NRR/DSI/AEB	LI (NOTE 3)		11/30/83	NA
B-8	Locking Out of ECCS Power Operated Valves	R. Riggs	NRR/DSI/RSB	DROP	1	12/31/94	NA
B-9	Electrical Cable Penetrations of Containment	R. Emrit	NRR/DSI/PSB	NOTE 3(b)		11/30/83	NA
B-10	Behavior of BWR Mark III Containments	H. Vandermolen	NRR/DSI/CSB	NOTE 3(a)	1	12/31/84	NA
B-11	Subcompartment Standard Problems	-	NRR/DSI/CSB	LI (NOTE 5)		11/30/83	NA
B-12	Containment Cooling Requirements (Non-LOCA)	R. Emrit	NRR/DSI/CSB	NOTE 3(b)	1	12/31/86	NA
B-13	Marviken Test Data Evaluation	-	NRR/DSI/CSB	LI (NOTE 5)		11/30/83	NA
B-14	Study of Hydrogen Mixing Capability in Containment Post-LOCA	R. Emrit	NRR/DST/GIB	A-48		11/30/83	NA
B-15	CONTEMPT Computer Code Maintenance	-	NRR/DSI/CSB	LI (NOTE 3)		11/30/83	NA
B-16	Protection Against Postulated Piping Failures in Fluid Systems Outside Containment	R. Emrit	NRR/DE/MEB	A-18		11/30/83	NA

Table II (Continued)

Action Plan Item/ Issue No.	Title	Priority Analyst	Lead Office/ Division/ Branch	Safety Priority Ranking	Latest Rev.	Latest Issuance Date	MPA No.
B-17	Criteria for Safety-Related Operator Actions	W. Milstead	RES/DST/CIHFB	NOTE 3(b)	3	06/30/00	
B-18	Vortex Suppression Requirements for Containment Sumps	R. Emrit	NRR/DST/GIB	A-43		11/30/83	NA
B-19	Thermal-Hydraulic Stability	L. Riani	NRR/DSI/CPB	NOTE 3(b)		06/30/85	NA
B-20	Standard Problem Analysis	-	RES/DAE/AMBR	LI (NOTE 5)		11/30/83	
B-21	Core Physics	-	NRR/DSI/CPB	LI (NOTE 3)		11/30/83	NA
B-22	LWR Fuel	R. Emrit	RES/DSIR/RPSIB	DROP	2	06/30/95	NA
B-23	LMFBR Fuel	-	NRR/DSI/CPB	LI (NOTE 3)		11/30/83	NA
B-24	Seismic Qualification of Electrical and Mechanical Equipment	R. Emrit	NRR	A-46		11/30/83	NA
B-25	Piping Benchmark Problems	-	NRR/DE/MEB	LI (NOTE 5)		11/30/83	
B-26	Structural Integrity of Containment Penetrations	R. Riggs	NRR/DE/MTEB	NOTE 3(b)	1	12/31/84	NA
B-27	Implementation and Use of Subsection NF	-	NRR/DE/MEB	LI (NOTE 5)		11/30/83	
B-28	Radionuclide/Sediment Transport Program	-	NRR/DE/EHEB	EI (NOTE 3)		11/30/83	NA
B-29	Effectiveness of Ultimate Heat Sinks	J. Pittman	NRR/DE/EHEB	LI (NOTE 3)	1	06/30/91	NA
B-30	Design Basis Floods and Probability	-	NRR/DE/EHEB	LI (NOTE 5)		11/30/83	
B-31	Dam Failure Model	W. Milstead	NRR/DE/SGEB	LI (NOTE 3)	1	06/30/89	NA
B-32	Ice Effects on Safety-Related Water Supplies	J. Pittman	NRR/DE/EHEB	153	1	06/30/91	NA
B-33	Dose Assessment Methodology	-	NRR/DSI/RAB	LI (NOTE 3)		11/30/83	NA
B-34	Occupational Radiation Exposure Reduction	R. Emrit	NRR/DSI/RAB	III.D.3.1		11/30/83	NA
B-35	Confirmation of Appendix I Models for Calculations of Releases of Radioactive Materials in Gaseous and Liquid Effluents from Light Water Cooled Power Reactors	-	NRR/DSI/METB	LI (NOTE 5)		11/30/83	
B-36	Develop Design, Testing, and Maintenance Criteria for Atmosphere Cleanup System Air Filtration and Adsorption Units for Engineered Safety Feature Systems and for Normal Ventilation Systems	R. Emrit	NRR/DSI/METB	NOTE 3(a)		11/30/83	
B-37	Chemical Discharges to Receiving Waters	-	NRR/DE/EHEB	EI (NOTE 5)		11/30/83	
B-38	Reconnaissance Level Investigations	-	NRR/DE/EHEB	EI (NOTE 3)		11/30/83	NA
B-39	Transmission Lines	-	NRR/DE/EHEB	EI (NOTE 3)		11/30/83	NA
B-40	Effects of Power Plant Entrainment on Plankton	-	NRR/DE/EHEB	EI (NOTE 3)		11/30/83	NA
B-41	Impacts on Fisheries	-	NRR/DE/EHEB	EI (NOTE 3)		11/30/83	NA
B-42	Socioeconomic Environmental Impacts	-	NRR/DE/SAB	EI (NOTE 3)		11/30/83	NA
B-43	Value of Aerial Photographs for Site Evaluation	-	NRR/DE/EHEB	EI (NOTE 5)		11/30/83	
B-44	Forecasts of Generating Costs of Coal and Nuclear Plants	-	NRR/DE/SAB	EI (NOTE 3)		11/30/83	NA
B-45	Need for Power - Energy Conservation	-	NRR/DE/SAB	EI (NOTE 3)		11/30/83	NA
B-46	Cost of Alternatives in Environmental Design	-	NRR/DE/SAB	EI (NOTE 3)		11/30/83	NA
B-47	Inservice Inspection of Supports-Classes 1, 2, 3, and MC Components	L. Riani	NRR/DE/MTEB	DROP		11/30/83	NA
B-48	BWR Control Rod Drive Mechanical Failures	R. Emrit	NRR/DE/MTEB	NOTE 3(b)		11/30/83	
B-49	Inservice Inspection Criteria and Corrosion Prevention Criteria for Containments	-	NRR	LI (NOTE 5)		11/30/83	

Table II (Continued)

Action Plan Item/ Issue No.	Title	Priority Analyst	Lead Office/ Division/ Branch	Safety Priority Ranking	Latest Rev.	Latest Issuance Date	MPA No.
B-50	Post-Operating Basis Earthquake Inspection	L. Riani	NRR/DE/SGEB	RI (NOTE 3)	1	06/30/85	NA
B-51	Assessment of Inelastic Analysis Techniques for Equipment and Components	R. Emrit	NRR/DE/MEB	A-40		11/30/83	NA
B-52	Fuel Assembly Seismic and LOCA Responses	R. Emrit	NRR/DST/GIB	A-2		11/30/83	NA
B-53	Load Break Switch	G. Sege	NRR/DSI/PSB	RI (NOTE 3)		11/30/83	
B-54	Ice Condenser Containments	W. Milstead	NRR/DSI/CSB	NOTE 3(b)	1	12/31/84	NA
B-55	Improved Reliability of Target Rock Safety Relief Valves	H. Vandermolen	NRR/DE/EMEB	NOTE 3(b)	1	06/30/00	
B-56	Diesel Reliability	W. Milstead	RES/DRPS/RPSI	NOTE 3(a)	2	06/30/95	D-19
B-57	Station Blackout	R. Emrit	NRR/DST/GIB	A-44		11/30/83	
B-58	Passive Mechanical Failures	L. Riani	NRR/DE/EQB	NOTE 3(b)	1	12/31/85	NA
B-59	(N-1) Loop Operation in BWRs and PWRs	L. Riani	NRR/DSI/RSB	RI (NOTE 3)	1	06/30/85	E-04,E-05
B-60	Loose Parts Monitoring Systems	R. Emrit	NRR/DSI/CPB	NOTE 3(b)	1	12/31/84	NA
B-61	Allowable ECCS Equipment Outage Periods	J. Pittman	RES/DST/PRAB	NOTE 3(b)	1	06/30/00	
B-62	Reexamination of Technical Bases for Establishing SLs, LSSSs, and Reactor Protection System Trip Functions	-	NRR/DSI/CPB	LI (NOTE 3)		11/30/83	NA
B-63	Isolation of Low Pressure Systems Connected to the Reactor Coolant Pressure Boundary	R. Emrit	NRR/DE/MEB	NOTE 3(a)		11/30/83	B-45
B-64	Decommissioning of Reactors	L. Riani	RES/DE/MEB	NOTE 3(a)	2	06/30/95	NA
B-65	Iodine Spiking	W. Milstead	NRR/DSI/AEB	DROP	2	12/31/84	NA
B-66	Control Room Infiltration Measurements	P. Matthews	NRR/DSI/AEB	NOTE 3(a)		11/30/83	
B-67	Effluent and Process Monitoring Instrumentation	L. Riani	NRR/DSI/METB	III.D.2.1		11/30/83	NA
B-68	Pump Overspeed During LOCA	L. Riani	NRR/DSI/ASB	DROP		11/30/83	NA
B-69	ECCS Leakage Ex-Containment	L. Riani	NRR/DSI/METB	III.D.1.1(1)		11/30/83	NA
B-70	Power Grid Frequency Degradation and Effect on Primary Coolant Pumps	R. Emrit	NRR/DSI/PSB	NOTE 3(b)		11/30/83	
B-71	Incident Response	L. Riani	NRR	III.A.3.1		11/30/83	NA
B-72	Health Effects and Life Shortening from Uranium and Coal Fuel Cycles		NRR/DSI/RAB	LI (NOTE 5)		11/30/83	NA
B-73	Monitoring for Excessive Vibration Inside the Reactor Pressure Vessel	D. Thatcher	NRR/DE/MEB	C-12		11/30/83	NA
C-1	Assurance of Continuous Long Term Capability of Hermetic Seals on Instrumentation and Electrical Equipment	W. Milstead	NRR/DE/EQB	NOTE 3(a)		11/30/83	
C-2	Study of Containment Depressurization by Inadvertent Spray Operation to Determine Adequacy of Containment External Design Pressure	R. Emrit	NRR/DSI/CSB	NOTE 3(b)		11/30/83	NA
C-3	Insulation Usage Within Containment	R. Emrit	NRR/DST/GIB	A-43	1	06/30/91	NA
C-4	Statistical Methods for ECCS Analysis	R. Riggs	NRR/DSRO/SPEB	RI (NOTE 3)	1	06/30/86	NA
C-5	Decay Heat Update	R. Riggs	NRR/DSRO/SPEB	RI (NOTE 3)	1	06/30/86	NA
C-6	LOCA Heat Sources	R. Riggs	NRR/DSRO/SPEB	RI (NOTE 3)	1	06/30/86	NA
C-7	PWR System Piping	R. Emrit	NRR/DE/MTEB	NOTE 3(b)		11/30/83	NA

Table II (Continued)

Action Plan Item/ Issue No.	Title	Priority Analyst	Lead Office/ Division/ Branch	Safety Priority Ranking	Latest Rev.	Latest Issuance Date	MPA No.
C-8	Main Steam Line Leakage Control Systems	W. Milstead	RES/DRPS/RPSI	NOTE 3(b)	1	06/30/90	NA
C-9	RHR Heat Exchanger Tube Failures	V'Molen	NRR/DSI/RSB	DROP		11/30/83	NA
C-10	Effective Operation of Containment Sprays in a LOCA	R. Emrit	NRR/DSI/AEB	NOTE 3(a)		11/30/83	NA
C-11	Assessment of Failure and Reliability of Pumps and Valves	R. Emrit	NRR/DE/MEB	NOTE 3(b)		12/31/85	NA
C-12	Primary System Vibration Assessment	D. Thatcher	NRR/DE/MEB	NOTE 3(b)		11/30/83	NA
C-13	Non-Random Failures	R. Emrit	NRR/DST/GIB	A-17	1	06/30/91	NA
C-14	Storm Surge Model for Coastal Sites	R. Emrit	NRR/DE/EHEB	LI (NOTE 3)		06/30/88	NA
C-15	NUREG Report for Liquid Tank Failure Analysis	-	NRR/DE/EHEB	LI (NOTE 3)		11/30/83	NA
C-16	Assessment of Agricultural Land in Relation to Power Plant Siting and Cooling System Selection	-	NRR/DE/EHEB	EI (NOTE 3)		11/30/83	NA
C-17	Interim Acceptance Criteria for Solidification Agents for Radioactive Solid Wastes	R. Emrit	NRR/DSI/METB	NOTE 3(a)		11/30/83	NA
D-1	Advisability of a Seismic Scram	D. Thatcher	RES/DET/MSEB	DROP	1	12/31/98	NA
D-2	Emergency Core Cooling System Capability for Future Plants	R. Emrit	RES/DRA/ARGIB	DROP		12/31/88	NA
D-3	Control Rod Drop Accident	R. Emrit	NRR/DSI/CPB	NOTE 3(b)		11/30/83	NA
			NEW GENERIC ISSUES				
1.	Failures in Air-Monitoring, Air-Cleaning, and Ventilating Systems	R. Emrit	NRR/DSI/METB	DROP		11/30/83	NA
2.	Failure of Protective Devices on Essential Equipment	Diab	RES/DSIR/EIB	DROP	2	06/30/95	NA
3.	Set Point Drift in Instrumentation	R. Emrit	NRR/DSIR/RPSIB	NOTE 3(b)	1	06/30/86	NA
4.	End-of-Life and Maintenance Criteria	D. Thatcher	NRR/DE/EQB	NOTE 3(b)		11/30/83	NA
5.	Design Check and Audit of Balance-of-Plant Equipment	J. Pittman	NRR/DSI/ASB	I.F.1		11/30/83	NA
6	Separation of Control Rod from Its Drive and BWR High Rod Worth Events	H. Vandermolen	NRR/DSI/CPB	NOTE 3(b)	1	12/31/94	NA
7.	Failures Due to Flow-Induced Vibrations	H. Vandermolen	NRR/DSI/RSB	DROP	1	06/30/91	NA
8.	Inadvertent Actuation of Safety Injection in PWRs	L. Riani	NRR/DSI/RSB	I.C.1		11/30/83	NA
9.	Reevaluation of Reactor Coolant Pump Trip Criteria	R. Emrit	NRR/DSI/RSB	II.K.3(5)		11/30/83	NA
10.	Surveillance and Maintenance of TIP Isolation Valves and Squib Charges	R. Riggs	NRR/DSI/ICSB	DROP		11/30/83	NA
11.	Turbine Disc Cracking	J. Pittman	NRR/DE/MTEB	A-37		11/30/83	NA
12.	BWR Jet Pump Integrity	G. Sege	NRR/DE/MTEB, MEB	NOTE 3(b)	1	12/31/84	NA
13.	Small Break LOCA from Extended Overheating of Pressurizer Heaters	L. Riani	NRR/DSI/RSB	DROP		11/30/83	NA
14.	PWR Pipe Cracks	R. Emrit	NRR/DE/MTEB	NOTE 3(b)	2	12/31/94	NA
15.	Radiation Effects on Reactor Vessel Supports	R. Emrit	RES/DET/EMMEB	NOTE 3(b)	3	06/30/96	NA

Table II (Continued)

Action Plan Item/ Issue No.	Title	Priority Analyst	Lead Office/ Division/ Branch	Safety Priority Ranking	Latest Rev.	Latest Issuance Date	MPA No.
16.	BWR Main Steam Isolation Valve Leakage Control Systems	W. Milstead	NRR/DSI/ASB	C-8		11/30/83	NA
17.	Loss of Offsite Power Subsequent to a LOCA	L. Riani	NRR/DSI/PSB, ICSB	DROP		11/30/83	NA
18.	Steam Line Break with Consequential Small LOCA	R. Riggs	NRR/DSI/RSB	I.C.1		11/30/83	NA
19.	Safety Implications of Nonsafety Instrument and Control Power Supply Bus	G. Sege	NRR/DST/GIB	A-47		11/30/83	NA
20.	Effects of Electromagnetic Pulse on Nuclear Power Plants	D. Thatcher	NRR/DSI/ICSB	NOTE 3(b)	1	06/30/84	NA
21.	Vibration Qualification of Equipment	R. Riggs	NRR/DE/EIB	DROP	2	06/30/91	NA
22.	Inadvertent Boron Dilution Events	H. Vandermolen	NRR/DSI/RSB	NOTE 3(b)	2	12/31/94	NA
23.	Reactor Coolant Pump Seal Failures	R. Riggs	RES/DET/GSIB	NOTE 3(b)	1	06/30/00	NA
24.	Automatic ECCS Switchover to Recirculation	W. Milstead	RES/DET/GSIB	NOTE 3(b)	3	12/31/95	NA
25.	Automatic Air Header Dump on BWR Scram System	W. Milstead	NRR/DSI/RSB	NOTE 3(a)		11/30/83	
26.	Diesel Generator Loading Problems Related to SIS Reset on Loss of Offsite Power	R. Emrit	NRR/DSI/ASB	17		11/30/83	NA
27.	Manual vs. Automated Actions	J. Pittman	NRR/DSI/RSB	B-17		11/30/83	NA
28.	Pressurized Thermal Shock	R. Emrit	NRR/DST/GIB	A-49		11/30/83	NA
29.	Bolting Degradation or Failure in Nuclear Power Plants	H. Vandermolen	RES/DSIR/EIB	NOTE 3(b)	2	06/30/95	NA
30.	Potential Generator Missiles - Generator Rotor Retaining Rings	J. Pittman	NRR/DE/MEB	DROP	1	12/31/85	NA
31.	Natural Circulation Cooldown	R. Riggs	NRR/DSI/RSB	I.C.1		11/30/83	NA
32.	Flow Blockage in Essential Equipment Caused by Corbicula	R. Emrit	NRR/DSI/ASB	51		11/30/83	NA
33.	Correcting Atmospheric Dump Valve Opening Upon Loss of Integrated Control System Power	J. Pittman	NRR/DSI/ICSB	A-47		11/30/83	NA
34.	RCS Leak	R. Riggs	NRR/DHFS/PSRB	DROP	1	06/30/84	NA
35.	Degradation of Internal Appurtenances in LWRs	H. Vandermolen	NRR/DSI/CPB, RSB	DROP	2	12/31/98	NA
36.	Loss of Service Water	L. Riani	NRR/DSI/ASB, AEB, RSB	NOTE 3(b)	3	06/30/91	NA
37.	Steam Generator Overfill and Combined Primary and Secondary Blowdown	L. Riani	NRR/DST/GIB, NRR/DSI/RSB	A-47, I.C.1(2)	1	06/30/85	NA
38.	Potential Recirculation System Failure as a Consequence of Ingestion of Containment Paint Flakes or Other Fine Debris	R. Emrit	RES/DSIR/RPSIB	DROP	2	06/30/95	NA
39.	Potential for Unacceptable Interaction Between the CRD System and Non-Essential Control Air System	J. Pittman	NRR/DSI/ASB	25	1	06/30/95	NA
40.	Safety Concerns Associated with Pipe Breaks in the BWR Scram System	L. Riani	NRR/DSI/ASB	NOTE 3(a)	1	06/30/84	B-65
41.	BWR Scram Discharge Volume Systems	H. Vandermolen	NRR/DSI/RSB	NOTE 3(a)		11/30/83	B-58
42.	Combination Primary/Secondary System LOCA	R. Riggs	NRR/DSI/RSB	I.C.1	1	06/30/85	NA
43.	Reliability of Air Systems	W. Milstead	RES/DSIR/RPSI	NOTE 3(a)	2	12/31/88	B-107

Table II (Continued)

Action Plan Item/ Issue No.	Title	Priority Analyst	Lead Office/ Division/ Branch	Safety Priority Ranking	Latest Rev.	Latest Issuance Date	MPA No.
44.	Failure of Saltwater Cooling System	W. Milstead	NRR/DSI/ASB	43	1	12/31/88	NA
45.	Inoperability of Instrumentation Due to Extreme Cold Weather	W. Milstead	NRR/DSI/ICSB	NOTE 3(a)	2	06/30/91	
46.	Loss of 125 Volt DC Bus	G. Sege	NRR/DSI/PSB	76		11/30/83	NA
47.	Loss of Offsite Power	D. Thatcher	NRR/DSI/RSB, ASB	NOTE 3(b)		11/30/83	
48.	LCO for Class 1E Vital Instrument Buses in Operating Reactors	G. Sege	NRR/DSI/PSB	128	1	12/31/86	NA
49.	Interlocks and LCOs for Redundant Class 1E Tie-Breakers	G. Sege	NRR/DSI/PSB	128	3	06/30/91	NA
50.	Reactor Vessel Level Instrumentation in BWRs	D. Thatcher	NRR/DSI/RSB, ICSB	NOTE 3(b)	1	12/31/84	NA
51.	Proposed Requirements for Improving the Reliability of Open Cycle Service Water Systems	R. Emrit	RES/DE/EIB	NOTE 3(a)	1	12/31/89	L-913
52.	SSW Flow Blockage by Blue Mussels	R. Emrit	NRR/DSI/ASB	51		11/30/83	NA
53.	Consequences of a Postulated Flow Blockage Incident in a BWR	H. Vandermolen	NRR/DSI/CPB, RSB	DROP	1	12/31/84	NA
54.	Valve Operator-Related Events Occurring During 1978, 1979, and 1980	L. Riani	NRR/DE/MEB	II.E.6.1	1	06/30/85	NA
55.	Failure of Class 1E Safety-Related Switchgear Circuit Breakers to Close on Demand	R. Emrit	NRR/DSI/PSB	DROP	2	06/30/91	NA
56.	Abnormal Transient Operating Guidelines as Applied to a Steam Generator Overfill Event	L. Riani	NRR/DHFS/HFEB	A-47, I.D.1		11/30/83	NA
57.	Effects of Fire Protection System Actuation on Safety-Related Equipment	W. Milstead	RES/DRA/ARGIB	NOTE 3(b)	3	06/30/95	NA
58.	Inadvertent Containment Flooding	G. Sege	NRR/DSI/ASB, CSB	DROP		11/30/83	
59.	Technical Specification Requirements for Plant Shutdown when Equipment for Safe Shutdown is Degraded or Inoperable	R. Emrit	NRR/DST/TSIP	RI (NOTE 5)	1	06/30/85	NA
60.	Lamellar Tearing of Reactor Systems Structural Supports	L. Riani	NRR/DST/GIB	A-12		11/30/83	NA
61.	SRV Line Break Inside the BWR Wetwell Airspace of Mark I and II Containments	W. Milstead	NRR/DSI/CSB	NOTE 3(b)	2	12/31/86	NA
62.	Reactor Systems Bolting Applications	R. Riggs	RES/DSIR/EIB	29	1	12/31/88	NA
63.	Use of Equipment Not Classified as Essential to Safety in BWR Transient Analysis	J. Pittman	RES/DRA/ARGIB	DROP	1	06/30/90	NA
64.	Identification of Protection System Instrument Sensing Lines	D. Thatcher	NRR/DSI/ICSB	NOTE 3(b)		11/30/83	
65.	Probability of Core-Melt Due to Component Cooling Water System Failures	H. Vandermolen	NRR/DSI/ASB	23	1	12/31/86	NA
66.	Steam Generator Requirements	R. Riggs	NRR/DEST/EMTB	NOTE 3(b)	2	12/31/88	NA
67.	Steam Generator Staff Actions	-	-	-			

Table II (Continued)

Action Plan Item/ Issue No.	Title	Priority Analyst	Lead Office/ Division/ Branch	Safety Priority Ranking	Latest Rev.	Latest Issuance Date	MPA No.
67.2.1	Integrity of Steam Generator Tube Sleeves	R. Riggs	NRR/DE/MEB	135	4	06/30/94	NA
67.3.1	Steam Generator Overfill	R. Riggs	NRR/DST/GIB NRR/DSI/RSB	A-47, I.C.1	4	06/30/94	NA
67.3.2	Pressurized Thermal Shock	R. Riggs	NRR/DST/GIB	A-49	4	06/30/94	NA
67.3.3	Improved Accident Monitoring	R. Riggs	NRR/DSI/ICSB	NOTE 3(a)	4	06/30/94	A-17
67.3.4	Reactor Vessel Inventory Measurement	R. Riggs	NRR/DSI/CPB	II.F.2	4	06/30/94	NA
67.4.1	RCP Trip	R. Riggs	NRR/DSI/RSB	II.K.3(5)	4	06/30/94	G-01
67.4.2	Control Room Design Review	R. Riggs	NRR/DHFS/HFEB	I.D.1	4	06/30/94	F-08
67.4.3	Emergency Operating Procedures	R. Riggs	NRC/DHFS/PSRB	I.C.1	4	06/30/94	F-05
67.5.1	Reassessment of Radiological Consequences	R. Riggs	RES/DRPS/RPSI	LI (NOTE 3)	4	06/30/94	NA
67.5.2	Reevaluation of SGTR Design Basis	R. Riggs	RES/DRPS/RPSI	LI (67.5.1)	4	06/30/94	NA
67.5.3	Secondary System Isolation	R. Riggs	NRR/DSI/RSB	DROP	4	06/30/94	NA
67.6.0	Organizational Responses	R. Riggs	OIE/DEPER/IRDB	III.A.3	4	06/30/94	NA
67.7.0	Improved Eddy Current Tests	R. Riggs	RES/DE/EIB	135	4	06/30/94	NA
67.8.0	Denting Criteria	R. Riggs	NRR/DE/MTEB	135	4	06/30/94	NA
67.9.0	Reactor Coolant System Pressure Control	R. Riggs	NRR/DSI/GIB NRR/DSI/RSB	A-45, I.C.1 (2,3)	4	06/30/94	NA
67.10.0	Supplemental Tube Inspections	R. Riggs	NRR/DL/ORAB	LI (NOTE 5)	4	06/30/94	NA
68.	Postulated Loss of Auxiliary Feedwater System Resulting from Turbine-Driven Auxiliary Feedwater Pump Steam Supply Line Rupture	J. Pittman	NRR/DSI/ASB	124	3	06/30/91	NA
69.	Make-up Nozzle Cracking in B&W Plants	R. Colmar	NRR/DE/MEB, MTEB	NOTE 3(b)	1	12/31/84	B43
70.	PORV and Block Valve Reliability	R. Riggs	RES/DE/EIB	NOTE 3(a)	3	06/30/91	
71.	Failure of Resin Demineralizer Systems and Their Effects on Nuclear Power Plant Safety	J. Pittman	RES/DRA/ARGIB	DROP	3	06/30/01	NA
72.	Control Rod Drive Guide Tube Support Pin Failures	R. Riggs	RES	DROP	1	06/30/91	NA
73.	Detached Thermal Sleeves	R. Emrit	RES/DSIR/EIB	NOTE 3(a)	3	06/30/95	NA
74.	Reactor Coolant Activity Limits for Operating Reactors	W. Milstead	NRR/DSI/AEB	DROP	1	06/30/86	NA
75.	Generic Implications of ATWS Events at the Salem Nuclear Plant	R. Emrit	RES/DRA/ARGIB	NOTE 3(a)	1	06/30/90	B-76, B-77, B-78, B-79, B-80, B-81, B-82, B-85 B-86, B-87, B-88, B-89,

Table II (Continued)

Action Plan Item/ Issue No.	Title	Priority Analyst	Lead Office/ Division/ Branch	Safety Priority Ranking	Latest Rev.	Latest Issuance Date	MPA No.
75.	(Cont.)						B-90, B-91, B-92, B-93
76.	Instrumentation and Control Power Interactions	Zimmerman	RES/DSIR/EIB	DROP	3	06/30/95	NA
77.	Flooding of Safety Equipment Compartments by Back-flow Through Floor Drains	L. Riani	RES/DE/EIB	A-17		12/31/87	NA
78.	Monitoring of Fatigue Transient Limits for Reactor Coolant System	Rourk	RES/DET/GSIB	NOTE 3(b)	3	12/31/97	
79.	Unanalyzed Reactor Vessel Thermal Stress During Natural Convection Cooldown	L. Riani	RES/DSIR/EIB	NOTE 3(b)	3	06/30/95	NA
80.	Pipe Break Effects on Control Rod Drive Hydraulic Lines in the Drywells of BWR Mark I and II Containments	H. Vandermolen	RES/DSARE/REAHFB	NOTE 3(b)	4	06/30/06	NA
81.	Impact of Locked Doors and Barriers on Plant and Personnel Safety	Rourk	RES/DSIR/EIB	LOW	4	06/30/95	NA
82.	Beyond Design Basis Accidents in Spent Fuel Pools	H. Vandermolen	RES/DRPS/RPSI	NOTE 3(b)	3	06/30/04	NA
83.	Control Room Habitability	R. Emrit	RES/DST/AEB	NOTE 3(b)	3	06/30/03	NA
84.	CE PORVs	R. Riggs	RES/DSIR/RPSI	NOTE 3(b)	2	06/30/90	NA
85.	Reliability of Vacuum Breakers Connected to Steam Discharge Lines Inside BWR Containments	W. Milstead	NRR/DSI/CSB	DROP	2	06/30/91	NA
86.	Long Range Plan for Dealing with Stress Corrosion Cracking in BWR Piping	R. Emrit	NRR/DEST/EMTB	NOTE 3(a)	1	06/30/88	B-84
87.	Failure of HPCI Steam Line Without Isolation	J. Pittman	RES/DSIR/EIB	NOTE 3(a)	2	06/30/95	
88.	Earthquakes and Emergency Planning	R. Riggs	RES/DRA/ARGIB	NOTE 3(b)		12/31/87	NA
89.	Stiff Pipe Clamps	T.Y. Chang	RES/DSIR/EIB	LOW	2	06/30/95	NA
90.	Technical Specifications for Anticipatory Trips	H. Vandermolen	NRR/DSI/RSB, ICSB	DROP	2	12/31/98	NA
91.	Main Crankshaft Failures in Transamerica DeLaval Emergency Diesel Generators	R. Emrit	RES/DRA/ARGIB	NOTE 3(b)		12/31/87	NA
92.	Fuel Crumbling During LOCA	H. Vandermolen	NRR/DSI/RSB, CPB	DROP	1	12/31/98	NA
93.	Steam Binding of Auxiliary Feedwater Pumps	J. Pittman	RES/DRPS/RPSI	NOTE 3(a)		06/30/88	B-98
94.	Additional Low Temperature Overpressure Protection for Light Water Reactors	J. Pittman	RES/DSIR/RPSI	NOTE 3(a)		06/30/90	
95.	Loss of Effective Volume for Containment Recirculation Spray	W. Milstead	RES/DRA/ARGIB	NOTE 3(b)		06/30/90	NA
96.	RHR Suction Valve Testing	W. Milstead	RES/DRA/ARGIB	105		06/30/90	NA
97.	PWR Reactor Cavity Uncontrolled Exposures	H. Vandermolen	NRR/DSI/RAB	III.D.3.1		06/30/85	NA
98.	CRD Accumulator Check Valve Leakage	J. Pittman	NRR/DSI/ASB	DROP		06/30/85	NA
99.	RCS/RHR Suction Line Valve Interlock on PWRs	J. Pittman	RES/DRPS/RPSI	NOTE 3(a)	3	06/30/91	L-817
100.	Once-Through Steam Generator Level	J. Jackson	RES/DSIR/EIB	DROP	1	06/30/95	NA

Table II (Continued)

Action Plan Item/ Issue No.	Title	Priority Analyst	Lead Office/ Division/ Branch	Safety Priority Ranking	Latest Rev.	Latest Issuance Date	MPA No.
101.	BWR Water Level Redundancy	H. Vandermolen	RES/DE/EIB	NOTE 3(b)	1	06/30/89	NA
102.	Human Error in Events Involving Wrong Unit or Wrong Train	R. Emrit	NRR/DLPQ/LPEB	NOTE 3(b)	2	12/31/88	NA
103.	Design for Probable Maximum Precipitation	R. Emrit	RES/DE/EIB	NOTE 3(a)	1	12/31/89	NA
104.	Reduction of Boron Dilution Requirements	J. Pittman	RES/DRA/ARGIB	DROP		12/31/88	NA
105.	Interfacing Systems LOCA at LWRs	W. Milstead	RES/DE/EIB	NOTE 3(b)	4	06/30/95	NA
106.	Piping and Use of Highly Combustible Gases in Vital Areas	W. Milstead	RES/DRPS	NOTE 3(b)	2	06/30/95	NA
107.	Main Transformer Failures	W. Milstead	RES/DRA/ARGIB	DROP	3	06/30/00	NA
108.	BWR Suppression Pool Temperature Limits	L. Riani	NRR/DSI/CSB	RI (NOTE 3)		06/30/85	NA
109.	Reactor Vessel Closure Failure	R. Riggs	RES/DRA/ARGIB	DROP		06/30/90	NA
110.	Equipment Protective Devices on Engineered Safety Features	Diab	RES/DSIR/EIB	DROP	1	06/30/95	NA
111.	Stress Corrosion Cracking of Pressure Boundary Ferritic Steels in Selected Environments	R. Riggs	NRR/DE/MTEB	LI (NOTE 5)	1	06/30/91	NA
112.	Westinghouse RPS Surveillance Frequencies and Out-of-Service Times	J. Pittman	NRR/DSI/ICSB	RI (NOTE 3)		12/31/85	NA
113.	Dynamic Qualification Testing of Large Bore Hydraulic Snubbers	R. Riggs	RES/DSIR/EIB	NOTE 3(b)	2	06/30/95	NA
114.	Seismic-Induced Relay Chatter	R. Riggs	NRR/DSRO/SPEB	A-46	1	06/30/91	NA
115.	Enhancement of the Reliability of Westinghouse Solid State Protection System	W. Milstead	RES/DRPS/RPSI	NOTE 3(b)	2	06/30/00	NA
116.	Accident Management	J. Pittman	RES/DRA/ARGIB	S		06/30/91	NA
117.	Allowable Time for Diverse Simultaneous Equipment Outages	J. Pittman	RES/DRA/ARGIB	DROP		06/30/90	NA
118.	Tendon Anchorage Failure	Shaukat	RES/DSIR/EIB	NOTE 3(a)	1	06/30/95	NA
119.	Piping Review Committee Recommendations	-	-	-			
119.1	Piping Rupture Requirements and Decoupling of Seismic and LOCA Loads	R. Riggs	NRR/DE	RI (NOTE 3)	3	12/31/97	NA
119.2	Piping Damping Values	R. Riggs	NRR/DE	RI (DROP)	3	12/31/97	NA
119.3	Decoupling the OBE from the SSE	R. Riggs	NRR/DE	RI (S)	3	12/31/97	NA
119.4	BWR Piping Materials	R. Riggs	NRR/DE	RI (NOTE 5)	3	12/31/97	NA
119.5	Leak Detection Requirements	R. Riggs	NRR/DE	RI (NOTE 5)	3	12/31/97	NA
120.	On-Line Testability of Protection Systems	W. Milstead	RES/DRA/ARGIB	NOTE 3(b)	2	06/30/95	NA
121.	Hydrogen Control for Large, Dry PWR Containments	R. Emrit	RES/DSIR/SAIB	NOTE 3(b)	2	06/30/95	NA
122.	Davis-Besse Loss of All Feedwater Event of June 9, 1985: Short-Term Actions						
122.1	Potential Inability to Remove Reactor Decay Heat	-	-	-			
122.1.a	Failure of Isolation Valves in Closed Position	H. Vandermolen	NRR/DSRO/RSIB	124	4	12/31/98	NA
122.1.b	Recovery of Auxiliary Feedwater	H. Vandermolen	NRR/DSRO/RSIB	124	4	12/31/98	NA
122.1.c.	Interruption of Auxiliary Feedwater Flow	H. Vandermolen	NRR/DSRO/RSIB	124	4	12/31/98	NA

Table II (Continued)

Action Plan Item/ Issue No.	Title	Priority Analyst	Lead Office/ Division/ Branch	Safety Priority Ranking	Latest Rev.	Latest Issuance Date	MPA No.
122.2	Initiating Feed-and-Bleed	H. Vandermolen	NRR/DEST/SRXB	NOTE 3(b)	4	12/31/98	NA
122.3	Physical Security System Constraints	H. Vandermolen	NRR/DSRO/SPEB	DROP	4	12/31/98	NA
123.	Deficiencies in the Regulations Governing DBA and Single-Failure Criteria Suggested by the Davis-Besse Event of June 9, 1985	W. Milstead	RES/DSIR/SAIB	DROP	1	06/30/95	NA
124.	Auxiliary Feedwater System Reliability	R. Emrit	NRR/DEST/SRXB	NOTE 3(a)	3	06/30/91	
125.	Davis-Besse Loss of All Feedwater Event of June 9, 1985: Long-Term Actions	-	-	-			
125.I.1	Availability of the Shift Technical Advisor	H. Vandermolen	RES/DRA/ARGIB	DROP	7	12/31/98	NA
125.I.2	PORV Reliability	-	-	-	7	12/31/98	
125.I.2.a	Need for a Test Program to Establish Reliability of the PORV	H. Vandermolen	NRR/DSRO/SPEB	70	7	12/31/98	NA
125.I.2.b	Need for PORV Surveillance Tests to Confirm Operational Readiness	H. Vandermolen	NRR/DSRO/SPEB	70	7	12/31/98	NA
125.I.2.c	Need for Additional Protection Against PORV Failure	H. Vandermolen	NRR/DSRO/SPEB	DROP	7	12/31/98	NA
125.I.2.d	Capability of the PORV to Support Feed-and-Bleed	H. Vandermolen	NRR/DSRO/SPEB	A-45	7	12/31/98	NA
125.I.3	SPDS Availability	W. Milstead	RES/DRA/ARGIB	NOTE 3(b)	7	12/31/98	NA
125.I.4	Plant-Specific Simulator	R. Riggs	RES/DRA/ARGIB	DROP	7	12/31/98	NA
125.I.5	Safety Systems Tested in All Conditions Required by DBA	R. Riggs	RES/DRA/ARGIB	DROP	7	12/31/98	NA
125.I.6	Valve Torque Limit and Bypass Switch Settings	H. Vandermolen	RES/DRA/ARGIB	DROP	7	12/31/98	NA
125.I.7	Operator Training Adequacy	-	-	-			
125.I.7.a	Recover Failed Equipment	J. Pittman	RES/DRA/ARGIB	DROP	7	12/31/98	NA
125.I.7.b	Realistic Hands-On Training	H. Vandermolen	RES/DRA/ARGIB	DROP	7	12/31/98	NA
125.I.8	Procedures and Staffing for Reporting to NRC Emergency Response Center	H. Vandermolen	RES/DRA/ARGIB	DROP	7	12/31/98	NA
125.II.1	Need for Additional Actions on AFW Systems	-	-	-			
125.II.1.a	Two-Train AFW Unavailability	H. Vandermolen	NRR/DSRO/SPEB	DROP	7	12/31/98	NA
125.II.1.b	Review Existing AFW Systems for Single Failure	H. Vandermolen	NRR/DSRO/SPEB	124	7	12/31/98	NA
125.II.1.c	NUREG-0737 Reliability Improvements	H. Vandermolen	NRR/DSRO/SPEB	DROP	7	12/31/98	NA
125.II.1.d	AFW/Steam and Feedwater Rupture Control System/ICS Interactions in B&W Plants	H. Vandermolen	NRR/DSRO/SPEB	DROP	7	12/31/98	NA
125.II.2	Adequacy of Existing Maintenance Requirements for Safety-Related Systems	R. Riggs	RES/DRA/ARGIB	DROP	7	12/31/98	NA
125.II.3	Review Steam/Feedline Break Mitigation Systems for Single Failure	V'Molen	NRR/DSRO/SPEB	DROP	7	12/31/98	NA
125.II.4	Thermal Stress of OTSG Components	R. Riggs	NRR/DSRO/SPEB	DROP	7	12/31/98	NA
125.II.5	Thermal-Hydraulic Effects of Loss and Restoration of Feedwater on Primary System Components	R. Riggs	RES/DRA/ARGIB	DROP	7	12/31/98	
125.II.6	Reexamine PRA Estimates of Core Damage Risk from Loss	H. Vandermolen	RES/DRA/ARGIB	DROP	7	12/31/98	NA

Table II (Continued)

Action Plan Item/ Issue No.	Title	Priority Analyst	Lead Office/ Division/ Branch	Safety Priority Ranking	Latest Rev.	Latest Issuance Date	MPA No.
	of All Feedwater						
125.II.7	Reevaluate Provision to Automatically Isolate Feedwater from Steam Generator During a Line Break	H. Vandermolen	RES/DRPS/RPSI	NOTE 3(b)	7	12/31/98	NA
125.II.8	Reassess Criteria for Feed-and-Bleed Initiation	H. Vandermolen	RES/DRA/ARGIB	DROP	7	12/31/98	NA
125.II.9	Enhanced Feed-and-Bleed Capability	H. Vandermolen	NRR/DSRO/SPEB	DROP	7	12/31/98	NA
125.II.10	Hierarchy of Impromptu Operator Actions	R. Riggs	RES/DRA/ARGIB	DROP	7	12/31/98	NA
125.II.11	Recovery of Main Feedwater as Alternative to Auxiliary Feedwater	R. Riggs	RES/DRA/ARGIB	DROP	7	12/31/98	NA
125.II.12	Adequacy of Training Regarding PORV Operation	R. Riggs	RES/DRA/ARGIB	DROP	7	12/31/98	NA
125.II.13	Operator Job Aids	J. Pittman	NRR/DRA/ARGIB	DROP	7	12/31/98	NA
125.II.14	Remote Operation of Equipment Which Must Now Be Operated Locally	H. Vandermolen	NRR/DSRO/SPEB	DROP	7	12/31/98	NA
126.	Reliability of PWR Main Steam Safety Valves	R. Riggs	RES/DRA/ARGIB	LI (NOTE 3)		06/30/88	NA
127.	Maintenance and Testing of Manual Valves in Safety-Related Systems	J. Pittman	RES/DRA/ARGIB	LOW		12/31/87	NA
128.	Electrical Power Reliability	R. Emrit	RES/DSIR/EIB	NOTE 3(a)	2	06/30/95	
129.	Valve Interlocks to Prevent Vessel Drainage During Shutdown Cooling	W. Milstead	RES/DRA/ARGIB	DROP		06/30/90	NA
130.	Essential Service Water Pump Failures at Multiplant Sites	R. Riggs	RES/DSIR/RPSIB	NOTE 3(a)	2	12/31/95	
131.	Potential Seismic Interaction Involving the Movable In-Core Flux Mapping System Used in Westinghouse-Designed Plants	R. Riggs	RES/DRA/ARGIB	S	1	06/30/91	NA
132.	RHR System Inside Containment	Su	RES/DSIR/SAIB	DROP	1	12/31/95	NA
133.	Update Policy Statement on Nuclear Plant Staff Working Hours	J. Pittman	NRR/DLPQ/LHFB	LI (NOTE 3)	1	12/31/91	NA
134.	Rule on Degree and Experience Requirement	J. Pittman	RES/DRA/RDB	NOTE 3(b)		12/31/89	NA
135.	Steam Generator and Steam Line Overfill	R. Emrit	RES/DSIR/EIB	NOTE 3(b)	3	06/30/95	NA
136.	Storage and Use of Large Quantities of Cryogenic Combustibles On Site	W. Milstead	RES/DRA/ARGIB	LI (NOTE 3)		06/30/88	NA
137.	Refueling Cavity Seal Failure	W. Milstead	RES/DRA/ARGIB	DROP		06/30/90	NA
138.	Deinerting of BWR Mark I and II Containments During Power Operations Upon Discovery of RCS Leakage or a Train of a Safety System Inoperable	W. Milstead	RES/DSIR/SAIB	DROP	2	12/31/98	NA
139.	Thinning of Carbon Steel Piping in LWRs	R. Riggs	RES/DRA/ARGIB	RI (NOTE 3)	1	06/30/95	NA
140.	Fission Product Removal Systems	R. Riggs	RES/DRA/ARGIB	DROP		06/30/90	NA
141.	Large-Break LOCA With Consequential SGTR	R. Riggs	RES/DRA/ARGIB	DROP		06/30/90	NA
142.	Leakage Through Electrical Isolators in Instrumentation Circuits	W. Milstead	RES/DSIR/EIB	NOTE 3(b)	4	12/31/97	NA
143.	Availability of Chilled Water Systems and Room Cooling	W. Milstead	RES/DRA/ARGIB	NOTE 3(b)	2	06/30/95	NA
144.	Scram Without a Turbine/Generator Trip	Hrabal	RES/DSIR/EIB	DROP	2	12/31/98	NA

Table II (Continued)

Action Plan Item/ Issue No.	Title	Priority Analyst	Lead Office/ Division/ Branch	Safety Priority Ranking	Latest Rev.	Latest Issuance Date	MPA No.
145.	Actions to Reduce Common Cause Failures	Rasmuson	RES/DST/PRAB	NOTE 3(b)	3	06/30/00	NA
146.	Support Flexibility of Equipment and Components	Chang	RES/DSIR/EIB	NOTE 3(b)	2	06/30/95	NA
147.	Fire-Induced Alternate Shutdown/Control Room Panel Interactions	W. Milstead	RES/DSIR/SAIB	LI (NOTE 3)	1	06/30/94	NA
148.	Smoke Control and Manual Fire-Fighting Effectiveness	Basdekas	RES/DSIR/RPSIB	LI (NOTE 3)	1	06/30/00	NA
149.	Adequacy of Fire Barriers	R. Emrit	RES/DSIR/EIB	DROP	2	12/31/98	NA
150.	Overpressurization of Containment Penetrations	W. Milstead	RES/DSIR/SAIB	DROP	1	06/30/95	NA
151.	Reliability of Anticipated Transient Without SCRAM Recirculation Pump Trip in BWRs	W. Milstead	RES/DSIR/SAIB	NOTE 3(b)	2	06/30/95	NA
152.	Design Basis for Valves That Might Be Subjected to Significant Blowdown Loads	R. Emrit	RES/DSIR/EIB	DROP	3	06/30/01	NA
153.	Loss of Essential Service Water in LWRs	R. Riggs	RES/DRA/ARGIB	NOTE 3(b)	2	12/31/95	NA
154.	Adequacy of Emergency and Essential Lighting	Woods	RES/DSIR/SAIB	DROP	2	12/31/98	NA
155.	Generic Concerns Arising from TMI-2 Cleanup	-	-	-			
155.1	More Realistic Source Term Assumptions	R. Emrit	RES/DST/AEB	NOTE 3(a)	2	06/30/95	NA
155.2	Establish Licensing Requirements for Non-Operating Facilities	R. Emrit	RES/DSIR/EIB	RI (NOTE 5)	2	06/30/95	NA
155.3	Improve Design Requirements for Nuclear Facilities	R. Emrit	RES/DSIR/EIB	DROP	2	06/30/95	NA
155.4	Improve Criticality Calculations	R. Emrit	RES/DSIR/EIB	DROP	2	06/30/95	NA
155.5	More Realistic Severe Reactor Accident Scenario	R. Emrit	RES/DSIR/EIB	DROP	2	06/30/95	NA
155.6	Improve Decontamination Regulations	R. Emrit	RES/DSIR/EIB	DROP	2	06/30/95	NA
155.7	Improve Decommissioning Regulations	R. Emrit	RES/DSIR/EIB	DROP	2	06/30/95	NA
156.	Systematic Evaluation Program	-	-	-			
156.1.1	Settlement of Foundations and Buried Equipment	T.Y. Chang	RES/DSIR/EIB	DROP	7	06/30/01	NA
156.1.2	Dam Integrity and Site Flooding	J. Chen	RES/DSIR/SAIB	DROP	7	06/30/01	NA
156.1.3	Site Hydrology and Ability to Withstand Floods	J. Chen	RES/DSIR/SAIB	DROP	7	06/30/01	NA
156.1.4	Industrial Hazards	C. Ferrell	RES/DSIR/SAIB	DROP	7	06/30/01	NA
156.1.5	Tornado Missiles	J. Chen	RES/DSIR/SAIB	DROP	7	06/30/01	NA
156.1.6	Turbine Missiles	R. Emrit	RES/DSIR/EIB	DROP	7	06/30/01	NA
156.2.1	Severe Weather Effects on Structures	J. Chen	RES/DSIR/SAIB	DROP	7	06/30/01	NA
156.2.2	Design Codes, Criteria, and Load Combinations	R. Kirkwood	RES/DSIR/EIB	DROP	7	06/30/01	NA
156.2.3	Containment Design and Inspection	S. Shaukat	RES/DSIR/EIB	DROP	7	06/30/01	NA
156.2.4	Seismic Design of Structures, Systems, and Components	J. Chen	RES/DSIR/SAIB	DROP	7	06/30/01	NA
156.3.1.1	Shutdown Systems	R. Woods	RES/DSIR/SAIB	DROP	7	06/30/01	NA
156.3.1.2	Electrical Instrumentation and Controls	R. Woods	RES/DSIR/SAIB	DROP	7	06/30/01	NA
156.3.2	Service and Cooling Water Systems	N. Su	RES/DSIR/SAIB	DROP	7	06/30/01	NA
156.3.3	Ventilation Systems	G. Burdick	RES/DSIR/SAIB	DROP	7	06/30/01	NA
156.3.4	Isolation of High and Low Pressure Systems	G. Burdick	RES/DSIR/SAIB	DROP	7	06/30/01	NA
156.3.5	Automatic ECCS Switchover	W. Milstead	RES/DSIR/SAIB	24	7	06/30/01	NA
156.3.6.1	Emergency AC Power	R. Emrit	RES/DSIR/EIB	DROP	7	06/30/01	NA
156.3.6.2	Emergency DC Power	C. Rourk	RES/DSIR/EIB	DROP	7	06/30/01	NA

Table II (Continued)

Action Plan Item/ Issue No.	Title	Priority Analyst	Lead Office/ Division/ Branch	Safety Priority Ranking	Latest Rev.	Latest Issuance Date	MPA No.
156.3.8	Shared Systems	R. Emrit	RES/DSIR/EIB	DROP	7	06/30/01	NA
156.4.1	RPS and ESFS Isolation	R. Emrit	RES/DSIR/EIB	142	7	06/30/01	NA
156.4.2	Testing of the RPS and ESFS	T.Y. Chang	RES/DSIR/SAIB	120	7	06/30/01	NA
156.6.1	Pipe Break Effects on Systems and Components	J. Page	RES/DET/GSIB	HIGH	7	06/30/01	
157.	Containment Performance	J. Shaperow	RES/DSIR/SAIB	NOTE 3(b)		06/30/95	NA
158.	Performance of Power-Operated Valves Under Design Basis Conditions	C. Hrabal	RES/DET/GSIB	NOTE 3(b)	2	06/30/00	NA
159.	Qualification of Safety-Related Pumps While Running on Minimum Flow	N. Su	RES/DSIR/SAIB	DROP	1	06/30/95	NA
160.	Spurious Actions of Instrumentation Upon Restoration of Power	C. Rourk	RES/DSIR/EIB	DROP	1	06/30/95	NA
161.	Use of Non-Safety-Related Power Supplies in Safety-Related Circuits	C. Rourk	RES/DSIR/EIB	DROP	1	06/30/95	NA
162.	Inadequate Technical Specifications for Shared Systems at Multiplant Sites When One Unit Is Shut Down	U. Cheh	RES/DSIR/SAIB	DROP	1	06/30/95	NA
163.	Multiple Steam Generator Tube Leakage	Coffman	RES/DET/GSIB	HIGH		12/31/97	
164.	Neutron Fluence in Reactor Vessel	R. Emrit	RES/DSIR/EIB	DROP	1	06/30/95	NA
165.	Safety and Safety/Relief Valve Reliability	C. Hrabal	RES/DET/GSIB	NOTE 3(b)	2	06/30/00	NA
166.	Adequacy of Fatigue Life of Metal Components	R. Emrit	NRR/DE/EMEB	NOTE 3(b)	2	12/31/97	NA
167.	Hydrogen Storage Facility Separation	G. Burdick	RES/DSIR/SAIB	LOW	1	06/30/95	NA
168.	Environmental Qualification of Electrical Equipment	R. Emrit	NRR/DSSA/SPLB	NOTE 3(b)	3	06/30/04	NA
169.	BWR MSIV Common Mode Failure Due to Loss of Accumulator Pressure	R. Emrit	RES/DET/GSIB	DROP	1	06/30/00	NA
170.	Fuel Damage Criteria for High Burnup Fuel	R. Emrit	RES/DET/GSIB	NOTE 3(b)	2	06/30/01	NA
171.	ESF Failure from LOOP Subsequent to a LOCA	C. Rourk	RES/DET/GSIB	NOTE 3(b)	1	12/31/98	NA
172.	Multiple System Responses Program	R. Emrit	RES/DET/GSIB	NOTE 3(b)	2	06/30/02	NA
173.	Spent Fuel Storage Pool	-	-				
173.A	Operating Facilities	R. Emrit	RES/DET/GSIB	NOTE 3(b)	4	06/30/02	NA
173.B	Permanently Shutdown Facilities	R. Emrit	RES/DET/GSIB	NOTE 3(b)	4	06/30/02	NA
174.	Fastener Gaging Practices	-	-				
174.A	SONGS Employees' Concern	R. Emrit	RES/DET/GSIB	NOTE 3(b)	1	06/30/00	NA
174.B	Johnson Gage Company Concern	R. Emrit	RES/DET/GSIB	NOTE 3(b)	1	06/30/00	NA
175.	Nuclear Power Plant Shift Staffing	R. Emrit	RES/DET/GSIB	NOTE 3(b)	1	06/30/00	NA
176.	Loss of Fill-Oil in Rosemount Transmitters	R. Emrit	RES/DET/GSIB	NOTE 3(b)	1	06/30/00	NA
177.	Vehicle Intrusion at TMI	R. Emrit	RES/DET/GSIB	NOTE 3(a)	1	06/30/00	NA
178.	Effect of Hurricane Andrew on Turkey Point	R. Emrit	RES/DET/GSIB	LI (NOTE 3)	2	06/30/00	
179.	Core Performance	R. Emrit	RES/DET/GSIB	LI (NOTE 5)	1	06/30/00	
180.	Notice of Enforcement Discretion	R. Emrit	RES/DET/GSIB	LI (NOTE 3)	1	06/30/00	
181.	Fire Protection	R. Emrit	RES/DET/GSIB	LI (NOTE 5)	1	06/30/00	
182.	General Electric Extended Power Uprate	R. Emrit	RES/DET/GSIB	RI (NOTE 5)	1	06/30/00	

Table II (Continued)

Action Plan Item/ Issue No.	Title	Priority Analyst	Lead Office/ Division/ Branch	Safety Priority Ranking	Latest Rev.	Latest Issuance Date	MPA No.
183.	Cycle-Specific Parameter Limits in Technical Specifications	R. Emrit	RES/DET/GSIB	RI (NOTE 3)	2	06/30/00	
184.	Endangered Species	R. Emrit	RES/DET/GSIB	EI (NOTE 5)	1	06/30/00	
185.	Control of Recriticality Following Small-Break LOCA In PWRs	H. Vandermolen	RES/DSARE/REAHFB	NOTE 3(b)	1	06/30/06	NA
186.	Potential Risk and Consequences of Heavy Load Drops	R. Lloyd	RES/DSARE/REAHFB	CONTINUE		06/30/04	
187.	The Potential Impact of Postulated Cesium Concentration on Equipment Qualification in the Containment Sump in Nuclear Power Plants	H. Vandermolen	RES/DSARE/REAHFB	DROP		06/30/01	NA
188.	Steam Generator Tube Leaks/Ruptures Concurrent with Containment Bypass	H. Vandermolen	RES/DSARE/REAHFB	NOTE 3(b)	1	06/30/06	NA
189.	Susceptibility of Ice Condenser Containments to Early Failure from Hydogen Combustion During A Severe Accident	H. Vandermolen	RES/DSARE/REAHFB	CONTINUE		06/30/02	
190.	Fatigue Evaluation of Metal Components for 60-Year Plant Life	S. Shaukat	RES/DET/GSIB	NOTE 3(b)	2	06/30/00	NA
191.	Assessment of Debris Accumulation on PWR Sump Performance	M. Marshall	RES/DET/GSIB	HIGH	1	12/31/98	
192.	Secondary Containment Drawdown Time	H. Vandermolen	RES/DSARE/REAHFB	DROP		06/30/03	NA
193.	BWR ECCS Suction Concerns	H. Vandermolen	RES/DSARE/REAHFB	CONTINUE		06/30/04	
194.	Implications of Updated Probabilistic Seismic Hazard Estimates	D. Harrison	NRR/DSSA/SPSB	DROP		06/30/04	NA
195.	Hydrogen Combustion in Foreign BWR Piping	H. Vandermolen	RES/DSARE/REAHFB	DROP		06/30/04	NA
196.	Boral Degradation	H. Vandermolen	RES/DSARE/ARREB	CONTINUE		06/30/05	
197.	Iodine Spiking Phenomena	H. Vandermolen	RES/DSARE/ARREB	DROP		06/30/06	NA
198.	Hydrogen Combustion in PWR Piping	H. Vandermolen	RES/DRASP/OERA	NOTE 4		(Later)	
199.	Implications of Updated Probabilistic Seismic Hazard Estimates in Central and Eastern United States	R. Emrit	RES/DRASP/OERA	NOTE 4		(Later)	
200.	Tin Whiskers	C. Antonescu	RES/DRASP/OERA	NOTE 4		(Later)	
			HUMAN FACTORS ISSUES				
HF1	STAFFING AND QUALIFICATIONS						
HF1.1	Shift Staffing	J. Pittman	RES/DRPS/RHFB	NOTE 3(a)	2	06/30/89	
HF1.2	Engineering Expertise on Shift	J. Pittman	NRR/DHFT/HFIB	NOTE 3(b)	2	06/30/89	
HF1.3	Guidance on Limits and Conditions of Shift Work	J. Pittman	NRR/DHFT/HFIB	NOTE 3(b)	2	06/30/89	
HF2	TRAINING						
HF2.1	Evaluate Industry Training	J. Pittman	NRR/DHFT/HFIB	LI (NOTE 5)	1	12/31/86	NA

Table II (Continued)

Action Plan Item/ Issue No.	Title	Priority Analyst	Lead Office/ Division/ Branch	Safety Priority Ranking	Latest Rev.	Latest Issuance Date	MPA No.
HF2.2	Evaluate INPO Accreditation	J. Pittman	NRR/DHFT/HFIB	LI (NOTE 5)	1	12/31/86	NA
HF2.3	Revise SRP Section 13.2	J. Pittman	NRR/DHFT/HFIB	LI (NOTE 5)	1	12/31/86	NA
HF3	OPERATOR LICENSING EXAMINATIONS						
HF3.1	Develop Job Knowledge Catalog	J. Pittman	NRR/DHFT/HFIB	LI (NOTE 3)	2	12/31/87	NA
HF3.2	Develop License Examination Handbook	J. Pittman	NRR/DHFT/HFIB	LI (NOTE 3)	2	12/31/87	NA
HF3.3	Develop Criteria for Nuclear Power Plant Simulators	J. Pittman	NRR/DHFT/HFIB	I.A.4.2(4)	2	12/31/87	NA
HF3.4	Examination Requirements	J. Pittman	NRR/DHFT/HFIB	I.A.2.6(1)	2	12/31/87	NA
HF3.5	Develop Computerized Exam System	J. Pittman	NRR/DHFT/HFIB	LI (NOTE 3)	2	12/31/87	NA
HF4	PROCEDURES						
HF4.1	Inspection Procedure for Upgraded Emergency Operating Procedures	J. Pittman	NRR/DLPQ/LHFB	NOTE 3(b)	6	06/30/95	NA
HF4.2	Procedures Generation Package Effectiveness Evaluation	J. Pittman	NRR/DHFT/HFIB	LI (NOTE 5)	6	06/30/95	NA
HF4.3	Criteria for Safety-Related Operator Actions	J. Pittman	NRR/DHFT/HFIB	B-17	6	06/30/95	NA
HF4.4	Guidelines for Upgrading Other Procedures	J. Pittman	RES/DRPS/RHFB	NOTE 3(b)	6	06/30/95	NA
HF4.5	Application of Automation and Artificial Intelligence	J. Pittman	NRR/DHFT/HFIB	HF5.2	6	06/30/95	NA
HF5	MAN-MACHINE INTERFACE						
HF5.1	Local Control Stations	J. Pittman	RES/DRPS/RHFB	NOTE 3(b)	4	06/30/95	NA
HF5.2	Review Criteria for Human Factors Aspects of Advanced Controls and Instrumentation	J. Pittman	RES/DRPS/RHFB	NOTE 3(b)	4	06/30/95	NA
HF5.3	Evaluation of Operational Aid Systems	J. Pittman	NRR/DHFT/HFIB	HF5.2	4	06/30/95	NA
HF5.4	Computers and Computer Displays	J. Pittman	NRR/DHFT/HFIB	HF5.2	4	06/30/95	NA
HF6	MANAGEMENT AND ORGANIZATION						
HF6.1	Develop Regulatory Position on Management and Organization	J. Pittman	NRR/DHFT/HFIB	I.B.1.1 (1,2,3,4)	1	12/31/86	NA
HF6.2	Regulatory Position on Management and Organization at Operating Reactors	J. Pittman	NRR/DHFT/HFIB	I.B.1.1 (1,2,3,4)	1	12/31/86	NA
HF7	HUMAN RELIABILITY						
HF7.1	Human Error Data Acquisition	J. Pittman	NRR/DHFT/HFIB	LI (NOTE 5)	1	12/31/86	NA
HF7.2	Human Error Data Storage and Retrieval	J. Pittman	NRR/DHFT/HFIB	LI (NOTE 5)	1	12/31/86	NA
HF7.3	Reliability Evaluation Specialist Aids	J. Pittman	NRR/DHFT/HFIB	LI (NOTE 5)	1	12/31/86	NA

Table II (Continued)

Action Plan Item/ Issue No.	Title	Priority Analyst	Lead Office/ Division/ Branch	Safety Priority Ranking	Latest Rev.	Latest Issuance Date	MPA No.
HF7.4	Safety Event Analysis Results Applications	J. Pittman	NRR/DHFT/HFIB	LI (NOTE 5)	1	12/31/86	NA
HF8	Maintenance and Surveillance Program	J. Pittman	NRR/DLPQ/LPEB	NOTE 3(b)	2	06/30/88	NA
		CHERNOBYL ISSUES					
CH1	ADMINISTRATIVE CONTROLS AND OPERATIONAL PRACTICES						
CH1.1	Administrative Controls to Ensure That Procedures Are Followed and That Procedures Are Adequate	-	-				
CH1.1A	Symptom-Based EOPs	R. Emrit	NRR/DLPQ/LHFB	LI (NOTE 5)		06/30/89	NA
CH1.1B	Procedure Violations	R. Emrit	RES/DSR/HFRB	LI (NOTE 5)		06/30/89	NA
CH1.2	Approval of Tests and Other Unusual Operations	-	-				
CH1.2A	Test, Change, and Experiment Review Guidelines	R. Emrit	NRR/DOEA/OTSB	LI (NOTE 5)		06/30/89	NA
CH1.2B	NRC Testing Requirements	R. Emrit	RES/DSR/HFRB	LI (NOTE 5)		06/30/89	NA
CH1.3	Bypassing Safety Systems	-	-				
CH1.3A	Revise Regulatory Guide 1.47	R. Emrit	RES/DE/EMEB	LI (NOTE 5)		06/30/89	NA
CH1.4	Availability of Engineered Safety Features	-	-				
CH1.4A	Engineered Safety Feature Availability	R. Emrit	NRR/DOEA/OTSB	LI (NOTE 5)		06/30/89	NA
CH1.4B	Technical Specifications Bases	R. Emrit	NRR/DOEA/OTSB	LI (NOTE 5)		06/30/89	NA
CH1.4C	Low Power and Shutdown	R. Emrit	RES/DSR/PRAB	LI (NOTE 5)		06/30/89	NA
CH1.5	Operating Staff Attitudes Toward Safety	R. Emrit	RES/DRA/ARGIB	LI (NOTE 3)		06/30/89	NA
CH1.6	Management Systems	-	-				
CH1.6A	Assessment of NRC Requirements on Management	R. Emrit	RES/DSR/HFRB	LI (NOTE 5)		06/30/89	NA
CH1.7	Accident Management	-	-				
CH1.7A	Accident Management	R. Emrit	RES/DSR/HFRB	LI (NOTE 5)		06/30/89	NA
CH2	DESIGN						
CH2.1	Reactivity Accidents	-	-				
CH2.1A	Reactivity Transients	R. Emrit	RES/DSR/RPSB	LI (NOTE 5)		06/30/89	NA
CH2.2	Accidents at Low Power and at Zero Power	R. Emrit	RES/DRA/ARGIB	CH1.4		06/30/89	NA
CH2.3	Miltiple-Unit Protection	-	-				
CH2.3A	Control Room Habitability	R. Emrit	RES/DRA/ARGIB	83		06/30/89	NA
CH2.3B	Contamination Outside Control Room	R. Emrit	RES/DRA/ARGIB	LI (NOTE 5)		06/30/89	NA
CH2.3C	Smoke Control	R. Emrit	RES/DSIR/SAIB	LI (NOTE 5)		06/30/89	NA
CH2.3D	Shared Shutdown Systems	R. Emrit	RES/DRA/ARGIB	LI (NOTE 5)		06/30/89	NA
CH2.4	Fire Protection	-	-				
CH2.4A	Firefighting With Radiation Present	R. Emrit	RES/DSIR/SAIB	LI (NOTE 5)		06/30/89	NA
CH3	CONTAINMENT						

Table II (Continued)

Action Plan Item/ Issue No.	Title	Priority Analyst	Lead Office/ Division/ Branch	Safety Priority Ranking	Latest Rev.	Latest Issuance Date	MPA No.
CH3.1	Containment Performance During Severe Accidents	-	-				
CH3.1A	Containment Performance	R. Emrit	RES/DSIR/SAIB	LI (NOTE 5)		06/30/89	NA
CH3.2	Filtered Venting	-	-				
CH3.2A	Filtered Venting	R. Emrit	RES/DSIR/SAIB	LI (NOTE 5)		06/30/89	NA
CH4	EMERGENCY PLANNING						
CH4.1	Size of the Emergency Planning Zones	R. Emrit	RES/DRA/ARGIB	LI (NOTE 3)		06/30/89	NA
CH4.2	Medical Services	R. Emrit	RES/DRA/ARGIB	LI (NOTE 3)		06/30/89	NA
CH4.3	Ingestion Pathway Measures	-	-				
CH4.3A	Ingestion Pathway Protective Measures	R. Emrit	RES/DSIR/SAIB	LI (NOTE 5)		06/30/89	NA
CH4.4	Decontamination and Relocation	-	-				
CH4.4A	Decontamination	R. Emrit	RES/DSIR/SAIB	LI (NOTE 5)		06/30/89	NA
CH4.4B	Relocation	R. Emrit	RES/DSIR/SAIB	LI (NOTE 5)		06/30/89	NA
CH5	SEVERE ACCIDENT PHENOMENA						
CH5.1	Source Term	-	-				
CH5.1A	Mechanical Dispersal in Fission Product Release	R. Emrit	RES/DSR/AEB	LI (NOTE 5)		06/30/89	NA
CH5.1B	Stripping in Fission Product Release	R. Emrit	RES/DSR/AEB	LI (NOTE 5)		06/30/89	NA
CH5.2	Steam Explosions	-	-				
CH5.2A	Steam Explosions	R. Emrit	RES/DSR/AEB	LI (NOTE 5)		06/30/89	NA
CH5.3	Combustible Gas	R. Emrit	RES/DRA/ARGIB	LI (NOTE 3)		06/30/89	NA
CH6	GRAPHITE-MODERATED REACTORS						
CH6.1	Graphite-Moderated Reactors	-	-				
CH6.1A	The Fort St. Vrain Reactor and the Modular HTGR	R. Emrit	RES/DRA/ARGIB	LI (NOTE 3)		06/30/89	NA
CH6.1B	Structural Graphite Experiments	R. Emrit	RES/DRA/ARGIB	LI (NOTE 3)		06/30/89	NA
CH6.2	Assessment	R. Emrit	RES/DRA/ARGIB	LI (NOTE 3)		06/30/89	NA

TABLE III

SUMMARY OF THE PRIORITIZATION OF ALL TMI ACTION PLAN ITEMS,
TASK ACTION PLAN ITEMS, NEW GENERIC ISSUES, HUMAN FACTORS ISSUES, AND CHERNOBYL ISSUES

Legend

NOTES:	1 - Possible Resolution Identified for Evaluation
	2 - Resolution Available
	3 - Resolution Resulted in either the Establishment of New Requirements or No New Requirements
	4 - Issues to be Prioritized in the Future
	5 - Issues that are not GSIs but Should be Assigned Resources for Completion
DROP	- GSI Dropped from Further Pursuit
EI	- Environmental Issue
GSI	- Generic Safety Issue
HIGH	- High Safety Priority
I	- TMI Action Plan Item with Implementation of Resolution Mandated by NUREG-0737
LI	- Licensing Issue
LOW	- Low Safety Priority
MEDIUM	- Medium Safety Priority
RI	- Regulatory Impact Issue
USI	- Unresolved Safety Issue
Continue	- As defined in NRC Management Directive 6.4[1858]

TABLE III (Continued)

ACTION ITEM/ISSUE GROUP	I	S	RESOLVED STAGES			USI	HIGH	MEDIUM	LOW	DROP	CONT.	NOTE 4	NOTE 5	TOTAL
			NOTE 1	NOTE 2	NOTE 3									
TMI ACTION PLAN ITEM (369)														
GSI	84	46	0	0	135	0	0	0	12	9	-	-	-	286
LI	-	0	-	-	75	-	-	-	-	-	-	-	8	83
TASK ACTION PLAN ITEMS (142)														
USI	-	-	-	-	27	0	-	-	-	-	-	-	-	27
GSI	-	20	0	0	36	-	0	0	0	14	-	-	-	70
RI	-	-	-	-	6	-	-	-	-	-	-	-	1	7
LI	-	-	-	-	11	-	-	-	-	-	-	-	12	23
EI	-	-	-	-	13	-	-	-	-	-	-	-	2	15
NEW GENERIC ISSUES (280)														
GSI	-	54	0	0	86	0	4	0	4	100	3	3	-	254
RI	-	1	-	-	5	-	-	-	-	1	-	-	5	12
LI	-	1	-	-	8	-	-	-	-	-	-	-	4	13
EI	-	-	-	-	-	-	-	-	-	-	-	-	1	1
HUMAN FACTORS ISSUES (27)														
GSI	-	8	0	0	8	0	0	0	0	0	-	-	-	16
LI	-	-	-	-	3	-	-	-	-	-	-	-	8	11
CHERNOBYL ISSUES (32)														
LI	-	2	-	-	7	-	-	-	-	-	-	-	23	32
TOTAL:	84	132	0	0	420	0	4	0	16	124	3	3	64	850

THIS PAGE LEFT BLANK INTENTIONALLY

THIS PAGE LEFT BLANK INTENTIONALLY

ISSUE 80: PIPE BREAK EFFECTS ON CONTROL ROD DRIVE HYDRAULIC LINES IN THE DRYWELLS OF BWR MARK I AND II CONTAINMENTS

DESCRIPTION

Historical Background

This issue was identified by the ACRS in 1978 during the operating license reviews of some BWRs. The ACRS posed questions concerning the likelihood and effects of a LOCA which could cause interactions with the CRD hydraulic lines in such a way as to prevent rod insertion, creating the potential for recriticality when the core is reflooded.[537] The staff investigated this potential problem and concluded that the existing SRP[11] criteria were adequate to assure integrity of the CRD hydraulic lines.[538] These criteria assume conservative failure stresses and break locations in coolant pipes and require examination of the effects of pipe whip and jet impingement on essential safety components (including the CRD hydraulic lines) for approximately 100 breaks.

The ACRS discussed this conclusion with the staff during its 273rd meeting on January 6, 1983, but remained concerned about MARK I and II containments, which are smaller and more congested than the MARK III containments upon which the staff's analysis was concentrated.[539] Thus, the issue remained open for the MARK I and II containments.

Following an analysis of the issue in January 1984, the issue was given a LOW-priority ranking (based on Appendix C of NUREG-0933). It was later concluded in NUREG/CR-5382[1563] that consideration of a 20-year license renewal period could change the ranking of the issue to medium priority. However, further evaluation, using the conversion factor of $2,000/man-rem approved[1689] by the Commission in September 1995, resulted in the issue being placed in the DROP category.

During site visits associated with Issue 156.6.1, "Pipe Break Effects on Systems and Components," some new piping configurations were discovered that were not considered in the original evaluation of Issue 80. Thus, in March 1998, during a periodic review of LOW-priority GSIs, NRR indicated[1810] that the priority of Issue 80 should be reassessed in light of the concerns of Issue 156.6.1. As a result, a study[1811] was conducted by RES to determine the safety significance of the issue and the findings were used in this assessment.

Safety Significance

Recriticality during the course of an accident has no direct effect on the health and safety of the public. However, failure to insert a significant number of control rods could pose two separate safety problems. First, when the core is reflooded by cold emergency core cooling water, the reactor will undergo a cold water reactivity transient if the core is not subcritical. The cold water can insert considerable positive reactivity, which means that portions of the core where control rods failed to insert can return to a significant power level and may even overshoot to power levels considerably higher than those experienced during normal operation. Secondly, the recirculation phase of emergency core cooling is sized to carry away decay heat. If fission heat is not shut off, the ECCS may not be sufficient to remove this extra energy, resulting in coolant boil-off, core-melt, and potential containment failure.

Possible Solutions

It may be possible to reduce any safety concerns to acceptable levels by performing more frequent or enhanced inspections of those lengths of primary system piping that could impact the CRD hydraulic lines. If this is not possible, the installation of some type of guard structure may be justified.

EVALUATION

A BWR control rod is scrammed by applying pressure from an accumulator or from the reactor vessel to the volume below the CRD piston and venting the volume above the piston to the scram discharge volume which is near atmospheric pressure. If the insert line is either blocked or broken, a ball check valve built into the CRD (for all BWR/3 and later designs) will admit reactor water to the volume under the piston. (See Figure 80-1.) Thus, the insert line is necessary for scram only when the reactor pressure is low, e.g., during reactor startup.

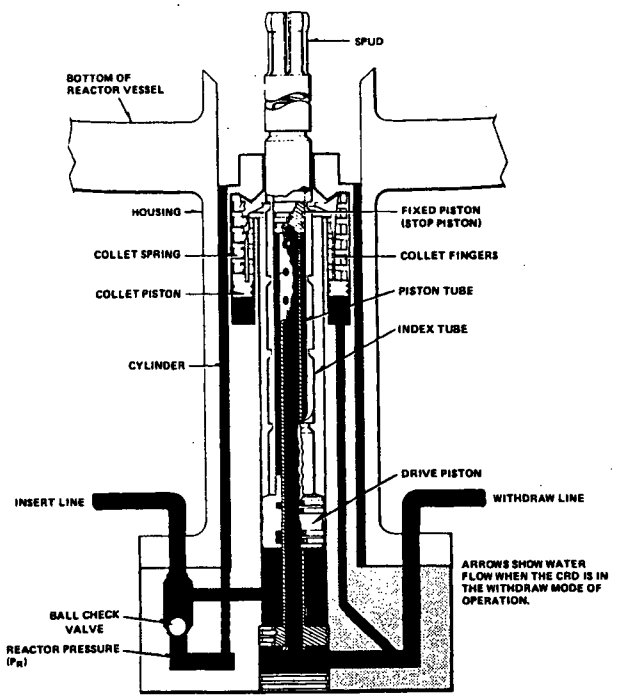

Figure 80-1
BWR Control Rod Drive

Breaking the withdraw line will open the volume above the piston to atmospheric pressure and thus cause (not prevent) a scram. The only way to prevent a scram by mechanical damage to the CRD lines is to crimp the withdraw line shut. Breaking or crimping an insert line will prevent a scram only at low reactor pressure at which time the high energy coolant lines, which are to provide the crimping force, are also at low pressure and the reactor is also at very low power. CRD hydraulic lines originate at the CRD flanges. They are routed up from these flanges, curve 90°, and travel horizontally between the CRD housings. The lines are divided into two banks which exit the area under the vessel in two penetrations of the reactor support pedestal placed 180° apart. After traversing the drywell area, the lines exit the containment via two containment penetrations and are then routed to the two banks of hydraulic control units.

In the area under the reactor vessel, there is only one high-energy line, a two-inch lower vessel head drain which is one input to the RWCU system. This line is not considered a significant hazard to the CRD lines for several reasons:

(1) The CRD lines are routed below a set of I-beams. (The CRD housing support is attached to hanger rods which descend from these beams). Thus, the CRD lines are well shielded from the drain line which is above the I-beams.

(2) Breakage of this drain line would be a small LOCA. Normally, the reactor would continue to run, with the only problems being loss of some RWCU flow and a steam-feed flow mismatch. The reactor would not scram until the drywell pressure rose to the scram setpoint. This does not isolate the reactor and main feedwater would continue. Although some rods might fail to insert, and the resulting fission heat would have to be accommodated, the core would not uncover, and there would be no fuel melting.

(3) Even if main feedwater were lost, HPCI has the capacity to handle a 2-inch break (double-ended) with enough extra flow to supply about 40 bundles operating at average power. Again, the core would not uncover.

(4) If HPCI is insufficient, ADS can vent about 38% of rated steam flow. Thus, unless more than 38% of the rods fail to insert, ADS should be able to depressurize the vessel to the point where the high-capacity low pressure ECCS would keep the core flooded.

In any of these small-break scenarios, there would be no fuel melting because the core would not uncover, and there would be no reflood-induced reactivity transient. Depending on the number of control rods that fail to insert, steam production might exceed the turbine bypass capacity, or the MSIVs might close. In such a case, the heat sink provided by the RHR system would likely be insufficient to accommodate the extra heat, and the containment would eventually overpressurize and fail. This would not result directly in a major release of radioactivity, because there would be no severe fuel damage. In theory, the ECCS systems would eventually deplete the suppression pool and the core would eventually uncover. This situation would be alleviated by the fact that, as the suppression pool depletes, the standby liquid control system would become more effective because the concentration of sodium pentaborate in the coolant would increase as coolant boiled off, and fission heat would diminish. Alternatively, the standby coolant supply system could be used to augment the coolant supply.

In the area between the reactor support pedestal and the drywell wall, the situation is different. Here, the CRD lines pass near the reactor coolant piping and headers. The recirculation piping exits the vessel from two nozzles located near the bottom of the annulus and travels down through the general area where the CRD lines are located to the recirculation pumps which are at a still lower elevation. Flow from the pumps travels through two pipes up to two semi-circular manifolds, which again are in the general area of the CRD lines. Each manifold then supplies driving flow to the jet pumps through a series of risers, one riser for every two jet pumps. The CRD hydraulic lines cross this area under the manifolds. The usual practice is to route each bank in an array of six horizontal rows of hydraulic lines.

The rest of the vessel piping (feedwater, etc.) is located considerably higher in the drywell. This other piping is not considered a significant hazard because of its distance from the CRD lines and the rather narrow annular gap through which any missiles or jets would have to pass. Thus, concentration was placed on the recirculation piping. Given a break in the recirculation system, an estimate of the probability of crimping or sealing a line completely shut was needed. The best that could be done was to attempt to bound the true probability.

It should be noted that the outcome of the accident under consideration is relatively insensitive to scram timing, so long as the rods are successfully inserted. A small LOCA will not cause a reactor scram until either the water level drops to the scram setpoint or the drywell pressure rises to its setpoint. A large LOCA will depressurize the reactor and stop the fission chain reaction by high voiding of the moderator and the rods need not be inserted until the blowdown is complete. Thus,

the interest was in complete rather than partial obstruction of the CRD lines, since partial obstruction would only delay, not prevent, the scram.

No credit was taken for the possibility that non-inserted rods might be widely dispersed and thus may not lead to recriticality. This was not as conservative as it first appeared. The CRD lines are not necessarily routed in such a manner as to disperse the drives they control, and blockage of adjacent lines may well inhibit scram in adjacent CRDs. (Two adjacent control rods can achieve criticality if withdrawn under cold conditions in a BWR.) Finally, insert and withdrawal lines were considered equally, since a large LOCA could depressurize the reactor before a rod with a crimped insert line is completely inserted. (This was in fact quite conservative.) The SLCS is normally capable of borating the moderator to 600 ppm of natural boron (referenced to cold water density) plus a 25% safety margin. This concentration would render the core up to 5% subcritical with all control rods fully removed at cold, xenon-free conditions at the most reactive point in core life. However, following a large LOCA, the SLCS effectiveness is reduced by the diluting effect of the suppression pool, which normally contains about 7½ vessel inventories. Thus, the SLCS can realistically borate only to about 88 ppm. Based on calculations done for ATWS, this would reduce power to roughly 75% of rated (with no rod insertion) but would not shut the reactor down.

Several effects help bring power down.[541] First, existing xenon, augmented by xenon increase, holds power down for roughly 24 hours after the accident. Second, the recirculation pumps are no longer providing forced flow through the core, which tends to bring power down by allowing more voiding. Finally, unless the pipe break area is small enough to limit leakage to less than ECCS injection, water level will drop to ⅔ of the core height, which will greatly reduce moderator density in the upper third of the core. Nevertheless, the core must eventually be brought to cold shutdown by means of the SLCS. Over the long term, this would not be difficult, since more sodium pentaborate mixture could be added to the SLCS so long as the secondary containment remained accessible. It was assumed that the SLCS would be ultimately used to render the core sub-critical over a span of several days.

An examination of the sequence of events was performed. A CRD line can be crimped completely shut by the impact of a missile or energetic fluid jet, if the circumstances are right. First, the line could be caught between the impacting mass and an opposing surface and be flattened shut. Second, if the impact occurred near a point of support for the line, the line could be severed and the stub bent over at a right angle. The line might then be flattened shut at the point of minimum radius of the bend. Finally, a sufficiently energetic impact theoretically could seal the line with only the inertia of the opposite side of the tube providing an opposing force.

In a study of design drawings and field walkdowns of three plants (Browns Ferry 3, Quad Cities 2, and Vermont Yankee) completed as part of the evaluation of Issue 156.6.1, it was found that the break of an RHR return line could also impact the CRD lines, in addition to the recirculation lines. With the exception of BWR/6 plants, the RHR systems in all BWRs are connected to the recirculation system. (In the BWR/6 design, the RHR system returns water to the RCS via a feedwater line or, in LPCI mode, directly into the core bypass region.) The RHR return lines range in size from 16 to 20 inches and connect to, and are unisolatable from, the recirculation lines. Based on rough measurements of MARK I plant drawings, the combined length of the unisolatable portions of the RHR lines (extending out to second isolation valves) was assumed to be 20% of the length of the recirculation lines.

The piping configuration for the three plants reviewed were broken down into two groups, depending on the plant configuration, and the calculations for each group were done separately considering three failure scenarios: pipe whip; fluid jet impingement; and piping fragments.

Group I: Browns Ferry 3 and Vermont Yankee
Group II: Quad Cities 2

Group II was created to characterize those plants in which a recirculation discharge line was believed to be in very close proximity to one-half of the CRD insert and withdraw lines. (See Figure 80-2.)

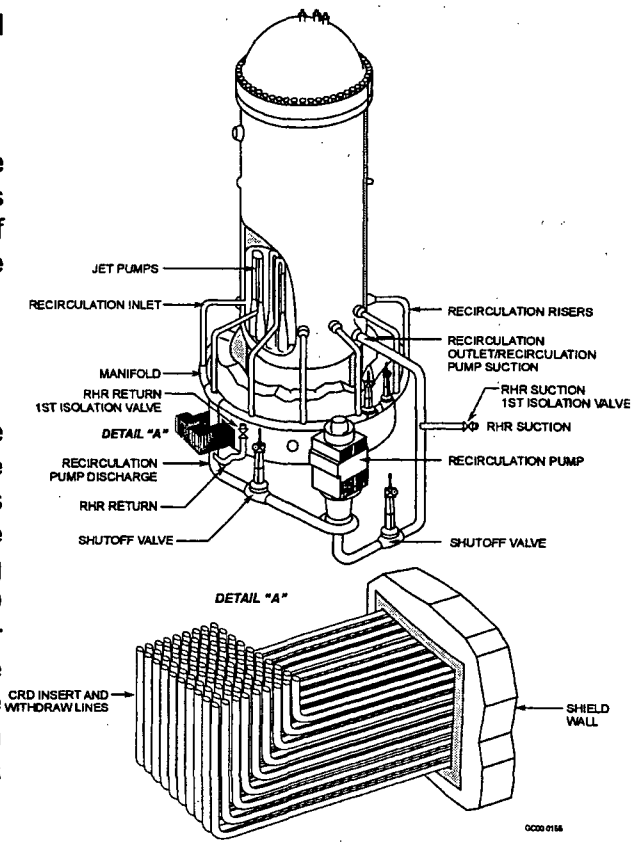

Figure 80-2
Group II Plant Piping Layout

Frequency Estimate

Pipe Whip: In this scenario, a recirculation line breaks in such a manner that the whipping pipe strikes one bank of CRD hydraulic lines. It was assumed that the impact would block the entire bank, either by flattening the lines or by breaking the lines and bending them sharply. The CRD lines are located under the two semicircular recirculation manifolds. Thus, they are vulnerable to pipe whip primarily from the manifolds but also from the vertical recirculation pipes carrying flow to and from the recirculation pumps.

The frequency of a large break somewhere in the recirculation system has a mean distribution of 10^{-4} event/RY. This number was modified to account for several spatial effects, based on the study of design drawings and the system walkdowns mentioned above[1811]:

- Break Location - Pipe whip restraints are located every 30° around the split manifold, except for two 60° intervals located at the ends of the two semicircles. To be a hazard to the CRD lines, the pipe break must be in the interval which spans the CRD lines. Therefore, a factor of 0.05 was used, which was the length of pipe in one 60° interval divided by the total length of recirculation piping.

- Vertical Piping - The CRD lines may be routed close enough to a recirculation pump suction or discharge line to be affected by breaks in these lines. This was conservatively accounted for by introducing a factor of 2.

- Direction of Whip - The pipe break is as likely to cause the pipe to move sideways or away from the CRD lines as toward them. For this, a factor of 0.25 was assumed.

- Two CRD Line Banks - To account for the fact that there are two sets of lines 180° apart, a factor of 2 was used.

- Extent of Whip - Pipes are not expected to whip more than one pipe diameter at the maximum. In addition, although CRD line routing is done in the field, the fact that insulation has to be installed on recirculation lines gives assurance of at least a foot or so of clearance between the recirculation piping and the CRD lines. The probability that the pipe will whip far enough to hit the CRD lines was assumed to be 0.1.

Multiplying the above numbers, the frequency of the partial (10%) core-melt scenario was estimated to be $(10^{-4})(0.05)(2)(0.25)(2)(0.1)$ event/RY or 5×10^{-7} event/RY. (In this and in subsequent calculations, the number of significant figures shown are not intended to imply that the various parameters are known to that accuracy. Instead, the extra figures are given to aid the reader in following the calculations. The uncertainties in these figures will be assessed quantitatively in the "uncertainties and sensitivities" section below.)

When the core is reflooded, about half the core will undergo a cold water reactivity transient. Cladding failure is not a concern here, since it was assumed that every fuel rod in the core would be perforated. Instead, it was necessary to examine the effect of the transient on the fuel matrix itself. The rod drop accident (licensing basis) inserts ~1.3% ΔK in about 0.6 seconds. Reflooding the reactor will insert about 8% ΔK, when filled with cold water (with xenon present). However, it takes about 30 seconds to refill the vessel from the bottom to the top of the core. Thus, the reactivity insertion rate is about a factor of eight below that of the rod drop accident and the rod drop accident is more limiting.

The licensing basis calculations for a control rod drop accident predict a peak fuel rod enthalpy of about 220 calories/gram when the inserted reactivity is 1.3% ΔK.[540] However, the rod drop accident initial conditions include an initial enthalpy of 20 calories/gram (540°F), whereas the cold water reflood transient under consideration here starts with fuel enthalpies as high as 85 calories/gram (2200°F). Thus, since the reactivity insertion rate in the reflood transient is less than the reactivity insertion rate in the rod drop accident, the rod drop accident enthalpy increase (ΔH) can be added to the initial enthalpy of the reflood transient and it can be concluded that the peak enthalpy achieved in the reflood transient will be less than 285 calories/gram.

This peak enthalpy corresponds to a point about 20% into the interval between onset of fuel melting (269.4 calories/gram) and complete melting (336.8 calories/gram). Therefore, we will bound the radiological effects of the reflood reactivity transient by assuming that the radioactive release due to this transient is at most 20% of a core-melt release in those fuel bundles where the associated control rods do not scram. Since only half of the control rods fail to scram, the release is bounded by one-half of 20%, or 10% of a full core-melt.

It should be noted that this estimate, which was used in the original analysis, is rather conservative. First, the assumed reactivity insertion rate was about a factor of eight higher than realistic. Second, the ΔH calculations do not take credit for moderator feedback; more realistic calculations have predicted ΔH values on the order of 100 calories/gram.[540] Finally, the duration of the hypothetical partially-molten state is very brief. Thus, it is doubtful that the reflood reactivity transient would directly cause this much fuel melting.

However, even if there is less fuel melting caused directly by a reactivity transient when the core is reflooded, it is likely that there will be at least some severe fuel damage in the region where the control rods do not insert. As a shutdown core is reflooded, individual fuel rods, now at a high surface temperature, will first experience film boiling and then "quench" as the cladding temperature drops and the rod transitions into nucleate boiling. However, if the control rods are not

inserted, the linear heat generation rate in the fuel rods will greatly increase as the moderator returns and fission heat is generated in addition to decay heat. Even if the fission power is only a few percent of rated power, this would more than double the linear heat generation rate assumed in the ECCS analysis, and it is not likely that cladding temperatures will remain below 2200°F.

Finally, it should be noted that the amount of severe fuel damage will change the source term for purposes of calculating man-rem in a Level III PRA analysis. However, it will be shown later that the evaluation of this issue is governed by the Large Early Release Frequency (LERF), where the exact extent of fuel damage is of less importance given that there is at least some fuel melting.

After core reflood, fission power will continue at a low rate in the core.[541] The recirculation phase of ECCS may not be sufficient to remove this energy and the containment would then fail due to overpressure. Thus, the radioactivity released by the reactivity excursion would escape to the atmosphere in the manner of a BWR-2 release but with one-tenth its magnitude. In addition, the gap activity from the fuel which did not undergo a reactivity transient, and which would otherwise have been trapped within containment, would be released. There is no BWR release category for this situation, but the consequences of this release can be bounded by those of a PWR-8 release.

With the containment open and steam escaping to the atmosphere, the suppression pool will eventually be depleted of water. If the standby coolant supply system fails (for which a probability of 0.015 was assumed), there would be no liquid water supply for the ECCS and the entire core would melt. For this, a full BWR-2 release was assumed. The frequency for the full core-melt scenario was calculated to be $(0.015)(5 \times 10^{-7})$ event/RY or 7.5×10^{-9} event/RY. Theoretically, the partial core-melt frequency should be reduced by a factor of (1 - 0.015), or 0.985, to account for those events that progress to a full core-melt. However, this difference produces an error that is <2% and will be neglected here. (The automated calculations used in the uncertainty studies described below will include this correction.)

Group I Plants: The analysis for the recirculation lines was expanded to include the RHR lines with the following assumptions: (1) the large-break LOCA frequency for the recirculation system is 10^{-4} event/RY; (2) the ratio of the unisolatable portion of the RHR piping length to the total RHR/recirculation piping length is 0.2; (3) only about one-third (0.33) of the RHR length of piping is near the CRD lines; (2) pipe whip may be towards or away from the CRD line bundle (or sideways), so that the probability of motion towards the bundle is 0.25; (3) the probability that a pipe would whip far enough to contact a CRD line bundle is 0.1; and (4) the scenario results in a 10% core-melt. Combining the result for the recirculation system from above, the frequency of a partial (10%) core-melt is given by the sum of 5×10^{-7} event/RY (from the recirculation line break) and $(10^{-4})(0.2)(0.33)(0.25)(0.1)$ event/RY (from the RHR line break). The result is a frequency estimate of or 6.6×10^{-7} event/RY.

Again, if the standby coolant supply system is assumed to fail (for which a probability of 0.015 was assumed), there would be no liquid water supply for the ECCS and the entire core will melt. For this, a full BWR-2 release was assumed. The frequency of the full core-melt scenario was calculated to be 7.5×10^{-9} event/RY + $(0.015)(1.6 \times 10^{-7})$ event/RY or 10^{-8} event/RY.

Group II Plants: The analysis for the recirculation lines was expanded to include the RHR lines with the following assumptions: (1) the CDF increase for RHR piping is the same as calculated for Group I plants (1.6×10^{-7} event/RY); (2) the frequency of a recirculation line break is the same (10^{-4} event/RY); (3) there is an additional contribution to CDF resulting from the recirculation piping being in close proximity to the CRD bundles; (4) the probability is 0.05 that, given a recirculation line pipe

break, the break would be in the discharge line sector; (5) because pipe whip may be towards or parallel to the CRD line bundles that straddle it, there is a probability of 0.5 that the motion will be towards the bundles; (6) the probability that a pipe would whip far enough to contact a CRD line bundle is 1; and (7) the scenario results in a 10% core-melt. Therefore, the frequency of a partial (10%) core-melt is given by the sum of 5×10^{-7} event/RY (from the recirculation line break), 1.6×10^{-7} event/RY (from the RHR line break), and $(10^{-4})(0.05)(0.5)(1)$ event/RY (from the recirculation lines in close proximity). This results in a frequency estimate of 3.16×10^{-6} event/RY.

Again, if the standby coolant supply system is assumed to fail (for which a probability of 0.015 was assumed), there would be no liquid water supply for the ECCS and the entire core will melt. For this, a full BWR-2 release was assumed. The frequency of the full core-melt scenario was calculated to be 7.5×10^{-9} event/RY + $(0.015)(3.16 \times 10^{-6})$ event/RY or 4.74×10^{-8} event/RY.

Fluid Jet Impingement: A fluid jet driven by a 1000 psi pressure cannot directly flatten a tube which contains 1000 psi fluid. However, impingement of such a jet will cause severe vibration of CRD lines. The lines may flatten as they repeatedly hit each other or hit any other structures (e.g., supports) which are within their vibrational amplitude. In reality, one would expect these lines to be more likely to rupture than to flatten. Nevertheless, flattening is possible and was assumed here.

The hazard to the CRD lines depends on their arrangement and distance from the pipe break. A typical practice in routing CRD hydraulic lines is to arrange the lines in six horizontal rows. In such an arrangement, lines located within the matrix would be shielded from some of the force of an external fluid jet. Thus, if the CRD lines are located close to the pipe break, the jet would be concentrated and might penetrate into the CRD lines matrix with sufficient force to cause vibratory flattening. Conversely, if the lines are located at some distance from the break, the jet would be more diffuse and less likely to penetrate past the first row of lines but will also, because of this same dispersion, impinge on a wider area and thus affect more of the outside row.

It was assumed that the break (and the jet) are 22-inches in diameter, which is the diameter of the recirculation manifold. (This is based on judgment. It is possible, of course, for the jet area to be any size from near zero to the equivalent of two pipe diameters, if the break is circumferential. If the break is longitudinal, the length of the break could theoretically extend the length of the manifold. A jet of one pipe diameter seems a reasonable first assumption.) To cover both the near and far cases, it was assumed that the entire top row of lines is flattened and, in addition, a 22-inch (transverse) span is flattened to a depth of all six rows. For a 1000 MWe plant with 185 control rods, this means that 43 rods would fail to insert; this corresponds to 23% of the core.

The above was based on the assumption that the CRD lines are arranged in a matrix 6 rows high and with a pitch of two inches. In such a case, the matrix would be 62 inches wide. The probability of a break in the recirculation manifold being above this span is about 1.7%.

The event tree is similar to that of a pipe whip: a recirculation line breaks (10^{-4}/RY), the break is above the CRD lines (0.017), and the fluid jet is directed downward (0.25). The result is that 23% of the core would experience a reactivity transient and continued steam production would eventually rupture the containment (20% of a BWR-2 release in the uncontrolled fuel plus a PWR-8 release). However, priority parameters calculated from these figures must be doubled to account for the presence of two banks of CRD lines and doubled again to account for the presence of vertical recirculation piping. Thus, the frequency of a partial or 4.6% core-melt (20% of 23%) was estimated to be (10^{-4}) (0.017)(2)(2)(0.25) event/RY or 1.7×10^{-6} event/RY.

If the standby coolant supply system is assumed to fail (0.015), the ECCS would eventually run out of water and the entire core would melt (BWR-2 release). The frequency for this full core-melt scenario was calculated to be (0.015)(1.7 x 10^{-6}) event/RY or 2.55 x 10^{-8} event/RY.

Group I Plants: The analysis for the recirculation lines was expanded to include the RHR lines with the following assumptions: (1) the large-break LOCA frequency for the recirculation system is 10^{-4} event/RY; (2) the ratio of the unisolatable portion of the RHR piping length to the total RHR/recirculation piping length is 0.2; (3) only about one-third (0.33) of the RHR length of piping is near the CRD lines; (4) the probability that the jet direction is towards the CRD lines is 0.1; and (5) the scenario would result in a 4.6% core-melt. Combining the result for the recirculation system from above, the frequency of a partial (4.6%) core-melt was estimated to be 1.7 x 10^{-6} event/RY + (10^{-4})(0.2)(0.33)(0.1) event/RY or 2.36 x 10^{-6} event/RY.

If the standby coolant supply system is assumed to fail (0.015), the ECCS would eventually run out of water and the entire core would melt (BWR-2 release). The frequency for this full core-melt scenario was calculated to be 2.55 x 10^{-8} event/RY + (0.015)(2.36 x 10^{-6}) event/RY) or 3.54 x 10^{-8} event/RY.

Group II Plants: The analysis for the recirculation lines was expanded to include the RHR lines with the following assumptions: (1) the core-melt frequency increase for RHR piping and recirculation line breaks are the same as calculated for Group I (6.6 x 10^{-7} event/RY), plus other additions; (2) the probability is 0.05 that, given a recirculation line break, the break would be in the discharge line sector; (3) the portion of the recirculation discharge line directly adjacent to the CRD bundle is 0.5; (4) the probability is 0.5 that the jet direction is towards the CRD lines; and (5) the scenario would result in a 4.6% core-melt. Therefore, the frequency of a partial (4.6%) core-melt is given by 1.7 x 10^{-6} event/RY + 6.6 x 10^{-7} event/RY + (10^{-4})(0.05)(0.5)(0.5) event/RY or 3.61 x 10^{-6} event/RY.

If the standby coolant supply system is assumed to fail (0.015), the ECCS would eventually run out of water and the entire core will melt (BWR-2 release). The frequency for this full core-melt scenario was calculated to be 2.55 x 10^{-8} event/RY + (0.015)(1.91 x 10^{-6}) event/RY or 5.41 x 10^{-8} event/RY.

Pipe Fragments: The original analysis included the effects of pipe fragments on the CRD lines. Based on the additional insights gained during the evaluation of Issue 156.6.1, the failure modes of large reactor coolant piping were thermal fatigue or intergranular stress corrosion cracking which generally occurred in the region of circumferential welds. This suggested that clean breaks with the production of fragments is almost impossible. For the sake of completeness, the effect of pipe fragments will be discussed, but these sequences will not be included in the final analysis.

The hazard from pipe fragments is different from that of a fluid jet. First, because a solid object can concentrate its impact in a small area, it can block a CRD line directly by denting the line. Second, solid objects will retain this full impact over a great distance, as opposed to the diffusion of a fluid jet. On the other hand, a solid object cannot flatten a CRD line within the matrix without breaking the lines in the rows above.

The original analysis assumed that a section of recirculation manifold with a span equal to a pipe diameter (22 inches) suddenly breaks into fragments. To estimate the number of CRD lines which could be dented shut, it was further assumed that the lines are located immediately adjacent to the manifold. The pipe fragments, which at close range would act like one solid mass, would then

impact a 22-inch span of the top row of CRD lines. Since these lines may well be all withdrawal lines, it was assumed that eleven control rods would fail to insert.

The accident sequence starts out with a large LOCA (10^{-4}/RY). The break must be over the CRD lines (0.017) and pointed down (0.25). The result is that 6% of the core would return to criticality after a mild reactivity excursion (20% of a BWR-2 release per fuel bundle) and the containment eventually would be overpressurized (75,000 man-rem from gap activity). This equates to a 1.2% partial core-melt. Again, the resultant figures must be multiplied by four to account for vertical pipes and two CRD banks. The frequency of this partial (1.2%) core-melt scenario is (10^{-4})(0.017)(0.25)(2)(2) event/RY or 1.7×10^{-6} event/RY.

If the standby coolant supply system is assumed to fail (0.015), the entire core would melt (BWR-2 release). The frequency for this full core-melt scenario was calculated to be (0.015)(1.7×10^{-6}) event/RY or 2.55×10^{-8} event/RY. Once again, these sequences are shown in Table 80-1 for comparison purposes only and were not included in the final analysis.

Table 80-1
Core-Melt Frequency Summary
Group I and Group II Plants

FAILURE MODE	GROUP I		GROUP II	
	Partial Core-Melt (Event/RY)	Full Core-Melt (Event/RY)	Partial Core-Melt (Event/RY)	Full Core-Melt (Event/RY)
Pipe Whip	6.60×10^{-7}	1.00×10^{-8}	3.16×10^{-6}	4.74×10^{-8}
Fluid Jet Impingement	2.36×10^{-6}	3.54×10^{-8}	3.61×10^{-6}	5.41×10^{-8}
Pipe Fragments	[Not included]	[Not included]	[Not included]	[Not included]
TOTAL:	**3.0×10^{-6}**	**4.5×10^{-8}**	**6.8×10^{-6}**	**1.0×10^{-7}**

Other Considerations

Uncertainties and Sensitivities: Many of the parameters involved in the estimates above are not "standard" PRA unavailabilities and, thus, do not have a commonly accepted distribution with mean estimates and error bounds. Nevertheless, an uncertainty analysis was performed although, in the absence of better numbers, the following judgment was used to estimate error bounds in some parameters:

Initiating event - large break LOCA	The "classic" distribution from NUREG-1150[1081] was used - a lognormal distribution, mean of 10^{-4}/RY, with a lognormal error factor of 10
Standby coolant supply unavailability	A lognormal distribution with an error factor of 10 was used, based on NUREG-1150,[1081] but using a mean from the original analysis. The effect of this will be examined in the sensitivity studies below.
Direction, including direction of whip and direction of fluid jet	Depending on whether the pipe is within or outside of the CRD tube array, these parameters were either 50% or 25%. Based mostly on judgment (but partly on some piping diagrams), a normal distribution was used, with the 5th and 95th percentile limits set at ±0.2. Thus, the limits were at 0.30 to 0.80 and 0.05 to 0.45, respectively.

Geometric factors, including the likelihood of a break being located above the CRD lines, or being between the two supports that bracket the CRD lines	In the original analysis, these parameters are based on a length of vulnerable circular manifold divided by the total length of primary system piping. This quotient was then multiplied by a factor of two (for two CRD banks) and another factor of two to account for an assumed equal length of vulnerable piping in the vertical runs. Since modern automated event tree analysis requires split fractions that are less than or equal to unity, the two factors of two were combined with the original quotient into just one parameter. Because this is still basically a ratio of lengths of pipe, the uncertainty distribution was assumed to be normal (rather than lognormal), centered on the point estimate in the analysis. For error bounds, the 5th and 95th percentiles were set at zero and at double the point estimate, based purely on judgment.
Extent of pipe whip	The analysis assumed a likelihood of 0.1 of the CRD lines being impacted by a whipping pipe. For this parameter, an exponential distribution with mean of 0.1 was used.
RHR fraction	This is the ratio of unisolable RHR piping to the total length of primary system piping. The original analysis estimated 0.2 for this parameter. For the uncertainty analysis, a normal distribution was used, with the 5th and 95th percentile limits set at 0.1 and 0.3, based on judgment.
RHR piping location	This is the fraction of RHR piping which is located near the CRD bundles, for the Group I plants. The analysis described above estimated this parameter to be 0.33. For the uncertainty analysis, a normal distribution was assumed, with the 5th and 95th percentile bounds set at zero and 0.66.
Fraction of recirculation piping located within the CRD bundles	This is the fractional length of piping located physically within the CRD bundles, for Group II plants. The analysis above used 0.05 (i.e., 5%). For the uncertainty analysis, a normal distribution was assumed, with the 5th and 95th percentile bounds set at 0.02 and 0.08.

The uncertainty analysis was constructed based on the above parameters, and distributions were calculated for the partial and full core-melt frequencies using 10,000 samples. For the original analysis, the results are shown in Table 80-2. Again, as the ranges in the Table 80-2 clearly indicate, the number of significant figures shown are not intended to imply that these results have high uncertainty, but instead are provided to assist the reader in following the calculations.

Table 80-2
Core-Melt Frequency (Event/RY) Uncertainties
Original Analysis

Event	End State	Point Estimate	Mean	5th percentile	95th percentile	Median
Fluid jet	4.7% core-melt	1.7E-6	1.8E-6	2.8E-8	7.0E-6	5.3E-7
	Full core-melt	2.6E-8	2.6E-8	7.1E-11	1.0E-7	<1.0E-8
Fragmentation	1.2% core-melt	1.7E-6	1.8E-6	2.8E-8	7.0E-6	5.3E-7
	Full core-melt	2.6E-8	2.6E-8	<1.0E-8	1.0E-7	<1.0E-8
Pipe whip	10% core-melt	4.9E-7	4.9E-7	<1.0E-8	2.0E-6	8.8E-8
	Full core-melt	<1.0E-8	<1.0E-8	<1.0E-8	2.5E-8	<1.0E-8

As can be seen, the means are not significantly higher than the point estimates. The distributions are not symmetric, as can be seen by how far the medians differ from the means. This is not surprising considering that the initiating event and the standby coolant supply unavailability are assumed to have log-normal distributions, but the geometric and directional parameters are assumed to have linear normal distributions. Moreover, some of the parameters were assigned 5th percentile bounds at zero, which "chops off" the lower 5% of the distribution and tends to lower the tail of the distributions of the products. Starting with the original analysis, a series of changes and sensitivities were performed, the first of which was the removal of the contribution of fragmentation. The results are shown in Table 80-3.

Table 80-3
Core-Melt Frequencies (Event/RY)
Original Analysis With and Without Fragmentation Contribution

	End State	Point Estimate	Mean	5th percentile	95th percentile	Median
Original analysis	1.2%	1.7E-6	1.8E-6	2.8E-8	7.0E-6	5.3E-7
	4.7%	1.7E-6	1.7E-6	2.6E-8	7.0E-6	5.1E-7
	10%	5.0E-7	5.3E-7	<1.0E-8	2.1E-6	8.7E-8
	Full	5.8E-8	6.6E-8	<1.0E-8	2.3E-7	7.0E-7
Original analysis (no fragmentation)	4.7%	1.7E-6	1.7E-6	2.5E-8	7.0E-6	5.1E-7
	10%	5.0E-7	5.3E-7	<1.0E-8	2.1E-6	8.7E-8
	Full	3.3E-8	3.7E-8	<1.0E-8	1.3E-7	<1.0E-8

Here, the various states are summed by end state, and the "full core-melt " rows are the sums of the contributions of the pipe whip, fragmentation, and fluid jet scenarios. Although the point estimates for the full core-melt states are the sums of the individual full core-melt frequencies from the fluid jet, fragmentation, and pipe whip event trees, the means and limits are the result of adding up the three sequences 10,000 times while varying the initiating event frequency and split fractions about their distributions, and then forming a distribution for the sum. Using the original analysis with the fragmentation contribution removed as a base, the sequences were modified to cover the Group I and Group II plants. The results are shown in Table 80-4.

As can be seen from an examination of Table 80-4, the means do not vary significantly from the point estimates. In addition to the calculations described in Table 80-4, two sensitivity studies were performed. The first was to examine possible double-counting of the vertical runs of RHR and recirculation piping. In the original analysis, the fraction of primary system piping physically located such that a break could threaten the CRD hydraulic lines was estimated by examining the layout of the split manifold, and then doubling the result to account for vertical piping runs for which no layout information was available. This is, in effect, an assumption that a vertical run of either RHR or recirculation piping, equal in length to the length of threatening pipe in the split manifold, is located close enough to pose a hazard to the CRD lines. This is a reasonable estimate for most plants, if no other information is available. However, the analysis of the Group I and II plants added vertical piping contributions to the original analysis. For Group II plants especially, if the analysis has added the contributions of vertical pipes known to be right in the middle of the CRD line

bundles, it is known with equal certainty that these vertical pipes are not located in any other nearby location, and the original accounting for vertical piping runs should be removed.

Table 80-4
Core-Melt Frequency (Event/RY) Uncertainties
Original Analysis, Group I Plants, and Group II plants

	End State	Point Estimate	Mean	5th percentile	95th percentile	Median
Original analysis, no fragmentation	4.7%	1.7E-6	1.7E-6	2.5E-8	7.0E-6	5.1E-7
	10%	5.0E-7	5.3E-7	1.9E-9	2.1E-6	8.7E-8
	Full	3.3E-8	3.7E-8	<1.0E-8	1.3E-7	<1.0E-8
Group I plants	4.7%	2.3E-6	2.4E-6	6.1E-8	9.4E-6	8.0E-7
	10%	6.5E-7	7.0E-7	<1.0E-8	2.8E-6	1.2E-7
	Full	4.5E-8	5.2E-8	<1.0E-8	1.8E-7	<1.0E-8
Group II plants	4.7%	4.7E-6	4.7E-6	1.5E-7	1.8E-5	1.7E-6
	10%	3.1E-6	3.1E-6	9.2E-8	1.2E-5	1.0E-6
	Full	1.2E-7	1.3E-7	<1.0E-8	4.7E-7	1.7E-8

The second sensitivity has to do with the availability of the standby coolant supply. This is not a stand-alone system. Although individual plants vary, every modern BWR has some means of pumping water from the ultimate heat sink into the reactor if the suppression pool is not available. Typically, this is done by providing a valved-out link between RHR service water and the RHR suction lines. Use of standby coolant supply requires a number of manual actions on the part of the operator. The original analysis for this issue used an unavailability for standby coolant supply of 1.5%, based on WASH-1400[16]-era analyses. The NUREG-1150[1081] Peach Bottom PRA performed a much more extensive analysis of the equipment and actions associated with standby coolant supply, and calculated a much higher unavailability (a mean of about 17%). For this screening analysis, the effect of increasing the unavailability of standby coolant supply is not to change the likelihood of an accident, but instead to change the end state from a partial core-melt to a full core-melt. The results of the two sensitivities are shown in Table 80-5.

As can be seen from Table 80-5, removing the double-counting of vertical piping reduces the various core damage frequencies by about 20%, and an updated treatment of standby coolant supply increases the full core-melt frequency by an order of magnitude. This last sensitivity calculation, with the double-counting removed and the updated standby coolant supply, is the "best" estimate for this generic issue for the Group II plants - the most vulnerable group.

Containment Response: In any of these scenarios, even if the entire core is not damaged, the reactor core is not subcritical, and fission heat production continues. The RHR system is sized to remove decay heat. (For example, the Browns Ferry RHR has four heat exchangers rated at 70 million BTU/ hour each, which corresponds to about 2.5% of the reactor's rated thermal power of 3293 MW - equivalent to decay heat about 10 minutes after shutdown.) Obviously, if fission heat production continues with 23% of the rods failing to insert (as in the fluid jet scenario), and the standby liquid control system unable to shut the reactor down, the RHR system will not be able to

accommodate the extra heat and the containment will overpressurize. Thus, any of these end states, even those involving partial core damage, will result in containment failure and a large early release.

Table 80-5
Core-Melt Frequency (Event/RY) Sensitivity Studies

	End State	Point Estimate	Mean	5th percentile	95th percentile	Median
Group II plants	4.7%	4.7E-6	4.7E-6	1.5E-7	1.8E-5	1.7E-6
	10%	3.1E-6	3.1E-6	9.2E-8	1.2E-5	1.0E-6
	Full	1.2E-7	1.3E-7	<1.0E-8	4.7E-7	1.7E-8
Group II plants (original vertical pipe contribution removed)	4.7%	3.9E-6	3.9E-6	1.3E-7	1.4E-5	1.4E-6
	10%	2.9E-6	2.8E-6	8.3E-8	1.1E-5	9.3E-7
	Full	1.0E-7	1.1E-7	<1.0E-8	4.0E-7	1.4E-8
Group II plants (no extra vertical pipe, modern standby coolant supply unavailability)	4.7%	3.3E-6	3.1E-6	9.3E-8	1.2E-5	1.1E-6
	10%	2.4E-6	2.3E-6	5.8E-8	8.9E-6	7.3E-7
	Full	1.2E-6	1.6E-6	2.3E-8	6.3E-6	4.4E-7

Another perspective regarding containment response can be gained by examining the suppression pool inventory. Again, using the Browns Ferry plant as an example, the suppression pool inventory is 135,000 ft^3 (maximum), which is about 8.4 million pounds of water. Normal feedwater flow at full power is about 13.4 million pounds per hour. If fission power were to continue at about 10% of rated due to rods failing to scram, the entire suppression pool inventory would be boiled off in about 6.3 hours (not including the existing reactor water inventory, nor including the effect of residual heat removal, both of which would stretch the time somewhat).

End States: The end states in this screening analysis, i.e., 1.2%, 4.7%, 10% and 100% core-melt, are subject to considerable uncertainty. These numbers would be of significance if this calculation were carried out to PRA Level III consequences (e.g., man-rem/RY), as was done in the original analysis. However, a screening decision can be made based on LERF and thus the uncertainty in the degree of core damage was not explored.

Large Early Release Frequency (LERF): An uncertainty study was also performed for the LERFs for the various scenarios. The results are shown in Table 80-6.

It should be noted that some of these large early releases are much larger than others, since the total LERF includes sequences that breach containment, but only melt a small part of the reactor core. Nevertheless, the numbers are significant in that any increase in LERF greater than 10^{-6}/RY passes the screening tests documented in Figure C4 of the NRC Management Directive 6.4 Handbook.

It should also be noted that, for the specific case of Group II plants and using the NUREG-1150[1081] unavailabilities for standby coolant supply, the full core damage frequency is 1.2×10^{-6} event/RY, and all of these sequences lead to containment overpressurization and failure.

Table 80-6
Large Early Release Frequencies (Event/RY)

	Point Estimate	Mean	5th Percentile	95th Percentile	Median
Plants with Original Analysis Piping Configuration (no fragmentation)	2.2E-6	2.4E-6	4.9E-8	9.5E-6	7.7E-7
Group I Plants	3.0E-6	3.3E-6	8.7E-8	1.3E-5	1.1E-6
Group II Plants	6.8E-6	7.0E-6	2.2E-7	2.6E-5	2.6E-6

Basic Assumptions: There are several mechanistic or phenomenological postulates in the analysis that were not addressed in the uncertainty analysis because they were postulated to be true by the generic issue itself. Like an importance measure calculation, screening of a generic issue assumes these to be true, and then attempts to estimate their risk significance. Nevertheless, the task action plan for the issue should include an investigation of the validity of the following assumptions.

(1) Can a whipping pipe or other moving mass crush a CRD line completely shut? A CRD line pressurized to 1000 psi will resist denting. It is straightforward to show that the imposed force must be at least 1500 pounds per linear inch just to overcome the internal pressure, with no credit for the stiffness of the stainless steel tube wall, and assuming that the tube is in contact with a stationary support on the opposite side from the impacting mass.

(2) A fluid jet driven by 1000 psi cannot directly flatten a tube filled with 1000 psi fluid. The analysis assumes that the CRD lines will strike each other when exposed to the jet, and will flatten by repeated impacts.

(3) If a CRD line were crimped shut, would the internal fluid pressure be sufficient to overcome the stiffness of the stainless steel and partially re-open the tube, to the point where the associated control rod would eventually be inserted?

(4) The pipe whip analysis for the Group II plants assumes that the whipping pipe will bend the much-smaller CRD hydraulic lines to the point where the small lines will develop "kinks" which will close off all flow. The configuration of the CRD lines is such that the lines have a 90-degree bend or elbow near the point of impact, and are not likely to have significant lateral support - the impacting large pipe can bend the smaller lines without stretching them. Experience suggests that this failure mode is quite credible, but the rather large number of CRD lines may add up to a significant resistive force, even though the individual lines may be relatively weak. An investigation of the force needed to "kink" a significant number of lines would be of considerable interest.

An investigation of these assumptions, either by calculation or by experiment, could add significant confidence to the resolution of the issue.

Early BWR Designs: As was described earlier, the control rod drive mechanism for all BWR/3 and later designs incorporates a ball check valve which prevents a broken insert line from interfering with a scram. There are still two operating plants, both of the BWR/2 product line, for which this may not be true. However, the BWR/2 design uses an ECCS for large-break LOCAs which is based on a high volume core spray - the core is not re-flooded after a large line break located

below the level of the core. Thus, the accident scenarios associated with the issue do not apply to the BWR/2 design.

Old vs. New Analysis: An obvious question is, why has the conclusion changed from the original analysis? This is in spite of the fact that the pipe fragmentation sequences have been removed. An examination of the table will show two reasons. First and most obvious, the more vulnerable piping configurations in the Group I and Group II plants were not known when the original analysis was performed in 1984. These piping configurations are obviously of greater concern.

A second reason is more subtle. When the original analysis was performed, the generic issue screening criteria were based only on either core damage frequency or man-rem/RY. In 2002, a new set of criteria were added which were based on LERF. This particular generic issue involves a partial core-melt, and thus a relatively low source term and low public risk, but a high likelihood of containment failure, because only a small amount of fission heat will overwhelm the capacity of the RHR heat exchangers. Thus, the LERF criterion becomes limiting.

CONCLUSION

Applying the criteria of NRC Management Directive 6.4, Figure C4, the potential changes in the large early release frequencies (ΔLERF) placed the issue in the category where work on a technical assessment was pursued.[1809] This conclusion was corroborated by the consideration of uncertainties in the analysis.

The technical assessment included completion of an analysis of significant high-energy piping breaks in the areas of the insertion and withdrawal CRD piping, using the ANSYS code. The results of this analysis indicated that the impacting pipe would have insufficient energy for the CRD pipe to be crimped totally closed following a high-energy pipe break. In addition, actual pipe-to-pipe impact testing showed that, as the postulated energy of the impacting piping increases, the CRD piping would break open before being crimped closed (zero flow area).

Scram motion in a BWR CRD is affected by admitting the pressure in the scram accumulator to the area below the drive piston, and venting the area above the piston to the scram discharge volume, which is at atmospheric pressure. The CRDs are equipped with a ball check valve, which will admit reactor water below the drive piston if the inlet line pressure falls below reactor pressure. Thus, neither crimping nor breaking the insert line will prevent a scram when the reactor is at power. By contrast, crimping the withdrawal line shut would inhibit a scram; however, breaking the withdrawal line (thereby venting it to atmospheric pressure) will cause the drive to scram. Since the piping is expected to fail open before it is crimped closed, the control rods will scram using reactor pressure. Therefore, this issue was closed with no changes to existing regulations or guidance.[1868]

REFERENCES

11. NUREG-0800, "Standard Review Plan for the Review of Safety Analysis Reports for Nuclear Power Plants," U.S. Nuclear Regulatory Commission, (1st Edition) November 1975, (2nd Edition) March 1980, (3rd Edition) July 1981.

16. WASH-1400 (NUREG-75/014), "Reactor Safety Study, An Assessment of Accident Risks in U.S. Commercial Nuclear Power Plants," U.S. Atomic Energy Commission, October 1975.

537. Memorandum for W. Dircks from R. Fraley, August 18, 1982.

538. Memorandum for R. Fraley from H. Denton, "ACRS Inquiry on Pipe Break Effects on CRD Hydraulic Lines," October 29, 1982.

539. Letter to W. Dircks from J. Ebersole, "ACRS Comments Regarding Potential Pipe Break Effects on Control Rod Drive Hydraulic Lines in the Drywells of BWR Mark I and II Containments," March 16, 1983.

1081. NUREG-1150, "Severe Accident Risks: An Assessment for Five U.S. Nuclear Power Plants," U.S. Nuclear Regulatory Commission, (Vol. 1) December 1990, (Vol. 2) December 1990, (Vol. 3) January 1991.

1563. NUREG/CR-5382, "Screening of Generic Safety Issues for License Renewal Considerations," U.S. Nuclear Regulatory Commission, December 1991.

1689. Memorandum to J. Taylor from J. Hoyle, "COMSECY-95-033 - Proposed Dollar per Person-Rem Conversion Factor; Response to SRM Concerning Issuance of Regulatory Analysis Guidelines of the U.S. Nuclear Regulatory Commission and SRM Concerning the Need for a Backfit Rule for Materials Licensees (RES-950225) (WITS-9100294)," September 18, 1995.

1809. Memorandum to S. Collins from A. Thadani, "Generic Issue 80, 'Pipe Break Effects on Control Rod Drive Hydraulic Lines in the Drywells of BWR MARK I and II Containments,'" February 14, 2003.

1810. Memorandum to M. Knapp from S. Collins, "Periodic Review of Low-Priority Generic Safety Issues," March 25, 1998.

1811. Memorandum to F. Eltawila from M. Mayfield, "Transfer of Responsibility for Generic Issue 80, 'Pipe Break Effects on Control Rod Drive Hydraulic Lines in the Drywells of BWR MARK I and II Containments,'" April 3, 2001.

1868. Memorandum to L. Reyes from C. Paperiello, "Closure of Generic Issue 80, 'Pipe Break Effects on Control Rod Drive Hydraulic Lines in the Drywells of BWR Mark I and II Containments,'" November 17, 2005.

ISSUE 185: CONTROL OF RECRITICALITY FOLLOWING SMALL-BREAK LOCAs IN PWRs

DESCRIPTION

Historical Background

This issue was identified[1730] following an NRR request for reconsideration of the safety priority ranking (DROP) of GSI-22, "Inadvertent Boron Dilution Events," based on new information on high burn-up fuel and new calculations provided by the B&W Owners' Group (B&WOG). Reactivity insertion event tests indicated that high burn-up fuel may be more susceptible to reactivity events than previously expected, and fuel failure may occur at fuel enthalpy values that were previously judged acceptable. In addition, B&WOG calculations predicted prompt criticality with significant heat generation under conditions that may result from small-break (SB) LOCAs. NRR believed that there is no regulatory guidance applicable to this issue.

NRR had previously reviewed studies of deborated water formation during SBLOCAs in PWRs and concluded that: (1) recovery of natural circulation was unlikely to lead to core damage from reactivity transients; and (2) starting or "bumping" of RCPs could lead to a large reactivity transient. However, recent B&WOG calculations predict prompt criticality from natural circulation restart with an accompanying significant heat generation, which raised serious questions about potential reactivity events.

NRR was informed in June 1995 that, if a B&W-designed NSSS spends some time in a boiling/condensing mode following an SBLOCA, a substantial amount of deborated water may accumulate in the RCP suction piping.[1728] Analysis showed that RCP restart would pump the deborated water into the core and might cause a criticality. In July 1995, the scope of the issue was expanded to include: (1) deborated water in the steam generators, cold legs, reactor vessel downcomer, and reactor vessel lower plenum; (2) restart of natural circulation as a mechanism for causing deborated water to flow into the core, and possibly result in criticality; and (3) the potential for prompt criticality.[1728] In late 1996, Framatome Technologies, Inc. (FTI) developed guidance to restrict RCP restart to prevent potential fuel damage.[1728]

In June 1998, the B&WOG prepared a progress report which reiterated that, with conservative assumptions, displacement of deborated water had the potential to cause a prompt-critical condition due to insertion of several dollars of excess reactivity.[1729] In this report the B&WOG concluded that this was an operational issue, not a safety concern, and that potential plant consequences under 10 CFR 50.46 assumptions need not be determined. The June 1998 report was not sufficient to assess the work that had been completed and NRR did not concur with the B&WOG conclusions.

On September 11, 1998, the B&WOG reported new calculation results, provided PRA values to clarify the significance of the safety concern, committed to provide an in-depth investigation to substantiate the September 11, 1998, results, and stated that three utilities had responded to the FTI recommendations regarding RCP restart and two others were in the process of responding.[1728]

Safety Significance

Although the original request from NRR was for reopening Issue 22, "Inadvertent Boron Dilution Events," the scope of Issue 22 covered inadvertent boron dilution events when the reactor was in shutdown or refueling modes, a completely different scenario with different conditions, causes, and potential fixes. Thus, Issue 185 was initiated to address this new scenario.

Some SBLOCAs in PWRs involve steam generation in the core and condensation in the steam generators, causing deborated water to accumulate in part of the RCS. Restart of RCS circulation may cause a deboration event by moving this deborated water into the core. The problem is perceived to be greater in most NSSS designed by B&W than in the W and CE designs because the B&W lowered-loop geometry may favor the accumulation of more deborated water.

Although the B&WOG calculated that the restart of natural circulation following some SBLOCAs may result in prompt criticality with deposition of significant energy in the fuel, similar information has not been provided for operating W- and CE-designed NSSS, although W representatives have written that RCP restart with a large quantity of deborated water must be prevented.

Potential core damage associated with RCP restart was not addressed in the B&WOG PRA and ideally would be included, since operator error may lead to inappropriate RCP restart and there are uncertainties associated with the analysis underlying restart guidance. Consequently, NRR did not concur with the B&WOG conclusion that there is no regulatory concern associated with potential recriticality due to restart of natural circulation. Although this analysis focused on B&W reactors, the generic issue was applicable to all PWRs.

Possible Solution

Because of the potential consequences of an inappropriate RCP start, the B&WOG advised licensees with B&W-designed NSSS to restrict RCP restart following SBLOCAs until the deborated water has been adequately mixed with borated water. This industry voluntary action could be included in regulatory guidance to be issued to all plants.

At the time of the evaluation of this issue, RES was supporting a test program at the University of Maryland thermal-hydraulic test facility that represented the B&W NSSS configuration. Test data had been obtained for restart of RCPs and of natural circulation, but applicability to the issue of deborated water had not been established. (When confronted with a similar problem with the CE System 80^{+}, the planned boron concentration in the refueling water storage tank was increased to ensure non-criticality.)

PRIORITY DETERMINATION

In the request for prioritization of this issue,[1730] NRR stated that "The fuel damage probability indicates that a significant safety problem is unlikely. Further, we judge that a backfit would not be cost-beneficial and would not be justified under 10 CFR 50.109. Nonetheless, modeling uncertainties are high and the potential consequences associated with prompt criticality are of sufficient concern that further assessment may be necessary."

The essence of the issue, as defined by NRR, was the thermal-hydraulic modeling uncertainty and the uncertainty in the potential consequences associated with prompt criticality. This analysis will therefore assess the importance of the thermal-hydraulic phenomena and the consequences of

prompt criticality, i.e., the "worst" will be assumed for these two effects, namely that the boron dilution phenomenon will occur and that a prompt criticality will result in significant fuel damage, and the risk importance of the two effects, assuming the worst, will be estimated. These assumptions were appropriate for this analysis. The actual evaluation of the thermal-hydraulic phenomena and the consequences of prompt criticality was reserved for the resolution of the issue.

Frequency Estimate

Description of Sequence (B&W NSSS Design): The event sequence for a B&W design was explored first, since the thermal-hydraulic phenomena were somewhat simpler. (Other PWR designs were examined in a later section.) The plant chosen for analysis was Crystal River Unit 3, a fairly typical 177-fuel assembly lowered-loop design. This plant was chosen primarily because of the ready availability of a RELAP model and considerable design information.

The event of interest begins with an "S2" small LOCA. As reactor coolant escapes, ECCS and AFW start on low pressurizer pressure. (The emergency procedures instruct the operator to trip the RCPs once successful operation of high pressure injection is verified.) The high pressure injection pumps attempt to replace the lost coolant. However, the break size is too large and the primary system pressure too high for the HPI pumps to maintain inventory, and the coolant level in the pressurizer drops. Eventually, the pressurizer empties and steam spaces form at the tops of the hot leg pipes, just above the steam generators, because these locations are the highest points in the system (see Figure 1, taken from NUREG/CR-5640[1759]). When the level drops to the point where there is no longer a liquid pathway to the top of the steam generators, natural circulation ceases and the coolant in the reactor core region heats up and begins to boil, keeping system pressure high. The coolant level continues to drop and the upper portion of the steam generator tubes fill with steam.

The AFW systems in B&W plants spray feedwater into the upper portion of the steam generators. As the primary level drops further, more and more cool steam generator tube surface is exposed to the steam in the primary system, condensing it back into liquid. Eventually, as more and more steam generator tube surface is exposed to the vapor phase, the heat removal from condensation matches the heat generation in the core.

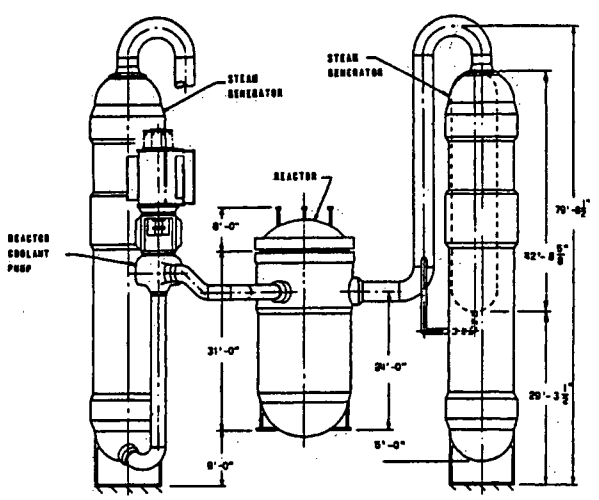

Figure 1: B&W NSSS

An equilibrium condition would be achieved, with the coolant boiling in the core and condensing in the steam generators, if it were not for the continued loss of coolant through the "S2" break. As level drops further, and still more cool steam generator tube surface is exposed to the vapor phase, primary pressure drops. (The heat generation rate in the core is also slowly decreasing due to radioactive decay, which contributes to the pressure drop.) As the pressure decreases, the flow rate from the high pressure coolant injection trains increases, and eventually the injection rate will equal the loss through the break.

This scenario is actually a successful operation of the ECCS which would avoid severe core damage. However, this method of core cooling, which boils coolant in the core, condenses coolant in the steam generator, and returns coolant to the core through the cold leg, also removes the soluble boron from the coolant via distillation. The condensed coolant in the steam generator lower plena and cold leg piping will have a nearly zero boron concentration, while the boron concentration in the reactor vessel core volume will increase. (There will be some injection of borated coolant at the RCP seals, but the coolant return flow will carry this boron into the reactor vessel.)

The deborated coolant region will not be troublesome as long as the system remains in the "reflux boiling" state, since deborated coolant entering the reactor will mix with the more concentrated boron solution in the core region. However, if the system is refilled to the point where liquid natural circulation restarts, or if the RCPs are started, the deborated, relatively cool coolant which has accumulated in the cold legs and steam generators will be swept into the reactor core. In a typical 177-fuel assembly B&W NSSS (including Crystal River), the tube side free water volume of each steam generator is 2030 cubic feet,[1759] while the water volume of the reactor vessel is 3910 cubic feet (from the Crystal River RELAP model). Thus, the two steam generators would contain a water volume slightly larger than that of the reactor vessel. It appeared plausible that, should natural circulation be reestablished, the deborated coolant could momentarily flush the borated coolant out of the core with relatively little mixing. As was stated above, it was assumed that this happens, consistent with the "worst-case" assumption. It should be noted that there was considerable uncertainty as to the reality of this phenomenon.

After shutdown, decay heat will drop rapidly to about 2% of rated thermal power and continue to decrease. At this power level, a simple hand calculation shows that, if natural circulation is lost, the core will boil enough coolant to fill the steam generators with condensed coolant in about 25 minutes. Thus, the scenario is credible. Since there is return flow of condensed coolant from the steam generators to the reactor through the cold legs, it is unlikely that any dissolved boric acid will diffuse back into the steam generator volumes. However, it is possible that deborated coolant will gradually fill the reactor vessel downcomer and lower plenum with soluble boron concentrating (and possibly precipitating) in the core region. How much mixing will occur in the lower plenum and downcomer is a source of uncertainty that will ultimately need to be resolved but, for this analysis, it was assumed that the deborated volume in the steam generators will be sufficient to (at least momentarily) flood the core region.

If the accident should occur early in the fuel cycle, there may be sufficient excess reactivity in the core for the deborated coolant to bring the core to criticality even though all the control rods have been inserted. The possible power excursion may be sufficient to cause severe damage to the core, even though the ECCS has successfully kept the core covered with coolant. It is this power excursion that formed the basis for this issue.

Event Tree: An event tree was constructed to quantify this scenario (see Figure 2).

Small Break LOCA: The initiating event for this scenario is a LOCA of the proper size - large enough for the high pressure injection to not keep up with coolant loss at full primary system pressure, but small enough to not depressurize the system. This is an "S2" break as defined in NUREG-1150,[1081] a break of ½ to 2 inches equivalent diameter, corresponding to a fluid loss rate of approximately 100 to 1500 gpm. The frequency of such breaks in NUREG-1150[1081] was 10^{-3}/RY.

Number of HPI trains: Once the break occurs, high pressure injection will initiate. This particular plant has three HPI trains, two of which will start automatically, and one of which is kept "in

reserve," and may be manually initiated by the operator. For this analysis, which was intended to be more generic, it was assumed that all three trains will be started shortly after the onset of coolant loss. Thus, four outcomes were possible corresponding to zero, one, two, or three trains

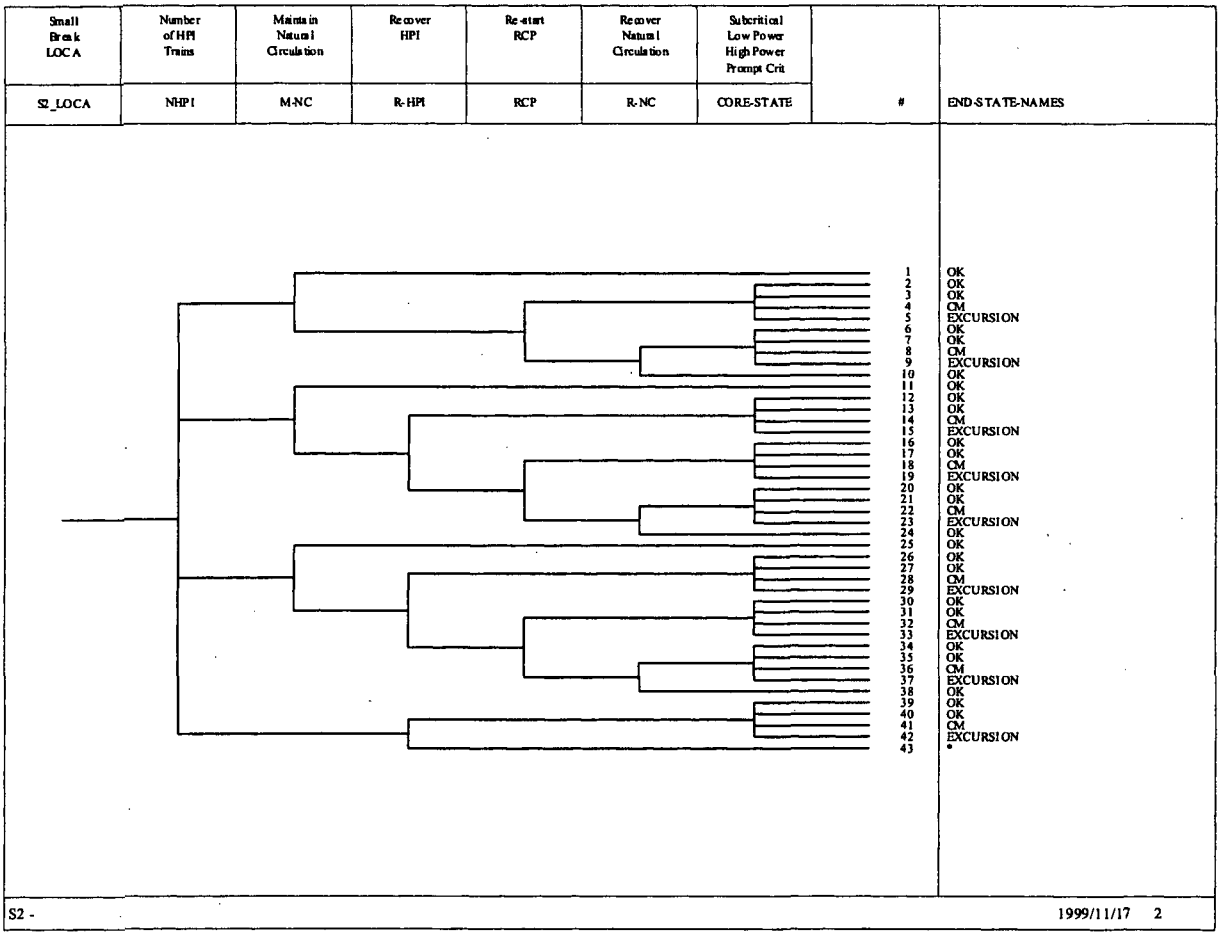

Figure 2: Event Tree

operating. A full calculation of the probabilities of these four system states was beyond the scope of this analysis. Instead, it was assumed that the likelihood of a single train failure would be dominated by the unavailability of the pump (3.8×10^{-3} in the Crystal River SPAR-2QA model). The SPAR-2QA model was presented at the 1998 Probabilistic Safety Assessment and Management (PSAM IV) Conference in New York by S. M. Long, P. D. O'Reilly, E. G. Rodrick, and M. B. Sattison in their paper on the "Current Status of the SAPHIRE Models for ASP Evaluations." For the failure probability of the entire system, the SPAR-2QA figure for the entire system was used (1.019×10^{-4}). If the unavailability of one pump is "p," the four probabilities, using the rare event approximation, are as follows:

$P(0) = 1.019 \times 10^{-4}$ (the SPAR-2QA number for the entire system[1761])

$P(1) = 3(1-p)p^2 = 4.32 \times 10^{-5}$

$P(2) = 3(1-p)^2p = 1.113 \times 10^{-2}$

$$P(3) = 1 - [P(0) + P(1) + P(2)] = 0.9887$$

Two caveats should be noted. First, the number of significant figures was used for the convenience of forming differences between numbers and for the reader who wishes to reproduce the calculation, and not because the unavailabilities were known to such high accuracy; appropriate rounding will be performed at the end of the calculation. Second, the approximation used assumed that all common cause failures will fail all three trains, and also that failure other than pump failures will fail all three trains. For this reason, P(0), the probability of no trains operating, was higher than P(1).

It was assumed that the operator will shut down the RCPs with a probability of unity. This is a standard "no miracles" assumption in all PRA calculations - a failure to follow procedures is never credited as a positive outcome.

Maintain Natural Circulation: If the flow out the break is less than or equal to the injection flow from the HPI trains, the coolant level will not drop out of the pressurizer, and natural circulation will be maintained. If the HPI trains cannot keep up with the break flow, the level will drop and natural circulation will be lost. (Eventually, pressure will drop to the saturation pressure for the existing coolant temperature, and HPI flow will increase as pressure drops.)

The likelihood of a particular break size would decrease as the equivalent diameter increases, which is why large break "A" LOCAs are less likely than small break "S1" LOCAs, which in turn are less likely than very small break "S2" LOCAs. However, for this analysis, it was assumed that the likelihood of a particular break size will be constant over the S2 size interval, which was assumed to be equivalent to the "G3" coolant loss rate assessed in NUREG/CR-5750.[1760] Comparing these coolant loss rates with the capability of the HPI pumps:

Number of Pumps	Flow at 1600 psi[1759] (gpm)	Flow at 2255 psi[1759] (gpm)	Fraction of 100-1500 gpm "G3" Spectrum Covered	Probability of Loss of Natural Circulation
1	400	270	21.4%	79%
2	800	540	50%	50%
3	1200	810	78.6%	21%

Thus, the likelihood of loss of natural circulation would depend on the number of HPI trains running. If all three trains of HPI fail, the probability of loss of natural circulation is unity.

Recover HPI: There is some likelihood that the operator will be able to recover a train of HPI. To estimate this probability, the operator's probability of recovery for the "SLOCA" sequences in the Crystal River SPAR-2QA model were used. This parameter, designated "SLOCA-XHE-NOREC" was 43% of non-recovery, implying a recovery probability of 57%.

Restart RCPs: For the usual small-break LOCA sequences, procedures call for the operator to trip the RCPs once it is verified that a train of HPI is operating. (The RCPs add a significant amount of energy to the primary system.) However, if the operator discovers that natural circulation has been lost and coolant is boiling in the core, the operator may elect to restart an RCP to ensure that the upper portion of the core does not rise above the liquid/vapor interface but instead is cooled

by two-phase flow. There was essentially no precedent for this situation and, based purely on judgment, a probability of 10% was used for this parameter.

Recover Natural Circulation: The operator may be able to recover natural circulation, possibly by using the charging pumps (for which no credit has been given up to this point - the Crystal River plant does not have separate charging pumps, but other plants may be so equipped), by isolating the break (which might be a stuck-open valve for a LOCA in this size range), by manually starting a reserve train of HPI (in plants so equipped, such as Crystal River), or by blowing down the secondary side of a steam generator, thereby reducing the temperature and pressure in the primary, reducing flow out the break in the system, and permitting more injection flow from the HPI trains. Eventually, as decay heat slowly drops, the coolant level will rise. Again, there was no available estimate for this situation. Based on judgment, 50% was used for this parameter.

Core State: PWR cores must be designed with sufficient excess reactivity to be able to remain at power throughout the fuel cycle. At the end of the cycle, there is no soluble boron in the coolant. Conversely, a high boron concentration is present at the beginning of the cycle to compensate for the excess reactivity designed into the core. The longer the cycle, the more excess reactivity must be designed into the core, and the higher the beginning-of-cycle boron concentration. However, there is a limit to how high a boron concentration can be used, since the presence of soluble boron causes the moderator temperature coefficient (MTC) to be less negative. At the beginning of the cycle, the MTC is usually close to zero. The core designer may (and usually does) use burnable poison to further extend the cycle. The burnable poison holds reactivity "down" at the beginning of the cycle without causing the MTC to become excessively positive.

Boron concentration thus drops during the course of the cycle, very rapidly at first as xenon and samarium build up to equilibrium levels. Boron concentration as a function of burnup (commonly called "boron letdown curves") for the reactor under study is shown in Figure 3 (from the Crystal River updated FSAR). (It should be noted that the full equilibrium cycle for this plant is 310 effective full power days, even though the curve reaches zero boron concentration slightly before 300 days. It is at this point that the transient rod bank is moved out of the core, which extends core life by approximately 30 days.)

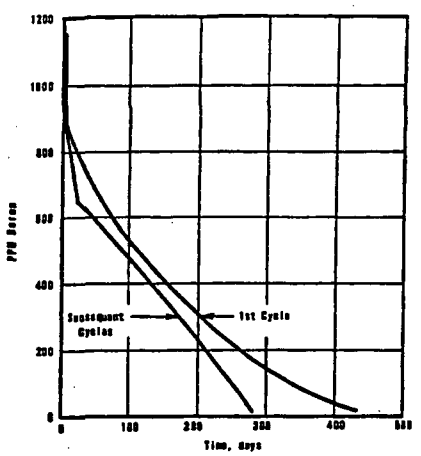

Figure 3: Boron Letdown

The significance for this analysis is that, at the beginning of the cycle, the reactivity worth of the soluble boron is greater than the worth of the control rods, Thus, if the soluble boron is swept out of the core and replaced with deborated coolant, the control rods do not have sufficient worth to keep the core in a subcritical state.

The boron letdown and reactivity characteristics can vary considerably from plant to plant or even from cycle to cycle, since the core designer may be aiming for a longer cycle, a flatter power distribution, maximum burnup on older fuel assemblies, or any number of other factors. Thus, although this calculation must of necessity be based on one set of core parameters, these numbers must not be taken as being universally applicable to all plants and all cycles.

This particular cycle (the equilibrium cycle described in the Crystal River updated FSAR) has a soluble boron worth of 0.01 %Δk/k per ppm of boron, a total rod worth of 7% (not including a stuck

rod allowance of 1.6 %), and moderator and Doppler deficits of 0.2% and 1.7%, respectively. The excess reactivity was estimated and is shown in Figure 4.

As can be seen from Figure 4, there is an interval of approximately 24 days at the beginning of the cycle during which the control rod worth is insufficient to render the core subcritical. The probability of occurrence of such a criticality is just the number of days where this is possible (24) divided by the total number of days in the cycle (310), giving a probability of approximately 7.7%.

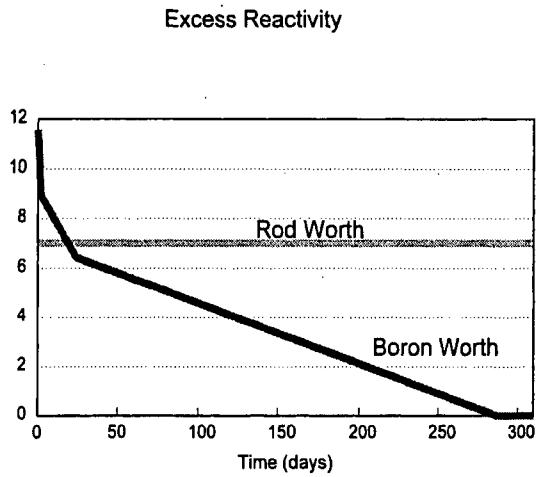

Figure 4: Excess Reactivity vs. Time

However, criticality does not automatically equate to severe core damage. In this scenario, AFW is operating, and both steam generators are capable of removing heat from the primary system. This plant is equipped with two AFW pumps, each capable of supplying 740 gpm of feedwater,[1761] which would accommodate approximately 7% of the reactor's rated thermal power. With both AFW pumps operating, and subtracting 2% for the decay heat being produced in the reactor core, the steam generators should be able to accommodate fission heat up to approximately 12% of rated power. However, the fission heat will not be continuous, but will "chug" as the deborated coolant sweeps in and out of the core. Therefore, it was assumed that the steam generators can accommodate power pulses of up to double the continuous power, or approximately 25% of rated thermal power. Any power pulse above 25% was assumed to result in core damage.

If the net reactivity is greater than approximately 0.5% $\Delta k/k$, the core will be in a state of prompt criticality and will experience a power excursion. This was also assumed to result in severe core damage consistent with the "worst-case" assumption discussed previously.

If the deborated coolant fills the core area relatively slowly, as would be expected in the case of a refill of the system and a restart of natural circulation, there will be time for the moderator temperature coefficient to limit core power. The situation is different if the RCPs are restarted. The design forced coolant flow rate (131.3×10^6 lb/hr) corresponds to a core transit time of approximately 0.6 seconds. All four coolant pumps will not be switched on simultaneously, so the deborated coolant may take two or three seconds to flood the core. This is still significantly less than the thermal time constant of the fuel rods (roughly 6 seconds for most designs), and there will be little negative feedback provided by the moderator temperature coefficient. Moreover, there is a fairly strong tendency for the incremental axial reactivity worth to concentrate near the top in any core with significant burnup, which will accelerate the incremental reactivity insertion rate. Therefore, only Doppler feedback was assumed for event sequences involving restart of the RCPs. (The moderator temperature coefficient is only slightly negative at the beginning of the cycle, and thus the two situations are not vastly different.)

There is also a timing window effect due to the xenon transient, as is shown in Figure 5 (from the NRC training manual for PWR plants). If the core is operating at full power and has achieved an

equilibrium xenon concentration, the xenon concentration will increase and insert still more negative reactivity after the reactor shuts down. For a shutdown from full power, the negative reactivity peaks about eight hours after shutdown, returns to the equilibrium value after approximately one day, and then continues to decrease, which implies that still more shutdown reactivity is needed to keep the core in a subcritical condition. It was assumed that the operators will have the plant stabilized by the time a full day has gone by, and thus the effects of the xenon "tail" were not considered here.

It should be noted that, for the first few hours after reactor trip, if natural circulation or pump restart occurs later in time, the likelihood of a recriticality is less, because of the xenon transient. The excess reactivity at the very beginning of the cycle is sufficient to overcome the xenon overshoot even at its peak, but the xenon effect might prevent a criticality if the boron dilution event occurred after an hour or so and if the event occurred a little later in the fuel cycle.

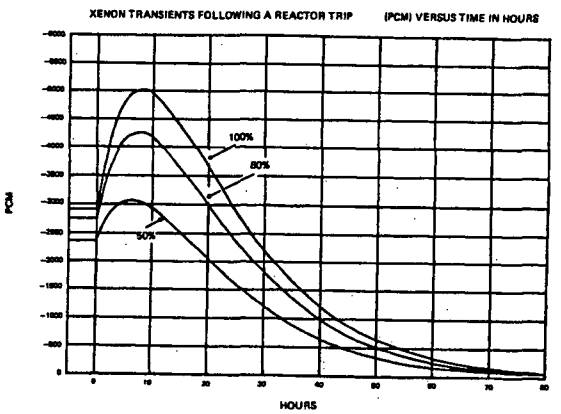

Figure 5: Typical Xenon Transients

The boron curve was digitized and the excess reactivity compared with the various deficits. Of the 310 days in the fuel cycle, criticality is possible with all rods in for approximately the first 20 days. The probabilities of the various branches were as follows:

	Probability of Prompt Criticality	Probability of Overpower	Probability of Criticality, Low Power	Probability of No Criticality
Slow reactivity insertion	2/310 (0.6%)	13/310 (4.2%)	5/310 (1.6%)	290/310 (93.6%)
Fast reactivity insertion	4/310 (1.3%)	11/310 (3.5%)	5/310 (1.6%)	290/310 (93.6%)

In summary, after the first four days of the fuel cycle, a reactivity excursion is no longer possible and, after 15 days, significant core damage is no longer possible. These figures can vary somewhat from plant to plant and cycle to cycle, however.

Results: The results of the event tree calculation for this B&W design were a CDF of 5.7×10^{-6} event/RY, of which 9×10^{-7} event/RY involved a reactivity excursion.

The highest frequency scenario corresponded to Sequences 8 and 9 on the event tree. The scenario is initiated by a small-break LOCA, all three HPI trains operate, but flow is not sufficient to maintain natural circulation. The RCPs are not restarted, but natural circulation re-starts after the steam generators fill with deborated coolant. The frequency of a reactivity excursion is 2×10^{-7} /RY and the frequency of severe core damage is an additional 4×10^{-6}/RY.

The second highest frequency scenario, corresponding to Sequences 4 and 5, is similar, but instead of recovering natural circulation, the RCPs are restarted. The total frequency is 10^{-6}/RY, which includes a frequency of excursion of 3×10^{-7}/RY.

The third highest frequency scenario, Sequences 14 and 15, starts with a small-break LOCA, but one train of HPI fails. Natural circulation is lost, the steam generators fill with deborated coolant, and then the inoperable HPI train is recovered. The frequency of this scenario is 10^{-7}/RY which includes a frequency of excursion of 2×10^{-8}/RY.

Description of Sequence (W design): The W design differs significantly from the B&W design and the thermal-hydraulic effects can be affected. The design is shown in Figures 6 and 7 of NUREG/CR-5640.[1759]

First, the steam generators are of the U-tube design and these tubes are completely submerged in liquid water on the secondary side. After a small LOCA, as coolant is lost out of the break, the pressurizer will empty, pressure will drop, and voids will form in the core area.

Unlike the situation in the B&W design where the voids will naturally collect and form a vapor space at the top of the hot leg, voids will be carried into the ascending half of the U-tubes and condense back into the liquid phase. As pressure and coolant inventory continue to drop, a greater fraction of the volume above the core and in the hot legs will be in the vapor phase. It is likely that re-condensed (and deborated) coolant will first flow back down the ascending half of the U-tubes and run down on the lower surfaces of the pipes back down to the upper plenum of the reactor, where it will mix rapidly with the more concentrated, turbulently boiling coolant just above the core. As more inventory is lost, eventually a state will be reached where the primary system is at saturation pressure, coolant in the vapor phase condenses in the steam generators, and at least some of the condensed, deborated coolant collects in the descending half of the U-tubes, and the outlet plena, cold legs, pump volume, and, eventually, the lower plenum of the reactor vessel.

Second, unlike the B&W "lowered loop" design, the steam generators are located at a higher elevation than the top of the reactor core. In this design, as the coolant level in the primary system drops, it will be more difficult for deborated coolant to remain in the steam generators. In contrast to this, in the B&W lowered loop design, the coolant level can drop to the top of the active core, and there will still be some deborated coolant in the steam generators.

Third, the available volume in the steam generators is somewhat less. The total volume of coolant in the reactor vessel is 4333 cubic feet (from the RELAP model for this plant), while the primary side of a "Model F" steam generator is 962 cubic feet.[1759] The total primary volume of the four steam generators is thus about 90% of the reactor volume. However, because of the U-tube design of the steam generators, it was not clear that the entire primary volume of the steam generators will fill with deborated coolant. If only the descending portion of the tubes are filled, the total liquid inventory in the steam generators will be only 45% of the reactor volume. It was not clear that, should natural circulation be restored, the core area will be flooded temporarily with deborated coolant. Conversely, the reactor downcomer and lower plenum volumes may slowly fill with unmixed, deborated coolant, as was discussed earlier, and this would be a sufficient volume to sweep the dissolved boron out of the core region. Thus, for this design, there was even more uncertainty regarding the credibility of this scenario than in the B&W example discussed previously. However, some experimental work at a test facility at the University of Maryland strongly suggested that the deborated coolant will sweep through the primary system as a "slug" with relatively little mixing. Again, assuming the "worst case" scenario, it was assumed that the accumulation of deborated coolant will occur.

Event Tree: The event tree structure is essentially unchanged, but the values of certain split fractions must be changed because of the differences in the various systems. The Seabrook plant

was chosen for analysis, again because of the ready availability of design information and the existence of a RELAP model.

Small Break LOCA: As before, the NUREG-1150[1081] S2 frequency of 10^{-3}/RY was used.

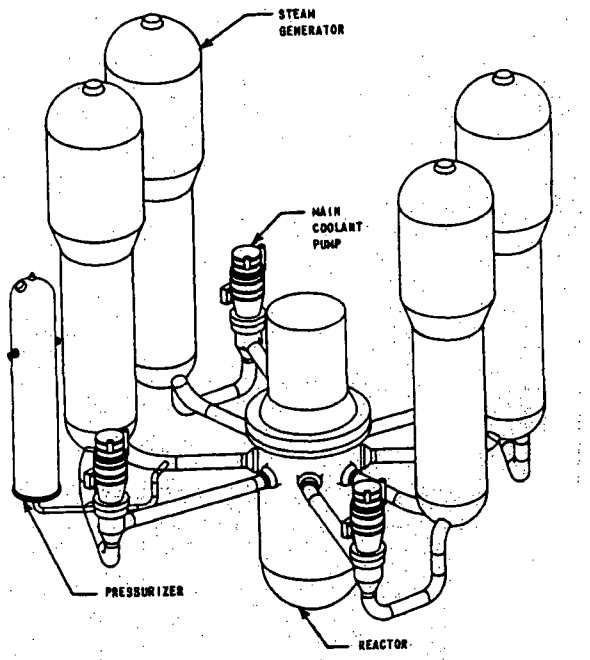

Figure 6: Westinghouse NSSS

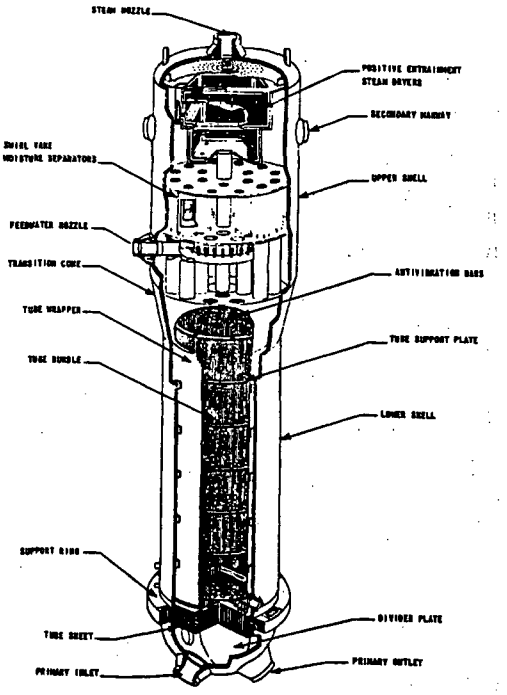

Figure 7: U-Tube Steam Generator

Probability of Maintaining Natural Circulation: Seabrook is equipped with three charging pumps, two of which are centrifugal, and one of which is a positive displacement pump.[1759] In addition, the plant is equipped with a two-train high-pressure safety injection (HPSI) system. The two HPSI pumps are centrifugal pumps, but have a shutoff head close to the saturation pressure of the primary system; they cannot inject at operating pressure. Pump capacities are given in the following table:

Pump Type	Flow at 1750 psi[1759]	Flow at PORV Setpoint[1759]
Charging, Centrifugal (2)	(unknown)	150 gpm (each)
Charging, Positive Displacement	98 gpm	98 gpm
HPSI, Centrifugal (2)	425 gpm (each)	zero

The positive displacement pump was neglected because of its low capacity. The flow near saturation pressure for the two centrifugal charging pumps was not given in NUREG/CR-5640.[1759] However, the SPAR-2QA model event tree for small-break LOCA has, as success criteria, <u>either</u> of the two HPSI pumps, or <u>both</u> of the two centrifugal charging pumps. Thus, the two charging pumps were treated together as if they were a third HPSI train with a combined flow of 425 gpm. Split fractions were calculated using the same assumptions as before and the results were as follows:

Number of Pumps	Flow at 1750 psi	Fraction of 100 to 1500 gpm "G3" Spectrum Covered	Probability of Loss of Natural Circulation
1	425 gpm	23.2%	76%
2	850 gpm	53.6%	46%
3	1275 gpm	83.9%	16%

Number of HPSI "Trains:" The SPAR-2QA model's HPSI fault tree for this plant was much more tractable than that of the B&W plant. From the SPAR-2QA model for this plant, calculations of the three total system and the individual trains gave the following results:

Probability of Failure of:	Parameters in SPAR-2QA Model[1761]M	Value
Entire HPSI System, including Charging Pumps	HPI	1.096E-5
Two Centrifugal Charging Pump Trains	CHV-SYS-F	8.77E-3
Both HPSI Trains (including Common Cause Failures)	HPI-TRAINS-F	1.624E-5
One HPSI Train	HPI-TRAINA-F or HPI-TRAINB-F	4.030E-3

Again, the numbers above did not have four significant figure accuracy. The extra digits were given for the convenience of the reader who wishes to repeat the calculation. The probability of a certain number of trains operating, P(n), was then calculated as follows:

Probability of n Trains Operating	Parameters in SPAR-2QA Model[1761]		Value
P(0)	HPI		1.096E-5
P(1)	(HPI-TRAINS-F)(1-CHV-SYS-F) + [(HPI-TRAINA-F)(CHV-SYS-F)](1-HPI-TRAINB-F) + [(HPI-TRAINB-F)(CHV-SYS-F)](1-HPI-TRAINA-F)	1.61E-5 + 3.52E-5 + 3.52E-5	8.65E-5
P(2)	HPI-TRAINA-F + HPI-TRAINB-F + CHV-SYS-F	4.03E-3 + 4.03E-3 + 8.77E-3	1.683E-2
P(3)	1 - P(0) - P(1) - P(2)		0.983

Recover HPSI: Using the Seabrook SPAR-2QA model, the parameter designated "SLOCA-XHE-NOREC" indicated a 43% probability of non-recovery which implied a recovery probability of 57%.

Restart RCPs: As in the B&W case, a probability of 10% was used, based purely on judgment.

Recover Natural Circulation: As in the B&W case, the operator may be able to recover natural circulation by isolating the break, using the positive displacement charging pump, or blowing down a steam generator. Based on judgment, 50% was again used for this parameter.

Core State: The boron letdown curve for the Seabrook core (fairly typical of a W "low leakage" design, and plotted versus burnup in megawatt-days per metric ton of uranium instead of days in the cycle) is shown in Figure 8 (from the Seabrook updated FSAR). As can be seen by comparing this curve with the B&W curve shown earlier, there are some marked differences. First, it should be noted that the licensee did not include the xenon and samarium build-in at the very beginning of the cycle, and thus the curve does not begin at zero burnup. Second, the full power boron concentration actually increases slightly at the beginning of the cycle, then decreases slowly, eventually becoming linear for the latter portion of the cycle until it becomes zero at the end of the cycle (17 GWD/MTU). This is due to the burnable poison loading, which is typically higher in W cores.

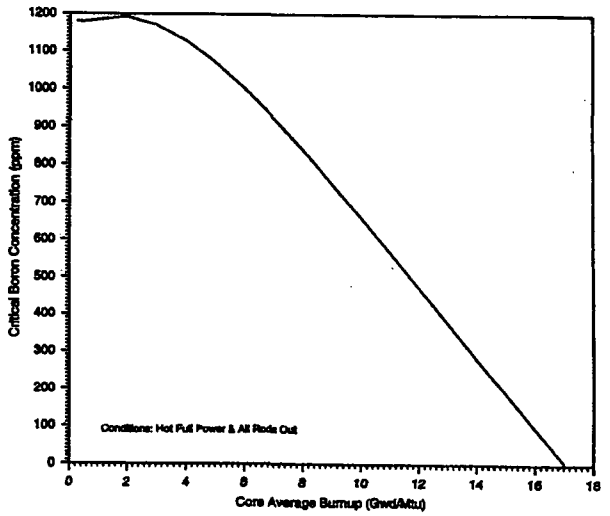

Figure 8: Westinghouse Boron Letdown

This curve was digitized and combined with other information in the Seabrook FSAR to produce a plot of boron worth and control rod worth over the cycle (with the xenon buildup added at the beginning of the cycle. For this core design, it is possible to achieve criticality for about 36% of the cycle, almost five times the 7.7% figure for the B&W core.

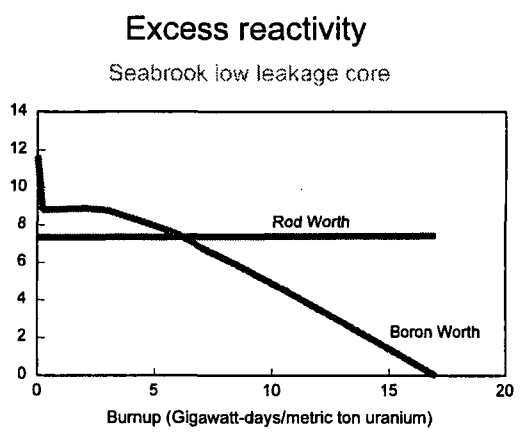

Figure 9: Excess Reactivity vs. Burnup

As before, criticality does not automatically equate to severe core damage. The Seabrook plant is equipped with two AFW trains, one motor-driven and one turbine-driven, each capable of supplying 710 gpm at a secondary side pressure of 1322 psi.[1759] This is somewhat less than the capacity of the Crystal River plant's AFW, and the rated thermal power of the Seabrook reactor core is actually greater than that of Crystal River. A rough calculation similar to the one done for the B&W design indicates that the AFW supply is capable of removing about 4.8% of rated thermal power per AFW train. If both trains are operating, allowing 2% of rated power for decay heat removal, and assuming the fission heat pulses with a 50% duty cycle, the AFW system can accommodate fission power of about 15% of rated - significantly less than that of the B&W design. However, unlike the B&W design, the W steam generators are likely to contain a significant inventory of secondary coolant, completely submerging the tubes on the secondary side, and are far less likely to dry out before the power pulses in the primary side die out due to boron mixing in the primary. There was no easy way to estimate this effect quantitatively. However, the probability of damage was not a very strong function of the power level assumed to be the threshold of severe fuel damage. Using the digitized curves, the following estimates were made:

Fuel Damage Assumption	Percentage of Fuel Cycle
Fuel melts at criticality	36%
Fuel melts at AFW limit (15% power)	33%
Fuel melts at 50% power	25%
Fuel melts at 100% power	15%

It was difficult to believe that a 100% power pulse would not result in damage. It was even more difficult to believe that a subcritical core would sustain any damage. The extreme range in damage threshold only leads to a range of 15% to 36% in the probability of severe core damage, given a boron dilution event. It was assumed, based purely on judgment, that severe core damage will result at 50% of rated power.

Regarding prompt criticality, a calculation indicated this to be possible only during the time of xenon buildup - about 1% of the fuel cycle. Once equilibrium is achieved, the burnable poison loading is such that the excess reactivity curve is relatively flat and does not rise sufficiently above the shutdown rod worth to permit a prompt criticality event. The digitized boron curve was used to calculate the probabilities of the various branches:

Sequence	Probability of Prompt Criticality	Probability of Overpower	Probability of Criticality, Low Power	Probability of No Criticality
Slow reactivity insertion	1%	24%	11%	64%
Fast reactivity insertion	1%	24%	11%	64%

Results: The results of the event tree calculation for this W design were a CDF of 2.2×10^{-5} event/RY, of which 10^{-6} event/RY involved a reactivity excursion.

As in the B&W case, the highest frequency scenario corresponded to Sequences 8 and 9 on the event tree. This scenario is initiated by a small break LOCA, all HPSI trains operate, but flow is not sufficient to maintain natural circulation. The RCPs are not restarted, but natural circulation restarts after the steam generators fill with deborated coolant. The frequency of a reactivity excursion was 7×10^{-7}/RY and the frequency of severe core damage was an additional 2×10^{-5}/RY.

The second highest frequency scenario, which corresponds to Sequences 4 and 5, is similar but instead of recovering natural circulation, the RCPs are restarted. The total frequency was 4×10^{-6} /RY which includes a frequency of excursion of 2×10^{-7}/RY.

The third highest frequency scenario, corresponding to Sequences 14 and 15, starts with a small-break LOCA but one train of HPSI fails. Natural circulation is lost, the steam generators fill with deborated coolant and then the inoperable HPSI train is recovered. The frequency of this scenario was 10^{-6}/RY, which included a frequency of excursion of 4×10^{-8}/RY.

Discussion: The CDF results were quite similar for both designs. This was not too surprising as the same event tree was used for both, and many of the split fractions were the same. Results for 2-loop or 3-loop W designs, or a CE design, were not likely to be greatly different. The W CDFs were

about a factor of four higher than that estimated for the B&W design. This appeared to be primarily due to the higher burnable poison loading in the W core which causes the core to have a potential for criticality for almost five times as long a fraction of the fuel cycle. There was, however, somewhat less uncertainty in the thermal-hydraulic effects in the B&W design.

The nature of the highest frequency scenarios suggest that a procedural fix may be appropriate for this issue. All three scenarios involve natural circulation restarting due to actions taken by the operators, restarting the RCPs, or recovering a train of high pressure injection.

Consequence Estimate

To estimate consequences and risk, the standard analysis described in the Introduction to NUREG-0933 was used, i.e, the WASH-1400[16] Release Categories and a generic site. For the portion of the CDF associated with overpower damage to the fuel, the spectrum of consequences across the seven PWR Release Categories for the S2 LOCA in WASH-1400[16] was re-normalized to this issue's CDF. For the reactivity excursions, the entire event frequency was put into the PWR-1 release category, consistent with the worst case assumption discussed earlier. The results are shown in Table 3.185-1 below.

Table 3.185-1

Release Category	1	2	3	4	5	6	7	Total
WASH-1400 Spectrum of Release Categories[16]								
WASH-1400 S2 Frequencies	1.0e-07	3.0e-07	3.0e-06	3.0e-07	3.0e-07	2.0e-06	2.0e-05	2.6e-05
WASH-1400 Normalized Frequencies	0.38%	1.15%	11.54%	1.15%	1.15%	7.69%	76.92%	100.00%
Westinghouse Design								
Frequencies, Overpower Sequences	8.1e-08	9.3e-10	9.3e-09	9.3e-10	9.3e-10	6.2e-09	6.2e-08	1.6e-07
Excursion Event Frequency	1.0e-06							1.0e-06
Sum	1.1e-06	9.3e-10	9.3e-09	9.3e-10	9.3e-10	6.2e-09	6.2e-08	1.2e-06
Release Category Consequences (man-rem)	5.4e+06	4.8e+06	5.4e+06	2.7e+06	1.0e+06	1.5e+05	2.3e+03	
Risk (man-rem/RY)	5.8e+00	4.5e-03	5.0e-02	2.5e-03	9.3e-04	9.3e-04	1.4e-04	5.9e+00
B&W Design								
Frequencies, Overpower Sequences	1.8e-08	2.1e-10	2.1e-09	2.1e-10	2.1e-10	1.4e-09	1.4e-08	3.6e-08
Excursion Event Frequency	??							0.0e+00
Sum	1.8e-08	2.1e-10	2.1e-09	2.1e-10	2.1e-10	1.4e-09	1.4e-08	3.6e-08
Release Category Consequences (man-rem)	5.4e+06	4.8e+06	5.4e+06	2.7e+06	1.0e+06	1.5e+05	2.3e+03	
Risk (man-rem/RY)	9.7e-02	1.0e-03	1.1e-02	5.6e-04	2.1e-04	2.1e-04	3.2e-05	1.1e-01

The net risk associated with this issue was thus estimated to be 8.5 man-rem/RY for the B&W design, and 21 man-rem/RY for the W and CE designs. In January 2000, the net benefit of this issue was estimated as follows:

Reactor Design	Number of Plants	Remaining Aggregate Life (RY)	Man-rem/RY	Risk benefit (man-rem)
B&W	10	190	8.5	1,615
Westinghouse	54	1100	21	23,100
CE	15	300	21	6,300
			Total:	31,015

The total risk benefit was estimated to be 31,000 man-rem, excluding the effect of license renewal which would increase the number significantly.

Cost Estimate

Industry Cost: The cost to a licensee would be the cost of writing and putting in place a complex change in emergency procedures. According to Table 4.1 of NUREG/CR-4627,[961] such a change would cost $3,420 to $4,350, with a point estimate of $3,900. This complex procedure may well be an above-average cost and, therefore, the upper limit of $4,350 was used. For approximately 80 PWRs, the total licensee cost was $348,000.

NRC Cost: The cost to the NRC would be significant, since considerable work would need to be done to resolve the thermal-hydraulic uncertainties, plus all of the administrative effort involved in any type of regulatory action. Based purely on judgment, a cost of $2M was assumed.

Total Cost: The total industry and NRC cost for the possible solution was estimated to be approximately $2.4M and was dominated by the cost of confirmatory thermal-hydraulic research.

Impact/Value Assessment

Based on a potential public risk reduction of 31,000 man-rem and cost of $2.4M for a possible solution, the impact/value score was estimated to be $80/man-rem.

Other Considerations

(1) Because the contemplated fix would be procedural in nature, there were no implications for increased ORE to plant workers.

(2) Because the issue was well into the cost-beneficial range, avoided offsite costs of a potential accident were not estimated; inclusion of these costs would not change the conclusion.

(3) License Renewal: Assuming a license renewal period for 79 plants, the public risk reduction would be approximately doubled, to 60,000 man-rem.

Uncertainties

The calculations presented above were point estimates only. The Rev. 2 QA SPAR models from which many of the parameters were taken did not include uncertainty distributions. Moreover, some of the parameters were based only on judgment. Thus, a standard PRA uncertainty analysis was not feasible. Nevertheless, there were several limitations in the analysis:

- The estimates of the fraction of the fuel cycle during which the core can be brought to a critical state with all control rods inserted were based on calculations performed on FSAR data. These calculations were very primitive, core nuclear design parameters may differ for each fuel cycle, and the two estimates of this fraction, 7.7% for the B&W core and 36% for the W core, can vary. However, it is doubtful that these fractions will vary by orders of magnitude, which would be necessary to change the conclusion.

- The xenon reactivity transient was included only as a window effect. In reality, the xenon transient will become steadily more important as core burnup increases, and the "window" of time after shutdown during which it is possible to achieve criticality will steadily decrease.

- Conversely, the fact that the xenon will eventually decay away has not been included. The assumption was made that, by the time the xenon transient turned around, the operators would have taken appropriate corrective action. This "delayed criticality" effect is, in reality, still another accident scenario which should be incorporated into the resolution of this issue.

- The options available to the operator to refill the primary system (and thereby recover natural circulation) are plant-specific. In the particular case of Crystal River, it was assumed that all three HPI trains will be started to mitigate the loss of coolant. However, only two trains start automatically on an SI signal. If the operator manually starts the third train at the beginning of the accident sequence, this will be a good approximation. However, if the operator delays starting the manual train, and then starts the third train after observing that the automatically-initiated trains have either failed or are not sufficient to maintain primary coolant inventory, this late start will actually increase the likelihood of a return to criticality.

- The core power level associated with the onset of severe fuel damage was, at best, an educated guess. If there is any high burnup fuel in the core, severe damage might occur as a result of even a relatively mild reactivity excursion. Conversely, the steam generators are sized to accommodate full power operation and should be able to remove the integrated energy of a significant power pulse, limited primarily by the capacity of the AFW system and the capacity of the secondary side safety valves and ADVs.

- The actions of the operators were worthy of much more study, given the time windows involved in these scenarios and the lack of information on core reactivity. The plant operators would be faced with some confusing decisions about whether to restore failed trains, initiate forced circulation, etc.

- The thermal-hydraulic phenomena needed further investigation. Although the estimate for this study was $2M (roughly 10 staff-years), the investigation would be cost-effective even if this expense were much higher.

It should also be noted that, in its evaluation of the B&WOG PRA, NRR believed that the deborated water accumulation modeling, transport modeling, and reactivity analyses were highly approximate,

incompletely understood, and subject to large uncertainties. Although the staff recognized these shortcomings, it expanded the B&WOG PRA to include approximations of additional variables and concluded that the fuel damage probability for natural circulation restart was probably between approximately 10^{-7}/RY and 10^{-5}/RY.[1730] This was completely independent of the analysis presented here, but nevertheless yielded similar results.

CONCLUSION

The CDF change associated with the issue was estimated to be 2.2 x 10^{-5} event/RY and the cost/benefit ratio was approximately $80/man-rem for W and CE plants. This class of PWRs dominated primarily because of a higher burnable poison loading and, consequently, a longer fraction of the fuel cycle in which recriticality is possible. The cost/benefit ratio was particularly favorable because the cost was low and was likely to be dominated by NRC research costs. Based on the cost/benefit criteria (shown in Figure 1 of the Introduction to NUREG-0933), the issue was assigned a high priority ranking. A technical assessment was performed, and the issue was closed with no changes to existing regulations or guidance.[1869]

REFERENCES

16. WASH-1400 (NUREG-75/014), "Reactor Safety Study, An Assessment of Accident Risks in U.S. Commercial Nuclear Power Plants," U.S. Atomic Energy Commission, October 1975.

961. NUREG/CR-4627, "Generic Cost Estimates, Abstracts from Generic Studies for Use in Preparing Regulatory Impact Analyses," (Rev. 1) February, 1989.

1081. NUREG-1150, "Severe Accident Risks: An Assessment for Five U. S. Nuclear Power Plants," December 1990.

1728. Letter to J. Birmingham, et al., (NRC) from W. Foster (The B&W Owners Group), "Submittal of B&WOG Report, 'Evaluation of Potential Boron Dilution following Small Break Loss of Coolant Accident,' 77-5002260-00, September 1998," September 11, 1998

1729. Letter to W. Lyon (NRC) from J. Link (The B&W Owners Group), "Transmittal of Report 'Status Report on Return to Criticality Following Small Break Loss of Coolant Accident,' June 1998, Document No. 47-5001848-00," June 15, 1998

1730. Memorandum to A. Thadani from S. Collins, "Potential Need to Reprioritize/Reopen Aspects of Generic Safety Issue (GSI) 22 Pertaining to Boron Dilution Following Loss-of-Coolant Accidents," February 1, 1999.

1759. NUREG/CR-5640, "Overview and Comparison of U.S. Commercial Nuclear Power Plants: Nuclear Power Plant System Sourcebook," September 1990.

1760. NUREG/CR-5750, "Rates of Initiating Events at U.S. Nuclear Power Plants: 1987 - 1995," February 1999.

1869. Memorandum to L. Reyes from C. Paperiello, "Closure of Generic Safety Issue 185, 'Control of Recriticality Following Small-Break LOCAs in PWRs,'" September 23, 2005.

ISSUE 188: STEAM GENERATOR TUBE LEAKS OR RUPTURES, CONCURRENT WITH CONTAINMENT BYPASS FROM MAIN STEAM LINE OR FEEDWATER LINE BREACHES

DESCRIPTION

Historical Background

This issue was identified when it was believed[1799] that the validity of steam generator (SG) tube leak and rupture analyses could be affected by resonance vibrations in steam generator tubes during steam line break depressurization. The concern is that an unisolable secondary system opening outside containment coupled with multiple steam generator tube leaks or ruptures could result in releases in excess of 10 CFR Part 100. The related technical issues include the ability to correctly predict SG secondary side thermal-hydraulic behavior, physical loadings, component response, resonance vibrations within the tube bundles, eddy current testing, iodine spiking, operator response, and risk. The issue is related to Issue163, "Multiple Steam Generator Tube Leakage."

Safety Significance

The issue raised the following two potentially risk-significant events that are not fully addressed as design basis accidents in FSARs, industry analyses, the SRP,[11] or staff reviews:

(1) Operating experience and design information suggested that the potential existed for a line breach to significantly increase SG leakage, because resonant vibration of SG tubes from a secondary side blowdown could cause increased tube leakage.

(2) Significant SG tube leakage could lead to secondary system breaches from a variety of causes. The resulting SG secondary side blowdown could further increase tube leakage due to resonance vibration within the affected SG tube bundle.

Such leakages, concurrent with containment bypass, might cause offsite radiation doses in excess of 10 CFR Part 100.

Main steam line break and steam generator tube rupture (SGTR) are both included as design basis accidents in Chapter 15 of most FSARs and the SRP,[11] and are addressed as accident initiators in most plant-specific PRAs. However, these accident initiators are generally assumed to occur independently unless there is severe core damage. Moreover, a SGTR is assumed to occur spontaneously in just one tube. This issue addresses the possibility of a causal relationship: a main steam or feedwater line break in an unisolable portion of the secondary system is postulated to cause a number of SG tubes to leak or rupture. Conversely, significant SG tube leakage or rupture is postulated to cause an unisolable secondary side breach which then may exacerbate the leakage.

Consequences of such an accident scenario are significant because primary coolant could be lost to the environment through the leaking or ruptured SG tubes and out the break in the secondary system. Given that the secondary side opening is outside containment but not isolable, the release

of radioactivity could be above 10 CFR Part 100 limits, depending upon the iodine spiking factor and the duration of blowdown. Further, the escaping coolant will not be returned to the containment sump. There is a high probability that the ECCS will successfully mitigate a LOCA during the injection phase. However, when the refueling water storage tank (RWST) is depleted, it may not be possible to use the recirculation mode, possibly resulting in core damage. Because the release path is open to the environment outside of the containment, the release of radioactivity from the postulated core damage event could have significant risk impacts.

The issue also includes the safety concerns of increased risk from degraded operator performance because of environmental conditions that can occur during the event. Eddy current testing and iodine spiking issues were not originally identified but were included in this evaluation to provide more complete bases for understanding the safety concerns.

PRIORITY DETERMINATION

The accident scenario of concern consists of two events: (1) a non-isolable secondary system break or rupture that is outside containment; and (2) a coupling of this break with the rupture of, or significantly increased leakage from, affected SG tubes.

Non-Isolable Main Steam Line Break Outside Containment: Main steam line breaks (or equivalent ruptures in attached piping or equipment) may be caused by a combination of stresses from restriction of pipe thermal expansion by pipe supports, weld defects, lack of pipe stress relief, age-related erosion/corrosion, vibration-induced cyclic fatigue, or repeated safety valve operation causing fatigue cycles to the piping and tubes and increasing the likelihood of a safety valve sticking open. Relatively large steam line breaks have occurred outside the containment, upstream of the MSIV, during hot functional testing at Robinson 2 and Turkey Point 3. These resulted in collateral valve, piping, and equipment damage; blowdown of the affected SGs; and excessive cooldown of the RCS. In addition, large amplitude vibrations of components and structures, water hammers, and sonic booms that affected operator communication and actions were observed. The Turkey Point 3 event involved SG re-pressurization shortly after the initial blowdown as a result of collateral damage.

Other Secondary System Breaks: It is also possible to initiate the accident scenario of interest with breaks in other parts of the secondary system such as a main feedwater line, steam line supplying steam-driven auxiliary feedwater, or other steam supply lines. These would be considered within the scope of this generic issue. Main and auxiliary feedwater systems generally have check valves located inside containment, which may also fail during the event. Steam supply lines other than main steam will have their own isolation valves, and because of their smaller diameter, rupture of these lines may not cause as severe a blowdown transient. However, a smaller opening may create resonance vibrations in the affected SG that would continue for a longer period of time.

Steam Generator Tube Cracks and Test Data: PWR SG tube cracks are caused by such common-mode failure mechanisms as outside diameter stress corrosion cracking, primary water stress corrosion cracking, fretting and wear, high cycle fatigue cracking, denting, pitting, and wastage. Plant TS require that a 3% sample of SG tubes undergo NDE periodically. The percentage of tubes inspected increases as more indications are found. Existing regulatory guidance would require tubes with greater than 40% through-wall cracks to be repaired or plugged.

Eddy current testing has a variable probability of detection that depends on: the type of probe; crack width, depth, length, and orientation; background interference; and human error. While crack

depth and length are the most important factors in determining SG tube integrity, accurate crack sizing by non-destructive means (eddy current, ultrasonics, etc.) remains challenging. Therefore, operation will likely occur with some degree of tube degradation at all times.

The NRC has approved several alternate repair criteria allowing small cracks to remain in service under certain conditions. Under the alternate repair criteria in Generic Letter 95-05[1804] for outside diameter stress corrosion cracks in intersections between tubes and tube support plates (TSPs), the industry must leak and burst test tube samples. However, the tubes are rigidly held in place during testing to avoid bending that would increase crack size. Tubes are tested under static conditions not subject to vibration and TSP movement that could be encountered during a main steam line break from differential pressure loadings and from vibrations at their lowest natural frequencies. Leak tests are not required to be performed at operating temperatures.

Resonance Vibrations: Resonance vibrations caused by a line break may develop in the SG internals through pressure pulses in the two-phase fluid and from pipe movement. Free span sections of tubes, portions of TSPs, and the U-tube assembly would vibrate from excitation frequencies emanating from the break. The tube/TSP movement from pressure pulses, resonance vibration, and potential steam chugging from possible recriticalities could destroy links between existing micro and macro cracks in SG tubes. Further, there has not been an integrated study of actual damage done to adjacent SG tubes following SGTRs, from steam line breaks, or from SG dry outs.

Neither resonance vibrations nor cross-flow forces can be calculated by the one-dimensional, RELAP thermal-hydraulic code. EPRI has developed multi-dimensional two-phase flow codes that are applicable only to steady-state conditions. The ACRS Ad Hoc DPO Subcommittee on SG integrity issues concluded[1800] that:

> "*... thermal-hydraulic codes usually employed by the staff for safety analyses are poorly suited to address the issues raised by this contention. The Subcommittee urges that investigation of this issue be completed expeditiously.*" (p. 10)

NRR's reviews in this area were consistent with the ACRS conclusion, since NRR has not relied upon licensee justifications based on such codes for SG secondary side analyses.

Tube Sheet Cladding Separation: Tube sheet cladding separation by the flow divider and cracks in first row tube welds and cladding may have occurred due to excessive primary-to-secondary tube sheet differential pressures during the primary system hydro at Robinson 2. The differential pressure across the tube sheet at Turkey Point 3 during its cold hydro was what could be expected from high head safety injection during main steam line break or stuck-open safety or atmospheric dump valve events, but this also caused cladding separation. Tube, tube sheet, and cladding stresses due to differential primary-to-secondary pressure and vibrations have not been modeled in an integrated risk assessment of a main steam line break.

Analysis and Understanding: The Ad Hoc DPO Subcommittee recommended[1800] that:

> "*Risk analyses that the staff considers need to account for progression of damage to steam generator tubes in a more rigorous way.*" They "*... found that the staff did not have a technically defensible understanding of these processes to assess adequately the potential for progression of damage to steam generator tubes. Bending and flexion of the tubes produce conditions regarding crack growth, tube*

leakage, and tube burst outside the range of analyses and experiments done by the staff." (p. 46) They concluded that the contention, "*Depressurization of the reactor coolant system during a main steam line break will produce shock waves and violent, sympathetic vibrations that will cause cracks to form, to grow and to unplug, leading to much higher leakage from the primary-to-secondary sides of the reactor coolant system than has been considered by the NRC staff... has merit and deserves investigation.*" (p. 10) The Subcommittee concluded that "*... there is an imperative for the staff to act expeditiously to develop a much better understanding of the dynamic processes associated with depressurization and how the processes could lead to damage progression.*" (p. 46) "*Similarly, the Ad Hoc Subcommittee did not feel that the staff had developed an adequate understanding of how movement of the tube support plates during an event could damage the tubes and augment leakage from the primary side to the secondary side of the reactor coolant system. The staff needs to develop an understanding of how tube support plate movement could lead to unplugging of cracks occluded by corrosion products in the annular space between the tube support plate and the tubes.*" (p. 46) Also, "*... the Ad Hoc Subcommittee has concluded that the staff has not adopted a technically defensible position on the choice of the iodine spiking factor to be used in the analysis of design basis accidents for compliance with the requirements of 10 CFR Part 100 or General Design Criterion (GDC) 19.*" (p. 48)

Operator Actions: The NRC has used estimates as low as 10^{-3} as the probability of the failure to depressurize and cool down the RCS in risk analyses of these containment bypass scenarios. The human error contribution to the estimated increment to core damage frequencies per year in these scenarios ranged from 29% to 93%. Operators have to identify the ruptured SG in order to isolate it, while primary and secondary temperature and pressure changes mask the diagnostic evidence they need to do so. There have been 10 SGTRs (or significant leaks) in U.S. PWRs from 1975 to 2000. Human performance weaknesses, such as mis-diagnoses, substantial delays in isolating the faulted steam generator, and delayed initiation of the residual heat removal system, have been identified in these events.[1801, 1802] The events also involved unnecessary radiation releases, lack of RCS subcooled margin, excessive RCS cooldown rates, and overfilling the SG because of human or procedural problems.

The probability value can be significantly higher than 10^{-3} when performance shaping factors are incorporated for SGTRs concurrent with containment bypass based on operator performance as well as simulator experience. While one risk analysis that addressed a stuck open relief valve has a success path involving gagging the valve, this may be unrealistic given potential galling of the internals, steam release at the valve location, and the high radiation field at the valve created by a large tube leak. Additional complications would add to operator burdens. These include high noise levels preventing normal communications; RCS cooldown with potential recriticality; actions to recover RWST inventory; many radiation alarms, unexpected high radiation areas in the turbine building, and atmospheric releases; fire alarms and fires from steam and shrapnel from the break; and emergency communications with local, state, and Federal governments diverting operations personnel before the technical support center is manned or additional operations personnel arrive on site. The Halden Control Room Staffing study found poor operator performance in one of two simulations of a SG leak with a failed open SG safety relief valve, as well as simulations where crew size was decreased to attend to other duties.[1803] A model exists based on this simulation, but it has not been used in a sensitivity study to more accurately predict a probability of failure to depressurize and cool down the RCS under these circumstances.

The Ad Hoc DPO Subcommittee concluded[1800] that:

> "... *the [human performance] failure probabilities can rise from 10^{-3} to ~1, depending on the number of failed steam generator tubes.*" They also said that "*Risk evaluations should also include examination of the mechanisms for damage progression, which has not been observed in steam generator tube rupture accidents to date, but may occur as a result of dynamic processes during main steamline break depressurizations of the reactor coolant system. The effects of the dynamic events on operator performance both with respect to the time available for required responses and the level of operator distraction need to be evaluated.*" (p. 20) "*In all cases, the staff needs to develop defensible analyses of the uncertainties in its risk assessments, including uncertainties in its assessments of human error probabilities. As the staff develops a better understanding of the dynamic processes associated with depressurization during a main steamline break, it may want to revisit estimates of operator error probability in light of the considerable operator distraction that might occur during such events.*" (p. 47)

CONCLUSION

The staff found that the accident scenarios were credible, and that the issue could not be addressed by the enforcement of existing regulations. Therefore, it was concluded that a technical assessment should be performed on the issue, in accordance with NRC Management Directive 6.4. Following the technical assessment, the issue was closed with no changes to existing regulations or guidance.[1870] In a followup review, the ACRS agreed with this conclusion.[1871]

REFERENCES

11. NUREG-0800, "Standard Review Plan for the Review of Safety Analysis Reports for Nuclear Power Plants," U.S. Nuclear Regulatory Commission, (1st Edition) November 1975, (2nd Edition) March 1980, (3rd Edition) July 1981.

1799. Memorandum for A. Thadani from J. Wiggins, "Staff Member Concern Regarding the Potential for Resonance Vibrations of Steam Generator Tubes During a Main Steam Line Break Event," June 27, 2000.

1800. Letter to W. Travers from D. Powers, "Differing Professional Opinion on Steam Generator Tube Integrity," February 1, 2001.

1801. Letter to W. F. Conway, (Arizona Public Service Company) from J. B. Martin (NRC), "NRC Inspection Report 50-529/93-14," April 16, 1993.

1802. Letter to A. A. Blind, (Consolidated Edison Company of New York, Inc.) from H. J. Miller (NRC), "NRC Augmented Inspection Team - Steam Generator Tube Failure - Report No. 05000247/2000-002," April 28, 2000.

1803. NUREG/IA-0137, "A Study of Control Room Staffing Levels for Advanced Reactors," U.S. Nuclear Regulatory Commission, November 2000.

1804. NRC Generic Letter 95-05, "Voltage-Based Repair Criteria for Westinghouse Steam Generator Tubes Affected by Outside Diameter Stress Corrosion Cracking," August 3, 1995.

1805. Memorandum to A. Thadani from N. Chokshi, "Initial Screening of Candidate Generic Issue 188, 'Steam Generator Tube Leaks or Ruptures, Concurrent with Containment Bypass from Main Steam Line or Feedwater Line Breaches," May 21, 2001.

1870. Memorandum to L. Reyes from C. Paperiello, "Completion of Generic Safety Issue 188, 'Steam Generator Tube Leaks or Ruptures Concurrent with Containment Bypass from Main Steam or Feedwater Line Breaches,'" December 16, 2005.

1871. Memorandum to L. Reyes from J. Larkins, "Resolution of Generic Safety Issue 188, 'Steam Generator Tube Leaks or Ruptures Concurrent with Containment Bypass from Main Steamline or Feedwater Line Breaches,'" March 17, 2006.

ISSUE 194: IMPLICATIONS OF UPDATED PROBABILISTIC SEISMIC HAZARD ESTIMATES

DESCRIPTION

Historical Background

Beginning in the early-1980s, the NRC sponsored the development of a Probabilistic Seismic Hazard Analysis (PSHA) methodology by LLNL. For the purpose of conducting a systematic evaluation of the licensing criteria for older plants, a limited study of the seismic hazard at the sites where these plants are located was conducted in 1982 and documented in NUREG/CR-1582.[1834] In a 1982 letter, the USGS suggested that deterministic and probabilistic evaluations of seismic hazard should be made for the Eastern United States (EUS) to assess the likelihood of large earthquakes along the eastern seaboard. This led to the 1989 publication of the PSHA study of all 69 sites in the Central and Eastern United States (CEUS) by LLNL in NUREG/CR-5250.[1835] In conjunction with funding the LLNL study, NRC also recommended that the nuclear power industry conduct an independent study to present a coordinated utility position on PSHA estimates. The industry study of 56 CEUS sites was conducted by EPRI and the results were published in EPRI-NP-4726 in 1986.

A draft report on the trial implementation of the Senior Seismic Hazard Analysis Committee (SSHAC) guidance[1838] for the probabilistic seismic hazard assessment of the Watts Bar and Vogtle[1839] nuclear plants showed a higher probabilistic seismic hazard estimate for the Watts Bar site than the value obtained from NUREG-1488.[1836] The increase in the seismic hazard estimate was investigated in a follow-on study which identified the root causes to be a combination of characteristics of the Watts Bar site, such as the site-specific source zones characterization, and more generic ones, such as the modified ground motion model. Depending on whether new information becomes available, other sites could have similar conclusions, such as in the case of Vogtle, for which the mean estimates of the seismic hazard slightly decreased between the 1993 EUS and the 1998 Trial Implementation Plan (TIP) studies. This represented a new interpretation of new seismicity data and resulted in the identification of this issue.[1837]

Safety Significance

The safety concerns were: (1) Did the new data warrant concerns regarding the seismic design bases for nuclear power plants in the region around the Eastern Tennessee Seismic Zone (ETSZ)? and (2) Were other nuclear power plants in the region adversely affected?

ANALYSIS

Frequency Estimate

Large differences in the seismic hazard results between those from the LLNL study and the EPRI study led to the examination of the conflicting results. The staff decided to supplement the LLNL study by improving the elicitation of data and its associated uncertainty from the experts to better capture the uncertainty in our knowledge. The results of this study were published in NUREG-1488.[1836]

Although the PSHA results in NUREG-1488[1836] show that there is reasonable agreement on plant-specific SSEs, the LLNL seismic hazard estimates in the 10^{-4} to 10^{-6} range are systematically higher than the EPRI hazard results for this range. This is the range of seismic hazard that typically has the most influence on the contribution to seismic risk for nuclear power plants. In an attempt to better understand the reasons for the differences in the two methods, the SSHAC was established under the sponsorship of NRC, EPRI, and DOE in early-1993. The SSHAC report[1838] was published in April 1997 and stated: "Originally, some of the sponsors and participants proposed that one key objective should be to 'resolve' the differences between the LLNL and EPRI studies. However, the Committee quickly realized that the new project would be most useful if it were forward-looking rather than backward-looking - specifically, if it could pull together what is known about PSHA in order to recommend an improved methodology, rather than specifically attempting to figure out which of the two studies was 'correct,' or which specific problems with either study were most important in affecting the study's specific results."

In order to apply the SSHAC methodology, LLNL was contracted to perform a study[1839] (the TIP) of two trial sites (Watts Bar and Vogtle) in the Southeastern United States, a draft of which was completed in 1998. The TIP results for the Watts Bar site indicated that, at the mean annual frequency of 10^{-4}, the peak ground acceleration (PGA) value is about 0.45g, compared to a PGA of about 0.28g at the same mean annual frequency of 10^{-4} from NUREG-1488.[1836] In order to investigate the reasons for the difference in the results from the TIP and the earlier LLNL study, another study was conducted and documented in the draft report UCRL-ID 142039, "Comparison of the PSHA Results of the 1993-EUS-Update and the 1998-TIP Studies for Watts Bar," in March 2002. The introduction of the ETSZ, and to a lesser extent the change in the ground motion attenuation model, increased the potential for higher seismic hazard at sites in the proximity of the ETSZ. A comparison of the TIP and NUREG-1488[1836] hazard curves for the PGA values is shown in Figure 3.194-1 below.

At the reference annual frequency of 10^{-4}, the TIP results are about 1.6 times higher than the 1993 EUS-Update estimate. Sites with operating plants in the proximity of the ETSZ are Browns Ferry, Sequoyah, and Watts Bar. Based on the results for the Watts Bar site, there is a potential that the ETSZ could influence the seismic hazard at these other sites as well. The effect of changes in ground motion model, although secondary in nature, can increase the response spectrum shape in the high frequency range from 9 Hz to 50 Hz. A recent study[1840] also showed the increase of spectral ordinates in the high frequency end. Seismic input in the high frequency end of the response spectrum can cause relay chatter and other effects to vibration-sensitive components. The USGS seismic hazard maps for the Eastern Tennessee area also indicated a higher seismic hazard.

The assessment of seismic risk using seismic PRA models starts with a seismic hazard curve (e.g., frequency of exceedence versus PGA), as described above. Then, fragility curves (conditional frequency of failure versus PGA) for each structure, system, and component of interest must be derived. Finally, the fragility curves are convolved with the seismic hazard curve using event tree and/or fault tree logic models to calculate the frequency of various end states (e.g., CDF) - a fairly involved numerical integration. This calculation can be rather formidable - much more so than the usual internal events PRA, since a seismic event can both initiate an accident and also serve as a common mode failure mechanism for many components, structures, and systems in the plant.

If the change in the seismic hazard curve were a constant multiplicative factor, constant over the domain of the curve, the resulting change in seismic CDF would also be a simple multiplicative factor, since the proportional change would carry through the entire calculation. However, the TIP

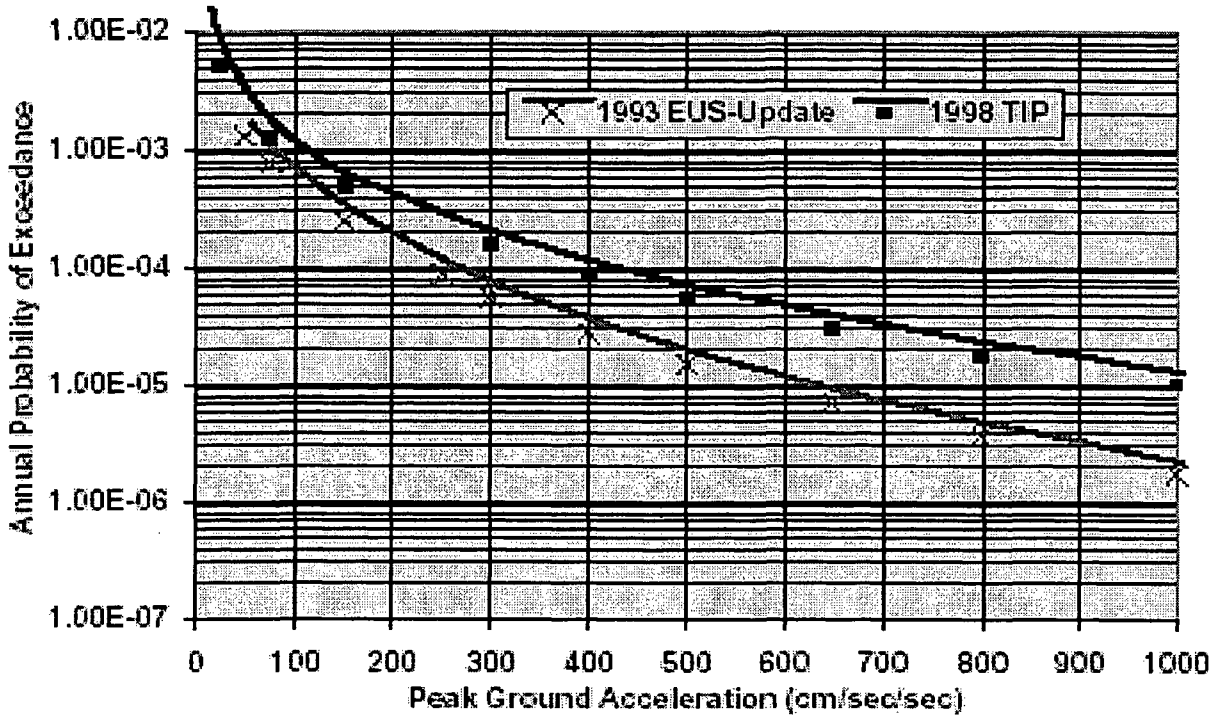

Comparison of the Mean Seismic Hazard Estimates for the Watts Bar Site
Figure 3.194-1

curve does not differ from the original curve by a constant factor. This does not change the Boolean logic of a PRA, but does change the numerical integrations. Another complication is that many plants do not have a seismic PRA, but rather as part of their IPEEE, many licensees performed a seismic margins analysis (SMA). This results in no quantification of the seismic risk at these plants, though it does provide a determination that there are safe shutdown paths that meet a required review level earthquake (RLE) and also identifies any potential vulnerabilities associated with those paths. For these plants, the IPEEE typically does identify an overall plant high confidence of a low probability of failure (HCLPF) value, though this value may take credit for plant modifications to resolve the identified vulnerabilities, anomalies, outliers, etc.

Fortunately, an August 1999 paper by Robert P. Kennedy ("*Overview of Methods for Seismic PRA and Margin Analysis Including Recent Innovations*," Proceedings of the OECD-NEA Workshop on Seismic Risk, Tokyo, Japan,) presented an approximate method of estimating seismic risk using the plant HCLPF value. This method assumed that the seismic hazard curve can be approximated by an exponential curve and that the fragility curves can be approximated as being log-normally distributed. Both assumptions are reasonable approximations for the purposes of the screening of this issue. Using these assumptions, this method develops a closed form solution for the seismic risk which was developed for use in sensitivity studies such as this. This method was used to develop a sense of the change in the risk estimates, based on the different seismic hazard curves (i.e., LLNL 1993 vs. TIP 1998) for the Watts Bar site. As a caution, these are simplistic calculations that give a rough estimate of the seismic CDF. However, a reasonable estimate of the expected change in CDF resulting from the change to the latest seismic hazard estimate can be obtained by applying the same approach to both sets of seismic hazard information.

The TIP results indicated that the mean seismic hazard estimate for Watts Bar was about two times greater than that estimated in NUREG-1488.[1836] To compare the impact of this new seismic hazard information on CDF for Watts Bar, a simple calculation was carried out using the approximate method described above. The specific steps of the approach are identified in Section 6.2.1 of the Kennedy paper.

This calculation addressed only the seismic contribution. It did not address random equipment failures/unavailabilities or operator errors. However, it was noted from the NRC contractor's TER on the Watts Bar IPEEE submittal that "... non-seismic failures are not expected to be significant for WBN [Watts Bar Nuclear] because there seems to be sufficient diversity and redundancy in the equipment selected in the SSEL [safe shutdown equipment list] for the success paths ..." and that "... significant human action problems are not expected for WBN." Therefore, neglecting any contribution to the CDF from simultaneous random equipment failure or adverse human action in this simple calculation should not lead to erroneous results.

The results of the Watts Bar IPEEE seismic analysis, performed in accordance with the EPRI SMA methodology as described in EPRI-NP-6041-SL, "Nuclear Power Plant Seismic Margin," Revision 1, August 1991, indicated that the plant HCLPF value exceeded the review level earthquake value of 0.3g PGA. There were no significant issues identified in the staff's SER or contractor's TER of this analysis, and there were no identified seismic vulnerabilities, anomalies, or outliers.

The simple calculation included some assumptions regarding the plant's seismic capability and the logarithmic standard deviation of 0.4 that was recommended in the Kennedy paper was used. A lower logarithmic standard deviation would result in higher calculated CDF and change in CDF values. In addition, Watts Bar had identified two success paths that both exceed a HCLPF value of 0.3g PGA. Using the HCLPF Max/Min method rules, the plant HCLPF is equal to the greater of the HCLPF values for these two success paths. However, it was not clear from the SER or TER what precise HCLPF values were achieved for each success path; only that they both exceeded 0.3g PGA. Therefore, in this analysis both success paths were assumed to only just meet the 0.3g PGA and, thus, this capacity was also used to represent the plant HCLPF in the analysis. If a higher HCLPF value were used, lower CDF and change in CDF values would be calculated. With the plant HCLPF of 0.3g PGA and assuming the logarithmic standard deviation of 0.4, the simplistic approach was used to estimate the risk associated with seismic events for the different seismic hazard information.

Using this method and the LLNL seismic hazard information documented in NUREG-1488,[1836] the Watts Bar seismic CDF was estimated to be about 10^{-5}/RY. Using this approach and the new seismic hazard information from TIP, the Watts Bar seismic CDF estimate increases to about 4 x 10^{-5}/RY. This approach implicitly assumed no change in the spectrum shape from the IPEEE study. But the TIP uniform hazard spectrum, which is based on a 10^{-4} mean PGA value, has higher spectral acceleration values than the design SSE spectral acceleration values above about 7 Hz and the increase peaks at about 25 Hz. However, in the 1 to 7 Hz range, the spectral acceleration values are significantly below those from the SSE spectrum. In order to account for the effect of this difference in spectrum shape on the CDF, the Watts Bar plant HCLPF value (0.3g) was scaled to the spectral acceleration values at 5 and 10 Hz, and the scaling relationships for 5 and 10 Hz spectral ordinate from the TIP uniform hazard spectrum were used to determine the CDF values at 5 and 10 Hz. The resulting average CDF was 1.8 x 10^{-5}/year. Therefore, accounting for the TIP uniform hazard spectrum shape, there was an increase in CDF of about 0.8 x 10^{-5}/year.

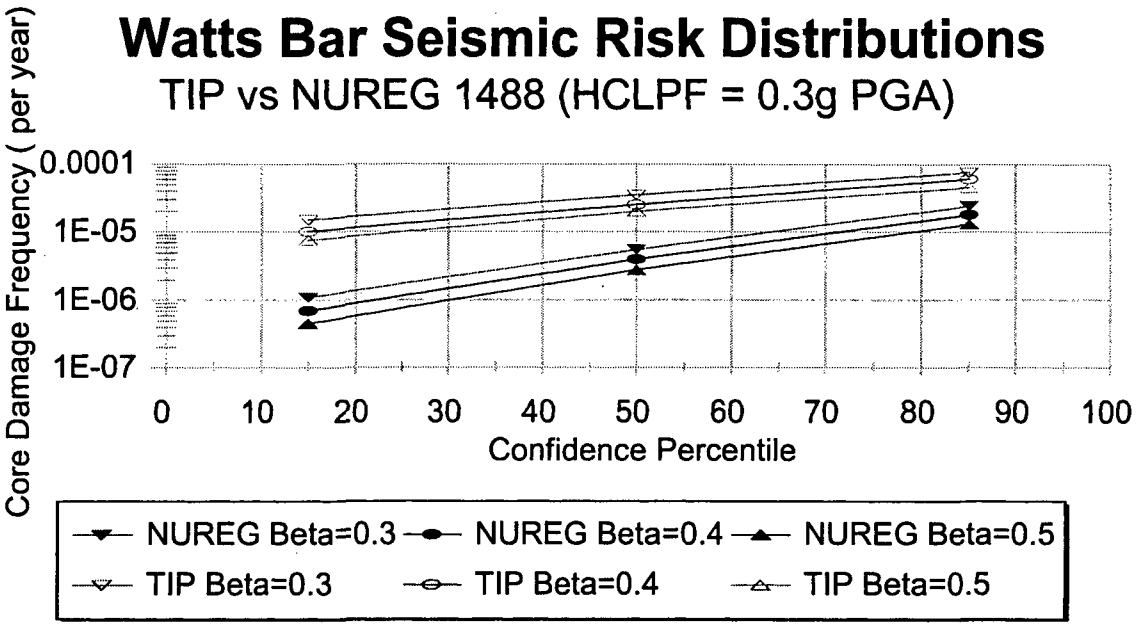

Figure 3.194-2

In order to determine the sensitivity of the estimated CDF for the Watts Bar site using the TIP seismic hazard curve, several CDF estimates were made using the mean, 15th, and 85th percentile hazards, with varying uncertainties (beta values). From Figure 3.194-2, it is apparent that the CDF values are not very sensitive to the percentile level of the hazard curve. This is because the HCLPF value is high and at the low end of the annual frequency of occurrence.

Other Considerations

This issue specifically addressed plants in the ETSZ. However, at the time of this analysis in 2003, the USGS had undertaken a nationwide effort of seismic hazard mapping under the National Earthquake Hazard Reduction Act. In early-2003, the USGS issued revised hazard maps using a methodology quite similar to the SHAAC approach and the NRC was conducting a study of the USGS methodology as a part of the 10-year seismic data base updating activity. This project was expected to lead to an assessment of seismic hazard at existing plant sites. At the end of the NRC study, a comprehensive perspective of the increase or decrease of plant seismic hazard and its effects on the SSE ground motion at all the EUS plants was expected to be available.

CONCLUSION

Based on the risk estimates associated with the spectrum shape for the Watts Bar site and Figure C5 of Management Directive 6.4, the issue regarding the adequacy of deterministic seismic design criteria for the licensing basis of plants in the ETSZ was excluded from further consideration. A generic study may be required to assess the significance for other plants, if the revised USGS results confirm the TIP results and show increases in the seismic hazard for more sites.[1841]

REFERENCES

1834. NUREG/CR-1582, "Seismic Hazard Analysis - Overview and Executive Summary," U.S. Nuclear Regulatory Commission, (Vol. 1) April, 1983.

1835. NUREG/CR-5250, "Seismic Hazard Characterization of 69 Nuclear Plant Sites East of the Rocky Mountains," U.S. Nuclear Regulatory Commission, (Vols. 1 to 8) January 1989.

1836. NUREG-1488, "Revised Livermore Seismic Hazard Estimates for 69 Nuclear Power Plant Sites East of the Rocky Mountains," U.S. Nuclear Regulatory Commission, (Draft) October 1993.

1837. Memorandum to J. Flack from D. Dorman, "Proposed Generic Safety Issue on the Implications of Updated Probabilistic Seismic Hazard Estimates," June 6, 2002.

1838. NUREG/CR-6372, "Recommendations for Probabilistic Seismic Hazard Analysis: Guidance on Uncertainty and Use of Experts," U.S. Nuclear Regulatory Commission, April, 1997.

1839. NUREG/CR-6607, "Guidance for Performing Probabilistic Seismic Hazard Analysis for a Nuclear Plant Site: Example Application to the Southeastern United States," U.S. Nuclear Regulatory Commission, October 2002.

1840. NUREG/CR-6728, "Technical Basis for Revision of Regulatory Guidance on Design Ground Motions: Hazard- and Risk-consistent Ground Motion Spectra Guidelines," U.S. Nuclear Regulatory Commission, October 2001.

1841. Memorandum to A. Thadani from N. Chokshi, "Results of Initial Screening of Generic Issue 194, 'Implications of Updated Probabilistic Seismic Hazard Estimates,'" September 12, 2003.

ISSUE 197: IODINE SPIKING PHENOMENA

DESCRIPTION

Historical Background

This GI was proposed[1860] in response to a concern raised by the ACRS in its May 21, 2004, report on the resolution of certain NUREG-1740[1861] items. The ACRS recommended that the staff develop a mechanistic understanding of iodine spiking phenomena so that analyses would reflect current plant operations and the capabilities of modern fuel rods to prevent coolant contamination.[1862]

To understand the safety (and possible burden reduction) significance of this GI, it is necessary to review the context within which it was raised. The ACRS and members of the staff had been discussing NUREG-1740.[1861] One of the contentions raised in the differing professional opinion (DPO) was:

> "The iodine spiking factor used for accident consequence analysis at plants with iodine coolant concentrations limited to less than 1.0 μCi/g and adopting the alternative repair criteria is too low."

The DPO author contended that the spiking factor used for the accident analyses would be too low if the TS limit on iodine concentrations in the coolant during normal operations were reduced. Some of the discussion at a preceding meeting of the ACRS Subcommittee on Materials & Metallurgy and Thermal-Hydraulic Phenomena centered on whether the existing approach to iodine spiking was sufficiently conservative to ensure that the 10 CFR Part 100 limits on dose to an individual at the exclusion area boundary would not be exceeded.

Discussion of the issue continued at the Full ACRS Committee meeting on May 23, 2004, during which time, the Committee members expressed dissatisfaction with the lack of a phenomenological understanding of iodine spiking, and the scatter in the existing data upon which empirical models are based. At this meeting, it was suggested that a risk-informed analysis might conclude that the potential risk would not justify expending further resources on this question, and perhaps the regulatory limits should be reexamined.

In its report,[1862] the ACRS stated: "The staff continues to treat iodine spiking in a conservative, empirical fashion. We recommend that the staff develop a mechanistic understanding of iodine spiking so that analyses reflect current plant operations and the capabilities of modern fuel rods." The report went on to say, "The staff has not accepted our recommendation to develop a mechanistic understanding of the iodine spiking issue. The staff continues to use a conservative, empirical estimate of iodine spiking for accident consequence analyses. This estimate is based on historical data that may not reflect current practices in plant operations or the capabilities of modern fuels to prevent coolant contamination. We again encourage the staff to take advantage of iodine studies available in the literature and develop a mechanistic understanding of the phenomenon."

Thus, in this one ACRS meeting, two questions regarding iodine spiking were discussed. The first question was the DPO author's contention that the staff's current spiking criteria are not bounding. The second question was from some ACRS members, who expressed some concern that the current spiking criteria might be out of date and overly conservative.

The memo which proposed[1860] this GI stated in its conclusion: "The ACRS recommendation for the development of a mechanistic understanding of iodine spiking phenomena is proposed by RES as a candidate GI. Consideration of the ACRS recommendation as a potential GI could result in studies of specific accident analysis scenarios and update of existing databases *to improve safety or to reduce the burden on licensees.*"

Thus, this GI involves two questions: (1) Are the existing criteria sufficient to be bounding even for the DPO's proposed new accident scenario? and (2) Are the existing criteria overly conservative (and overly burdensome to a licensee) given the progress which has been made in fuel performance over the years? This GI was examined for both **safety** and **burden reduction** aspects.

1. SAFETY ASPECT

Safety Significance

This GI is related to GIs B-65, "Iodine Spiking," and 74, "Reactor Coolant Activity Limits for Operating Reactors." However, GI-197 differs in that it was proposed in the context of a different accident scenario.

The phenomenon of iodine spiking has long been observed in operating reactors. After a power or primary system pressure transient, the iodine concentration in the reactor coolant can rise to a value many times its equilibrium concentration level, followed by a gradual decay back down to a lower level. This is of concern in steam generator tube rupture (SGTR) events, where primary coolant leaks into the secondary system, and thereby escapes to the environment, either through the steam jet air ejectors on the main condenser, or via the atmospheric dump valves or secondary system safety valves.

To address this phenomenon, SRP[11] Section 15.6.3 requires that the analysis of this accident assume an iodine spiking factor of 500. This spiking factor of 500 was chosen as a bounding factor for iodine spiking events. Specifically, the SRP[11] requires the analysis of two cases of iodine spiking events. The first assumes that a reactor transient has occurred earlier, and an iodine spike is already underway when the SGTR occurs. Because the coolant iodine activity is monitored periodically, the analysis of this case is based on the maximum value of primary coolant iodine concentration allowed by the TS. The calculated whole-body and thyroid doses at the exclusion area and low population zone outer boundaries must not exceed the limits described in 10 CFR Part 100, Section 11.

The second case assumes that the reactor scram and primary system depressurization associated with the SGTR event itself cause an iodine spiking event. In this case, the analysis assumes that the release rate from the fuel rods to the primary coolant (i.e., Curies/second) increases to a value 500 times greater than the release rate corresponding to the iodine concentration at the equilibrium value in the TS. The calculated whole-body and thyroid doses at the exclusion area and low population zone outer boundaries for this case must not exceed 10% of the limits described in 10 CFR Part 100, Section 11.

The May 21, 2004 ACRS report[1862] states: "The staff continues to treat iodine spiking in a conservative, empirical fashion. We recommend that the staff develop a mechanistic understanding of iodine spiking so that analyses reflect current plant operations and the capabilities of modern fuel rods." The safety significance of the phenomenon of iodine spiking has already been examined (in 1986) under GI B-65, "Iodine Spiking," which was given a low priority ranking based on very low

safety significance. However, the GI B-65 analysis was based on a coincident small LOCA (for BWRs) or a coincident SGTR (for PWRs). An examination of the transcript for the 509th ACRS meeting, held on February 5, 2004, revealed that this new issue was raised in the context of a main steam line break accident (MSLB) that, in turn, causes one or more steam generator tubes to rupture. (See GIs 163, "Multiple Steam Generator Tube Rupture," and 188, "Steam Generator Tube Leaks/Ruptures Concurrent with Containment Bypass, From Breach of Main Steam or Feedwater Line.")

There have been a number of attempts to build mathematical models of iodine release, and fit them to empirically observed data. Some of these attempts are as follows:

- Onega, R. J., and Florian, R. J., "A Model of the Iodine Spiking Phenomenon Following a Power Change," Transactions of the American Nuclear Society, V. 44, pp 369-370, June, 1983.

- Ho, J. C., "Pressurized Water Reactor Iodine Spiking Behavior Under Power Transient Conditions," *International Topical Meeting on Nuclear Thermal Hydraulics, Operations, and Safety*, Taipei, Taiwan, 1984.

- Lin, C. C., "Radiochemistry in Nuclear Power Reactors," NAS-NS-3119, *National Academy Press*, Washington, D.C., 1996.

- Lewis, B. J., Iglesias, F. C., Postma, A. K., and Steininger, D. A., "Iodine Spiking Model for Pressurized Water Reactors," *Journal of Nuclear Materials*, V. 2444, pp 153-167, 1997.

- Lutz, R.J., and Chubb, W., "Iodine Spiking - Cause and Effect," *Transactions of the American Nuclear Society - 1978 Annual Meeting,*" V. 28, pp 649-650, June 1978.

- Neeb, K.H., and Schuster, E., "Iodine Spiking in PWRs: Origin and General Behavior," *Transactions of the American Nuclear Society - 1978 Annual Meeting,*" V. 28, pp 650-651, June 1978.

- Caruthers, G.F., and Gritz, R.W., "Radioiodine Behavior During a Steam Generator Tube Rupture Accident," *Transactions of the American Nuclear Society - 1978 Annual Meeting,*" V. 28, pp 653-654, June 1978.

These models are all built on an assumed physical causative model of a fuel pin with a defect. During power operation, iodine collects on the surfaces of the fuel pellets and internal cladding surface, probably as cesium iodide or some other water-soluble salt. However, during operation, the internal free volume of the fuel pin is steam-blanketed, and relatively little iodine is transported out of the pin. If the reactor is shut down, or if power is significantly reduced in a power transient, liquid water will enter the gap volume, dissolving any soluble iodine compounds, which then can readily diffuse out of the cladding. Similarly, a pressure transient could force liquid water in or out of the defected fuel pin, thereby transporting iodine into the bulk primary coolant.

It should be noted that, if there were no cladding defects in the core, according to this model the specific activity of iodine in the cladding would drop to zero, under both equilibrium and non-equilibrium conditions. The presence of "tramp" uranium, i.e., traces of uranium on the outside of the cladding left over from manufacture of the fuel, complicates the model. Iodine produced from fissioning of tramp uranium would not be expected to contribute to spiking, since it is already outside of the cladding, but would contribute to the equilibrium specific activity in the coolant.

Unfortunately, there do not seem to be any readily-available experimental verifications of this causative model, i.e., controlled experiments on individual fuel pins in a laboratory setting. The models mentioned above involve comparisons with data from historical events. As the ACRS suggested, a better understanding of the actual physical processes could lead to new strategies to suppress iodine spiking, or more sophisticated TS to address this phenomenon.

In this context, there are two aspects to the safety significance of this issue. First, as stated above, this issue was raised in the context of a main steam line break which causes one or more steam generator tubes to rupture. Such an event would cause a reactor scram (which would allow liquid water ingress in any defected fuel pins) followed by a cooldown and depressurization (which would tend to assist the transport of dissolved iodine compounds out of the defected fuel pins and into the primary coolant). Moreover, the combination of tube rupture and main steam line break provides a means for release of the contaminated coolant to the atmosphere, bypassing the containment.

Second, the current safety analyses are based on a limit in the TS on iodine concentration in the primary coolant, and a conservative fuel release rate multiplier (spiking factor), to calculate an upper bound to the maximum concentration after a transient. In the absence of a detailed understanding of the physical phenomena involved in iodine spiking, there is little basis to assume that the peak iodine concentration is a function of the equilibrium concentration. Therefore, reducing the "initial condition" iodine concentration by decreasing the limit in the TS may or may not proportionally reduce the peak concentration. Some experimental investigation of this has been reported. (Brutschy, F.J., Hills, C.R., Horton, N.R., and Levine, A.J., "Behavior of Iodine in Reactor Water During Plant Shutdown and Startup," NEDO-10585, August 1972.)

Possible Solution

There is no explicit solution identified for this issue. Instead, the ACRS discussions cited above recommended performing basic research to better understand the iodine spiking phenomenon, and the iodine transport processes which cause it. Once a better scientific understanding is achieved, it might be possible to devise a more sophisticated means to prevent, mitigate, or accommodate iodine spiking.

SCREENING ANALYSIS

Iodine Spiking Phenomena: As was discussed above, an iodine spike can be initiated by a power or pressure transient. Once the iodine is present in the bulk coolant, it's concentration will be a function of the release rate from any leaking fuel pins balanced against removal by radioactive decay (approximately an 8-day half life for I-131, less for the other excess-neutron iodine isotopes) and removal by the reactor water cleanup system.

Let	A	=	total I-131 activity in the coolant (in Curies)
	R	=	Iodine release rate from the reactor fuel pins to the coolant (Ci/hour, total for the whole core)
	λ_t	=	total removal rate (hour^{-1})

Then, during normal operation,

$$\frac{dA}{dt} = R - A\lambda_t$$

The removal rate consists of two terms:

$$\lambda_t = \lambda_d + \lambda_p$$

The two terms in the removal rate (λ_t) are λ_d, the removal rate due to radioactive decay, and λ_p, the removal rate due to purification (in the reactor water cleanup system).

The removal rate due to radioactive decay is just the disintegration constant, and can easily be calculated from the half life, which is 8.02 days for I-131. This works out to

λ_d = 3.60E-3/hour. About 0.36% of the I-131 decays away every hour.

The removal rate due to the reactor water cleanup system is also readily calculated. It is given by:

$$\lambda_p = \frac{F\left(1 - \frac{1}{DF}\right)}{M}$$

where F = Flow through the reactor water cleanup system
M = RCS coolant inventory mass
DF = Decontamination factor in the cleanup system

These parameters can all be estimated from data given in the PWR training manual.

F = 75 gpm, the flow through the letdown orifice. At 550°F, this is 28,097 lb/hour, which is 12,745 kg/hour, or 1.2745E7grams/hour. (At a temperature of 550°F and pressure of 2000 psi, the specific volume of liquid water is 0.02141 ft^3/lb.)

M = Total mass of RCS coolant, at operating conditions. The system liquid volume is 11,892 cubic feet (including the pressurizer). At 550°F, this is 555441 lb, or 2.52E8 grams.

DF = The design decontamination factor is 10, i.e., 90% removal efficiency.

Then, λ_p = 0.04552/hour. In other words, about 4.6% of the iodine is removed by the cleanup system every hour.

Note that, for I-131, the removal rate due to radioactive decay is less than one tenth of that due to coolant purification.

$\lambda_t = \lambda_d + \lambda_p$ = 0.04912 /hour.

Now consider equilibrium full-power conditions. The time derivative is zero:

$$\frac{dA}{dt} = 0$$

Therefore, $$R_0 = A_0 \lambda_t$$

where A_0 is the equilibrium activity in the coolant and R_0 is the equilibrium release rate from the fuel. If the specific activity is at the 1.0 µCi/g TS limit, and the total mass of coolant is 2.52E8 grams, A_0 is 252 Curies, and R_0 is 12.38 Curies/hour.

The normal licensing assumption is to assume that, in the event of a transient, the release rate increases by a factor of 500 and the removal rate drops to zero. The activity then rises linearly from A_0 to higher and higher values for the duration of the event (usually eight hours). Note that this licensing assumption does not lead to a "spike;" instead it assumes that the iodine released from the fuel is inexhaustible and all removal mechanisms stop, so the activity increases monotonically until the event is terminated. This is intended to bound any real iodine spike. Using the numbers developed above, the activity would rise to approximately 50,000 Ci, which in a coolant mass of 2.52E8 grams gives a specific activity of approximately 200 µCi/g for a bounding value.

To put this conservative model into perspective, it is worthwhile to examine some actual experience. The iodine spiking phenomenon has been the subject of several studies which have examined historical data:

- Lin, C. C., "Radiochemistry in Nuclear Power Reactors," NAS-NS-3119, *National Academy Press*, Washington, D.C., 1996.
- Lewis, B. J., Iglesias, F. C., Postma, A. K., and Steininger, D. A., "Iodine Spiking Model for Pressurized Water Reactors," *Journal of Nuclear Materials*, V. 2444, pp. 153-167, 1997.
- Brutschy, F.J., Hills, C.R., Horton, N.R., and Levine, A.J., "Behavior of Iodine in Reactor Water During Plant Shutdown and Startup," *NEDO-10585*, August 1972.
- Adams, J.P., "Iodine Spiking Data from Commercial PWR Operations," *EG&G-NERD-8395*, February 1989.
- Adams, J.P., and Atwood, C.L., "Probability of the Iodine Spike Release Rate During an SGTR," *Transactions of the American Nuclear Society,* V. 61, pp. 239-240, June 1990.
- Adams, J.P., and Sattison, M.B., "Frequency and Consequences Associated with a Steam Generator Tube Rupture Event," *Nuclear Technology*, V. 90, pp. 168-185, May 1990.
- Adams, J.P., and Atwood, C.L., "The Iodine Spike Release Rate During a Steam Generator Tube Rupture," *Nuclear Technology*, V. 94, pp. 361-371, June 1991.
- Pasedag, W.F., "Iodine Spiking in BWR and PWR Coolant Systems," Paper presented at the ANS Thermal Reactor Safety Meeting, Sun Valley, ID, CONF-770708, 1977.

The "spike" is not symmetrical. In general, the iodine activity in the coolant climbs rapidly after the initiating transient, reaching a maximum in four to five hours. By 10 hours, the activity is dropping, but it is still elevated at 30 hours. Most of the papers in the literature do not list much data at times greater than 30 hours, but there is some indication that the spike is not effectively "over" until 30 to 40 hours have elapsed (Lewis, B. J., Iglesias, F. C., Postma, A. K., and Steininger, D. A., "Iodine Spiking Model for Pressurized Water Reactors," *Journal of Nuclear Materials*, V. 2444, pp 153-167, 1997). This is consistent with the assumption that the rise is governed by the transport of iodine out of leaking fuel pins, but the fall is governed by removal of iodine via the reactor water cleanup

system and radioactive decay. Individual events will vary from these general observations, since the size and number of cladding defects will vary, and the specific cleanup systems will vary. Moreover, since a real transient at a real plant may involve power reductions, subsequent scrams, and/or multiple primary pressure changes, there may be a secondary peak in iodine coolant activity.

The "height" of the spike, meaning the maximum iodine coolant specific activity achieved during the course of the event, can vary widely. In the papers cited above which report historical data, the maximum activities tabulated are all less than 20 μCi/gm.

In a 1990 paper (Adams, J.P., and Atwood, C.L., "Probability of the Iodine Spike Release Rate During an SGTR," *Transactions of the American Nuclear Society,* V. 61, pp. 239-240, June 1990), data from 168 actual events were tabulated. To obtain some perspective on the historical experience, the data was scanned and loaded into a spreadsheet for some statistical analysis. The results are given in Table 3.197-1:

Table 3.197-1

	Measured steady-state iodine concentration before trip (μCi/g)	**Maximum measured iodine 2 to 6 hours after trip (μCi/g)**	**R, iodine release rate based on bounded max iodine concentration & assumed 2 hour time from trip to max concentration (Ci/hour)**
Mean	4.90E-02	7.57E-01	2.61E+02
Median	1.39E-02	1.91E-01	6.80E+01
95th percentile	1.81E-01	3.25E+00	1.18E+03
Maximum	5.64E-01	1.44E+01	5.53E+03

It should be noted that these data are on plants with different rated powers & therefore different core sizes. Moreover, these events were not initiated by steam line breaks combined with SGTRs; they were initiated by milder transients. Finally, the maximum measured post-accident concentrations are not necessarily the peak concentrations, since the peak may not have occurred at the time the sample was taken. (To allow for this, the maximum measured concentrations were conservatively multiplied by a factor of three to get a "bounded maximum value," and this bounded value was used to calculate the release rates in the rightmost column.) Regarding the maximum measured values, it should be noted that 95% of the events were below 3.25 μCi/g.

Again, the licensing basis model gave a peak specific activity of 200 μCi/g, based on a conservative release rate of 6190 Ci/hour for eight hours. Thus, the model does indeed appear to be conservative.

Assumed Coolant Activity: The maxima discussed above are not directly applicable to this GI, since these events generally resulted from operational transients. This GI postulates a higher spike, which is initiated by a more severe, combined power and pressure transient.

As will be shown later, the event of interest realistically will last about two hours. Assuming a steam line break with tube rupture occurs, the question becomes, how high will the specific activity climb in two hours? The reactor water cleanup system will isolate, so the only removal will be by radioactive decay (which will be very little in two hours time) and by dilution (i.e., coolant lost to the secondary side of the steam generators, and replaced by injection flow). Credit for dilution is not

being given in this analysis, so it will be assumed that essentially all the iodine released to the coolant stays there, and builds up linearly at the rate given by the post-initiation release rate from the core.

If the current licensing assumption (that R is multiplied by a factor of 500) is used, the rate of release from the fuel to the coolant is assumed to instantaneously rise from the equilibrium value of 12.38 Curies/hour to 500 times this, or 6190 Curies/hour. In two hours, and with no iodine removal, the coolant inventory will then acquire an additional 12,380 Curies of iodine. For a coolant mass of 2.52E+8 grams, this is an addition of about 49 μCi for each gram of coolant. Added to the initial specific activity of one μCi/g, the total specific activity two hours after the initiating event would be about 50 μCi/g. If the event continues on past two hours to eight hours after the initiating event (as in the conservative licensing basis), the specfic activity in the coolant would continue to rise linearly to approximately 200 μCi/g.

However, this GI postulates that the licensing assumption is not sufficient in the case of a more severe, combined power and pressure transient. For this analysis, an iodine spike of 1000 μCi/gm, will be assumed. No credit was taken for lower concentrations as the spike builds up; it was assumed that the coolant specific activity is 1000 μCi/gm for the entire duration of the transient. This should bound any credible spiking from the more severe accident implicit in this GI.

SGTR: The design basis assumption for a "classic" SGTR event is the spontaneous double-ended rupture of a single tube. According to the analysis used in the NUREG-1150[1081] PRAs, such a double-ended rupture corresponds to a primary-to-secondary leak that requires an equivalent makeup of 600 gpm, i.e., is equivalent in mass flow to 600 gpm of liquid water at room temperature.

Although a number of SGTR events have occurred in actual operational experience, relatively few events have even approached a leakage equivalent to 600 gpm (Adams, J.P., and Sattison, M.B., "Frequency and Consequences Associated with a Steam Generator Tube Rupture Event," *Nuclear Technology*, V. 90, pp. 168-185, May 1990). However, the experience with these "spontaneous" SGTR events is of limited applicability to this GI, since the issue postulates that a steam line break causes cracks to open up in the steam generator tubes, causing one or more significant leaks.

For a single tube rupture, 600 gpm would be considered to be bounding. Because this GI assumes that an initiating event, the steam line break, causes tubes to break, the assumption that only one tube breaks may not be valid - the pressure transient might cause a large number of tubes to leak, and the total leakage would not necessarily be bounded by the flow through a single-tube guillotine rupture. What flow rate can then be used as a "representative" flow rate for this GI? To answer this question, the accident sequence will be explored in more detail.

Accident Sequences

The accident sequences of interest are initiated by a break in a main steam line, accompanied by a SGTR. The course taken by the accident sequence depends on whether the break is located within or outside of containment, and upstream or downstream of the main steam isolation valve (MSIV). If the break is located inside of containment, any contamination will be confined to the interior of the containment. Moreover, the course of the transient will be very similar to that of a successfully-mitigated small break loss of coolant accident. Iodine spiking is not expected to result in any significant offsite doses for this sequence. Thus, this analysis will assume that the steam line break occurs outside of the containment. This leaves two possibilities, depending on whether the break is upstream or downstream of the MSIV.

For most plant designs, each main steam line is provided with an isolation valve (the MSIV) and possibly a check valve just outside the containment. The main steam piping up to these valves, and the structure enclosing the valves, are Seismic Category 1. Since there is a much longer length of piping downstream of the MSIV, and this piping is not seismically qualified, a steam line break is more probable in the downstream piping than in the relatively short length of piping between the containment penetration and the MSIV. However, the secondary side code safety valves, relief valves, and steam line for the turbine-driven auxiliary feedwater pump are normally connected to this section of piping upstream of the MSIV. Although a spontaneous pipe break in this section is unlikely, there has been at least one event where, during hot functional testing, a safety valve broke off its flange, resulting in an energetic, uncontrolled blowdown (See GI-188). Thus, this analysis will postulate breaks both upstream and downstream of the MSIV. (A thermal-hydraulic analysis of both accident sequences can be found in NUREG-0937.[860])

Break Downstream of MSIV

When a steam line ruptures, the steam generator associated with that steam line will begin to blow down through the break. Steam flow will be limited to approximately 200% of normal, full power flow by the flow restrictors which are located near the exit of each steam generator. In addition, unless the plant is equipped with non-return valves in the steam lines, the other steam generators will similarly blow down, with steam flowing down the intact steam lines to the turbine steam header, then backwards to the break in the faulted line. As pressure falls in the secondary side of the steam generators, temperature also drops, resulting in a rapid cooldown of the primary system. The reactor will scram, the pressurizer level and pressure will drop, the MSIVs will close, and safety injection and aux feedwater will initiate. (According to the analysis in the Surry FSAR, this will take approximately 20 seconds.) At this point, the plant is in a safe condition, with decay heat being removed by the power-operated relief valves on the steam lines upstream of the MSIVs, with secondary side inventory being maintained by the aux feedwater system. The operator can then take manual control, using these PORVs to cool the system down to the point where the residual heat removal system can take the plant to cold shutdown. (Alternatively, if the plant is equipped with non-return valves in the steam lines, the operator may be able to open one or more MSIVs and use the main condenser bypass to remove thermal energy. If a rapid response is desired, the pressurizer PORV can be opened to reduce primary pressure.)

The situation changes somewhat if, as this GI would assume, the steam line break is accompanied by a SGTR or ruptures in the affected steam generator. The primary-to-secondary leak will transport primary coolant activity to the secondary side of the affected steam generator, resulting in an initial "puff" of activity through the broken steam line, terminating when the MSIVs close. After MSIV closure, pressure will rise in the secondary side of all the steam generators as the water inventory continues to boil, but will rise more rapidly in the steam generator with the primary-to-secondary leak. It is this steam generator which will reach the pressure setpoints first, and contaminated steam will be discharged through the relief and/or safety valves. This release will continue intermittently until the plant operator takes control. Once the faulted steam generator is identified, the operator will isolate feedwater to that generator, and manually use the relief valves on the good steam generators to cool the plant down. This will terminate the release.

The duration of the release is governed by the time it takes for the operator to identify the faulted steam generator, and the time needed to cool and depressurize the primary system to the point where the pressure in the faulted steam generator drops below its lowest safety valve and relief valve settings. Estimates of this time interval vary. The NUREG-1150[1081] PRA for Surry assumes 45 minutes for successful depressurization of the primary system, after a spontaneous SGTR.[1318]

However, an analysis of a stuck-open main steam line safety valve[1475] assumed approximately two hours to reduce pressure to the point where RHR initiation was possible.

Neither of these is directly applicable, since the accident sequence of interest is a main steam line break accompanied by a consequent rupture of steam generator tubes. As Reference q, which analyzed such a sequence, points out, the operator will be responding to the main steam line break, and may not be immediately aware of the SGTRs. Although the response to a main steam line break would still call for the same response - depressurization and cooldown - there might not be the same degree of urgency if the operator were not aware of the tube ruptures. Of course, the tube ruptures will become evident from the behavior of the water level in the faulted steam generator, coincident with low aux feedwater flow and high radiation in the steam generator blowdown line. It will be assumed, based on judgment, that up to one hour will be required for the operator to initiate cooldown.

The time to cool down to the point where the secondary safety and relief valves close also does not appear in the literature. A rough estimate can be made by noting that the average coolant temperature in the reactor vessel at full power is 578.2°F (from the PWR systems manual), and the lowest main steam safety valve setpoint is 1064 psig, which corresponds to 548.2°F for saturated water conditions. This is a temperature difference of 30°F, which, at a typical cooldown rate of 50°F/hour would require roughly 36 minutes. Of course, the PORVs would be set at a lower pressure, so either the block valves would have to be closed or the cooldown would have to be continued to stop all release of steam from the faulted steam generator to the environment. Based on this admittedly rough calculation, it will be assumed that up to one hour after the initiation of cooldown will be needed to cool down to the point where the release is stopped. Thus, it will be assumed that, after the initial "puff," contaminated steam will be released for another two hours.

Frequency Estimate

The initiating event for this scenario is a break in the main steam lines after the MSIVs. Steam lines downstream of these isolation valves were not held to the same stringent requirements as were the primary system pipes when the plants were licensed, e.g., these pipes were not held to the same standards for withstanding seismic events. Thus, previous GI screenings have assumed a higher break frequency for this piping (See GIs A-21 and A-22). The pipe break frequency was estimated to be 10^{-3} break/RY.[32]

Since this frequency estimate dates back to 1976, and considerable experience has been gained in the intervening years, it is appropriate to examine the reasonableness of this number. As of December of 2004, collective domestic reactor experience stands at approximately 1845 PWR-years and 1005 BWR-years, giving a total of 2850 RY. These are calendar years, so the years of actual full-power operation would be 10% to 20% less than this number. Nevertheless, if the true frequency of pipe breaks downstream of the MSIVs were 10^{-3}/RY, one would expect to see some actual events by now. Thus, it is unlikely that the true value is greater than 10^{-3}.

Source Term

As was stated above, the release is expected to consist of two components - an initial release out the broken steam line as the steam generator blows down, and a longer term intermittent release out of the main steam relief valves. The initial release will be terminated when the MSIVs close (about 20 seconds, according to the Surry FSAR).

The design steam flow rate for a model F steam generator is 3.78 x 10^6 lbs/hour during normal operation. In the event of a steam line break, the steam flow would greatly increase as steam escaped to the atmosphere through the break, but the steam flow would be limited by the flow restrictors to approximately double this value. After about 20 seconds, the MSIV would be closed, terminating the release. This works out to a release of approximately 42,000 pounds of steam.

The specific activity (in μCi/g) in the escaping steam is problematic, since it depends on both the primary coolant specific activity, the primary to secondary leak rate, and the dilution in the secondary volume. Clearly, a low rate of primary to secondary leakage will result in a low release through the broken steam line. Conversely, if a large number of tubes were to rupture, the influx of primary coolant into the secondary volume, driven by a large differential pressure and at a somewhat higher temperature, would tend to increase secondary pressure (and thereby reduce boiling in the secondary water), and a large fraction of the escaping steam would result from flashing of the primary coolant. In the extreme case, if approximately 35 tubes were to rupture, each discharging 600 gpm of primary coolant, the mass influx would approximate the mass of steam being discharged out of the steam line.

For the purposes of this analysis, this extreme case will be assumed, that is, the steam escaping from the broken line will transport one millicurie of iodine per gram, the same specific activity as for the primary coolant, for 20 seconds. This works out to a release of approximately 19,000 Curies.

This initial release will be terminated by closure of the MSIVs. Primary coolant will continue to flow into the steam generator, but the flow rate will diminish as the pressure equalizes between the primary and secondary systems. The faulted steam generator will be at a higher pressure than the other steam generators, and, as decay heat continues to add thermal energy to the system, the secondary side safety valves associated with that steam generator will lift intermittently. Meanwhile, coolant will be supplied to the primary system by the high pressure ECCS. Depending on the coolant level and height of the tube breaks, there will either be boiling in the core, with steam escaping through the broken tubes, or, if there is sufficient coolant inventory in the primary system, heat will be transported by the coolant to the steam generator and cause boiling on the secondary side.

Although the secondary PORVs (or safety valves) will release steam intermittently as the valves cycle, the average steam flow out of these valves will be governed by the decay heat produced in the reactor core plus the energy added by the reactor coolant pumps, if they are still running. Ten minutes after the reactor scrams, decay heat is about 2.33% of full power, and will drop to about 1.15% by two hours after shutdown. For the purposes of this analysis, a constant core power of 2% will be assumed. It will also be assumed that the reactor coolant pumps remain running. These two assumptions, which will result in a slightly larger release, add a modest amount of conservatism. The various powers and flow rates can be estimated by a simple heat balance, as shown in Table 3.197-2.

The steam releases are well within the capacity of one safety valve (usually about 750,000 lbm/hr.). (The four PORVs generally can accommodate 10% of rated steam flow, i.e., 2.5% per PORV for a four-loop plant, which works out to 94,500 lbm/hr, so one PORV might not be quite sufficient to vent the steam at the beginning of the interval.) The matching injection flow requirement is within the capability of the high pressure ECCS, and the primary to secondary flow could be accommodated by just two completely ruptured tubes - more extensive tube ruptures will not increase the flow. This limiting, although somewhat artificial, situation has the primary-to-secondary leak acting as feedwater for the faulted steam generator. The primary-to-secondary flow is likely to overfill the secondary side of the steam generator, and the level control valves for the auxiliary

feedwater system, if in automatic control, will close.[860] Thus, there will be little or no dilution of the iodine activity in the water.

Table 3.197-2

	2.33% (10 minutes after shutdown	1.15% (2 hours after shutdown	2%
Decay heat (MWt)	79.5	39	68
Pump power (MW)	14.94	14.94	14.94
Total heat input (MWt)	94.4	54	83
Steam released (lbm/hour)	280,000	161,000	247,000
Primary to secondary flow, gpm of hot liquid	768	440	675
Required injection flow (gpm)	563	322	495

It was assumed that the plant operator will identify the faulted steam line, shut off feedwater to the associated steam generator, and open the atmospheric dump valves in one or more of the other steam generators in order to reduce the temperature of the primary system and terminate the steam release out of the faulted steam generator. Once the primary system pressure drops below the setpoint of the secondary safety valves, the release of primary coolant activity will be terminated. Eventually, the primary system will be cooled down to the point where the residual heat removal system can be placed into service to bring the plant to cold shutdown.

Thus, the release during this two-hour "simmering" period would be approximately 247,000 lbs of contaminated steam. At the assumed specific activity of 1 millicurie/gram, this corresponds to a release of approximately 224,000 Curies.

Consequence Estimate

The consequences for the source term described above were estimated using the MACCS2 code and the standard site parameters for GI analysis. The analysis included Cs-134 and Cs-137 in addition to the iodine group (I-131, I-132, I-133, I-134, and I-135) because, if the iodine is deposited in the fuel in the form of a soluble salt, the cesium will "spike" along with the iodine. The results, for a 50-mile radius, were a mean population dose of approximately 4,600 person-rem, as shown in Table 3.197-3. (Results in this and in subsequent tables are given to three significant figures for the convenience of the reader who wishes to follow the calculations, and are not intended to imply that these parameters are known to this accuracy, as the percentile range given in the table itself clearly shows.)

Table 3.197-3

	Mean	Median	95th percentile
Total whole-body dose to 50 miles (person-rem)	4580	4810	7380
Thyroid dose to 50 miles (person-rem)	78700	78700	143000
Whole-body dose at site boundary (rem)	3.89	0.372	12.8
Thyroid dose at site boundary (rem)	61.4	2.36	208

Break Upstream of MSIV

As in the previous sequence, the steam generator associated with the steam line will blow down. Steam flow will be limited to approximately 200% of that corresponding to normal, full power flow by the flow restrictors which are located near the exit of each steam generator. As before, unless the plant is equipped with non-return valves in the steam lines, the other steam generators will similarly blow down, with steam flowing down the intact steam lines to the turbine steam header, then backwards to the break in the faulted line. As pressure falls in the secondary side of the steam generators, temperature also drops, resulting in a rapid cooldown of the primary system. The reactor will scram, the pressurizer level and pressure will drop, the MSIVs will close, and safety injection and aux feedwater will initiate. This will terminate the flow from the good steam generators. However, unlike the previous scenario, in this sequence the steam generator associated with the faulted steam line will continue to blow down all the way to atmospheric pressure.

This time, the operator cannot immediately use the other steam generators to remove decay heat. The blowdown of the steam generator associated with the faulted steam line will cause a significant cooldown and pressure drop in the primary system. The other steam generators will actually be at a higher temperature than that of the primary system, and would have to be blown down to atmospheric pressure in order to "compete" with the faulted steam generator.

If there were no SGTR, the operator could take control by isolating all feedwater to the faulted generator. After boiloff of the remaining liquid water inventory ("dryout") in the faulted steam generator, heat removal via that steam generator would stop, and the primary system would heat up to the point where the other steam generators could remove heat. Eventually, the operator would cool the system down by means of the intact steam generators and depressurize to the point where the RHR system could be put in service.

However, the presence of a primary-to-secondary leak can complicate the matter. Because the steam line is open between the containment wall and the MSIV, the primary coolant escaping via the ruptured steam generator tube(s) cannot be isolated. The activity will be released to the environment via the broken steam line, and the release will not stop until the primary system is cooled to below 212°F and depressurized. If the leak through the ruptured steam generator tube is large enough, sufficient mass and energy may be lost from the primary system to assist in the necessary cooldown and depressurization. However, the escaping primary coolant will be lost to the atmosphere, and not be recoverable to the containment sump. This is not of concern for the purposes of this GI, since it would lead to a core melt scenario where the question of iodine spiking would be moot. Instead, such a core-melt scenario would be within the scope of GI-188.

Frequency Estimate

As was discussed earlier, the steam lines upstream of the MSIVs, and the structure enclosing the valves, are Seismic Category 1. Historically, PRAs have used a break frequency of 10^{-4} pipe break/RY, total, for all of the large piping of this quality in the plant. In this case, the relevant piping is a relatively short length running from the containment wall to the MSIVs. Thus, the normal assumption would be that the frequency of a large break in this area would be a fairly small fraction (up to 10%) of the "total" large-break frequency of 10^{-4} break/RY.

However, as was discussed previously, there has been at least one event where, during hot functional testing (not power operation), a safety valve broke off its flange, resulting in an energetic, uncontrolled blowdown (See GI-188). The event was apparently caused by a design error, in that

the valve mounting was designed adequately for the pressure loading, but was not sufficient to accommodate the reaction forces when the valve was discharging steam. Thus, the relevance of this event can be debated - presumably the design error has been corrected.

As was discussed previously, collective domestic reactor experience stands at approximately 1845 PWR-years and 1005 BWR-years, giving a total of 2850 RY. If the safety valve event were a random, uncorrected failure, this would imply a frequency of about 3.5E-4 event/RY. Conversely, if the event were assumed to be completely corrected, the normal PRA assumption would be a random break frequency of 10^{-5} event/RY. Based purely on judgment, this analysis will assume a frequency of 10^{-4} break/RY.

Source Term

For this sequence, the initial "puff" will not be terminated by MSIV closure, but instead will continue until the steam generator approaches atmospheric pressure. The duration of this blowdown, and the activity released during this interval, will be governed by the degree of primary-to-secondary leakage. Because the underlying assumption of this GI is that the steam line break causes more extensive damage to the steam generator tubes, it is necessary to assume that more than one SGTRs. For this analysis, it will be assumed that five tubes completely rupture, for the pragmatic reason that NUREG-0937[860] provides a thermal-hydraulic analysis for an event where this many tubes rupture. (It will be shown later that, under this assumption, this initial blowdown contributes roughly 20% of the total activity released. Thus, the final result will not be overly sensitive to this assumption.)

Following the analysis in NUREG-0937,[860] the blowdown is largely over after about 180 seconds (three minutes). At 200% steam flow, this is about 378,000 pounds of steam. (This is somewhat conservative, since in reality the flow would taper off as the pressure dropped.) The secondary water volume is about 84,000 pounds, so most of this would be primary coolant plus whatever the aux feedwater system can add during this interval. At one millicurie/gram in the primary coolant, this would be a release of about 133,000 Curies of radioiodine.

Once the faulted steam generator reaches atmospheric pressure, steam will continue to be generated, either in the primary system or in the steam generator, with the steaming rate governed by the decay heat being generated in the reactor core. (It can be safely assumed that the reactor coolant pumps will not be running at these lower pressures.) As discussed above, it will be assumed that this situation will continue for the next eight hours.

The decay heat (assuming 18 months of full power operation) will drop significantly over this interval, as shown in Table 3.197-4. As the table shows, the heat generation will drop by about a factor of three over this interval. In order to model this more realistically, this eight-hour "simmering" period will be divided into two intervals, consisting of a two-hour interval at 2% power, and a six-hour interval at 1% power. During the two-hour interval, the steaming rate corresponding to 2% power (68 MWt) is about 210,000 lb/hr. At one millicurie/gram, this is a release of 191,000 Curies. During the six-hour interval, the steaming rate corresponding to 1% power (34 MWt) is about 105,000 lb/hr. This would release about 286,000 Curies.

Consequence Estimate

As before, the consequences for the source term described above were estimated using the MACCS2 code and the standard site parameters for GI analysis. The results are given in Table 3.197-5.

Table 3.197-4

Time after shutdown	Percent of full power
10 minutes	2.33%
30 minutes	1.82%
1 hour	1.51%
2 hours	1.15%
4 hours	0.965%
6 hours	0.857%
8 hours	0.778%

Table 3.197-5

	Mean	**Median**	**95th percentile**
Total whole-body dose to 50 miles (person-rem)	10800	10000	19000
Thyroid dose to 50 miles (person-rem)	191000	163000	333000
Whole-body dose at site boundary (rem)	8.41	7.61	22.3
Thyroid dose at site boundary (rem)	260	255	709

(Again, the results in this table are given to three significant figures for the convenience of the reader who wishes to follow the calculations, and are not intended to imply that these parameters are known to this accuracy, as the percentile range given in the table itself clearly shows.)

Risk Assessment

The risk for each sequence is estimated simply by multiplying the frequency of the sequence by the consequences of that same sequence, to get a point estimate, as shown in Table 3.197-6. Again, the estimates are given to two significant figures to aid in following the calculations. It should be noted that the frequencies are uncertain to a factor of ten, but the consequences are uncertain to approximately a factor of two. Therefore, the uncertainty in the risk will be dominated by the uncertainty in the frequency.

Table 3.197-6

Sequence	**Frequency**	**Risk (person-rem/RY whole-body)**	**Risk (person-rem/RY thyroid)**
Main steam line break, downstream from MSIV	10^{-3} event/RY	4.6	79
Main steam line break, upstream from MSIV	10^{-4} event/RY	1.1	19

Nevertheless, the frequency and consequence estimates were combined to form a risk estimate using the SAPHIRE code package, to better estimate the uncertainties. The frequencies were assumed to be lognormal, uncertain to a factor of 10. The consequence figures used the results of the MACCS code. However, this analysis is bounding in the sense that the other parameters, e.g., the timing intervals and the iodine concentration in the primary coolant, were bounding values and not included in the uncertainty analysis. The results are shown in Table 3.197-7:

Table 3.197-7

Sequence		Mean	Median	5th percentile	95th percentile
Main steam line break downstream of MSIV	Total, whole-body person-rem/RY	4.6	1.6	0.15	18
	Person-rem/RY, thyroid	79	27	2.3	313
Main steam line break upstream of MSIV	Total, whole-body person-rem/RY	1.1	.37	0.032	4.4
	Person-rem/RY, thyroid	20	6.6	0.57	77
Combined, both MSLB sequences	Total, whole-body person-rem/RY	5.7	2.6	0.41	20
	Person-rem/RY, thyroid	97	44	6.8	339

In order to interpret these estimates, it should be noted that the screening criteria given in Management Directive (MD) 6.4 are based on total whole-body person-rem. However, the radiological doses calculated above are caused by radioactive iodine, which will be primarily a dose to the thyroid gland. A thyroid dose will not have the same health consequences as those of a whole-body dose, and therefore these calculated thyroid doses are not directly comparable to the screening criteria for GIs.

This problem was previously encountered in the screening of GI-III.A.1.3, "Maintain Supplies of Thyroid Blocking Agent (Potassium Iodide)," where PNL considered the differing health effects and the relatively high cure rate for thyroid dose, and recommended that the thyroid dose be reduced by a factor of 100 to be comparable to other risk analyses.

If the iodine dose is reduced by a factor of 100, in accordance with the method developed in GI-III.A.1.3, these risk estimates are well below the 100 person-rem per/RY threshold given in MD 6.4.

Cost Estimate

Because of the low risk, a cost estimate will not affect the conclusions of this analysis of this aspect. Therefore, no cost analysis was performed.

Other Considerations

Dilution of Coolant Activity in the Secondary System Liquid Inventory: Except for the initial blowdown in the non-isolatable break sequence (where the steam generator dries out), no credit was taken for dilution of the primary coolant by the liquid water in the secondary system. This was because the leaking primary coolant will be injected in the tube region, rather than through a feedwater sparger, and thus will emerge just below the steam separators. Moreover, the incoming primary coolant will likely be at a higher temperature than the surrounding secondary liquid, much of it will immediately flash to steam. Thus, dilution in the secondary liquid is not likely to be a significant mitigating factor.

Dilution of Coolant Activity in the Steam Space of the Secondary System: The secondary side steam volume is approximately 4030 cubic feet. Both accident sequences begin with a steam flow of approximately double the rated steam flow, which is 3.2E6 cubic feet/hour. At such flows, the time constant associated with the steam volume works out to about five seconds. This can make a modest difference for the 20-second "puff" in the first accident sequence, and thus is a source of some conservatism.

Hold-up Time in the Secondary System: The half life of I-131 is 8.02 days. Thus, hold-up time will not be a significant factor for this GI, which will last eight hours in the longest sequence.

Reduction in Specific Activity: Once the primary pressure drops and high pressure injection begins, the reactor water cleanup system will isolate, and removal of radioiodine by this system will stop. However, as the fuel pins equilibrate with the surrounding primary coolant, a point will come where no more iodine will be leached from the pins, and, as primary coolant escapes through the ruptured steam generator tubes and is replaced by ECCS water, the specific activity of the coolant in the primary system will diminish because of dilution.

The primary system liquid volume (according to the PWR training manual) is 11,892 cubic feet, including the pressurizer liquid volume and surge line. If the ECCS injection rate is 600 gpm (80.2 cubic feet/minute), the dilution time constant will be on the order of 150 minutes. This will be even longer if the operator throttles back the injection flow, as is likely to happen in the 8-hour sequence. Thus, neglecting this dilution does introduce modest amount of conservatism.

Time to Termination of the Event by Operator Action: An explicit analysis of the response of the operator, based on symptom-based procedures, has not been performed. Instead, the two-hour and eight-hour event durations were intended to envelope the total time needed.

Primary-to-secondary Leakage Rate: Except for the assumption of five ruptured tubes during the blowdown in the non-isolatable break sequence, the analysis assumes that the release rate to the atmosphere is limited by the safety and relief valve capacities and/or the steaming rate associated with decay heat. This is a conservative assumption, but it is also the postulated mechanism for this GI. Thus, the risk values given in this analysis should be understood as being contingent upon the reality of this assumption - that a steam line break will cause a major rupture of steam generator tubes.

B&W Plants: The numbers used above (system volumes and flow capacities) are reasonably typical for Westinghouse and Combustion Engineering systems. In contrast, the Babcock and Wilcox designs have a far lower secondary side volume in their steam generators. This is not likely to affect any conclusions, since no credit has been taken for dilution or holdup in this volume.

Should GI B-65 be Reexamined?: GI B-65, "Iodine Spiking," was concerned with the effects of iodine spiking after a spontaneous SGTR event in a PWR, or a steam line break in a BWR. It was given a "drop" priority based on a very low risk significance as estimated by an analysis performed in 1986. Should this issue be reexamined, at least for PWRs, assuming a larger spike?

The older analysis used a SGTR event frequency of 1.3E-3/RY and a spiking factor of 500, but based the spike on a "realistic" coolant specific activity, rather than on the TS limit of 1.0 μCi/g, which resulted in a peak specific activity of 60 μCi/g. More SGTR data has been accumulated since 1986. Regarding the frequency, several sources exist, as shown in Table 3.197-8:

Table 3.197-8

Original B-65 analysis (1986)		1.3E-3/RY
Adams, J.P., and Sattison, M.B., "Frequency and Consequences Associated with a Steam Generator Tube Rupture Event," Nuclear Technology, V. 90, pp. 168-185 (May 1990)		8E-3/RY
NUREG-1740[1861] (2001)	9 domestic events in 1615 domestic PWR-years	5.6E-3/RY

This analysis will use the Adams and Sattison frequency from the table above, which is based on an extensive data base.

The source term (for a primary coolant specific activity of one millicurie/gram, which is much higher than would be used in a standard SGTR analysis) is just the source term for the main steam line break downstream of the MSIV, but without the initial "puff" before the MSIV closes. The consequences for this sequence were estimated using the MACCS2 code. The results are shown in Table 3.197-9:

Table 3.197-9

	Mean	Median	95th percentile
Total whole-body dose to 50 miles (person-rem)	4,940	5,220	8650
Thyroid dose to 50 miles (person-rem)	85,400	86,900	154,000
Whole-body dose at site boundary (rem)	4.26	0.365	13.1
Thyroid dose at site boundary (rem)	68.2	2.33	217

(Results in this and in subsequent tables are given to three significant figures for the convenience of the reader who wishes to follow the calculations, and are not intended to imply that these parameters are known to this accuracy, as the percentile range given in the table itself clearly shows.) Thus, the point estimate risk associated with this spontaneous SGTR sequence is approximately as shown in Table 3.197-10:

Table 3.197-10

Sequence	Frequency	Risk (person-rem/RY whole-body)	Risk (person-rem/RY thyroid)
Spontaneous SGTR	8×10^{-3}event/RY	40	683

Again, an error analysis was performed to better quantify the uncertainties, as with the earlier sequences. The results are shown in Table 3.197-11.

This is significantly greater than the risk associated with the MSLB-initiated sequences evaluated earlier. However, these estimates assume a primary coolant activity of one millicurie per gram, and a major primary-to-secondary leak. Although it may be plausible for a SGTR caused by a main steam line break to cause a more severe iodine spike, actual SGTR events have never caused such a severe spike. Thus, these numbers are highly conservative, and should be viewed with appropriate caution. Nevertheless, if the iodine dose is reduced by a factor of 100, in accordance with the method developed in GI-III.A.1.3, these risk estimates are still below the 100 person-rem/RY threshold given in MD 6.4. Therefore, reopening GI B-65 does not appear to be warranted.

Table 3.197-11

Spontaneous SGTR Sequence	Mean	Median	5th percentile	95th percentile
Total, whole-body person-rem	40	14	1.2	156
Person-rem/RY, thyroid	680	230	20	2600

Consequential Fuel Failures: The analysis above is based entirely on iodine spiking caused by cladding defects already existing in the core. It does not include iodine released from fuel which may have experienced DNB-induced cladding failure in the course of the accident sequence, which involves rapid depressurization and possibly the interruption of forced circulation. This extra iodine was not included because the iodine released from fuel because of DNB failures will not be affected by TS limits on existing iodine concentration, nor will it be affected by a better phenomenological understanding of iodine spiking. Moreover, the radiological analysis of transients involving DNB is based on release of gap activity with no spiking model. DNB-induced releases are outside of the scope of this issue. Nevertheless, the possibility was explored. For the sequence initiated by a main steam line break downstream of the MSIV, DNB failures do not appear to be credible. The MSIVs will close (and cause the reactor to scram) well before pressure drops to saturation. Ultimately, pressure cannot drop below the pressure in the secondary system, which will be near the secondary safety valve setpoints.

DNB is more credible for the sequence where main steam line breaks upstream of its MSIV. However, unless a very large number of steam generator tubes fail, the primary system pressure will be very close to that of a standard MSLB event. A number of licensing basis MSLB analyses were examined, covering a spectrum of Westinghouse, Combustion Engineering, and Babcock and Wilcox designs. None of these analyses predicted DNB-induced fuel failure.

Thyroid Dose vs. Total Whole-Body Dose: In converting the thyroid dose into an equivalent total whole-body dose to compare to the screening criteria, a method developed by PNL in the analysis of GI-III.A.1.3, "Maintain Supplies of Thyroid Blocking Agent (Potassium Iodide)," was used. The PNL method considered both the differing health effects and the relatively high cure rate for thyroid disease, and recommended that the thyroid dose be reduced by a factor of 100 to be comparable to other risk analyses.

In contrast to this, the organ dose weighting factor for the thyroid in 10 CFR 20.1004 is 0.03, rather than the factor of 0.01 that is implied by the PNL rationale. Use of this weighting factor would increase the risk estimates developed above, but the results would still be below the screening criteria, and thus there would be no change in any conclusions.

CONCLUSION

Because of the low risk significance of this aspect of the issue, this issue should not be continued as a safety issue. There is no evidence that the current regulatory approach is not bounding, even in the event of a combined main steam line break and SGTR. The current regulatory approach to iodine spiking, in spite of its empirical nature, is adequate.

2. BURDEN REDUCTION ASPECT

As was brought out in the ACRS members' discussion, the current regulatory treatment of iodine spiking appears to be quite conservative when viewed from the aspect of public risk. It follows very naturally to ask if perhaps the current treatment could be relaxed if there were a better understanding of the actual physical and chemical phenomena involved in iodine spiking.

The current criteria are based on standard licensing practice: a conservative, bounding calculation, with the results evaluated against acceptance criteria. In this case, the acceptance criteria are given by 10 CFR 100, "Reactor Site Criteria," Section 11, "Determination of Exclusion Area, Low Population Zone, and Population Center Distance." This regulation requires that the exclusion area size be large enough that "an individual located at any point on its boundary for two hours immediately following the onset of the postulated fission product release would not receive a total radiation dose to the whole body in excess of 25 rem or a total radiation dose of 300 rem to the thyroid from iodine exposure." A footnote to this section goes on to explain that these doses correspond to allowable once-in-a-lifetime accidental exposures for radiation workers, but that these limits are not intended to imply that such doses are permissible for members of the public, but instead are to be used for evaluation "with respect to potential reactor accidents of exceedingly low probability of occurrence, and low risk of public exposure to radiation." SGTRs and even steam line breaks are not "exceedingly low" probability events, and this is presumably the reason the SRP[11] requires these events to result in a "small fraction of the 10 CFR Part 100 Guidelines." (The SGTR SRP[11] explicitly uses 10% for "small fraction.") The exception is the case of the pre-existing iodine spike, which is a lower-probability situation, and is held not to a small fraction, but the full limit.

In contrast to this, the GI screening criteria in MD 6.4 are based on CDF and LERF, neither of which are applicable to this GI, and public risk. This risk measure is not risk to the most-exposed individual, but instead is total public risk, summing the person-rem over the entire population from the exclusion area boundary out to a radius of 50 miles, and multiplying it by the event frequency to get person-rem/year. For burden reduction issue such as this, where no severe core damage accidents are involved, the only screening criterion is cost-effectiveness.

For any given accident scenario, a low public risk (per year, integrated out to a radius of 50 miles) usually implies a low individual exposure (i.e., per event, and to the most exposed individual, generally located at the exclusion area boundary). However, it should be noted that these are two separate criteria. Although a low public risk may justify investigation into the possibility of burden reduction, the limits on dose to the most exposed individual must still be met.

The licensing model, as was discussed previously, does not yield a "spike," where the iodine activity rises to a peak and then falls off. Instead, the model assumes that the removal processes stop, and iodine activity builds up linearly for the assumed 8-hour duration of the event. This is not as conservative as it might first appear. The dominant removal mechanism is likely to be via the primary coolant cleanup system, which might well isolate during the course of the accident, leaving only radioactive decay as a removal mechanism. Other assumptions in the SRP[11] (e.g., on iodine transport, primary-to-secondary leak rates, etc.) do not appear to be excessively conservative.

The primary candidate for any excessive conservatism is then in the factor of 500 multiplier on the iodine release rate from the fuel. According to the historical data compiled by Adams and Atwood (see table in previous section), the maximum observed release rate was 5.53E3 Ci/hour, and the 95th percentile was 1.18E3 Ci/hour. (Both of these figures have already been increased by a factor of three to allow for the fact that the activity may not have been measured at the peak of the spike.) If these two figures are divided by the "typical" equilibrium release rate of 12.38 Ci/hour (corresponding to a specific activity at the 1 μCi/gram limit), the results are multipliers of 447 (maximum ever) and 95 (95th percentile), respectively. Thus, the factor of 500 does appear to be more than bounding. Moreover, in reality the release rate is not likely to remain constant, but would be expected to fall off with time as the inventory of available soluble iodine compounds in the fuel decreases.

It should be noted that the Regulatory Guide 1.183,[1865] which provides guidance on acceptable applications of alternative source terms, uses a multiplier of 335 rather than 500. Another approach[1866] suggested that, instead of using bounding assumptions, an integrated probabilistic analysis be used for the SGTR and MSLB evaluations, and that the acceptance criterion be that the probability of exceeding the 300 rem thyroid dose be small (e.g., 1%).

Burden Reduction Significance

As was stated above, the accident and transient analyses upon which a plant's TS are based must assume both a pre-existing iodine spike and an iodine spike induced by the accident or transient being analyzed. The calculated radiological consequences must be less than the 10 CFR Part 100 guidelines, (for the pre-existing spike), or 10% of the 10 CFR Part 100 guidelines (for the induced spike). The 10 CFR Part 100 guidelines, in effect, limit the dose to a hypothetical individual located just outside the exclusion area boundary to 300 rem to the thyroid from iodine exposure for two hours immediately following onset of the release. This translates into a TS limiting the specific activity of dose-equivalent I-131 in the primary coolant (usually one microcurie per gram). The standard TS call for the specific activity to be monitored at least every 14 days during steady-state operation, but measured between two to six hours after a significant power change. If the specific activity rises above this limit, the reactor must be shut down if the specific activity is not brought back down to the limit within a specified completion time (48 hours), or if the specific activity rises above a higher, power-dependent operating limit.

The actual specific activity in the coolant is governed by the release rate from leaking fuel, which is independent of the existing specific activity in the coolant, and by the removal rate by radioactive decay and by the cleanup system, both of which are proportional to the existing specific activity in the coolant. For any given release rate, the specific activity will climb until the removal rate matches the release rate. Thus, it is desirable to have a low incidence of leaking fuel, few power or pressure transients, and cleanup systems in good working order. Overly strict limits on iodine specific activity could lead to excessive monitoring and surveillance, or even limit operational flexibility.

Burden Estimate

The next question is, how great is the burden on a licensee? There is not sufficient information available to perform a formal analysis with uncertainties. However, a simple point-estimate analysis was performed to provide some perspective on the regulatory burden.

It is illustrative to note that, in the 168 events documented by Adams and Atwood (Adams, J.P., and Atwood, C.L., "Probability of the Iodine Spike Release Rate During an SGTR," *Transactions of the American Nuclear Society,* V. 61, pp. 239-240, June 1990), the mean pre-trip measured iodine specific activity in the coolant was 0.049 μCi/gm, which is about a factor of 20 below the 1 μCi/gm TS limit. The 95th percentile was 0.181 μCi/gram, and the maximum recorded in this database was 0.564 μCi/gram. Although 168 events do not constitute a large sample, it does not appear that plant operators are having too much difficulty keeping this specific activity within the limit during normal operation.

To supplement this information, a search of the NRC LER database was made for any report with the word "iodine" in the title. The search produced 32 events, all in the interval from February 1984 to September 1988. This rather confined interval is partially explained by the fact that the searchable database begins with January 1984. Moreover, one report mentioned that, on June 25, 1986, "the NRC approved a TS amendment which deleted the reporting requirement of TS 3.4.7.A." Thus, the lack of events in later years may be due to the lack of reporting requirements.

Of the 32 events in the database, 22 appear to be spiking caused by either a planned shutdown or a shutdown necessitated by a need for repair or to address an external event (e.g., an impending hurricane). Moreover, many of the spiking events were clustered at the same plant and during the same fuel cycle. The LERs themselves acknowledged that there was some failed fuel in the core, and that the spiking events kept occurring at that plant until the fuel was replaced. Thus, maintaining the iodine specific activity below the limit during steady-state operations does not appear to be problematic. Difficulties are not likely to arise unless there are a significant number of cladding defects in the core, or problems develop in the primary coolant cleanup system.

Personnel exposure does not appear to be a problem. After cooldown, detensioning of the studs, removal of the vessel head, and all the other activities likely to occur before plant personnel is exposed to primary coolant, the spike will have largely decayed away. Residual activity in the coolant under such circumstances is probably best addressed by reducing cladding defects, not by studying the iodine spiking phenomenon.

Generation of extra radwaste in the cleanup system is also not likely to be a major problem, since the relatively short half-life of the iodine isotopes will reduce the activity to negligible amounts long before disposal of the ion exchange resins becomes a problem.

However, a post-trip iodine spike may delay recovery and return to power operation, since it will take some time for the cleanup system to restore the coolant specific activity to within limits. This could cause an economic burden. However, the situation is not likely in the absence of defected fuel cladding, and fuel performance has been improving over the years. Also, if the spiking occurs because of a planned shutdown, where there is no intention of an immediate return to power operation, the spike in iodine activity has little economic consequence.

According to NUREG/CR-5750,[1760] the frequency of general transients (involving a plant trip) at domestic PWRs is 1.2 events/PWR per year of criticality. The same reference used a 75% criticality figure, so this translates to 1.6 events/PWR per calendar-year. However, not every plant trip results in an iodine spike. According to data presented at the Commission meeting of February 24, 2005, about 80% of the plants are reporting zero defects in recent years. This implies that only 20% of the plant trips will result in an iodine spike, which gives a spiking frequency of about 0.32 spike/PWR-year.

Not every spike is severe enough to cause a problem. The next question is to determine how severe a spike would have to be to cause a delay in return to power. A literature search produced no information on the time normally needed to recover from a scram and return to power. However, conversations with some former operating personnel indicated that, although technically it is possible to return a plant to full power within 12 hours or so, in reality it takes 18 to 24 hours. Besides the time required to pull the rods, etc., the plant personnel must first diagnose the reason for the scram and make sure that the plant is in a state where restart is allowable, all of which must be documented on paper.

However, the Standard TS allow operation to continue provided that the iodine activity is brought back within the 1 μCi/gram limit within 48 hours after the last measurement. (The specification explicitly exempts this LCO from the usual requirement that the iodine activity be within the limit prior to entering Modes 1, 2, or 3.) Thus, although the plant could probably be returned to power operation, a problem would be encountered if the iodine activity were too high to be brought back to within limits in 48 hours. In theory, the plant would have to be shut down again. In practice, the plant operators would probably delay restart until they were reasonably sure that the iodine activity was dropping sufficiently to avoid a problem later.

If the spike is at maximum before four hours after the scram, which is usually the earliest point where the activity is measured, then the activity as a function of time can be approximated by:

$$A(t) \approx A_{Measured} e^{-\gamma_t t}$$

for times after the measurement at four hours. If λ_t = 0.04552/hour, t = 48 hours, and A(48 hours) is to be 1 μCi/gram, then it is straightforward to estimate that the activity at the time of measurement (four hours after the scram) would be about 8.89 μCi/gram. (Results are given to three significant figures for the convenience of the reader who wishes to follow the calculations, and are not intended to imply that these parameters are known to this accuracy.)

Examination of the Adams/Atwood database shows that 2 of the 168 observed spikes (about 1.2% of the total) have exceeded this value. Thus, it is estimated that about 1.2% of the 0.32 anticipated spike/PWR-year will result in a delay in return to power, which gives a frequency of delayed restart of 0.0038 delay/PWR-year.

The delays in scram recovery associated with such spiking events will vary in length. To estimate the average extra delay, the time to reach the TS limit of 1 μCi/gram was calculated for the 2 events in the database where the max activity exceeded 8.89 μCi/gram. The result was an average time of 53.4 hours to decay from the time of measurement down to the permissible 1 μCi/gram. If operation is restricted after 48 hours, the average delay is about 5.4 hours.

According to NUREG/BR-0184,[1864] the cost of replacement power is $480,000/day. At this rate, the cost of a 5.4 hour delay in restart is $108,000. (These and subsequent dollar estimates are cast in 1993 dollars, which was current for NUREG/BR-0184,[1864] and also current for the regulatory policy placing a value of $2,000 on a person-rem.) Thus, the annualized burden is 0.0038 delay/PWR-year times $108,000/delay, which is $410/PWR-year.

There are currently 69 operating PWRs, with a remaining licensed lifetime of approximately 1020 PWR-years. Thus, $410/PWR-year implies a national burden of about $28,000/year, with a future lifetime burden of about $420,000 with no license renewal. A 20-year license renewal for these plants would extend this burden to about a $1M.

Risk Worth

The burden estimate needs to be balanced against the averted risk associated with the current limits on iodine activity in the primary coolant. Although both the SGTR accident and the main steam line break accident are based on the maximum permissible coolant activity, generally the SGTR analysis is the limiting analysis. As was discussed above in the section on GI B-65, the source term (for a primary coolant specific activity of one millicurie per gram and a full double-ended break of a steam generator tube) is just the source term for the main steam line break downstream of the MSIV, but without the initial "puff" before the MSIV closes. The consequences for this sequence were estimated using the MACCS2 code. The results are given in Table 3.197-12. (Results in this and subsequent tables are given to three significant figures for the convenience of the reader who wishes to follow the calculations, and are not intended to imply that these parameters are known to this accuracy, as the percentile range given in the table itself clearly shows.) This is a highly conservative, bounding result. In order to make a more realistic estimate, this estimate must be scaled down, specifically to account for the coolant activity and the primary-to-secondary leak rate. Regarding coolant activity, the data from the Adams/Atwood data in Table 3.197-1 was considered.

Table 3.197-12

	Mean	Median	95th percentile
Total whole-body dose to 50 miles (person-rem)	4,940	5,220	8,650
Thyroid dose to 50 miles (person-rem)	85,400	86,900	15,4000
Whole-body dose at site boundary (rem)	4.26	0.365	13.1
Thyroid dose at site boundary (rem)	68.2	2.33	217

Based on the 168 events in this database, the mean iodine release rate from the fuel to the coolant was 2.61E2 Ci/hour. In 8 hours, and assuming cleanup system isolation and a primary coolant mass of 2.52E8 grams, this would result in a primary coolant specific iodine activity of about 8.3 μCi/g. The MACCS2 results, which were based on 1 μCi/g, should then be reduced by a factor of 8.3/1000, or 0.0083. Using this scaling factor, the mean thyroid dose drops from 85400 person-rem to about 710 person-rem. The frequency of SGTR events can be estimated from several studies, as shown in Table 3.197-13.

Table 3.197-13

Original B-65 analysis (1986)		1.3E-3/RY
Adams, J.P., and Sattison, M.B., "Frequency and Consequences Associated with a Steam Generator Tube Rupture Event," *Nuclear Technology*, V. 90, pp. 168-185, May 1990.		8E-3/RY
NUREG-1150[1081] PRAs: NUREG/CR-4551 (1992)		1E-2/RY
NUREG/CR-5750 [1760](1999)		7E-3/RY (critical)
NUREG-1740 [1861] (2001)	9 domestic events in 1615 domestic PWR-years	5.6E-3/RY

As can be seen, these sources do not vary greatly. The NUREG-1150[1081] PRA value will be used, recognizing that this introduces a small conservatism. Thus, the point estimate risk associated with this spontaneous SGTR sequence is approximately 7.1 person-rem thyroid/RY.

As before, this risk can be divided by 100 to get an equivalent whole-body dose, then multiplied by $2,000/person-rem to get an equivalent cost. The result is $140/RY, which is about 1/3 of the estimated industry burden of $410/PWR-year. The net industry burden is then approximately $270/PWR-year.

Implementation Cost

According to NUREG/BR-0184[1864] and the material referenced therein, a non-controversial amendment to an existing rule or regulation implementation would incur NRC costs of approximately $122,000. A model TS amendment would incur approximately $18,000 in licensee costs. Both of these costs are one-time, up-front expenditures, with no continuing operating costs.

Overall Net Burden

Currently, there are 69 PWRs operating, with a remaining lifetime of approximately 1020 PWR-years. Thus, an "average" plant has 15 years of remaining license lifetime. The annualized potential

savings for such a plant would be $410 due to averted delays in restarts, less $140 due to the risk worth of the SGTR scenario, giving a net annualized savings of $270/year. Over 15 remaining years of operation, discounted at 7% (as recommended in NUREG/BR-0184,[1864] the cumulative savings would be $2,560. (Without the discounting, this would be just 15 years times $270/year, to give $4,050.) This is not enough to cover the administrative cost ($18,000) of a TS amendment, even without discounting.

Discussion

It should be noted that the low risk worth does not imply that the current TS on iodine spiking are unnecessary. The current limits are based on limiting the risk to the most-exposed individual in the vicinity of the plant, not the societal risk to the surrounding population. The only purpose of the risk worth estimate is for the cost/benefit calculation.

The regulatory burden for any plant for one year is quite small. This is at least partly due to the diligence on the part of the industry in reducing the number of inadvertent plant trips, and to continued improvements in fuel fabrication which have reduced the incidence of cladding defects. Nevertheless, this residual burden does rise to more significant levels when added over 69 operating PWRs. Even so, the administrative costs of a TS amendment are greater than the potential burden reduction. Even if there were no discounting, with an annualized net potential savings of $270/year, it would take 66 years of operation to pay for the TS amendment.

The recommendation[1862] made by the ACRS was "to take advantage of iodine studies available in the literature and develop a mechanistic understanding of the phenomenon." Developing a better understanding of the phenomenon would unquestionably provide a more satisfactory basis for iodine activity limits than that provided by the current empirical approach. However, as stated in Part II of the MD 6.4 Handbook , "Only GIs that potentially involve adequate protection, substantial safety enhancement, or reduction in unnecessary regulatory burden are included in the Generic Issues Program." Although pursuit of a better understanding of the iodine spiking phenomenon would undoubtedly be good science, such a program must be linked to one of the three GI aspects, adequate protection, substantial safety enhancement, or reduction in unnecessary regulatory burden, to be part of the Generic Issues program. Because of its low risk significance, and because there is no evidence that the existing regulatory approach results in inadequate safety, the only aspect relevant to the Generic Issues program is that of unnecessary regulatory burden. Even for this aspect, the burden appears to be relatively modest. Moreover, a better understanding of the spiking phenomenon would not necessarily result in any change in the regulatory burden.

Other Considerations

Other Benefits: As was stated above, a better understanding of the phenomenon of iodine spiking, particularly regarding the rate of release from the fuel, how this rate might diminish with time, and the relationship to activity currently in the coolant at equilibrium conditions, would provide a more satisfactory basis for iodine activity limits than that provided by the current empirical approach. In particular, a better scientific understanding would have the effect of increasing public confidence in the regulatory approach to iodine spiking. Although the Generic Issues Program screening criteria do not address such a benefit, this does not mean that such a benefit is not a legitimate basis for research. Thus, if it is decided that this GI should not be pursued as part of the Generic Issues Program, it may still be a legitimate candidate for another research program.

Thyroid Dose vs. Total Whole-Body Dose: Again, in converting the thyroid dose into an equivalent total whole-body dose to compare to the screening criteria, a method developed by PNL in the

analysis of GI-III.A.1.3, "Maintain Supplies of Thyroid Blocking Agent (Potassium Iodide)," was used. The PNL method considered both the differing health effects and the relatively high cure rate for thyroid disease, and recommended that the thyroid dose be reduced by a factor of 100 to be comparable to other risk analyses.

In contrast to this, the organ dose weighting factor for the thyroid in 10 CFR 20.1004 is 0.03, rather than the factor of 0.01 that is implied by the PNL rationale. Use of this weighting factor would triple the risk worth to be subtracted from the potential burden reduction. Ironically, this would make the burden reduction and the risk worth almost equal, making the burden cost-effective, and the screening comparison moot. Regardless, there would be no change in any conclusions.

Iodine Spiking in BWRs: Obviously, SGTR events are not applicable to BWRs. Nevertheless, BWR fuel can release iodine to the primary coolant after a transient, which can cause a spike in primary coolant activity in a manner similar to that of a PWR. This iodine could be carried via the steam lines to the turbine and main condenser, and be discharged from the plant stack. However, iodine input into the offgas system is small because of its retention in reactor water (in the reactor vessel) and in condensate (in the hotwell). What iodine does enter the offgas system will be treated, e.g., the RECHAR system most commonly used in BWRs contains a charcoal bed which will effectively remove the iodine by adsorption. Iodine which re-dissolves in the condensate will be largely removed by the condensate demineralizers before returning to the reactor via the feedwater system. Moreover, in a BWR, once the MSIVs close, decay heat is accommodated by S/RVs discharging steam to the suppression pool within primary containment. There is no periodic release of steam to the environment.

For this reason, iodine control in BWRs is effected not only by restrictions on activity in the primary coolant, but also by TS limits on the release rates from the main stack and the building exhaust vents. The BWR standard TS do not explicitly address spiking as is the case for a PWR. Thus, this GI does not apply to BWRs.

Conclusion

Because of the low potential burden reduction associated with this aspect of the issue, this issue should not be continued as a burden reduction issue.

DISCUSSION

An investigation of iodine deposition and transport, resulting in a better mechanistic understanding of the iodine spiking phenomenon, would unquestionably be valid and valuable basic science, and should be encouraged. However, the low risk significance associated with this issue implies that the issue is not a good candidate for the expenditure of resources that are specifically targeted for improving safety. Moreover, the regulatory burden associated with this issue is smaller than the administrative costs required for any alleviation. Thus, it is recommended that this subject be considered for university grants or other basic science programs, rather than being pursued in the Generic Issues Program.

CONCLUSION

Based on the risk estimates and other considerations discussed above for both the safety and burden reduction aspects of GI-197, the issue was dropped from further consideration.[1867]

REFERENCES

11. NUREG-0800, "Standard Review Plan for the Review of Safety Analysis Reports for Nuclear Power Plants," U.S. Nuclear Regulatory Commission, (1st Edition) November 1975, (2nd Edition) March 1980, (3rd Edition) July 1981.

32. NUREG-0138, "Staff Discussion of Fifteen Technical Issues Listed in Attachment to November 3, 1976 Memorandum from Director, NRR to NRR Staff," U.S. Nuclear Regulatory Commission, November 1976.

64. NUREG/CR-2800, "Guidelines for Nuclear Power Plant Safety Issue Prioritization Information Development," U.S. Nuclear Regulatory Commission, February 1983, (Supplement 1) May 1983, (Supplement 2) December 1983, (Supplement 3) September 1985, (Supplement 4) July 1986, (Supplement 5) July 1996.

860. NUREG-0937, "Evaluation of PWR Response to Main Steamline Break With Concurrent Steam Generator Tube Rupture and Small-Break LOCA," U.S. Nuclear Regulatory Commission, December 1982.

1081. NUREG-1150, "Severe Accident Risks: An Assessment for Five U.S. Nuclear Power Plants," U.S. Nuclear Regulatory Commission, (Vol. 1) December 1990, (Vol. 2) December 1990, (Vol. 3) January 1991.

1318. NUREG/CR-4550, "Analysis of Core Damage Frequency from Internal Events," U.S. Nuclear Regulatory Commission, (Vol. 1, Rev. 1) January 1990, (Vol. 2) April 1989, (Vol. 3, Rev. 1) April 1990, (Vol. 4, Rev. 1) August 1989, (Vol. 5, Rev. 1) April 1990, (Vol. 6) April 1987, (Vol. 7, Rev. 1) May 1990.

1475. NUREG-1477, "Voltage-Based Interim Plugging Criteria for Steam Generator Tubes," U.S. Nuclear Regulatory Commission, (Draft) June 1993.

1759. NUREG/CR-5640, "Overview and Comparison of U.S. Commercial Nuclear Power Plants," U.S. Nuclear Regulatory Commission, September 1990.

1760. NUREG/CR-5750, "Rates of Initiating Events at U.S. Nuclear Power Plants: 1987-1995," U.S. Nuclear Regulatory Commission, February 1999.

1860. Memorandum to F. Eltawila from M. Gamberoni, "Proposed Generic Issue: Iodine Spiking Phenomena," July 22, 2004.

1861. NUREG-1740, "Voltage-Based Alternative Repair Criteria: A Report to the Advisory Committee on Reactor Safeguards by the Ad Hoc Subcommittee on a Differing Professional Opinion," U.S. Nuclear Regulatory Commission, March 2001.

1862. Letter to W. Travers from M. Bonaca, "Resolution of Certain Items Identified by the ACRS in NUREG-1740, 'Voltage-Based Alternative Repair Criteria,'" May 21, 2004.

1864. NUREG/BR-0184, "Regulatory Analysis Technical Information Handbook," U.S. Nuclear Regulatory Commission, January 1997.

1865. Regulatory Guide 1.183, "Alternative Radiological Source Terms for Evaluating Design Basis Accidents at Nuclear Power Reactors," U.S. Nuclear Regulatory Commission, July 2000.

1866. Memorandum to A. Thadani, et al., from M. Hodges, "Reassessment of the Assumptions and Proposed Alternative Method for Determining Radiological Consequences of Main Steam Line Break and Steam Generator Tube Rupture," June 7, 1996.

1867. Memorandum to C. Paperiello from J. Uhle, "Results of Initial Screening of Generic Issue 197, 'Iodine Spiking Phenomena,'" May 8, 2006.

REFERENCES

* [Accession Numbers] are provided for easy retrieval of those documents that are accessible from the NRC Nuclear Documents System Advanced Design (NUDOCS/AD) or the Agencywide Documents Access and Management Systems (ADAMS)

1. SECY-81-513, "Plan for Early Resolution of Safety Issues," August 25, 1981. [8109140067]

2. NUREG-0371, "Task Action Plans for Generic Activities (Category A)," U.S. Nuclear Regulatory Commission, November 1978.

3. NUREG-0471, "Generic Task Problem Descriptions (Categories B, C, and D)," U.S. Nuclear Regulatory Commission, June 1978.

4. NUREG-0572, "Review of Licensee Event Reports (1976-1978)," U.S. Nuclear Regulatory Commission, September 1979.

5. IE Circular No. 77-07, "Short Period During Reactor Startup," U.S. Nuclear Regulatory Commission, April 15, 1977. [9104240445]

6. IE Bulletin No. 79-12, "Short Period Scrams at BWR Facilities," U.S. Nuclear Regulatory Commission, May 31, 1979. [7906060168]

7. Memorandum for D. Ross from H. Richings, "RDA Statistical Analysis," June 17, 1975. [8105050833]

8. SECY-80-325, "Special Report to Congress Identifying New Unresolved Safety Issues," July 9, 1980. [8103180932]

9. Federal Register Notice 54 FR 16030, "Draft Regulatory Guide; Withdrawal," April 20, 1989.

10. NUREG/CR-3992, "Collection and Evaluation of Complete and Partial Losses of Off-Site Power at Nuclear Power Plants," U.S. Nuclear Regulatory Commission, February 1985.

11. NUREG-0800, "Standard Review Plan for the Review of Safety Analysis Reports for Nuclear Power Plants," U.S. Nuclear Regulatory Commission, (1st Edition) November 1975, (2nd Edition) March 1980, (3rd Edition) July 1981.

12. Draft Regulatory Guide and Value/Impact Statement, Task SC 708-4, "Qualification and Acceptance Tests for Snubbers Used in Systems Important to Safety," U.S. Nuclear Regulatory Commission, February 1981. [9503290322]

13. NUREG-0691, "Investigation and Evaluation of Cracking Incidents in Piping in Pressurized Water Reactors," U.S. Nuclear Regulatory Commission, September 1980.

14. ASME Boiler and Pressure Vessel Code, Section XI, "Rules for Inservice Inspection of Nuclear Power Plant Components," American Society of Mechanical Engineers, 1974.

15. Nuclear Safety, Vol. 14, No. 3, 'Probability of Damage to Nuclear Components Due to Turbine Failure," S. H. Busch, 1973.

16. WASH-1400 (NUREG-75/014), "Reactor Safety Study, An Assessment of Accident Risks in U.S. Commercial Nuclear Power Plants," U.S. Atomic Energy Commission, October 1975.

17. NUREG/CR-0255, "CONTEMPT-LT/028: A Computer Code for Predicting Containment Pressure-Temperature Response to a Loss-of-Coolant Accident," U.S. Nuclear Regulatory Commission, March 1979.

18. Regulatory Guide 1.46, "Protection Against Pipe Whip Inside Containment," U.S. Atomic Energy Commission, May 1973. [7907100189]

19. NUREG-0588, "Interim Staff Position on Environmental Qualification of Safety-Related Electrical Equipment," U.S. Nuclear Regulatory Commission, November 1979, (Rev. 1) July 1981.

20. Memorandum for R. Fraley from R. Mattson, "ACRS PWR Question Regarding Effect of Pressurizer Heater Uncovery on Pressurizer Pressure Boundary Integrity," November 5, 1979. [8004100530]

21. Regulatory Guide 1.96, "Design of Main Steam Isolation Valve Leakage Control Systems for Boiling Water Reactor Nuclear Power Plants," U.S. Nuclear Regulatory Commission, (Rev. 1) June 1976. [7907100349]

22. Memorandum for H. Denton from C. Michelson, "BWR Jet Pump Integrity," May 23, 1980. [8006180872]

23. Memorandum for Distribution from W. Minners, "Generic Issues Screening Activity," September 30, 1981. [8110190695]

24. IE Bulletin No. 79-27, "Loss of Non-Class IE Instrumentation and Control Power System Bus During Operation," U.S. Nuclear Regulatory Commission, November 30, 1979. [7910250499]

25. Memorandum for F. Schroeder from T. Novak, "Application of SRP 15.4.6 Acceptance Criteria to Operating Reactors," December 12, 1980. [8102260305]

26. IE Information Notice 80-34, "Boron Dilution of Reactor Coolant During Steam Generator Decontamination," U.S. Nuclear Regulatory Commission, September 26, 1980. [8008220239]

27. Memorandum for R. Baer from A. Thadani, "RRAB Preliminary Assessment of the Reactor Coolant Pump Seal Failure Problem," December 12, 1980. [8103050765]

28. Memorandum for T. Novak from P. Check, "Spurious Automatic Switchover of ECCS from the Injection Mode to the Recirculation Mode," January 21, 1981. [8102280446]

29. Memorandum for T. Novak, et al., from A. Thadani, "Comparative Risk Assessment of ECCS Functional Switchover Options," April 1, 1981. [8104130436]

30. Memorandum for G. Lainas, et al., from P. Check, "BWR Scram Discharge System Safety Evaluation," December 1, 1980. [8101190514]

31. Memorandum for H. Denton from M. Ernst, "DST Evaluation of the Automatic Air Header Dump on Boiling Water Reactors," December 8, 1980. [8101230203]

32. NUREG-0138, "Staff Discussion of Fifteen Technical Issues Listed in Attachment to November 3, 1976 Memorandum from Director, NRR to NRR Staff," U.S. Nuclear Regulatory Commission, November 1976.

33. Memorandum for B. Sheron from M. Srinivasan, "Probabilities and Consequences of LOCA/Loss of Offsite Power (LOOP) Sequences," April 13, 1982. [8206300420]

34. Memorandum for the Commissioners from W. Dircks, "Resolution of Issue Concerning Steam-line Break with Small LOCA," December 23, 1980. [8101150357]

35. Memorandum for S. Hanauer from T. Murley, "Diesel Generator Loading Problems Related to SIS Reset on Loss of Offsite Power," February 25, 1981. [8110190723]

36. Memorandum for C. Michelson from H. Denton, "Combination Primary/Secondary System LOCA," December 8, 1981. [8201200049]

37. NUREG/CR-2083, "Evaluation of the Threat to PWR Vessel Integrity Posed by Pressurized Thermal Shock Events," U.S. Nuclear Regulatory Commission, October 7, 1981.

38. "Generic Issues Tracking System Report," U.S. Nuclear Regulatory Commission, December 17, 1981.

39. NUREG/CR-1707, "BWR Refill-Reflood Program, Task 4.2 - Core Spray Distribution Final Report," U.S. Nuclear Regulatory Commission, March 1981.

40. NEDO-24712, "Core Spray Design Methodology Confirmation Tests," General Electric Company, August 1979.

41. Nuclear Safety, Vol. 11, No. 4, pp. 296-308, "Tornado Considerations for Nuclear Power Plant Structures Including the Spent Fuel Storage Pool," P. L. Doan, July 1970.

42. Regulatory Guide 1.76, "Design Basis Tornado for Nuclear Power Plants," U.S. Nuclear Regulatory Commission, April 1974. [7907100297]

43. Regulatory Guide 1.117, "Tornado Design Classification," U.S. Nuclear Regulatory Commission, June 1976, (Rev. 1) April 1978 [7907110104].

44. NUREG-0705, "Identification of New Unresolved Safety Issues Relating to Nuclear Power Plant Stations," U.S. Nuclear Regulatory Commission, March 1981.

45. ANSI/ANS-58.8, "Time Response Design Criteria for Nuclear Safety Related Operator Actions," American Nuclear Society, 1984.

46. NRC Memorandum and Order CLI-80-21, May 27, 1980. [8007280084]

47. Memorandum for H. Denton from C. Michelson, "Degradation of Internal Appurtenances in LWR Piping," January 19, 1981. [8102020069]

48. NUREG-0660, "NRC Action Plan Developed as a Result of the TMI-2 Accident," U.S. Nuclear Regulatory Commission, May 1980, (Rev. 1) August 1980.

49. ISA S67.04 (ANSI N719), Draft F, "Setpoints for Nuclear Safety-Related Instrumentation Used in Nuclear Power Plants," Instrument Society of America, May 22, 1979.

50. Draft Regulatory Guide and Value/Impact Statement, TASK IC 010-5, "Proposed Revision 2 to Regulatory Guide 1.105, Instrument Setpoints," U.S. Nuclear Regulatory Commission, December 1981. [8112230003]

51. Memorandum for C. Michelson from H. Denton, "BWR Jet Pump Integrity," July 11, 1980. [8009160606]

52. IE Bulletin No. 80-07, "BWR Jet Pump Assembly Failure," U.S. Nuclear Regulatory Commission, April 4, 1980. [8002280648]

53. SIL No. 330, "Jet Pump Beam Cracks," General Electric Company/BWR Product Service, June 9, 1980.

54. NUREG/CR-1659, "Reactor Safety Study Methodology Applications Program," U.S. Nuclear Regulatory Commission, (Vol. 1) April 1981, (Vol. 2) May 1981, (Vol. 3) June 1982, (Vol. 4) November 1981.

55. Regulatory Guide 1.97, "Instrumentation for Light-Water-Cooled Nuclear Power Plants to Assess Plant and Environs Conditions During and Following an Accident," U.S. Nuclear Regulatory Commission, December 1975, (Rev. 1) August 1977 [8001240572], (Rev. 2) December 1980 [7912310387], (Rev. 3) May 1983 [8502060303].

56. Memorandum for R. Mattson, et al., from R. DeYoung, "Draft Report of Completion of Generic Activity A-34," March 28, 1979. [7904180060]

57. NUREG-0578, "TMI-2 Lessons Learned Task Force Status Report and Short-Term Recommendations," U.S. Nuclear Regulatory Commission, July 1979.

58. Memorandum for Commissioner Ahearne from H. Denton, "Instrumentation to Follow the Course of an Accident," September 4, 1979. [8005140362]

59. NUREG-0422, "SER for McGuire Nuclear Station Units 1 and 2," U.S. Nuclear Regulatory Commission, March 1978.

60. NUREG-0606, "Unresolved Safety Issues Summary," U.S. Nuclear Regulatory Commission, Vol. 7 No. 3, August 1985.

61. Memorandum for J. Murphy from B. Sheron, "Documentation of Generic Safety Issues on Degraded Voltage Protection," July 13, 1994. [9407250133]

62. NUREG/CR-2136, "Effects of Postulated Event Devices on Normal Operation of Piping Systems in Nuclear Power Plants," U.S. Nuclear Regulatory Commission, May 1981.

63. NUREG/CR-2189, "Probability of Pipe Fracture in the Primary Coolant Loop of a PWR Plant," U.S. Nuclear Regulatory Commission, September 1981.

64. NUREG/CR-2800, "Guidelines for Nuclear Power Plant Safety Issue Prioritization Information Development," U.S. Nuclear Regulatory Commission, February 1983, (Supplement 1) May 1983, (Supplement 2) December 1983, (Supplement 3) September 1985, (Supplement 4) July 1986, (Supplement 5) July 1996.

65. Memorandum for H. Denton from R. Minogue, "Research Information Letter No. 117, 'Probability of Large LOCA Induced by Earthquakes,'" April 10, 1981. [8104220512]

66. Regulatory Guide 1.6, "Independence Between Redundant Standby (Onsite) Power Sources and Between Their Distribution Systems (Safety Guide 6)," U.S. Atomic Energy Commission, March 1971. [7907100064]

67. NRC Letter to All Power Reactor Licensees from B. Grimes, "OT Position for Review and Acceptance of Spent Fuel Storage and Handling Applications," April 14, 1978. [7910310568]

68. Memorandum for R. Fraley from K. Kniel, "Draft Task Action Plan for TASK A-45, Shutdown Decay Heat Removal Requirements," May 22, 1981. [8106010652]

69. NUREG-0880, "Safety Goals for Nuclear Power Plants: A Discussion Paper," U.S. Nuclear Regulatory Commission, February 1982, (Rev. 1) May 1983.

70. NUREG-0348, "Demographic Statistics Pertaining to Nuclear Power Reactor Sites," U.S. Nuclear Regulatory Commission, November 1979.

71. Memorandum for S. Hanauer from D. Eisenhut, "Proposed Recommendations for Improving the Reliability of Open Cycle Service Water Systems," March 19, 1982. [8204190039]

72. AEOD/C202, "Report on Service Water System Flow Blockages by Bivalve Mollusks at Arkansas Nuclear One and Brunswick," Office for Analysis and Evaluation of Operational Data, U.S. Nuclear Regulatory Commission, February 1982. [8202260124]

73. TID-14844, "Calculation of Distance Factors for Power and Test Reactor Sites," U.S. Atomic Energy Commission, March 23, 1962. [8202010067]

74. AEOD/C001, "Report on the Browns Ferry 3 Partial Failure to Scram Event on June 28, 1980," Office for Analysis and Evaluation of Operational Data, U.S. Nuclear Regulatory Commission, July 30, 1980. [8008140575]

75. Memorandum for H. Denton from C. Michelson, "Engineering Evaluation of the Salt Water System (SSWS) Flow Blockage at the Pilgrim Nuclear Power Station by Blue Mussels (Mytilus Edilus)," May 6, 1982. [8205130114]

76. NUREG/CR-2497, "Precursors to Potential Severe Core Damage Accidents: 1969-1979, A Status Report," U.S. Nuclear Regulatory Commission, June 1982.

77. IEEE Std 352, "IEEE Guide for General Principles of Reliability Analysis of Nuclear Power Generating Station Protection Systems," The Institute of Electrical and Electronics Engineers, Inc., 1976.

78. NUREG/CR-1496, "Nuclear Power Plant Operating Experience - 1979," U.S. Nuclear Regulatory Commission, May 1981.

79. NUREG-0109, "Occupational Radiation Exposure at Light Water Cooled Power Reactors 1969-1975," U.S. Nuclear Regulatory Commission, August 1976.

80. DOE/ET/34204-43, "Dilute Chemical Decontamination Program - Final Report," U.S. Department of Energy, August 1981.

81. IEEE Std 317, "Electrical Penetration Assemblies in Containment Structures for Nuclear Power Generating Stations," The Institute of Electrical and Electronics Engineers, Inc., 1976.

82. Regulatory Guide 1.63, "Electrical Penetration Assemblies in Containment Structures for Light-Water-Cooled Nuclear Power Plants," U.S. Nuclear Regulatory Commission, October 1973, (Rev. 1) May 1977, (Rev. 2) July 1978 [7907100240], (Rev. 3) February 1987.

83. Memorandum for K. Kniel from M. Srinivasan, "Generic Issues Tracking System (GITS) B-70; Power Grid Frequency Degradation and Effect on Primary Coolant Pumps," July 31, 1981. [8109140246]

84. Memorandum for C. Berlinger from E. Butcher, "Diagnostic Evaluation at Quad Cities Nuclear Power Station (TAC Nos. M88667/M88668)," June 8, 1994. [9406130249]

85. Regulatory Guide 1.86, "Termination of Operating Licenses for Nuclear Reactors," U.S. Nuclear Regulatory Commission, June 1974. [8404100042, 9009140263]

86. Memorandum for T. Murley from M. Ernst, "Prioritization of New Requirements for PWR Feedwater Line Cracks," June 30, 1981. [8108030041]

87. Memorandum for R. Tedesco from T. Speis, "Supplement 2 to the Safety Evaluation Report for Grand Gulf Nuclear Station, Units 1 and 2," March 25, 1982. [8204080127]

88. Memorandum for All NRR Employees from H. Denton, "Regionalization of Selected NRR Functions," June 15, 1982. [9507280052]

89. NUREG/CR-1750, "Analysis, Conclusions, and Recommendations Concerning Operator Licensing," U.S. Nuclear Regulatory Commission, January 1981.

90. IEEE Std 323, "Qualifying Class 1E Equipment for Nuclear Power Generating Stations," The Institute of Electrical and Electronics Engineers, Inc., 1974.

91. Regulatory Guide 1.89, "Environmental Qualification of Certain Electric Equipment Important to Safety for Nuclear Power Plants," U.S. Nuclear Regulatory Commission, November 1974 [7907100326], (Rev. 1) June 1984 [8407110475].

92. SECY-81-504, "Equipment Qualification Program Plan," August 20, 1981. [8109220949]

93. NUREG-0611, "Generic Evaluation of Feedwater Transients and Small-Break Loss-of-Coolant Accidents in Westinghouse Designed Operating Plants," U.S. Nuclear Regulatory Commission, January 1980.

94. NUREG-0626, "Generic Evaluation of Feedwater Transients and Small Break Loss-of-Coolant Accidents in GE-Designed Operating Plants and Near-Term Operating License Applications," U.S. Nuclear Regulatory Commission, January 1980.

95. NUREG-0635, "Generic Evaluation of Feedwater Transients and Small Break Loss-of-Coolant Accidents in Combustion Engineering-Designed Operating Plants," U.S. Nuclear Regulatory Commission, February 1980.

96. NUREG-0565, "Generic Evaluation of Small Break Loss-of-Coolant Accident Behavior in Babcock & Wilcox Designed 177-FA Operating Plant," U.S. Nuclear Regulatory Commission, January 1980.

97. NUREG-0623, "Generic Assessment of Delayed Reactor Coolant Pump Trip During Small Break Loss-of-Coolant Accidents in Pressurized Water Reactors," U.S. Nuclear Regulatory Commission, November 1979.

98. NUREG-0737, "Clarification of TMI Action Plan Requirements," U.S. Nuclear Regulatory Commission, November 1980, (Supplement 1) January 1983.

99. ANSI/ANS 56.8, "Containment System Leakage Testing Requirements," American National Standards Institute, 1981.

100. Letter to General Electric Company from R. Tedesco (NRC), "Acceptance for Reference Topical Report NEDO-24712: Core Spray Design Methodology Confirmation Tests," January 30, 1981. [8103270130]

101. SECY-82-475, "Staff Resolution of the Reactor Coolant Pump Trip Issue," November 30, 1982. [8306030370]

102. NUREG/CR-0848, "Summary and Bibliography of Operating Experience with Valves in Light-Water-Reactor Nuclear Power Plants for the Period 1965-1978," U.S. Nuclear Regulatory Commission, August 1979.

103. Memorandum for M. Ernst from B. Fourest, "Review of ECCS Actuations on U.S. PWRs," June 11, 1981. [8107160006]

104. Memorandum for C. Michelson from H. Denton, "NRR Responses to AEOD Recommendations on the Arkansas Nuclear One Loss of Offsite Power Event of April 7, 1980," February 13, 1981. [8102270127]

105. Nuclear Power Experience, Volume BWR-2, Book-2, Section IX.A, Nuclear Power Experience, Inc., May 1982.

106. Memorandum for H. Denton from C. Michelson, "Lessons Learned from the Crystal River Transient of February 26, 1980 - Correcting Atmospheric Dump Valve Opening Upon Loss of Integrated Control System Power," May 23, 1980. [8009150079]

107. Memorandum for H. Denton from C. Michelson, "Potential for Unacceptable Interaction Between the Control Rod Drive System and Non-Essential Control Air System at the Browns Ferry Nuclear Plant," August 18, 1980. [8210120129]

108. Memorandum for R. Mattson from S. Hanauer, "Inadvertent Boron Dilution," March 10, 1982. [8205130278]

109. Memorandum for T. Murley from R. Mattson, "Inadvertent Boron Dilution," September 15, 1981. [8110080185]

110. NUREG/CR-2798, "Evaluation of Events Involving Unplanned Boron Dilutions in Nuclear Power Plants," U.S. Nuclear Regulatory Commission, July 1982.

111. Letter to R. Curtis (NRC) from N. DeMuth (LANL), "Analysis of Unmitigated Boron Dilution Events," November 18, 1981. [9507280099]

112. Transactions of the American Nuclear Society and the European Nuclear Society, 1984 International Conference on Nuclear Power - A Global Reality, November 11-16, 1984, Volume 47, pp. 254-256, "Analysis of Unmitigated Boron Dilution Events in Pressurized Water Reactors During Shutdown," B. Nassersharif, J. Wing (LANL).

113. EPRI NP-1194, "Operation and Design Evaluation of Main Coolant Pumps for PWR and BWR Service," Electric Power Research Institute, September 1979.

114. EPRI NP-2092, "Nuclear Unit Operating Experience, 1978 and 1979 Update," Electric Power Research Institute, October 1981.

115. NUREG/CR-3069, "Interaction of Electromagnetic Pulse with Commercial Nuclear Power Plant Systems," U.S. Nuclear Regulatory Commission, February 1983.

116. Letter to D. Switzer (Northeast Nuclear Energy Company) from G. Lear (NRC), "Millstone Nuclear Power Station Units Nos. 1 and 2," June 2, 1977. [9507280126]

117. NRC Letter to All Power Reactor Licensees (Except Humboldt Bay), "Adequacy of Station Electric Distribution Systems Voltages," August 8, 1979. [8005120354]

118. Memorandum for V. Stello from H. Denton, "Guidelines for Evaluating Qualification of Class IE Electrical Equipment in Operating Reactors," November 13, 1979. [7912190733]

119. Memorandum for K. Kniel from W. Gammill, "Need for Generic Issue B-67, Control and Monitoring of Radioactive Materials Released in Effluents and Performance of Radwaste Systems," November 20, 1981. [8201130493]

120. NUREG-0442, "Technical Report on Operating Experience with BWR Offgas Systems," U.S. Nuclear Regulatory Commission, April 1978.

121. IE Bulletin No. 78-03, "Potential Explosive Gas Mixture Accumulations Associated with BWR Offgas System Operations," U.S. Nuclear Regulatory Commission, February 8, 1978. [7909050232]

122. NRC Working Paper on Appendix J to 10 CFR Part 50, "Leak Tests for Primary and Secondary Containments of Light-Water-Cooled Nuclear Power Plants," May 17, 1982. [8401040228]

123. NRC Working Paper on Draft Regulatory Guide (MS021-5), "Containment System Leakage Testing," May 1982. [8405240527]

124. NUREG-0193, "FRANTIC - A Computer Code for Time-Dependent Unavailability Analysis," U.S. Nuclear Regulatory Commission, October 1977.

125. NRC Letter to the Northern States Power Company, "Order for Modification of License Concerning BWR Scram Discharge Systems," January 9, 1981. [8103250282]

126. Memorandum for R. Vollmer from T. Murley, "PWR Feedwater Line Cracks - New Regulatory Requirements," March 10, 1981. [8103250569]

127. Memorandum for H. Kouts from B. Rusche, "Quantification of Inherent Safety Margins in Seismic Design (SAFER-76-5)," June 7, 1976. [8003100435]

128. Memorandum for S. Levine from E. Case, "Quantification of Inherent Safety Margins in Seismic Design," June 16, 1977. [8103270937]

129. Memorandum for H. Denton from S. Levine, "RES Response to NRR User Request on Quantification of Inherent Safety Margins to Seismic Design," November 1, 1978. [8003100425]

130. Memorandum for S. Levine from H. Denton, "Seismic Safety Margins Research Program," February 23, 1979. [8003280774]

131. NUREG/CR-2015, "SSMRP Phase I Final Report," U.S. Nuclear Regulatory Commission, (Vol. 1) April 1981, (Vol. 2) July 1981, (Vol. 3) January 1983, (Vol. 4) June 1982, (Vol. 5) August 1981, (Vol. 6) October 1981, (Vol. 8) September 1984, (Vol. 9) September 1981, (Vol. 10) July 1981.

132. Memorandum for R. Minogue from H. Denton, "NRR Research Needs in Seismic Analyses Methodology," April 8, 1982. [8706040051]

133. NUREG-0784, "Long Range Research Plan FY 1984-1988," U.S. Nuclear Regulatory Commission, August 1982.

134. SECY-82-53, "Possible Relocation of Design Controlling Earthquakes in the Eastern U.S.," U.S. Nuclear Regulatory Commission, February 5, 1982. [8203050077]

135. NUREG-0484, "Methodology for Combining Dynamic Responses," U.S. Nuclear Regulatory Commission, September 1978, (Rev. 1) May 1980.

136. Memorandum for W. Minners from R. Bosnak, "Comments on Generic Issue B-6," August 26, 1982. [8209280601]

137. Memorandum for W. Minners from F. Schauer, "Generic Issue B-6," September 2, 1982. [8401170090]

138. NUREG/CR-1924, "FRANTIC II - A Computer Code for Time Dependent Unavailability Analysis," U.S. Nuclear Regulatory Commission, April 1981.

139. Letter to W. Dickhoner (The Cincinatti Gas & Electric Company) from A. Giambusso (NRC), December 18, 1972. [8709240215]

140. Memorandum for R. Frahm from R. Emrit, "Summary Report on a Risk Based Categorization of NRC Technical and Generic Issues," June 30, 1989. [9507280169]

141. Regulatory Guide 1.150, "Ultrasonic Testing of Reactor Vessel Welds During Preservice and Inservice Examinations," U.S. Nuclear Regulatory Commission, June 1981 [8108040038], (Rev. 1) February 1983 [8808230046].

142. NRC Letter to Alabama Power Company, "Containment Purging During Normal Plant Operation," November 28, 1978. [7812140364]

143. NRC Letter to Nebraska Public Power District, "Containment Purging and Venting during Normal Operation," October 22, 1979. [7911190034]

144. Regulatory Guide 1.75, "Physical Independence of Electric Systems," U.S. Nuclear Regulatory Commission, February 1974, (Rev. 1) January 1975 [8605300425], (Rev. 2) September 1978 [7810050139].

145. Memorandum for D. Thatcher from R. Emrit, "Interim Criteria for Evaluating Steel Containment Buckling," June 21, 1982. [9507280196]

146. Regulatory Guide 1.133, "Loose-Part Detection Program for the Primary System of Light-Water-Cooled Reactors," U.S. Nuclear Regulatory Commission, September 1977, (Rev. 1) May 1981 [8106120320].

147. Regulatory Guide 1.20, "Comprehensive Vibration Assessment Program for Reactor Internals During Preoperational and Initial Startup Testing," U.S. Nuclear Regulatory Commission, December 1971, (Rev. 1) June 1975, (Rev. 2) May 1976 [7907100101].

148. "Memorandum of Agreement between the Institute of Nuclear Power Operations and the U.S. Nuclear Regulatory Commission," (Rev. 1) April 1, 1982. [8207010053]

149. Memorandum for J. Funches from R. Mattson, "Comments on Prioritization of Licensing Improvement Issues," February 2, 1983. [8401170099]

150. Regulatory Guide 1.47, "Bypassed and Inoperable Status Indication for Nuclear Power Plant Safety Systems," U.S. Atomic Energy Commission, May 1973. [7907100191]

151. SECY-82-111, "Requirements for Emergency Response Capability," March 11, 1982. [8203180409]

152. NUREG/CR-2417, "Identification and Analysis of Human Errors Underlying Pump and Valve Related Events Reported by Nuclear Power Plant Licensees," U.S. Nuclear Regulatory Commission, February 1982.

153. NUREG/CR-3621, "Safety System Status Monitoring," U.S. Nuclear Regulatory Commission, March 1984.

154. NRC Letter to Construction Permit Holders of B&W Designed Facilities, October 25, 1979.

155. NUREG-0667, "Transient Response of Babcock & Wilcox Designed Reactors," U.S. Nuclear Regulatory Commission, May 1980.

156. Memorandum for H. Denton from D. Eisenhut, "NUREG-0667, Transient Response of Babcock & Wilcox Designed Reactors, Implementation Plan," June 3, 1981. [8510070181]

157. Memorandum for D. Eisenhut from G. Lainas, "Status Report on Implementation of NUREG-0667 Category A Recommendations," December 15, 1981. [8201190550]

158. Memorandum for H. Denton from R. Mattson, "Review of Final Report of the B&W Reactor Transient Response Task Force (NUREG-0667)," August 8, 1980. [8010270109, 8010240413]

159. Memorandum for S. Hanauer from R. Mattson, "Design Sensitivity of B&W Reactors, Item II.E.5.1 of NUREG-0660," February 26, 1982. [8203170235]

160. Memorandum for R. Mattson from S. Hanauer, "Design Sensitivity of B&W Reactors," June 21, 1982. [8207150195]

161. NUREG/CR-1250, "Three Mile Island: A Report to the Commission and to the Public," U.S. Nuclear Regulatory Commission, January 1980.

162. NRC Letter to All Light Water Reactors, "Containment Purging and Venting During Normal Operation - Guidelines for Valve Operability," September 27, 1979. [9705190209]

163. NUREG-0305, "Technical Report on DC Power Supplies in Nuclear Power Plants," U.S. Nuclear Regulatory Commission, July 1977.

164. NUREG-0666, "A Probabilistic Safety Analysis of DC Power Supply Requirements for Nuclear Power Plants," U.S. Nuclear Regulatory Commission, April 1981.

165. Memorandum for M. Srinivasan from O. Parr and B. Sheron, "Generic Issue (GI) A-30, Adequacy of Safety Related DC Power Supplies, Development of Licensing Guidelines," March 12, 1982. [8401170018]

166. Memorandum for E. Case from R. Mattson, "Task No. D-3 Control Rod Drop Accident (BWRs)," March 6, 1978. [8001140319]

167. Federal Register Notice 44 FR 68307, "Decommissioning and Site Reclamation of Uranium and Thorium Mills," November 28, 1979.

168. NRC Letter to Arkansas Power & Light Company, "Order for Modification of License Concerning Primary Coolant System Pressure Isolation Valves," (Docket No. 50-313), April 20, 1981. [8104270071]

169. Memorandum for A. Ungaro (NRC) from F. Clark (ORNL), "Report on Standards and Requirements for Electrical Penetration Assemblies for Nuclear Reactor Containment Structures," December 13, 1978. [9507280225]

170. NUREG/CR-1345, "Nuclear Power Plant Design Concepts for Sabotage Protection," U.S. Nuclear Regulatory Commission, 1981.

171. Bulletin of the Atomic Scientists, Vol. 32, No. 8, pp. 29-36, "Nuclear Sabotage," M. Flood, October 1976.

172. Federal Register Notice 43 FR 10370, "[10 CFR Parts 30, 40, 50, and 70] Decommissioning Criteria for Nuclear Facilities, Advance Notice of Proposed Rulemaking," March 13, 1978.

173. NUREG-0586, "Final Generic Environmental Impact Statement on Decommissioning of Nuclear Facilities," U.S. Nuclear Regulatory Commission, August 1988.

174. NUREG-0585, "TMI Lessons Learned Task Force Final Report," U.S. Nuclear Regulatory Commission, October 1979.

175. ZAR-791030-01, "Report of the President's Commission on the Accident at Three Mile Island," J. G. Kemeny, et al., November 30, 1979.

176. Memorandum for J. Ahearne from M. Carbon, "Comments on the Pause in Licensing," December 11, 1979. [8001080218]

177. Memorandum for N. Moseley from J. Allan, "Operations Team Recommendations - IE/TMI Unit 2 Investigation," October 16, 1979. [8007160815]

178. EPRI NP-801, "ATWS: A Reappraisal, Part III, Frequency of Anticipated Transients," Electric Power Research Institute, July 1978.

179. NUREG-0020, "Licensed Operating Reactors, Status Summary Report," U.S. Nuclear Regulatory Commission, (Vol. 6, No. 2) February 1982.

180. NUREG-0580, "Regulatory Licensing Status Summary Report," U.S. Nuclear Regulatory Commission, (Vol. 11, No. 5) June 1982.

181. SECY-82-155, "Public Law 96-295, Section 307(B), Study of the Feasibility and Value of Licensing of Nuclear Plant Managers and Senior Licensee Officers," April 12, 1982. [8205050080]

182. NUREG/CR-0672, "Technology, Safety, and Costs of Decommissioning a Reference Boiling Water Reactor Power Station," U.S. Nuclear Regulatory Commission, June 1980.

183. NUREG-0153, "Staff Discussion of 12 Additional Technical Issues Raised by Responses to the November 3, 1976 Memorandum from Director, NRR to NRR Staff," December 1976.

184. Memorandum for R. Vollmer from D. Eisenhut, "Transmittal of Report on Threaded Fastener Experience in Nuclear Power Plants," August 25, 1982. [8209210482]

185. Memorandum for H. Denton from C. Michelson, "AEOD Report on the St. Lucie Natural Circulation Cooldown on June 11, 1980," December 24, 1980. [8101120011]

186. NUREG-0510, "Identification of Unresolved Safety Issues Relating to Nuclear Power Plants," U.S. Nuclear Regulatory Commission, January 1979.

187. NUREG/CR-2300, "PRA Procedures Guide," U.S. Nuclear Regulatory Commission, (Vols. 1 and 2) January 1983.

188. NUREG/CR-2644, "An Assessment of Offsite, Real-Time Dose Measurements for Emergency Situations," U.S. Nuclear Regulatory Commission, April 1982.

189. Memorandum for K. Goller from R. Mattson, "Proposed Changes to Regulatory Guide 1.97," July 29, 1982. [8208060339]

190. Memorandum for W. Dircks from S. Chilk, "Staff Requirements - Affirmative Session, 11:50 a.m., Friday July 16, 1982," July 20, 1982. [8208040248, 8209010068]

191. NUREG-0799, "Draft Criteria for Preparation of Emergency Operating Procedures," U.S. Nuclear Regulatory Commission, June 1981.

192. NUREG-0899, "Guidelines for Preparation of Emergency Operating Procedures - Resolution of Comments on NUREG-0799," U.S. Nuclear Regulatory Commission, September 3, 1982.

193. Memorandum for J. Martin, et al., from L. Shao, "Division Review Request: Amendments to 10 CFR Parts 30, 40, 50, 70, and 72 on Decommissioning Criteria for Nuclear Facilities," July 7, 1982. [8209140007]

194. IEEE Std 500, "IEEE Guide to the Collection and Presentation of Electrical, Electronic, and Sensing Component Reliability Data for Nuclear Power Generating Stations," The Institute of Electrical and Electronics Engineers, Inc., 1977.

195. Memorandum for E. Adensam from R. Riggs, "Status on Reactor Coolant Pump Seal Degradation Review," December 9, 1980. [8102280212]

196. Memorandum for H. Denton from S. Hanauer, "Preliminary Ranking of NRR Generic Safety Issues," March 26, 1982. [8204280036]

197. Federal Register Notice 45 FR 37011, "Decommissioning of Nuclear Facilities Regulation (10 CFR Parts 30, 40, 50, and 70)," May 30, 1980.

198. NUREG-0698, "NRC Plans for Cleanup Operations at Three Mile Island Unit 2," U.S. Nuclear Regulatory Commission, July 1980.

199. NUREG-0683, "Final Programmatic Environmental Impact Statement Related to Decontamination and Disposal of Radioactive Wastes Resulting from the March 28, 1979 Accident at Three Mile Island Nuclear Station, Unit 2," U.S. Nuclear Regulatory Commission, March 1981.

200. IEEE Std 603, "IEEE Standard Criteria for Safety Systems for Nuclear Power Generating Stations," The Institute of Electrical and Electronics Engineers, Inc., 1980.

201. IE Bulletin No. 80-24, "Prevention of Damage Due to Water Leakage Inside Containment (October 17, 1980 Indian Point 2 Event)," U.S. Nuclear Regulatory Commission, November 21, 1980. [8008220270]

202. Memorandum for G. Cunningham et al., from K. Goller, "Proposed Amendment to Part 50 on Radiation Programs, Including ALARA," September 10, 1982. [8209300046]

203. SECY-82-157A, 'Status Report on the NRR Investigation of the Effects of Electromagnetic Pulse (EMP) on Nuclear Power Plants," July 16, 1982. [8205050108]

204. NUREG-0855, "Health Physics Appraisal Program," U.S. Nuclear Regulatory Commission, March 1982.

205. NUREG-0761, "Radiation Protection Plans for Nuclear Power Reactor Licensees," U.S. Nuclear Regulatory Commission, March 1981.

206. Memorandum for L. Rubenstein from M. Ernst, "Proposed Position Regarding Containment Purge/Vent Systems," April 17, 1981. [8105260251]

207. IE Bulletin No. 81-03, "Flow Blockage of Cooling Water to Safety System Components by CORBICULA SP. (Asiatic Clam) and MYTILUS SP. (Mussel)," U.S. Nuclear Regulatory Commission, April 10, 1981. [8011040289]

208. Regulatory Guide 1.52, "Design, Testing and Maintenance Criteria for Post Accident Engineered-Safety-Feature Atmosphere Cleanup System Air Filtration and Adsorption Units of Light-Water-Cooled Nuclear Power Plants," U.S. Nuclear Regulatory Commission, June 1973, (Rev. 1) July 1976, (Rev. 2) March 1978 [7907100211].

209. Regulatory Guide 1.140, "Design, Testing, and Maintenance Criteria for Normal Ventilation Exhaust System Air Filtration and Adsorption Units of Light-Water-Cooled Nuclear Power Plants," U.S. Nuclear Regulatory Commission, March 1978, (Rev. 1) October 1979 [7911090195].

210. NUREG-0885, "U.S. Nuclear Regulatory Commission Policy and Planning Guidance," U.S. Nuclear Regulatory Commission, (Issue 1) January 1982, (Issue 2) January 1983, (Issue 3) January 1984, (Issue 4) February 1985, (Issue 5) February 1986, (Issue 6) September 1987.

211. Federal Register Notice 46 FR 764, "NRC Policy Statement on Cleanup of the Three Mile Island Plant," May 1, 1981.

212. NUREG-0772, "Technical Bases for Estimating Fission Product Behavior During LWR Accidents," U.S. Nuclear Regulatory Commission, June 1981.

213. Regulatory Guide 1.3, "Assumptions Used for Evaluating the Potential Radiological Consequences of a Loss-of-Coolant Accident for Boiling Water Reactors," U.S. Nuclear Regulatory Commission, November 1970, (Rev. 1) June 1973, (Rev. 2) June 1974 [7907100054].

214. Regulatory Guide 1.4, "Assumptions Used for Evaluating the Potential Radiological Consequences of a Loss-of-Coolant Accident for Pressurized Water Reactors," U.S. Nuclear Regulatory Commission, November 1970, (Rev. 1) June 1973, (Rev. 2) June 1974 [7907100058].

215. Memorandum for E. Sullivan from R. Bosnak, "Generic Issues," September 17, 1982. [8312290147]

216. Regulatory Guide 1.108, "Periodic Testing of Diesel Generator Units Used as Onsite Electric Power Systems at Nuclear Power Plants," U.S. Nuclear Regulatory Commission, August 1976, (Rev. 1) August 1977. [7907100397]

217. NUREG/CR-0660, "Enhancement of On-site Emergency Diesel Generator Reliability," U.S. Nuclear Regulatory Commission, February 1979.

218. Memorandum for D. Eisenhut, et al., from S. Hanauer, "Diesel Generator Reliability at Operating Plants," May 6, 1982. [8205280490]

219. Memorandum for S. Hanauer from R. Mattson, "Request for Prioritization of BWR Main Steam Line Isolation Valve Leakage as a Generic Issue," July 30, 1982. [8209130423]

220. IE Bulletin No. 82-23, "Main Steam Isolation Valve (MSIV) Leakage," U.S. Nuclear Regulatory Commission, July 16, 1982. [8204210393]

221. Regulatory Guide 1.48, "Design Limits and Loading Combinations for Seismic Category 1 Fluid System Components," U.S. Atomic Energy Commission, May 1973. [7907100195]

222. NUREG-0479, "Report on BWR Control Rod Drive Mechanical Failures," U.S. Nuclear Regulatory Commission, January 1979.

223. NUREG-0462, "Technical Report on Operating Experience with BWR Pressure Relief Valves," U.S. Nuclear Regulatory Commission, July 1978.

224. NUREG-0654, "Criteria for Preparation and Evaluation of Radiological Emergency Response Plans and Preparedness in Support of Nuclear Power Plants," U.S. Nuclear Regulatory Commission, February 1980, (Rev. 1) November 1980.

225. Regulatory Guide 1.33, "Quality Assurance Program Requirements (Operation)," U.S. Nuclear Regulatory Commission, November 1972, (Rev. 1) February 1977, (Rev. 2) February 1978 [7907100144].

226. Regulatory Guide 1.8, "Qualification and Training of Personnel for Nuclear Power Plants," U.S. Nuclear Regulatory Commission, March 1971, (Rev. 1) September 1975 [8801130111], (Rev. 1-R) May 1977 [7907100073], (Rev. 2) April 1987 [8907180147].

227. NUREG/CR-0130, "Technology, Safety, and Costs of Decommissioning a Reference Pressurized Water Reactor Power Station," U.S. Nuclear Regulatory Commission, June 1978.

228. SECY-81-450, "Development of a Selective Absorption System Emergency Unit," July 27, 1981. [8108140094]

229. Memorandum for T. Speis from R. Houston, "Containment Venting and Purging - Completion of TMI Action Plan Item II.E.4.4(4)," March 3, 1982. [8401170023, 8203240149]

230. Memorandum for R. Mattson from T. Speis, "Containment Purge and Venting -Completion of TMI Action Plan Item II.E.4.4(5)," April 9, 1982. [8204260021]

231. Memorandum for W. Dircks from R. Mattson, "Status Report on Containment Purge Evaluations," May 13, 1982. [8401170021]

232. SECY-81-168B, "Response to Commission Request for Information on Financial Considerations in Licensing Proceedings," July 13, 1981. [8107310227]

233. Regulatory Guide 1.26, "Quality Group Classifications and Standards for Water-, Steam-, and Radioactive-Waste-Containing Components of Nuclear Power Plants," U.S. Nuclear Regulatory Commission, March 1972, (Rev. 1) September 1974, (Rev. 2) June 1975, (Rev. 3) February 1976.

234. Federal Register Notice 47 FR 9987, "10 CFR Part 2, General Statement of Policy and Procedure for Enforcement Actions," March 9, 1982.

235. Memorandum for H. Denton from R. DeYoung, "TMI Action Plan Items Still Pending," June 10, 1982. [8401170101]

236. Memorandum for W. Dircks from R. DeYoung, "TMI Action Plan - Completed Items," June 30, 1982. [8208110023]

237. SECY-80-366, "NRC Legislative Program for 97th Congress," August 6, 1980. [8101050634]

238. Memorandum for Chairman Hendrie, et al., from W. Dircks, "Memorandum of Agreement with INPO and NSAC on a Cooperative Relationship for the Collection and Feedback of Operational Data," June 16, 1981. [8106260511, 8106260514]

239. Memorandum for W. Dircks from V. Stello, "TMI Action Plan - Status Report," December 19, 1980. [8205260193]

240. SECY-81-153, "Nuclear Data Link," March 11, 1981. [8103240155]

241. NUREG/CR-1440, "Light Water Reactor Status Monitoring During Accident Conditions," U.S. Nuclear Regulatory Commission, May 1980.

242. NUREG/CR-2100, "Boiling Water Reactor Status Monitoring During Accident Conditions," U.S. Nuclear Regulatory Commission, May 1981.

243. NUREG/CR-2278, "Light Water Reactor Engineered Safety Features Status Monitoring," U.S. Nuclear Regulatory Commisson, October 1981.

244. NUREG/CR-2147, "Nuclear Control Room Annunciators," U.S. Nuclear Regulatory Commission, October 1981.

245. Memorandum for H. Denton, et al., from R. Minogue, "Research Information Letter #RIL-124, 'Control Room Alarms and Annunciators,'" October 20, 1981. [8111130045]

246. RIL-98, "Light Water Reactor Status Monitoring During Accident Conditions," U.S. Nuclear Regulatory Commission, August 18, 1980. [8104230867]

247. NUREG/CR-5669, "Evaluation of Exposure Limits to Toxic Gases for Nuclear Reactor Control Room Operators," U.S. Nuclear Regulatory Commission, July 1991.

248. Memorandum for W. Dircks from R. DeYoung, "TMI Action Plan - Completed Items," December 28, 1981. [8205260197]

249. NUREG/CR-6210, "Computer Codes for Evaluation of Control Room Habitability (HABIT)," U.S. Nuclear Regulatory Commission, June 1996.

250. SECY-81-440, "Nuclear Power Plant Staff Working Hours," July 22, 1981. [8107290183]

251. SECY-79-330E, "Qualifications of Reactor Operators," July 30, 1979. [7910020256, 7910020279]

252. NRR-80-117, "Study of Requirements for Operator Licensing," February 4, 1982. [8203180234]

253. ANSI/ANS 3.1, "Selection, Qualification, and Training of Personnel for Nuclear Power Plants," American National Standards Institute, 1981.

254. Letter to N. Palladino (NRC) from M. Udall (Chairman, Committee on Interior and Insular Affairs, U.S. House of Representatives), June 4, 1982. [8207120246]

255. Letter to M. Udall (Chairman, Committee on Interior and Insular Affairs, U.S. House of Representatives) from N. Palladino (NRC), June 30, 1982. [8206130067]

256. Memorandum for W. Dircks from R. DeYoung, "TMI Action Plan - Completed Items," June 2, 1982. [8401170114]

257. NUREG-0728, "Report to Congress - NRC Incident Response Plan," U.S. Nuclear Regulatory Commission, September 1980.

258. NUREG-0845, "Agency Procedure for the NRC Incident Response Plan," U.S. Nuclear Regulatory Commission, March 1982.

259. Memorandum for J. Sniezek from J. Taylor, "TMI Action Plan Item II.J.1.2, Modification of Vendor Inspection Program," October 13, 1982. [8301050485]

260. SECY-81-494, "Integrated Operational Experience Reporting System," August 18, 1981. [8109110483]

261. Federal Register Notice 46 FR 53594, "NRC Regulatory Agenda," October 29, 1981.

262. BNL/NUREG-28955, "PWR Training Simulator and Evaluation of the Thermal-Hydraulic Models for Its Main Steam Supply System," Brookhaven National Laboratory, 1981.

263. BNL/NUREG-29815, "BWR Training Simulator and Evaluation of the Thermal-Hydraulic Models for Its Main Steam Supply System," Brookhaven National Laboratory, 1981.

264. BNL/NUREG-30602, "A PWR Training Simulator Comparison with RETRAN for a Reactor Trip from Full Power," Brookhaven National Laboratory, 1981.

265. Memorandum for the Commissioners from W. Dircks, "Enforcement Policy," March 18, 1980. [8005160508]

266. SECY-80-139A, "NRC Enforcement Program," August 27, 1980. [8009180277]

267. Memorandum for R. Purple from R. Minogue, "TMI Action Plan," October 24, 1980. [8011120511]

268. Memorandum for W. Dircks from V. Stello, "Assignment of Resident Inspectors to Nuclear Steam System Suppliers and Architect-Engineers," September 14, 1981. [8111030559]

269. IE Circular No. 80-15, "Loss of Reactor Coolant Pump Cooling and Natural Circulation Cooldown," U.S. Nuclear Regulatory Commission, June 20, 1980. [8005050073]

270. Memorandum for C. Michelson from H. Denton, "Report on St. Lucie Natural Circulation Cooldown," April 6, 1981. [8104150248]

271. Memorandum for J. Taylor from E. Beckjord, "Closeout of TMI Action Plan Task I.D.5(5), Research on Disturbance Analysis Systems," April 17, 1995. [9705190216]

272. Memorandum for J. Gagliardo from D. Eisenhut, "Potential Failure of Turbine Driven Auxiliary Feedwater Pump Steam Supply Line - Fort Calhoun," October 8, 1982. [8210290122]

273. Memorandum for H. Denton from C. Michelson, "Technical Review Report, Postulated Loss of Auxiliary Feedwater System Resulting from Turbine Driven Auxiliary Feedwater Pump Steam Supply Line Rupture," February 16, 1983. [8303040296]

274. Letter to G. Knighton (NRC) from K. Baskin (Southern California Edison Company), "Docket Nos. 50-361 and 50-362, San Onofre Nuclear Generating Station Units 2 and 3," October 29, 1982. [8211020483]

275. NUREG/CR-1614, "Approaches to Acceptable Risk: A Critical Guide," U.S. Nuclear Regulatory Commission, September 1980.

276. NUREG/CR-1539, "A Methodology and a Preliminary Data Base for Examining the Health Risks of Electricity Generation from Uranium and Coal Fuels," U.S. Nuclear Regulatory Commission, August 1980.

277. NUREG/CR-1930, "Index of Risk Exposure and Risk Acceptance Criteria," U.S. Nuclear Regulatory Commission, February 1981.

278. NUREG/CR-1916, "A Risk Comparison," U.S. Nuclear Regulatory Commission, February 1981.

279. NUREG/CR-2040, "A Study of the Implications of Applying Quantitative Risk Criteria in the Licensing of Nuclear Power Plants in the U.S.," U.S. Nuclear Regulatory Commission, March 1981.

280. SECY-80-331, "NRC Training Program," July 14, 1980. [8009100166]

281. Memorandum for H. Denton, et al., from C. Michelson, "Case Study Report - Failure of Class 1E Safety-Related Switchgear Circuit Breakers to Close on Demand," August 4, 1982. [8208240007]

282. Memorandum for C. Michelson from H. Denton, "AEOD Preliminary Report on Failures of Class 1E Safety-Related Switchgear Circuit Breakers to Close on Demand," September 23, 1982. [8210290150]

283. Federal Register Notice 47 FR 36099, "Executive Order 12379 of August 17, 1982, Termination of Boards, Committees, and Commissions," August 19, 1982.

284. Letter to N. Palladino (NRC) from G. Keyworth (OSTP), July 21, 1982. [9705190213]

285. Letter to G. Keyworth (OSTP) from N. Palladino (NRC), July 23, 1982. [9705190203]

286. Letter to T. Pestorius (OSTP) from R. Minogue (NRC), August 27, 1982. [9104170201]

287. SECY-81-600A, "Revised General Statement of Policy and Procedure for Enforcement Actions," December 14, 1981. [8201190600]

288. NEDO-10174, "Consequences of a Postulated Flow Blockage Incident in a Boiling Water Reactor," General Electric Company, October 1977, (Rev. 1) May 1980.

289. NUREG/CR-2075, "Standards for Psychological Assessment of Nuclear Facility Personnel," U.S. Nuclear Regulatory Commission, July 1981.

290. NUREG/CR-2076, "Behavioral Reliability Program for the Nuclear Industry," U.S. Nuclear Regulatory Commission, July 1981.

291. Memorandum for E. Jordan, et al., from R. Bernero, "Proposed Rule Review Request - 10 CFR Part 21, 'Reporting of Defects and Noncompliance,'" September 28, 1982. [8210150634]

292. Memorandum for R. Minogue from R. DeYoung, "Proposed Rule Amending 10 CFR Parts 50.55(e) and 21: RES Task Numbers RA 128-1 and RA 808-1," July 13, 1982.

293. Federal Register Notice 47 FR 18508, "NRC Regulatory Agenda," April 29, 1982.

294. Federal Register Notice 47 FR 48960, "NRC Regulatory Agenda," October 28, 1982.

295. BNL-NUREG-31940, "Postulated SRV Line Break in the Wetwell Airspace of Mark I and Mark II Containments - A Risk Assessment," Brookhaven National Laboratory, October 1982. [8212070471]

296. Letter to T. Kress from J. Taylor, "Resolution of Generic Safety Issue 83, 'Control Room Habitability,'" September 13,1995. [9605130222, 9605150092]

297. Memorandum for W. Dircks from R. DeYoung, "TMI Action Plan - Completed Item," October 29, 1982. [8401170104]

298. Memorandum for W. Dircks from V. Stello, "TMI Action Plan - Status Report," April 17, 1981. [8205260194]

299. NUREG/CR-1482, "Nuclear Power Plant Simulators: Their Use in Operator Training and Requalification," U.S. Nuclear Regulatory Commission, August 1980.

300. NUREG/CR-2353, "Specification and Verification of Nuclear Power Plant Training Simulator Response Characteristics," U.S. Nuclear Regulatory Commission, (Vol. 1) January 1982, (Vol. 2) May 1982.

301. Memorandum for R. Emrit from P. Goldman, "Draft Report on the Prioritization of Non-NRR TMI Action Plan Items," December 29, 1982. [8312290171]

302. Memorandum for H. Denton from C. Michelson, "Operational Restrictions for Class IE 120 VAC Vital Instrument Buses," July 15, 1980. [8210120114]

303. Memorandum for C. Michelson from H. Denton, "LCO for Class IE Vital Instrument Buses in Operating Reactors," September 29, 1980. [8010220035]

304. UCID-19469, "120 VAC Vital Instrument Buses and Inverter Technical Specifications," Lawrence Livermore National Laboratory, October 28, 1982. [8405180177]

305. Memorandum to Distribution from J. Davis, "NMSS Procedure for Review of Routine Inspection Operational Data and Licensee Event Reports," March 9, 1982. [8312290164]

306. IEEE Catalog No. TH0073-7, "Record of the Working Conference on Advanced Electrotechnology Applications to Nuclear Power Plants, January 15-17, 1980, Washington, D.C.," The Institute of Electrical and Electronics Engineers, Inc.

307. EPRI NP-2230, "ATWS: A Reappraisal, Part 3," Electric Power Research Institute, 1982.

308. SECY-82-352, "Assurance of Quality," August 20, 1982. [8209160068]

309. SECY-82-1, "Severe Accident Rulemaking and Related Matters," January 4, 1982. [8201190416]

310. Memorandum for W. Dircks from S. Chilk, "Staff Requirements - Briefing on Status and Plan for Severe Accident Rulemaking (SECY-82-1)," January 29, 1982. [8202160202]

311. SECY-82-1A, "Proposed Commission Policy Statement on Severe Accidents and Related Views on Nuclear Reactor Regulation," July 16, 1982. [8208040432]

312. NUREG/CR-0165, "A Value-Impact Assessment of Alternate Containment Concepts," U.S. Nuclear Regulatory Commission, June 1978.

313. NUREG/CR-2063, "Effects of the Accident of Three Mile Island on Property Values and Sales," U.S. Nuclear Regulatory Commission, March 1981.

314. NUREG/CR-2749, "Socioeconomic Impacts of Nuclear Generating Stations - Three Mile Island Case Study," U.S. Nuclear Regulatory Commission, (Vol. 12) July 1982.

315. Memorandum of Understanding Between the Federal Emergency Management Agency and the Nuclear Regulatory Commission, "Incident Response," October 22, 1980. [8011170793]

316. Memorandum of Understanding Between the Nuclear Regulatory Commission and the Federal Emergency Management Agency, "Radiological Emergency Planning and Preparedness," November 4, 1980. [8012110538]

317. Memorandum for G. Lainas from F. Miraglia, "CRGR Package for MPA B-71, 120 VAC Vital Instrument Buses and Inverter Technical Specifications," November 23, 1982. [8212160596]

318. Memorandum for H. Denton, et al., from C. Michelson, "An Analysis of the Abnormal Transient Operating Guidelines (ATOG) as Applied to the April 1981 Overfill Event at Arkansas Nuclear One - Unit 1," April 9, 1982. [8204220005]

319. Memorandum for C. Michelson from D. Eisenhut, "Review of Abnormal Transient Operating Guidelines (ATOG) as Applied to the April 8, 1981 Overfill Event at Arkansas Nuclear One - Unit 1," July 30, 1982. [8208180173]

320. Memorandum for C. Michelson from H. Denton, "Review of the Case Study of the Abnormal Transient Operating Guidelines (ATOG) as Applied to the April 1981 Overfill Event at Arkansas Nuclear One - Unit 1," October 7, 1982. [8211030575]

321. Memorandum for Commissioner Ahearne from W. Dircks, "AEOD Report on Arkansas Unit 1 Overfill Event," November 1, 1982. [8211190330]

322. AEOD/C201, "Report on The Safety Concern Associated with Reactor Vessel Level Instrumentation in Boiling Water Reactors," Office for Analysis and Evaluation of Operational Data, U.S. Nuclear Regulatory Commission, January 1982. [8202180432]

323. Memorandum for C. Michelson from H. Denton, "AEOD January 1982 Report on Safety Concern Associated with Reactor Vessel Level Instrumentation in Boiling Water Reactors," March 19, 1982. [8204190068]

324. NUREG-0785, "Safety Concerns Associated with Pipe Breaks in the BWR Scram System," U.S. Nuclear Regulatory Commission, April 1981.

325. NRC Letter to All BWR Licensees, "Safety Concerns Associated with Pipe Breaks in the BWR Scram System (Generic Letter 81-20)," April 10, 1981. [8112170367]

326. NEDO-24342, "GE Evaluation in Response to NRC Request Regarding BWR Scram System Pipe Breaks," General Electric Company, April 1981. [8105070251]

327. Letter to D. Eisenhut (NRC) from G. Sherwood (GE), "NRC Report, 'Safety Concerns Associated with Pipe Breaks in the BWR Scram System,'" April 30, 1981. [8105070249]

328. NUREG-0803, "Generic Safety Evaluation Report Regarding Integrity of BWR Scram System Piping," U.S. Nuclear Regulatory Commission, August 1981.

329. NRC Letter to All GE BWR Licensees (Except Humboldt Bay), "Safety Concerns Associated with Pipe Breaks in the BWR Scram System (Generic Letter 81-34)," August 31, 1981. [8110150121]

330. AEOD/C003, "Report on Loss of Offsite Power Event at Arkansas Nuclear One, Units 1 and 2, on April 7, 1980," Office for Analysis and Evaluation of Operational Data, U.S. Nuclear Regulatory Commission, October 15, 1980. [8011170099]

331. Memorandum for C. Michelson from H. Denton, "NRR Responses to AEOD Recommendations on the Arkansas Loss of Offsite Power Event of April 7, 1980," February 13, 1981. [8102270127]

332. NRC Letter to All BWR Applicants for CPs, Holders of CPs, and Applicants for OLs, "Safety Concerns Associated with Pipe Breaks in the BWR Scram System (Generic Letter 81-35)," August 31, 1981. [8112170388]

333. SECY-82-445, "Proposal to Assign Two Resident Inspectors to Each Reactor Construction Site," November 1, 1982. [8211190003]

334. SECY-82-478, "Resident Inspection Program," December 6, 1982. [8401250359]

335. Memorandum for J. Taylor from D. Morrison, "Resolution of Generic Safety Issue 83, 'Control Room Habitability,'" June 17, 1996. [9607250277]

336. NUREG-0834, "NRC Licensee Assessments," U.S. Nuclear Regulatory Commission, August 1981.

337. NUREG/CR-2672, "SBLOCA Outside Containment at Browns Ferry Unit One - Accident Sequence Analysis," U.S. Nuclear Regulatory Commission, November 1982.

338. NUREG/CR-2744, "Human Reliability Data Bank for Nuclear Power Plant Operations," U.S. Nuclear Regulatory Commission, November 1982.

339. NUREG/CR-1278, "Handbook of Human Reliability Analysis with Emphasis on Nuclear Power Plant Applications," U.S. Nuclear Regulatory Commission, October 1983.

340. Memorandum for H. Denton from J. Fouchard, "Draft Report on the Prioritization of Non-NRR TMI Action Plan Items," January 17, 1983. [8302030055]

341. NUREG/CR-2255, "Expert Estimation of Human Error Probabilities in Nuclear Power Plant Operations: A Review of Probability Assessment and Scaling," U.S. Nuclear Regulatory Commission, May 1982.

342. NUREG/CR-2743, "Procedures for Using Expert Judgment to Estimate Human Error Probabilities in Nuclear Power Plant Operations," U.S. Nuclear Regulatory Commission, February 1983.

343. NUREG/CR-2254, "Workbook for Conducting Human Reliability Analysis," U.S. Nuclear Regulatory Commission, February 1983.

344. NUREG/CR-1205, "Data Summaries of Licensee Event Reports of Pumps at U.S. Commercial Nuclear Power Plants," U.S. Nuclear Regulatory Commission, January 1980, (Rev. 1) January 1982.

345. Memorandum for R. Vollmer from T. Murley, "Prioritization of New Requirements for PWR Feedwater Line Cracks," July 21, 1981. [8108180001]

346. NUREG/CR-1363, "Data Summaries of Licensee Event Reports of Valves at U.S. Commercial Nuclear Power Plants," U.S. Nuclear Regulatory Commission, June 1980, (Rev. 1) October 1982.

347. NUREG/CR-6316, "Guidelines for the Verification and Validation of Expert System Software and Conventional Software," U.S. Nuclear Regulatory Commission, (Vols. 1, 2, 3, 4, 5, 6, 7, and 8) March 1995.

348. NUREG/CR-1362, "Data Summaries of Licensee Event Reports of Diesel Generators at U.S. Commercial Nuclear Power Plants, January 1, 1976 through December 31, 1978," U.S. Nuclear Regulatory Commission, March 1980.

349. NUREG/CR-1331, "Data Summaries of Licensee Event Reports of Control Rods and Drive Mechanisms at U.S. Commercial Nuclear Power Plants, January 1, 1972 through April 30, 1978," U.S. Nuclear Regulatory Commission, February 1980.

350. NUREG/CR-1730, "Data Summaries of Licensee Event Reports of Primary Containment Penetrations at U.S. Commercial Nuclear Power Plants, January 1, 1972 through December 31, 1978," U.S. Nuclear Regulatory Commission, September 1980.

351. NUREG/CR-1740, "Data Summaries of Licensee Event Reports of Selected Instrumentation and Control Components at U.S. Commercial Nuclear Power Plants from January 1, 1976 to December 31, 1978," U.S. Nuclear Regulatory Commission, May 1981.

352. Memorandum for C. Michelson from E. Brown, "Internal Appurtenances in LWRs," December 24, 1980. [8101150319]

353. NUREG/CR-2641, "The In-Plant Reliability Data Base for Nuclear Power Plant Components: Data Collection and Methodology Report," U.S. Nuclear Regulatory Commission, July 1982.

354. NUREG/CR-2886, "The In-Plant Reliability Data Base for Nuclear Power Plant Components: Interim Data Report - The Pump Component," U.S. Nuclear Regulatory Commission, January 1983.

355. EGG-EA-5502, "User's Guide to BFR, A Computer Code Based on the Binomial Failure Rate Common Cause Model," EG&G, Inc., July 1982.

356. EGG-EA-5623, "Common Cause Fault Rates for Instrumentation and Control Assemblies: Estimates Based on Licensee Event Reports at U.S. Commercial Nuclear Power Plants, 1976-1978," EG&G, Inc., (Rev. 1) September 1982.

357. EGG-EA-5485, "Common Cause Fault Rates for Valves: Estimates Based on Licensee Event Reports at U.S. Commercial Nuclear Power Plants, 1976-1980," EG&G, Inc., (Rev. 1) September 1982.

358. NUREG/CR-2099, "Common Cause Fault Rates for Diesel Generators: Estimates Based on Licensee Event Reports at U.S. Commercial Nuclear Power Plants, 1976-1978," U.S. Nuclear Regulatory Commission, (Rev. 1) June 1982.

359. NUREG/CR-1401, "Estimators for the Binomial Failure Rate Common Cause Model," U.S. Nuclear Regulatory Commission, April 1980.

360. EGG-EA-5289, "Common Cause Fault Rates for Pumps: Estimates Based on Licensee Event Reports at U.S. Commercial Nuclear Power Plants, January 1, 1972 through September 30, 1980," EG&G, Inc., (Rev. 1) August 1982.

361. JBFA-101-82, "Common Cause Screening Methodology Project (FY 81 Technical Progress Report)," JBF Associates, Inc., February 1982.

362. NUREG/CR-2542, "Sensitivity Study Using the FRANTIC II Code for the Unavailability of a System to the Failure Characteristics of the Components and the Operating Conditions," U.S. Nuclear Regulatory Commission, February 1982.

363. NUREG/CR-2332, "Time Dependent Unavailability of a Continuously Monitored Component," U.S. Nuclear Regulatory Commission, August 1981.

364. Memorandum for W. Dircks from S. Chilk, "Systematic Assessment of Licensee Performance," October 20, 1981. [8210080207]

365. NUREG/CR-2515, "Crystal River 3 Safety Study," U.S. Nuclear Regulatory Commission, December 1981.

366. NUREG/CR-2787, "Interim Reliability Evaluation Program: Analysis of the Arkansas Nuclear One - Unit One Nuclear Power Plant," U.S. Nuclear Regulatory Commission, June 1982.

367. NUREG/CR-2802, "Interim Reliability Evaluation Program: Analysis of the Browns Ferry Unit 1 Nuclear Plant," U.S. Nuclear Regulatory Commission, August 1982, (Appendix A) August 1982, (Appendix B) August 1982, (Appendix C) August 1982.

368. Memorandum for ACRS Members from C. Michelson, "Failure of a Feedwater Flow Straightener at San Onofre Nuclear Station, Unit 1," June 13, 1979. [7910180473]

369. SECY-82-396A, "Withdrawal of SECY-82-396 (Federal Policy Statement on Use of Potassium Iodide)," October 15, 1982. [8211040047]

370. SECY-81-676, "Delegation of Rulemaking Authority to the EDO," December 3, 1981. [8201110403]

371. SECY-82-187, "Revised Guidelines for Value-Impact Analyses," May 7, 1982. [8205130275]

372. SECY-82-447, "Draft Report of the Regulatory Reform Task Force," November 3, 1982. [8211160547]

373. NUREG-0499, "Preliminary Statement on General Policy for Rulemaking to Improve Nuclear Power Plant Licensing," U.S. Nuclear Regulatory Commission, December 1978.

374. Memorandum for J. Hendrie from L. Bickwit, "Review of Commission Delegation of Authority," October 4, 1979. [8001150518]

375. Memorandum for R. Minogue from R. Bernero, "Charter of the Regulatory Analysis Branch," October 9, 1981. [8110280720]

376. NRC Letter to All Licensees of Operating Reactors, Applicants for Operating Licenses, and Holders of Construction Permits, "Supplement 1 to NUREG-0737, Requirements for Emergency Response Capability (Generic Letter No. 82-33)," December 17, 1982. [8212060349]

377. Memorandum for W. Minners from B. Snyder, "Schedule for Resolving and Completing Generic Issues," December 16, 1982. [8312290162]

378. Memorandum for S. Boyd from M. Srinivasan, "FY 1983-FY 1984 Office of Nuclear Reactor Regulation Operating Plan," November 17, 1982. [8301100332]

379. Memorandum for H. Denton from R. DeYoung, "Draft Report on the Prioritization of Non-NRR TMI Action Plan Items," January 24, 1983. [8401160474]

380. SECY-93-049, "Implementation of 10 CFR Part 54, 'Requirements for Renewal of Operating Licenses for Nuclear Power Plants,'" March 1, 1993. [9303030337, 9303100375].

381. Memorandum for W. Minners from O. Parr, "Prioritization of Proposed Generic Issue on CRD Accumulator Check Valve Leakage," August 13, 1984. [8408280264]

382. Memorandum for W. Minners from R. Mattson, "Schedules for Resolving and Completing Generic Issues," January 21, 1983. [8301260532]

383. Memorandum for W. Dircks from R. Mattson, "Closeout of TMI Action Plan I.C.1(4), Confirmatory Analyses of Selected Transients," November 12, 1982. [8212080586]

384. Memorandum for T. Speis from R. Vollmer, "Schedules for Resolving and Completing Generic Issues," February 1, 1983. [8401170076]

385. Memorandum for T. Murley from D. Ross, "Use of Equipment Not Classified as Essential to Safety in BWR Transient Analysis," March 10, 1981. [8103240798, 9804090138]

386. Memorandum for T. Novak from R. Frahm, "Summary of Meeting with General Electric on the Use of Non-Safety Grade Equipment," March 7, 1979. [7903220463]

387. NUREG-0410, "NRC Program for the Resolution of Generic Issues Related to Nuclear Power Plants," U.S. Nuclear Regulatory Commission, January 1978.

388. NUREG-0577, "Potential for Low Fracture Toughness and Lamellar Tearing in PWR Steam Generator and Reactor Coolant Pump Supports," U.S. Nuclear Regulatory Commission, (Rev. 1) October 1983.

389. "Indian Point Probabilistic Safety Study," Power Authority of the State of New York and Consolidated Edison Company of New York, Inc., 1982.

390. NUREG-0850, "Preliminary Assessment of Core Melt Accidents at the Zion and Indian Point Nuclear Power Plants and Strategies for Mitigating Their Effects," U.S. Nuclear Regulatory Commission, November 1981.

391. Memorandum for E. Reeves from J. Knight, "Zion Liquid Pathway Analysis," August 8, 1980. [8008210647]

392. Memorandum for J. Funches from R. Mattson, "Request for Approval to Work on Low Priority Generic Safety Issues," November 5, 1982. [8211160524]

393. "TMI-2 Recovery Program Estimate," General Public Utilities Corp., (Rev. 1) July 1981.

394. Memorandum for S. Hanauer, et al., from D. Eisenhut, "Operating Reactor Event Memorandum No. 81-31: Loss of Direct Current (DC) Bus at Millstone Unit 2," March 31, 1981. [8104100493]

395. Memorandum for H. Denton from C. Michelson, "Millstone Unit 2 - Reactor Trip Following De-Energization of a 125 V DC Bus," November 5, 1981. [8112010276]

396. Memorandum for C. Michelson from H. Denton, "AEOD November 1981 Report on the Millstone Unit 2 Loss of 125 V DC Bus Event," January 4, 1982. [8202040017]

397. IEEE Std 279, "Criteria for Protection Systems for Nuclear Power Generating Stations (ANSI N42.7-1972)," The Institute of Electrical and Electronics Engineers, Inc., 1971.

398. Memorandum for R. Tedesco from T. Speis, "Identification of Protection System Instrument Sensing Lines," April 29, 1982. [8205270511]

399. Memorandum to C. Rossi from A. Thadani, "Prioritization of and Transfer of Responsibility for Generic Safety Issue 156.6.1, 'Pipe Break Effects on Systems and Components Inside Containment,'" July 16, 1999. [9908300234]

400. Memorandum for V. Stello from H. Denton, "Standard Review Plan Guidance for Identification of Protection System Instrument Lines," December 29, 1982. [8301070067]

401. Memorandum for H. Denton from V. Stello, "Proposed Standard Review Plan Guidance for Identification of Protection System Instrument Lines," January 27, 1983. [8302180526]

402. Letter to D. Eisenhut (NRC) from T. Dente (BWR Owners' Group), "Analysis of Scram Discharge Volume System Piping Integrity, NEDO-22209 (Prepublication Form)," August 23, 1982. [8208310340]

403. Letter to K. Eccleston (NRC) from T. Dente (BWR Owners' Group), "Transmittal of Supporting Information on Application of Scram Time Fraction to Scram Discharge Volume (SDV) Pipe Break Probability as Used in NEDO-22209," January 28, 1983. [8302010525]

404. Letter to S. Israel (NRC) from J. Hickman (SNL), "Review and Evaluation of the Indian Point Probabilistic Safety Study," August 25, 1982. [8209230166]

405. Memorandum for W. Minners from A. Thadani, et al., "Probability of Core Melt Due to Component Cooling Water System Failures," January 19, 1983. [8301270522]

406. Memorandum for W. Dircks from R. DeYoung, "TMI Action Plan - Status Report," March 4, 1982. [8204290601]

407. Memorandum for W. Dircks from R. DeYoung, "TMI Action Plan - Completed Item," May 11, 1982. [8401170108]

408. NUREG-1509, "Radiation Effects on Reactor Pressure Vessel Supports," U.S. Nuclear Regulatory Commission, May 1996.

409. Memorandum for W. Minners from W. Mills, "Prioritization of Generic Issue III.D.3.5, Radiation Worker Data Base," February 22, 1983. [9705190229]

410. Memorandum for T. Speis from R. Browning, "Draft Report on the Prioritization of Non-NRR TMI Action Plan Items," April 1, 1983. [8304200629, 9705190233]

411. SLI-8211, "Review of BWR Reactor Vessel Water Level Measurement Systems," S. Levy, Inc., July 1982.

412. Memorandum for T. Speis from J. Funches, "Prioritization of Generic Issues - Environmental and Licensing Improvements," February 24, 1983. [8303090540]

413. Memorandum for D. Eisenhut from E. Jordan, "Main Steam Isolation Valve (MSIV) Survey," July 1, 1982. [8209240107]

414. Memorandum for W. Minners from L. Hulman, "Consequence Analyses for BWR Main Steam System Leakage Pathway Generic Issue Evaluation," December 9, 1982. [8301050058]

415. Memorandum for W. Minners from L. Hulman, "MSIV Leakage Consequences," December 23, 1982. [8312290172]

416. NUREG/CR-1908, "Criteria for Safety-Related Nuclear Power Plant Operator Actions: Initial Pressurized Water Reactor (PWR) Simulator Exercises," U.S. Nuclear Regulatory Commission, September 1981.

417. NUREG/CR-2598, "Nuclear Power Plant Control Room Task Analysis: Pilot Study for Pressurized Water Reactors," U.S. Nuclear Regulatory Commission, July 1982.

418. NUREG/CR-2534, "Criteria for Safety-Related Nuclear Power Plant Operator Actions: Initial Boiling Water Reactor (BWR) Simulated Exercises," U.S. Nuclear Regulatory Commission, November 1982.

419. NUREG/CR-3092, "Criteria for Safety-Related Nuclear Power Plant Operator Actions: Initial Simulator to Field Data Calibration," U.S. Nuclear Regulatory Commission, February 1983.

420. IE Bulletin No. 80-14, "Degradation of BWR Scram Discharge Volume Capability," U.S. Nuclear Regulatory Commission, June 12, 1980. [8005050056]

421. IE Bulletin No. 80-17, "Failure of 76 of 185 Control Rods to Fully Insert During Scram at BWR," U.S. Nuclear Regulatory Commission, July 3, 1980. [8005050076]

422. NRC Letter to All BWR Licensees, "BWR Scram Discharge System," December 9, 1980. [8102190299]

423. Memorandum for R. Mattson from D. Eisenhut, "Status of Long-Term Followup of the Indian Point Unit 2 Flooding Event," May 13, 1982. [8205240153]

424. Memorandum for F. Schroeder from T. Speis, "Designation of Inadvertent Containment Flooding as a Generic Issue," August 5, 1982. [8208120379]

425. "Zion Probabilistic Safety Study," Commonwealth Edison Company, 1981.

426. Memorandum for T. Novak from G. Lainas and V. Noonan, "NRR Input to SER on 'Indian Point Unit No. 2 Flood in Containment Due to Containment Cooler Service Water Leaks on 10/17/80,'" April 3, 1981. [8104090906]

427. Memorandum for T. Speis from R. Mattson, "Close-out of TAP-A-16, Steam Effects on BWR Core Spray Distribution (TACS-40066)," March 29, 1983. [8304130488]

428. Memorandum for W. Minners from P. Hayes, "Generic Safety Issue No. 51, Improved Reliability of Open Service Water Systems," April 5, 1983. [9705190249]

429. Memorandum for J. Knight from E. Sullivan, "Review ACRS Consultant Report," January 10, 1980. [8105150033]

430. Memorandum for K. Seyfrit from E. Imbro, "Flow Blockage in Essential Raw Cooling Water System Due to Asiatic Clam Intrusion," March 28, 1983. [8305230539]

431. EPRI NP-1138, "Limiting Factor Analysis of High-Availability Nuclear Plants," Electric Power Research Institute, September 1979.

432. SECY-82-296, "Resolution of AEOD Combination LOCA Concern," July 13, 1982. [8207230202]

433. Memorandum for C. Michelson from E. Brown, "Degradation of Internal Appurtenances and/or Loose Parts in LWRs," June 15, 1982. [8207280317]

434. Memorandum for H. Denton, et al., from C. Michelson, "Flow Blockage in Essential Equipment at ANO Caused by Corbicula sp. (Asiatic Clams)," October 21, 1980. [8011060029]

435. Letter to N. Palladino from P. Shewmon, "Control Room Habitability," August 18, 1982. [8207180073]

436. Letter to J. Ray from W. Dircks, "August 18, 1982, ACRS Letter on Control Room Habitability," January 31, 1983. [8302100196]

437. Memorandum for H. Denton from R. Minogue, "Draft Report on the Prioritization of Non-NRR TMI Action Plan Items," March 29, 1983. [8401160475]

438. Memorandum for G. Cunningham, et al., from W. Dircks, "NRC Actions Required by Enactment of the Nuclear Waste Policy Act of 1982," January 19, 1983. [8507110762]

439. Regulatory Guide 1.149, "Nuclear Power Plant Simulators for Use in Operator Training," U.S. Nuclear Regulatory Commission, April 1981 [8105220400], (Rev. 1) April 1987 [8704300503, 8601160291], (Rev. 2) April 1996 [9604170117].

440. Memorandum for W. Minners from D. Ziemann, "Schedules for Resolving and Completing Generic Issues," April 5, 1983. [8304180758]

441. Memorandum for H. Denton from R. DeYoung, "Commission Paper on the Prioritization of Generic Safety Issues," April 20, 1983. [9705190224]

442. Memorandum for R. Emrit from T. Rothschild, "Establishing Priorities for Generic Safety Issues," April 21, 1983. [8312290167]

443. Memorandum for W. Dircks from R. Mattson, "Closeout of NUREG-0660 Item II.E.5.1, Design Sensitivity of B&W Plants for Operating Plants," March 15, 1983. [8304080415]

444. "Letter to Public Service Electric and Gas Company from D. Fischer (NRC) 'Meeting Summary - Salem Unit - 1 Failure of Reactor Trip Breakers,'" March 14, 1983. [8303210160]

445. NUREG-1000, "Generic Implications of ATWS Events at the Salem Nuclear Power Plant," U.S. Nuclear Regulatory Commission, (Vol. 1) April 1983, (Vol. 2) August 1983.

446. Memorandum for Chairman Ahearne from C. Michelson, "New Unresolved Safety Issues," August 4, 1980. [8010240206]

447. NUREG-0977, "NRC Fact Finding Task Force Report on the ATWS Events at Salem Nuclear Generating Station Unit 1 on February 22 and 25, 1983," U.S. Nuclear Regulatory Commission, March 1983.

448. Memorandum for F. Rowsome from S. Bryan, "Reliability Assurance - Reactor Protection System," July 23, 1981. [8109100509]

449. Memorandum for S. Hanauer from D. Eisenhut, "Potential Generic Issue: BWR Control Rod Test Requirements Following Maintenance," November 26, 1982. [8212160790]

450. Memorandum for R. Mattson from T. Speis, "Potential Generic Issues Related to Scram Systems," April 7, 1983. [8304200351]

451. Memorandum for H. Denton from C. Heltemes, "Potential Design Deficiency in Westinghouse Reactor Protection System," March 10, 1983. [8303230335]

452. Memorandum for C. Heltemes from H. Denton, "Westinghouse Reactor Protection System Design Conformance to IEEE Standard 279," May 2, 1983. [8305180398]

453. Memorandum for H. Denton, et al., from R. Mattson, "Recommended Generic Actions," April 27, 1983. [8305250017]

454. SECY-83-98E, "Salem Restart Evaluation," April 11, 1983. [8304220308]

455. NUREG-0771, "Regulatory Impact of Nuclear Reactor Accident Source Term Assumptions," U.S. Nuclear Regulatory Commission, June 1981.

456. WASH-1248, "Environmental Survey of the Uranium Fuel Cycle," U.S. Atomic Energy Commission, April 1974.

457. NUREG-0116, "Environmental Survey of the Reprocessing and Waste Management Portions of the LWR Fuel Cycle," U.S. Nuclear Regulatory Commission, October 1976.

458. NUREG-0216, "Public Comments on the Environmental Survey of the Reprocessing and Waste Management Portions of the LWR Fuel Cycle," U.S. Nuclear Regulatory Commission, March 1977.

459. NUREG-0252, "The Environmental Effects of Using Coal for Generating Electricity," U.S. Nuclear Regulatory Commission, June 1977.

460. NUREG/CR-1060, "Activities, Effects, and Impacts of the Coal Fuel Cycle for a 1,000 MWe Electric Power Generating Plant," U.S. Nuclear Regulatory Commission, February 1980.

461. NUREG-0332, "Health Effects Attributable to Coal and Nuclear Fuel Cycle Alternatives," U.S. Nuclear Regulatory Commission, November 1977.

462. NUREG/CR-0022,""Need for Power: Determination in the State Decisionmaking Process," U.S. Nuclear Regulatory Commission, March 1978.

463. NUREG/CR-0250, "Regional Econometric Model for Forecasting Electricity Demand by Sector and State," U.S. Nuclear Regulatory Commission, October 1978.

464. NUREG-0555, "Environmental Standard Review Plans for the Environmental Review of Construction Permit Applications for Nuclear Power Plants," U.S. Nuclear Regulatory Commission, May 1979.

465. NUREG-0398, "Federal-State Cooperation in Nuclear Power Plant Licensing," U.S. Nuclear Regulatory Commission, March 1980.

466. NUREG-0942, "Conducting Need-for-Power Review for Nuclear Power Plants," U.S. Nuclear Regulatory Commission, December 1982.

467. NUREG/CR-2423, "Mathematical Simulation of Sediment and Radionuclide Transport in Estuaries," U.S. Nuclear Regulatory Commission, November 1982.

468. NUREG/CR-2823, "A Review of the Impact of Copper Released into Marine and Estuarine Environments," U.S. Nuclear Regulatory Commission, November 1982.

469. NUREG/CR-0892, "Chronic Effects of Chlorination Byproducts on Rainbow Trout, Salmo gairdneri," U.S. Nuclear Regulatory Commission, November 1980.

470. NUREG/CR-0893, "Acute Toxicity and Bioaccummulation of Chloroform to Four Species of Freshwater Fish," U.S. Nuclear Regulatory Commission, August 1980.

471. NUREG/CR-2750, "Socioeconomic Impacts of Nuclear Generating Stations," U.S. Nuclear Regulatory Commission, July 1982.

472. NUREG/CR-2861, "Image Analysis for Facility Siting: A Comparison of Low and High-Attitude Image Interpretability for Land Use/Land Cover Mapping," U.S. Nuclear Regulatory Commission, November 1982.

473. NUREG/CR-2550, "Charcoal Performance Under Simulated Accident Conditions," U.S. Nuclear Regulatory Commission, July 1982.

474. NUREG-0700, "Guidelines for Control Room Design Reviews," U.S. Nuclear Regulatory Commission, September 1981.

475. Memorandum for W. Minners from F. Congel, "Prioritization of Generic Issue 58, Containment Flooding," May 19, 1983. [8306080295]

476. Regulatory Guide 4.2, "Preparation of Environmental Reports for Nuclear Power Stations," U.S. Nuclear Regulatory Commission, July 1976. [7908310195]

477. NUREG/CR-2692, "An Integrated System for Forecasting Electric Energy and Load for States and Utility Service Areas," U.S. Nuclear Regulatory Commission, May 1982.

478. Regulatory Guide 1.57, "Design Limits and Loading Combinations for Metal Primary Reactor Containment System Components," U.S. Nuclear Regulatory Commission, June 1973. [7907100220]

479. Regulatory Guide 1.7, "Control of Combustible Gas Concentrations in Containment Following a Loss-of-Coolant Accident," U.S. Nuclear Regulatory Commission, November 1978. [7812270049]

480. Regulatory Guide 1.109, "Calculation of Annual Doses to Man from Routine Releases of Reactor Effluents for the Purpose of Evaluating Compliance with 10 CFR Part 50, Appendix I," U.S. Nuclear Regulatory Commission, October 1977. [7907100401]

481. Regulatory Guide 1.35, "Inservice Inspection of Ungrouted Tendons in Prestressed Concrete Containments," U.S. Nuclear Regulatory Commission, February 1973, (Rev. 1) June 1974, (Rev. 2) January 1976 [7907100149], (Rev. 3) July 1990 [7809180004].

482. Regulatory Guide 1.90, "Inservice Inspection of Prestressed Concrete Containment Structures with Grouted Tendons," U.S. Nuclear Regulatory Commission, August 1977. [7907100329]

483. ORNL-5470, "CONCEPT-5 User's Manual," Oak Ridge National Laboratory, December 1978.

484. ORNL/TM-6467, "A Procedure for Estimating Nonfuel Operation and Maintenance Costs for Large Steam-Electric Power Plants," Oak Ridge National Laboratory, January 1979.

485. NUREG/CR-2844, "Nonfuel Operation and Maintenance Costs for Large Steam-Electric Power Plants - 1982," U.S. Nuclear Regulatory Commission, September 1982.

486. Memorandum for Z. Rosztoczy, et al., from W. Anderson, "Seismic Scram," January 20, 1983. [8302100005]

487. Memorandum for G. Arndt from G. Burdick, "Review of Seismic Scram Report, UCRL-53037," March 3, 1983. [8303160092]

488. NUREG-0610, "Draft Emergency Action Level Guidelines for Nuclear Power Plants," U.S. Nuclear Regulatory Commission, September 1979.

489. NUREG/CR-2963, "Planning Guidance for Nuclear Power Plant Decontamination," U.S. Nuclear Regulatory Commission, June 1983.

490. Memorandum for H. Denton from C. Michelson, "Potential Generator Missiles - Generator Rotor Retaining Rings," March 16, 1982. [8203300270]

491. NRC Letter to All Licensees of Operating Westinghouse and CE PWRs (Except Arkansas Nuclear One - Unit 2 and San Onofre Units 2 and 3), "Inadequate Core Cooling Instrumentation System (Generic Letter No. 82-28)," December 10, 1982. [8212140103]

492. Memorandum for C. Michelson from H. Denton, "H. B. Robinson RCS Leak on January 29, 1981," June 15, 1981. [8107010140]

493. Memorandum for C. Michelson from H. Denton, "January 19, 1981, Memorandum on Degradation of Internal Appurtenances in LWR," April 30, 1981. [8105150032]

494. Memorandum for C. Michelson from H. Denton, "AEOD Preliminary Report on Calvert Cliffs Unit 1 Loss of Service Water," August 5, 1981. [8108170221]

495. Memorandum for C. Michelson from H. Denton, "Steam Generator Overfill and Combined Primary and Secondary Blowdown," May 27, 1981. [8106100241]

496. Memorandum for H. Denton from C. Michelson, "Concerns Relating to the Integrity of a Polymer Coating for Surfaces Inside Containment (IE Draft Bulletin No. 80-21)," August 29, 1980. [8210120370, 8009110599]

497. Memorandum for H. Denton and V. Stello from C. Michelson, "Immediate Action Memo: Common Cause Failure Potential at Rancho Seco - Desiccant Contamination of Air Lines," September 15, 1981. [8109280036]

498. Memorandum for C. Michelson from H. Denton, "AEOD Immediate Action Memo on Contamination of Instrument Air Lines at Rancho Seco," October 26, 1981. [8111300391]

499. Memorandum for H. Denton, et al., from C. Michelson, "Case Study Report on San Onofre Unit 1 Loss of Salt Water Cooling Event on March 10, 1980," August 12, 1980. [8208270684]

500. Memorandum for C. Michelson from H. Denton, "NRR Comments on AEOD Final Report: Case Study Report on San Onofre Unit 1 Loss of Salt Water Cooling Event of March 10, 1980," October 8, 1982. [8211030304]

501. IE Bulletin No. 79-24, "Frozen Lines," U.S. Nuclear Regulatory Commission, September 27, 1979. [7908220114]

502. Memorandum for H. Denton and V. Stello from C. Michelson, "Inoperability of Instrumentation Due to Extreme Cold Weather," June 15, 1981. [8107010161]

503. Memorandum for C. Michelson from H. Denton, "AEOD Memorandum on the Inoperability of Instrumentation Due to Extreme Cold Weather," August 14, 1981. [8109110138]

504. Draft Regulatory Guide and Value/Impact Statement, Task IC 126-5, "Instrument Sensing Lines," U.S. Nuclear Regulatory Commission, March 1982. [8204190028]

505. Regulatory Guide 1.151, "Instrument Sensing Lines," U.S. Nuclear Regulatory Commission, July 1983. [8808230051]

506. Federal Register Notice 48 FR 36029, "Regulatory Guide; Issuance, Availability," August 8, 1983.

507. Memorandum for C. Michelson from H. Denton, "Interlocks and LCO's for Redundant Class 1E Tie Breakers (Point Beach Nuclear Plant Units 1 and 2)," October 16, 1980. [8011050312]

508. Memorandum for F. Schroeder from L. Rubenstein, "Review of General Electric Topical Report NEDO-10174, Revision 1," August 18, 1982. [8209030003]

509. Memorandum for C. Michelson from H. Denton, "NRR Comments on AEOD Final Report: Survey of Valve Operator-Related Events Occurring During 1978, 1979, and 1980," August 19, 1982. [8404110426]

510. Memorandum for C. Michelson from H. Denton, "Effects of Fire Protection System Actuation on Safety-Related Equipment," August 27, 1982. [8506050357]

511. "Value-Impact Analysis of Recommendations Concerning Steam Generator Tube Degradations and Rupture Events," Science Applications, Inc., February 2, 1983.

512. Memorandum for D. Eisenhut from T. Speis, "DST Prioritization of Steam Generator Requirements," May 4, 1983. [8305230682]

513. SECY-82-186A, "Make-up Nozzle Cracking in Babcock and Wilcox (B&W) Plants," July 23, 1982. [8209300376]

514. Letter to J. Stolz (NRC) from G. Westafer (Florida Power Corporation), "Crystal River Unit 3, Docket No. 50-302, Operating License No. DPR-72, Safe End Task Force Action Plan," February 28, 1983. [8303040544]

515. Memorandum for W. Minners from D. Dilanni, "Proposed Generic Issue 'PORV and Block Valve Reliability,'" June 6, 1983. [8307050513]

516. Memorandum for W. Johnston and L. Rubenstein from T. Speis, "Failure of Resin Demineralizer Systems and Their Effects on Nuclear Power Plant Safety," August 6, 1982. [8208230475]

517. Memorandum for the Atomic Safety & Licensing Boards for: Callaway Plant, Unit 1; Comanche Peak Steam Electric Station, Units 1 & 2; and the Atomic Safety & Licensing Appeal Board for Virgil C. Summer Nuclear Station, Unit 1, from T. Novak, "Board

Notification - Control Rod Drive Guide Tube Support Pin Failures at Westinghouse Plants (Board Notification No. 82-81)," August 16, 1982. [8209290318]

518. Memorandum for D. Eisenhut from J. Crews, "NRC Lead Responsibility for Possibly Detached Thermal Sleeves - Trojan Nuclear Plant - Docket No. 50-344," June 18, 1982. [8710220041]

519. Memorandum for W. Minners from L. Hulman, "Generic Issue on Iodine Coolant Activity Limiting Conditions for Operation," June 10, 1983. [8307080562]

520. NRC Letter to All Licensees of Operating Reactors, Applicants for Operating Licenses, and Holders of Construction Permits, "Required Actions Based on Generic Implications of Salem ATWS Events," (Generic Letter No. 83-28), July 8, 1983 [8307080169], (Supplement 1) October 7, 1992 [9210050243].

521. SECY-83-248, "Generic Actions for Licensees and Staff in Response to the ATWS Events at Salem Unit 1," June 22, 1983. [8307110103]

522. AEOD/P301, "Report on the Implications of the ATWS Events at the Salem Nuclear Power Plant on the NRC Program for Collection and Analysis of Operational Experience," Office for Analysis and Evaluation of Operational Data, U.S. Nuclear Regulatory Commission, July 1983. [8307140507]

523. Memorandum for C. Heltemes from H. Denton, "AEOD Final Report on the Implications of the ATWS Events at the Salem Nuclear Power Plant on the NRC Program for Collection and Analysis of Operational Experience," July 21, 1983. [8307290045]

524. Memorandum for R. Mattson from T. Speis, "Draft CRGR Package on A-30, DC Power," May 24, 1983. [8306030487]

525. Memorandum for H. Denton from C. Heltemes, "Engineering Evaluation Report, Investigation of Backflow Protection in Common Equipment and Floor Drain Systems to Prevent Flooding of Vital Equipment in Safety-Related Compartments," March 11, 1983. [8303290078]

526. NUREG/CR-3226, "Station Blackout Accident Analyses (Part of NRC Task Action Plan A-44)," U.S. Nuclear Regulatory Commission, May 1983.

527. IE Information Notice No. 83-44, "Potential Damage to Redundant Safety Equipment as a Result of Backflow Through the Equipment and Floor Drain System," U.S. Nuclear Regulatory Commission, July 1, 1983 [8305110502], (Supplement 1) August 30, 1990 [9008240057].

528. Memorandum for B. Liaw from H. Berkow, "OMB Clearance Renewal - Monitoring of Fatigue Transient Limits for Reactor Coolant System," May 13, 1983. [9705190223]

529. Memorandum for H. Berkow from W. Minners, "OMB Clearance Renewal -Monitoring of Fatigue Transient Limits for Reactor Coolant System," June 1, 1983. [8306090456]

530. Letter to R. DeYoung (NRC) from J. Taylor (B&W), "Unanalyzed Reactor Vessel Thermal Stress During Cooldown," March 18, 1983. [8303250020]

531. Memorandum for R. Vollmer from W. Minners, "B&W Notification Concerning an Unanalyzed Reactor Vessel Thermal Stress During Cooldown," April 7, 1983. [8304140390]

532. Regulatory Guide 1.93, "Availability of Electric Power Sources," U.S. Nuclear Regulatory Commission, December 1974. [7907100337]

533. Memorandum for W. Minners from R. Bosnak, "B&W Notification Concerning an Unanalyzed Reactor Vessel Thermal Stress During Cooldown," April 26, 1983. [8305240235]

534. Memorandum for N. Palladino, et al., from D. Eisenhut, "Unanalyzed Reactor Vessel Thermal Stress During Cooldown (Board Notification #BN-83-42)," April 12, 1983. [8304220651]

535. CE-NPSD-154, "Natural Circulation Cooldown, Task 430 Final Report," Combustion Engineering, Inc., October 1981. [8304280091]

536. B&W Document No. 86-1140819-00, "Reactor Vessel Head Cooldown During Natural Circulation Cooldown Transients," Babcock & Wilcox Company, February 8, 1983. [8302160171]

537. Memorandum for W. Dircks from R. Fraley, August 18, 1982. [8207180092]

538. Memorandum for R. Fraley from H. Denton, "ACRS Inquiry on Pipe Break Effects on CRD Hydraulic Lines," October 29, 1982. [8211120045]

539. Letter to W. Dircks from J. Ebersole, "ACRS Comments Regarding Potential Pipe Break Effects on Control Rod Drive Hydraulic Lines in the Drywells of BWR Mark I and II Containments," March 16, 1983. [8303290428]

540. BNL-NUREG-28109, "Thermal-Hydraulic Effects on Center Rod Drop Accidents in a Boiling Water Reactor," Brookhaven National Laboratory, July 1980. [8101220642]

541. Memorandum for B. Sheron from C. Berlinger, "ACRS Request for Information Related to LOCA Effects on CRD Hydraulic Lines," October 19, 1982. [8211040446]

542. Memorandum for R. Mattson, et al., from D. Eisenhut, "Potential Safety Problems Associated With Locked Doors and Barriers in Nuclear Power Plants," May 31, 1983. [8306200435]

543. Memorandum for T. Speis from R. Mattson, "Proposed Generic Issue on Beyond Design Basis Accidents in Spent Fuel Pools," August 10, 1983. [8308180730]

544. NUREG/CR-0649, "Spent Fuel Heatup Following Loss of Water During Storage," U.S. Nuclear Regulatory Commission, May 1979.

545. Memorandum for Z. Rosztoczy from P. Williams, "Trip Report: International Meeting on Severe Fuel Damage and Visit to Power Burst Facility," April 25, 1983. [8305060661]

546. Memorandum to C. Rossi from D. Cool, "NMSS Input for Second Quarter FY-2000 Update of the Generic Issues Management Control System," April 18, 2000.

547. SECY-95-245, "Completion of the Fatigue Action Plan," September 25, 1995. [9509290040]

548. Memorandum for W. Dircks from R. DeYoung, "TMI Action Plan Completed Items," January 26, 1983. [8303090323]

549. NUREG/CR-2039, "Dynamic Combinations for Mark II Containment Structures," U.S. Nuclear Regulatory Commission, June 1982.

550. NUREG/CR-1890, "ABS, SRSS and CDF Response Combination Evaluation for Mark III Containment and Drywell Structures," U.S. Nuclear Regulatory Commission, June 1982.

551. Letter to N. Palladino from J. Ray, "Need for Rapid Depressurization Capability in Newer Combustion Engineering, Inc. Plants," October 18, 1983. [8311010118]

552. Memorandum for W. Minners from B. Siegel, "Proposed Generic Issue 'Reliability of Vacuum Breakers Connected to Steam Discharge Lines Inside BWR Containments,'" November 3, 1983. [8312140360]

553. Memorandum for D. Eisenhut from J. Olshinski, "Loss of High Head Injection Capability at McGuire Unit 1 and Reconsideration of Technical Specification 3.0.3 and 3.5.2," April 12, 1982. [8802120046]

554. Memorandum for D. Eisenhut, et al., from H. Denton, "Development of Generic Recommendations Based on the Review of the January 25, 1982 Steam Generator Tube Rupture at Ginna," May 3, 1982. [8205280089]

555. Letter to D. Eisenhut (NRC) from D. Waters (BWR Owners' Group), "BWR Owners' Group Evaluations of NUREG-0737 Requirements II.K.3.16 and II.K.3.18," March 31, 1981. [8104200300]

556. Memorandum for G. Lainas, et al., from W. Houston, "Evaluation of BWR Owners' Group Generic Response to Item II.K.3.16 of NUREG-0737, 'Reduction of Challenges and Failures of Relief Valves - Feasibility Study and System Modification,'" April 1, 1983. [8711060070]

557. Memorandum for H. Denton and V. Stello from C. Michelson, "Calvert Cliffs Unit 1 Loss of Service Water," June 19, 1981. [8107060505]

558. Memorandum for H. Denton and R. DeYoung from C. Michelson, "Calvert Cliffs Unit 1 Loss of Service Water on May 20, 1980," December 17, 1981. [8201150431]

559. Memorandum for C. Michelson from H. Denton, "NRR Comments on AEOD Final Report: Calvert Cliffs Unit 1 Loss of Service Water on May 20, 1980," September 23, 1982. [8210180230]

560. Memorandum for H. Denton from C. Heltemes, "Response to NRR Comments on AEOD Report, 'Calvert Cliffs Unit 1 Loss of Service Water on May 20, 1980,'" May 2, 1983. [8305110577]

561. Memorandum for W. Houston and L. Rubenstein from F. Miraglia, "Response to NRR Comments on AEOD Report, 'Calvert Cliffs Unit 1 Loss of Service Water on May 20, 1980,'" June 2, 1983. [8306080036]

562. Memorandum for F. Miraglia from W. Houston and L. Rubenstein, "Comments to AEOD Memo dated May 2, 1983, on Calvert Cliffs, Unit 1, Loss of Service Water on May 20, 1980," July 22, 1983. [8308030493]

563. Memorandum for C. Heltemes from H. Denton, "Response to NRR Comments on AEOD Report, 'Calvert Cliffs Unit 1 Loss of Service Water on May 20, 1980,'" September 15, 1983. [8309270470]

564. Memorandum for R. Baer from K. Seyfrit, "Case Study, 'Calvert Cliffs Unit 1 Loss of Service Water on May 29, 1980,'" August 18, 1983. [8308290487]

565. IE Information Notice No. 83-77, "Air/Gas Entrainment Events Resulting in System Failures," U.S. Nuclear Regulatory Commission, November 14, 1983. [8311010015]

566. Memorandum for G. Holahan from W. Minners, "Prioritization of Issue 36: Loss of Service Water at Calvert Cliffs Unit 1," November 10, 1983. [8311180373]

567. Letter to A. Lundvall (Baltimore Gas and Electric Company) from D. Eisenhut (NRC), Docket No. 50-317, September 15, 1983. [8309270504]

568. Memorandum for W. Houston and L. Rubenstein from F. Schroeder, "Request for Reactor Systems Branch and Auxiliary Systems Branch Support for Plant Visits on USI A-45," November 28, 1983. [8312150068]

569. AEOD/C102, "Engineering Evaluation of the H. B. Robinson Reactor Coolant System Leak on January 29, 1981," Office for Analysis and Evaluation of Operational Data, U.S. Nuclear Regulatory Commission, March 23, 1981. [8104150060]

570. Memorandum for V. Stello from H. Denton, "Issuance of Revised Section 7.1, Appendix A to this Section, Section 7.5 and Section 7.7 of the Standard Review Plan, NUREG-0800," March 9, 1984. [8404160228]

571. Memorandum for H. Denton from V. Stello, "SRP Changes Concerning Resolution of Generic Issue 45, Inoperability of Instrumentation due to Extreme Cold Weather," April 3, 1984. [8404180510]

572. Memorandum for G. Lainas from F. Rowsome, "Safety Evaluation of the Westinghouse Licensees' Responses to TMI Action Item II.K.3.2," July 22, 1983. [8308040054]

573. Memorandum for G. Lainas from F. Rowsome, "Safety Evaluation of the B&W Licensees' Responses to TMI Action Item II.K.3.2," August 24, 1983. [8308310422]

574. Memorandum for G. Lainas from F. Rowsome, "Safety Evaluation of the CE Licensees' Responses to TMI Action Item II.K.3.2," August 26, 1983. [8309060394]

575. Memorandum for W. Minners from B. Sheron, "Proposed Generic Issue on PORV and Block Valve Reliability," June 27, 1983. [8307180224]

576. Memorandum for R. Riggs from F. Cherny, "Comments on Draft Write-up of Prioritization of Generic Issue 70 'PORV and Block Valve Reliability,'" December 21, 1983. [8401030003]

577. Memorandum for H. Denton, et al., from C. Heltemes, "Case Study Report - Low Temperature Overpressure Events at Turkey Point Unit 4," September 26, 1983. [8310060171]

578. NUREG-0748, "Operating Reactors Licensing Actions Summary," U.S. Nuclear Regulatory Commission, (Vol. 5, No. 11) February 1986.

579. NUREG-0694, "TMI-Related Requirements for New Operating Licenses," U.S. Nuclear Regulatory Commission, June 1980.

580. NUREG-0645, "Report of the Bulletins & Orders Task Force of the Office of Nuclear Reactor Regulation," U.S. Nuclear Regulatory Commission, (Vol. 1) January 1980, (Vol. 2) January 1980.

581. NUREG-0909, "NRC Report on the January 25, 1982 Steam Generator Tube Rupture at R.E. Ginna Nuclear Power Plant," U.S Nuclear Regulatory Commission, April 1982.

582. NUREG-0713, "Occupational Radiation Exposure at Commerical Nuclear Power Reactors - 1981," U.S Nuclear Regulatory Commission, (Vol. 1) March 1981, (Vol. 2) December 1981, (Vol. 3) November 1982, (Vol. 4) November 1983, (Vol. 5) March 1985, (Vol. 6) September 1986, (Vol. 7) April 1988.

583. EPRI NP-2292, "PWR Safety and Relief Valve Test Program," Electric Power Research Institute, December 1982.

584. EPRI NP-1139, "Limiting Factor Analysis of High Availability Nuclear Plants," Electric Power Research Institute, August 1979.

585. EPRI P-2410-SR, "Technical Assessment Guide," Electric Power Research Institute, May 1982.

586. WCAP-9804, "Probabilistic Analysis and Operational Data in Response to NUREG-0737 Item II.K.3.2 for Westinghouse NSSS Plants," Westinghouse Electric Corporation, February 1981. [8103160257]

587. "Accident Sequence Evaluation Program, Phase II Workshop Report," Sandia National Laboratories, EG&G Idaho, Inc., and Science Applications, Inc., September 1982.

588. Letter to Director (NRR) from K. Cook (Louisiana Power & Light), "Waterford SES Unit 3, Docket No. 50-382, Depressurization and Decay Heat Removal," October 27, 1983. [8311010259]

589. Letter to W. Dircks (NRC) from E. Van Brunt (Arizona Public Service Company), "Palo Verde Nuclear Generating Station (PVNGS), Units 1, 2, and 3, Docket Nos. STN-50-528/529/530," November 7, 1983. [8312230233]

590. ALO-75 (TR-3459-1), "Pilot Program to Identify Valve Failures Which Impact the Safety and Operation of Light Water Nuclear Power Plants," Teledyne Engineering Services, January 11, 1980.

591. IE Information Notice No. 82-45, "PWR Low Temperature Overpressure Protection," U.S. Nuclear Regulatory Commission, November 19, 1982. [8208190253]

592. IE Information Notice No. 82-17, "Overpressurization of Reactor Coolant System," U.S. Nuclear Regulatory Commission, June 10, 1982. [8204210383]

593. SECY-84-76, "Proposed Rulemaking for Operator Licensing and for Training and Qualifications of Civilian Nuclear Power Plant Personnel," February 13, 1984. [8403260357]

594. Letter to E. Wilkinson (INPO) from W. Dircks (NRC), November 23, 1983. [8312090099]

595. SECY-83-52A, "Final Rulemaking Concerning Licensed Operator Staffing at Nuclear Power Units and Draft Policy Statement on Shift Crew Qualifications," March 14, 1983. [8304010029]

596. Memorandum for W. Dircks from S. Chilk, "Staff Requirements - Affirmation/ Discussion and Vote, 3:35 p.m., Thursday, April 21, 1983, Commissioners' Conference Room (Open to Public Attendance)," April 28, 1983. [9705190263]

597. Federal Register Notice 48 FR 33850, "Licensee Event Report System," July 26, 1983.

598. Memorandum for W. Dircks from R. Mattson, "Closeout of TMI Action Plan Task III.D.2.5, 'Offsite Dose Calculation Manual,'" January 17, 1984. [8402020114]

599. NUREG/CR-3332, "Radiological Assessment - A Textbook on Environmental Dose Analysis," U.S. Nuclear Regulatory Commission, September 1983.

600. NUREG-0978, "Mark III LOCA-Related Hydrodynamic Load Definition," U.S. Nuclear Regulatory Commission, August 1984.

601. Memorandum for T. Combs from H. Denton, "Revised SRP Section 6.2.1.1.C of NUREG-0800," September 10, 1984. [8409180459]

602. Memorandum for T. Speis from R. Mattson, "Status of Generic Issues 40 and 65 Assigned to DSI," December 27, 1983. [8401170445]

603. Regulatory Guide 1.45, "Reactor Coolant Pressure Boundary Leakage Detection Systems," U.S. Nuclear Regulatory Commission, May 1973. [7907100185]

604. SECY-81-641, "Electromagnetic Pulse (EMP) - Effects on Nuclear Power Plants," November 5, 1981. [8202090418, 8111250553]

605. SECY-82-157, "Status Report on the Evaluation of the Effects of Electromagnetic Pulse (EMP) on Nuclear Power Plants," April 13, 1982. [8205050108]

606. SECY-83-367, "Staff Study of Electromagnetic Pulse (EMP) Effects on Nuclear Power Plants and Discussion of Related Petitions for Rulemaking (PRM-50-32, 32A, and 32B)," September 6, 1983. [8312210152]

607. Memorandum for W. Dircks from S. Chilk, "SECY-83-367 - Staff Study of Electromagnetic Pulse (EMP) Effects on Nuclear Power Plants and Discussion of Related Petition for Rulemaking (PRM-50-32, 32A, and 32B)," November 15, 1983. [8402270019]

608. IE Information Notice No. 82-39, "Service Degradation of Thick-Walled Stainless Steel Recirculation Systems at BWR Plants," U.S. Nuclear Regulatory Commission, September 21, 1982. [8208190229]

609. IE Bulletin No. 82-03, "Stress Corrosion Cracking in Thick-Wall Large Diameter, Stainless Steel Recirculation System Piping at BWR Plants," U.S. Nuclear Regulatory Commission, October 14, 1982 [8208190238], (Rev. 1) October 28, 1982 [8208190240].

610. IE Bulletin No. 83-02, "Stress Corrosion Cracking in Large Diameter Stainless Steel Recirculation System Piping at BWR Plants," U.S. Nuclear Regulatory Commission, March 4, 1983. [8212060368]

611. NUREG-1061, "Report of the U.S. Nuclear Regulatory Commission Piping Review Committee," U.S. Nuclear Regulatory Commission, (Vol. 1) August 1984, (Vol. 2) April 1985, (Vol. 3) November 1984, (Vol. 4) December 1984, (Vol. 5) April 1985.

612. SECY-83-267, "Status Report on Observation of Pipe Cracking at BWRs," July 1, 1983. [8307250565]

613. SECY-83-267A, "Update of Status Report on Observation of Pipe Cracking at BWRs (SECY-83-267)," July 11, 1983. [8307250578]

614. SECY-83-267B, "Update of Status Report on Observation of Pipe Cracking at BWRs (SECY-83-267 and 267A)," August 8, 1983. [8308230648]

615. SECY-83-267C, "Staff Requirements for Reinspection of BWR Piping and Repair of Cracked Piping," November 7, 1983. [8311160350]

616. SECY-84-9, "Report on the Long Term Approach for Dealing with Stress Corrosion Cracking in BWR Piping," January 10, 1984. [8402230344]

617. SECY-84-9A, "Update of Status Report on BWR Pipe Cracks and Projection of Upcoming Licensee Actions," January 27, 1984. [8402230347]

618. SECY-84-166, "Update of Status Report on BWR Pipe Cracks and Projection of Upcoming Licensee Actions," April 20, 1984. [8405180011]

619. SECY-84-301, "Staff Long Range Plan for Dealing with Stress Corrosion Cracking in BWR Piping," July 30, 1984. [8408090406]

620. NRC Letter to All Licensees of Operating Reactors, Applicants for Operating License, and Holders of Construction Permits for Boiling Water Reactors, "Inspections of BWR Stainless Steel Piping," (Generic Letter 84-11), April 19, 1984. [8404230029]

621. NUREG-0992, "Report of the Committee to Review Safeguards Requirements at Power Reactors," U.S. Nuclear Regulatory Commission, May 1983.

622. Memorandum for T. Speis from R. Mattson, "Fuel Crumbling During LOCA,' February 2, 1983. [8302170511]

623. Memorandum for H. Denton from D. Eisenhut, "Potential Safety Problems Associated with Locked Doors and Barriers in Nuclear Power Plants," December 22, 1983. [8401130140]

624. Memorandum for D. Eisenhut from H. Denton, "Safety-Safeguards Interface," January 16, 1984. [8402010286]

625. Memorandum for H. Thompson from D. Eisenhut, "Potential Safety Problems Associated with Locked Doors and Barriers in Nuclear Power Plants," January 30, 1984. [8402140525]

626. Memorandum for T. Speis from H. Thompson, "Submittal of Potential Generic Issue Associated with Locked Doors and Barriers," June 8, 1984. [8407060042]

627. SECY-83-311, "Proposed Insider Safeguards Rules," July 29, 1983. [8308190179]

628. IE Information Notice No. 83-36, "Impact of Security Practices on Safe Operations," U.S. Nuclear Regulatory Commission, June 9, 1983. [8305110464]

629. Memorandum for H. Thompson from D. Morrison, "Closeout of Generic Safety Issue 78, 'Monitoring of Fatigue Transient Limits for Reactor Coolant System (RCS)' and Generic Safety Issue 166, 'Adequacy of Fatigue Life of Metal Components,'" February 5, 1997. [9703050391]

630. Memorandum for W. Minners from F. Miraglia, "Proposed Generic Issue - Technical Specifications for Anticipatory Trips," February 23, 1984. [8403080271]

631. Memorandum for F. Miraglia from W. Houston, "Task Interface Agreement Task No. 83-77 (TAC 40002, PA-157)," November 29, 1983. [8401060510]

632. NUREG/CR-6117, "Neutron Spectra at Different High Flux Isotope Reactor (HFIR) Pressure Vessel Surveillance Locations," U.S. Nuclear Regulatory Commission, December 1993.

633. Memorandum for P. Check from H. Richings, "Some Notes on PWR (W) Power Distribution Probabilities for LOCA Probabilistic Analyses," July 5, 1977.

634. NUREG-0630, "Cladding Swelling and Rupture Models for LOCA Analysis," U.S. Nuclear Regulatory Commission, April 1980.

635. Memorandum for G. Holahan and W. Minners from R. Mattson, "Disposition of AEOD Engineering and Technical Evaluation Reports," April 10, 1984. [9705190219]

636. Memorandum for R. DeYoung and H. Denton from C. Heltemes, "Vapor Binding of Auxiliary Feedwater Pumps," November 21, 1983. [8312070028]

637. AEOD/C404, "Steam Binding of Auxiliary Feedwater Pumps," Office for Analysis and Evaluation of Operational Data, U.S. Nuclear Regulatory Commission, July 1984. [8408060083]

638. Memorandum for H. Denton from C. Michelson, "Tie Breaker Between Redundant Class 1E Buses - Point Beach Nuclear Plant, Units 1 and 2," August 27, 1980. [8009150214, 8009160668]

639. Letter to J. Keppler (NRC) from C. Fay (Wisconsin Electric Power Company), "Docket No. 50-301, Point Beach Nuclear Plant Unit 2 Licensee Event Report No. 80-005/03L-0," June 27, 1980. [8007080381]

640. Memorandum for H. Denton from C. Heltemes, "Special Study Report - Human Error in Events Involving Wrong Unit or Wrong Train," January 13, 1984. [8401310079]

641. IE Information Notice No. 84-51, "Independent Verification," U.S. Nuclear Regulatory Commission, June 26, 1984. [8406250214]

642. IE Information Notice No. 84-58, "Inadvertent Defeat of Safety Function Caused by Human Error Involving Wrong Unit, Wrong Train, or Wrong System," U.S. Nuclear Regulatory Commission, July 25, 1984. [8407230079]

643. Memorandum for H. Denton from C. Heltemes, "Human Error in Events Involving Wrong Unit or Wrong Train," August 8, 1984. [9705190238]

644. Memorandum for D. Eisenhut, et al., from H. Thompson, "Maintenance and Surveillance Program Implementation Plan," July 7, 1984. [8407160259]

645. Memorandum for C. Heltemes from H. Denton, "Special Study Report - Human Errors in Events Involving Wrong Unit or Wrong Train," May 2, 1984. [8405170027]

646. Memorandum for C. Heltemes from H. Denton, "Human Error in Events Involving Wrong Unit or Wrong Train," September 17, 1984. [8410040282]

647. Memorandum for T. Speis from H. Denton, "Resolution of Generic Issue B-26, 'Structural Integrity of Containment Penetrations,'" September 27, 1984. [8410120090]

648. Memorandum for T. Speis from H. Denton, "Closeout of Generic Issue B-54, 'Ice Condenser Containments,'" October 22, 1984. [8411050142]

649. NUREG/CR-3716, "CONTEMPT 4/MOD 4," U.S. Nuclear Regulatory Commission, March 1984.

650. NUREG/CR-4001, "CONTEMPT 4/MOD 5," U.S. Nuclear Regulatory Commission, September 1984.

651. NUREG-0985, "U.S. Nuclear Regulatory Commission Human Factors Program Plan," U.S. Nuclear Regulatory Commission, August 1983, (Rev. 1) September 1984, (Rev. 2) April 1986.

652. Memorandum for W. Dircks from R. DeYoung, "Elimination of Duplicative Tracking Requirements for Revision of Regulatory Guide 1.33," July 26, 1984. [9705190264]

653. NUREG/CR-3123, "Criteria for Safety-Related Nuclear Power Plant Operator Actions: 1982 Pressurized Water Reactor (PWR) Simulator Exercises," U.S. Nuclear Regulatory Commission, June 1983.

654. Memorandum for W. Dircks from H. Thompson, "Closeout of TMI Action Plan Task I.G.2, 'Scope of Test Program,'" October 5, 1984. [8410160524]

655. Memorandum for W. Dircks from H. Denton, "Generic Issue II.A.1, 'Siting Policy Reformulation,'" September 17, 1984. [8410090175]

656. Memorandum for W. Dircks from H. Denton, "Closeout of TMI Action Plan Task II.E.5.2, Transient Response of B&W Designed Reactors," September 28, 1984. [8410110596]

657. Memorandum for D. Crutchfield from D. Eisenhut, "TMI Action Plan Task II.E.5.2," November 6, 1984. [8411270129]

658. NUREG-1054, "Simplified Analysis for Liquid Pathway Studies," U.S. Nuclear Regulatory Commission, August 1984.

659. Memorandum for H. Denton from R. Vollmer, "ESRP 7.1.1 'Environmental Impacts of Postulated Accidents Involving Radioactive Materials - Releases to Groundwater,'" September 25, 1984. [8410100758]

660. Memorandum for W. Dircks from H. Denton, "Generic Issue III.D.2.3 'Liquid Pathway Radiological Control,'" October 29, 1984. [8411190057]

661. Memorandum for H. Denton from C. Heltemes, "Failures of Class 1E Safety-Related Switchgear Circuit Breakers to Close on Demand," April 29, 1983. [8305230511]

662. Memorandum for C. Heltemes from H. Denton, "AEOD April 1983 Report on Failures of Class 1E Safety-Related Switch Gear Circuit Breakers to Close on Demand," June 17, 1983. [8306280125]

663. IE Information Notice No. 83-50, "Failures of Class 1E Safety-Related Switchgear Circuit Breakers to Close on Demand," August 1, 1983. [8306270418]

664. Memorandum for D. Eisenhut from R. Spessard, "Unmonitored Failures of Class 1E Safety-Related Switchgear Circuit Breakers and Power Supplies (AITS-F03052383)," June 1, 1984. [8408230490]

665. NUREG/CR-2989, "Reliability of Emergency AC Power System at Nuclear Power Plants," U.S. Nuclear Regulatory Commission, July 1983.

666. Memorandum for T. Speis from H. Denton, "Resolution of Generic Issue B-12: BWR Jet Pump Integrity," September 25, 1984. [8410030458]

667. Memorandum for T. Speis from H. Denton, "Resolution of Generic Issue 69: Make-up Nozzle Cracking in B&W Plants," September 27, 1984. [8410150536]

668. Memorandum for H. Denton from R. Minogue, "Comments on Generic Issue 79, 'Unanalyzed Reactor Vessel Thermal Stress During Natural Convection Cooldown,'" October 5, 1983. [8310260398]

669. Letter to P. Kadambi (NRC) from F. Miller (B&W Owners Group Analysis Committee), "Transmittal of RV Head Stress Evaluation Program Results," October 15, 1984. [8410190186]

670. Memorandum for H. Denton from R. Mattson, "Generic Issue B-60, Loose Parts Monitoring Systems for Operating Reactors (TACS 52325)," January 10, 1984. [8401180046]

671. Letter to N. Palladino from P. Shewmon, "Control Room Habitability," August 18, 1982. [8207180073]

672. Memorandum for J. Larkins from J. Murphy, "Proposed Resolution of GSI-15, 'Radiation Effects on Reactor Pressure Vessel Supports,'" June 22, 1994. [9407140032]

673. Letter to W. Dircks from J. Ebersole, "ACRS Subcommittee Report on Control Room Habitability," May 17, 1983. [8305260104]

674. Memorandum for W. Dircks from H. Denton, "Control Room Habitability," July 27, 1983. [8308180433]

675. Memorandum for H. Denton from W. Dircks, "Control Room Habitability," August 15, 1983. [8309160034]

676. Memorandum for T. Murley, et al., from H. Denton, " Control Room Habitability," September 19, 1983. [8310120463]

677. Letter to W. Milstead (NRC) from T. Powers (PNL), "A Probabilistic Examination of Nuclear Power Plant Control Room Habitability During Various Accident Scenarios," December 3, 1984. [8412050472]

678. Memorandum for W. Dircks from H. Denton, "Control Room Habitability," June 29, 1984. [8407100196]

679. Memorandum for T. Speis from R. Bernero, "Revised Schedule for Generic Issue 83, Control Room Habitability," September 28, 1984. [8410110484]

680. NUREG/CR-2258, "Fire Risk Analysis for Nuclear Power Plants," U.S. Nuclear Regulatory Commission, September 1981.

681. NUREG-0844, "NRC Integrated Program for the Resolution of Unresolved Safety Issues A-3, A-4, A-5 Regarding Steam Generator Tube Integrity," U.S. Nuclear Regulatory Commission, September 1988.

682. Note to W. Kane from G. Holahan, "Background Information Relating to the Assessment of the Offsite Consequences of Non-Core Melt, Steam Generator Tube Rupture Events," October 24, 1983. [9705190255]

683. Memorandum for W. Johnston from R. Ballard, "Disputed Procedures for Estimating Probable Maximum Precipitation," January 13, 1984. [8401260466]

684. Hydrometeorological Report No. 52, "Application of Probable Maximum Precipitation Estimates - United States East of the 105th Meridian," U.S. Department of Commerce, National Oceanic and Atmospheric Administration, August 1982.

685. Hydrometeorological Report No. 51, "Probable Maximum Precipitation Estimates, United States East of the 105th Meridian," U.S. Department of Commerce, National Oceanic and Atmospheric Administration, June 1978.

686. Hydrometeorological Report No. 33, "Seasonal Variation of the Probable Maximum Precipitation East of the 105th Meridian for Areas from 10 to 1,000 Square Miles and Durations of 6, 12, 24 and 48 Hours," U.S. Department of Commerce, April 1956.

687. Regulatory Guide 1.59, "Design Basis Floods for Nuclear Power Plants," U.S. Nuclear Regulatory Commission, (Rev. 2) August 1977. [7907100225]

688. Regulatory Guide 1.102, "Flood Protection for Nuclear Power Plants," U.S. Nuclear Regulatory Commission, (Rev. 1) September 1976. [7907100372]

689. Memorandum for V. Stello from H. Denton, "Potential Generic Requirement Concerning Design for Probable Maximum Precipitation," June 25, 1984. [8407100105]

690. Memorandum for V. Stello from H. Denton, "Generic Requirements Regarding Design for Probable Maximum Precipitation," October 10, 1984. [8503140522, 8410190029]

691. Memorandum for H. Denton from V. Stello, "Generic Requirements Regarding Design for Probable Maximum Precipitation," August 8, 1984. [8408160442]

692. Memorandum for T. Speis from H. Denton, "Generic Issue A-41; 'Long Term Seismic Program,'" October 10, 1984. [9705200066]

693. Memorandum for H. Denton from R. Bernero, "Resolution of Generic Issue No. 22, Inadvertent Boron Dilution Events (BDES)," September 17, 1984. [8410020424]

694. Memorandum for T. Speis from H. Denton, "Closeout of Generic Issue No. 22, 'Inadvertent Boron Dilution Events (BDE),'" October 15, 1984. [8410310592]

695. Memorandum for T. Speis from H. Denton, "Closeout of Generic Issue 50, 'Reactor Vessel Level Instrumentation in BWRs,'" October 17, 1984. [8411030745]

696. NRC Letter to All Boiling Water Reactor (BWR) Licensees of Operating Reactors (Except LaCrosse, Big Rock Point, Humboldt Bay and Dresden-1), "Reactor Vessel Water Level Instrumentation in BWRs (Generic Letter No. 84-23," October 26, 1984. [8410290050]

697. Memorandum for D. Eisenhut from R. Bernero, "Resolution of Generic Issue 50, Reactor Vessel Level Instrumentation in BWRs," September 6, 1984. [8410010093]

698. NUREG-0927, "Evaluation of Water Hammer Occurrence in Nuclear Power Plants," U.S. Nuclear Regulatory Commission, (Rev. 1) March 1984.

699. NUREG-0609, "Asymmetric Blowdown Loads on PWR Primary Systems," U.S. Nuclear Regulatory Commission, January 1981.

700. NRC Letter to All Operating PWR Licenses, Construction Permit Holders, and Applicants for Construction Permits, "Safety Evaluation of Westinghouse Topical Reports Dealing with Elimination of Postulated Pipe Breaks in PWR Primary Main Loops (Generic Letter 84-04)," February 1, 1984. [8402010410]

701. NUREG-0408, "Mark I Containment Short-Term Program Safety Evaluation Report," U.S. Nuclear Regulatory Commission, December 1977.

702. NUREG-0661, "Mark I Containment Long Term Program Safety Evaluation Report, Resolution of Generic Technical Activity A-7," U.S. Nuclear Regulatory Commission, July 1980, (Supplement 1) August 1982.

703. NUREG-0808, "Mark II Containment Program Evaluation and Acceptance Criteria," U.S. Nuclear Regulatory Commission, August 1981.

704. NUREG-0460, "Anticipated Transients Without Scram for Light Water Reactors," U.S. Nuclear Regulatory Commission, (Vol. 1) April 1978, (Vol. 2) April 1978, (Vol. 3) December 1978, (Vol. 4) March 1980.

705. Memorandum for C. Thomas from O. Parr, "CRD Accumulators - Proposed Improved Technical Specification," August 13, 1984. [8408270516]

706. NUREG-0123, "Standard Technical Specifications for General Electric Boiling Water Reactors (BWR/5)," U.S. Nuclear Regulatory Commission, (Rev. 3) December 1980.

707. Memorandum for H. Denton, et. al., from C. Michelson, "Survey of Valve Operator-Related Events Occurring During 1978, 1979, and 1980," December 23, 1981. [8202040039]

708. Memorandum for C. Michelson from H. Denton, "NRR Comments on AEOD Draft Report: Survey of Valve Operator-Related Events Occurring During 1978, 1979 and 1980," March 5, 1982. [8203240048]

709. AEOD/C203, "Survey of Valve Operator-Related Events Occurring During 1978, 1979, and 1980," Office for Analysis and Evaluation of Operational Data, U.S. Nuclear Regulatory Commission, May 1982. [8206180032]

710. Memorandum for C. Michelson from E. Brown and F. Ashe, "AEOD Assessment of Program Office Responses to the Report AEOD/C203, 'Survey of Valve Operator-Related Events Occurring During 1978, 1979, and 1980,'" December 23, 1982. [8301250189, 8301120496]

711. Memorandum for H. Denton from C. Michelson, "AEOD Assessment of Program Office Responses to AEOD Case Study (C-203), 'Survey of Valve Operator Related Events Occurring During 1978, 1979, and 1980,'" January 12, 1983. [8301250183]

712. Memorandum for C. Michelson from H. Denton, "AEOD Assessment of Program Office Responses to AEOD Case Study (C203), 'Survey of Valve Operator Related Events Occurring During 1978, 1979, and 1980,'" February 23, 1983. [8303100567]

713. Memorandum for K. Seyfrit from E. Brown and F. Ashe, "Engineering Evaluation Report AEOD/E305 Inoperable Motor Operated Valve Assemblies Due to Premature Degradation of Motors and/or Improper Limit Switch/Torque Switch Adjustment," April 13, 1983. [8305050353]

714. Memorandum for W. Minners from R. Bosnak, "Status of Potential Generic Issue 54, 'Valve Operator Related Events Occurring During 1978, 1979, and 1980,'" March 26, 1984. [8404110417]

715. Memorandum for R. Vollmer from R. Bosnak, "MEB Task Action Plan for Resolution of Generic Issue II.E.6.1, 'In Situ Testing of Valves,'" July 30, 1984. [8408070139]

716. Memorandum for D. Eisenhut from D. Muller, "PWR Reactor Cavity Uncontrolled Exposures, Generic Letter Implementing a Generic Technical Specification," July 12, 1984. [8407230356]

717. Memorandum for A. Thadani from W. Minners, "CRAC2 Computer Runs in Support of USI A-43," February 1, 1983. [8302090275]

718. Memorandum for W. Minners from F. Congel, "Prioritization of Generic Issue 97: PWR Reactor Cavity Uncontrolled Exposures," February 8, 1985. [8502250136]

719. Memorandum for H. Denton from R. Bernero, "PWR Reactor Cavity Uncontrolled Exposures," November 28, 1984. [8412180620]

720. Memorandum for T. Speis from R. Bernero, "Request for Prioritization of Generic Safety Issue - Break Plus Single Failure in BWR Water Level Instrumentation," October 10, 1984. [8410290282]

721. Memorandum for H. Denton and V. Stello from C. Michelson, "Case Study Report - Safety Concern Associated with Reactor Vessel Instrumentation in Boiling Water Reactors," September 2, 1981. [8109220940]

722. Memorandum for B. Sheron from A. Thadani, "Reactor Vessel Level Instrumentation in BWR's (Generic Issue 50)," August 2, 1984. [8408090089]

723. Memorandum for H. Denton from T. Speis, "Reactor Vessel Level Instrumentation in BWRs (Generic Issue 50)," August 2, 1984. [8408090386, 8408090094]

724. Memorandum for W. Dircks, et al., from S. Chilk, "Staff Requirements - Affirmation/Discussion and Vote, 11:30 a.m., Friday, June 1, 1984, Commissioners' Conference Room, D.C. Office (Open to Public Attendance)," June 1, 1984.

725. Federal Register Notice 49 FR 26036, "10 CFR Part 50, Reduction of Risk from Anticipated Transients Without Scram (ATWS) Events for Light-Water-Cooled Nuclear Power Plants," June 26, 1984.

726. NEDO-21506, "Stability and Dynamic Performance of the General Electric Boiling Water Reactor," General Electric Company, January 1977.

727. Memorandum for D. Crutchfield from L. Rubenstein, "Staff Evaluation of GE Topical Report NEDE-24011 (GESTAR) Amendment 8," April 17, 1985. [8504290470]

728. XN-NF-691(P)(A) & Supplement 1, "Stability Evaluation of Boiling Water Reactor Cores Sensitivity Analyses & Benchmark Analysis," Exxon Nuclear Company, Inc., August 22, 1984.

729. Memorandum for D. Eisenhut from R. Mattson, "Board Notification - BWR Core Thermal Hydraulic Stability," February 27, 1984. [8403020299]

730. Memorandum for T. Novak from L. Rubenstein, "Susquehanna 1 and 2 - Thermal Hydraulic Stability Technical Specification Change (TACS 55021 and 55022)," July 11, 1984. [8407170149]

731. Memorandum for G. Lainas from L. Rubenstein, "SER Input for Peach Bottom-3 Technical Specification Changes for Cycle 6 Operation with Increased Core Flows and Decreased Feedwater Temperatures (TACS #55123)," October 23, 1984. [8411010312]

732. NEDO-21078, "Test Results Employed by GE for BWR Containment and Vertical Vent Loads," General Electric Company, October 1975.

733. NUREG-0487, "Mark II Containment Lead Plant Program Load Evaluation and Acceptance Criteria," U.S. Nuclear Regulatory Commission, November 1978, (Supplement 1) September 1980.

734. NUREG-0783, "Suppression Pool Temperature Limits for BWR Containments," U.S. Nuclear Regulatory Commission, November 1981.

735. Letter to T. Novak (NRC) from T. Pickens (BWR Owners' Group), "Agreements from BWROG/NRC Meeting on Suppression Pool Temperature Limit," October 16, 1984. [8410220072]

736. Memorandum for T. Speis from R. Bernero, "Proposed Generic Issue 'BWR Suppression Pool Temperature Limits,'" November 21, 1984. [8412030526]

737. Memorandum for W. Minners from W. Butler, "Comments on Prioritization of Generic Issue 108, 'BWR Suppression Pool Temperature Limits,'" January 10, 1985. [8501160095]

738. NUREG-1044, "Evaluation of the Need for a Rapid Depressurization Capability for CE Plant," U.S. Nuclear Regulatory Commission, December 1984.

739. SECY-84-134, "Power Operated Relief Valves for Combustion Engineering Plants," March 23, 1984. [8404180339]

740. "Draft Maintenance Program Plan," U.S. Nuclear Regulatory Commission, May 8, 1984.

741. NUREG/CR-3543, "Survey of Operating Experience from LERs to Identify Aging Trend," U.S. Nuclear Regulatory Commission, January 1984.

742. NUREG-0619, "BWR Feedwater Nozzle and Control Rod Drive Return Line Nozzle Cracking," U.S. Nuclear Regulatory Commission, November 1980.

743. NUREG-0744, "Resolution of the Task A-11 Reactor Vessel Materials Toughness Safety Issue," U.S. Nuclear Regulatory Commission, (Rev. 1) October 1982.

744. NRC Letter to All Power Reactor Licensees (Except Ft. St. Vrain), "NUREG-0744 Rev. 1; Generic Letter No. 82-26) - Pressure Vessel Material Fracture Toughness," November 12, 1982. [8211160047]

745. EPRI NP-3967, "Classification and Analysis of Reactor Operating Experience Involving Dependent Events," Electric Power Research Institute, June 1985.

746. NUREG-0224, "Final Report on Reactor Vessel Pressure Transient Protection for Pressurized Water Reactors," U.S. Nuclear Regulatory Commission, September 1978.

747. NUREG-0612, "Control of Heavy Loads at Nuclear Power Plants Resolution of Generic Technical Activity A-36," U.S. Nuclear Regulatory Commission, July 1980.

748. NUREG-0763, "Guidelines for Confirmatory Inplant Tests of Safety Relief Valve Discharges for BWR Plants," U.S. Nuclear Regulatory Commission, May 1981.

749. NUREG-0802, "Safety/Relief Valve Quencher Loads: Evaluation for BWR Mark II and III Containments," U.S. Nuclear Regulatory Commission, October 1982.

750. NUREG-0313, "Technical Report on Material Selection and Processing Guidelines for BWR Coolant Pressure Boundary Piping," U.S. Nuclear Regulatory Commission, July 1977, (Rev. 1) July 1980, (Rev. 2) January 1988.

751. WASH-1270, "Anticipated Transients Without Scram for Water-Cooled Reactors," U.S. Atomic Energy Commission, September 1973.

752. Memorandum for S. Hanauer from D. Eisenhut, "Value/Impact Assessment of Proposed Steam Generator Generic Requirements," October 12, 1982. [8211110465]

753. SECY-84-13, "NRC Integrated Program for the Resolution of Steam Generator USI's," January 11, 1984. [8401310036]

754. NUREG-0916, "Safety Evaluation Report Related to Restart of R.E. Ginna Nuclear Power Plant," U.S. Nuclear Regulatory Commission, May 1982.

755. NUREG-0651, "Evaluation of Steam Generator Tube Rupture Events," U.S. Nuclear Regulatory Commission, March 1980.

756. Memorandum for D. Eisenhut from T. Speis, "Prioritization of Staff Actions Concerning S.G. Tube Degradation and Rupture Events," February 23, 1983. [8303090047]

757. SECY-84-13A, "NRC Integrated Program for the Resolution of Steam Generator USIs," September 7, 1984. [8409140060]

758. SECY-84-13B, "NRC Integrated Program for the Resolution of Steam Generator USI's - Response to Commissioner Comments (Memo from Chilk to Dircks dated September 13, 1984)," November 5, 1984. [8411210357]

759. AEOD/C005, "AEOD Observations and Recommendations Concerning the Problem of Steam Generator Overfill and Combined Primary and Secondary Blowdown," Office for Analysis and Evaluation of Operational Data, U.S. Nuclear Regulatory Commission, December 17, 1980. [8101150366]

760. NUREG/CR-2883, "Study of the Value and Impact of Alternative Decay Heat Removal Concepts for Light Water Reactors," U.S. Nuclear Regulatory Commission, (Vol. 1) June 1983, (Vol. 2) June 1983, (Vol. 3) June 1983.

761. AEOD/E414, "Stuck Open Isolation Check Valve on the Residual Heat Removal System at Hatch Unit 2," Office for Analysis and Evaluation of Operational Data, U.S. Nuclear Regulatory Commission, May 31, 1984. [8406190101]

762. Memorandum for W. Minners from G. Holahan, "Prioritization of Interfacing System LOCA at Boiling Water Reactors," October 25, 1984. [8411050292]

763. NUREG-0677, "The Probability of Intersystem LOCA: Impact Due to Leak Testing and Operational Changes," U.S. Nuclear Regulatory Commission, May 1980.

764. SECY-85-129, "Maintenance and Surveillance Program Plan," April 12, 1985. [8509190696]

765. SECY-85-62, "NRC Integrated Program for the Resolution of Steam Generator USI's - Response to Commissioner Comments (Memo from Chilk to Dircks Dated January 23, 1985)," February 22, 1985. [8504080388]

766. Memorandum for W. Dircks from S. Chilk, "SECY-85-62 - NRC Integrated Program for the Resolution of Steam Generator USIs - Response to Commissioners Comments (Memo from Chilk and Dircks Dated January 23, 1985)," March 15, 1985.

767. Memorandum for W. Dircks from H. Denton, "Final Rule - Applicability of License Conditions and Technical Specifications in an Emergency," February 17, 1983. [8303300333]

768. Memorandum for T. Speis from H. Denton, "Formation of a Technical Specification Improvement Project Group," December 31, 1984. [8501150417]

769. Memorandum for V. Stello from H. Denton, "Close Out Generic Issue #B-19 -Thermal-Hydraulic Stability," May 21, 1985. [8506040556]

770. Letter from P. Crane (Pacific Gas and Electric Company) to Director, Division of Licensing, U.S. Nuclear Regulatory Commission, "Report on June 7, 1975 Ferndale Earthquake," August 4, 1975. [8602070315, 993280104, ML993280111]

771. Memorandum for W. Minners from L. Reiter, "Generic Issue No. B-50 Post Operating Basis Earthquake Inspection," June 7, 1985.

772. Letter to A. Schwencer (NRC) from C. Dunn (Duquesne Light Company), "Beaver Valley Power Station, Unit No. 1, Docket No. 50-334, Request for Amendment to the Operating License - No. 35," October 27, 1978. [7811030107]

773. Letter to J. Carey (Duquesne Light Company) from S. Varga (NRC), "Beaver Valley Unit No. 1 - Operation With Two Out of Three Reactor Coolant Loops - Safety Evaluation," July 20, 1984. [8408010218]

774. Memorandum for D. Eisenhut from D. Wigginton, Closeout of MPA E-05; Westinghouse N-1 Loop Operation," January 11, 1985. [8501300565]

775. Memorandum for R. Emrit from A. Murphy, "Generic Issue Management Control System, Issue No. 119.3, Decouple OBE from SSE," February 21, 1992. [9803260147]

776. Memorandum for R. Bernero from D. Eisenhut, "BWR Thermal-Hydraulic Stability Technical Specifications," November 16, 1984. [8411290326]

777. Memorandum for W. Dircks from H. Denton, "Closeout of TMI Action Plan Items I.A.2.2 and I.A.2.7 Training and Qualifications of Operating Personnel," June 24, 1985. [8507020587]

778. Memorandum for W. Dircks from H. Denton, "TMI Action Item I.A.3.4," February 12, 1985. [8502260084]

779. Memorandum for W. Dircks from J. Taylor, "TMI Action Plan - Completed Item," June 26, 1985. [8507080034]

780. IE Information Notice No. 83-58, "Transamerica DeLaval Diesel Generator Crankshaft Failure," U.S. Nuclear Regulatory Commission, August 30, 1983. [8308040044]

781. IE Information Notice No. 83-51, "Diesel Generator Events," U.S. Nuclear Regulatory Commission, August 5, 1983. [8306270425]

782. Memorandum for C. Berlinger from H. Denton, "Detail Assignment to DOL, Transamerica DeLaval Emergency Diesel Generator Project Group (TDI Project Group)," January 25, 1984. [8505130221]

783. SECY-84-34, "Emergency Diesel Generators Manufactured by Transamerica DeLaval, Inc.," January 25, 1984. [8403010451]

784. Letter to D. Bixby (TDI) from D. Eisenhut (NRC), February 14, 1984. [8402290333]

785. TDI Diesel Generators Owners' Group Program Plan, March 2, 1984.

786. SECY-84-155, "Section 208 Report to the Congress on Abnormal Occurrences for October-December, 1983," April 11, 1984. [8405140043]

787. Letter to J. George (Transamerica Delaval, Inc., Owners' Group) from D. Eisenhut (NRC), "Safety Evaluation Report, Transamerica Delaval, Inc. Diesel Generator Owners' Group Program Plan," August 13, 1984. [8408240115]

788. Memorandum for W. Minners from B. Sheron, "Additional Low-Temperature-Overpressure Protection Issues for Light-Water Reactors," August 1, 1984. [8408130012]

789. IE Information Notice No. 83-26, "Failure of Safety/Relief Valve Discharge Line Vacuum Breakers," U.S. Nuclear Regulatory Commission, May 3, 1983. [8303040028]

790. NUREG/CR-3384, "VISA - A Computer Code for Predicting the Probability of Reactor Pressure Vessel Failure," U.S. Nuclear Regulatory Commission, September 1983.

791. Memorandum for K. Seyfrit from C. Hsu, "EE No. AEOD/E322 Damage to Vacuum Breaker Valves as a Result of Relief Valve Lifting," September 21, 1983. [8310060353]

792. AEOD/C401, "Low Temperature Overpressure Events at Turkey Point Unit 4," Office for Analysis and Evaluation of Operational Data, U.S. Nuclear Regulatory Commission, March 1984. [8404050445]

793. Memorandum for B. Sheron from B. Liaw, "Additional Low-Temperature-Overpressure Protection (LTOP) Issues for Light-Water Reactors," August 30, 1984. [8409130397]

794. Memorandum for K. Seyfrit from E. Imbro, 'Single Failure Vulnerability of Power Operated Relief Valve Actuation Circuitry for Low Temperature Overpressure Protection (LTOP)," October 24, 1984. [8411070245]

795. AEOD/C403, "Edwin I. Hatch Unit No. 2 Plant Systems Interaction Event on August 25, 1982," Office for Analysis and Evaluation of Operational Data, U.S. Nuclear Regulatory Commission, May 1984. [8405300746]

796. Memorandum for R. Mattson from T. Dunning, "RHR Interlocks for Westinghouse Plants," April 17, 1984. [8404300085]

797. Memorandum for F. Rowsome from W. Houston, "RCS/RHR Suction Line Valve Interlock on PWRs," August 27, 1984. [8409070331]

798. NSAC-52, "Residual Heat Removal Experience Review and Safety Analysis, Pressurized Water Reactor," Nuclear Safety Analysis Center, January 1983.

799. Memorandum for W. Dircks from H. Denton, "Resolution of Generic Issue III.D.2.3 -- Liquid Pathway Studies," August 28, 1985. [8509050212]

800. NUREG/CR-4258, "An Approach to Team Skills Training of Nuclear Power Plant Control Room Crews," U.S. Nuclear Regulatory Commission, July 1985.

801. Memorandum for W. Dircks from H. Denton, "Team Training for Nuclear Power Plant Control Room Crews," July 10, 1985. [8507220495]

802. NUREG/CR-3739, "The Operator Feedback Workshop: A Technique for Obtaining Feedback from Operations Personnel," U.S. Nuclear Regulatory Commission, September 1984.

803. NUREG/CR-4139, "The Mailed Survey: A Technique for Obtaining Feedback from Operations Personnel," U.S. Nuclear Regulatory Commission, May 1985.

804. Memorandum for W. Dircks from H. Denton, "TMI Action Plan Item I.A.2.6(4)," September 25, 1985. [8510030079]

805. Memorandum for T. Combs from H. Denton, "Revised SRP Section 13.5.2 and Appendix A to SRP Section 13.5.2 of NUREG-0800," July 17, 1985. [8508050283]

806. Memorandum for W. Dircks from H. Denton, "Closeout of TMI Action Plan, Task II.B.6, 'Risk Reduction for Operating Reactors at Sites With High Population Densities,'" September 25, 1985. [8510030342]

807. Memorandum for W. Dircks from R. Minogue, "Closeout of TMI Action Plan Task II.B.8 'Rulemaking Proceeding on Degraded Core Accidents - Hydrogen Control,'" July 19, 1985. [8508010066]

808. Memorandum for W. Dircks from H. Denton, "Close Out of TMI Action Plan, Task II.B.8," August 12, 1985. [8508210316]

809. NUREG-1070, "NRC Policy on Future Reactor Designs," U.S. Nuclear Regulatory Commission, July 1985.

810. NUREG/CR-3085, "Interim Reliability Evaluation Program: Analysis of the Millstone Point Unit 1 Nuclear Power Plant," U.S. Nuclear Regulatory Commission, (Vol. 1) April 1983, (Vol. 2) August 1983, (Vol. 3) July 1983, (Vol. 4) July 1983.

811. NUREG/CR-3511, "Interim Reliability Evaluation Program: Analysis of the Calvert Cliffs Unit 1 Nuclear Power Plant," U.S. Nuclear Regulatory Commission, (Vol. 1) May 1984, (Vol. 2) October 1984.

812. NUREG/CR-2728, "Interim Reliability Evaluation Program Procedures Guide," U.S. Nuclear Regulatory Commission, March 1983.

813. Memorandum for W. Dircks from R. Minogue, "Closeout of TMI Action Plan, Task II.C.1, 'Interim Reliability Evaluation Program,'" July 9, 1985. [8507180593]

814. SECY-84-133, "Integrated Safety Assessment Program (ISAP)," March 23, 1984. [8404100072]

815. SECY-85-160, "Integrated Safety Assessment Program - Implementation Plan," May 6, 1985. [8505230571]

816. Memorandum for W. Dircks from H. Denton, "Close-out of Generic Issues II.C.2, 'Continuation of IREP,' and IV.E.5, 'Assess Currently Operating Reactors,'" September 25, 1985. [9909290069]

817. Memorandum for W. Dircks from R. Minogue, "Closeout of TMI Action Plan Task II.E.2.2, 'Research on Small Break LOCA's and Anomalous Transients,'" July 25, 1985. [9909290072]

818. Memorandum for W. Dircks from J. Taylor, "TMI Action Plan - Completed Item," August 15, 1985. [8508200726]

819. EPRI EL-3209, "Workshop Proceedings: Retaining Rings for Electric Generators," Electric Power Research Institute, August 1983.

820. Memorandum for R. Fraley from R. Vollmer, "Proposed NRR Revisions to Review Procedures for Turbine Missile Issue," May 12, 1983. [8305250286]

821. Memorandum for W. Johnson from T. Novak, "Midland SSER #3 - Turbine Missile Review," November 1, 1983. [8311140470]

822. Memorandum for V. Stello from H. Denton, "NRR Plans for Approval of WCAP-10271," January 11, 1985. [8501220433, 8501220440]

823. Letter to J. Sheppard (Westinghouse Owners Group) from C. Thomas (NRC), "Acceptance for Referencing of Licensing Topical Report WCAP-10271, 'Evaluation of Surveillance Frequencies and Out of Service Times for the Reactor Protection Instrumentation Systems,'" February 21, 1985. [8503010427]

824. Memorandum for T. Speis from R. Mattson, "Request for Prioritization of Generic Safety Issue - Failure of HPCI Steam Line Without Isolation," October 18, 1983. [8311020209]

825. Memorandum for K. Seyfrit from P. Lam, "Failure of an Isolation Valve of the Reactor Core Isolation Cooling System to Open Against Operating Reactor Pressure," August 23, 1984. [8411010554, 8411010453]

826. Letter to A. Schwencer (NRC) from J. Kemper (Philadelphia Electric Company), "Limerick Generating Station, Units 1 & 2, Request for Additional Information from NRC Equipment Qualification Branch (EQB)," February 27, 1984. [9909290076]

827. NEDO-24708A, "Additional Information Required for NRC Staff Generic Report on Boiling Water Reactors," General Electric Company, August 1979 [7909130302, 7909130304], December 1980.

828. NUREG/CR-3933, "Risk Related Reliability Requirements for BWR Safety-Important Systems with Emphasis on the Residual Heat Removal System," U.S. Nuclear Regulatory Commission, August 1984.

829. "An Evaluation of Unisolated LOCA Outside the Drywell in the Shoreham Nuclear Power Station," Brookhaven National Laboratory, June 1985. [9909290080]

830. Memorandum for W. Minners from A. Thadani, "Comments on Generic Issue No. 87 - Failure of HPCI Steam Line Without Isolation," June 28, 1985. [8507170422]

831. NUREG/CR-1433, "Examination of the Use of Potassium Iodide (KI) as an Emergency Protective Measure for Nuclear Reactor Accidents," U.S. Nuclear Regulatory Commission, October 1980.

832. SECY-83-362, "Emergency Planning - Predistribution/Stockpiling of Potassium Iodide for the General Public," August 30, 1983. [8309080120]

833. SECY-85-167, "Federal Policy Statement on the Distribution and Use of Potassium Iodide," May 13, 1985. [8505310621]

834. Memorandum for H. Denton and R. Minogue from W. Dircks, "Review of NRC Requirements for Nuclear Power Plant Piping," August 1, 1983. [8308300212]

835. Memorandum for W. Dircks from R. Minogue, "Plan to Implement Piping Review Committee Recommendations," July 30, 1985. [9705050005]

836. Memorandum for T. Murley, et al., from J. Taylor, "Results of Regional Survey of Plant Specific Information Relating to the Potential for Uncontrolled Radiation Exposures in PWR Reactor Cavities," June 18, 1985. [8506250113]

837. Note to R. Vollmer from T. Speis, "Proposed Request to Perform Research on the Stress Corrosion Cracking of Pressure Boundary Ferritic Steels in Selected Environments," January 7, 1985. [9909290082]

838. NUREG-1165, "Environmental Standard Review Plan for ES Section 7.1.1," U.S. Nuclear Regulatory Commission, November 1985.

839. Letter to J. Bayne (PASNY) from S. Varga (NRC), "Steam Generator Tube and Girth Weld Repairs at the Indian Point Nuclear Generating Plant, Unit No. 3 (IP-3)," May 27, 1983. [8306150627]

840. "Value-Impact Analysis of Recommendations Concerning Steam Generator Tube Degradations and Rupture Events," Science Applications, Inc., February 2, 1983.

841. Regulatory Guide 1.99, "Effects of Residual Elements on Predicted Radiation Damage to Reactor Vessel Materials," U.S. Nuclear Regulatory Commission, July 1975, (Rev. 1) April 1977 [7907100362], (Rev. 2) May 1988 [8907270187].

842. IE Information Notice No. 82-37, "Cracking in the Upper Shell to Transition Cone Girth Weld of a Steam Generator at an Operating Pressurized Water Reactor," U.S. Nuclear Regulatory Commission, September 16, 1982. [8208190220]

843. Letter to D. Smith (NRC) from E. Rahe (Westinghouse), January 17, 1982. [9909290085]

844. NUREG/CR-3281, "Investigation of Shell Cracking on the Steam Generators at Indian Point Unit No. 3," U.S. Nuclear Regulatory Commission, June 1983.

845. NUREG/CR-3614, "Constant Extension Rate Testing of SA302 Grade B Material in Neutral and Chloride Solutions," U.S. Nuclear Regulatory Commission, February 1984.

846. Letter to W. Hazelton (NRC) from H. Watanabe (GE), "'Laboratory Examination of Garigliano Secondary Steam Generator-B Core Samples,' NEDE-25162, July 1979," December 13, 1979. [7912130566]

847. EPRI NP-1136, "Limiting Factor Analysis of High Availability Nuclear Plants (Boiling Water Reactors)," Electric Power Research Institute, (Vol. 1) August 1979.

848. Regulatory Guide 1.56, "Maintenance of Water Purity in Boiling Water Reactors," U.S. Nuclear Regulatory Commission, (Rev. 1) July 1978.

849. NUREG/CR-3842, "Steam Generator Group Project Task 8 - Selective Tube Unplugging," U.S. Nuclear Regulator Commission, July 1984.

850. NRC Letter to All PWR Licensees of Operating Reactors, Applicants for Operating Licenses, and Holders of Construction Permits, and Ft. St. Vrain, "Staff Recommended Actions Stemming from NRC Integrated Program for the Resolution of Unresolved Safety Issues Regarding Steam Generator Tube Integrity (Generic Letter 85-02)," April 17, 1985. [8504120031]

851. NUREG/CP-0058, "Twelfth Water Reactor Safety Research Information Meeting," U.S. Nuclear Regulatory Commission, (Vol. 4) January 1985.

852. NUREG/CP-0044, "Proceedings of the International Atomic Energy Agency Specialists' Meeting on Subcritical Crack Growth," U.S. Nuclear Regulatory Commission, (Vol. 1) May 1983, (Vol. 2) May 1983.

853. "Corrosion Fatigue Crack Growth in Reactor Pressure Vessel Steels - Structural Integrity of Light Water Reactor Components," Scott, P. et al., Elsevier Science Publishing Co., Inc., 1982.

854. NUREG/CR-4121, "The Effects of Sulfur Chemistry and Flow Rate on Fatigue Crack Growth Rates in LWR Environments," U.S. Nuclear Regulatory Commission, February 1985.

855. NUREG-0975, "Compilation of Contract Research for the Materials Engineering Branch, Division of Engineering Technology," U.S. Nuclear Regulatory Commission, (Vol. 2) March 1984.

856. PNO-II-85-41, "Small Steam Generator Surface Cracks," U.S. Nuclear Regulatory Commission, April 23, 1985. [8504290412]

857. Memorandum for W. Minners from B. Liaw, "Prioritization of Generic Issue No. (111) Stress Corrosion Cracking of RCPB Ferritic Steels and Steam Generator Vessels," June 7, 1985. [8506170320]

858. IE Information Notice No. 85-65, "Crack Growth in Steam Generator Girth Welds," U.S. Nuclear Regulatory Commission, July 31, 1985. [8507290456]

859. Memorandum for H. Thompson from J. Knight, "Steam Generator Shell Transition Joint Cracking," July 10, 1985. [8507190409]

860. NUREG-0937, "Evaluation of PWR Response to Main Steamline Break With Concurrent Steam Generator Tube Rupture and Small-Break LOCA," U.S. Nuclear Regulatory Commission, December 1982. [8412190335]

861. SECY-83-357B, "Status of Hydrogen Control Issue and Rulemaking Recommendations in SECY-83-357A," December 3, 1984. [8412190335]

862. IE Bulletin No. 79-13, "Cracking in Feedwater System Piping," June 25, 1979 [7906250348], (Rev. 1) August 29, 1979 [7908220101], (Rev. 2) October 17, 1979 [7908220135].

863. Memorandum for T. Speis from H. Denton, "Closeout of Generic Issues B-58 and C-11," July 9, 1985. [8507180530]

864. AEOD/C301, "Failures of Class 1E Safety-Related Switchgear Circuit Breakers to Close on Demand," Office for Analysis and Evaluation of Operational Data, U.S. Nuclear Regulatory Commission, April 1983. [8305230531]

865. Memorandum for T. Speis from H. Denton, "Resolution of Generic Issue 14, 'PWR Pipe Cracks,'" October 4, 1985. [9909290092]

866. Federal Register Notice 47 FR 7023, "Proposed Policy Statement on Safety Goals for Nuclear Power Plants," February 17, 1982.

867. Federal Register Notice 48 FR 10772, "Safety Goal Development Program," March 14, 1983.

868. Letter to J. Ahearne from M. Plesset, "Recommendations of President's Commission on ACRS Role," January 15, 1980. [8002150071]

869. Federal Register Notice 46 FR 22358, "10 CFR Part 2, ACRS Participation in NRC Rulemaking," April 17, 1981.

870. Memorandum for Commissioner Ahearne, et al., from L. Bickwit, et al., "TMI Action Plan, Chapter V, Formal Procedures for Ensuring Periodic Public Interaction," October 2, 1980.

871. Memorandum for W. Dircks, et al., from J. Hoyle, "Staff Requirements - Discussion of Action Plan, Chapter V (See SECY-80-230B), 2:00 p.m. Monday, July 7, 1980, Commissioners' Conference Room, D.C. Office (Open to Public Attendance)," July 9, 1980. [8012030928]

872. Federal Register Notice 45 FR 49535, "10 CFR Part 2, Procedural Assistance in Adjudicatory Licensing Proceedings," July 25, 1980.

873. Federal Register Notice 46 FR 13681, "10 CFR Part 2, Domestic Licensing Proceedings; Procedural Assistance Program," February 24, 1981.

874. Memorandum for L. Bickwit from S. Chilk, "SECY-81-391 - Provision of Free Transcripts to All Full Participants in Adjudicatory Proceedings: May 11, 1981 Comptroller General Decision," February 25, 1982.

875. Federal Register Notice 45 FR 34279, "10 CFR Parts 2, 50, Possible Amendments to 'Immediate Effectiveness Rule,'" May 22, 1980.

876. Federal Register Notice 47 FR 47260, "10 CFR Part 2, Commission Review Procedures for Power Reactor Construction Permits; Immediate Effectiveness Rule," October 25, 1982.

877. Federal Register Notice 51 FR 10393, "10 CFR Parts 0 and 2, Revision of Ex Parte and Separation of Functions Rules Applicable to Formal Adjudicatory Proceedings," March 26, 1986.

878. NUREG-0632, "NRC Views and Analysis of the Recommendations of the President's Commission on the Accident at Three Mile Island," U.S. Nuclear Regulatory Commission, November 1979.

879. Federal Register Notice 46 FR 28533, "Statement of Policy on Conduct of Licensing Proceedings," May 27, 1981.

880. Memorandum to All Employees from N. Palladino, "Regulatory Reform Task Force," November 17, 1981.

881. Letter to the Honorable Thomas P. O'Neill, Jr. from N. Palladino, February 21, 1983.

882. Federal Register Notice 48 FR 44173, "10 CFR Part 50, Revision of Backfitting Process for Power Reactors," September 28, 1983.

883. Federal Register Notice 48 FR 44217, "10 CFR Part 50, Revision of Backfitting Process for Power Reactors," September 28, 1983.

884. Federal Register Notice 50 FR 38097, "10 CFR Parts 2 and 50, Revision of Backfitting Process for Power Reactors," September 20, 1985.

885. Memorandum for H. Thompson from D. Crutchfield, "Potential Immediate Generic Actions as a Result of the Davis-Besse Event of June 9, 1985," August 5, 1985. [8508090679]

886. NUREG-1154, "Loss of Main and Auxiliary Feedwater Event at the Davis-Besse Plant on June 9, 1985," U.S. Nuclear Regulatory Commission, July 1985.

887. Memorandum for T. Speis from H. Thompson, "Short Term Generic Actions as a Result of the Davis-Besse Event of June 9, 1985," August 19, 1985. [8508270246]

888. Memorandum for H. Denton from T. Speis, "Adequacy of the Auxiliary Feedwater System at Davis-Besse," July 23, 1985. [8508010086]

889. NSAC-60, "A Probabilistic Risk Assessment of Oconee Unit 3," Electric Power Research Institute, June 1984.

890. NUREG-1032, "Evaluation of Station Blackout Accidents at Nuclear Power Plants," U.S. Nuclear Regulatory Commission, June 1988.

891. Letter to T. Novak (NRC) from R. Crouse (Toledo Edison Company), December 31, 1981. [8201060607]

892. NUREG/CR-2770, "Common Cause Fault Rates for Valves," U.S. Nuclear Regulatory Commission, February 1983.

893. NUREG/CR-2098, "Common Cause Fault Rates for Pumps," U.S. Nuclear Regulatory Commission, February 1983.

894. Memorandum for O. Parr from A. Thadani, "Auxiliary Feedwater System - CRGR Package," November 9, 1984. [8411280233]

895. Memorandum for H. Denton, et al., from W. Dircks, "Staff Actions Resulting from the Investigation of the June 9 Davis-Besse Event (NUREG-1154)," August 5, 1985. [8508090534]

896. SECY-86-56, "Status of Staff Study to Determine if PORVs Should be Safety Grade," February 18, 1986. [8611100428]

897. Memorandum for G. Lainas from F. Rowsome, "Safety Evaluation of the CE Licensees' Responses to TMI Action Item II.K.3.2," August 26, 1983. [8309060394]

898. Memorandum for G. Lainas from F. Rowsome, "Safety Evaluation of the B&W Licensees' Responses to TMI Action Item II.K.3.2," August 24, 1983. [8308310422]

899. Memorandum for G. Lainas from F. Rowsome, "Safety Evaluation of the Westinghouse Licensees' Responses to TMI Action Item II.K.3.2," July 22, 1983. [8308040054]

900. Memorandum for H. Thompson from W. Russell, "Comments on Draft List of Longer Term Generic Actions as a Result of the Davis-Besse Event of June 9, 1985," September 19, 1985. [8509240326]

901. Memorandum for T. Combs from H. Denton, "Revised SRP Section 9.2.1 and SRP Section 9.2.2 of NUREG-0800," June 24, 1986. [8607080481]

902. Memorandum for J. Sniezek and R. Fraley from H. Denton, "Resolution of Generic Issue No. 36, 'Loss of Service Water,'" May 13, 1986. [8605300159]

903. Memorandum for T. Speis from H. Denton, "Resolution of Generic Issue 3, 'Setpoint Drift in Instrumentation,'" May 19, 1986. [8606110638]

904. SECY-83-293, "Amendments to 10 CFR 50 Related to Anticipated Transients Without Scram (ATWS) Events," July 9, 1983. [8308080642]

905. Memorandum for T. Speis from R. Bernero, "Enhancement of the Reliability of Westinghouse Solid State Protection System (SSPS)," April 5, 1985. [8504160610]

906. NUREG/CR-3971, "A Handbook for Cost Estimating," U.S. Nuclear Regulatory Commission, October 1984.

907. Memorandum for W. Minners from B. Sheron, "Generic Issues C-4, C-5, C-6," May 29, 1985. [8506100882]

908. SECY-83-472, "Emergency Core Cooling System Analysis Methods," November 17, 1983. [8401060169]

909. AEOD/C503, "Decay Heat Removal Problems at U.S. Pressurized Water Reactors," Office for Analysis and Evaluation of Operational Data, U.S. Nuclear Regulatory Commission, December 1985. [8601060316]

910. Memorandum for H. Denton from C. Heltemes, "Case Study Report - Decay Heat Removal Problems at U.S. Pressurized Water Reactors," December 23, 1985. [8601060315]

911. Memorandum for C. Heltemes from H. Denton, "AEOD's Report on Decay Heat Removal Problems at U.S. PWRs," February 10, 1986. [8602200004]

912. Memorandum to T. Murley, et al., from H. Denton, "Evaluation of Industry Success in Achieving ALARA-Integrated Radiation Protection Plans - Data Trend Assessments," May 19, 1986.

913. Memorandum for V. Stello from H. Denton, "Resolution of Generic Issue III.D.3.1, 'Radiation Protection Plans,'" May 19, 1986.

914. Memorandum for H. Thompson and T. Speis from R. Bernero, "Request for Comments on Draft CRGR Package with Requirements for Upgrading Auxiliary Feedwater Systems in Certain Operating Plants," October 3, 1985. [8510090228]

915. Memorandum for W. Minners from A. Thadani, "Seismic Induced Relay Chatter Issue," March 22, 1985.

916. Regulatory Guide 1.29, "Seismic Design Classification," U.S. Nuclear Regulatory Commission, June 1972, (Rev. 1) August 1973 [8003280778], (Rev. 2) February 1976, (Rev. 3) September 1978 [7810030052].

917. Regulatory Guide 1.100, "Seismic Qualification of Electrical Equipment for Nuclear Power Plants," U.S. Nuclear Regulatory Commission, March 1976, (Rev. 1) August 1977.

918. NUREG/CP-0070, "Proceeding of the Workshop on Seismic and Dynamic Fragility of Nuclear Power Plant Components," U.S. Nuclear Regulatory Commission, August 1985.

919. NUREG-1030, "Seismic Qualification of Equipment in Operating Nuclear Power Plants," U.S. Nuclear Regulatory Commission, February 1987.

920. ANSI/ANS 5.1, "Decay Heat Power in Light Water Reactors," American National Standards Institute, 1979.

921. Letter to the Honorable Morris K. Udall from Joseph M. Hendrie, August 7, 1978. [7901030172, 8001230259]

922. Letter to Joseph Hendrie from Morris K. Udall, January 27, 1978. [8007210279, 8007180431]

923. Memorandum for J. Taylor from D. Morrison, "Resolution of Generic Safety Issue 15, 'Radiation Effects on Reactor Vessel Supports,'" May 29, 1996. [9606190081]

924. SECY-96-107, "Uniform Tracking of Agency Generic Technical Issues," May 14, 1996. [9605230140]

925. Memorandum for E. Beckjord from T. Murley, "Regulatory Guide 1.44," April 30, 1992. [9205110015]

926. Memorandum for Record from E. McGregor, "SECY-80-366 - NRC Legislative Program for 97th Congress," April 8, 1981.

927. Memorandum for Chairman Palladino, et al., from A. Kenneke, "TMI Action Plan, Chapter V," May 18, 1984.

928. Memorandum for A. Thadani from T. Speis, "Generic Safety Issue (GSI)-166, 'Adequacy of Fatigue Life of Metal Components,'" August 26, 1996. [9808210022]

929. Regulatory Guide 1.139, "Guidance for Residual Heat Removal," U.S. Nuclear Regulatory Commission, May 1978.

930. NUREG-0957, "The Price-Anderson Act - The Third Decade," U.S. Nuclear Regulatory Commission, December 1983.

931. NUREG-0689, "Potential Impact of Licensee Default on Cleanup of TMI-2," U.S. Nuclear Regulatory Commission, November 1980.

932. SECY-83-64A, "10 CFR 140: Proposed Rule to Revise the Criteria for Determination of an Extraordinary Nuclear Occurrence," August 9, 1983. [8308250291]

933. Memorandum for A. Kenneke from W. Olmstead, "Chapter 5 of TMI Action Plan," March 16, 1984. [8404040211]

934. Letter to the Honorable Alan Simpson from Joseph Hendrie, March 24, 1981. [8104030556]

935. NUREG/CR-1368, "Development of a Checklist for Evaluating Maintenance, Test and Calibration Procedures Used in Nuclear Power Plants," U.S. Nuclear Regulatory Commission, May 1980.

936. NUREG/CR-1369, "Procedures Evaluation Checklist for Maintenance, Test and Calibration Procedures," U.S. Nuclear Regulatory Commission, May 1980.

937. Memorandum for Chairman Ahearne from W. Dircks, "Manual Chapters Delegation of Authority to Staff Office Directors," December 23, 1980.

938. SECY-80-497, "Review of Delegations of Authority and Other Documentation," November 10, 1980. [8011190612]

939. Federal Register Notice 51 FR 28044, "Safety Goals for the Operations of Nuclear Power Plants," August 4, 1986.

940. Memorandum for T. Speis from H. Thompson, "Longer-Term Generic Actions as a Result of the Davis-Besse Event of June 9, 1985," November 6, 1985. [8511120162]

941. Memorandum for B. Morris from D. Basdekas, "Concerns Related to the Davis-Besse Incident on June 9, 1985," August 13, 1985. [8508230349]

942. Memorandum for F. Gillespie from D. Basdekas, "Concerns Related to the Davis-Besse Incident on June 9, 1985," September 27, 1985. [9909290115]

943. Memorandum for A. DeAgazio from D. Crutchfield, "Davis-Besse Restart Safety Evaluation (TAC No. 59702)," December 17, 1985. [8512230373]

944. Letter to G. Ogeka (BNL) from T. Speis (NRC), "BNL Technical Assistance to the Division of Safety Review and Oversight, Office of Nuclear Reactor Regulation, NRC - 'Reduction of Risk Uncertainty' (FIN A-3846)," April 28, 1986. [9909290117]

945. Memorandum for K. Kniel from R. Riggs, "OTSG Thermal Stress (GI-125.II.4)," June 17, 1986. [8608070348]

946. Memorandum for H. Thompson from R. Bernero, "Auxiliary Feedwater Systems," August 23, 1985. [8509030040]

947. Memorandum for B. Boger from A. Gody, "Implementation of the Resolution for Generic Issue 142, 'Leakage Through Electrical Isolators,'" May 28, 1993. [9803260145]

948. Memorandum for H. Thompson from G. Edison, "Recommendation for Longer Term Generic Action as a Result of Davis-Besse Event of June 9, 1985," September 11, 1985. [9909290121]

949. Memorandum for F. Miraglia from G. Edison, "Prioritization of Generic Issue 125.II.I.D," April 25, 1986. [8605050358]

950. BAW-1919, "B&W Owners' Group Trip Reduction and Transient Response Improvement Program," May 31, 1986. [8606020079, 8605190153]

951. Memorandum for H. Thompson and W. Minners from F. Rowsome, "Another Generic Safety Issue Suggested by the Davis-Besse Incident of June 9, 1985," September 9, 1985. [8509110328]

952. Memorandum for W. Minners from K. Kniel, "Value/Impact Assessment for Draft CRGR Package Requiring Upgrading of Auxiliary Feedwater Systems in Certain Operating Plants," January 16, 1986. [8601240311]

953. Memorandum for G. Mazetis from A. Marchese, "Revised Outline of Regulatory Analysis for USI A-45," January 14, 1986. [9909290124]

954. Memorandum for V. Stello from E. Beckjord, "Closeout of TMI Action Plan Items," November 13, 1986.

955. Memorandum for W. Dircks from H. Denton, "Close Out of Completed TMI Action Plan Item I.C.9, 'Long-Term Program Plan for Upgrading of Procedures,'" June 7, 1985. [8506200155]

956. Memorandum for V. Stello from H. Denton, "Close-out of the Division of Human Factors Technology TMI Action Plan Items," January 6, 1987. [8701140115]

957. Federal Register Notice 49 FR 46428, "10 CFR Parts 50 and 55, Operator's Licenses and Conforming Amendment," November 26, 1984.

958. Memorandum for T. Speis from T. Novak, "Need for Oversight Guidance - Byron 2-Pump Service Water Issue and Related Generic Issues," May 6, 1986. [8605130362]

959. EGG-EA-5524, "Data Summaries of Licensee Event Reports of Pumps at U.S. Commercial Nuclear Power Plants from January 1, 1972, to September 30, 1980," Idaho National Engineering Laboratory, September 1981.

960. Letter to D. Ericson (Sandia National Laboratories) from J. Mulligan (United Engineers & Constructors), "Decay Heat Removal Systems Evaluations Feasibility and Cost Evaluations of Special Issues Related to Decay Heat Removal," January 20, 1986. [9910200312]

961. NUREG/CR-4627, "Generic Cost Estimates," U.S. Nuclear Regulatory Commission, June 1986, (Rev. 1) February 1989, (Rev. 2) February 1992.

962. NUREG-1021, "Operator Licensing Examiner Standards," U.S. Nuclear Regulatory Commission, October 1983.

963. SECY-85-21, "Policy Statement on Fitness for Duty of Nuclear Power Plant Personnel," January 17, 1985. [8502280427]

964. SECY-85-21A, "Withdrawal Notice: Fitness for Duty of Nuclear Power Plant Personnel," April 12, 1985. [8505030703]

965. SECY-85-21B, "Fitness for Duty of Nuclear Power Plant Personnel," August 26, 1985. [8510150472]

966. Federal Register Notice 50 FR 11147, "10 CFR Ch. 1, Commission Policy Statement on Training and Qualification of Nuclear Power Plant Personnel," March 20, 1985.

967. Federal Register Notice 51 FR 27921, "Commission Policy Statement on Fitness for Duty of Nuclear Power Plant Personnel," August 4, 1986.

968. Memorandum for J. Roe from R. Minogue, "Nuclear Plant Analyzer (NPA) Management Plan," December 12, 1985. [9909290129]

969. NUREG/CR-3403, "Criteria and Test Method for Certifying Air-Purifying Respirator Cartridges and Canisters Against Radioiodine," U.S. Nuclear Regulatory Commission, November 1983.

970. NUREG/CR-3568, "A Handbook for Value-Impact Assessment," U.S. Nuclear Regulatory Commission, December 1983.

971. NUREG/CR-4330, "Review of Light Water Reactor Regulatory Requirements," U.S. Nuclear Regulatory Commission, (Vol. 1) April 1986, (Vol. 2) June 1986.

972. SECY-80-230B, "Update of Chapter V of TMI Action Plan: NRC Policy, Organization, and Management," June 20, 1980. [8009160065]

973. Memorandum for T. Speis from W. Minners, "Schedule for Resolving Generic Issue No. 125.II.1.b, 'Review Existing AFW Systems for Single Failure,'" December 10, 1986. [8612180094]

974. NUREG-1122, "Knowledges and Abilities Catalog for Nuclear Power Plant Operators: Pressurized Water Reactors," U.S. Nuclear Regulatory Commission, July 1985.

975. IE Circular No. 80-02, "Nuclear Power Plant Staff Work Hours," U.S. Nuclear Regulatory Commission, February 1, 1980. [7912190657]

976. NRC Letter to All Licensees of Operating Plants and Applicants for Operating Licenses and Holders of Construction Permits, "Interim Criteria for Shift Staffing (Generic Letter 80-72)," July 31, 1980. [8009020297]

977. Federal Register Notice 47 FR 7352, "Nuclear Power Plant Staff Working Hours," February 18, 1982.

978. Federal Register Notice 47 FR 23836, "Nuclear Power Plant Staff Working Hours," June 1, 1982.

979. NRC Letter to All Licensees of Operating Plants, Applicants for an Operating License, and Holders of Construction Permits, "Nuclear Power Plant Staff Working Hours (Generic Letter No. 82-12)," June 15, 1982. [8206160341]

980. NRC Letter to All Pressurized Power Reactor Licensees, "NUREG-0737 Technical Specifications (Generic Letter No. 82-16)," September 20, 1982. [8209210027]

981. NRC Letter to All Boiling Water Reactor Licensees, "NUREG-0737 Technical Specifications (Generic Letter No. 83-02)," January 10, 1983. [8301110134]

982. NRC Letter to All Licensees of Operating Plants, Applicants for Operating Licenses, and Holders of Construction Permits, "Definition of 'Key Maintenance Personnel,' Clarification of Generic Letter 82-12 (Generic Letter 83-14)," March 7, 1983. [8303040005]

983. Memorandum for W. Dircks from J. Hoyle, "Updating NRC Policy Statements," September 30, 1985. [8611190084]

984. Memorandum for J. Tourtelotte, et al., from S. Chilk, "Addendum to SRM M841218 - Briefing and Discussion on the Hearing Process, 2:00 p.m., Tuesday, December 18, 1984, Commissioners' Conference Room, D.C. Office (Open to Public Attendance)," January 31, 1985. [8502060511]

985. Federal Register Notice 48 FR 50550, "10 CFR Part 2, Rules of Practice for Domestic Licensing Proceedings; Role of NRC Staff in Adjudicatory Licensing Hearings," November 2, 1983.

986. Federal Register Notice 51 FR 36811, "10 CFR Part 2, Rules of Practice for Domestic Licensing Proceedings; Role of NRC Staff in Adjudicatory Licensing Hearings," October 16, 1986.

987. Federal Register Notice 49 FR 14698, "10 CFR Parts 2 and 50, Request for Public Comment on Regulatory Reform Proposal Concerning the Rules of Practice, Rules for Licensing of Production and Utilization Facilities," April 12, 1984.

988. Federal Register Notice 51 FR 24365, "10 CFR Part 2, Rules of Practice for Domestic Licensing Proceedings - Procedural Changes in the Hearing Process," July 3, 1986.

989. Federal Register Notice 50 FR 13978, "10 CFR Part 140, Criteria for an Extraordinary Nuclear Occurrence," April 9, 1985.

990. Memorandum for J. Funches from F. Rowsome, "Handling of DHFT Issues in GIMCS," June 6, 1986. [8606120789]

991. Memorandum for T. Speis from R. Bernero, "Resolution of Comment No. 9 of CRGR/OIA Issues on Potential Generic Concerns Regarding BWR Drywell Coolers," July 31, 1986. [8608190656]

992. Federal Register Notice 50 FR 42145, "10 CFR Part 1, Statement of Organization and General Information," October 18, 1985.

993. NUREG-1220, "Training Review Criteria and Procedures," U.S. Nuclear Regulatory Commission, July 1986.

994. Federal Register Notice 48 FR 31611, "10 CFR Part 50, Licensed Operator Staffing at Nuclear Power Plants," July 11, 1983.

995. Regulatory Guide 1.114, "Guidance on Being Operator at the Controls of a Nuclear Power Plant," U.S. Nuclear Regulatory Commission, February 1976 [8012110846], (Rev. 1) November 1976 [8307070393], (Rev. 2) May 1989 [8906200342].

996. Federal Register Notice 50 FR 43621, "Commission Policy Statement on Engineering Expertise on Shift," October 28, 1985.

997. Memorandum for W. Dircks from H. Denton, "Human Factors Program Plan (HFPP)," December 6, 1984. [8501080482]

998. Memorandum for T. Speis from H. Denton, "Resolution of Generic Safety Issue 61, 'SRV Line Break Inside the Wetwell Airspace of Mark I and II Containments,'" August 8, 1986. [8608180209]

999. NUREG/CR-4594, "Estimated Safety Significance of Generic Safety Issue 61," U.S. Nuclear Regulatory Commission, June 1986.

1000. Memorandum for T. Speis, et al., from R. Mattson, "Generic Issue 23, 'Reactor Coolant Pump Seal Failures' - Task Action Plan," October 26, 1983. [8311080469]

1001. Memorandum for H. Denton from T. Speis, "Integration of Electrical Power Issues into Proposed Generic Issue 128, 'Electrical Power Reliability,'" November 28, 1986. [8612080528]

1002. Memorandum for H. Clayton from B. Sheron, "Criteria for Initiating Feed and Bleed," September 13, 1985. [8509180314]

1003. Memorandum for W. Russell from K. Perkins, "Generic Issue 125.I.8, 'Procedures and Staffing for Reporting to NRC Operations Center,'" November 25, 1986. [8612050442]

1004. Memorandum for G. Lainas and D. Crutchfield from F. Rowsome, "Davis-Besse Restart Considerations," August 13, 1985. [8508210208]

1005. Memorandum for V. Stello from D. Ward, "ACRS Comments on Proposed Resolution of Generic Issue 124, 'Auxiliary Feedwater System Reliability,'" September 17, 1986. [8609230137]

1006. NUREG-1195, "Loss of Integrated Control System Power and Overcooling Transient at Rancho Seco on December 26, 1985," U.S. Nuclear Regulatory Commission, February 1986.

1007. Memorandum for T. Speis from F. Miraglia, "Generic Action as a Result of the Rancho Seco Event of December 26, 1985," May 14, 1986. [8605200493]

1008. Memorandum for E. Jordan from G. Holahan, "Proposed IE Information Notice," June 6, 1986. [8606110821]

1009. NUREG/CR-4568, "A Handbook for Quick Cost Estimates," U.S. Nuclear Regulatory Commission, April 1986.

1010. IE Information Notice No. 86-61, "Failure of Auxiliary Feedwater Manual Isolation Valve," U.S. Nuclear Regulatory Commission, July 28, 1986. [8607240026]

1011. NUREG-1177, "Safety Evaluation Report Related to the Restart of Davis-Besse Nuclear Power Station, Unit 1, Following the Event of June 9, 1985," U.S. Nuclear Regulatory Commission, June 1986.

1012. Federal Register Notice 50 FR 29937, "10 CFR Part 50, Analysis of Potential Pressurized Thermal Shock Events," July 23, 1985.

1013. NUREG-1212, "Status of Maintenance in the U.S. Nuclear Power Industry 1985," U.S. Nuclear Regulatory Commission, (Volumes 1 and 2), June 1986.

1014. Memorandum for F. Schroeder from D. Crutchfield, "Dynamic Qualification Testing of Large Bore Hydraulic Snubbers," March 6, 1985. [8503180471]

1015. Memorandum for R. DeYoung, et al., from C. Heltemes, "Failure of Large Hydraulic Snubbers to Lock-up," September 21, 1984. [8410290312, 8410290114]

1016. NUREG/CR-4334, "An Approach to the Quantification of Seismic Margins in Nuclear Power Plants," U.S. Nuclear Regulatory Commission, August 1985.

1017. NUREG/CR-4279, "Aging and Service Wear of Hydraulic and Mechanical Snubbers Used on Safety-Related Piping and Components of Nuclear Power Plants," U.S. Nuclear Regulatory Commission, February 1986.

1018. NUREG/CR-4263, "Reliability Analysis of Stiff Versus Flexible Piping Final Project Report," U.S. Nuclear Regulatory Commission, May 1985.

1019. NUREG/CR-3756, "Seismic Hazard Characterization of the Eastern United States," U.S. Nuclear Regulatory Commission, April 1984.

1020. NRC Letter to All Power Reactor Licensees (Except SEP Licensees) and All Applicants for Licenses to Operate Power Reactors, "Technical Specification for Snubbers (Generic Letter 84-13)," May 3, 1984. [8405040043]

1021. EPRI NP-2297, "Snubber Reliability Improvement Study," Electric Power Research Institute, March 1982.

1022. NUREG-1144, "Nuclear Plant Aging Research (NPAR) Program Plan," U.S. Nuclear Regulatory Commission, July 1985.

1023. SECY-86-231, "Survey on Engineering Expertise on Shift," August 6, 1986. [8608200375]

1024. Memorandum for K. Kniel from C. Ferrell, "Modification of Generic Issue No. 106, 'Highly Combustible Gases in Vital Areas,'" February 20, 1986. [8602280811]

1025. IE Information Notice No. 83-41, "Actuation of Fire Suppression System Causing Inoperability of Safety-Related Equipment," U.S. Nuclear Regulatory Commission, June 22, 1983. [8305110477]

1026. Letter to D. Farrar (Commonwealth Edison Co.) from J. Zwolinski (NRC), "Technical Specifications Relating to the Use of a Mobile Volume Reduction System (MVRS) at Dresden Station (TAC 56373, 56374)," August 13, 1986. [8608210177]

1027. Memorandum for D. Eisenhut from G. Lainas, "Summary of the Operating Reactor Events Meeting," January 28, 1982. [8310260053]

1028. Memorandum for R. Vollmer and E. Jordan from C. Michelson, "Effects of Fire Protection System Actuation on Safety Related Equipment," January 28, 1982. [8202220663]

1029. "Guidelines for Permanent BWR Hydrogen Water Chemistry Installations," BWR Owners Group for IGSCC Research, Hydrogen Installation Subcommittee, Electric Power Research Institute, 1987.

1030. NASA TMX-71565, "Review of Hydrogen Accidents and Incidents in NASA Operation," National Aeronautics and Space Administration, August 1974.

1031. Memorandum for T. Murley from E. Beckjord, "A New Generic Issue: Multiple Steam Generator Tube Leakage," June 16, 1992. [9212040356]

1032. Memorandum for H. Denton from T. Speis, "Earthquakes and Emergency Planning," January 18, 1984. [8402020014]

1033. Letter to W. Dircks (NRC) from S. Sholly (Union of Concerned Scientists), December 22, 1983. [8502270371]

1034. Letter to J. Asselstine (NRC) from S. Sholly (Union of Concerned Scientists), December 22, 1983. [8502090516]

1035. SECY-85-283, "Final Amendments to 10 CFR Part 50, Appendix E; Consideration of Earthquakes in Emergency Planning," August 21, 1985. [8508300319]

1036. IE Bulletin No. 85-03, "Motor-Operated Valve Common Mode Failures During Plant Transients Due to Improper Switch Settings," U.S. Nuclear Regulatory Commission, November 15, 1985 [8511130441], (Supplement 1) April 27, 1988 [8804210018].

1037. SECY-83-484, "Requirements for Emergency Response Capability," November 29, 1983. [8312130459]

1038. IE Information Notice No. 86-10, "Safety Parameter Display System Malfunctions," U.S. Nuclear Regulatory Commission, February 13, 1986. [8602100408]

1039. Memorandum for H. Denton from T. Speis, "Prioritization of Selected MPAs (Operating Plan, Item VI.B.6.b)," October 19, 1984. [8411010640]

1040. NUREG/CR-3246, "The Effect of Some Operations and Control Room Improvements on the Safety of the Arkansas Nuclear One, Unit One, Nuclear Power Plant," U.S. Nuclear Regulatory Commission, June 1983.

1041. Memorandum for K. Kniel from R. Bosnak, "Request for Subsumption of Generic Issue B-6 (GI B-6) Into Generic Isssue 119.1 (GI 119.1)," January 8, 1987. [8701200186]

1042. SECY-87-101, "Issues and Proposed Options Concerning Degree Requirement for Senior Operators," April 16, 1987. [8706030157]

1043. SECY-86-348, "Final Rulemaking for Revisions to Operator Licensing - 10 CFR 55 and Conforming Amendments," November 21, 1986. [8701020003]

1044. Federal Register Notice 52 FR 16007, "Regulatory Guides; Issuance and Availability," May 1, 1987.

1045. Memorandum for V. Stello from E. Beckjord, "Resolution of TMI Action Plan Items and Human Factors Issues," May 18, 1987. [8710280270]

1046. Memorandum for V. Stello from E. Beckjord, "Closeout of TMI Action Plan Item," February 27, 1987. [9704150146]

1047. Memorandum for K. Kniel from B. Sheron, "Request for the Prioritization of a Generic Issue on the Reliability of PWR Main Steam Safety Valves," May 27, 1986. [8604030313]

1048. IE Information Notice No. 86-05, "Main Steam Safety Valve Test Failures and Ring Setting Adjustments," U.S. Nuclear Regulatory Commission, January 31, 1986 [8601290054], (Supplement 1) October 16, 1986 [8610100107].

1049. Memorandum for F. Cherny from R. Baer, "50.55(e) Report on Crosby Main Steam Valve Ring Settings," February 5, 1985. [8502140267, 9704090262]

1050. Memorandum for R. Bosnak from F. Cherny, "Trip Report - Meeting of ASME Section III Subgroup on Pressure Relief, February 11, 1987," March 13, 1987. [8703190114]

1051. INPO 82-025, "Review of NRC Report: Precursors to Potential Severe Core Damage Accidents: 1969-1979 A Status Report, NUREG/CR-2497," Institute for Nuclear Power Operations, September 1982.

1052. NUREG/CR-2228, "Containment Response During Degraded Core Accidents Initiated by Transients and Small Break LOCA in the Zion/Indian Point Reactor Plants," U.S. Nuclear Regulatory Commission, July 1981.

1053. NUREG/CR-4752, "Coincident Steam Generator Tube Rupture and Stuck-Open Safety Relief Valve Carryover Test," U.S. Nuclear Regulatory Commission, March 1987.

1054. Memorandum for W. Russell, et al., from R. Starostecki, "Request for Regional Inspection to Verify Adequate Flow Capacity of Main Steam Code Safety Valves and Proper Ring Adjustments," November 8, 1987. [8711120155]

1055. AEOD/C204, "San Onofre Unit 1 Loss of Salt Water Cooling Event on March 10, 1980," Office for Analysis and Evaluation of Operational Data, U.S. Nuclear Regulatory Commission, July 1982. [8208260403]

1056. NUREG-0869, "USI A-43 Regulatory Analysis," U.S Nuclear Regulatory Commission, (Rev. 1) October 1985.

1057. NUREG-0897, "Containment Emergency Sump Performance," U.S. Nuclear Regulatory Commission, (Rev. 1) October 1985.

1058. Regulatory Guide 1.82, "Water Sources for Long-Term Recirculation Cooling Following a Loss-of-Coolant Accident," U.S. Nuclear Regulatory Commission, June 30, 1974 [7902090041], (Rev. 1) November 30, 1985 [8512100138], (Rev. 2) May 31, 1996 [9605210504].

1059. NRC Letter to All Licensees of Operating Reactors, Applicants for Operating Licenses, and Holders of Construction Permits, "Potential for Loss of Post-LOCA Recirculation Capability Due to Insulation Debris Blockage (Generic Letter 85-22)," December 3, 1985. [8511270253]

1060. SECY-85-349, "Resolution of Unresolved Safety Issue A-43, 'Containment Emergency Sump Performance,'" October 31, 1985. [8511070302]

1061. NUREG-0649, "Task Action Plans for Unresolved Safety Issues Related to Nuclear Power Plants," U.S. Nuclear Regulatory Commission, February 1980, (Rev. 1) September 1984.

1062. Federal Register Notice 51 FR 39390, "10 CFR Part 50, Emergency Planning and Preparedness; Withdrawal," October 28, 1986.

1063. NUREG/CR-3017, "Correlation of Seismic Experience Data in Non-Nuclear Facilities with Seismic Equipment Qualification in Nuclear Plants (A-46)," U.S. Nuclear Regulatory Commission, August 1983.

1064. NUREG/CR-3875, "The Use of In-Situ Procedures for Seismic Qualification of Equipment in Currently Operating Plants," U.S. Nuclear Regulatory Commission, June 1984.

1065. NUREG/CR-3357, "Identification of Seismically Risk Sensitive Systems and Components in Nuclear Power Plants," U.S. Nuclear Regulatory Commission, June 1983.

1066. NUREG/CR-3266, "Seismic and Dynamic Qualification of Safety-Related Electrical and Mechanical Equipment in Operating Nuclear Power Plants," U.S. Nuclear Regulatory Commission, September 1983.

1067. NUREG-1211, "Regulatory Analysis for Resolution of Unresolved Safety Issue A-46, 'Seismic Qualification of Equipment in Operating Plants,'" U.S. Nuclear Regulatory Commission, February 1987.

1068. Regulatory Guide 1.154, "Format and Content of Plant-Specific Pressurized Thermal Shock Safety Analysis Reports for Pressurized Water Reactors," U.S. Nuclear Regulatory Commission, January 1987.

1069. NRC Letter to All Holders of Operating Licenses Not Reviewed to Current Licensing Criteria on Seismic Qualification of Equipment, "Verification of Seismic Adequacy of Mechanical and Electrical Equipment in Operating Reactors, Unresolved Safety Issue (USI) A-46 (Generic Letter 87-02)," February 19, 1987. [8702200135]

1070. NUREG-1216, "Safety Evaluation Report Related to the Operability and Reliability of Emergency Diesel Generators Manufactured by Transamerica Delaval, Inc.," U.S. Nuclear Regulatory Commission, August 1986.

1071. Memorandum for T. Speis, et al., from C. Berlinger, "Closeout of Generic Issue 91 - TDI Emergency Diesel Generator Reliability," September 3, 1987. [8709080427]

1072. Memorandum for W. Russell from T. Speis, "Generic Issue 125.II.13 - Operator Job Aids," June 12, 1986. [8606250128]

1073. SECY-83-288, "Pressurized Thermal Shock (PTS) Rule," July 15, 1983. [8307270206]

1074. Memorandum for W. Dircks from S. Chilk, "SECY-83-288, 'Proposed Pressurized Thermal Shock (PTS) Rule,'" January 13, 1984. [8402100267]

1075. Memorandum for K. Kniel from R. Bosnak, "Integration of NUREG-0933 Issues," May 27, 1986. [8606090491]

1076. NUREG-1230, "Compendium of ECCS Research for Realistic LOCA Analysis," U.S. Nuclear Regulatory Commission, December 1988. [8903030340]

1077. Federal Register Notice 52 FR 9453, "10 CFR Parts 50 and 55, Operators' Licenses and Conforming Amendments," March 25, 1987.

1078. AEOD/C701, "Air Systems Problems at U.S. Light Water Reactors," Office for Analysis and Evaluation of Operational Data, U.S. Nuclear Regulatory Commission, March 1987. [8707240066]

1079. NUREG-1275, "Operating Experience Feedback Report," U.S. Nuclear Regulatory Commission, (Vol. 1) July 1987, (Vol. 2) December 1987, (Vol. 3) November 1988, (Vol. 4) March 1989, (Vol. 5) March 1989, (Vol. 5, Addendum) August 1989, (Vol. 6) February 1991, (Vol. 7) September 1992, (Vol. 8) December 1992, (Vol. 9) March 1993.

1080. NUREG/CR-4374, "A Review of the Oconee-3 Probabilistic Risk Assessment," U.S. Nuclear Regulatory Commission, (Vol. 1) March 1986, (Vol. 2) March 1986, (Vol. 3) June 1986.

1081. NUREG-1150, "Severe Accident Risks: An Assessment for Five U.S. Nuclear Power Plants," U.S. Nuclear Regulatory Commission, (Vol. 1) December 1990, (Vol. 2) December 1990, (Vol. 3) January 1991.

1082. NUREG/CR-3673, "Economic Risks of Nuclear Power Reactor Accidents," U.S. Nuclear Regulatory Commission, May 1984.

1083. Memorandum for T. Speis from F. Gillespie, "Review of RES Proposed Prioritization of Generic Issue (GI) 125.II.11, 'Recovery of Main Feedwater as an Alternative to Auxiliary Feedwater,'" April 27, 1988. [8805120322]

1084. NUREG-1258, "Evaluation Procedure for Simulation Facilities Certified Under 10 CFR 55," U.S. Nuclear Regulatory Commission, December 1987.

1085. NRC Letter to All Operating Reactor Licensees, Applicants for an Operating License and Holders of Construction Permits for Babcock & Wilcox Pressurized Water Reactors, "Safety Evaluation of 'Abnormal Transient Operating Guidelines,' (Generic Letter 83-31)," September 19, 1983. [8309190017]

1086. Memorandum for B. Morris from B. Sheron, "LOCA Concern of SCE Employee," April 28, 1987. [9704150141]

1087. Federal Register Notice 50 FR 27006, "10 CFR Part 50, Modification of General Design Criterion 4 Requirements for Protection Against Dynamic Effects of Postulated Pipe Ruptures," July 1, 1985.

1088. UCID-20397, "Assessment of Value-Impact Associated with the Elimination of Postulated Pipe Ruptures from the Design Basis for Nuclear Power Plants," Lawrence Livermore National Laboratory, March 29, 1985.

1089. Letter to the Honorable Edward J. Markey (Committee on Energy and Commerce, U.S. House of Representatives) from L. Zech (NRC), March 20, 1987. [8703270224]

1090. GAO/RCED-88-73, "Nuclear Regulation - Action Needed to Ensure that Utilities Monitor and Repair Pipe Damage," U.S. General Accounting Office, March 1988.

1091. Memorandum for D. Morrison from H. Thompson, "Generic Issue Management Control System," January 17, 1997. [9803260111]

1092. EPRI NP-5410, "Nondestructive Evaluation of Ferritic Piping for Erosion-Corrosion," Electric Power Research Institute, September 1987.

1093. NRC Bulletin No. 87-01, "Thinning of Pipe Walls in Nuclear Power Plants," U.S. Nuclear Regulatory Commission, July 9, 1987. [8707020018]

1094. SECY-88-50, "Status Report on Pipe Wall Thinning (Responses to NRC Bulletin 87-01 on Pipe Wall Thinning in Nuclear Power Plants)," February 22, 1988. [8809090066]

1095. NRC Information Notice No. 88-17, "Summary of Responses to NRC Bulletin 87-01, Thinning of Pipe Walls in Nuclear Power Plants," U.S. Nuclear Regulatory Commission, April 22, 1988. [8804180039]

1096. SECY-88-50A, "Report on the Meeting with NUMARC, EPRI, and INPO on Status of Industry's Erosion/Corrosion Program," May 10, 1988. [8805230074]

1097. Memorandum to J. Taylor and W. Parler from S. Chilk, "COMSECY-93-029 - Draft Rulemaking Package on License Renewal; SECY-93-049 - Implementation of 10 CFR Part 54, 'Requirements for Renewal of Operating Licenses for Nuclear Power Plants'; SECY-93-113 - Additional Implementation Information for 10 CFR Part 54, 'Requirements for Renewal of Operating Licenses for Nuclear Power Plants,'" June 28, 1993. [9409010107]

1098. Memorandum for V. Stello from T. Murley, "Resolution of Generic Issue I.A.4.2(4) 'Review Simulators for Conformance to Criteria,'" May 28, 1988. [8806020275]

1099. Memorandum for B. Morris from B. Sheron, "Updated GIMCS for GI I.D.5(5)," February 2, 1988. [9704150145]

1100. Memorandum for V. Stello from E. Beckjord, "Redesignation of Generic Issue I.D.5(5), 'Disturbance Analysis Systems,'" February 22, 1988. [8809190312]

1101. Memorandum for V. Stello from E. Beckjord,""Closure of Generic Issue I.D.4 'Control Room Design Standard,'" March 28, 1988. [9704160014]

1102. Memorandum for T. Speis from R. Houston, Integration of Generic Issue Resolution," November 4, 1987. [9704150161]

1103. Memorandum for V. Stello from E. Beckjord, "Resolution of Generic Safety Issue II.E.4.3, `Containment Integrity Check,'" March 22, 1988. [8809150125]

1104. NUREG-1273, "Technical Findings and Regulatory Analysis for Generic Safety Issue II.E.4.3, 'Containment Integrity Check,'" U.S. Nuclear Regulatory Commission, April 1988.

1105. Memorandum for T. Speis from G. Arlotto, "Generic Issues Program," January 14, 1988. [9704160053]

1106. Memorandum for R. Baer from G. Bagchi, "Proposed Resolution of Generic Issue B-5, 'Buckling of Steel Containment,'" March 1, 1988. [8804270290]

1107. Memorandum for E. Beckjord from G. Arlotto, "Closeout of Generic Issue B-5, Buckling Behavior of Steel Containments," April 28, 1988. [8805050117]

1108. NUREG-1109, "Regulatory/Backfit Analysis for the Resolution of Unresolved Safety Issue A-44, Station Blackout," U.S. Nuclear Regulatory Commission, June 1988.

1109. Federal Register Notice 53 FR 23203, "10 CFR 50, Station Blackout," June 21, 1988.

1110. Regulatory Guide 1.155, "Station Blackout," U.S. Nuclear Regulatory Commission, June 1988. [8907270193]

1111. NRC Letter to All Licensees of Operating Boiling Water Reactors (BWRs), and Holders of Construction Permits, "NRC Position on IGSCC in BWR Austenitic Stainless Steel Piping (Generic Letter 88-01)," January 25, 1988. [8801260537]

1112. IE Bulletin No. 85-01, "Steam Binding of Auxiliary Feedwater Pumps," U.S. Nuclear Regulatory Commission, October 29, 1985. [8510250539]

1113. NRC Letter to All Licensees, Applicants for Operating Licenses, and Holders of Construction Permits for Pressurized Water Reactors, "Resolution of Generic Safety Issue 93, 'Steam Binding of Auxiliary Feedwater Pumps' (Generic Letter 88-03)," February 17, 1988. [8802180267]

1114. Memorandum for E. Beckjord from T. Murley, "Resolution of Generic Safety Issue 93, 'Steam Binding of Auxiliary Feedwater Pumps,'" August 14, 1987. [8708210408]

1115. Memorandum for E. Beckjord from F. Gillespie, "Review of RES-Proposed Prioritization of Generic Issue No. 136, 'Storage and Use of Large Quantities of Cryogenic Combustibles on Site,'" March 25, 1988. [8804050182]

1116. Federal Register Notice 53 FR 9430, "Final Commission Policy Statement on Maintenance of Nuclear Power Plants," March 23, 1988.

1117. Memorandum for V. Stello from T. Murley, "Closeout of Generic Issue HF-08, 'Maintenance and Surveillance Program,'" May 4, 1988. [8805160004]

1118. SECY-88-248, "Implementation of the Severe Accident Policy for Future Light Water Reactors," September 6, 1988. [8809160019]

1119. NUREG/CR-4780, "Procedures for Treating Common Cause Failures in Safety and Reliability Studies," U.S. Nuclear Regulatory Commission, (Vol. 1) January 1988, (Vol. 2) January 1989.

1120. NUREG-1192, "An Investigation of the Contributors to Wrong Unit or Wrong Train Events," U.S. Nuclear Regulatory Commission, April 1986.

1121. Information Notice No. 87-25, "Potentially Significant Problems Resulting from Human Error Involving Wrong Unit, Wrong Train, or Wrong Components," U.S. Nuclear Regulatory Commission, June 11, 1987. [8706050211]

1122. Memorandum for V. Stello from T. Murley, "Final Resolution of Generic Issue (GI) 102: Human Error in Events Involving Wrong Unit or Wrong Train," September 12, 1988. [8810070118]

1123. Dam Failure Model, Pacific Northwest Laboratories, October 1983.

1124. "Analysis of Gradual Earth-Dam Failure," Journal of Hydraulic Engineering, Volume 114, No. 1, American Society of Civil Engineers, January 1988.

1125. "Use of A Dam Break Model to Assess Flooding at Haddam Neck Nuclear Power Plant," Water Resources Bulletin, Vol. 20, No. 6, American Water Resources Association, December 1984.

1126. Technical Evaluation Report, "Quabbin Dam Failure Flooding Consequences at Haddam Neck Plant," Franklin Research Center, August 25, 1983.

1127. "Dam Breach Parameters, Outflow Peaks, and Flood Stages," International Symposium on Hydrometeorology, American Water Resources Association, June 1982.

1128. PB82-224577, "Application of and Guidelines for Using Available DAM Break Models," Tennessee Water Resources Research Center, May 1981.

1129. IE Bulletin No. 82-02, "Degradation of Threaded Fasteners in the Reactor Coolant Pressure Boundary of PWR Plants," U.S. Nuclear Regulatory Commission, June 2, 1982. [8204210380]

1130. RIL 158, "Operational Safety Reliability Program," U.S. Nuclear Regulatory Commission, October 31, 1988. [8811070111]

1131. Memorandum for V. Stello from E. Beckjord, "Closure of Generic Issue II.C.4, 'Reliability Engineering,'" October 31, 1988. [8811150124]

1132. Memorandum for E. Beckjord from F. Gillespie, "Generic Issue 139, 'Thinning of Carbon Steel Piping in LWRs,'" December 27, 1988. [8901130015]

1133. NUREG-1332, "Regulatory Analysis for the Resolution of Generic Issue 125.II.7, 'Reevaluate Provision to Automatically Isolate Feedwater from Steam Generator During a Line Break,'" U.S. Nuclear Regulatory Commission, September 1988.

1134. Memorandum for V. Stello from E. Beckjord, "Resolution of Generic Issue 125.II.7, 'Reevaluate Provision to Automatically Isolate Feedwater from Steam Generator During a Line Break,'" September 9, 1988. [8811290524]

1135. NUREG-0848, "Final Environmental Statement Related to the Operation of Byron Station Units 1 and 2," U.S. Nuclear Regulatory Commission, April 1982.

1136. Memorandum to C. Miller from R. Borchardt, "Review of Temporary Instruction 2515/131, 'Licensee Offsite Communication Capabilities,' for Deletion from the NRC Inspection Manual," December 3, 1996. [9612060074]

1137. SECY-86-97, "Steam Generator USI Program - Utility Responses to Staff Recommendations in Generic Letter 85-02," March 24, 1986. [8609160048]

1138. NRC Bulletin No. 88-02, "Rapidly Propagating Fatigue Cracks in Steam Generator Tubes," February 5, 1988. [8802020035]

1139. SECY-88-272, "Technical Resolution of Unresolved Safety Issues A-3, A-4, and A-5 Regarding Steam Generator Tube Integrity," September 27, 1988. [8811040042]

1140. NRC Information Notice No. 87-28, "Air Systems Problems at U.S. Light Water Reactors," June 22, 1987 [8706170115], (Supplement 1) December 28, 1987 [8712230003].

1141. NRC Letter to All Holders of Operating Licenses or Construction Permits for Nuclear Power Plants, "Instrument Air Supply System Problems Affecting Safety-Related Equipment (Generic Letter 88-14)," August 8, 1988. [8808120294]

1142. Memorandum for V. Stello from E. Beckjord, "Resolution of Generic Issue 43, Air Systems Reliability," September 30, 1988. [9704160039]

1143. SECY-88-260, "Shutdown Decay Heat Removal Requirements (USI A-45)," September 13, 1988. [8811040098]

1144. NUREG/CR-5015, "Improved Reliability of Residual Heat Removal Capability in PWRs as Related to Resolution of Generic Issue 99," U.S. Nuclear Regulatory Commission, May 1988.

1145. NRC Letter to All Holders of Operating Licenses or Construction Permits for Pressurized Water Reactors (PWRs), "Loss of Decay Heat Removal (Generic Letter No. 88-17) 10 CFR 50.54f," October 17, 1988. [8810180350]

1146. Memorandum for V. Stello from E. Beckjord, "Resolution of Generic Issue 99, 'Loss of RHR Capability in PWRs,'" November 2, 1988. [8811290361]

1147. Memorandum for V. Stello from T. Murley, "Final Resolution of Generic Issue (GI) 66, 'Steam Generator Requirements,'" November 28, 1988. [8812010081]

1148. Memorandum for W. Minners from F. Rowsome, "A Candidate Generic Issue," December 11, 1984. [8501080138]

1149. Regulatory Guide 1.65, "Materials and Inspections for Reactor Vessel Closure Studs," U.S. Atomic Energy Commission, October 1973. [7907100246]

1150. Memorandum for W. Minners from A. Thadani, "Prioritization of RHR Suction Valve Testing," May 7, 1984. [8405180403]

1151. NUREG/CR-2934, "Review and Evaluation of the Indian Point Probabilistic Safety Study," U.S. Nuclear Regulatory Commission, December 1982.

1152. NUREG/CR-3300, "Review and Evaluation of the Zion Probabilistic Safety Study," U.S. Nuclear Regulatory Commission, (Vol. 1) May 1984.

1153. Memorandum for F. Cherny from W. Minners, "Reactor Coolant System Pressure Isolation Valve (PIV) Leak Test Requirements," July 2, 1985. [8507120595]

1154. Regulatory Guide 1.25, "Assumptions Used for Evaluating the Potential Radiological Consequences of a Fuel Handling Accident in the Fuel Handling and Storage Facility for Boiling and Pressurized Water Reactors," U.S. Atomic Energy Commission, March 1972. [7907100118]

1155. Memorandum for R. Bernero from T. Speis, "Relationship of TIA 84-72 (Haddam Neck Refueling Cavity Seal Failure) to Generic Issue No. 82 (Beyond Design Basis Accidents in Spent Fuel Pools)," April 11, 1985. [8504240705]

1156. Memorandum for K. Kniel from W. Minners, "Refueling Cavity Seal Failure," April 1, 1986. [8604080427]

1157. NUREG/CR-4982, "Severe Accidents in Spent Fuel Pools in Support of Generic Safety Issue 82," U.S. Nuclear Regulatory Commission, July 1987.

1158. IE Bulletin No. 84-03, "Refueling Cavity Seal Failure," U.S. Nuclear Regulatory Commission, August 24, 1984. [8408240358]

1159. Letter to D. Crutchfield (NRC) from W. Counsil (Connecticut Yankee Atomic Power Company), "Haddam Neck Plant Reactor Cavity Seal Ring Failure," September 12, 1984. [8409250335]

1160. Memorandum for K. Kniel from W. Minners, "Refueling Cavity Seal Failure," May 8, 1986. [8605210217]

1161. Memorandum for K. Kniel from W. Minners, "Proposed Generic Issue - Fission Product Removal by Containment Sprays or Pools," March 10, 1987. [8703170451]

1162. Federal Register Notice 54 FR 3701, "[NUREG-0800] Standard Review Plan for the Review of Safety Analysis Reports for Nuclear Power Plants; Issuance and Availability," January 25, 1989.

1163. Memorandum for T. Speis from K. Kniel, "Treatment of Lessons-Learned from Surry Event as Related to Generic Issues," March 31, 1987. [8704030542]

1164. Memorandum for T. Speis from R. Bernero, "Prioritization of Generic Issue - Valve Interlocks to Prevent Vessel Draining During Shutdown Cooling," May 21, 1986. [8606120635]

1165. AEOD/E609, "Inadvertent Draining of Reactor Vessel During Shutdown Cooling Operation," Office for Analysis and Evaluation of Operational Data, U.S. Nuclear Regulatory Commission, August 1986. [8608290176, 8608290040]

1166. Memorandum for T. King from K. Kniel, "Additional Comments Regarding Prioritization of Generic Issue-129, 'Residual Heat Removal System Valve Mis-alignment during Shutdown Cooling Operations,'" December 7, 1988. [8812210402]

1167. Memorandum for W. Minners from B. Sheron, "Proposed Generic Issue, 'Potential Seismic Interaction Involving the Movable In-Core Flux Mapping System Used in Westinghouse Designed Plants,'" August 27, 1985. [8509050358]

1168. Letter to F. Miraglia (NRC) from G. Goering (Westinghouse Owners Group), "Potential Seismic Interaction Associated with the Flux Mapping System in Westinghouse Plants," June 10, 1985. [8509050363]

1169. NUREG/CR-2000, "Licensee Event Report (LER) Compilation," U.S. Nuclear Regulatory Commission, (Vol. 3, No. 7) August 1984.

1170. Memorandum for T. King from R. Riggs, "Computer Program 'SEALCOM' Used in Generic Issue 131," May 1, 1989. [9704160010]

1171. IE Information Notice No. 85-45, "Potential Seismic Interaction Involving the Movable In-Core Flux Mapping System Used in Westinghouse Designed Plants," U.S. Nuclear Regulatory Commission, June 6, 1985. [8506060677]

1172. Letter to R. Engelken (NRC) from H. Ray (Southern California Edison Company), "Docket No. 50-361, Licensee Event Report, Numbers 82-002 and 82-003, San Onofre Nuclear Generating Station, Unit 2," March 30, 1982. [8204140262]

1173. Letter to R. Haynes (NRC) from C. Mathis (Boston Edison Company), "Docket No. 50-293, License DPR-35," September 15, 1982. [8209280087]

1174. NUREG-1251, "Implications of the Accident at Chernobyl for Safety Regulation of Commercial Nuclear Power Plants in the United States," U.S. Nuclear Regulatory Commission, (Vols. I and II) April 1989.

1175. SECY-89-081, "Final Report on Chernobyl Implications," March 7, 1989. [8903200205]

1176. AEOD/S801, "Significant Events that Involved Procedures," Office for Analysis and Evaluation of Operational Data, U.S. Nuclear Regulatory Commission, March 1988. [8907310351, 8906090032]

1177. NRC Letter to All Holders of Operating Licenses, Applicants for Operating Licenses and Holders of Construction Permits for Power Reactors, "NRC Use of the Terms, 'Important to Safety' and 'Safety Related"(Generic Letter 84-01)," January 5, 1984. [8401050382]

1178. NRC Memorandum and Order CLI-84-9, June 6, 1984. [8406070146]

1179. SECY-85-119, "Issuance of Proposed Rule on the Important-to-Safety Issue," April 5, 1985. [8505030656]

1180. Memorandum for W. Dircks from S. Chilk, "Staff Requirements -- SECY-85-119 - 'Issuance of Proposed Rule on the Important-to-Safety Issue,'" December 31, 1985. [8601160559]

1181. SECY-86-164, "Proposed Rule on the Important-to-Safety Issue," May 29, 1986. [8607010004]

1182. Memorandum for V. Stello from E. Beckjord, "Resolution of Generic Issue I.F.1, "Expand QA List,'" January 12, 1989. [9704150147]

1183. Memorandum for W. Minners from L. Engle, "Generic Implications/LLNL Technical Evaluation Report on Seven Main Transformer Failures at the North Anna Power Station, Units 1 and 2," November 16, 1984. [8411270057]

1184. UCID-20053, "Technical Evaluation Report on the Seven Main Transformer Failures at the North Anna Power Station, Units 1 and 2," Lawrence Livermore National Laboratory, March 29, 1984. [8412120181, 8412070065]

1185. Regulatory Guide 1.120, "Fire Protection Guidelines for Nuclear Power Plants," U.S. Nuclear Regulatory Commission, (Draft) June 1976, (Draft) November 1977.

1186. NUREG/CR-3862, "Development of Transient Initiating Event Frequencies for Use in Probabilistic Risk Assessments," U.S. Nuclear Regulatory Commission, May 1985.

1187. Memorandum for V. Stello from E. Beckjord, "Closeout of Generic Issue II.F.5, 'Classification of Instrumentation, Control and Electrical Equipment,'" May 5, 1989. [8906270390]

1188. SECY-83-221, "Prioritization of Generic Safety Issues," June 7, 1983. [8306150099]

1189. Memorandum for W. Dircks from S. Chilk, "SECY-83-221 - Prioritization of Generic Safety Issues," December 9, 1983. [9704150148]

1190. Federal Register Notice 43 FR 1565, "Program for Resolution of Generic Issues Related to Nuclear Power Plants," January 10, 1978.

1191. Federal Register Notice 54 FR 24432, "Program for Resolution of Generic Issues Related to Nuclear Power Plants; Policy Statement," June 7, 1989.

1192. RES Office Letter No. 1, "Procedure for Identification, Prioritization, Resolution, and Tracking of Generic Issues," Office of Nuclear Regulatory Research, December 3, 1987 [9704150149], (Rev. 1) March 22, 1989 [9609200344], (Rev. 2) July 12, 1991 [9107250098], (Rev. 3) November 26, 1991 [9704150154], (Rev. 4) June 2, 1994 [9704150218].

1193. RES Office Letter No. 2, "Procedures for Obtaining Regulatory Impact Analysis Review and Support," Office of Nuclear Regulatory Research, November 18, 1988. [8901180069]

1194. RES Office Letter No. 3, "Procedure and Guidance for the Resolution of Generic Issues," May 10, 1988 [8809220069], (Rev. 1) December 21, 1988 [9704100054], (Rev. 2) March 27, 1989 [9609200351].

1195. NUREG/CR-1251, "Implications of the Accident at Chernobyl for Safety Regulation of Commercial Nuclear Power Plants in the United States," U.S. Nuclear Regulatory Commission, (Vol. 1) April 1989, (Vol. 2) April 1989.

1196. NUREG/CR-5176, "Seismic Failure and Cask Drop Analyses of the Spent Fuel Pools at Two Representative Nuclear Power Plants," U.S. Nuclear Regulatory Commission, January 1989.

1197. NUREG/CR-5281, "Value/Impact Analyses of Accident Preventive and Mitigative Options for Spent Fuel Pools," U.S. Nuclear Regulatory Commission, March 1989.

1198. NUREG-1353, "Regulatory Analysis for the Resolution of Generic Issue 82 'Beyond Design Basis Accidents in Spent Fuel Pools,'" U.S. Nuclear Regulatory Commission, April 1989.

1199. Memorandum for V. Stello from E. Beckjord, "Resolution of Generic Issue, 'Beyond Design Basis Accidents in Spent Fuel Pools,'" April 24, 1989. [9704100053]

1200. NUREG/CR-5197, "Evaluation of Generic Issue 115, 'Enhancement of the Reliability of Westinghouse Solid State Protection System,'" U.S. Nuclear Regulatory Commission, January 1989.

1201. NUREG-1341, "Regulatory Analysis for the Resolution of Generic Issue 115, 'Enhancement of the Reliability of the Westinghouse Solid State Protection System,'" U.S. Nuclear Regulatory Commission, May 1989.

1202. Memorandum for V. Stello from E. Beckjord, "Resolution of Generic Issue 115, 'Enhancement of the Reliability of Westinghouse Solid State Protection Systems,' NUREG-1341," April 17, 1989. [9608210072]

1203. Memorandum for V. Stello from T. Murley, "Plant-Specific Backfit for Improved Auxiliary Feedwater System Reliability at Arkansas Nuclear One, Unit 2 and Rancho Seco," January 31, 1989. [8902030163]

1204. Memorandum for V. Stello from T. Murley, "Final Resolution of Generic Issue (GI) 122.2, 'Initiating Feed and Bleed,'" April 26, 1989. [8905090075]

1205. NRC Letter to All Licensees of Operating Plants, Applicants for Operating Licenses, and Holders of Construction Permits, "Task Action Plan I.D.2 - Safety Parameter Display System - 10 CFR §50.54(f) - (Generic Letter No. 89-06)," April 12, 1989. [8904120042]

1206. NUREG-1342, "A Status Report Regarding Industry Implementation of Safety Parameter Display Systems," U.S. Nuclear Regulatory Commission, April 1989.

1207. Memorandum for V. Stello from T. Murley, "Final Resolution of Generic Issue 125.I.3, 'SPDS Availability,'" April 26, 1989. [8905050362]

1208. Memorandum for V. Stello from T. Murley, "Final Resolution of Generic Issue (GI) HF4.1, Inspection Procedure for Upgraded Emergency Operating Procedures," October 17, 1988. [8811070169]

1209. NUREG-1358, "Lessons Learned from the Special Inspection Program for Emergency Operating Procedures," U.S. Nuclear Regulatory Commission, April 1989.

1210. NRC Information Notice No. 86-64, "Deficiencies in Upgrade Programs for Plant Emergency Operating Procedures," August 14, 1986 [8608120028], (Supplement 1) April 20, 1987 [8704160062].

1211. NUREG/CR-5088, "Fire Risk Scoping Study: Investigation of Nuclear Power Plant Fire Risk, Including Previously Unaddressed Issues," U.S. Nuclear Regulatory Commission, January 1989.

1212. NUREG/CR-5112, "Evaluation of Boiling Water Reactor Water-Level Sensing Line Break and Single Failure," U.S. Nuclear Regulatory Commission, March 1989.

1213. NRC Letter to All Holders of Operating Licenses or Construction Permits for Boiling Water Reactors, "Resolution of Generic Issue 101, 'Boiling Water Reactor Water Level Redundancy' (Generic Letter 89-11)," June 30, 1989. [8906300178]

1214. Memorandum for V. Stello from E. Beckjord, "Closeout of GI 101, 'Boiling Water Reactor Water Level Redundancy,'" April 24, 1989. [9704100038]

1215. Regulatory Guide 1.106, "Thermal Overload Protection for Electric Motors on Motor-Operated Valves," U.S. Nuclear Regulatory Commission, November 1975, (Rev. 1) March 1977. [7907100392]

1216. NUREG-1296, "Thermal Overload Protection for Electric Motors on Safety-Related Motor-Operated Valves - Generic Issue II.E.6.1," U.S. Nuclear Regulatory Commission, June 1988.

1217. NRC Letter to All Licensees of Operating Power Plants and Holders of Construction Permits for Nuclear Power Plants, "Safety-Related Motor-Operated Valve Testing and Surveillance (Generic Letter No. 89-10) - 10 CFR 50.54(f)," June 28, 1989 [8906290082], (Supplement 1) June 13, 1990 [9201300217], (Supplement 2) August 3, 1990 [9007310052], (Supplement 3) October 25, 1990 [9010220146], (Supplement 4) February 12, 1992 [9202250311], (Supplement 5) June 28, 1993 [9306230099], (Supplement 6) March 8, 1994 [9402280155].

1218. Memorandum for V. Stello from E. Beckjord, "Close-out of Generic Issue II.E.6.1, 'In Situ Testing of Valves,'" June 30, 1989. [8907100275]

1219. Memorandum for F. Rowsome from D. Crutchfield, "Potential Generic Issue: Loss of Effective Volume for Containment Recirculation Spray," July 13, 1984. [8407240406]

1220. Memorandum for G. Lainas from R. Houston, "Task Interface Agreement (TIA) #83-144: Loss of Effective Volume for Containment Recirculation Spray for H.B. Robinson, Unit 2 (TAC #53223)," August 6, 1984. [8408130232]

1221. Memorandum for W. Minners from F. Rowsome, "Candidate Generic Safety Issue: Allowable Outage Times for Diverse, Simultaneous Equipment Outages," May 9, 1985. [8506030097]

1222. NRC Letter to All Licensees Holding Operating Licenses and Construction Permits for Nuclear Power Reactor Facilities, "Individual Plant Examination for Severe Accident Vulnerabilities - 10 CFR § 50.54(f), (Generic Letter No. 88-20)," November 23, 1988 [8811280048], (Supplement 1) August 29, 1989 [8908300001], (Supplement 2) April 4, 1990 [9003300127], (Supplement 3) July 6, 1990 [9007020114], (Supplement 4) June 28, 1991 [9106270324], (Supplement 5) September 8, 1995.

1223. Proceedings of the International Topical Meeting on Probability, Reliability, and Safety Assessment, PSA '89, p.48, "Potential Underestimation of Test and Maintenance Unavailabilities in Probabilistic Risk Assessments," American Nuclear Society, April 2-7, 1989.

1224. Memorandum for B. Morris from F. Gillespie, "Prioritization of GI-117, 'Allowable Outage Times for Diverse Simultaneous Equipment Outages,'" August 4, 1989. [9704100058]

1225. Federal Register Notice 46 FR 58484, "10 CFR Part 50, Interim Requirements Related to Hydrogen Control," December 2, 1981.

1226. Federal Register Notice 50 FR 3498, "10 CFR Part 50, Hydrogen Control Requirements," January 25, 1985.

1227. SECY-89-122, "Resolution of Unresolved Safety Issue (USI) A-48, 'Hydrogen Control Measures and Effects of Hydrogen Burns on Safety Equipment,'" April 19, 1989. [8905010149]

1228. NUREG-0943, "Threaded-Fastener Experience in Nuclear Power Plants," U.S. Nuclear Regulatory Commission, January 1983.

1229. EPRI NP-3784, "A Survey of the Literature on Low-Alloy Steel Fastener Corrosion in PWR Power Plants," Electric Power Research Institute, December 1984.

1230. EPRI RP 2520-7, "Degradation and Failure of Bolting in Nuclear Power Plants," Electric Power Research Institute, June 1987.

1231. EPRI NP-2174, "A Study of Bolting Problems, Tools, and Practices in the Nuclear Industry," Electric Power Research Institute, December 1981.

1232. NUREG-1174, "Evaluation of Systems Interactions in Nuclear Power Plants," U.S. Nuclear Regulatory Commission, May 1989.

1233. NUREG-1229, "Regulatory Analysis for Resolution for USI A-17," U.S. Nuclear Regulatory Commission, August 1989.

1234. SECY-89-230, "Unresolved Safety Issue A-17, 'Systems Interactions in Nuclear Power Plants,'" August 1, 1989. [8908140127]

1235. NRC Letter to All Holders of Operating Licenses or Construction Permits for Nuclear Power Plants, "Resolution of Unresolved Safety Issue A-17, 'Systems Interactions in Nuclear Power Plants' (Generic Letter 89-18)," September 6, 1989. [8909070029]

1236. Federal Register Notice 54 FR 34836, "Issuance and Availability of NUREG-1174, 'Evaluation of Systems Interactions in Nuclear Power Plants: Technical Findings Related to Unresolved Safety Issue A17,' and NUREG-1229, 'Regulatory Analysis for Resolution of USI A-17, - Systems Interactions in Nuclear Power Plants,'" August 22, 1989.

1237. NUREG/CR-5420, "Multiple System Responses Program - Identification of Concerns Related to A Number of Specific Regulatory Issues," U.S. Nuclear Regulatory Commission, October 1989.

1238. NUREG/CR-5437, "Recommendations for Resolution of Public Comments on USI A-40, 'Seismic Design Criteria,'" U.S. Nuclear Regulatory Commission, June 1989.

1239. IE Bulletin No. 79-02, "Pipe Support Base Plate Designs Using Concrete Expansion Anchor Bolts," U.S. Nuclear Regulatory Commission, March 8, 1979 [7903140038], (Rev. 1) June 20, 1979 [7906200183], (Rev. 2) November 8, 1979 [7908220136].

1240. IE Bulletin No. 79-14, "Seismic Analysis for As-Built Safety-Related Piping Systems," U.S. Nuclear Regulatory Commission, July 2, 1979 [7907060295], (Rev. 1) July 18, 1979 [7907250430].

1241. IE Bulletin No. 80-11, "Masonry Wall Design," U.S. Nuclear Regulatory Commission, May 8, 1980. [7912190695]

1242. NUREG/CR-1161, "Recommended Revisions to Nuclear Regulatory Commission Seismic Design Criteria," U.S. Nuclear Regulatory Commission, May 1980.

1243. NUREG/CR-3480, "Value/Impact Assessment for Seismic Design Criteria USI A-40," U.S. Nuclear Regulatory Commission, August 1984.

1244. NUREG-1233, "Regulatory Analysis for USI A-40, 'Seismic Design Criteria,'" U.S. Nuclear Regulatory Commission, September 1989.

1245. SECY-89-296, "Unresolved Safety Issue A-40, 'Seismic Design Criteria,'" September 22, 1989. [8910060116]

1246. Federal Register Notice 54 FR 40220, "Issuance and Availability Final Resolution of Unresolved Safety Issue (USI) A-40; Seismic Design Criteria," September 29, 1989.

1247. NUREG-1217, "Evaluation of Safety Implications of Control Systems in LWR Nuclear Power Plants," U.S. Nuclear Regulatory Commission, June 1989.

1248. NUREG-1218, "Regulatory Analysis for Resolution of USI A-47," U.S. Nuclear Regulatory Commission, July 1989.

1249. SECY-89-255, "Unresolved Safety Issue A-47, 'Safety Implications of Control Systems,'" August 23, 1989. [8908250318]

1250. NRC Letter to All Licensees of Operating Reactors, Applicants for Operating Licenses and Holders of Construction Permits for Light Water Reactor Nuclear Power Plants, "Request for Action Related to Resolution of Unresolved Safety Issue A-47, 'Safety Implication of Control Systems in LWR Nuclear Power Plants' Pursuant to 10 CFR 50.54(f) - Generic Letter 89-19,'" September 20, 1989. [8909200223]

1251. Federal Register Notice 54 FR 36922, "Issuance and Availability of NUREG-1217, 'Evaluation of Safety Implications of Control Systems in LWR Nuclear Power Plants - Technical Findings Related to USI A-47,' and NUREG-1218, 'Regulatory Analysis for Resolution of USI A-47,'" September 5, 1989.

1252. Memorandum for T. King from C. Serpan, "Reevaluation of Issue 15, 'Radiation Effects on Reactor Vessel Supports,'" September 30, 1988. [9704100071]

1253. ORNL/TM-10444, "Evaluation of HFIR Pressure-Vessel Integrity Considering Radiation Embrittlement," Oak Ridge National Laboratory, April 1988.

1254. NUREG/CR-5320, "Impact of Radiation Embrittlement on Integrity of Pressure Vessel Supports for Two PWR Plants," U.S. Nuclear Regulatory Commission, January 1989.

1255. UCLA-ENG-76113, "Some Probabilistic Aspects of the Seismic Risk of Nuclear Reactors," University of California, Los Angeles, December 1976.

1256. SECY-89-180, "Generic Safety Issue 15, 'Radiation Effects on Reactor Vessel Supports,'" June 13, 1989. [8906190110]

1257. NUREG/CR-5210, "Technical Findings Document for Generic Issue 51: Improving the Reliability of Open-Cycle Service-Water Systems," U.S. Nuclear Regulatory Commission, August 1988.

1258. NUREG/CR-5234, "Value/Impact Analysis for Generic Issue 51: Improving the Reliability of Open-Cycle Service-Water Systems," U.S. Nuclear Regulatory Commission, February 1989.

1259. NRC Letter to All Holders of Operating Licenses or Construction Permits for Nuclear Power Plants, "Service Water System Problems Affecting Safety-Related Equipment (Generic Letter 89-13)," July 18, 1989. [8907180211]

1260. Memorandum for J. Taylor from E. Beckjord, "Closeout of GI-51, 'Improving the Reliability of Open-Cycle Service Water Systems,'" August 10, 1989. [9704100044]

1261. Federal Register Notice 54 FR 31268, "'Standard Review Plan for the Review of Safety Analysis Reports for Nuclear Power Plants'; Issuance and Availability Revised SRP Sections 2.4.2 and 2.4.3," July 27, 1989.

1262. NRC Letter to All Licensees of Operating Reactors and Holders of Construction Permits, "Potential for Increased Roof Loads and Plant Area Flood Runoff Depth at Licensed Nuclear Power Plants Due to Recent Change in Probable Maximum Precipitation Criteria Developed by the National Weather Service (Generic Letter 89-22)," October 19, 1989. [8910180273]

1263. Memorandum for J. Taylor from E. Beckjord, "Close-out of Generic Safety Issue No. 103, 'Design for Probable Maximum Precipitation,'" November 28, 1989. [8912180025]

1264. Memorandum for V. Stello from S. Chilk, "Degree Operators: Advance Notice of Rulemaking," January 23, 1986. [8601280245]

1265. Federal Register Notice 54 FR 33639, "Education for Senior Reactor Operators and Shift Supervisors at Nuclear Power Plants; Policy Statement," August 15, 1989.

1266. Federal Register Notice 54 FR 33568, "Education and Experience Requirements for Senior Reactor Operators and Supervisors at Nuclear Power Plants; Withdrawal of Proposed Rulemaking," August 15, 1989.

1267. NUREG-1267, "Technical Resolution of Generic Safety Issue A-29," U.S. Nuclear Regulatory Commission, September 1989.

1268. Memorandum for J. Taylor from E. Beckjord, "Resolution of Generic Safety Issue A-29, 'Nuclear Power Plant Design for Reduction of Vulnerability to Industrial Sabotage,'" October 6, 1989. [8910190129]

1269. NUREG/CR-3453, "Electronic Isolators Used in Safety Systems of U.S. Nuclear Power Plants," U.S. Nuclear Regulatory Commission, March 1986.

1270. Memorandum for B. Morris from B. Sheron, "Proposed Generic Issue on Leakage Through Electrical Isolators," June 23, 1987. [9704100047]

1271. Memorandum for T. Speis from R. Bernero, "Request for Prioritization of Potential Generic Issue Per Office Letter No. 40," August 4, 1985. [8508120299]

1272. Memorandum for R. Mattson from F. Rosa, "Combustion Engineering Standard Technical Specifications (NUREG-0212) - Proposed Revision 3 - Relay Testing," October 8, 1982. [8211030387]

1273. NUREG-0693, "Analysis of Ultimate Heat Sink Cooling Ponds," U.S. Nuclear Regulatory Commission, November 1980.

1274. NUREG-0733, "Analysis of Ultimate Heat-Sink Spray Ponds," U.S. Nuclear Regulatory Commission, August 1981.

1275. NUREG-0858, "Comparison Between Field Data and Ultimate Heat Sink Cooling Pond and Spray Pond Models," U.S. Nuclear Regulatory Commission, September 1982.

1276. Regulatory Guide 1.27, "Ultimate Heat Sink for Nuclear Power Plants," U.S. Nuclear Regulatory Commission, (Rev. 2) January 1976.

1277. NUREG/CR-4120, "Mathematical Modeling of Ultimate Heat Sink Cooling Ponds," U.S. Nuclear Regulatory Commission, March 1985.

1278. "Performance Model for Ultimate Heat Spray Ponds," Journal of Energy Engineering, Vol. 112, No. 2, August 1986.

1279. "Method for Analysis of Ultimate Heat Sink Cooling Tower Performance," University of Illinois at Urbana-Champaign, April 1986. [9704090166]

1280. Memorandum for C. Ader from K. Kniel, "Request for Prioritization of New Generic Safety Issue 'Loss of Essential Service Water in LWRs,'" May 2, 1990. [9704090120]

1281. Memorandum for W. Minners from F. Rowsome, "A New Generic Safety Issue: Accident Management," April 16, 1985. [8505080417]

1282. SECY-88-147, "Integration Plan for Closure of Severe Accident Issues," May 25, 1988. [8806030338]

1283. Memorandum for C. Ader from W. Minners, "GI 116, Accident Management," May 9, 1990. [9704090138]

1284. Memorandum for J. Olshinski from D. Eisenhut, "Control Rod Guide Tube Pin Failures and Peening Damage on Integrity of Steam Generator Tube to Tubesheet Welds and Tube Ends -- North Anna Power Station, Unit No. 1 (NA-1)," December 13, 1982. [8212270164]

1285. EPRI NP-5544, "Nuclear Unit Operating Experience: 1985-1986 Update," Electric Power Research Institute, December 1987.

1286. Memorandum for M. Virgilio from S. Newberry, "Proposed Research Programs to Support SICB Regulation Needs," April 26, 1990. [9005090104]

1287. Memorandum for F. Gillespie, et. al., from T. Speis, "CRGR Combined Packages for the Proposed Resolution of Generic Issue 70, 'Power Operated Relief Valve and Block Valve Reliability,' and Generic Issue 94, 'Additional Low-Temperature Overpressure Protection for Light-Water Reactors,'" December 7, 1988. [9507280258]

1288. SECY-90-232, "Evaluation of the Need for Primary System High Capacity Manual Venting Capability on Combustion Engineering (CE) Plants Without PORVs (GI-84)," June 28, 1990. [9007020274]

1289. Letter to K. Carr from C. Michelson, "Generic Issue - 84, Combustion Engineering Plants Without Power Operated Relief Valves," June 12, 1990. [9006220172]

1290. NRC Letter to All Pressurized Water Reactor Licensees and Construction Permit Holders, "Resolution of Generic Issue 70, 'Power-Operated Relief Valve and Block Valve Reliability,' and Generic Issue 94, 'Additional Low-Temperature Overpressure Protection for Light-Water Reactors,' Pursuant to 10 CFR 50.54(f) (Generic Letter 90-06)," June 25, 1990. [9006200120]

1291. NUREG-1326, "Regulatory Analysis for the Resolution of Generic Issue 94, 'Additional Low-Temperature Overpressure Protection for Light-Water Reactors,'" U.S. Nuclear Regulatory Commission, December 1989.

1292. Memorandum for J. Taylor from E. Beckjord, "Close-out of Generic Issue 70, 'Power-Operated Relief Valve and Block Valve Reliability,' and Generic Issue 94, 'Additional Low-Temperature Overpressure Protection for Light-Water Reactors,'" July 26, 1990. [9507280267]

1293. NUREG-1316, "Technical Findings and Regulatory Analysis Related to Generic Issue 70," U.S. Nuclear Regulatory Commission, December 1989.

1294. Memorandum for F. Gillespie from E. Beckjord, "Resolutions of Generic Issue 70, 'Power Operated Relief Valve and Block Valve Reliability,' and Generic Issue 94, 'Additional Low-Temperature Overpressure Protection for Light-Water Reactors,'" November 16, 1989. [8911290064]

1295. SECY-90-153, "Staff Conclusions Relative to the Classification of PORVs as Safety Grade," April 27, 1990. [9005030123]

1296. Information Notice No. 90-19, "Potential Loss of Effective Volume for Containment Recirculation Spray at PWR Facilities," U.S. Nuclear Regulatory Commission, March 14, 1990. [9003080213]

1297. IE Bulletin No. 83-01, "Failure of Reactor Trip Breakers (Westinghouse DB-50) to Open on Automatic Trip Signal," U.S. Nuclear Regulatory Commission, February 25, 1983. [8212060367]

1298. IE Bulletin No. 83-04, "Failure of the Undervoltage Trip Function of Reactor Trip Breakers," U.S. Nuclear Regulatory Commission, March 11, 1983. [8212060380]

1299. IE Bulletin No. 83-08, "Electrical Circuit Breakers With an Undervoltage Trip Feature in Use in Safety-Related Applications Other that the Reactor Trip System," U.S. Nuclear Regulatory Commission, December 28, 1983. [8312120090]

1300. Memorandum for J. Taylor from E. Beckjord, "Resolution of Generic Safety Issue 75, 'Generic Implications of Salem ATWS - QA,'" May 18, 1990. [9507280290]

1301. Memorandum for W. Dircks from R. Minogue, "Preliminary Survey of Requirements and Guidance by Functional Areas for Operating Nuclear Power Plants, Dated February 1984," August 21, 1984. [8409110305]

1302. Memorandum for E. Beckjord from W. Minners, "Generic Issue 131, 'Potential Seismic Interaction Involving the Movable In-Core Flux Mapping System Used in Westinghouse Plants,'" July 18, 1990. [9007240192]

1303. NRC Letter to All Power Reactor Licensees and Applicants, "Relaxation of Staff Position in Generic Letter 83-28, Item 2.2 Part 2, 'Vendor Interface for Safety-Related Components' (Generic Letter No. 90-03)," March 20, 1990. [9003140089]

1304. IE Bulletin No. 77-02, "Potential Failure Mechanism in Certain Westinghouse (W) AR Relays With Latch Attachments," U.S. Nuclear Regulatory Commission, September 12, 1977. [7909050215]

1305. IE Bulletin No. 79-09, "Failures of GE Type AK-2 Circuit Breaker in Safety Related Systems," U.S. Nuclear Regulatory Commission, April 17, 1979. [7905010083]

1306. IE Circular No. 81-12, "Inadequate Periodic Test Procedure of PWR Protection System," U.S. Nuclear Regulatory Commission, July 22, 1981. [8103300406]

1307. NUREG-1372, "Regulatory Analysis for the Resolution of Generic Issue C-8: 'Main Steam Isolation Valve Leakage and LCS Failure,'" U.S. Nuclear Regulatory Commission, June 1990.

1308. NUREG-1169, "Resolution of Generic Issue C-8," U.S. Nuclear Regulatory Commission, August 1986.

1309. NUREG/CR-5397, "Value-Impact Analysis of Regulatory Options for Resolution of Generic Issue C-8: MSIV Leakage and LCS Failure," U.S. Nuclear Regulatory Commission, May 1990.

1310. Memorandum for J. Taylor from E. Beckjord, "Resolution of Generic Safety Issue C-8," March 15, 1990. [9507280304]

1311. IE Information Notice No. 82-09, "Cracking in Piping of Makeup Coolant Lines at B&W Plants," U.S. Nuclear Regulatory Commission, March 31, 1982. [8202040131]

1312. IE Information No. 82-30, "Loss of Thermal Sleeves in Reactor Coolant System Piping at Certain Westinghouse PWR Power Plants," U.S. Nuclear Regulatory Commission, July 26, 1982. [8204210403]

1313. SECY-82-186, "Status of Make-up Nozzle Cracking in Babcock & Wilcox (B&W) Plants," May 7, 1982. [8205280495]

1314. Letter to R. Gridley (General Electric Company) from D. Eisenhut, "Safety Evaluation for the General Electric Topical Report NEDE-218121-02, 'BWR Feedwater Nozzle/Sparger Final Report, Supplement 2,'" January 14, 1980. [8002070141]

1315. Memorandum for D. Sternberg from R. Clark, "Degradation of Thermal Sleeves - Trojan Nuclear Plant," August 11, 1982. [8208250478]

1316. Memorandum for T. Novak, et al., from J. Knight, "Evaluation of Thermal Sleeve Problems in Westinghouse Plants," October 28, 1983. [8311140192]

1317. Letter to V. Stello from W. Kerr, "ACRS Comments on Nuclear Power Plant Air Cooling Systems," October 15, 1987. [8710210001]

1318. NUREG/CR-4550, "Analysis of Core Damage Frequency from Internal Events," U.S. Nuclear Regulatory Commission, (Vol. 1, Rev. 1) January 1990, (Vol. 2) April 1989, (Vol. 3, Rev. 1) April 1990, (Vol. 4, Rev. 1) August 1989, (Vol. 5, Rev. 1) April 1990, (Vol. 6) April 1987, (Vol. 7, Rev. 1) May 1990.

1319. NRC Information Notice 92-18, "Potential for Loss of Remote Shutdown Capability During a Control Room Fire," U.S. Nuclear Regulatory Commission, February 28, 1992. [9202240025]

1320. SECY-89-170, "Fire Risk Scoping Study: Summary of Results and Proposed Staff Actions," June 7, 1989. [8906260024]

1321. NRC Information Notice 91-53, "Failure of Remote Shutdown System Instrumentation Because of Incorrectly Installed Components," U.S. Nuclear Regulatory Commission, September 4, 1991. [9108280089]

1322. IE Information Notice 87-12, "Potential Problems with Metal Clad Circuit Breakers, General Electric Type AKF-2-25," U.S. Nuclear Regulatory Commission, February 13, 1987. [8702110132]

1323. Memorandum for W. Minners, et al., from F. Rowsome, "Generic Issue 123, 'Deficiencies in the Regulations Suggested by the Davis-Besse Incident,'" November 21, 1985. [8512100189]

1324. ANSI/IEEE-ANS-7-4.3.2-1982, "Application Criteria for Programmable Digital Computer Systems in Safety Systems of Nuclear Power Generating Stations," American Nuclear Society, July 6, 1982.

1325. Regulatory Guide 1.152, "Criteria for Programmable Digital Computer System Software in Safety-Related Systems of Nuclear Power Plants," U.S. Nuclear Regulatory Commission, November 1985. [8511220286]

1326. NUREG-1289, "Regulatory and Backfit Analysis: Unresolved Safety Issue A-45, Shutdown Decay Heat Removal Requirements," U.S. Nuclear Regulatory Commission, November 1988.

1327. NUREG/CR-4639, "Nuclear Computerized Library for Assessing Reactor Reliability (NUCLARR)," U.S. Nuclear Regulatory Commission, (Vol. 1) February 1988, (Vol. 2) September 1988, (Vol. 3) November 1988, (Vol. 4) June 1988, (Vol. 5) June 1988.

1328. AEOD/E804, "Reliability of Non-Safety Related Field Breakers During ATWS Events," Office for Analysis and Evaluation of Operational Data, U.S. Nuclear Regulatory Commission, July 26, 1988. [8905020208]

1329. Memorandum for T. King from K. Kniel, "Request for Prioritization of New Generic Safety Issue 'Reliability of Recirculation Pump Trip (RPT) During an ATWS,'" March 17, 1989. [9507280112]

1330. Memorandum for T. King from W. Minners, "Overpressurization of Containment Penetrations," March 16, 1989. [9507280122]

1331. NUREG/CR-4220, "Reliability Analysis of Containment Isolation Systems," U.S. Nuclear Regulatory Commission, June 1985.

1332. NUREG-0797, "Safety Evaluation Report Related to the Operation of Comanche Peak Steam Electric Station, Units 1 and 2," U.S. Nuclear Regulatory Commission, (Supplement 9) March 1985.

1333. NSAC-148, "Service Water Systems and Nuclear Plant Safety," Electric Power Research Institute, May 1990.

1334. NUREG/CR-2797, "Evaluation of Events Involving Service Water Systems in Nuclear Power Plants," U.S. Nuclear Regulatory Commission, November 1982.

1335. Memorandum for W. Minners from F. Rowsome, "A Candidate Generic Safety Issue," December 11, 1984. [8501090105]

1336. Memorandum for B. Morris from L. Shao, "Resolution of Generic Issue 119.2," July 16, 1990. [9507280130]

1337. Memorandum for J. Taylor from E. Beckjord, "Proposed Resolution and Closeout of Generic Issue 135, 'Steam Generator and Steam Line Overfill Issues,'" March 29, 1991. [9507280149]

1338. RES Office Letter No. 7, "Procedures for Identification, Prioritization, Resolution, and Tracking of Generic Issues," February 16, 1996. [9608070117]

1339. Memorandum for All RES Employees from E. Beckjord, "Withdrawal of RES Office Letter No. 3, 'Procedure and Guidance for the Resolution of Generic Issues,'" June 2, 1994. [9704100042]

1340. Federal Register Notice 51 FR 12502, "10 CFR Part 50, Modification of General Design Criterion 4 Requirements for Protection Against Dynamic Effects of Postulated Pipe Ruptures," April 11, 1986.

1341. Federal Register Notice 51 FR 26393, "10 CFR Part 50, Modification of General Design Criterion 4 Requirements for Protection Against Dynamic Effects of Postulated Pipe Ruptures," July 23, 1986.

1342. Federal Register Notice 52 FR 41288, "10 CFR Part 50, Modification of General Design Criterion 4 Requirements for Protection Against Dynamic Effects of Postulated Pipe Ruptures," October 27, 1987.

1343. Federal Register Notice 53 FR 1968, "Standard Review Plan Revision," January 25, 1988.

1344. Federal Register Notice 52 FR 23376, "Standard Review Plan Issuance," June 19, 1987.

1345. NRC Letter to All Operating Licensees, Construction Permit Holders and Applicants for Construction Permits, "Relaxation in Arbitrary Intermediate Pipe Rupture Requirements (Generic Letter 87-11)," June 19, 1987. [8706230486]

1346. Memorandum for Distribution from G. Arlotto, "Termination of Proposed Revision to SRP 3.9.3," October 2, 1986. [8811180136]

1347. Regulatory Guide 1.84, "Design and Fabrication Code Case Acceptability -- ASME III, Division 1," U.S. Nuclear Regulatory Commission, (Rev. 30) October 31, 1994. [9411040236]

1348. Regulatory Guide 1.61, "Damping Values for Seismic Design of Nuclear Power Plants," U.S. Nuclear Regulatory Commission, October 1973. [7907100231]

1349. Memorandum for J. Roe from J. Wermiel, "Closure of Generic Issue No. 133, 'Update Policy on Nuclear Plant Staff Working Hours,'" July 10, 1991. [9107230263]

1350. NRC Information Notice No. 91-36, "Nuclear Plant Staff Working Hours," June 10, 1991. [9106040339]

1351. SECY-90-343, "Status of the Staff Program to Determine How the Lessons Learned from the Systematic Evaluation Program Have Been Factored into the Licensing Bases of Operating Plants," October 4, 1990. [9010150030]

1352. Memorandum for J. Knight, et al., from H. Thompson, "Action Plan for Resolving Failure of Tendon Anchorage at Farley 2 and for Determining Need for Immediate Licensing Action on Other Facilities," June 25, 1985. [8507030479]

1353. NUREG/CR-4712, "Regulatory Analysis of Regulatory Guide 1.35 (Revision 3, Draft 2) - In-Service Inspection of Ungrouted Tendons in Prestressed Concrete Containments," U.S. Nuclear Regulatory Commission, February 1987.

1354. NUREG-1407, "Procedural and Submittal Guidance for the Individual Plant Examination of External Events (IPEEE) for Severe Accident Vulnerabilities," U.S. Nuclear Regulatory Commission, June 1991.

1355. NRC Letter to All Licensees of Operating Pressurized Water Nuclear Power Reactors and Applicants for Operating Licenses (Except for St. Lucie, Unit No. 1), "Natural Circulation Cooldown (Generic Letter No. 81-21)," May 5, 1981. [8105140267]

1356. NRC Letter to All Operating Pressurized Water Reactors (PWR's) (Generic Letter 80-53), June 11, 1980. [8007230099]

1357. ANSI/ANS 2.3, "Estimating Tornado and Extreme Wind Characteristics at Nuclear Power Sites," American National Standards Institute, Inc., October 17, 1983.

1358. Memorandum for H. Thompson from G. Arlotto, "RES Input - Action Plan for Resolving Failure of Tendon Anchorage at Farley-2 and for Determining Need for Immediate Licensing Action on Other Facilities," July 31, 1985. [9312220342]

1359. Memorandum for T. Speis and E. Jordan from J. Knight, "Tendon Anchor Head Failure - Needed Licensing Action at Other Facilities," December 6, 1985. [8512240278]

1360. Regulatory Guide 1.35.1, "Determining Prestressing Forces for Inspection of Prestressed Concrete Containments," U.S. Nuclear Regulatory Commission, July 1990. [9503290310]

1361. Memorandum for E. Jordan from E. Beckjord, "CRGR Review of: 1. Regulatory Guide 1.35, Rev. 3, 'Inservice Inspection of Ungrouted Tendons in Prestressed Concrete Containments,' 2. Regulatory Guide 1.35.1, 'Determining Prestressing Forces for Inspection of Prestressed Concrete Containments,'" July 28, 1989. [8908100273]

1362. Memorandum for E. Beckjord from F. Gillespie, "Generic Concerns Arising from TMI-2 Cleanup," February 21, 1991. [9103010101]

1363. Memorandum for E. Beckjord from F. Gillespie, "Request for Generic Rulemaking Concerning Decommissioning Issues," January 7, 1992. [9201150209]

1364. Federal Register Notice 53 FR 24018, "10 CFR Parts 30, 40, 50, 51, 70, and 72, General Requirements for Decommissioning Nuclear Facilities," June 27, 1988.

1365. Memorandum for Z. Rosztoczy from S. Bajwa, "Generic Issue 148: Smoke Control and Manual Fire Fighting Effectiveness; Generic Issue 149: Adequacy of Fire Barriers," April 3, 1991. [9104080111]

1366. NUREG-1286, "Safety Evaluation Report Related to the Restart of Rancho Seco Nuclear Generating Station, Unit 1 Following the Event of December 26, 1985," U.S. Nuclear Regulatory Commission, October 1987.

1367. Memorandum for W. Russell from A. Thadani, "Task Action Plan for Resolution of Service Water System Problems," June 27, 1991. [9107120290]

1368. NRC Letter to Licensees and Applicants of the Following Pressurized-Water Reactor Nuclear Power Plants: 1. Braidwood Units 1 and 2; 2. Byron Units 1 and 2; 3. Catawba Units 1 and 2; 4. Comanche Peak Units 1 and 2; 5. Cook Units 1 and 2; 6. Diablo Canyon Units 1 and 2; 7. McGuire Units 1 and 2, "Request for Information Related to the Resolution of Generic Issue 130, 'Essential Service Water System Failures at Multi-Unit Sites,' Pursuant to 10 CFR 50.54(f) - Generic Letter 91-13," September 19, 1991. [9109160253]

1369. NUREG-1269, "Loss of Residual Heat Removal System, Diablo Canyon Unit 2, April 10, 1987," U.S. Nuclear Regulatory Commission, June 1987.

1370. SECY-91-283, "Evaluation of Shutdown and Low Power Risk Issues," September 9, 1991. [9109120134]

1371. NUREG/CR-4960, "Control Room Habitability Survey of Licensed Commercial Nuclear Power Generating Stations," U.S. Nuclear Regulatory Commission, October 1988.

1372. Regulatory Guide 4.7, "General Site Suitability Criteria for Nuclear Power Stations," U.S. Nuclear Regulatory Commission, September 1974, (Rev. 1) November 1975. [7907200072]

1373. Regulatory Guide 1.78, "Assumptions for Evaluating the Habitability of a Nuclear Power Plant Control Room During a Postulated Hazardous Chemical Release," U.S. Nuclear Regulatory Commission, June 1974. [8001240567]

1374. Regulatory Guide 1.91, "Evaluations of Explosions Postulated to Occur on Transportation Routes Near Nuclear Power Plants," U. S. Nuclear Regulatory Commission, January 1975, (Rev. 1) February 1978 [8808230010].

1375. Regulatory Guide 1.95, "Protection of Nuclear Power Plant Control Room Operators Against an Accidental Chlorine Release," U.S. Nuclear Regulatory Commission, February 1975, (Rev. 1) January 1977 [8001240569].

1376. Letter to D. Solberg (NRC) from T. Charlton (INEL), "Transmittal of Letter Report on Turbine Trip Failure Events - TRC-28-88," April 27, 1988. [9502070128]

1377. Memorandum for R. Baer from C. Hrabal, "Prioritization of GI-144, 'SCRAM Without a Turbine/Generator Trip,'" September 24, 1991. [9312220339]

1378. Memorandum for T. King from K. Kniel, "Request for Prioritization of New Generic Safety Issue 'SCRAM Without a Turbine/Generator Trip,'" March 22, 1988. [9312220315]

1379. NUREG/CR-5653, "Recriticality in a BWR Following a Core Damage Event," U.S. Nuclear Regulatory Commission, November 1990.

1380. Memorandum for W. Minners from B. Sheron, "Request for Prioritization of Potential Generic Issues," September 4, 1984. [8409170085]

1381. Memorandum for W. Minners from B. Sheron, "Update of Generic Issue Management Control System (GIMCS)," July 5, 1991. [9312220300]

1382. NUREG-1365, "Revised Severe Accident Research Program Plan," U.S. Nuclear Regulatory Commission, August 1989, (Rev. 1) December 1992.

1383. Memorandum for R. Baer from S. Diab, "Supporting Analyses for Prioritization of Issue 110, 'Equipment Protective Devices on Engineered Safety Features,'" April 16, 1992. [9312220226]

1384. Memorandum for W. Dircks for R. Fraley, "Bolt Failures in Nuclear Power Plants," October 20, 1981. [8201200698]

1385. NRC Letter to All Holders of Operating Licenses or Construction Permits for Nuclear Power Plants, "Generic Safety Issue 29, 'Bolting Degradation or Failure in Nuclear Power Plants,' (Generic Letter 91-17)," October 17, 1991. [9110150302]

1386. NRC Letter to All Licensees of Operating PWRs and Holders of Construction Permits for PWRs, "Boric Acid Corrosion of Carbon Steel Reactor Pressure Boundary Components in PWR Plants (Generic Letter 88-05)," March 17, 1988. [8803220364]

1387. NRC Letter to All Licensees, Applicants and Holders of Operating Licenses Not Required to be Reviewed for Seismic Adequacy of Equipment Under the Provisions of USI A-46, 'Seismic Qualification of Equipment in Operating Plants,' "Verification of Seismic Adequacy of Mechanical and Electrical Equipment in Operating Reactors, Unresolved Safety Issue (USI) A-46 (Generic Letter 87-03)," February 27, 1987. [8703060307]

1388. NRC Bulletin No. 89-02, "Stress Corrosion Cracking of High-Hardness Type 410 Stainless Steel Internal Preloaded Bolting in Anchor Darling Model S350W Swing Check Valves or Valves of Similar Design," U.S. Nuclear Regulatory Commission, July 19, 1989. [8907110441]

1389. NRC Compliance Bulletin No. 87-02, "Fastener Testing to Determine Conformance with Applicable Material Specifications," U.S. Nuclear Regulatory Commission, November 6, 1987 [8711050040], (Supplement 1) April 22, 1988 [8804180142], (Supplement 2) June 10, 1988 [8806090301].

1390. NRC Information Notice No. 89-22, "Questionable Certification of Fasteners," U.S. Nuclear Regulatory Commission, March 3, 1989. [8902270158]

1391. NRC Information Notice No. 89-56, "Questionable Certification of Material Supplied to the Defense Department by Nuclear Suppliers," U.S. Nuclear Regulatory Commission, July 20, 1889 [8907140274], (Supplement 1) November 22, 1989 [8911160058], (Supplement 2) July 19, 1991 [9107120259].

1392. NRC Information Notice No. 89-70, "Possible Indications of Misrepresented Vendor Products," U.S. Nuclear Regulatory Commission, October 11, 1989 [8910040381], (Supplement 1) April 26, 1990 [9004200525].

1393. IE Information Notice No. 86-25, "Traceability and Material Control of Material and Equipment, Particularly Fasteners," U.S. Nuclear Regulatory Commission, April 11, 1986. [8604090451]

1394. Memorandum for J. Taylor from E. Beckjord, "Resolution of Generic Safety Issue 29, 'Bolting Degradation or Failure in Nuclear Power Plants,'" October 25, 1991. [9312220296]

1395. NUREG-1339, "Resolution of Generic Safety Issue 29: Bolting Degradation or Failure in Nuclear Power Plants," U.S. Nuclear Regulatory Commission, June 1990.

1396. Federal Register Notice 56 FR 36081, "10 CFR Parts 21 and 50, Criteria and Procedures for the Reporting of Defects and Conditions of Construction Permits," July 31, 1991.

1397. SECY-91-150, "Proposed Amendments to 10 CFR Part 21, 'Reporting of Defects and Noncompliance' and 10 CFR 50.55(e), 'Conditions of Construction Permits,'" May 22, 1991. [9106040262]

1398. NUREG-1445, "Regulatory Analysis for the Resolution of Generic Safety Issue-29: Bolting Degradation or Failure in Nuclear Power Plants," U.S. Nuclear Regulatory Commission, September 1991.

1399. NRC Letter to All Holders of Operating Licenses, "Resolution of Generic Issue A-30, 'Adequacy of Safety-Related DC Power Supplies,' Pursuant to 10 CFR 50.54(f) (Generic Letter 91-06)," April 29, 1991. [9104170256]

1400. NRC Letter to All Holders of Operating Licenses, "Resolution of Generic Issues 48, 'LCOs for Class 1E Vital Instrument Buses,' and 49, 'Interlocks and LCOs for Class 1E Tie Breakers' Pursuant to 10 CFR 50.54(f) (Generic Letter 91-11)," July 18, 1991. [9107160296]

1401. NUREG/CR-5414, "Technical Findings for Proposed Integrated Resolution of Generic Issue 128, Electric Power Reliability," U.S. Nuclear Regulatory Commission, November 1989.

1402. Memorandum for J. Taylor from E. Beckjord, "Resolution of GI-128, Electrical Power Reliability,'" September 12, 1991. [9312220229]

1403. NUREG/CR-5406, "BWR Reactor Water Cleanup System Flexible Wedge Gate Isolation Valve Qualification and High Energy Flow Interruption Test," U.S. Nuclear Regulatory Commission, (Vol. 1) October 1989, (Vol. 2) October 1989, (Vol. 3) October 1989.

1404. NUREG/CR-5558, "Generic Issue 87: Flexible Wedge Gate Valve Test Program," U.S. Nuclear Regulatory Commission, January 1991.

1405. SECY-82-1B, "Proposed Commission Policy Statement on Severe Accidents and Related Views on Nuclear Reactor Regulation," November 24, 1982. [8301120513]

1406. Memorandum for J. Taylor from E. Beckjord, "Technical Resolution of Generic Issue 87, 'Failure of HPCI Steam Line Without Isolation,'" December 9, 1991. [9312220344]

1407. NUREG/CR-4681, "Enclosure Environment Characterization Testing for the Base Line Validation of Computer Fire Simulation Codes," U.S. Nuclear Regulatory Commission, March 1987.

1408. NUREG/CR-5526, "Analysis of Risk Reduction Measures Applied to Shared Essential Service Water Systems at Multi-Unit Sites," U.S. Nuclear Regulatory Commission, June 1991.

1409. NUREG-1421, "Regulatory Analysis for the Resolution of Generic Issue 130: Essential Service Water System Failures at Multi-Unit Sites," U.S. Nuclear Regulatory Commission, June 1991.

1410. Memorandum for J. Taylor from E. Beckjord, "Resolution of Generic Issue 130, 'Essential Service Water System Failures at Multi-Unit Sites,'" September 23, 1991. [9312220347]

1411. NUREG/CR-4893, "Technical Findings Report for Generic Issue 135, Steam Generator and Steam Line Overfill Issues," U.S. Nuclear Regulatory Commission, May 1991.

1412. Memorandum for J. Taylor, et al., form S. Chilk "SECY-91-132 - Evaluation of the Feasibility of Initiating a Consensus Process to Address Issues Related to the Below Regulatory Concern Policy," June 28, 1991. [9109060094]

1413. SECY-92-045, "Enhanced Participatory Rulemaking Process," February 7, 1992. [9202130092]

1414. Memorandum for K. Kniel from G. Lainas, "Proposed Generic Issue Deinerting Upon Discovery of Reactor Coolant System Leakage," August 1, 1986. [8608110015]

1415. Letter to D. Basdekas (NRC) from J. Lambright (SNL), "Generic Issue 148, 'Smoke Control and Manual Fire Fighting Effectiveness,'" March 4, 1992. [9502070165]

1416. Memorandum for B. Morris from W. Minners, "Prioritization of Proposed New Generic Issue," December 4, 1989. [9312220350]

1417. NUREG/CR-5856 "Identification and Evaluation of PWR In-Vessel Severe Accident Management Strategies," U.S. Nuclear Regulatory Commission, March 1992.

1418. Memorandum for T. Murley from E. Beckjord, "A New Generic Issue: Multiple Steam Generator Tube Leakage," June 16, 1992. [9212040356]

1419. Memorandum for C. Serpan from J. Muscara, "Steam Generator Tube Inspection, Integrity and Plugging Issues," March 16, 1992. [9212040327]

1420. Letter to J. Cross (Portland General Electric Company) from L. Kokajko (NRC), "Issuance of Amendment for Trojan Nuclear Plant (TAC No. M82287)," February 5, 1992. [9202130137]

1421. Letter to the NRC from J. Cross (Portland General Electric Company), "Request for Additional Information Regarding Trojan Steam Generator Tube Structural Integrity Report

and License Change Application (LCA) 219 Dated January 3, 1992 (TAC No. M82287)," January 16, 1992. [9201220023]

1422. NUREG/CR-0718, "Steam Generator Tube Integrity Program Phase I Report," U.S. Nuclear Regulatory Commission, September 1979.

1423. NUREG-1350, "Nuclear Regulatory Commission Information Digest," U.S. Nuclear Regulatory Commission, (Vol. 4) March 1992, (Vol. 7) March 1995.

1424. EGG-PE-6670, "Generic Cost Analysis for Steam Generator Repairs and Replacement," Idaho National Engineering Laboratory, August 1984.

1425. SECY-91-270, "Interim Guidance on Staff Implementation of the Commission's Safety Goal Policy," August 27, 1991. [9109030213]

1426. Memorandum for R. Emrit from G. Burdick, "Multiple Steam Generator Tube Leakage," October 30, 1992. [9502070227]

1427. SECY-92-292, "Advance Notice of Proposed Rulemaking on Severe Accident Plant Performance Criteria for Future LWRs," August 21, 1992. [9208250010]

1428. NUREG/CR-4470, "Survey and Evaluation of Vital Instrumentation and Control Power Supply Events," U.S. Nuclear Regulatory Commission, August 1986.

1429. NUREG-1455, "Transformer Failure and Common-Mode Loss of Instrument Power at Nine Mile Point Unit 2 on August 13, 1991," U.S. Nuclear Regulatory Commission, October 1991.

1430. Memorandum for T. Martin et al., from T. Murley, "Preliminary Results from Individual Plant Examinations (IPE)," April 22, 1991. [9105020194]

1431. NRC Letter to All Holders of Operating Licenses or Construction Permits for Pressurized Water Reactors (PWRs), "Resolution of Generic Issue 79, 'Unanalyzed Reactor Vessel (PWR) Thermal Stress During Natural Convection Cooldown' (Generic Letter 92-02)," March 6, 1992. [9203030209]

1432. Memorandum for J. Taylor from E. Beckjord, "Resolution of Generic Issue 79, 'Unanalyzed Reactor Vessel (PWR) Thermal Stress During Natural Convection Cooldown,'" May 4, 1992. [9312220157]

1433. Memorandum for C. Heltemes from F. Gillespie, "Generic Issue 163, 'Multiple Steam Generator Tube Leakage,'" November 24, 1992. [9212040320]

1434. Memorandum for E. Beckjord from L. Shao, "Interim Plugging Criteria for Trojan Nuclear Plant," December 9, 1992. [9212140066]

1435. Memorandum for F. Gillespie from C. Heltemes, "GI-163, 'Multiple Steam Generator Tube Leakage,'" September 28, 1992. [9212040379]

1436. Federal Register Notice 51 FR 27817, "10 CFR Parts 50 and 73, Miscellaneous Amendments Concerning Physical Protection of Nuclear Power Plants," August 4, 1986.

1437. NRC Letter to All Power Reactor Licensees, "Implementation of 10 CFR 73.55 Miscellaneous Amendments and Search Requirements (Generic Letter 87-08)," May 11, 1987. [8705110372]

1438. Regulatory Guide 5.65, "Vital Area Access Controls, Protection of Physical Security Equipment, and Key and Lock Controls," U.S. Nuclear Regulatory Commission, September 1986. [8610030129]

1439. Memorandum for J. Taylor from E. Beckjord, "Resolution of Generic Issue 151 'Reliability of ATWS Recirculation Pump Trip in BWRs,'" September 29, 1992. [9312220159]

1440. NUREG/CR-2336, "Steam Generator Tube Integrity Program," U.S. Nuclear Regulatory Commission, August 1988.

1441. Memorandum for T. Murley from E. Beckjord, "Interim Plugging Criteria for Trojan Nuclear Plant," January 5, 1993. [9301110331]

1442. Memorandum for T. Murley from E. Beckjord, "Interim Plugging Criteria for Trojan Nuclear Plant," January 15, 1993. [9301250251]

1443. SECY-90-160, "Proposed Rule on Nuclear Power Plant License Renewal," May 3, 1990. [9005080305]

1444. NUREG-1412, "Foundation for the Adequacy of the Licensing Bases," U.S. Nuclear Regulatory Commission, December 1991.

1445. NUREG/CR-6010, "History and Current Status of Generation 3 Thermal Sleeves in Westinghouse Nuclear Power Plants," U.S. Nuclear Regulatory Commission, July 1992.

1446. Memorandum for J. Taylor from E. Beckjord, "Technical Resolution of Generic Issue 73, 'Detached Thermal Sleeves,'" September 2, 1992. [9210070203]

1447. Memorandum for D. Eisenhut, et al., from R. Vollmer, "Evaluation of Allegations Regarding Class 1 Piping Design Deficiencies (TAC #49242)," September 1, 1983. [8309210477]

1448. IE Information Notice No. 83-80, "Use of Specialized 'Stiff' Pipe Clamps," November 23, 1983. [8311010020]

1449. NUREG/CR-2405, "Subsystem Fragility - Seismic Safety Margins Research Program (Phase 1)," U.S. Nuclear Regulatory Commission, February 1982.

1450. Memorandum for J. Taylor from E. Beckjord, "Resolution of Generic Issue 113, 'Dynamic Qualification and Testing of Large Bore Hydraulic Snubbers,'" August 27, 1992. [9312220197]

1451. Memorandum for J. Taylor from E. Beckjord, "Resolution of Generic Issue (GI) 121, 'Hydrogen Control for PWR Dry Containments,'" March 24, 1992. [9312220194]

1452. Memorandum for W. Minners from F. Gillespie, "Prioritization of Generic Issue 78, 'Monitoring of Design Basis Transient Fatigue Limits for Reactor Coolant System,'" June 10, 1992. [9312220188]

1453. NRC Information Notice 92-06, "Reliability of ATWS Mitigation System and Other NRC Required Equipment Not Controlled by Plant Technical Specifications," January 15, 1992 [9201080305], (Supplement 1) July 1, 1993 [9306250303].

1454. Memorandum for W. Minners from B. Sheron, "Proposed Generic Issue 'RHR Pumps Inside Containment,'" August 23, 1985. [8508290373]

1455. NUREG/CR-5300, "Integrated Reliability and Risk Analysis System (IRRAS) Version 2.5," U.S. Nuclear Regulatory Commission, (Vol. 1) March 1991.

1456. NUREG/CR-5303, "System Analysis and Risk Assessment System (SARA) Version 4.0," U.S. Nuclear Regulatory Commission, (Vol. 1) February 1992, (Vol. 2) January 1992.

1457. Letter to C. Rourk (NRC) from N. Anderson (INEL), "Transmittal of Final Report, 'Analysis of Plant Specific Responses for the Resolution of Generic Issue A-30, Adequacy of Safety-Related DC Power Supplies,' (FIN D6025) NRA-20-92," July 9, 1992. [9502070242]

1458. SECY-87-297, "MARK I Containment Performance Program Plan," December 8, 1987. [8803080354]

1459. SECY-89-017, "MARK I Containment Performance Improvement Program," January 23, 1989. [8903090205]

1460. Memorandum for V. Stello from S. Chilk, "SECY-89-017 - MARK I Containment Performance Improvement Program," July 11, 1989. [8907270013]

1461. SECY-91-316, "Status of Severe Accident Research," October 7, 1991. [9110160271]

1462. Letter to D. Grace (BWR Owners Group) from A. Thadani (NRC), "Safety Evaluation of 'BWR Owners' Group - Emergency Procedure Guidelines, Revision 4,' NEDO-31331, March 1987," September 12, 1988. [8809190198]

1463. NRC Letter to All Holders of Operating Licenses for Nuclear Power Reactors With Mark I Containments, "Installation of a Hardened Wetwell Vent (Generic Letter No. 89-16)," September 1, 1989. [8909010375]

1464. NUREG/CR-5662, "Hydrogen Combustion, Control, and Value-Impact Analysis for PWR Dry Containments," U.S. Nuclear Regulatory Commission, June 1991.

1465. NUREG-1465, "Accident Source Terms for Light-Water Nuclear Power Plants," U.S. Nuclear Regulatory Commission, February 1995.

1466. NUREG/CR-5460, "A Cause-Defense Approach to the Understanding and Analysis of Common Cause Failures," U.S. Nuclear Regulatory Commission, March 1990.

1467. Federal Register Notice 56 FR 31306, "10 CFR 50, RIN 3150-AD00, Monitoring the Effectiveness of Maintenance at Nuclear Power Plants," July 10, 1991.

1468. Memorandum for E. Beckjord from F. Gillespie, "Potential Generic Issue - Adequacy of Emergency and Essential Lighting - (RES Office Letter No. 1, Rev. 1)," September 14, 1990. [9009210192]

1469. NUREG/CR-4834, "Recovery Actions in PRA for the Risk Methods Integration and Evaluation Program (RMIEP)," U.S. Nuclear Regulatory Commission, (Vol. 1) June 1987.

1470. NUREG/CR-4674, "Precursors to Potential Severe Core Damage Accidents," U.S. Nuclear Regulatory Commission, (Vols. 15 and 16) September 1992.

1471. NRC Information Notice No. 90-69, "Adequacy of Emergency and Essential Lighting," U.S. Nuclear Regulatory Commission, October 31, 1990. [9010250054]

1472. NUREG-1272, "Office for Analysis and Evaluation of Operational Data 1991 Annual Report," U.S. Nuclear Regulatory Commission, (Vol. 6, No. 1) August 1992.

1473. Memorandum for J. Taylor from S. Chilk, "SECY-89-102 - Implementation of the Safety Goals," June 15, 1990. [9007090094]

1474. Letter to W. Conway (Arizona Public Service Company) from C. Trammell (NRC), "Review of Eddy-Current Inspections of Steam Generator Tubes - Palo Verde Nuclear Generating Station, Unit No. 2 (TAC No. M86178)," June 8, 1993. [9306100267]

1475. NUREG-1477, "Voltage-Based Interim Plugging Criteria for Steam Generator Tubes," U.S. Nuclear Regulatory Commission, (Draft) June 1993.

1476. Memorandum for T. Murley from E. Beckjord, "Recommendations Regarding Revision of Standard Review Plan Sections Related to 'Stiff Pipe Clamps,'" August 12, 1992. [9312220199]

1477. Memorandum for T. Speis from F. Gillespie, "Consideration of New Generic Issue on `Support Flexibility of Equipment and Components,'" January 30, 1989. [8903010215]

1478. NUREG/CR-2999, "Final Report USNRC Anchor Bolt Study: Data Survey and Dynamic Testing," U.S. Nuclear Regulatory Commission, December 1982.

1479. SECY-93-108, "Revised Guidelines for Prioritization of Generic Safety Issues," April 28, 1993. [9308230261]

1480. EPRI NP-6154, "Proceedings: EPRI/NRC/TPC Workshop on Seismic Soil-Structure Interaction Analysis Techniques Using Data From Lotung, Taiwan," Electric Power Research Institute, (Vol. 1) March 1989, (Vol. 2) March 1989.

1481. Memorandum for E. Beckjord from T. Murley, "Potential New Generic Issues," September 25, 1991. [9110250132]

1482. Memorandum for T. Murley from E. Beckjord, "Prioritization of Generic Issue 161, 'Associated Circuits,'" March 12, 1993. [9312220201]

1483. Regulatory Guide 1.9, "Selection, Design, and Qualification of Diesel-Generator Units Used as Standby (Onsite) Electric Power Systems at Nuclear Power Plants," March 1971, (Rev. 1) November 1978, (Rev. 2) December 1979 [8001220580], (Rev. 3) July 1993 [9308180045].

1484. Regulatory Guide 1.160, "Monitoring the Effectiveness of Maintenance at Nuclear Power Plants," U.S. Nuclear Regulatory Commission, June 1993 [9306250035], (Rev. 1) January 1995 [9501300137].

1485. Federal Register Notice 58 FR 41813, "Regulatory Guide; Withdrawal," August 5, 1993.

1486. Memorandum for J. Taylor from E. Beckjord, "Resolution of Generic Safety Issue B-56, 'Diesel Generator Reliability,'" June 29, 1993. [9312220205]

1487. NRC Letter to All Licensees of Operating Reactors, Applicants for An Operating License, and Holders of Construction Permits, "Proposed Staff Actions to Improve and Maintain Diesel Generator Reliability (Generic Letter 84-15)," July 2, 1984. [8407020206]

1488. Memorandum for E. Jordan from T. Novak, "Engineering Evaluation Report - Pump Damage Due to Low Flow Cavitation (AEOD/E807)," October 18, 1988. [9312220206, 8811170140, 8810250191]

1489. NRC Bulletin No. 88-04, "Potential Safety-Related Pump Loss," U.S. Nuclear Regulatory Commission, May 5, 1988. [8804290177]

1490. NUREG/CR-5706, "Potential Safety-Related Pump Loss: An Assessment of Industry Data," U.S. Nuclear Regulatory Commission, June 1991.

1491. Memorandum for J. Norberg from R. Jones, "Review of Responses to Bulletin 88-04," July 22, 1991. [9108010062]

1492. NUREG/CR-5404, "Auxiliary Feedwater System Aging Study," U.S. Nuclear Regulatory Commission, (Vol. 1) March 1990, (Vol. 2) July 1993.

1493. Memorandum for V. Stello from S. Chilk, "Staff Requirements - Briefing on Status of Unresolved Safety/Generic Issues, 10:00 a.m., Wednesday, October 21, 1987, Commissioners' Conference Room, D. C. Office (Open to Public Attendance)," November 6, 1987. [8711100418]

1494. NUREG/CR-5604, "Assessment of ISLOCA Risk - Methodology and Application to a Babcock and Wilcox Nuclear Power Plant," U.S. Nuclear Regulatory Commission, (Vol. 1) April 1992, (Vol. 2) April 1992, (Vol. 3) April 1992.

1495. NUREG/CR-5744, "Assessment of ISLOCA Risk - Methodology and Application to a Westinghouse Four-Loop Ice Condenser Plant," U.S. Nuclear Regulatory Commission, April 1992.

1496. NUREG/CR-5745, "Assessment of ISLOCA Risk - Methodology and Application to a Combustion Engineering Plant," U.S. Nuclear Regulatory Commission, April 1992.

1497. NUREG/CR-5603, "Pressure-Dependent Fragilities for Piping Components," U.S. Nuclear Regulatory Commission, October 1990.

1498. NUREG/CR-5862, "Screening Methods for Developing Internal Pressure Capacities for Components in Systems Interfacing With Nuclear Power Plant Reactor Coolant Systems," U.S. Nuclear Regulatory Commission, May 1992.

1499. NUREG/CR-5928, "ISLOCA Research Program Final Report," U.S. Nuclear Regulatory Commission, July 1993.

1500. NUREG/CR-5102, "Interfacing System LOCA: Pressurized Water Reactors," U.S. Nuclear Regulatory Commission, February 1989.

1501. NUREG-1463, "Regulatory Analysis for the Resolution of Generic Safety Issue 105: Interfacing System Loss-of-Coolant Accident in Light-Water Reactors," U.S. Nuclear Regulatory Commission, July 1993.

1502. NRC Information Notice 92-36, "Intersystem LOCA Outside Containment," May 7, 1992 [9205010045], (Supplement 1) February 22, 1994 [9402150320].

1503. Memorandum for F. Gillespie from W. Minners, "Proposed Resolution of Generic Issue 105, `Interfacing Systems LOCA in LWRs," April 2, 1993. [9312220208]

1504. Memorandum for J. Taylor from E. Beckjord, "Technical Resolution of Generic Issue 105 (GI-105) `Interfacing Systems Loss of Coolant Accident (ISLOCA) in LWRs," June 3, 1993. [9312220210]

1505. Memorandum for J. Taylor from S. Chilk, "SECY-93-108 - Revised Guidelines for Prioritization of Generic Safety Issues," July 23, 1993. [9308270094]

1506. Memorandum for W. Minners from L. Shao, "Closeout of GSI 119.4," July 17, 1992. [9312220212]

1507. Regulatory Guide 1.44, "Control of the Use of Sensitized Stainless Steel," U.S. Atomic Energy Commission, May 1973. [7907100182]

1508. Memorandum for J. Taylor from E. Beckjord, "Final Technical Resolution of Generic Safety Issue 120, 'On-Line Testability of Protection System,'" March 4, 1993. [9502070269]

1509. Letter to J. Taylor from P. Shewmon, "Prioritization of Generic Issue 152, 'Design Basis for Valves that Might Be Subjected to Significant Blowdown Loads,'" April 23, 1993. [9305060143]

1510. Letter to J. Wilkins (ACRS) from J. Taylor (EDO) June 8, 1993. [9306210081, 9305200137]

1511. Memorandum for J. Taylor from E. Beckjord, "Resolution of GI-142, 'Leakage Through Electrical Isolators,'" March 9, 1993. [9312220214]

1512. NUREG-1461, "Regulatory Analysis for the Resolution of Generic Issue 153: Loss of Essential Service Water in LWRs," U.S. Nuclear Regulatory Commission, August 1993.

1513. Memorandum for J. Taylor from E. Beckjord, "Resolution of Generic Issue 153 (GI-153), 'Loss of Essential Service Water in LWRs,'" June 14, 1993. [9312220216]

1514. NUREG/CR-5910, "Loss of Essential Service Water in LWRs (GI-153)," U.S. Nuclear Regulatory Commission, August 1992.

1515. Memorandum for E. Beckjord from T. Murley, "Proposed New Generic Issue: 'Determination of Neutron Fluence to PWR Pressure Vessels,'" October 8, 1992. [9210190215]

1516. Memorandum for T. Murley from E. Beckjord, "Proposed New Generic Issue: Determination of Neutron Fluence to PWR Pressure Vessels," November 30, 1992. [9312220218]

1517. Memorandum for J. Sniezek from T. Murley and E. Beckjord, "Resolution of Fatigue and Environmental Qualification Issues Related to License Renewal," April 1, 1993. [9304270324]

1518. Memorandum for The Chairman, et al., from J. Taylor, "Environmental Qualification of Electric Equipment," May 27, 1993. [9308180153]

1519. SEASF-LR-92-022, "Supplemental Study of Generic Issue No. 153, 'Loss of Essential Service Water in LWRs,'" Science and Engineering Associates, Inc., (Rev. 1) January 1993. [9502070279]

1520. Memorandum for E. Beckjord from T. Murley, "Request to Prioritize a New Generic Issue for Spring-Actuated Safety and Relief Valve Reliability," October 8, 1992. [9312280153]

1521. NUREG/CR-3696, "Potential Human Factors Deficiencies in the Design of Local Control Stations and Operator Interfaces in Nuclear Power Plants," U.S. Nuclear Regulatory Commission, April 1984.

1522. NUREG/CR-3217, "Near-Term Improvements for Nuclear Power Plant Control Room Annunciator Systems," U.S. Nuclear Regulatory Commission, April 1983.

1523. NUREG/CR-3987, "Computerized Annunciator Systems," U.S. Nuclear Regulatory Commission, June 1985.

1524. NUREG/CR-5572, "An Evaluation of the Effects of Local Control Station Design Configurations on Human Performance and Nuclear Power Plant Risk," U.S. Nuclear Regulatory Commission, September 1990.

1525. Memorandum for J. Taylor from E. Beckjord, "Termination of Work on Generic Safety Issue HF5.1 'Local Control Stations,'" June 29, 1993. [9312220224]

1526. Memorandum for J. Taylor from E. Beckjord, "Resolution of Human Factors Generic Issue 5.2, 'Review Criteria for Human Factors Aspects of Advanced Controls and Instrumentation,'" June 29, 1993. [9312220225]

1527. NUREG/CR-5186, "Value/Impact Analysis of Generic Issue 94, 'Additional Low Temperature Overpressure Protection for Light Water Reactors,'" U.S. Nuclear Regulatory Commission, November 1988.

1528. NRC Information Notice No. 90-22, "Unanticipated Equipment Actuations Following Restoration of Power to Rosemount Transmitter Trip Units," U.S. Nuclear Regulatory Commission, March 23, 1990. [9003190349]

1529. NUREG-1422, "Summary of Chernobyl Followup Research Activities," U.S. Nuclear Regulatory Commission, June 1992.

1530. Memorandum for J. Taylor from E. Beckjord, "Resolution of Generic Issue 155.1, 'More Realistic Source Term Assumptions,'" March 13, 1995. [9511090074]

1531. NUREG-0940, "Enforcement Actions: Significant Actions Resolved," U.S. Nuclear Regulatory Commission, (Vol. 14, No. 2, Parts 1, 2, and 3) August 1995.

1532. Memorandum for C. Serpan from W. Minners, "Identification of New Generic Issue: Hydrogen Storage Facility Separation," December 16, 1993. [9312290134]

1533. Letter to the NRC from M. Tuckman (Duke Power Company), "Oconee Nuclear Station, Docket Nos. 50-269, 50-270, and 50-287, Generic Letter 88-20," November 30, 1990. [9012060005]

1534. EGG-SSRE-9747, "Improved Estimates of Separation Distances to Prevent Unacceptable Damage to Nuclear Power Plant Structures from Hydrogen Detonation for Gaseous Hydrogen Storage," Idaho National Engineering Laboratory, (Draft) November 1993. [9502070287]

1535. SCIE-EGG-103-89, "Draft Technical Evaluation Report on U.S. Commercial Power Reactor Hydrogen Tank Farms and Their Compliance With Separation Distance Safety Criteria," Scientech, Inc., March 1990. [9502070289]

1536. Memorandum for J. Taylor from E. Beckjord, "Resolution of GI-I.D.3, 'Safety System Status Monitoring,'" August 20, 1993. [9502070295]

1537. Memorandum for T. Murley from E. Beckjord, "Research Information Letter Number 171, 'Continuous On-Line Reactor Surveillance System,'" May 4, 1993. [9305100271]

1538. Memorandum for J. Taylor from E. Beckjord, "Closure of Generic Issue I.D.5(3), 'On-Line Automated Continuous Reactor Surveillance Systems,'" November 12, 1993. [9502070301]

1539. SECY-93-119, "TMI-2 Vessel Investigation Project," May 5, 1993. [9305100253]

1540. Memorandum for J. Taylor from E. Beckjord, "Closure of Generic Issue II.H.2, 'Obtain Data on Conditions Inside TMI-2 Containment,'" February 9, 1994. [9502070304]

1541. NUREG-1472, "Regulatory Analysis for the Resolution of Generic Issue 57: Effects of Fire Protection System Actuation on Safety-Related Equipment," U.S. Nuclear Regulatory Commission, October 1993.

1542. Memorandum for J. Taylor from E. Beckjord, "Resolution of Generic Safety Issue (GSI)-57, 'Effects of Fire Protection System Actuation on Safety-Related Equipment,'" September 30, 1993. [9502070315]

1543. NRC Information Notice 94-12, "Insights Gained from Resolving Generic Issue 57: Effects of Fire Protection System Actuation on Safety-Related Equipment," U.S. Nuclear Regulatory Commission, February 9, 1994. [9402030011]

1544. NUREG/CR-5759, "Risk Analysis of Highly Combustible Gas Storage, Supply, and Distribution Systems in Pressurized Water Reactor Plants," U.S. Nuclear Regulatory Commission, June 1993.

1545. NUREG-1364, "Regulatory Analysis for the Resolution of Generic Safety Issue 106: Piping and the Use of Highly Combustible Gases in Vital Areas," U.S. Nuclear Regulatory Commission, June 1993.

1546. Memorandum for J. Taylor from E. Beckjord, "Proposed Resolution of GSI-106, 'Piping and the Use of Highly Combustible Gases in Vital Areas,'" November 3, 1993. [9502070320]

1547. Letter to All Holders of Operating Licenses or Construction Permits for Nuclear Power Reactors, "Research Results on Generic Safety Issue 106, 'Piping and the Use of Highly Combustible Gases in Vital Areas,' (Generic Letter 93-06)," U.S. Nuclear Regulatory Commission, October 25, 1993. [9310200286]

1548. Memorandum for F. Gillespie from E. Beckjord, "Generic Letter for Implementation of Resolution of Generic Safety Issue 106, 'Piping and the Use of Highly Combustible Gases in Vital Areas,'" December 14, 1992. [9502070322]

1549. NUREG-1427, "Regulatory Analysis for the Resolution of Generic Issue 143: Availability of Chilled Water System and Room Cooling," U.S. Nuclear Regulatory Commission, December 1993.

1550. NUREG/CR-6084, "Value Impact Analysis of Generic Issue 143, 'Availability of Heating, Ventilation, Air Conditioning (HVAC) and Chilled Water Systems,'" U.S. Nuclear Regulatory Commission, November 1993.

1551. Memorandum for J. Taylor from E. Beckjord, "Resolution of Generic Issue 143 (GI-143), 'Availability of Chilled Water System and Room Cooling,'" September 30, 1993. [9502070325]

1552. NRC Information Notice No. 89-44, "Hydrogen Storage on the Roof of the Control Room," U.S. Nuclear Regulatory Commission, April 27, 1989. [8904260247]

1553. Memorandum for A. Gody from G. Holahan, "Prioritization of Proposed Generic Issue 162, 'Inadequate Technical Specifications for Shared Systems at Multi-plant Sites When One Unit Is Shut Down,'" March 20, 1993. [9304070074]

1554. Memorandum for J. Taylor from E. Beckjord, "Resolution of GI 67.5.1, 'Reassessment of SGTR Radiological Consequences,'" June 30, 1994. [9407130262]

1555. Memorandum for E. Beckjord from J. Murphy, "Staff Review Guidance for Generic Safety Issue (GSI) 147, 'Fire-Induced Alternate Shutdown/Control Room Panel Interactions,'" March 9, 1994. [9502070329]

1556. Memorandum for C. Rossi, et al., from T. Novak, "Safety and Safety/Relief Valve Reliability," April 24, 1992. [9205060277]

1557. NRC Information Notice No. 90-05, "Inter-System Discharge of Reactor Coolant," U.S. Nuclear Regulatory Commission, January 29, 1990. [9001230126]

1558. NRC Information Notice 92-64, "Nozzle Ring Settings on Low Pressure Water-Relief Valves," U.S. Nuclear Regulatory Commission, August 28, 1992. [9208240139]

1559. NRC Information Notice 92-61, "Loss of High Head Safety Injection," U.S. Nuclear Regulatory Commission, August 20, 1992 [9208180039], (Supplement 1) November 6, 1992 [9211020211].

1560. NUREG/CR-6001, "Aging Assessment of BWR Standby Liquid Control Systems," U.S. Nuclear Regulatory Commission, August 1992.

1561. NRC Information Notice No. 90-18, "Potential Problems With Crosby Safety Relief Valves Used on Diesel Generator Air Start Receiver Tanks," U.S. Nuclear Regulatory Commission, March 9, 1990. [9003050043]

1562. Memorandum for J. Taylor from E. Beckjord, "Resolution of Human Factors Generic Issue 4.4, 'Guidelines for Upgrading Other Procedures,'" July 29, 1993. [9502070331]

1563. NUREG/CR-5382, "Screening of Generic Safety Issues for License Renewal Considerations," U.S. Nuclear Regulatory Commission, December 1991.

1564. Memorandum for W. Russell from E. Beckjord, "License Renewal Implications of Generic Safety Issues (GSIs) Prioritized and/or Resolved Between October 1990 and March 1994," May 5, 1994. [9406170365]

1565. Memorandum for T. Murley from W. Russell and J. Partlow, "Closeout of TMI Action Plan Items III.A.1.2 and III.A.2.2 (Multi-Plant Actions F-63, F-64, F-65, and F-68)," October 2, 1990. [9010160111]

1566. SECY-80-275, "Final Rulemaking on Emergency Preparedness," June 3, 1980. [8007090015]

1567. NUREG/CP-0011, "Proceedings to Workshops Held on Proposed Rulemaking on Emergency Planning for Nuclear Power Plants," U.S. Nuclear Regulatory Commission, April 1980.

1568. Federal Register Notice 46 FR 11666, "10 CFR Parts 30, 40, 50, 70 and 72 Decommissioning Criteria for Nuclear Facilities; Notice of Availability of Draft Generic Environment Impact Statement," February 10, 1981.

1569. SECY-87-309, "Final Rule Amendments to 10 CFR Parts 30, 40, 50, 51, 70, and 72: General Requirements for Decommissioning Nuclear Facilities," December 17, 1987. [8801130361]

1570. SECY-88-94, "Final Rule Amendments to 10 CFR Parts 30, 40, 50, 51, 70, and 72: General Requirements for Decommissioning Nuclear Facilities (SECY-87-309)," April 5, 1988. [8804120065]

1571. SECY-94-179, "Notice of Proposed Rulemaking on Decommissioning of Nuclear Power Reactors," July 7, 1994. [9407180100]

1572. Memorandum for J. Taylor and K. Cyr from J. Hoyle, "SECY-94-179 - Notice of Propose Rulemaking on Decommissioning of Nuclear Power Reactors and COMKR-94-002 - Decommissioning of Nuclear Power Reactors and Comments on SECY-94-179," October 5, 1994. [9410270085]

1573. NRC Letter to All Pressurized Water Reactor Licensees, "Inadvertent Boron Dilution Events (Generic Letter 85-05)," January 31, 1985. [8502010366]

1574. Memorandum for J. Taylor from R. Bernero, "Resolution of Issue Numbert B-64, 'Decommissioning of Reactors,' of the Generic Issue Management Control System," September 26, 1994. [9410110028]

1575. Memorandum for C. Serpan and C. Ader from J. Greeves, "Reference to the U.S. Nuclear Regulatory Commission Dam Safety Program in NUREG-0933," August 12, 1994. [9409060217]

1576. "Approaches to Upgrading Procedures in Nuclear Power Plants," Pacific Northwest Laboratory, August 1994. [9507280167]

1577. NUREG/CR-6146, "Local Control Stations: Human Engineering Issues and Insights," U.S. Nuclear Regulatory Commission, September 1994.

1578. NUREG/CR-6105, "Human Factors Engineering Guidance for the Review of Advanced Alarm Systems," U.S. Nuclear Regulatory Commission, September 1994.

1579. Letter to L. Zech from F. Remick, "Resolution of Generic Issue 43, 'Air Systems Reliability,'" Januuary 19, 1989. [8901260092]

1580. Memorandum for J. Larkins from E. Beckjord, "Evaluation of Potential Safety Issues from the Multiple System Responses Program," June 3, 1994. [9406230143]

1581. Memorandum for T. Speis from A. Thadani, "Review of NUREG/CR-5420," April 30, 1995. [9505230058]

1582. NUREG/CR-5455, "Development of NRC's Human Performance Investigation Process (HPIP)," U.S. Nuclear Regulatory Commission, (Vol. 1) October 1993, (Vol. 2) October 1993, (Vol. 3) October 1993.

1583. NUREG-0711, "Human Factors Engineering Program Review Model," U.S. Nuclear Regulatory Commission, July 1994.

1584. NUREG/CR-5908, "Advanced Human-System Interface Design Review Guideline," U.S. Nuclear Regulatory Commission, (Vol. 1) July 1994, (Vol. 2) July 1994.

1585. Memorandum for L. Shao from B. Sheron, "Proposed Generic Issue on Safety Systems' Response to the Sequential Occurrence of LOCA and Loss of Offsite Power Events," February 17, 1995. [9502270179]

1586. NRC Information Notice 93-17, "Safety Systems Response to Loss of Coolant and Loss of Offsite Power," March 8, 1993 [9303020536], (Rev. 1) March 25, 1994 [9403220236].

1587. NUREG-1335, "Individual Plant Examination: Submittal Guidance," U.S. Nuclear Regulatory Commission, August 1989.

1588. NUREG/CR-5580, "Evaluation of Generic Issue 57: Effects of Fire Protection System Actuation on Safety-Related Equipment," (Vol. 1) December 1992, (Vol. 2) December 1992, (Vol. 3) December 1992, (Vol. 4) December 1992, (Vol. 5) December 1992.

1589. NUREG/CR-5720, "Motor-Operated Valve Research Update," U.S. Nuclear Regulatory Commission, June 1992.

1590. EGG-REQ-7297, "Summary of Valve Assemblies in High Energy BWR Systems Outside of Containment -- Interim Report," EG&G Idaho, Inc., June 1986. [9511090106]

1591. Regulatory Guide 1.22, "Periodic Testing of Protection System Actuation Functions," U.S. Nuclear Regulatory Commission, February 1972. [7907100108]

1592. Regulatory Guide 1.118, "Periodic Testing of Electric Power and Protection Systems," U.S. Nuclear Regulatory Commission, June 1976, (Rev. 1) November 1977, (Rev. 2) June 1978 [7907110110], (Rev. 3) April 1995 [9505030214].

1593. NUREG-1453, "Regulatory Analysis for the Resolution of Generic Issue 142: Leakage Through Electrical Isolators in Instrumentation Circuits," U.S. Nuclear Regulatory Commission, September 1993.

1594. Regulatory Guide 1.77, "Assumptions Used for Evaluating a Control Rod Ejection Accident for Pressurized Water Reactors," U.S. Nuclear Regulatory Commission, May 1974. [7907100299]

1595. Memorandum for E. Beckjord from T. Murley, "User Need for Assistance on High Burnup Fuels," October 4, 1993. [9310270186]

1596. Memorandum for W. Russell from E. Beckjord, "Fuel Damage Criteria for Reactivity Transients," April 29, 1994. [9511090065]

1597. NRC Information Notice 94-64, "Reactivity Insertion Transient and Accident Limits for High Burnup Fuel," August 31, 1994 [9408250234], (Supplement 1) April 6, 1995 [9503310049].

1598. Memorandum to the Chairman, et al., from J. Taylor, "Reactivity Transients and High-Burnup Fuel," September 13, 1994. [9409300142]

1599. Memorandum to the Chairman, et al., from J. Taylor, "Reactivity Transients and Fuel Damage Criteria for High Burnup Fuel," November 9, 1994. [9511090217]

1600. NUREG/CP-0139, "Transactions of the Twenty-Second Water Reactor Safety Information Meeting," U.S. Nuclear Regulatory Commission, October 1994.

1601. Memorandum to C. Serpan from A. Chaffee, "Nuclear Reactor Regulation (NRR) Input Into Research NUREG-0933 (WITS Item 9400213)," February 13, 1996. [9602260124]

1602. NUREG-1352, "Action Plans for Motor-Operated Valves and Check Valves," U.S. Nuclear Regulatory Commission, June 1990.

1603. Memorandum to A. Thadani from J. Strosnider, "Plan for Addressing Generic Reactor Pressure Vessel Issues," August 9, 1995. [9508150078]

1604. NUREG-1511, "Reactor Pressure Vessel Status Report," U.S. Nuclear Regulatory Commission, December 1994.

1605. Memorandum to A. Thadani from J. Strosnider, "Assessment of Impact of Increased Variability in Chemistry on the RT_{PTS} Value of PWR Reactor Vessels," May 5, 1995 [9505100187]

1606. SECY-91-161, "Schedules for the Advanced Reactor Reviews and Regulatory Guidance Revisions," May 31, 1991. [9106050174]

1607. Memorandum for W. Russell from F. Gillespie, "Action Plan for the Development of Draft SRP Revisions in the SRP-UDP," May 17, 1994. [9406280148, 9405270273]

1608. Memorandum to J. Taylor from C. Paperiello and W. Russell, "Dry Cask Storage Action Plan," July 28, 1995. [9508250186]

1609. Memorandum to J. Taylor from W. Russell and R. Bernero, "Realignment of Reactor Decommissioning Program," March 15, 1995. [9508250180]

1610. NUREG-1474, "Effect of Hurricane Andrew on the Turkey Point Nuclear Generating Station from August 20 - 30, 1992," U.S. Nuclear Regulatory Commission and the Institute of Nuclear Power Operations, March 1993. [9307060041]

1611. Memorandum for J. Taylor from T. Murley, "Office of Nuclear Reactor Regulation (NRR) Plan for Generic Follow-on Actions - 'Report on the Effect of Hurricane Andrew on the Turkey Point Nuclear Generating Station from August 20 - 30, 1992,'" July 22, 1993. [9308160297]

1612. NRC Information Notice 93-53, "Effect of Hurricane Andrew on Turkey Point Nuclear Generating Station and Lessons Learned," July 20, 1993 [9307140056], (Supplement 1) April 29, 1994 [9404280023].

1613. NUREG/CR-6224, "Parametric Study of the Potential for BWR ECCS Strainer Blockage Due to LOCA Generated Debris," U.S. Nuclear Regulatory Commission, October 1995.

1614. NRC Information Notice 92-71, "Partial Plugging of Suppression Pool Strainers at a Foreign BWR," September 30, 1992. [9209290014]

1615. NRC Bulletin No. 93-02, "Debris Plugging of Emergency Core Cooling Suction Strainers," May 11, 1993. [9305110015]

1616. NRC Information Notice 93-34, "Potential for Loss of Emergency Cooling Function Due to a Combination of Operational and Post-LOCA Debris in Containment," April 26, 1993 [9304260085], (Supplement 1) May 6, 1993 [9305050002].

1617. NRC Bulletin 95-02, "Unexpected Clogging of a Residual Heat Removal (RHR) Pump Strainer While Operating in Suppression Pool Cooling Mode," October 17, 1995. [9510040059]

1618. NRC Information Notice No. 88-28, "Potential for Loss of Post-LOCA Recirculation Capability Due to Insulation Debris Blockage," May 19, 1988. [8805130108]

1619. NRC Information Notice 92-85, "Potential Failures of Emergency Core Cooling Systems Caused by Foreign Material Blockage," December 23, 1992. [9212170209]

1620. NRC Information Notice 94-57, "Debris in Containment and the Residual Heat Removal System," August 12, 1994. [9408080111]

1621. NRC Information Notice 95-06, "Potential Blockage of Safety-Related Strainers by Material Brought Inside Containment," January 25, 1995. [9501190091]

1622. NRC Information Notice 95-47, "Unexpected Opening of a Safety/Relief Valve and Complications Involving Suppression Pool Cooling Strainer Blockage," October 4, 1995 [9510030107], (Rev. 1) November 30, 1995 [9511270084].

1623. Memorandum to A. Thadani from G. Holahan, "Task Action Plan for Spent Fuel Storage Pool Safety," October 13, 1994. [9410190155]

1624. NRC Information Notice 94-38, "Results of a Special NRC Inspection at Dresden Nuclear Power Station Unit 1 Following a Rupture of Service Water Inside Containment," May 27, 1994. [9405240025]

1625. NRC Bulletin 94-01, "Potential Fuel Pool Draindown Caused by Inadequate Maintenance Practices at Dresden Unit 1," April 14, 1994. [9404120041]

1626. Memorandum for A. Thadani from G. Holahan, "Revision to Report on the Re-Assessment of the NRC Fire Protection Program," February 27, 1993. [9504190319]

1627. SECY-93-143, "NRC Staff Actions to Address the Recommendations in the Report on the Reassessment of the NRC Fire Protection Program," May 21, 1993. [9306030231]

1628. SECY-95-034, "Status of Recommendations Resulting from the Reassessment of the NRC Fire Protection Program," February 13, 1995. [9503060019]

1629. Memorandum for Chairman Jackson, et al., from J. Taylor, "Semiannual Report on the Status of the Thermo-Lag Action Plan and Fire Protection Task Action Plan," September 20, 1995. [9509250375]

1630. SECY-94-219, "Proposed Agency-Wide Implementation Plan for Probabilistic Risk Assessment (PRA)," August 19, 1994. [9409090234]

1631. SECY-95-079, "Status Update of the Agency-Wide Implementation Plan for Probabilistic Risk Assessment," March 30, 1995. [9504100180]

1632. SECY-95-126, "Final Policy Statement on the Use of Probabilistic Risk Assessment Methods in Nuclear Regulatory Activities," May 18, 1995. [9506020152]

1633. SECY-95-280, "Framework for Applying Probabilistic Risk Analysis in Reactor Regulation," November 27, 1995. [9512180168, 9512040133]

1634. Memorandum to Chairman Jackson from J. Taylor, "Improvements Associated With Managing the Utilization of Probabilistic Risk Assessment (PRA) and Digital Instrumentation and Control Technology," January 3, 1996. [9601180203]

1635. Memorandum for J. Taylor from T. Murley, et al., "Agency Directions for Current and Future Uses of Probabilistic Risk Assessment (PRA)," November 2, 1993. [9311100145]

1636. Memorandum to A. Thadani from G. Holahan and R. Spessard, "Action Plan to Monitor, Review, and Improve Fuel and Core Components Operating Performance," October 7, 1994. [9411040040]

1637. NRC Letter to All Operating Reactor Licensees, "Licensee Qualification for Performing Safety Analyses in Support of Licensing Actions (Generic Letter No. 83-11)," February 4, 1983. [8302080304]

1638. NRC Letter to All Power Reactor Licensees and Applicants, "Removal of Cycle-Specific Parameter Limits from Technical Specifications (Generic Letter 88-16)," October 4, 1988. [8810050058, 8810140007]

1639. NRC Information Notice No. 91-47, "Failure of Thermo-Lag Fire Barrier Material to Pass Fire Endurance Test," August 6, 1991. [9108020180]

1640. NRC Information Notice 91-79, "Deficiencies in the Procedures for Installing Thermo-Lag Fire Barrier Materials," December 6, 1991 [9112020091], (Supplement 1) August 4, 1994 [9408030006].

1641. NRC Information Notice 92-55, "Current Fire Endurance Test Results for Thermo-Lag Fire Barrier Material," July 27, 1992. [9207270345]

1642. NRC Information Notice 92-82, "Results of Thermo-Lag 330-1 Combustibility Testing," December 15, 1992. [9212090211]

1643. NRC Information Notice 94-22, "Fire Endurance and Ampacity Derating Test Results for 3-Hour Fire-Rated Thermo-Lag 330-1 Fire Barriers," March 16, 1994. [9403150511]

1644. NRC Information Notice 94-34, "Thermo-Lag 330-660 Flexi-Blanket Ampacity Derating Concerns," May 13, 1994. [9405090108]

1645. NRC Information Notice 94-86, "Legal Actions Against Thermal Science, Inc., Manufacturer of Thermo-Lag," December 22, 1994. [9412160132]

1646. NRC Information Notice 95-27, "NRC Review of Nuclear Energy Institute, 'Thermo-Lag 330-1 Combustibility Evaluation Methodology Plant Screening Guide,'" May 31, 1995. [9505240424]

1647. NRC Information Notice 95-32, "Thermo-Lag 330-1 Flame Spread Test Results," August 10, 1995. [9508040074]

1648. NRC Information Notice 95-49, "Seismic Adequacy of Thermo-Lag Panels," October 27, 1995. [9510240388]

1649. NRC Information Notice 95-03, "Loss of Reactor Coolant Inventory and Potential Loss of Emergency Mitigation Functions While in a Shutdown Condition," January 18, 1995 [9501110412], (Supplement 1) March 25, 1996 [9602050208].

1650. NRC Letter to All Power Reactor Licensees and Applicants for Power Reactor Licenses, "Policy Statement on Engineering Expertise on Shift (Generic Letter 86-04)," February 13, 1986. [8602240459]

1651. NRC Information Notice 91-77, "Shift Staffing at Nuclear Power Plants," November 26, 1991. [9111200123]

1652. NRC Information Notice 93-44, "Operational Challenges During a Dual-Unit Transient," June 15, 1993. [9306080170]

1653. NRC Information Notice 93-81, "Implementation of Engineering Expertise on Shift," October 12, 1993. [9310060239]

1654. NRC Information Notice 95-48, "Results of Shift Staffing Study," October 10, 1995. [9510040181]

1655. Letter to B. Boger (NRC) from R. Whitesel (NUMARC), December 29, 1992. [9301080124]

1656. SECY-93-184, "Shift Staffing at Nuclear Power Plants," June 29, 1993. [9307080273]

1657. SECY-93-193, "Policy on Shift Technical Advisor Position at Nuclear Power Plants," July 13, 1993. [9307200065]

1658. NRC Bulletin No. 90-01, "Loss of Fill-Oil in Transmitters Manufactured by Rosemount," March 9, 1990 [9003050148], (Supplement 1) December 22, 1992 [9212170002].

1659. Memorandum for R. Zimmerman, et al., from J. Sniezek, "Review of Rosemount Transmitter Issues," May 21, 1993. [9308090287, 9310010241]

1660. SECY-95-078, "Staff Actions to Address Recommendations Resulting from Recent Evaluations of the Notice of Enforcement Discretion (NOED) Policy and Process," March 29, 1995. [9504100173]

1661. NUREG-1600, "General Statement of Policy and Procedures for NRC Enforcement Actions," U.S. Nuclear Regulatory Commission, July 1995.

1662. Memorandum for E. Jordan, et al., from J. Taylor, "Unauthorized Forced Entry Into the Protected Area at Three Mile Island Unit 1 on February 7, 1993 (NUREG-1485)," June 18, 1993. [9308110317]

1663. NRC Letter to All Holders of Operating Licenses or Construction or Construction Permits for Nuclear Power Reactors, Except for Big Rock Point and Facilities Permanently or Indefinitely Shut Down, "Emergency Response Data System Test Program (Generic Letter 93-01)," March 3, 1993. [9302240242]

1664. NRC Information Notice 93-94, "Unauthorized Forced Entry Into the Protected Area at Three Mile Island Unit 1 on February 7, 1993," December 9, 1993. [9312030104]

1665. NUREG-1485, "Unauthorized Forced Entry Into the Protected Area at Three Mile Island Unit 1 on February 7, 1993," U.S. Nuclear Regulatory Commission, April 1993.

1666. NUREG/CR-6432, "Estimated Net Value and Uncertainty for Automating ECCS Switchover at PWRs," U.S. Nuclear Regulatory Commission, February 1996.

1667. Memorandum for J. Taylor from D. Morrison, "Technical Resolution of Generic Issue 24 (GI-24), 'Automatic ECCS Switch to Recirculation,'" October 31, 1995. [9511140037]

1668. NUREG/CR-5904, "Functional Issues and Environmental Qualification of Digital Protection Systems of Advanced Light-Water Nuclear Reactors," U.S. Nuclear Regulatory Commission, April 1994.

1669. NUREG/CR-5941, "Technical Basis for Evaluating Electromagnetic and Radio-Frequency Interference in Safety-Related I&C Systems," U.S. Nuclear Regulatory Commission, April 1994.

1670. NRC Generic Letter 94-03, "Intergrannular Stress Corrosion Cracking of Core Shrouds in Boiling Water Reactors," July 25, 1994. [9407210200]

1671. Memorandum for A. Thadani from B. Sheron, "Staff Action Plan for the Resolution of Issues Associated With Boiling Water Reactor Internals Cracking," April 26, 1995. [9505220070]

1672. NRC Letter to All Holders of Operating Licenses or Construction Permits for Nuclear Power Plants (Except Yankee Atomic Electric Company, Licensee for the Yankee Nuclear Power Station), "Reactor Vessel Structural Integrity, 10 CFR 50.54(f) (Generic Letter 92-01)," February 28, 1992, (Rev. 1) March 6, 1992 [9203060147], (Rev. 1, Supplement 1) May 19, 1995 [9505090312].

1673. Memorandum for E. Beckjord from W. Russell, "NRR User Need Request for Support of Resolving Problem of Stress Corrosion Cracking of Reactor Vessel Internal Components," December 2, 1994. [9505090299]

1674. Memorandum for D. Morrison from W. Russell, "Request for Research on Reactor Pressure Vessel Integrity," August 11, 1995. [9508220323]

1675. Memorandum to L. Shao from M. Mayfield, "Summary, NRC/NEI Workshop on Nuclear RPV Integrity," September 6, 1995. [9509200141]

1676. NRC Administrative Letter 95-03, "Availability of Reactor Vessel Integrity Database," August 4, 1995. [9508010148]

1677. AEOD/S95-01, "Reactor Coolant System Blowdown at Wolf Creek on September 17, 1994," Office for Analysis and Evaluation of Operational Data, U.S. Nuclear Regulatory Commission, March 1995. [9503310036]

1678. Memorandum to A. Thadani from R. Jones, "Proposed Action Plan for the 'Wolf Creek Draindown Event,'" September 8, 1995. [9509140225]

1679. Memorandum for the Chairman from J. Taylor, "Commercial Contract for Technical Assistance to Support the Standard Review Plan Update and Development Program," November 18, 1991.

1680. Memorandum for J. Taylor from I. Selin, "Commercial Contract for Technical Assistance to Support the Standard Review Plan Update and Development Program," December 13, 1991.

1681. Memorandum for J. Taylor from T. Murley, "Planned Actions to Address the Issues from the Office of Inspector General's Report on the NRC Staff's Review and Acceptance of Thermo-Lag 330-1 Fire Barrier Material," August 21, 1992. [9209250288]

1682. NRC Bulletin No. 92-01, "Failure of Thermo-Lag 330 Fire Barrier System to Maintain Cabling in Wide Cable Trays and Small Conduits Free from Fire Damage," June 24, 1992. [9206240122]

1683. Memorandum for W. Russell from T. Murley, "Final Report - Special Review Team for the Review of Thermo-Lag Fire Barrier Performance," April 21, 1992. [9205120277]

1684. Mmemorandum for E. Beckjord from T. Murley, "Request for Prioritization of Potential Generic Safety Issue - BWR MSIV Common Mode Failure Due to Loss of Accumulator Pressure," May 25, 1993. [9308160285]

1685. Memorandum for T. Murley from E. Beckjord, "Request for Prioritization of Potential Generic Safety Issue - BWR MSIV Common Mode Failure Due to Loss of Accumulator Pressure," June 29, 1993. [9509050193]

1686. SEA No. 95-3101-01-A:1, "Technical Information for Prioritization of Generic Safety Issues," Science and Engineering Associates, Inc., June 1996. [9704090123]

1687. SEA No. 97-3701-010-A:1, "Issue 107, Main Transformer Failures," Science and Engineering Associates, Inc., March 28, 1997. [9704090149]

1688. NUREG/CR-5595, "FORECAST: Regulatory Effects Cost Analysis Software Manual," (Rev. 1) July 1996.

1689. Memorandum to J. Taylor from J. Hoyle, "COMSECY-95-033 - Proposed Dollar per Person-Rem Conversion Factor; Response to SRM Concerning Issuance of Regulatory Analysis Guidelines of the U.S. Nuclear Regulatory Commission and SRM Concerning the Need for a Backfit Rule for Materials Licensees (RES-950225) (WITS-9100294)," September 18, 1995. [9803260148]

1690. Memorandum for All RES Employees from D. Morrison, "RES Office Letter No. 3C -- Procedures for Obtaining Regulatory Impact Analysis Review and Support," February 23, 1996. [9803260238]

1691. Memorandum to D. Morrison from W. Russell, "Third Supplemental User Need Request Regarding Potential for Loss of Emergency Core Cooling in a Boiling Water Reactor due to Clogging of the Suction Strainers by Loss-of-Coolant Accident Generated Debris," December 7, 1995. [9512140237]

1692. Memorandum to L. Shao from M. Marshall, "Expansion of Work Being Performed Under GSI-191, `Assessment of Debris Accumulation on Pressurized Water Reactors Sump Performance,'" May 14, 1997. [9706060061]

1693. Memorandum to Chairman Jackson, et al., from J. Taylor, "Report on Survey of Refueling Practices," May 21, 1996. [9606030213]

1694. Memorandum to Chairman Jackson, et al., from J. Taylor, "Resolution of Spent Fuel Storage Pool Action Plan Issues," July 26, 1996. [9611180017]

1695. SECY-97-168, "Issuance for Public Comment of Proposed Rulemaking Package for Shutdown and Fuel Storage Pool Operation," July 30, 1997. [9708150168]

1696. Memorandum to L. Callan from J. Hoyle, "Staff Requirements - SECY-97-168 - Issuance for Public Comment of Proposed Rulemaking Package for Shutdown and Fuel Storage Pool Operation," December 11, 1997. [9712180222]

1697. Regulatory Guide 1.13, "Spent Fuel Storage Facility Design Basis," U.S. Nuclear Regulatory Commission, (Rev. 1) December 1975 [7907100079], (Draft Rev. 2) December 1981 [9803260142].

1698. Memorandum to E. Beckjord from E. Jordan, "Periodic Review of Low Priority Generic Safety Issues," April 7, 1995. [9701230176]

1699. Memorandum to D. Morrison from W. Russell, "Periodic Review of Low-Priority Generic Issues," April 11, 1996. [9604240169]

1700. Memorandum to L. Shao from D. Cool, "Submittal of Generic Safety Issues," April 12, 1996. [9605170029]

1701. Memoranadum to F. Coffman from J. Piccone, "Status of NMSS Generic Safety Issues," December 15, 1997. [9712180068]

1702. NRC Information Notice 96-21, "Safety Concerns Related to the Design of the Door Interlock Circuit on Nucletron High-Dose Rate and Pulsed Dose Rate Remote Afterloading Brachytherapy Devices," April 10, 1996. [9604040106]

1703. NRC Information Notice 96-51, "Residual Contamination Remaining in Krypton-85 Handling System After Venting," September 11,1996. [9609050281]

1704. NRC Information Notice 96-54, "Vulnerability of Stainless Steel to Corrosion When Sensitized," October 17, 1996. [9610100212]

1705. Memorandum to L. Shao from D. Cool, "Submittal of Generic Safety Issue," June 18, 1997. [9706240185]

1706. NRC Bulletin 97-01, "Potential for Erroneous Calibration, Dose Rate, or Radiation Exposure Measurements With Certain Victoreen Model 530 and 530SI Electrometer/ Dosemeters," April 30, 1997. [9704300128]

1707. Memorandum to R. Bangart, et al., from D. Cool, "Closeout Report for Bulletin 97-01, Potential for Erroneous Measurements With Certain Victoreen Electrometers," September 8, 1997. [9709170137]

1708. Memorandum to L. Shao from D. Cool, "Submittal of Generic Safety Issue," August 5, 1997. [9708130432]

1709. Memorandum to J. Craig from F. Combs, "Submittal of New Generic Issues for Tracking in the Generic Issues Management and Control System (GIMCS)," June 4, 1998. [9806090180]

1710. NRC Information Notice 96-70, "Year 2000 Effect on Computer System Software," December 24, 1996. [9612200319]

1711. NRC Information Notice 97-61, "U.S. Department of Health and Human Services Letter to Medical Device Manufacturers on the Year 2000 Problem," August 6, 1997. [9707310130]

1712. NRC Information Notice 97-91, "Recent Failures of Control Cables Used on Amersham Model 660 Posilock Radiography Systems," December 31, 1997 [9712310254], (Supplement 1) August 10, 1998 [9808050063].

1713. NRC Information Notice 96-52, "Cracked Insertion Rods on Troxler Model 3400 Series Portable Moisture Density Gauges," September 26, 1996. [9609200181]

1714. NRC Bulletin 97-02, "Puncture Testing of Shipping Packages Under 10 CFR Part 71," September 23, 1997. [9709180179]

1715. Memorandum to D. Morrison from T. Gwynn, "Periodic Review of Low-Priority Generic Safety Issues," April 16, 1997. [9909290132]

1716. Memorandum to T. Gwynn from T. Martin, "Periodic Review of Low-Priority Generic Safety Issues," July 13, 1998. [9909290134]

1717. UCRL-52156, "Advisability of Seismic Scram," Lawrence Livermore Laboratory, June 30, 1976. [8103270386]

1718. SECY-98-166, "Summary of Activities Related to Generic Safety Issues," July 6, 1998. [9807220129, 9807170226]

1719. NUREG-1631, "Source Disconnects Resulting from Radiography Drive Cable Failures," U.S. Nuclear Regulatory Commission, June 1998.

1720. Memorandum to J. Craig from F. Combs, "Closure of NMSS Generic Issues," October 13, 1998. [9810160185]

1721. NUREG-1536, "Standard Review Plan for Dry Cask Storage Systems," U.S. Nuclear Regulatory Commission, January 1997.

1722. Letter to E. Fuller (Sierra Nuclear Corporation) from M. Knapp (NRC), "Closure of Confirmatory Action Letter 97-7-001," July 22, 1998. [9807290363]

1723. Memorandum to J. Craig from F. Combs, "Submittal of New Generic Issues for Tracking in the Generic Issues Management and Control System (GIMCS)," July 23, 1998. [9807280039]

1724. SECY-98-001, "Staff Requirements Memorandum 951219A - Briefing on Mechanisms for Addressing Generic Safety Issues," January 2, 1998. [9801230188, 9801140109]

1725. Memorandum to E. Ten Eyck, et al., from C. Paperiello, "NMSS Policy and Procedures Letter 1-57, Rev. 1, 'NMSS Generic Issues Program,'" October 30, 1997. [9711050048]

1726. NUREG/CR-6538, "Evaluation of LOCA With Delayed Loop and Loop With Delayed LOCA Accident Scenarios," U.S.Nuclear Regulatory Commission, July 1997.

1727. Memorandum to W. Travers from A. Thadani, "Resolution of Generic Safety Issue (GSI) - 171, 'ESF Failure from LOOP Subsequent to LOCA,'" December 9, 1998. [9909290137]

1728. Letter to J. Birmingham, et al., (NRC) from W. Foster (The B&W Owners' Group), "Submittal of B&WOG Report 'Evaluation of Potential Boron Dilution following Small Break Loss of Coolant Accident,' 77-5002260-00, September 1998," September 11, 1998. [9809150094]

1729. Letter to W. Lyon (NRC) from J. Link (The B&W Owners' Group), "Transmittal of Report 'Status Report on Return to Criticality Following Small Break Loss of Coolant Accident,' June 1998, Document No. 47-5001848-00," June 15, 1998. [9806220211]

1730. Memorandum to A. Thadani from S. Collins, "Potential Need to Reprioritize/Reopen Aspects of Generic Safety Issue (GSI) 22 Pertaining to Boron Dilution Following Loss-of-Coolant Accidents," February 1, 1999. [9902160085]

1731. Memorandum for W. Russell from D. Morrison, "Prioritization of the NRR Action Plans Submitted to RES on February 13, 1996," June 24, 1996. [9606260260]

1732. Memorandum for W. Minners from E. Beckjord, "Generic Issue No. 165, 'Spring-Actuated Safety and Relief Valve Reliability,'" November 26, 1993. [9312090116]

1733. Memorandum to W. Travers from A. Thadani, "Closeout of Generic Safety Issue 165, Spring-Actuated Safety and Relief Valve Reliability," June 18, 1999.

1734. Memorandum for W. Travers from A. Thadani, "Resolution of Generic Safety Issue B-61, 'Analytically Derived Allowable Equipment Outage Periods,'" March 2, 1999. [9904050209]

1735. Regulatory Guide 1.177, "An Approach for Plant-Specific, Risk-Informed Decisionmaking: Technical Specifications," U.S. Nuclear Regulatory Commission, August 1998. [9809110028]

1736. Memorandum to M. Knapp from L. Shao, "Generic Issue No. 169, 'BWR MSIV Common Mode Failure Due to Loss of Accumulator Pressure,'" March 10, 1998. [9804070430]

1737. Memorandum to NRR Division Directors from D. Matthews, "Director's Quarterly Status Report," January 26, 1999. [9902040247]

1738. Memorandum to L. Shao from D. Morrison, "Generic Issue No. 171, 'ESF Failure from LOOP Subsequent to LOCA,'" June 16, 1995. [9507030081]

1739. Memorandum for J. Murphy from E. Beckjord, "Generic Issue No. 158, 'Performance of Safety-Related Power-Operated Valves Under Design Basis Conditions,'" January 26, 1994. [9402040031]

1740. Memorandum to J. Murphy from E. Beckjord, "Generic Issue No. 167, 'Hydrogen Storage Facility Separation,'" September 29, 1994. [9410250044]

1741. NUREG/CP-0123, "Proceedings of the Second NRC/ASME Symposium on Pump and Valve Testing," U.S. Nuclear Regulatory Commission, July 1992.

1742. AEOD/C603, "A Review of Motor-Operated Valve Performance," Office for Analysis and Evaluation of Operational Data, U.S. Nuclear Regulatory Commission, December 1986. [8612150167]

1743. Memorandum for Chairman Zech, et al., from V. Stello, "Case Study Report - A Review of Motor-Operated Valve Performance (AEOD/C603)," December 10, 1986.

1744. Memorandum to W. Travers from A. Thadani, "Closeout of Generic Safety Issue (GSI) - 158, 'Performance of Safety-Related Power-Operated Valves Under Design Basis Conditions,'" August 2, 1999. [9910040224]

1745. Memorandum for W. Minners from E. Beckjord, "Generic Issue No. 148, 'Smoke Control and Manual Fire-Fighting Effectiveness,'" August 26, 1992. [9208310325]

1746. Memorandum to A. Thadani from T. King, "Staff Review Guidance for Generic Safety Issue (GSI) 148, 'Smoke Control and Manual Fire-Fighting Effectiveness,'" July 22, 1999. [9907270312]

1747. Memorandum to G. Holahan from J. Wermeil, "Closeout of Core Performance Action Plan (TAC Nos. M91256, M91602)," February 16, 1999. [9902190260]

1748. Memorandum to Chairman Jackson, et al., from L. Callan, "Agency Program Plan for High-Burnup Fuel," July 6, 1998. [9808060096]

1749. Memorandum to D. Morrison from W. Russell, "Periodic Review of Low-Priority Generic Issues," April 11, 1996. [9604240169]

1750. Memorandum to B. Sheron from J. Craig, "Periodic Review of Low-Priority Generic Safety Issues," March 5, 1999. [9904060275]

1751. Letter to Seismic Qualification Advisory Committee (SQAC) and Meeting Attendees from G. Sliter and R. Vasudevan (EPRI), "Summary of the EPRI Seismic Equipment Qualification Research Coordination Meeting at ANCO Engineers, Inc., Los Angeles, California, September 19 & 20, 1984," October 10, 1984.

1752. NUREG/CR-5500, "Reliability Study: Westinghouse Reactor Protection System, 1984-1995," U.S. Nuclear Regulatory Commission, (Vol. 2) April 1999.

1753. Memorandum to D. Matthews from E. Rossi, "Issue of Final Report - System Reliability: Westinghouse Reactor Protection System, 1984-1995 (NUREG/CR-5500, Volume 2)," March 24, 1999. [9904060063]

1754. Memorandum for W. Minners from E. Beckjord, "Generic Issue No. 145, 'Actions to Reduce Common Cause Failures,'" February 11, 1992. [9203170332]

1755. NUREG/CR-6268, "Common-Cause Failure Database and Analysis System," U.S. Nuclear Regulatory Commission, (Vols. 1, 2, 3, and 4) June 1998.

1756. NRC Administrative Letter 98-04, "Availability of Common-Cause Failure Database," July 30, 1998. [9807240296]

1757. NRC Regulatory Issue Summary 99-03, "Resolution of Generic Issue 145, Actions to Reduce Common-Cause Failures," October 13, 1999. [9910060044]

1758. Memorandum to W. Travers from A. Thadani, "Resolution of Generic Safety Issue 145, 'Actions to Reduce Common Cause Failures,'" October 18, 1999.

1759. NUREG/CR-5640, "Overview and Comparison of U.S. Commercial Nuclear Power Plants," U.S. Nuclear Regulatory Commission, September 1990.

1760. NUREG/CR-5750, "Rates of Initiating Events at U.S. Nuclear Power Plants: 1987-1995," U.S. Nuclear Regulatory Commission, February 1999.

1761. Memorandum to A. Thadani from E. Beckjord, "Generic Issue 156-6.1, 'Pipe Break Effects on Systems and Components,'" October 31, 1994. [9412070254]

1762. Memorandum for J. Murphy from E. Beckjord, "Generic Issue No. 156.6.1, 'Pipe Break Effects on Systems and Components,'" April 29, 1994. [9406200193]

1763. Memorandum to W. Travers from A. Thadani, "Closeout of Generic Safety Issue 23, 'Reactor Coolant Pump Seal Failure,'" November 8, 1999. [ML993370509]

1764. Memorandum to W. Travers from A. Thadani, "Closeout of Generic Safety Issue 190, 'Fatigue Evaluation of Metal Components for 60-Year Plant Life,'" December 26, 1999.

1765. Memorandum to W. Travers from S. Collins, "Closeout of Generic Safety Issue B-55, 'Improved Reliability of Target Rock Safety Relief Valves,'" December 17, 1999.

1766. Memorandum to W. Travers from A. Thadani, "Proposed Resolution of Generic Issue B-17, 'Criteria for Safety-Related Operator Actions,'" March 27, 2000. [ML003695959]

1767. NRC Regulatory Issue Summary 2000-02, "Closure of Generic Safety Issue 23, Reactor Coolant Pump Seal Failure," February 15, 2000. [ML003680402]

1768. NRC Regulatory Issue Summary 2000-03, "Resolution of Generic Safety Issue 158: Performance of Safety-Related Power-Operated Valves Under Design Basis Conditions," March 15, 2000. [ML003686003]

1769. NRC Regulatory Issue Summary 2000-05, "Resolution of Generic Safety Issue 165, Spring-Actuated Safety and Relief Valve Reliability," March 16, 2000. [ML003689694]

1770. Memorandum for W. Russell from C. Miller, "Licensee Offsite Communication Capabilities; Results of Information Gathering Using Temporary Instruction," September 26, 1996.

1771. Memorandum to C. Rossi from D. Cool, "Status of NMSS Issues in the Generic Issue Management and Control System," June 25, 1999. [9907010194]

1772. Memorandum to C. Rossi from D. Cool, "Closure of NMSS Generic Issue," May 18, 1999.

1773. Memorandum for E. Beckjord from J. Milhoan, "Periodic Review of Low-Priority Generic Safety Issues," June 4, 1993.

1774. Memorandum to A. Thadani from S. Bahadur, "Reprioritization of GSI-71, 'Failure of Resin Demineralizer Systems and Their Effects on Nuclear Power Plant Safety,'" December 20, 2000. [ML003779066]

1775. Memorandum to A. Thadani from M. Mayfield, "Closeout of GSI-152, 'Design Basis for Valves That Might Be Subjected to Significant Blowdown Loads,'" April 4, 2001. [ML010740024]

1776. Memorandum to A. Thadani from J. Rosenthal, "Initial Screening of Candidate Generic Issue 187, 'The Potential Impact of Postulated Cesium Concentration on Equipment Qualification in the Containment Sump,'" April 30, 2001. [ML011210348]

1777. Memorandum to A. Thadani from B. Sheron, "Proposed Generic Safety Issue - The Potential Impact of Postulated Cesium Concentration on Equipment Qualification in the Containment Sump," December 16, 1999. [ML993610109]

1778. Memorandum to W. Travers from A. Thadani, "Closure of Generic Issue 170, Reactivity Transients and Fuel Damage Criteria for High Burnup Fuel," May 4, 2001. [ML011280414]

1779. NUREG/CR-6395, "Enhanced Prioritization of Generic Safety Issue 156-6.1 Pipe Break Effects on Systems and Components Inside Containment," (Draft) September 1999. [ML010460480]

1780. Memorandum to F. Eltawila from D. Cool, "Submittal of Generic Issues for Tracking in the Generic Issue Management Control System (GIMCS)," November 14, 2000. [ML003763127]

1781. NRC Information Notice 99-26, "Safety and Economic Consequences of Misleading Marketing Information," August 24, 1999. [9908180183]

1782. NRC Information Notice 99-09, "Problems Encountered When Manually Editing Treatment Data on the Nucletron MicroSelectron-HDR (New) Model 105.999," March 24, 1999. [9903190227]

1783. NRC Information Notice 99-23, "Safety Concerns Related to Repeated Control Unit Failures of the Nucletron Classic Model High-Dose-Rate Remote Afterloading Brachytherapy Devices," July 6, 1999. [9907010001]

1784. Memorandum to W. Travers from W. Kane, "Closure of Two NMSS Generic Issues," January 26, 2001. [ML010240165]

1785. Memorandum to W. Travers from W. Kane, "Closure of NMSS Generic Issue Relating to Gamma Stereotactic Radiosurgery," February 12, 2001. [ML010390357]

1786. NRC Information Notice 2000-22, "Medical Misadministrations Caused by Human Errors Involving Gamma Stereotactic Radiosurgery (Gamma Knife)," December 18, 2000. [ML003761619]

1787. Memorandum to F. Eltawila from D. Cool, "NMSS Input for Second Quarter FY-2001 Update of the Generic Issue Management Control System," April 12, 2001. [ML011000117]

1788. NUREG-1090, "U.S. Nuclear Regulatory Commission 1983 Annual Report," June 1984.

1789. Memorandum to A. Thadani from S. Collins, "Proposed Generic Safety Issue Related to Secondary Containment Drawdown Time," December 3, 2001. [ML013330114]

1790. NUREG/CR-5640, "Overview and Comparison of U.S. Commercial Nuclear Power Plants," U.S. Nuclear Regulatory Commission, September 1990.

1791. Memorandum to J. Flack from M. Cunningham, "Information Concerning Generic Issue on Combustible Gas Control for PWR Ice Condenser and BWR Mark III Containment Designs," August 15, 2001. [ML012330522]

1792. SECY-00-0198, "Status Report on Study of Risk-Informed Changes to the Technical Requirements of 10 CFR Part 50 (Option 3) and Recommendations on Risk-Informed Changes to 10 CFR 50.44 (Combustible Gas Control)," September 14, 2000. [ML003747699]

1793. NUREG/CR-6427, "Assessment of the DCH Issue for Plants with Ice Condenser Containments," U.S. Nuclear Regulatory Commission, April 2000.

1794. Memorandum to M. Snodderly (NRC) from M. Zavisca, et al. (ERI), "Combustible Gas Control Risk Calculations (DRAFT) for Risk-Informed Alternative to Combustible Gas Control Rule for PWR Ice Condenser, BWR Mark I, and BWR Mark III (10 CFR 50.44)," October 22, 2001.

1795. NUREG/CR-4551, "Evaluation of Severe Accident Risks," U.S. Nuclear Regulatory Commission, (Vol. 1, Rev. 1) December 1993, (Vol. 4, Rev. 1, Part 1) December 1990, (Vol. 7, Rev. 1) March 1993.

1796. Letter Report, "NUREG-1150 Data Base Assessment Program: A Description of the Computational Risk Integration and Conditional Evaluation Tool (CRIC-ET) Software and the NUREG-1150 Data Base," T. D. Brown *et. al.*, March 1995.

1797. Letter to H. VanderMolen (NRC) from V. Mubayi (BNL), "NUREG-1150 Consequence Calculations," July 20, 1994.

1798. NUREG-1742, "Perspectives Gained from the Individual Plant Examination of External Events (IPEEE) Program, Main Report," (Volumes 1 and 2) April 2002.

1799. Memorandum for A. Thadani from J. Wiggins, "Staff Member Concern Regarding the Potential for Resonance Vibrations of Steam Generator Tubes During a Main Steam Line Break Event," June 27, 2000.

1800. Letter to W. Travers from D. Powers, "Differing Professional Opinion on Steam Generator Tube Integrity," February 1, 2001. [ML010780125]

1801 Letter to W. F. Conway (Arizona Public Service Company) from J. B. Martin (NRC), "NRC Inspection Report 50-529/93-14," April 16, 1993. [9305030083]

1802. Letter to A. A. Blind (Consolidated Edison Company of New York, Inc.) from H. J. Miller (NRC), "NRC Augmented Inspection Team - Steam Generator Tube Failure - Report No. 05000247/2000-002," April 28, 2000. [ML011930057]

1803. NUREG/IA-0137, "A Study of Control Room Staffing Levels for Advanced Reactors," U.S. Nuclear Regulatory Commission, November 2000. [ML003774060]

1804. NRC Generic Letter 95-05, "Voltage-Based Repair Criteria for Westinghouse Steam Generator Tubes Affected by Outside Diameter Stress Corrosion Cracking," August 3, 1995. [9507310085]

1805. Memorandum to A. Thadani from N. Chokshi, "Initial Screening of Candidate Generic Issue 188, 'Steam Generator Tube Leaks or Ruptures, Concurrent with Containment Bypass from Main Steam Line or Feedwater Line Breaches," May 21, 2001. [ML011410572]

1806. Memorandum to W. Travers from A. Thadani, "Closeout of Generic Safety Issue 172, 'Multiple System Responses Program,'" January 22, 2002. [ML020230162]

1807. Memorandum to W. Travers from S. Collins, "Resolution of Generic Safety Issue (GSI) 173A, 'Spent Fuel Storage Pool for Operating Facilities,'" December 19, 2001. [ML013520142]

1808. Memorandum to T. King from D. Cool, "NMSS Input for First Quarter FY-2002 Update of the Generic Issue Management Control System," January 16, 2002.

1809. Memorandum to S. Collins from A. Thadani, "Generic Issue 80, 'Pipe Break Effects on Control Rod Drive Hydraulic Lines in the Drywells of BWR MARK I and II Containments,'" February 14, 2003. [ML030550470]

1810. Memorandum to M. Knapp from S. Collins, "Periodic Review of Low-Priority Generic Safety Issues," March 25, 1998. [9803310320]

1811. Memorandum to F. Eltawila from M. Mayfield, "Transfer of Responsibility for Generic Issue 80, 'Pipe Break Effects on Control Rod Drive Hydraulic Lines in the Drywells of BWR MARK I and II Containments,'" April 3, 2001. [ML010470257, ML010670420]

1812. NRC Generic Letter 2003-01, "Control Room Habitability," June 12, 2003. [ML031620248]

1813. Memorandum to A. Thadani from H. Vandermolen, "Results of Initial Screening of Generic Issue 192, 'Secondary Containment Drawdown Time,'" July 2, 2002, [ML021840788]

1814. Memorandum to S. Newberry from J. Grobe,"Potentially Generic Safety Issue - BWR ECCS Suction Concerns," May 10, 2002. [ML021340802]

1815. Memorandum to F. Eltawila from S. Newberry, "Potentially Generic Safety Issue - BWR ECCS Suction Concerns," May 28, 2002. [ML021480496]

1816. NRC Bulletin 96-03, "Potential Plugging of Emergency Core Cooling Suction Strainers by Debris in Boiling-Water Reactors," May 6, 1996.

1817. AEOD-E218, "Potential for Air Binding or Degraded Performance of BWR RHR System Pumps During the Recirculation Phase of a LOCA," U.S. Nuclear Regulatory Commission, March 31, 1982.

1818. NEDE-24539-P, "Mark I Containment Program: Full Scale Test Program Final Report," General Electric Company, April 1979.

1819. Memorandum to J. Dyer from S. Reynolds, "Ad Hoc Review Panel Recommendation Regarding a Differing Professional View on BWR ECCS Suction Concerns," April 8, 2002.

1820. CEN 420-P, Volume 1, "Small Break LOCA Realistic Evaluation Model: Calculational Models," October 1993. [9310080210]

1821. NUREG/CR-2792, "An Assessment of Residual Heat Removal and Containment Spray Pump Performance Under Air and Debris Ingesting Conditions," U.S. Nuclear Regulatory Commission, September 1982.

1822. Memorandum to J. Flack from F. Eltawila, "Information on Generic Issue 195, 'Hydrogen Combustion in Foreign BWR Piping,'" March 13, 2003. [ML030720615]

1823. NRC Information Notice 2002-15, "Hydrogen Combustion Events in Foreign BWR Piping," April 12, 2002 [ML020980466], (Supplement 1) May 6, 2003 [ML031210054].

1824. Memorandum to A. Thadani from F. Eltawila, "Results of Initial Screening of Generic Safety Issue 193, 'BWR ECCS Suction Concerns,'" October 16, 2003. [ML032940708]

1825. Information Notice No. 88-23, "Potential for Gas Binding of High-Pressure Safety Injection Pumps During a Loss-of-Coolant Accident," U.S. Nuclear Regulatory Commission, May 12, 1998 [8805060246], (Supplement 1) January 5, 1989 [8812300186], (Supplement 2) January 31, 1990 [9001250020], (Supplement 3) December 10, 1990 [9012040239], (Supplement 4) December 18, 1992 [9212150017], (Supplement 5) April 23, 1999 [9904200058].

1826. Information Notice No. 89-80, "Potential for Water Hammer, Thermal Stratification, and Steam Binding in High-Pressure Coolant Injection Piping," U.S. Nuclear Regulatory Commission, December 1, 1989. [8911270002]

1827. Information Notice No. 90-64, "Potential for Common-Mode Failure of High Pressure Safety Injection Pumps or Release of Reactor Coolant Outside Containment During a Loss-of-Coolant Accident," U.S. Nuclear Regulatory Commission, October 4, 1990. [9111040293]

1828. NRC Letter to All Nuclear Power Reactor Licensees and Applicants, "Information to Licensees Regarding Two NRC Inspection Manual Sections on Resolution of Degraded and Nonconforming Conditions and on Operability (Generic Letter 91-18)," November 7, 1991 [9111040293], (Revision 1) October 8, 1997 [9710060322].

1829. Memorandum to F. Eltawila from G. Holahan, "Hydrogen Detonations in BWRs," March 11, 2003.

1830. AEOD/E910, "Potential for Gas Binding of High Head Safety Injection Pumps Resulting From Inservice Testing of VCT Outlet Isolation Valves," Office for Analysis and Evaluation of Operational Data, U.S. Nuclear Regulatory Commission, December 1989.

1831. AEOD/T515, "Residual Heat Removal Service Water Booster Pump Air Binding at Brunswick Unit 1," Office for Analysis and Evaluation of Operational Data, U.S. Nuclear Regulatory Commission, December 5, 1985.

1832. AEOD/T927, "Follow-up on Steam Binding of AFW Pumps," Office for Analysis and Evaluation of Operational Data, U.S. Nuclear Regulatory Commission, December 29, 1989.

1833. Memorandum to A. Thadani from J. Flack, "Results of Initial Screening of Generic Issue 195, 'Hydrogen Combustion in Foreign BWR Piping,'" February 23, 2004. [ML040850566]

1834. NUREG/CR-1582, "Seismic Hazard Analysis - Overview and Executive Summary," U.S. Nuclear Regulatory Commission, (Vol. 1) April, 1983.

1835. NUREG/CR-5250, "Seismic Hazard Characterization of 69 Nuclear Plant Sites East of the Rocky Mountains," U.S. Nuclear Regulatory Commission, (Vols. 1 to 8) January 1989.

1836. NUREG-1488, "Revised Livermore Seismic Hazard Estimates for 69 Nuclear Power Plant Sites East of the Rocky Mountains," U.S. Nuclear Regulatory Commission, (Draft) October 1993.

1837. Memorandum to J. Flack from D. Dorman, "Proposed Generic Safety Issue on the Implications of Updated Probabilistic Seismic Hazard Estimates," June 6, 2002. [ML021580151]

1838. NUREG/CR-6372, "Recommendations for Probabilistic Seismic Hazard Analysis: Guidance on Uncertainty and Use of Experts," U.S. Nuclear Regulatory Commission, April, 1997. [9705280207]

1839. NUREG/CR-6607, "Guidance for Performing Probabilistic Seismic Hazard Analysis for a Nuclear Plant Site: Example Application to the Southeastern United States," U.S. Nuclear Regulatory Commission, October 2002.

1840. NUREG/CR-6728, "Technical Basis for Revision of Regulatory Guidance on Design Ground Motions: Hazard- and Risk-consistent Ground Motion Spectra Guidelines," U.S. Nuclear Regulatory Commission, October 2001.

1841. Memorandum to A. Thadani from N. Chokshi, "Results of Initial Screening of Generic Issue 194, 'Implications of Updated Probabilistic Seismic Hazard Estimates,'" September 12, 2003. [ML032680979]

1842. NRC Letter to All Licensees of Operating Plants and Applicants for Operating Licenses and Holders of Construction Permits, "Control of Heavy Loads," (Generic Letter 80-113) December 22, 1980.

1843. NRC Letter to All Licensees of Operating Plants and Applicants for Operating Licenses and Holders of Construction Permits, "Control of Heavy Loads Generic Letter 81-07)," February 3, 1981.

1844. NRC Letter to All Licensees for Operating Reactors, "Completion of Phase II of 'Control of Heavy Loads at Nuclear Power Plants,' NUREG-0612 (Generic Letter 85-11)" June 28, 1985. [8506270216]

1845. Memorandum to A. Thadani from B. Sheron, "Proposed Generic Safety Issue - Potential Risk and Consequences of Heavy Load Drops in Nuclear Power Plants," April 19, 1999. [ML003714155]

1846. NUREG-1774, "A Survey of Crane Operating Experience at U.S. Nuclear Power Plants from 1968 through 2002," U.S. Nuclear Regulatory Commission, July 2003.

1847. NRC Letter to All Holders of Operating Licenses, Applicants for Operating Licenses and Holders of Construction Permits for Power Reactors (Generic Letter 83-42)," December 19, 1983. [8312190365]

1848. NRC Bulletin 96-02, "Movement of Heavy Loads Over Spent Fuel, Over Fuel in the Reactor Core, or Over Safety-Related Equipment," April 11, 1996. [9604080259]

1849. NUREG-0554, "Single-Failure-Proof Cranes for Nuclear Power Plants," U.S. Nuclear Regulatory Commission, May 1979.

1850. Memorandum to J. Dyer from A. Thadani, "Proposed Recommendations for Generic Issue (GI)-186, 'Potential Risk and Consequences of Heavy Load Drops in Nuclear Power Plants,'" November 12, 2003. [ML033170301]

1851. Memorandum to M. Mayfield from F. Eltawila, "Proposed Recommendations for Generic Issue (GI)-186, 'Potential Risk and Consequences of Heavy Load Drops in Nuclear Power Plants,'" November 21, 2003. [ML033250654]

1852. NRC Regulatory Issue Summary 2003-09, "Environmental Qualification of Low-Voltage Instrumentation and Control Cables," May2, 2003. [ML031220078]

1853. Memorandum to W. Travers from R. Borchardt, "Closeout of Generic Safety Issue (GSI) 168, 'Environmental Qualification of Low-Voltage Instrumentation and Control Cables,'" August 14, 2003. [ML032060326]

1854. Memorandum to F. Eltawila from D. Carlson, "Proposed Generic Safety Issue: Boral Degradation," November 4, 2003. [ML033090600]

1855. Memorandum to D. Carlson from F. Eltawila, "Generic Issue 196: Boral Degradation," November 10, 2003, [ML033160580]

1856. "Final Safety Analysis Report for the Holtec International Storage and Transfer Operation Reinforced Module Cask System (HI-STORM Cask System)," Docket 72-1014, July 19, 2000. [ML003777866]

1857. NUREG-75/110, "Safety Evaluation Report for Preliminary Design Approval for GESSAR-238 - Nuclear Island Standard Design," U.S. Nuclear Regulatory Commission, December 1975.

1858. Management Directive 6.4, "Generic Issues Program," U.S. Nuclear Regulatory Commission, December 4, 2001.

1859. SECY-00-0038, "The 1999 NRC Annual Report," February 15, 2000.

1860. Memorandum to F. Eltawila from M. Gamberoni, "Proposed Generic Issue: Iodine Spiking Phenomena," July 22, 2004. [ML042090538]

1861. NUREG-1740, "Voltage-Based Alternative Repair Criteria: A Report to the Advisory Committee on Reactor Safeguards by the Ad Hoc Subcommittee on a Differing Professional Opinion," U.S. Nuclear Regulatory Commission, March 2001.

1862. Letter to W. Travers from M. Bonaca, "Resolution of Certain Items Identified by the ACRS in NUREG-1740, 'Voltage-Based Alternative Repair Criteria,'" May 21, 2004. [ML0414202370]

1863. NUREG-1542, "Performance and Accountability Report," U.S. Nuclear Regulatory Commission.

1864. NUREG/BR-0184, "Regulatory Analysis Technical Information Handbook," U.S. Nuclear Regulatory Commission, January 1997.

1865. Regulatory Guide 1.183, "Alternative Radiological Source Terms for Evaluating Design Basis Accidents at Nuclear Power Reactors," U.S. Nuclear Regulatory Commission, July 2000.

1866. Memorandum to A. Thadani, et al., from M. Hodges, "Reassessment of the Assumptions and Proposed Alternative Method for Determining Radiological Consequences of Main Steam Line Break and Steam Generator Tube Rupture," June 7, 1996. [ML003702950]

1867. Memorandum to C. Paperiello from J. Uhle, "Results of Initial Screening of Generic Issue 197, 'Iodine Spiking Phenomena,'" May 8, 2006. [ML061100331]

1868. Memorandum to L. Reyes from C. Paperiello, "Closure of Generic Issue 80, 'Pipe Break Effects on Control Rod Drive Hydraulic Lines in the Drywells of BWR Mark I and II Containments,'" November 17, 2005. [ML053000179]

1869. Memorandum to L. Reyes from C. Paperiello, "Closure of Generic Safety Issue 185, 'Control of Recriticality Following Small-Break LOCAs in PWRs,'" September 23, 2005. [ML052590135]

1870. Memorandum to L. Reyes from C. Paperiello, "Completion of Generic Safety Issue 188, 'Steam Generator Tube Leaks or Ruptures Concurrent with Containment Bypass from Main Steam or Feedwater Line Breaches,'" December 16, 2005. [ML052150154]

1871. Memorandum to L. Reyes from J. Larkins, "Resolution of Generic Safety Issue 188, 'Steam Generator Tube Leaks or Ruptures Concurrent with Containment Bypass from Main Steamline or Feedwater Line Breaches,'" March 17, 2006. [ML060870089]

APPENDIX B
APPLICABILITY OF NUREG-0933 ISSUES TO OPERATING AND FUTURE REACTOR PLANTS

This appendix contains a listing of those residual GSIs that are applicable to operating and future reactor plants and includes: issues that have been resolved with requirements [I, NOTE 3(a)]; USI, HIGH- and MEDIUM-priority issues scheduled for resolution; nearly-resolved issues scheduled for resolution (NOTES 1 and 2); and issues that are scheduled for prioritization (NOTE 4). The priority designations for all issues are consistent with those listed in Table II of the Introduction. In accordance with 10 CFR 52.47(a)(1)(iv), any future application for design certification must contain proposed technical resolutions for the issues in this listing that are designated USI, HIGH, MEDIUM, NOTE 1, and NOTE 2. (In July 1998, the priority categories NOTES 1 and 2 were eliminated and all GSIs in these categories were given a HIGH priority ranking.[1718]) Also included in this listing are those GSIs that were either prioritized or resolved with no impact on operating reactor plants but contain recommendations for future reactor plants (NOTE 6).

Legend

NOTES: 1	- Possible Resolution Identified for Evaluation (Discontinued 07-06-98)
2	- Resolution Available [Documented in NUREG, NRC Memorandum, SER or equivalent] (Discontinued 07-06-98)
3(a)	- Resolution Resulted in the Establishment of New Regulatory Requirements [Rule, Regulatory Guide, SRP Change, or equivalent]
4	- Issue to be Prioritized in the Future
6	- New Requirements for Future Plants Recommended
B&W	- Babcock & Wilcox Company
CE	- Combustion Engineering Company
GE	- General Electric Company
CONTINUE	- Work on the issue continues in accordance NRC Management Directive 6.4[1858]
HIGH	- High Safety Priority
I	- Resolved TMI Action Plan Item with Implementation of Resolution Mandated by NUREG-0737
MEDIUM	- Medium Safety Priority
MPA	- Multiplant Action
NA	- Not Applicable
TBD	- To Be Determined
USI	- Unresolved Safety Issue
W	- Westinghouse Electric Corporation

Appendix B (Continued)

Action Plan Item/Issue No.	Title	Safety Priority/Status	Affected NSSS Vendor		Operating Plants-MPA No	Operating Plants - Effective Date	Future Plants-Effective Date
			BWR	PWR			
	TMI ACTION PLAN ITEMS						
I.A	OPERATING PERSONNEL						
I.A.1	Operating Personnel and Staffing						
I.A.1.2	Shift Technical Advisor	I	All	All	F-01	09/13/79	09/27/79
I.A.1.2	Shift Supervisor Administrative Duties	I	All	All		09/13/79	09/27/79
I.A.1.3	Shift Manning	I	All	All	F-02	07/31/80	06/26/80
I.A.1.4	Long-Term Upgrading	NOTE 3(a)	All	All		04/28/83	04/28/83
I.A.2	Training and Qualifications of Operating Personnel						
I.A.2.1	Immediate Upgrading of Operator and Senior Operator Training and Qualifications	-	-	-	-	-	-
I.A.2.1(1)	Qualifications - Experience	I	All	All	F-03	03/28/80	03/28/80
I.A.2.1(2)	Training	I	All	All	F-03	03/28/80	03/28/80
I.A.2.1(3)	Facility Certification of Competence and Fitness of Applicants for Operator and Senior Operator Licenses	I	All	All	F-03	03/28/80	03/28/80
I.A.2.3	Administration of Training Programs	I	All	All		03/28/80	03/28/80
I.A.2.6	Long-Term Upgrading of Training and Qualifications	-	-	-	-	-	-
I.A.2.6(1)	Revise Regulatory Guide 1.8	NOTE 3(a)	All	All		TBD	05/--/87
I.A.3	Licensing and Requalification of Operating Personnel						
I.A.3.1	Revise Scope of Criteria for Licensing Examinations	I	All	All		03/28/80	03/28/80
I.A.4	Simulator Use and Development						
I.A.4.1	Initial Simulator Improvement	-	-	-	-	-	-
I.A.4.1(2)	Interim Changes in Training Simulators	NOTE 3(a)	All	All		04/--/81	03/28/81
I.A.4.2	Long-Term Training Simulator Upgrade	-	-	-	-	-	-
I.A.4.2(1)	Research on Training Simulators	NOTE 3(a)	All	All		04/--/87	04/--/87
I.A.4.2(2)	Upgrade Training Simulator Standards	NOTE 3(a)	All	All		04/--/81	04/--/81
I.A.4.2(3)	Regulatory Guide on Training Simulators	NOTE 3(a)	All	All		04/--/81	04/--/81
I.A.4.2(4)	Review Simulators for Conformance to Criteria	NOTE 3(a)	All	All		03/25/87	03/25/87

Appendix B (Continued)

Action Plan Item/Issue No.	Title	Safety Priority/Status	Affected NSSS Vendor		Operating Plants-MPA No	Operating Plants - Effective Date	Future Plants-Effective Date
			BWR	PWR			
I.C	OPERATING PROCEDURES						
I.C.1	Short-Term Accident Analysis and Procedures Revision	-	-	-	-	-	-
I.C.1(1)	Small Break LOCAs	I	All	All		09/13/79	09/13/79
I.C.1(2)	Inadequate Core Cooling	I	All	All	F-04	09/13/79	09/13/79
I.C.1(3)	Transients and Accidents	I	All	All	F-05	09/13/79	09/27/79
I.C.2	Shift and Relief Turnover Procedures	I	All	All		09/13/79	09/27/79
I.C.3	Shift Supervisor Responsibilities	I	All	All		09/13/79	09/27/79
I.C.4	Control Room Access	I	All	All		09/13/79	09/27/79
I.C.5	Procedures for Feedback of Operating Experience to Plant Staff	I	All	All	F-06	05/07/80	06/26/80
I.C.6	Procedures for Verification of Correct Performance of Operating Activities	I	All	All	F-07	10/31/80	10/31/80
I.C.7	NSSS Vendor Review of Procedures	I	All	All		NA	06/26/80
I.C.8	Pilot Monitoring of Selected Emergency Procedures for Near-Term Operating License Applicants	I	All	All		NA	06/26/80
I.C.9	Long-Term Program Plan for Upgrading of Procedures	NOTE 3(a)	All	All		09/13/79	06/--/85
I.D	CONTROL ROOM DESIGN						
I.D.1	Control Room Design Reviews	I	All	All	F-08	06/26/80	06/26/80
I.D.2	Plant Safety Parameter Display Console	I	All	All	F-09	06/26/80	06/26/80
I.D.5	Improved Control Room Instrumentation Research	-	-	-	-	-	-
I.D.5(2)	Plant Status and Post-Accident Monitoring	NOTE 3(a)	All	All		NA	12/--/80
I.F	QUALITY ASSURANCE						
I.F.2	Develop More Detailed QA Criteria	-	-	-	-	-	-
I.F.2(2)	Include QA Personnel in Review and Approval of Plant Procedures	NOTE 3(a)	All	All		NA	07/--/81
I.F.2(3)	Include QA Personnel in All Design, Construction, Installation, Testing, and Operation Activities	NOTE 3(a)	All	All		NA	07/--/81
I.F.2(6)	Increase the Size of Licensees' QA Staff	NOTE 3(a)	All	All		NA	07/--/81
I.F.2(9)	Clarify Organizational Reporting Levels for the QA Organization	NOTE 3(a)	All	All		NA	07/--/81
I.G	PREOPERATIONAL AND LOW-POWER TESTING						
I.G.1	Training Requirements	I	All	All		NA	06/26/80
I.G.2	Scope of Test Program	NOTE 3(a)	All	All		NA	07/--/81

Appendix B (Continued)

Action Plan Item/Issue No.	Title	Safety Priority/Status	Affected NSSS Vendor		Operating Plants-MPA No	Operating Plants - Effective Date	Future Plants-Effective Date
			BWR	PWR			
II.B	CONSIDERATION OF DEGRADED OR MELTED CORES IN SAFETY REVIEW						
II.B.1	Reactor Coolant System Vents	I	All	All	F-10	09/13/79	09/27/79
II.B.2	Plant Shielding to Provide Access to Vital Areas and Protect Safety Equipment for Post-Accident Operation	I	All	All	F-11	09/13/79	09/27/79
II.B.3	Post-Accident Sampling	I	All	All	F-12	09/13/79	09/27/79
II.B.4	Training for Mitigating Core Damage	I	All	All	F-13	03/28/80	03/28/80
II.B.6	Risk Reduction for Operating Reactors at Sites with High Population Densities	NOTE 3(a)	All	All		TBD	NA
II.B.8	Rulemaking Proceeding on Degraded Core Accidents	NOTE 3(a)	All	All		TBD	01/25/85
II.D	REACTOR COOLANT SYSTEM RELIEF AND SAFETY VALVES						
II.D.1	Testing Requirements	I	All	All	F-14	09/13/79	09/27/79
II.D.3	Relief and Safety Valve Position Indication	I	All	All		07/21/79	09/27/79
II.E	SYSTEM DESIGN						
II.E.1	Auxiliary Feedwater System						
II.E.1.1	Auxiliary Feedwater System Evaluation	I	NA	All	F15	03/10/80	03/10/80
II.E.1.2	Auxiliary Feedwater System Automatic Initiation and Flow Indication	I	NA	All	F-16, F-17	09/13/79	09/27/79
II.E.1.3	Update Standard Review Plan and Develop Regulatory Guide	NOTE 3(a)	All	All		NA	07/--/81
II.E.3	Decay Heat Removal						
II.E.3.1	Reliability of Power Supplies for Natural Circulation	I	NA	All		09/13/79	09/27/79
II.E.4	Containment Design						
II.E.4.1	Dedicated Penetrations	I	All	All	F-18	09/13/79	09/27/79
II.E.4.2	Isolation Dependability	I	All	All	F-19	09/13/79	09/27/79
II.E.4.4	Purging	-	-	-	-	-	-
II.E.4.4(1)	Issue Letter to Licensees Requesting Limited Purging	NOTE 3(a)	All	All		11/28/78	NA
II.E.4.4(2)	Issue Letter to Licensees Requesting Information on Isolation Letter	NOTE 3(a)	All	All		10/22/79	NA
II.E.4.4(3)	Issue Letter to Licensees on Valve Operability	NOTE 3(a)	All	All		09/27/79	NA

Appendix B (Continued)

Action Plan Item/Issue No.	Title	Safety Priority/Status	Affected NSSS Vendor		Operating Plants-MPA No	Operating Plants - Effective Date	Future Plants-Effective Date
			BWR	PWR			
II.E.5	Design Sensitivity of B&W Reactors						
II.E.5.1	Design Evaluation	NOTE 3(a)	NA	B&W			
II.E.5.2	B&W Reactor Transient Response Task Force	NOTE 3(a)	NA	B&W			
II.E.6	In Situ Testing of Valves						
II.E.6.1	Test Adequacy Study	NOTE 3(a)	All	All		06/--/89	06/--/89
II.F	INSTRUMENTATION AND CONTROLS						
II.F.1	Additional Accident Monitoring Instrumentation	I	All	All	F-20, F-21 F-22, F-23 F-24, F-25	09/13/79	09/27/79
II.F.2	Identification of and Recovery from Conditions Leading to Inadequate Core Cooling	I	All	All	F-26	070/2/79	09/27/79
II.F.3	Instruments for Monitoring Accident Conditions	NOTE 3(a)	All	All		NA	12/--/80
II.G	ELECTRICAL POWER						
II.G.1	Power Supplies for Pressurizer Relief Valves, Block Valves, and Level Indicators	I	NA	All		09/13/79	09/27/79
II.J	GENERAL IMPLICATIONS OF TMI FOR DESIGN AND CONSTRUCTION ACTIVITIES						
II.J.4	Revise Deficiency Reporting Requirements						
II.J.4.1	Revise Deficiency Reporting Requirements	NOTE 3(a)	All	All		07/31/91	07/31/91
II.K	MEASURES TO MITIGATE SMALL-BREAK LOSS-OF-COOLANT ACCIDENTS AND LOSS-OF-FEEDWATER ACCIDENTS						
II.K.1	IE Bulletins	-	-	-	-	-	-
II.K.1(1)	Review TMI-2 PNs and Detailed Chronology of the TMI-2 Accident	NOTE 3(a)	All	All		03/31/80	NA
II.K.1(2)	Review Transients Similar to TMI-2 That Have Occurred at Other Facilities and NRC Evaluation of Davis-Besse Event	NOTE 3(a)	NA	B&W		03/31/80	NA
II.K.1(3)	Review Operating Procedures for Recognizing, Preventing, and Mitigating Void Formation in Transients and Accidents	NOTE 3(a)	NA	All		03/31/80	NA

Appendix B (Continued)

Action Plan Item/Issue No.	Title	Safety Priority/Status	Affected NSSS Vendor		Operating Plants-MPA No	Operating Plants - Effective Date	Future Plants-Effective Date
			BWR	PWR			
II.K.1(4)	Review Operating Procedures and Training Instructions	NOTE 3(a)	All	All		03/31/80	NA
II.K.1(5)	Safety-Related Valve Position Description	NOTE 3(a)	All	All		03/31/80	03/31/80
II.K.1(6)	Review Containment Isolation Initiation Design and Procedures	NOTE 3(a)	All	All		03/31/80	NA
II.K.1(7)	Implement Positive Position Controls on Valves That Could Compromise or Defeat AFW Flow	NOTE 3(a)	NA	B&W		03/31/80	NA
II.K.1(8)	Implement Procedures That Assure Two Independent 100% AFW Flow Paths	NOTE 3(a)	NA	B&W		03/31/80	NA
II.K.1(9)	Review Procedures to Assure That Radioactive Liquids and Gases Are Not Transferred out of Containment Inadvertently	NOTE 3(a)	All	All		03/31/80	NA
II.K.1(10)	Review and Modify Procedures for Removing Safety-Related Systems from Service	NOTE 3(a)	All	All		03/31/80	03/31/80
II.K.1(11)	Make All Operating and Maintenance Personnel Aware of the Seriousness and Consequences of the Erroneous Actions Leading up to, and in Early Phases of, the TMI-2 Accident	NOTE 3(a)	All	All		03/31/80	NA
II.K.1(12)	One Hour Notification Requirement and Continuous Communications Channels	NOTE 3(a)	All	All			NA
II.K.1(13)	Propose Technical Specification Changes Reflecting Implementation of All Bulletin Items	NOTE 3(a)	All	All		01/01/81	01/01/81
II.K.1(14)	Review Operating Modes and Procedures to Deal with Significant Amounts of Hydrogen	NOTE 3(a)	GE	CE, W		03/31/80	NA
II.K.1(15)	For Facilities with Non-Automatic AFW Initiation, Provide Dedicated Operator in Continuous Communication with CR to Operate AFW	NOTE 3(a)	NA	CE, W		NA	
II.K.1(16)	Implement Procedures That Identify PRZ PORV "Open" Indications and That Direct Operator to Close Manually at "Reset" Setpoint	NOTE 3(a)	NA	CE, W		NA	
II.K.1(17)	Trip PZR Level Bistable so That PZR Low Pressure Will Initiate Safety Injection	NOTE 3(a)	NA	W			
II.K.1(18)	Develop Procedures and Train Operators on Methods of Establishing and Maintaining Natural Circulation	NOTE 3(a)	NA	B&W		NA	
II.K.1(19)	Describe Design and Procedure Modifications to Reduce Likelihood of Automatic PZR PORV Actuation in Transients	NOTE 3(a)	NA	B&W		03/31/80	NA
II.K.1(20)	Provide Procedures and Training to Operators for Prompt Manual Reactor Trip for LOFW, TT, MSIV Closure, LOOP, LOSG Level, and LO PZR Level	NOTE 3(a)	NA	B&W		03/31/80	03/31/80

Appendix B (Continued)

Action Plan Item/Issue No.	Title	Safety Priority/Status	Affected NSSS Vendor		Operating Plants-MPA No	Operating Plants - Effective Date	Future Plants-Effective Date
			BWR	PWR			
II.K.1(21)	Provide Automatic Safety-Grade Anticipatory Reactor Trip for LOFW, TT, or Significant Decrease in SG Level	NOTE 3(a)	NA	B&W		03/31/80	03/31/80
II.K.1(22)	Describe Automatic and Manual Actions for Proper Functioning of Auxiliary Heat Removal Systems When FW System Not Operable	NOTE 3(a)	All	NA		03/31/80	03/31/80
II.K.1(23)	Describe Uses and Types of RV Level Indication for Automatic and Manual Initiation Safety Systems	NOTE 3(a)	All	NA		03/31/80	03/31/80
II.K.1(24)	Perform LOCA Analyses for a Range of Small-Break Sizes and a Range of Time Lapses Between Reactor Trip and RCP Trip	NOTE 3(a)	NA	All		NA	
II.K.1(25)	Develop Operator Action Guidelines	NOTE 3(a)	NA	All		NA	
II.K.1(26)	Revise Emergency Procedures and Train ROs and SROs	NOTE 3(a)	NA	All		NA	
II.K.1(27)	Provide Analyses and Develop Guidelines and Procedures for Inadequate Core Cooling Conditions	NOTE 3(a)	NA	All		NA	
II.K.1(28)	Provide Design That Will Assure Automatic RCP Trip for All Circumstances Where Required	NOTE 3(a)	NA	All		01/01/81	01/01/82
II.K.2	Commission Orders on B&W Plants	-	-	-	-	-	-
II.K.2(1)	Upgrade Timeliness and Reliability of AFW System	NOTE 3(a)	NA	B&W		NA	
II.K.2(2)	Procedures and Training to Initiate and Control AFW Independent of Integrated Control System	NOTE 3(a)	NA	B&W		NA	
II.K.2(3)	Hard-Wired Control-Grade Anticipatory Reactor Trips	NOTE 3(a)	NA	B&W		NA	
II.K.2(4)	Small-Break LOCA Analysis, Procedures and Operator Training	NOTE 3(a)	NA	B&W		NA	
II.K.2(5)	Complete TMI-2 Simulator Training for All Operators	NOTE 3(a)	NA	B&W		NA	
II.K.2(6)	Reevaluate Analysis for Dual-Level Setpoint Control	NOTE 3(a)	NA	B&W		NA	
II.K.2(7)	Reevaluate Transient of September 24, 1977	NOTE 3(a)	NA	B&W		NA	
II.K.2(9)	Analysis and Upgrading of Integrated Control System	I	NA	B&W	F-27	01/01/81	01/01/81
II.K.2(10)	Hard-Wired Safety-Grade Anticipatory Reactor Trips	I	NA	B&W	F-28	01/01/81	01/01/81
II.K.2(11)	Operator Training and Drilling	I	NA	B&W	F-29	01/01/81	01/01/81
II.K.2(13)	Thermal-Mechanical Report on Effect of HPI on Vessel Integrity for Small-Break LOCA With No AFW	I	NA	B&W	F-30	01/01/81	01/01/81
II.K.2(14)	Demonstrate That Predicted Lift Frequency of PORVs and SVs Is Acceptable	I	NA	B&W	F-31	01/01/81	01/01/81
II.K.2(15)	Analysis of Effects of Slug Flow on Once-Through Steam Generator Tubes After Primary System Voiding	I	NA	B&W		06/01/80	06/01/80
II.K.2(16)	Impact of RCP Seal Damage Following Small-Break LOCA With Loss of Offsite Power	I	NA	B&W	F-32	06/01/80	06/01/80

Appendix B (Continued)

Action Plan Item/Issue No.	Title	Safety Priority/Status	Affected NSSS Vendor		Operating Plants-MPA No	Operating Plants - Effective Date	Future Plants-Effective Date
			BWR	PWR			
II.K.2(17)	Analysis of Potential Voiding in RCS During Anticipated Transients	I	NA	B&W	F-33	NA	
II.K.2(19)	Benchmark Analysis of Sequential AFW Flow to Once-Through Steam Generator	I	NA	B&W	F-34	01/01/81	NA
II.K.2(20)	Analysis of Steam Response to Small-Break LOCA That Causes System Pressure to Exceed PORV Setpoint	I	NA	B&W	F-35	01/01/81	NA
II.K.2(21)	LOFT L3-1 Predictions	NOTE 3(a)	NA	B&W		NA	
II.K.3	Final Recommendations of Bulletins and Orders Task Force	-	-	-	-	-	-
II.K.3(1)	Install Automatic PORV Isolation System and Perform Operational Test	I	NA	All	F-36	07/01/81	07/01/81
II.K.3(2)	Report on Overall Safety Effect of PORV Isolation System	I	NA	All	F-37	01/01/81	01/01/81
II.K.3(3)	Report Safety and Relief Valve Failures Promptly and Challenges Annually	I	All	All	F-38	04/01/80	04/01/80
II.K.3(5)	Automatic Trip of Reactor Coolant Pumps	I	NA	All	F-39, G-01	01/01/81	01/01/81
II.K.3(7)	Evaluation of PORV Opening Probability During Overpressure Transient	I	NA	B&W		01/01/81	01/01/81
II.K.3(9)	Proportional Integral Derivative Controller Modification	I	NA	W	F-40	07/01/80	07/01/80
II.K.3(10)	Anticipatory Trip Modification Proposed by Some Licensees to Confine Range of Use to High Power Levels	I	NA	W	F-41		
II.K.3(11)	Control Use of PORV Supplied by Control Components, Inc. Until Further Review Complete	I	All	All			
II.K.3(12)	Confirm Existence of Anticipatory Trip Upon Turbine Trip	I	NA	W	F-42	07/01/80	07/01/80
II.K.3(13)	Separation of HPCI and RCIC System Initiation Levels	I	GE	NA	F-43	10/01/80	10/01/80
II.K.3(14)	Isolation of Isolation Condensers on High Radiation	I	GE	NA	F-44	01/01/81	NA
II.K.3(15)	Modify Break Detection Logic to Prevent Spurious Isolation of HPCI and RCIC Systems	I	GE	NA	F-45	01/01/81	01/01/81
II.K.3(16)	Reduction of Challenges and Failures of Relief Valves - Feasibility Study and System Modification	I	GE	NA	F-46	01/01/81	01/01/81
II.K.3(17)	Report on Outage of ECC Systems - Licensee Report and Technical Specification Changes	I	GE	NA	F-47	01/01/81	01/01/81
II.K.3(18)	Modification of ADS Logic - Feasibility Study and Modification for Increased Diversity for Some Event Sequences	I	GE	NA	F-48	01/01/81	01/01/81
II.K.3(19)	Interlock on Recirculation Pump Loops	I	GE	NA	F-49	01/01/81	NA
II.K.3(20)	Loss of Service Water for Big Rock Point	I	GE	NA		01/01/81	NA

Appendix B (Continued)

Action Plan Item/Issue No.	Title	Safety Priority/Status	Affected NSSS Vendor		Operating Plants-MPA No	Operating Plants - Effective Date	Future Plants-Effective Date
			BWR	PWR			
II.K.3(21)	Restart of Core Spray and LPCI Systems on Low Level - Design and Modification	I	GE	NA	F-50	01/01/81	01/01/81
II.K.3(22)	Automatic Switchover of RCIC System Suction - Verify Procedures and Modify Design	I	GE	NA	F-51	01/01/81	01/01/81
II.K.3(24)	Confirm Adequacy of Space Cooling for HPCI and RCIC Systems	I	GE	NA	F-52	01/01/82	01/01/82
II.K.3(25)	Effect of Loss of AC Power on Pump Seals	I	GE	NA	F-53	01/01/82	01/01/82
II.K.3(27)	Provide Common Reference Level for Vessel Level Instrumentation	I	GE	NA	F-54	10/01/80	10/01/80
II.K.3(28)	Study and Verify Qualification of Accumulators on ADS Valves	I	GE	NA	F-55	01/01/82	01/01/82
II.K.3(29)	Study to Demonstrate Performance of Isolation Condensers with Non-Condensibles	I	GE	NA	F-56	04/01/81	NA
II.K.3(30)	Revised Small-Break LOCA Methods to Show Compliance with 10 CFR 50, Appendix K	I	All	All	F-57	01/01/83	01/01/83
II.K.3(31)	Plant-Specific Calculations to Show Compliance with 10 CFR 50.46	I	All	All	F-58	01/01/83	01/01/83
II.K.3(44)	Evaluation of Anticipated Transients with Single Failure to Verify No Significant Fuel Failure	I	GE	NA	F-59	01/01/81	01/01/81
II.K.3(45)	Evaluate Depressurization with Other Than Full ADS	I	GE	NA	F-60	01/01/81	01/01/81
II.K.3(46)	Response to List of Concerns from ACRS Consultant	I	GE	NA	F-61	07/01/80	07/01/80
II.K.3(57)	Identify Water Sources Prior to Manual Activation of ADS	I	GE	NA	F-62	10/01/80	NA
III.A	EMERGENCY PREPAREDNESS AND RADIATION EFFECTS						
III.A.1	Improve Licensee Emergency Preparedness - Short Term						
III.A.1.1	Upgrade Emergency Preparedness	-	-	-	-	-	-
III.A.1.1(1)	Implement Action Plan Requirements for Promptly Improving Licensee Emergency Preparedness	I	All	All		10/10/79	08/19/80
III.A.1.2	Upgrade Licensee Emergency Support Facilities	-	-	-	-	-	-
III.A.1.2(1)	Technical Support Center	I	All	All	F-63	09/13/79	09/27/79
III.A.1.2(2)	On-Site Operational Support Center	I	All	All	F-64	09/13/79	09/27/79
III.A.1.2(3)	Near-Site Emergency Operations Facility	I	All	All	F-65	09/13/79	09/27/79
III.A.2	Improving Licensee Emergency Preparedness-Long Term						
III.A.2.1	Amend 10 CFR 50 and 10 CFR 50, Appendix E	-	-	-	-	-	-
III.A.2.1(1)	Publish Proposed Amendments to the Rules	NOTE 3(a)	All	All			
III.A.2.1(4)	Revise Inspection Program to Cover Upgraded Requirements	I	All	All	F-67		

Appendix B (Continued)

Action Plan Item/Issue No.	Title	Safety Priority/Status	Affected NSSS Vendor		Operating Plants-MPA No	Operating Plants - Effective Date	Future Plants-Effective Date
			BWR	PWR			
III.A.2.2	Development of Guidance and Criteria	I	All	All	F-68		
III.A.3	Improving NRC Emergency Preparedness						
III.A.3.3	Communications	-	-	-	-	-	-
III.A.3.3(1)	Install Direct Dedicated Telephone Lines	NOTE 3(a)	All	All			
III.A.3.3(2)	Obtain Dedicated, Short-Range Radio Communication Systems	NOTE 3(a)	All	All			
III.D	RADIATION PROTECTION						
III.D.1	Radiation Source Control						
III.D.1.1	Primary Coolant Sources Outside the Containment Structure	-	-	-	-	-	-
III.D.1.1(1)	Review Information Submitted by Licensees Pertaining to Reducing Leakage from Operating Systems	I	All	All		07/02/79	09/27/79
III.D.3	Worker Radiation Protection Improvement						
III.D.3.3	Inplant Radiation Monitoring	-	-	-	-	-	-
III.D.3.3(1)	Issue Letter Requiring Improved Radiation Sampling Instrumentation	I	All	All	F-69	09/13/79	09/27/79
III.D.3.3(2)	Set Criteria Requiring Licensees to Evaluate Need for Additional Survey Equipment	NOTE 3(a)	All	All		09/13/79	09/27/79
III.D.3.3(3)	Issue a Rule Change Providing Acceptable Methods for Calibration of Radiation-Monitoring Instruments	NOTE 3(a)	All	All		09/13/79	09/27/79
III.D.3.3(4)	Issue a Regulatory Guide	NOTE 3(a)	All	All		09/13/79	09/27/79
III.D.3.4	Control Room Habitability	I	All	All	F-70	05/07/80	06/26/80
	TASK ACTION PLAN ITEMS						
A-1	Water Hammer (former USI)	NOTE 3(a)	All	All		NA	03/15/84
A-2	Asymmetric Blowdown Loads on Reactor Primary Coolant Systems (former USI)	NOTE 3(a)	NA	All	D-10	01/--/81	01/--/81
A-3	Westinghouse Steam Generator Tube Integrity (former USI)	NOTE 3(a)	NA	W		04/17/85	04/17/85
A-4	CE Steam Generator Tube Integrity (former USI)	NOTE 3(a)	NA	CE		04/17/85	04/17/85
A-5	B&W Steam Generator Tube Integrity (former USI)	NOTE 3(a)	NA	B&W		04/17/85	04/17/85
A-6	Mark I Short-Term Program (former USI)	NOTE 3(a)	GE	NA		12/--/77	NA
A-7	Mark I Long-Term Program (former USI)	NOTE 3(a)	GE	NA	D-01	08/--/82	08/--/82
A-8	Mark II Containment Pool Dyanmic Loads - Long Term Program (former USI)	NOTE 3(a)	GE	NA		08/--/81	08/--/81
A-9	ATWS (former USI)	NOTE 3(a)	All	All		06/26/84	06/26/84

Appendix B (Continued)

Action Plan Item/Issue No.	Title	Safety Priority/Status	Affected NSSS Vendor		Operating Plants-MPA No	Operating Plants - Effective Date	Future Plants-Effective Date
			BWR	PWR			
A-10	BWR Feedwater Nozzle Cracking (former USI)	NOTE 3(a)	All	NA	B-25	11/--/80	11/--/80
A-11	Reactor Vessel Materials Toughness (former USI)	NOTE 3(a)	All	All		10/--/82	NA
A-12	Fracture Toughness of Steam Generator and Reactor Coolant Pump Supports (former USI)	NOTE 3(a)	NA	All		NA	TBD
A-13	Snubber Operability Assurance	NOTE 3(a)	All	All	B-17, B-22	1980	1980
A-16	Steam Effects on BWR Core Spray Distribution	NOTE 3(a)	GE	NA	D-12	NA	
A-24	Qualification of Class 1E Safety Related Equipment (former USI)	NOTE 3(a)	All	All	B-60	08/--/81	08/--/81
A-25	Non-Safety Loads on Class 1E Power Sources	NOTE 3(a)	All	All		09/--/78	
A-26	Reactor Vessel Pressure Transient Protection (former USI)	NOTE 3(a)	NA	All	B-04	09/--/78	09/--/78
A-28	Increase in Spent Fuel Pool Storage Capacity	NOTE 3(a)	All	All		04/17/78	NA
A-31	RHR Shutdown Requirements (former USI)	NOTE 3(a)	All	All		05/--/78	10/01/78
A-35	Adequacy of Offsite Power Systems	NOTE 3(a)	All	All	B-23	06/02/77	1980
A-36	Control of Heavy Loads Near Spent Fuel (former USI)	NOTE 3(a)	All	All	C-10, C-15	07/--/80	07/--/80
A-39	Determination of Safety Relief Valve Pool Dynamic Loads and Temperature Limits (former USI)	NOTE 3(a)	GE	NA		02/29/80	09/30/80
A-40	Seismic Design Criteria (former USI)	NOTE 3(a)	All	All		TBD	09/--/89
A-42	Pipe Cracks in Boiling Water Reactors (former USI)	NOTE 3(a)	All	NA	B-05	02/--/81	02/--/81
A-43	Containment Emergency Sump Performance (former USI)	NOTE 3(a)	NA	All		NA	11/--/85
A-44	Station Blackout (former USI)	NOTE 3(a)	All	All		TBD	06/--/88
A-46	Seismic Qualification of Equipment in Operating Plants (former USI)	NOTE 3(a)	All	All		02/--/87	NA
A-47	Safety Implications of Control Systems (former USI)	NOTE 3(a)	All	All		09/20/89	09/20/89
A-48	Hydrogen Control Measures and Effects of Hydrogen Burns on Safety Equipment	NOTE 3(a)	All	W		12/--/81	12/--/81
A-49	Pressurized Thermal Shock (former USI)	NOTE 3(a)	NA	All	A-21	TBD	07/--/85
B-10	Behavior of BWR Mark III Containments	NOTE 3(a)	GE	NA		NA	09/--/84
B-36	Develop Design, Testing, and Maintenance Criteria for Atmosphere Cleanup System Air Filtration and Adsorption Units for Engineered Safety Feature Systems and for Normal Ventilation Systems	NOTE 3(a)	All	All		03/--/78	
B-56	Diesel Reliability	NOTE 3(a)	All	All	D-19	06/--/93	06/--/93
B-63	Isolation of Low Pressure Systems Connected to the Reactor Coolant Pressure Boundary	NOTE 3(a)	All	All	B-45	04/20/81	
B-64	Decommissioning of Reactors	NOTE 3(a)	All	All		06/27/88	NA
B-66	Control Room Infiltration Measurements	NOTE 3(a)	All	All		NA	07/--/81
C-1	Assurance of Continuous Long Term Capability of Hermetic Seals on Instrumentation and Electrical Equipment	NOTE 3(a)	All	All		05/27/80	05/27/80

Appendix B (Continued)

Action Plan Item/Issue No.	Title	Safety Priority/Status	Affected NSSS Vendor		Operating Plants-MPA No	Operating Plants - Effective Date	Future Plants-Effective Date
			BWR	PWR			
C-10	Effective Operation of Containment Sprays in a LOCA	NOTE 3(a)	All	All		NA	
C-17	Interim Acceptance Criteria for Solidification Agents for Radioactive Solid Wastes	NOTE 3(a)	All	All		12/27/82	12/27/82
		NEW GENERIC ISSUES					
25.	Automatic Air Header Dump on BWR Scram System	NOTE 3(a)	All	NA		01/09/81	01/09/81
40.	Safety Concerns Associated with Pipe Breaks in the BWR Scram System	NOTE 3(a)	All	NA	B-65	08/31/81	08/31/81
41.	BWR Scram Discharge Volume Systems	NOTE 3(a)	All	NA	B-58	12/09/80	NA
43.	Reliability of Air Systems	NOTE 3(a)	All	All	B-107	08/08/88	08/08/88
45	Inoperability of Instrumentation Due to Extreme Cold Weather	NOTE 3(a)	All	All		NA	09/01/83
51.	Proposed Requirements for Improving the Reliability of Open Cycle Service Water Systems	NOTE 3(a)	All	All	L-913	07/18/89	07/18/89
67.	Steam Generator Staff Actions	-	-	-	-	-	-
67.3.3	Improved Accident Monitoring	NOTE 3(a)	All	All	A-17	12/17/82	12/17/82
70.	PORV and Block Valve Reliability	NOTE 3(a)	NA	All		06/25/90	06/25/90
73.	Detached Thermal Sleeves	NOTE 3(a)	NA	W		NA	
75.	Generic Implications of ATWS Events at the Salem Nuclear Plant	NOTE 3(a)	All	All	B-76, B-77, B-78, B-79, B-80, B-81, B-82, B-85, B-86, B-87, B-88, B-89, B-90, B-91, B-92, B-93	07/08/83	TBD
86.	Long Range Plan for Dealing with Stress Corrosion Cracking in BWR Piping	NOTE 3(a)	All	NA	B-84	TBD	TBD
87.	Failure of HPCI Steam Line Without Isolation	NOTE 3(a)	All	All		06/28/89	06/28/89
89.	Stiff Pipe Clamps	NOTE 6	All	All	NA	NA	TBD
93.	Steam Binding of Auxiliary Feedwater Pumps	NOTE 3(a)	NA	All	B-98	10/--/85	10/--/85
94.	Additional Low Temperature Overpressure Protection for Light Water Reactors	NOTE 3(a)	NA	CE, W		06/25/90	06/25/90
99.	RCS/RHR Suction Line Valve Interlock on PWRs	NOTE 3(a)	NA	All	L-817	10/17/88	10/17/88
103.	Design for Probable Maximum Precipitation	NOTE 3(a)	All	All		10/19/89	10/19/89
118.	Tendon Anchorage Failure	NOTE 3(a)	All	All	NA	NA	07/--/90
124.	Auxiliary Feedwater System Reliability	NOTE 3(a)	All	All		TBD	TBD
128.	Electrical Power Reliability	NOTE 3(a)	All	All		04/29/91	04/29/91
130.	Essential Service Water Pump Failures at Multiplant	NOTE 3(a)	NA	All		09/19/91	09/19/91

Appendix B (Continued)

Action Plan Item/Issue No.	Title	Safety Priority/Status	Affected NSSS Vendor		Operating Plants-MPA No	Operating Plants - Effective Date	Future Plants-Effective Date
			BWR	PWR			
	Sites						
155	Generic Concerns Arising from TMI-2 Cleanup	-	-	-	-	-	-
155.1	More Realistic Source Term Assumptions	NOTE 3(a)	All	All	NA	NA	02/--/95
156	Systematic Evaluation Program	-	-	-	-	-	-
156.6.1	Pipe Break Effects on Systems and Components	HIGH	All	All		TBD	TBD
163.	Multiple Steam Generator Tube Leakage	HIGH	NA	All		TBD	TBD
177.	Vehicle Intrusion at TMI	NOTE 3(a)	All	All		08/01/94	08/01/94
186.	Potential Risk and Consequences of Heavy Load Drops in Nuclear Power Plants	CONTINUE	All	All		TBD	TBD
189.	Susceptibility of Ice Condenser Containments to Early Failure from Hydogen Combustion During A Severe Accident	CONTINUE	All	All		TBD	TBD
191.	Assessment of Debris Accumulation on PWR Sump Performance	HIGH	NA	All		TBD	TBD
193.	BWR ECCS Suction Concerns	CONTINUE	All	NA		TBD	TBD
196.	Boral Degradation	CONTINUE	All	All		TBD	TBD
197.	Hydrogen Combustion in PWR Piping	NOTE 4	NA	All		TBD	TBD
198.	Implications of Updated Probabilistic Seismic Hazard Estimates in Central and Eastern United States+	NOTE 4	All	All		TBD	TBD
200.	Tin Whiskers	NOTE 4	All	All		TBD	TBD
		HUMAN FACTORS ISSUES					
HF1	STAFFING AND QUALIFICATIONS						
HF.1.1	Shift Staffing	NOTE 3(a)	All	All		01/--/84	01/--/84

NRC FORM 335
(9-2004)
NRCMD 3.7

U.S. NUCLEAR REGULATORY COMMISSION

BIBLIOGRAPHIC DATA SHEET

(See instructions on the reverse)

1. REPORT NUMBER
(Assigned by NRC, Add Vol., Supp., Rev., and Addendum Numbers, if any.)

NUREG-0933
Supplement 30

2. TITLE AND SUBTITLE

A Prioritization of Generic Safety Issues

3. DATE REPORT PUBLISHED

MONTH	YEAR
June	2006

4. FIN OR GRANT NUMBER

5. AUTHOR(S)

R. Emrit, et al.

6. TYPE OF REPORT

Technical

7. PERIOD COVERED *(Inclusive Dates)*

07-01-2005 to 06-30-2006

8. PERFORMING ORGANIZATION - NAME AND ADDRESS *(If NRC, provide Division, Office or Region, U.S. Nuclear Regulatory Commission, and mailing address; if contractor, provide name and mailing address.)*

Division of Risk Assessment and Special Projects
Office of Nuclear Regulatory Research
U.S. Nuclear Regulatory Commission
Washington, DC 20555-0001

9. SPONSORING ORGANIZATION - NAME AND ADDRESS *(If NRC, type "Same as above"; if contractor, provide NRC Division, Office or Region, U.S. Nuclear Regulatory Commission, and mailing address.)*

Division of Risk Assessment and Special Projects
Office of Nuclear Regulatory Research
U.S. Nuclear Regulatory Commission
Washington, DC 20555-0001

10. SUPPLEMENTARY NOTES

11. ABSTRACT *(200 words or less)*

The report presents the safety priority rankings for generic safety issues related to nuclear power plants. The purpose of these rankings is to assist in the timely and efficient allocation of NRC resources for the resolution of those safety issues that have a significant potential for reducing risk. The safety priority rankings are HIGH, MEDIUM, LOW, DROP, and CONTINUE, and have been assigned on the basis of risk significance estimates, the ratio of risk to costs and other impacts estimated to result if resolution of the safety issues were implemented, and the consideration of uncertainties and other quantitative and qualitative factors. To the extent practical, estimates are quantitative.

12. KEY WORDS/DESCRIPTORS *(List words or phrases that will assist researchers in locating the report.)*

generic safety issues

13. AVAILABILITY STATEMENT

unlimited

14. SECURITY CLASSIFICATION

(This Page)
unclassified

(This Report)
unclassified

15. NUMBER OF PAGES

16. PRICE

PRINTED ON RECYCLED PAPER

Printed
on recycled
paper

Federal Recycling Program