GE Energy

James C. Kinsey
Project Manager, ESBWR Licensing

PO Box 780 M/C J-70
Wilmington, NC 28402-0780
USA

T 910 675 5057
F 910 362 5057
jim.kinsey@ge.com

Security Notice
This letter forwards Security-Related information in accordance with 10CFR2.390. The balance of this letter may be considered non-Security-Related upon the removal of Enclosure 1.

MFN 06-407
Supplement 1

Docket No. 52-010

February 1, 2007

U.S. Nuclear Regulatory Commission
Document Control Desk
Washington, D.C. 20555-0001

Subject: **Response to Portion of NRC Request for Additional Information Letter No. 38 Related to ESBWR Design Certification Application – Structural Analysis - RAI Numbers 3.8-17 S01, 3.8-24 S01, 3.8-28 S01, 3.8-44 S01, 3.8-59 S01, 3.8-62 S01, 3.8-65 S01, 3.8-69 S01, 3.8-76 S01, 3.8-77 S01, 3.8-79 S01, 3.8-80 S01, 3.8-84 S01, 3.8-95 S01, 3.8-97 S01, 3.8-101 S01, 3.8-102 S01 and 3.8-103 S01 – Supplement 1**

Enclosure 1 contains supplemental responses to the subject NRC RAIs resulting from the December 2006 Structural Follow-up audit. Previous Letter No. 38 RAI responses were submitted in the Reference 1 letter.

Enclosure 1 contains Security-Related information identified by the designation "{{{Security-Related Information - Withhold Under 10 CFR 2.390}}}." GE hereby requests this information be withheld from public disclosure in accordance with the provisions of 10 CFR 2.390. A public version is contained in Enclosure 2.

If you have any questions or require additional information regarding the information provided here, please contact me.

Sincerely,

Kathy Sedney for

James C. Kinsey
Project Manager, ESBWR Licensing

D068

Reference:

1. MFN 06-407, Letter from David H. Hinds to U. S. Nuclear Regulatory Commission, *Response to Portion of NRC Request for Additional Information Letter No. 38 Related to ESBWR Design Certification Application – Structural Analysis - RAI Numbers 3.8-17, 3.8-24, 3.8-28, 3.8-32, 3.8-33 through 3.8-38, 3.8-44, 3.8-59, 3.8-62, 3.8-65, 3.8-69, 3.8-73, 3.8-76, 3.8-77, 3.8-79, 3.8-80, 3.8-81, 3.8-84, 3.8-85, 3.8-86, 3.8-88, 3.8-89, 3.8-92, 3.8-93 through 3.8-97, 3.8-99, 3.8-101, 3.8-102 and 3.8-103*, November 8, 2006

Enclosures:

1. MFN 06-407, Supplement 1 – Response to Portion of NRC Request for Additional Information Letter No. 38 Related to ESBWR Design Certification Application – Structural Analysis - RAI Numbers 3.8-17 S01, 3.8-24 S01, 3.8-28 S01, 3.8-44 S01, 3.8-59 S01, 3.8-62 S01, 3.8-65 S01, 3.8-69 S01, 3.8-76 S01, 3.8-77 S01, 3.8-79 S01, 3.8-80 S01, 3.8-84 S01, 3.8-95 S01, 3.8-97 S01, 3.8-101 S01, 3.8-102 S01 and 3.8-103 S01 – Supplement 1 – Security-Related Information
2. MFN 06-407, Supplement 1 – Response to Portion of NRC Request for Additional Information Letter No. 38 Related to ESBWR Design Certification Application – Structural Analysis - RAI Numbers 3.8-17 S01, 3.8-24 S01, 3.8-28 S01, 3.8-44 S01, 3.8-59 S01, 3.8-62 S01, 3.8-65 S01, 3.8-69 S01, 3.8-76 S01, 3.8-77 S01, 3.8-79 S01, 3.8-80 S01, 3.8-84 S01, 3.8-95 S01, 3.8-97 S01, 3.8-101 S01, 3.8-102 S01 and 3.8-103 S01 – Supplement 1 – Public Version

cc: AE Cubbage USNRC (with enclosures)
GB Stramback GE/San Jose (with enclosures)
eDRF 0000-0062-7988

ENCLOSURE 2

MFN 06-407, SUPPLEMENT 1

Response to Portion of NRC Request for

Additional Information Letter No. 38

Related to ESBWR Design Certification Application

Structural Analysis

RAI Numbers 3.8-17 S01, 3.8-24 S01, 3.8-28 S01, 3.8-44 S01, 3.8-59 S01, 3.8-62 S01, 3.8-65 S01, 3.8-69 S01, 3.8-76 S01, 3.8-77 S01, 3.8-79 S01, 3.8-80 S01, 3.8-84 S01, 3.8-95 S01, 3.8-97 S01, 3.8-101 S01, 3.8-102 S01 and 3.8-103 S01

Public Version

Original Response previously submitted under MFN 06-407 without DCD updates is included to provide historical continuity during review.

NRC RAI 3.8-17

DCD Section 3.8.1.4.1.1.3 states that numerical analytical techniques were used to determine the state of stress and behavior of the containment around the openings at major penetrations. DCD Section 3.8.2.1.3 also states this, and adds, "The analysis of the area around the penetrations consists of a three-dimensional finite element analysis with boundaries extending to a region where the discontinuity effects of the opening are negligible."

Please provide a description of these analyses, including pictures of the finite element models, identification of the loading conditions, the types of analyses conducted, a summary of the results of the analyses, and comparison to Code acceptance criteria. Include this information in DCD Section 3.8 and/or Appendix 3G.

In addition, (1) identify the applicable detailed report/calculation (number, title, revision and date, and brief description of content) that will be available for audit by the staff, and (2) reference this report/calculation in the DCD.

GE Response

Figure 3.8-17(1) is a flow chart for the design of RCCV wall penetrations. This flow chart is the same as DCD Tier 2 Figure 3G.1-39, *Flow Chart for Structural Analysis and Design*, with the following exceptions:

- Stress analyses are performed using a local Finite Element (FE) analysis model which includes the local area around the opening.
- In the local model FE analyses, displacements which are obtained from the RB/FB global model stress analyses are prescribed to the boundary nodes in order to consider the constraints of items not included in the model.
- Local loads which are not considered in the analysis of the global model are considered, if necessary.

Figure 3.8-17(2) is a sketch showing reinforcements in the RCCV wall around a large opening. The area around the opening is reinforced by main hoop and vertical reinforcing bars and additional bars, which are required to resist concentrated stresses around the opening. Additional diagonal bars are installed to add reinforcement in the areas where hoop and vertical bars are terminated.

(1) The applicable detailed report/calculation that will be available for the NRC audit is SER-ESB-045 *Design Report for RCCV Wall around UD Personnel Airlock Opening, Rev.0*, which contains the calculations of the containment around an opening.

(2) Since this information exists as part of GE's internal tracking system, it is not necessary to add it to the DCD.

No DCD change was made in response to this RAI.

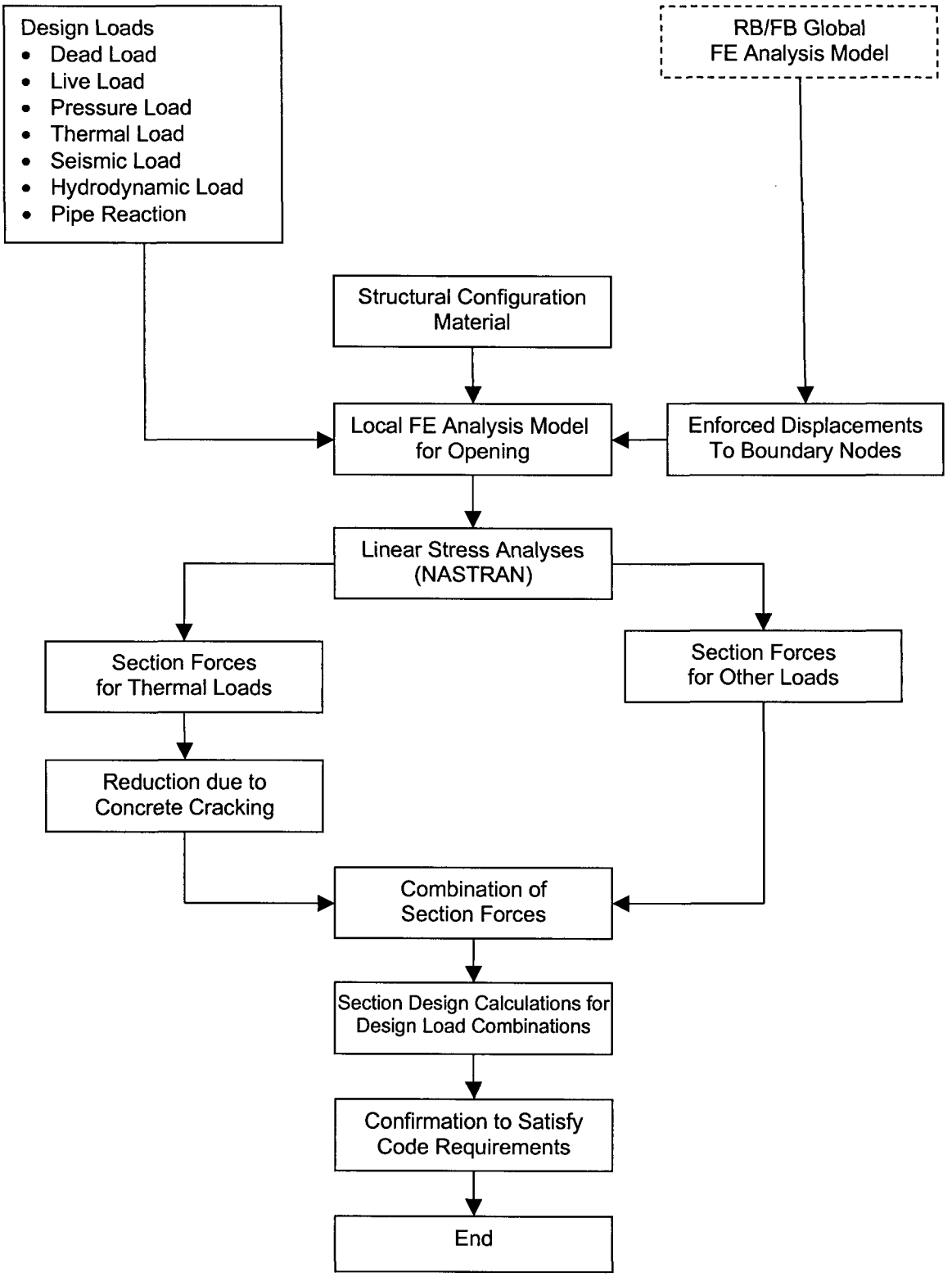

Figure 3.8-17(1) Flow Chart for the Design of RCCV Wall Penetrations

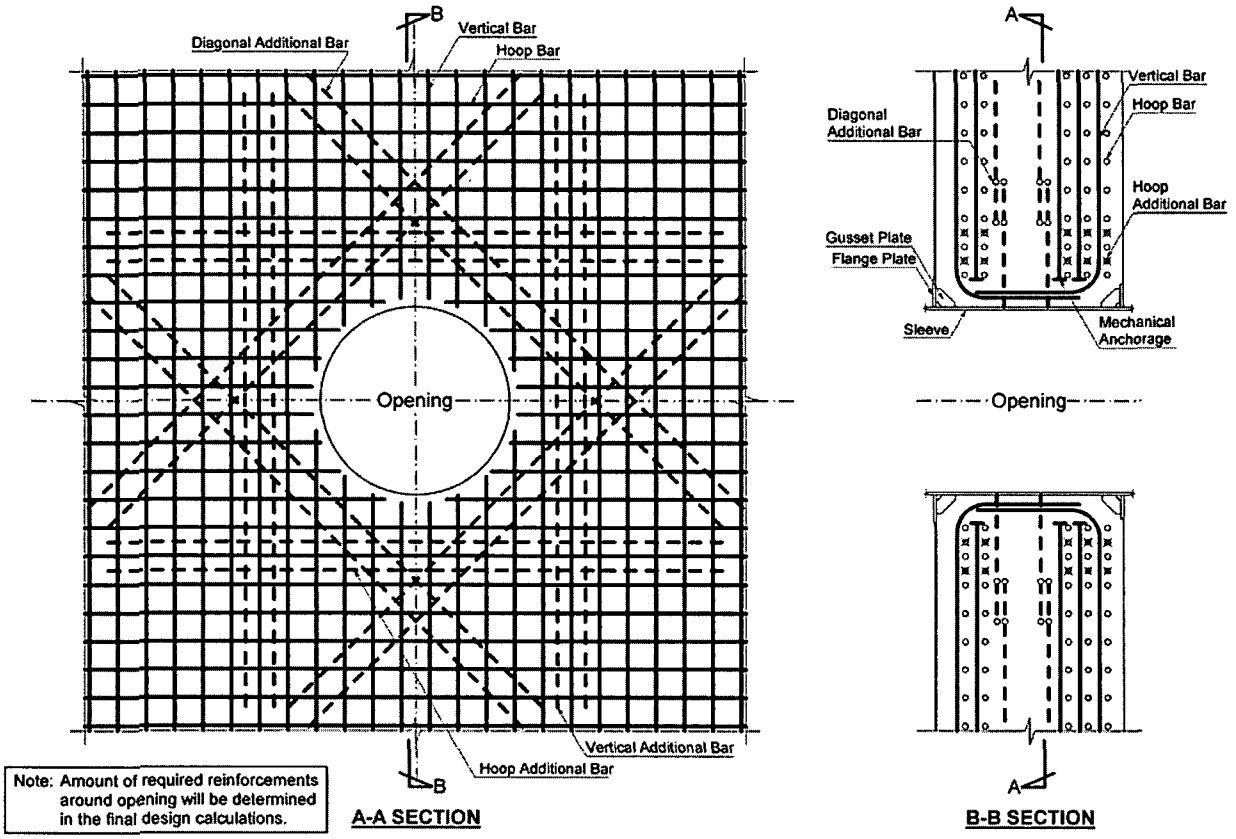

Figure 3.8-17(2) RCCV Wall Penetration Reinforcement Details

NRC RAI 3.8-17, Supplement 1

NRC Assessment Following the December 14, 2006 Audit

Some information requested in the RAI was not provided: figures showing the finite element models used, a summary of the types of analyses, a summary of results of the analyses, and comparison to Code acceptance criteria. Since this is a design certification, a representative design for one or more major penetrations should have been performed, and thus this information should be available. However, Figure 3.8-17(2) has a note indicating that the amount of required reinforcements around opening will be determined in the final design calculations; please explain what this means. Also, as indicated in the RAI, a summary of the information requested in the RAI should be presented in the DCD. If the analysis and design is not completed will this be a COL Action Item, to be reviewed in the future?

Staff needs to review SER-ESB-045 Design Report for RCCV Wall around UD Personnel Airlock Opening, Rev. 0.

During the audit, a draft supplemental response by GE was provided which will revise Figure 3.8-17(2). In addition, the analysis and design for the Upper Drywell Personnel Airlock was completed and available for review.

GE Response

Detailed design calculations of the containment around the UD Personnel Airlock Opening were performed as follows:

The detail of the local FE model of the RCCV wall around the opening is shown in Figure 3.8-17(3). The model is composed of the concrete wall, the steel liner plate and the steel opening sleeve. The concrete wall and steel liner plate are modeled by SHELL elements, and the opening sleeve is modeled by ROD elements. Because the analysis model is the local FE model of the RCCV, the boundary conditions are applied at the periphery of the model and at the connections with the surrounding slab and wall as shown Figure 3.8-17(4). The enforced displacements calculated from the RBFB global FE model analysis results are applied to the nodes shown in Figure 3.8-17(4) at the boundary conditions.

Displacements for several loads at the sections illustrated in Figure 3.8-17(5) are shown in Figures 3.8-17(6) through 3.8-17(9). Figures 3.8-17(11) through 3.8-17(14) show the element forces and moments at the sections shown in Figure 3.8-17(10). Element forces and moments illustrated in the figures are defined in relation to the element coordinate system shown in Figure 3.8-17(15).

Element forces and moments of individual loads were combined in accordance with the load combinations shown in Table 3.8-17(1) for section design calculations.

Figures 3.8-17(16) through 3.8-17(18) show typical sections of the RCCV wall around the UD Personnel Airlock Opening. Primary reinforcements are arranged orthogonally in two directions in each section. In addition, diagonal reinforcements are arranged at four corners.

Based on the rebar arrangement shown in Figures 3.8-17(16) through 3.8-17(18), stresses in the RCCV wall around the opening were evaluated. The calculated stresses are less than the allowable values specified in ASME Code Section III, Division 2, Subsection CC- 3000.

A representative sketch of the reinforcement around equipment hatch/personnel airlock openings will be added to DCD Tier 2 as Figure 3.8-2 as stated in the response to NRC RAI 3.8-3, Supplement 3.

DCD Impact

No DCD change is required in response to this RAI Supplement.

Table 3.8-17(1) Design Load Combinations for RCCV Wall Around UD Personnel Airlock Opening

					Combination No. In DCD	Live Load				Pressure Load								Thermal Load										Seismic Load	Pipe Reaction		Hydrodynamic Load							Acceptance Criteria
													LOCA							LOCA (GDCS Condition2*1)												SRV		PS	CO		CH		
						Dead Load	Normal Operation	Snow Load	Soil Pressure (Static)	Normal Operation	Test (Max.)	Test (Diff.)	After 5 seconds	After 6 minutes	After 10 hours	After 72 hours	HELB in MS Tunnel	Normal Operation		After 5 sec.		After 6 minutes		After 10 hours		After 72 hours		Seismic Load	SRV	LOCA	Positive	Negative		Positive	Negative	Positive	Negative	
																		Summer	Winter	Summer	Winter	Summer	Winter	Summer	Winter	Summer	Winter												
						DLO	LLO	SNL	SPO	POL	PTL1	PTL2	PL1	PL2	PL3	PL4	PLMS	TLS0	TLW0	TLS5	TLW5	TLS6	TLW6	TLS7	TLW7	TLS8	TLW8	KSO	RLS	RLL	HOS1	HOS2	HLPS	HLO1	HLO2	HLC1	HLC2	
CV-1	Test																																						
	Maximum Pressure			1100	CV-1	1.0	1.0	1.0	1.0		1.0																											S
	Differential Pressure			1200	NA	1.0	1.0	1.0	1.0			1.0																											S
CV-3	Normal Operation																																						
		Summer		2010	NA	1.0	1.0	1.0	1.0	1.0								1.0																					S
			SRVPos.	2011	NA	1.0	1.0	1.0	1.0	1.0								1.0											1.0		1.0								S
			SRVNeg.	2012	NA	1.0	1.0	1.0	1.0	1.0								1.0											1.0			1.0							S
		Winter		2020	NA	1.0	1.0	1.0	1.0	1.0									1.0																				S
			SRVPos.	2021	NA	1.0	1.0	1.0	1.0	1.0									1.0										1.0		1.0								S
			SRVNeg.	2022	NA	1.0	1.0	1.0	1.0	1.0									1.0										1.0			1.0							S
		w/o Temp		2000	NA	1.0	1.0	1.0	1.0	1.0																													S
			SRVPos.	2001	NA	1.0	1.0	1.0	1.0	1.0																			1.0		1.0								S
			SRVNeg.	2002	NA	1.0	1.0	1.0	1.0	1.0																			1.0			1.0							S

Note *1: GDCS Pool Water Depth is 305mm (12in.).

Table 3.8-17(1) Design Load Combinations for RCCV Wall Around UD Personnel Airlock Opening (Continued)

						Combination No. in DCD	Live Load				Pressure Load									Thermal Load											Seismic Load	Pipe Reaction		Hydrodynamic Load								Acceptance Criteria
							Dead Load	Normal Operation	Snow Load	Soil Pressure (Static)	Normal Operation	Test (Max.)	Test (Diff.)	LOCA After 5 seconds	LOCA After 6 minutes	LOCA After 10 hours	LOCA After 72 hours	HELB in MS Tunnel	Normal Operation Summer	Normal Operation Winter	LOCA (GDCS Condition2*1) After 5 sec. Summer	After 5 sec. Winter	After 6 minutes Summer	After 6 minutes Winter	After 10 hours Summer	After 10 hours Winter	After 72 hours Summer	After 72 hours Winter		SRV	LOCA	SRV Positive	SRV Negative	PS	CO Positive	CO Negative	CH Positive	CH Negative	
							DLO	LLO	SNL	SPO	POL	PTL1	PTL2	PL1	PL2	PL3	PL4	PLMS	TLS0	TLW0	TLS5	TLW5	TLS6	TLW6	TLS7	TLW7	TLS8	TLW8	KSO	RLS	RLL	HOS1	HOS2	HLPS	HLO1	HLO2	HLC1	HLC2	
CV-7	Abnormal ;LOCA (1.5P)																																									
	5 sec. After	GDCS Condition2	Summer	SRVPos.	6131	NA	1.0	1.0	1.0	1.0				1.5							1.0									1.0	1.0	1.0		1.5							U
				SRVNeg.	6132	NA	1.0	1.0	1.0	1.0				1.5							1.0									1.0	1.0		1.0	1.5							U
			Winter	SRVPos.	6141	NA	1.0	1.0	1.0	1.0				1.5								1.0								1.0	1.0	1.0		1.5							U
				SRVNeg.	6142	NA	1.0	1.0	1.0	1.0				1.5								1.0								1.0	1.0		1.0	1.5							U
			w/o Temp	SRVPos.	6101	NA	1.0	1.0	1.0	1.0				1.5																1.0	1.0	1.0		1.5							U
				SRVNeg.	6102	NA	1.0	1.0	1.0	1.0				1.5																1.0	1.0		1.0	1.5							U
	6 min. After	GDCS Condition2	Summer	(CO+SRV)Pos.	6231	NA	1.0	1.0	1.0	1.0					1.5								1.0							1.0	1.0	1.0			1.5						U
				(CO+SRV)Neg.	6232	NA	1.0	1.0	1.0	1.0					1.5								1.0							1.0	1.0		1.0			1.5					U
			Winter	(CO+SRV)Pos.	6241	CV-7a	1.0	1.0	1.0	1.0					1.5									1.0						1.0	1.0	1.0			1.5						U
				(CO+SRV)Neg.	6242	NA	1.0	1.0	1.0	1.0					1.5									1.0						1.0	1.0		1.0			1.5					U
			w/o Temp	(CO+SRV)Pos.	6201	NA	1.0	1.0	1.0	1.0					1.5															1.0	1.0	1.0			1.5						U
				(CO+SRV)Neg.	6202	NA	1.0	1.0	1.0	1.0					1.5															1.0	1.0		1.0			1.5					U
	10 hours After	GDCS Condition2	Summer	(CH+SRV)Pos.	6331	NA	1.0	1.0	1.0	1.0						1.5									1.0					1.0	1.0	1.0					1.5			U
				(CH+SRV)Neg.	6332	NA	1.0	1.0	1.0	1.0						1.5									1.0					1.0	1.0		1.0						1.5	U
			Winter	(CH+SRV)Pos.	6341	NA	1.0	1.0	1.0	1.0						1.5										1.0				1.0	1.0	1.0					1.5			U
				(CH+SRV)Neg.	6342	NA	1.0	1.0	1.0	1.0						1.5										1.0				1.0	1.0		1.0						1.5	U
			w/o Temp	(CH+SRV)Pos.	6301	NA	1.0	1.0	1.0	1.0						1.5														1.0	1.0	1.0					1.5			U
				(CH+SRV)Neg.	6302	NA	1.0	1.0	1.0	1.0						1.5														1.0	1.0		1.0						1.5	U
	72 hours After	GDCS Condition2	Summer	(CH+SRV)Pos.	6431	NA	1.0	1.0	1.0	1.0							1.5										1.0			1.0	1.0	1.0					1.5			U
				(CH+SRV)Neg.	6432	NA	1.0	1.0	1.0	1.0							1.5										1.0			1.0	1.0		1.0						1.5	U
			Winter	(CH+SRV)Pos.	6441	CV-7b	1.0	1.0	1.0	1.0							1.5											1.0		1.0	1.0	1.0					1.5			U
				(CH+SRV)Neg.	6442	NA	1.0	1.0	1.0	1.0							1.5											1.0		1.0	1.0		1.0						1.5	U
			w/o Temp	(CH+SRV)Pos.	6401	NA	1.0	1.0	1.0	1.0							1.5													1.0	1.0	1.0					1.5			U
				(CH+SRV)Neg.	6402	NA	1.0	1.0	1.0	1.0							1.5													1.0	1.0		1.0						1.5	U
	HELB in MS Tunnel		Summer		6511	NA	1.0	1.0	1.0	1.0								1.5	1.0																					U
			Winter		6521	NA	1.0	1.0	1.0	1.0								1.5		1.0																				U
			w/o Temp		6501	NA	1.0	1.0	1.0	1.0								1.5																						U

Note *1: GDCS Pool Water Depth is 305mm (12in.).

Table 3.8-17(1) Design Load Combinations for RCCV Wall Around UD Personnel Airlock Opening (Continued)

						Combination No. in DCD	Live Load				Pressure Load								Thermal Load										Seismic Load	Pipe Reaction		Hydrodynamic Load								Acceptance Criteria
														LOCA					Normal Operation		LOCA (GDCS Condition2*1)											SRV		PS	CO		CH		
							Dead Load	Normal Operation	Snow Load	Soil Pressure (Static)	Normal Operation	Test (Max.)	Test (Diff.)	After 5 seconds	After 6 minutes	After 10 hours	After 72 hours	HELB in MS Tunnel	Summer	Winter	After 5 sec.		After 6 minutes		After 10 hours		After 72 hours			SRV	LOCA	Positive	Negative		Positive	Negative	Positive	Negative	
							DLO	LLO	SNL	SPO	POL	PTL1	PTL2	PL1	PL2	PL3	PL4	PLMS	TLS0	TLW0	TLS5	TLW5	TLS6	TLW6	TLS7	TLW7	TLS8	TLW8	KSO	RLS	RLL	HOS1	HOS2	HLPS	HLO1	HLO2	HLC1	HLC2	
CV-11	Abnormal/Extreme Environmental																																								
	5 sec. After	GDCS	Summer	SRVPos.	7131	NA	1.0	1.0	0.75	1.0				1.0							1.0								1.0	1.0	1.0	1.0		1.0					U
		Condition2	Winter	SRVPos.	7141	NA	1.0	1.0	0.75	1.0				1.0								1.0							1.0	1.0	1.0	1.0		1.0					U
			w/o Temp	SRVPos.	7101	NA	1.0	1.0	0.75	1.0				1.0															1.0	1.0	1.0	1.0		1.0					U
	6 min. After	GDCS	Summer	(CO+SRV)Pos.	7231	NA	1.0	1.0	0.75	1.0					1.0								1.0						1.0	1.0	1.0	1.0			1.0				U
		Condition2	Winter	(CO+SRV)Pos.	7241	CV-11a	1.0	1.0	0.75	1.0					1.0									1.0					1.0	1.0	1.0	1.0			1.0				U
			w/o Temp	(CO+SRV)Pos.	7201	NA	1.0	1.0	0.75	1.0					1.0														1.0	1.0	1.0	1.0			1.0				U
	10 hours After	GDCS	Summer	(CH+SRV)Pos.	7331	NA	1.0	1.0	0.75	1.0						1.0									1.0				1.0	1.0	1.0	1.0					1.0		U
		Condition2	Winter	(CH+SRV)Pos.	7341	NA	1.0	1.0	0.75	1.0						1.0										1.0			1.0	1.0	1.0	1.0					1.0		U
			w/o Temp	(CH+SRV)Pos.	7301	NA	1.0	1.0	0.75	1.0						1.0													1.0	1.0	1.0	1.0					1.0		U
	72 hours Afte	GDCS	Summer	(CH+SRV)Pos.	7431	NA	1.0	1.0	0.75	1.0							1.0										1.0		1.0	1.0	1.0	1.0					1.0		U
		Condition2	Winter	(CH+SRV)Pos.	7441	CV-11b	1.0	1.0	0.75	1.0							1.0											1.0	1.0	1.0	1.0	1.0					1.0		U
			w/o Temp	(CH+SRV)Pos.	7401	NA	1.0	1.0	0.75	1.0							1.0												1.0	1.0	1.0	1.0					1.0		U
	HELB		Summer		7511	NA	1.0	1.0	0.75	1.0								1.0	1.0										1.0										U
	in MS Tunnel		Winter		7521	NA	1.0	1.0	0.75	1.0								1.0		1.0									1.0										U
			w/o Temp		7501	NA	1.0	1.0	0.75	1.0								1.0											1.0										U

Note *1: GDCS Pool Water Depth is 305mm (12in.).

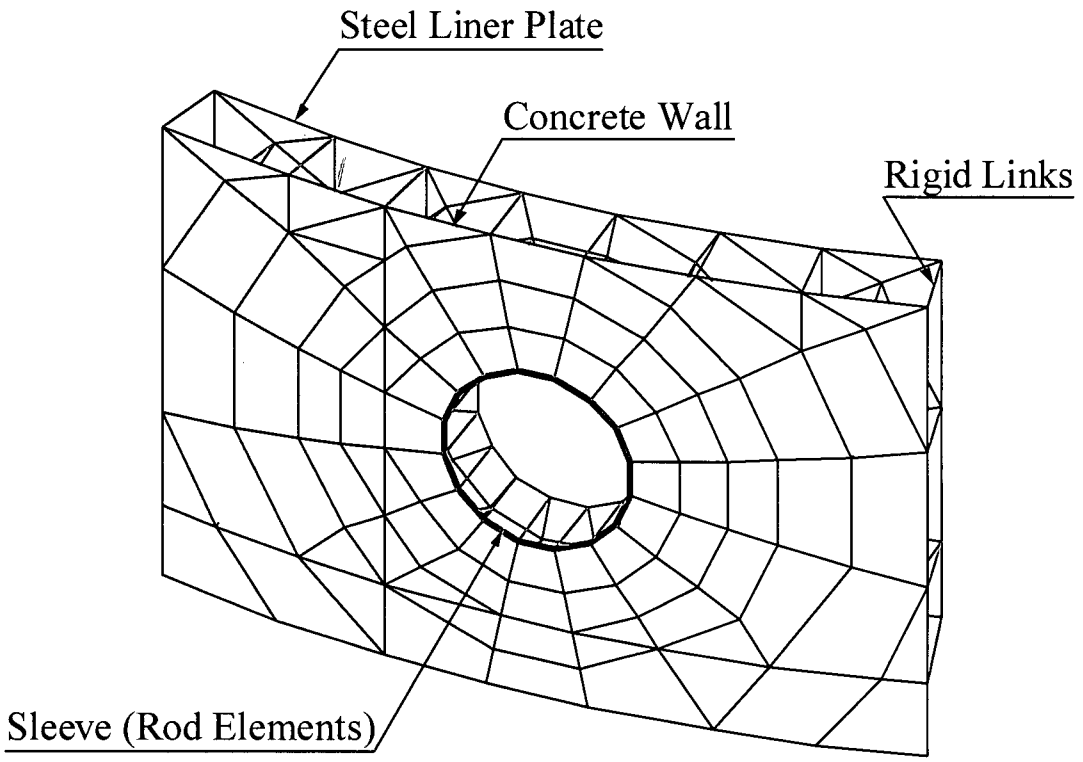

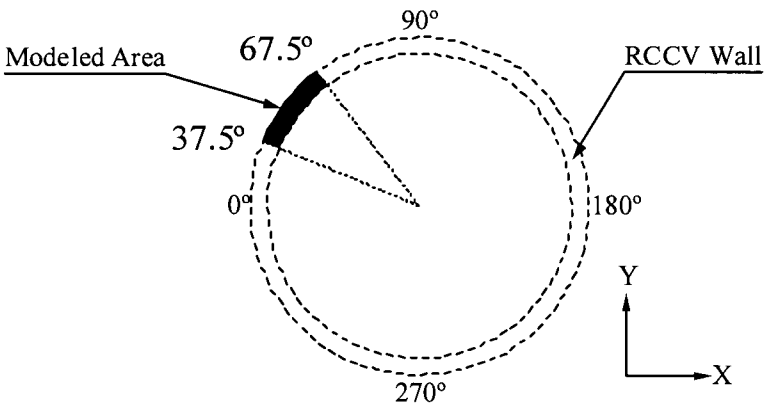

Figure 3.8-17(3) Details of Local FE Model of RCCV Wall Around UD Personnel Airlock Opening

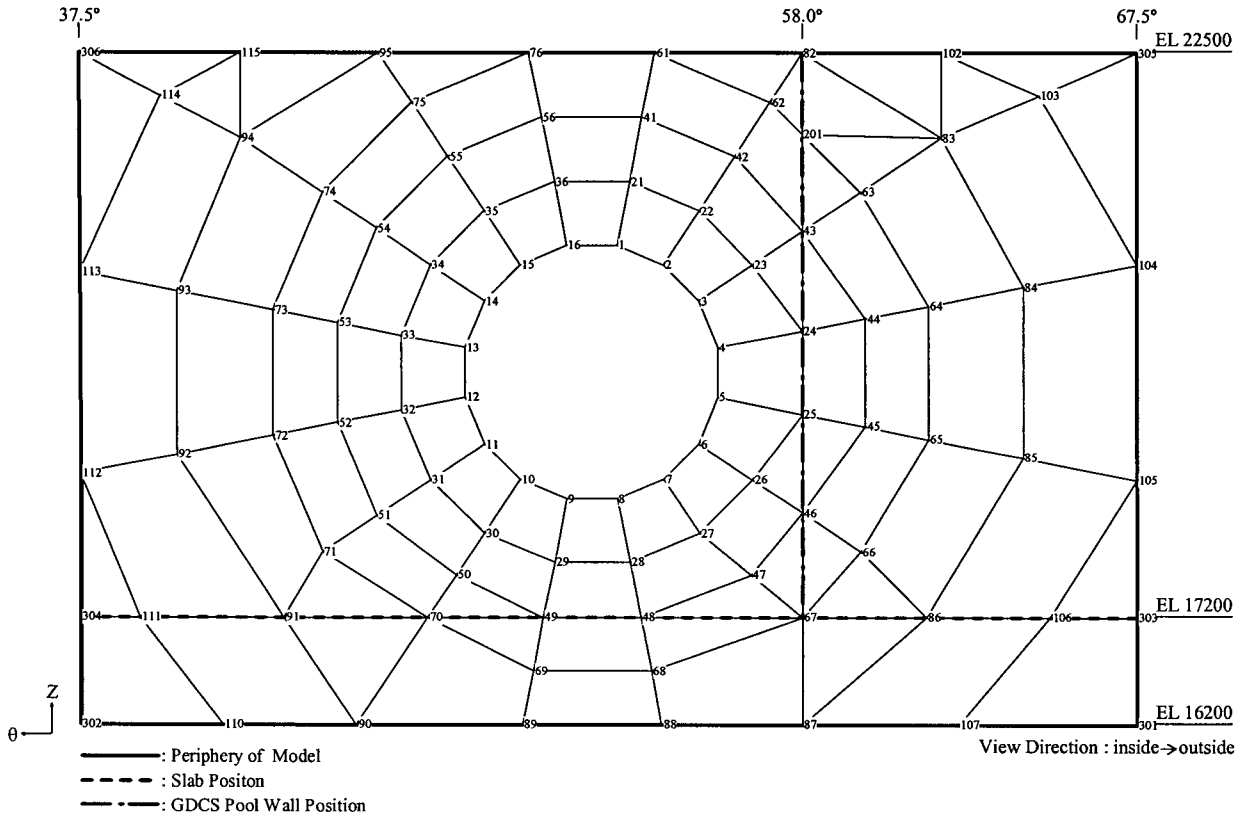

Figure 3.8-17(4) Boundary Conditions of FE Model

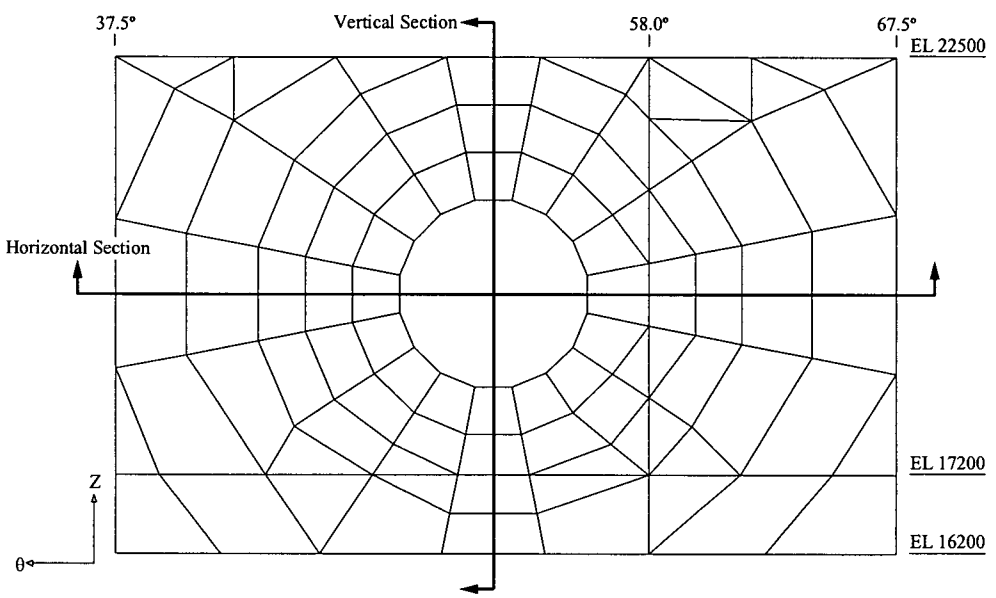

Figure 3.8-17(5) Sections Where Displacements Are Shown

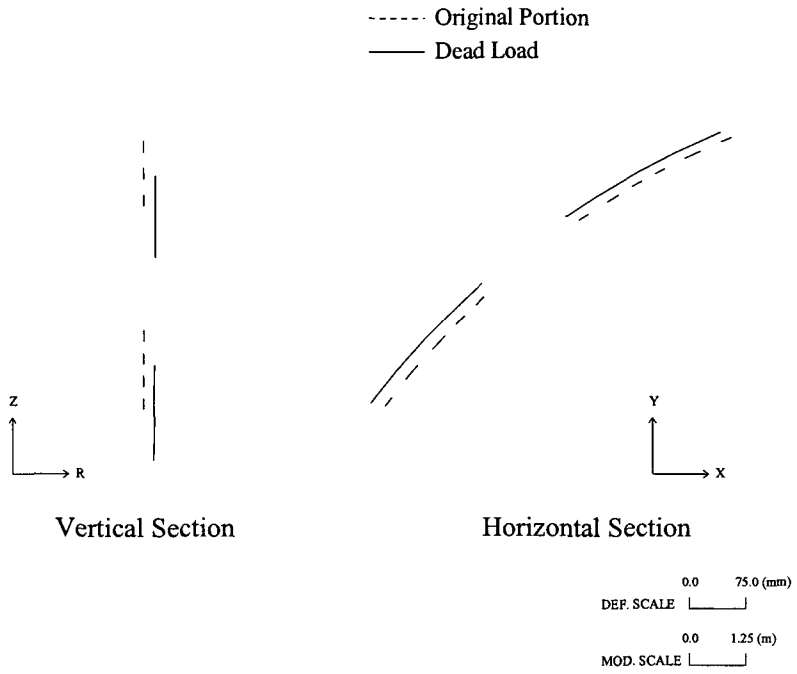

Figure 3.8-17(6) Section Displacement (Dead Load)

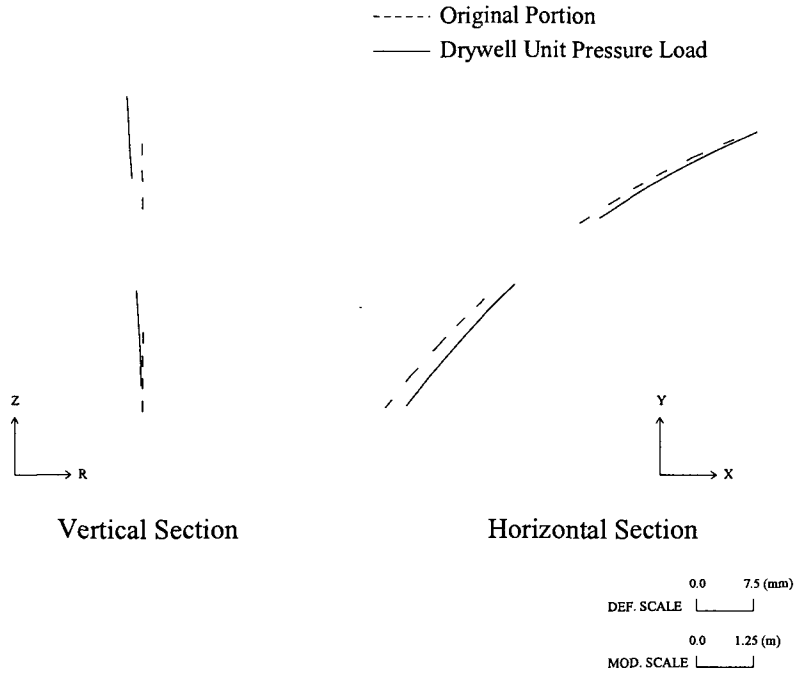

Figure 3.8-17(7) Section Displacement (Drywell Unit Pressure: 1MPa)

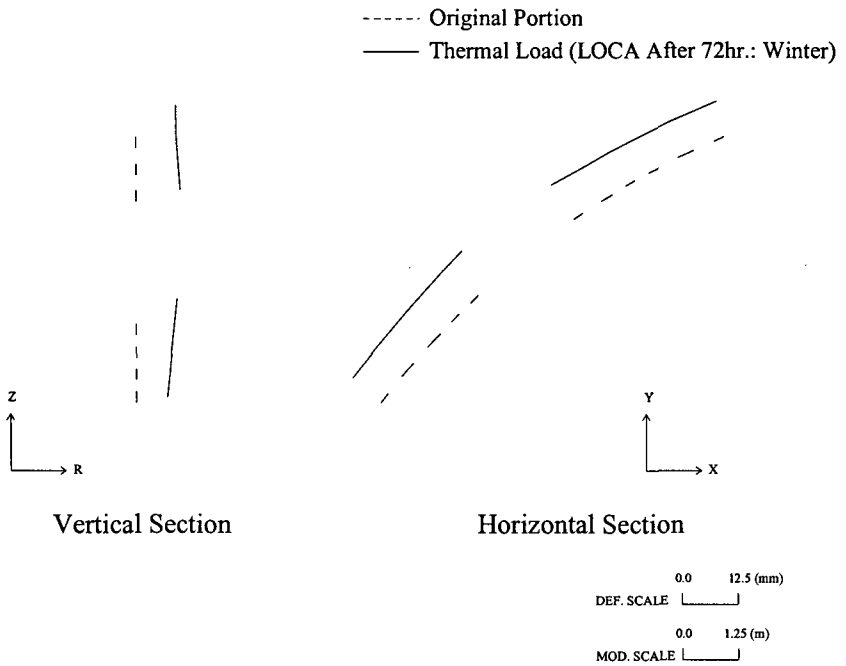

Figure 3.8-17(8) Section Displacement (Thermal Load: LOCA after 72hr. Winter)

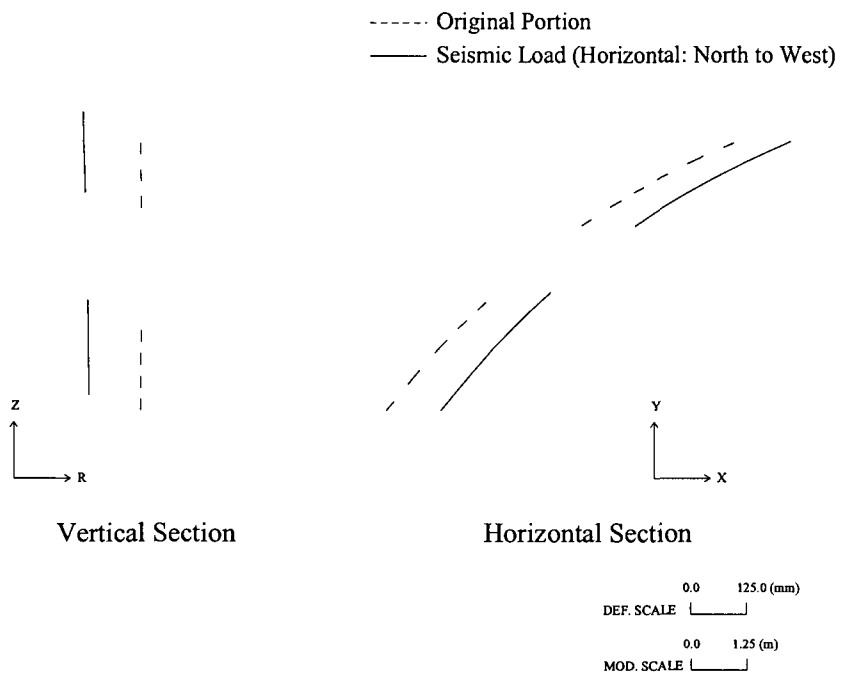

Figure 3.8-17(9) Section Displacement (Seismic Load: Horizontal North to South)

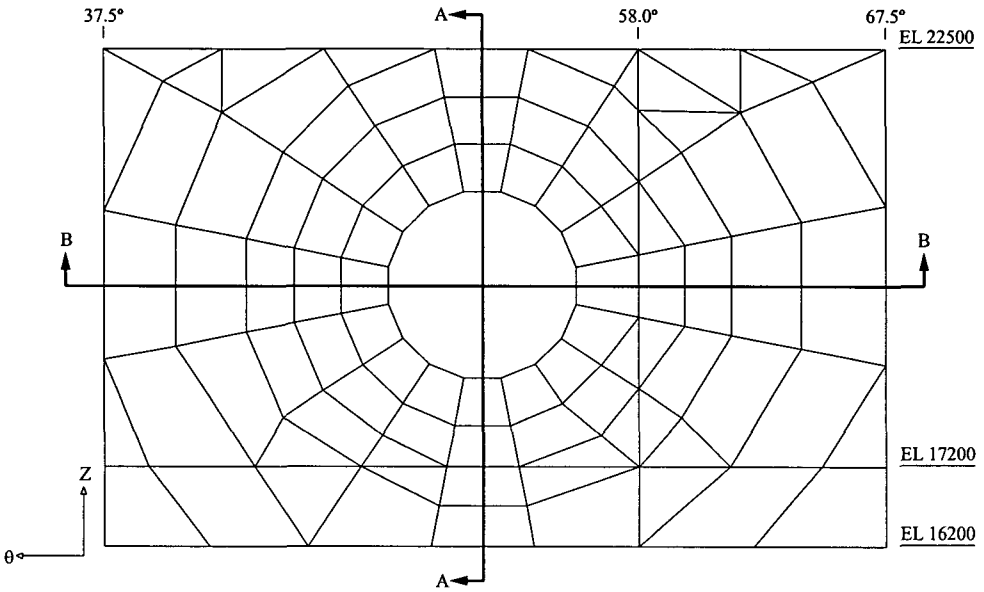

Figure 3.8-17(10) Sections Where Element Forces Are Shown

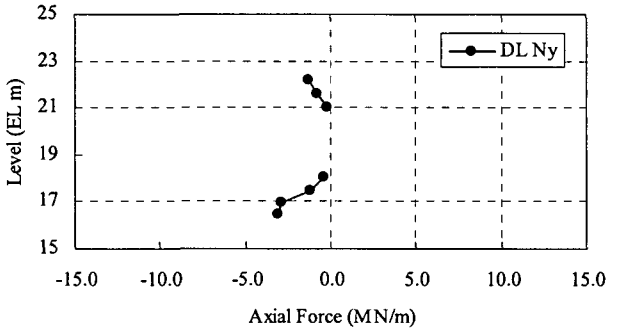

Section A-A Ny

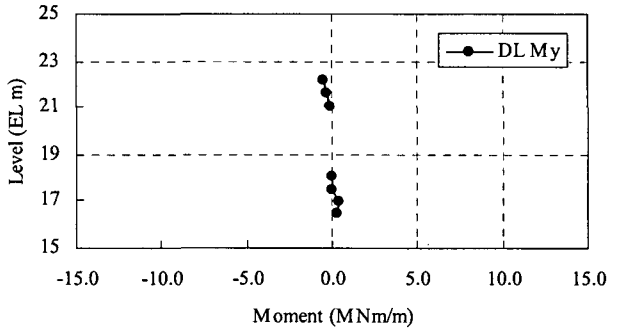

Section A-A My

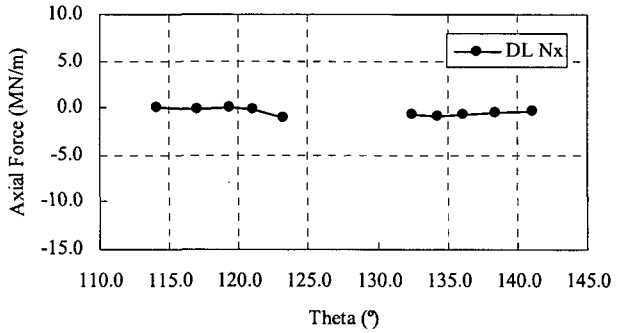

Section B-B Nx

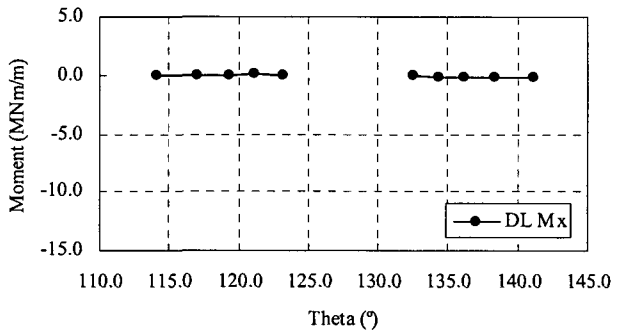

Section B-B My

Figure 3.8-17(11) Element Forces and Moments (Dead Load)

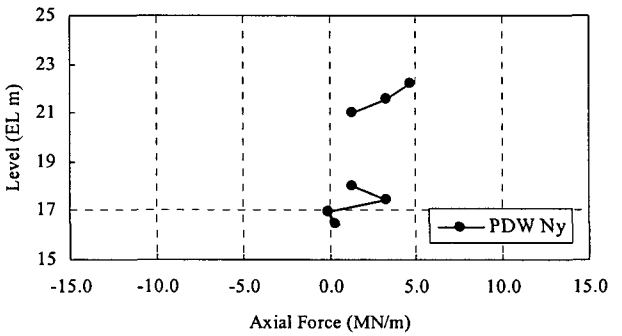

Section A-A Ny

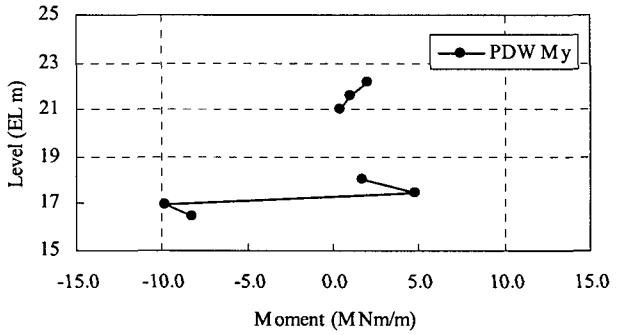

Section A-A My

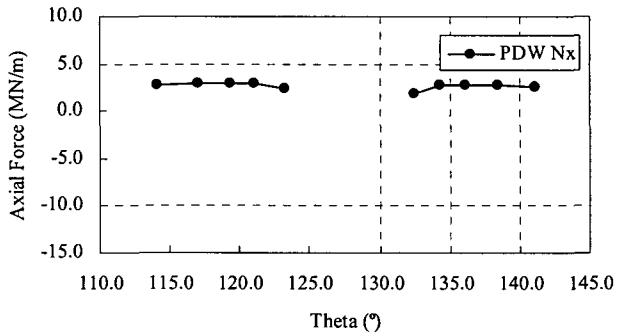

Section B-B Nx

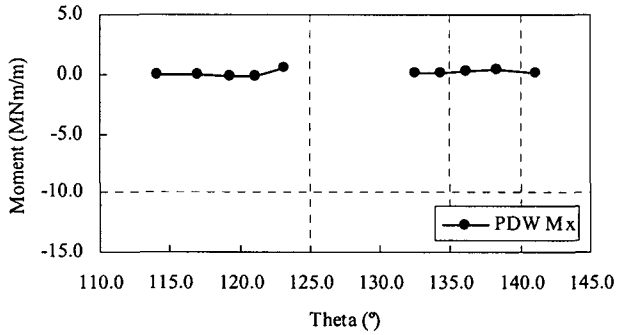

Section B-B My

Figure 3.8-17(12) Element Forces and Moments (Drywell Unit Pressure: 1MPa)

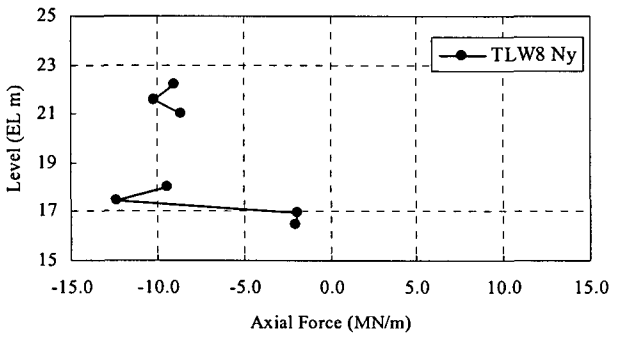

Section A-A Ny

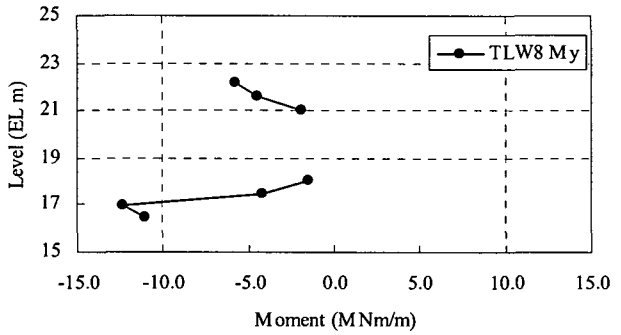

Section A-A My

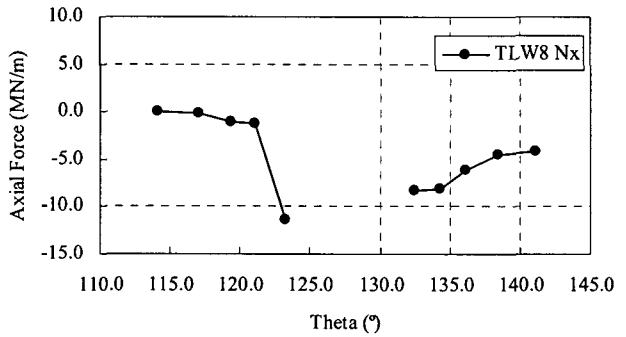

Section B-B Nx

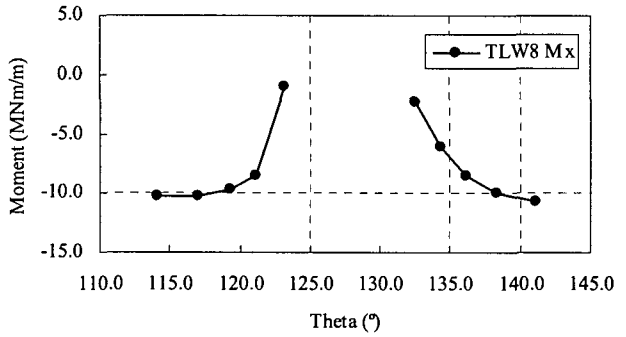

Section B-B My

Figure 3.8-17(13) Element Forces and Moments (Thermal Load: LOCA after 72hr. Winter)

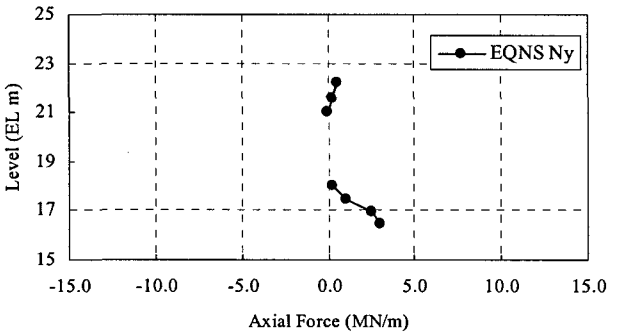

Section A-A Ny

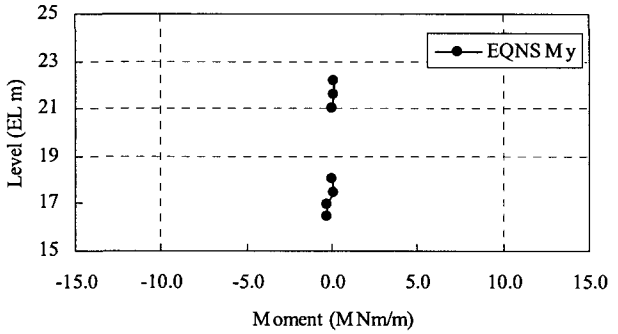

Section A-A My

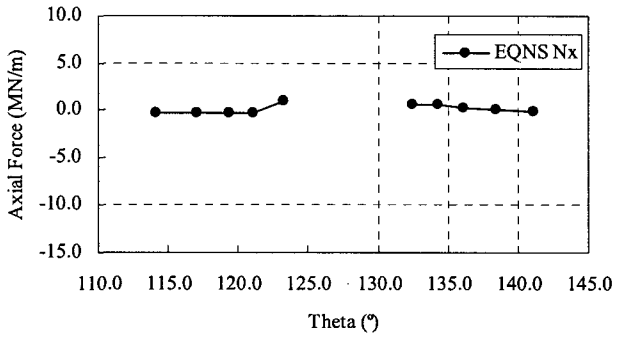

Section B-B Nx

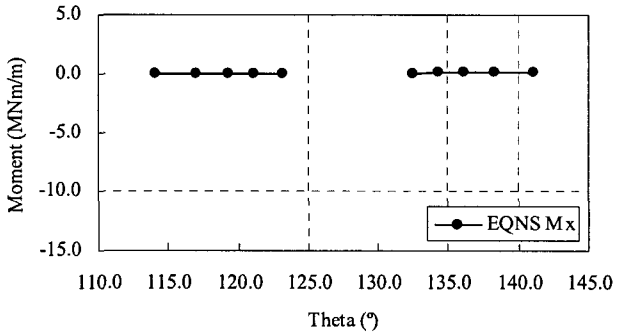

Section B-B My

Figure 3.8-17(14) Element Forces (Seismic Load: Horizontal North to South)

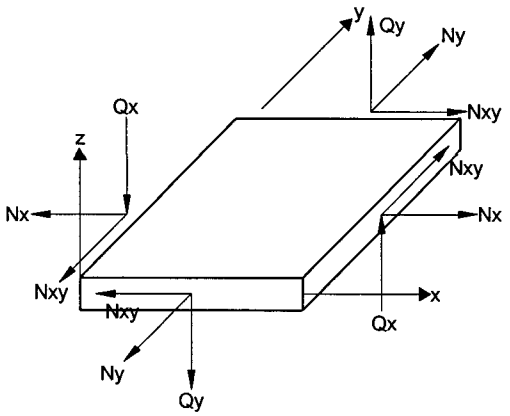

Membrane and Shear Forces

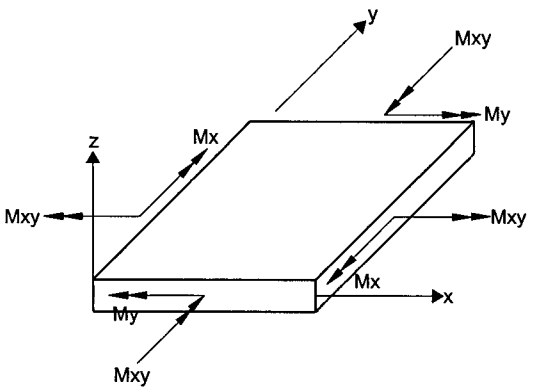

Moments

Definition of Element Coordinate System

x	y	z
horizontal	vertical	outward

Figure 3.8-17(15) Forces and Moments in Shell Element

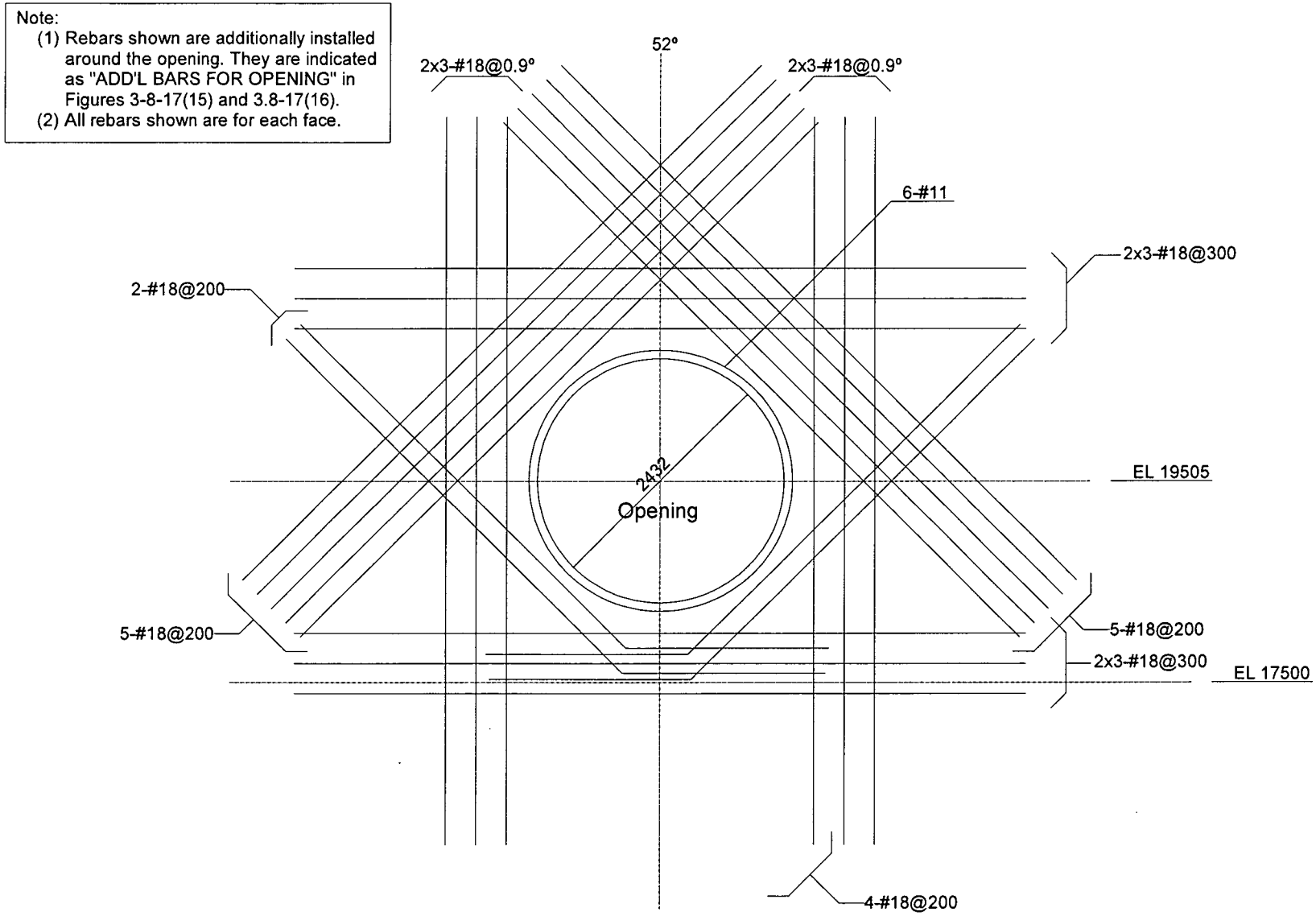

Figure 3.8-17(16) Additional Reinforcements in RCCV Wall around UD Personnel Airlock Opening

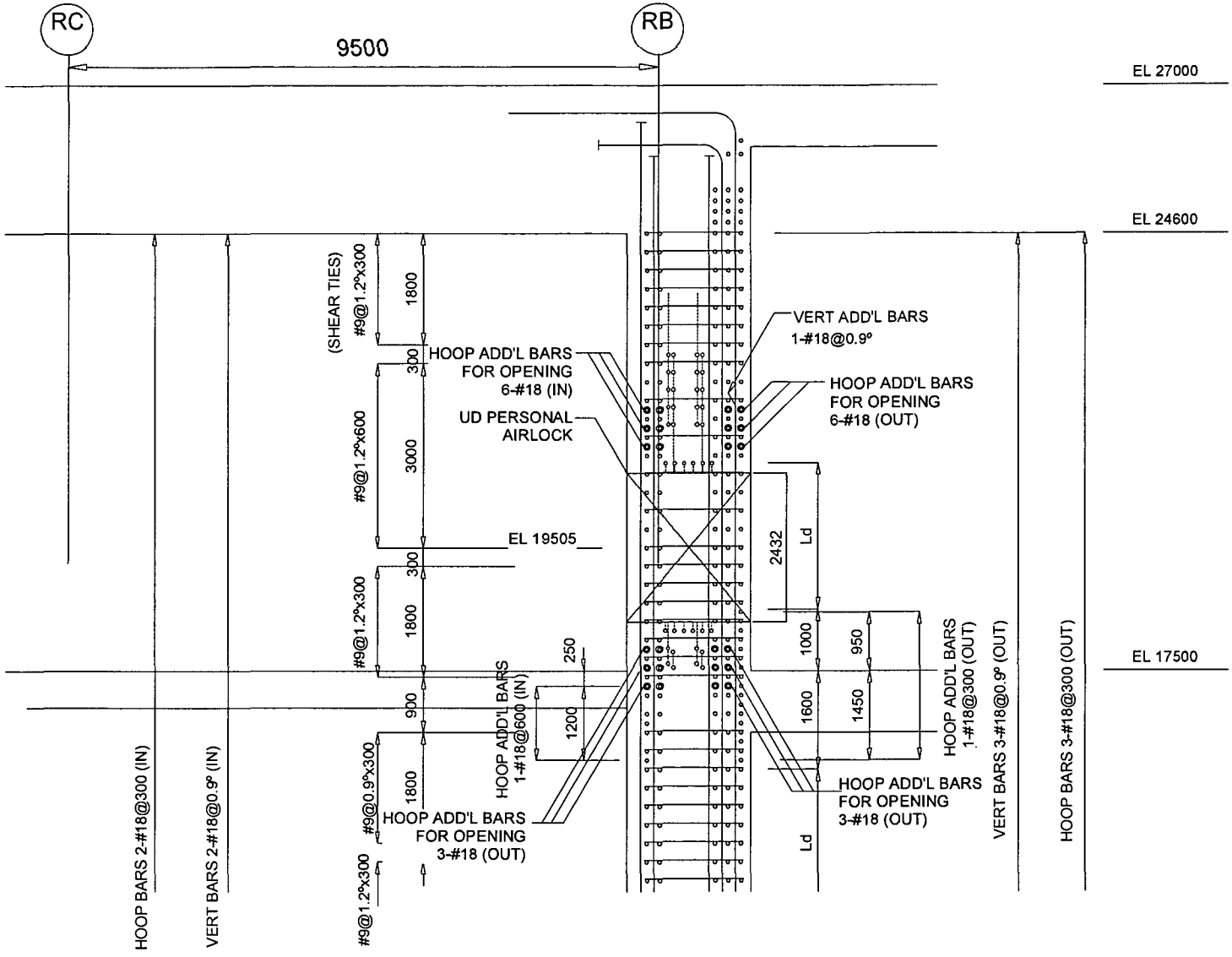

Figure 3.8-17(17) Rebar Arrangement around UD Personnel Airlock Opening (Section)

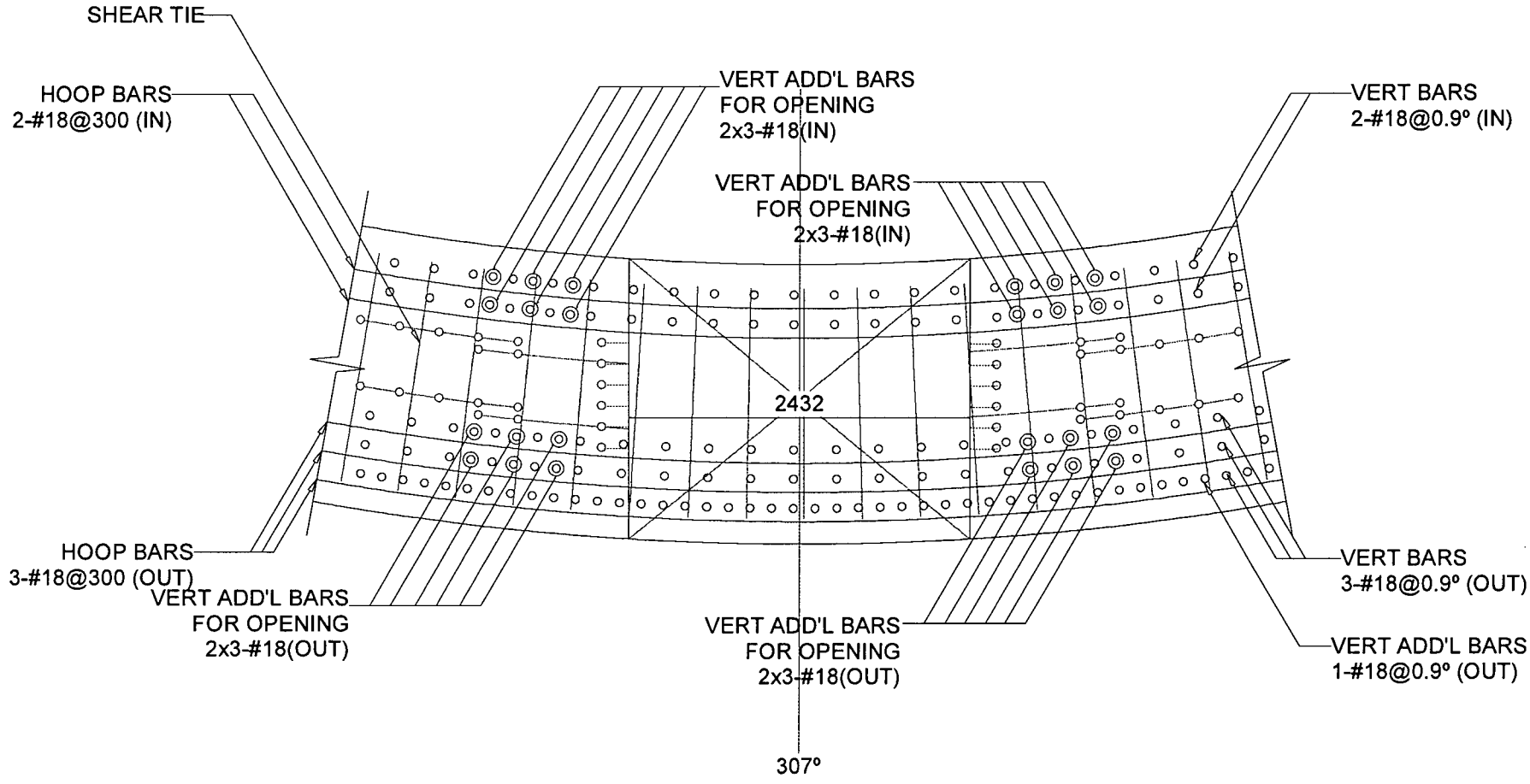

Figure 3.8-17(18) Rebar Arrangement around UD Personnel Airlock Opening (Plan)

NRC RAI 3.8-24

With regard to DCD Section 3.8.1.4.1.2:

a) *DCD Section 3.8.1.4.1.2 states that the liner plate analysis considers deviations in geometry due to fabrication and erection tolerances. Describe the treatment of fabrication/erection tolerances in the evaluation of the liner plate. Was the potential for buckling of the liner pate considered (convex curvature due to fabrication tolerances/concrete shrinkage)? Include this information in DCD Section 3.8.1 and/or Appendix 3G.*

b) *DCD Section 3.8.1.4.1.2 also states that liner strains are within allowable limits defined by ASME Code Subarticle CC-3720. Describe the analysis that verified this, and discuss how fabrication/erection tolerances are considered in this analysis. Include this information in DCD Section 3.8.1 and/or Appendix 3G.*

In addition, (1) identify the applicable detailed report/calculation (number, title, revision and date, and brief description of content) that will be available for audit by the staff, and (2) reference this report/calculation in the DCD.

GE Response

a) Liner strains are evaluated based on the analysis results of the NASTRAN model described in DCD Tier 2 Section 3G.1.4.1. In this model, the liner plate is modeled with nominal dimensions. The liner plate modeling method is discussed in the response to NRC RAI 3.8-25. Strains associated with construction-related liner deformations may be excluded when calculating liner strains for the service and factored load combinations according to ASME B&PV Code Section III, Division 2, Subarticle CC-3720.

b) The consideration of fabrication/erection tolerances for the evaluation of liner strains is described in a) above. The analysis results of the liner strains are summarized in DCD Tier 2 Table 3G.1-35. The details of the analysis results are described in DC-OG-0052, *Structural Design Report for Containment Metal Components, Revision 1*, September 2005, which contains the evaluation method and results for structural integrity of the containment liner and drywell head.

Fabrication/erection tolerances are considered for liner anchor design with the following conditions:

1) Liner thickness
   a) Carbon steel liner plate - Nominal thickness: 6.4 mm, Maximum thickness: 7.416 mm, Minimum thickness: 6.146 mm
   b) Stainless steel liner plate - Nominal thickness: 6.4 mm, Maximum thickness: 7.67 mm, Minimum thickness: 6.146 mm
2) Liner anchor spacing
   a) Nominal 508 mm, maximum 518 mm, minimum 498 mm

b) Nominal 270 mm, maximum 280 mm, minimum 260 mm

3) Anchor stiffness

Nominal value: 1603.1 (N/mm/mm)

Lower value: 800 (N/mm/mm)

Upper value: 2400 (N/mm/mm)

The worst-case evaluation results are summarized in Tables 3.8-24(1) through 3.8-24(3).

(1) The applicable detailed report/calculation that will be available for the NRC audit is DE-ES-0017, *Liner Anchorage Evaluation, Revision 0*, October 2006, which contains the evaluation method and results for RCCV liner anchor displacement/pullout.

(2) Since this information exists as part of GE's internal tracking system, it is not necessary to add it to the DCD.

Markups of DCD Tier 2 Figures 3G.1-48 and 3G.1-49 were provided in MFN 06-407.

Table 3.8-24(1) Summary of Liner Anchor Displacement Evaluation

Location	Liner Thickness (mm)	Anchor Spacing (mm)	Anchor Stiffness (N/mm/mm)	Category I*1		Category II*2	
				Displacement (mm)	Allowable (mm)	Displacement (mm)	Allowable (mm)
Wetwell Cylinder	7.67 (Max.)	518 (Max.)	800 (Lower)	0.416	1.27	-	2.54
Pedestal Cylinder	7.416 (Max.)	518 (Max.)	800 (Lower)	-		2.34	
Wetwell Bottom	7.67 (Max.)	280 (Max.)	800 (Lower)	0.398		1.82	

Note *1: Category I includes test, normal, severe environmental and extreme environmental

*2: Category II includes abnormal, abnormal/severe environmental and abnormal/extreme environmental

Table 3.8-24(2) Summary of Liner Anchor Pullout Evaluation (Concrete)

Failure Mode	Anchor Spacing (mm)	Category I		Category II	
		Load (N/mm)	Allowable (N/mm)	Load (N/mm)	Allowable (N/mm)
Cone Failure	518 (Max.)	58.1	167	68.4	167
Bearing on Flange		58.1	1964	68.4	1964

Table 3.8-24(3) Summary of Liner Anchor Pullout Evaluation (Steel)

Location	Stress Type	Anchor Spacing (mm)	Category I		Category II	
			Stress (MPa)	Allowable (MPa)	Load (MPa)	Allowable (MPa)
Flange	Bending	518 (Max.)	65	131	77	199
Web	Tension		10		11	

NRC RAI 3.8-24, Supplement 1

NRC Assessment Following the December 14, 2006 Audit

Response to Item a) related to strains associated with construction-related liner deformations is correct; however, the current DCD is not consistent with the response. The DCD states that the liner plate analysis considers deviations in geometry due to fabrication and erection tolerances, while the response indicates that strains associated with construction-related liner deformations may be excluded when calculating liner strains for the service and factored load combinations according to ASME Code Section III, Division 2, Subarticle CC-3720. GE needs to resolve this inconsistency.

Item b) is addressed by response to Item a) above and response to RAIs 3.8-25 and 26. Item b) also indicates that the analysis results of the liner strains are summarized in DCD Tier 2 Table 3G.1-35. However, this Table does not provide the liner strains associated with construction loads as required by Table CC-3720, referenced by Subarticle CC-3720. Where is this information provided?

Following response to Item b), GE indicates that fabrication/erection tolerances are considered for the liner anchor design, with the worst case results summarized in Tables 3.8-24(1) through 3.8-24(3). This will be reviewed during the December 2006 audit.

During the audit, GE indicated that the DCD will be revised to reflect the responses provided for item a and liner strains associated with construction loads will be included in the next DCD revision. NRC also will review the worst case results summarized in Tables 3.8-24(1) through 3.8-24(3).

GE Response

DCD Tier 2 Subsection 3.8.1.4.1.2 will be revised to state that the liner plate anchor design considers deviations in geometry due to fabrication and erection tolerances. In addition, it will be stated that strains associated with construction-related liner deformations are excluded when calculating liner strains for the Service and factored load combinations according to ASME Code Section III, Division 2, Subarticle CC-3720.

An additional sentence will be added to DCD Tier 2 Subsection 3G.1.5.4.1.1 stating that the liner stresses during construction are kept within the allowable values found in Table CC-3720-1 of ASME Code Section III, Division 2 by limiting concrete placement pressure to a maximum of 167 kPa for the top slab, 48 kPa for the upper drywell/lower drywell wall and 32 kPa for the wetwell wall.

DCD Impact

DCD Tier 2 Subsections 3.8.1.4.1.2 (page 3.8-8) and 3G.1.5.4.1.1 will be revised in the next update as noted in the attached markups.

NRC RAI 3.8-28

Provide additional details for the containment mechanical and electrical penetrations (other than Main Steam and Feedwater), including the number, types, geometry, analytical models used, loading, summary of results, comparison to Code allowables, and the current status of the design. Is the design final for all penetrations, or is this a COL applicant responsibility? If a COL applicant responsibility, where is this identified in the DCD? Include this information in DCD Section 3.8.2 and/or Appendix 3G.

In addition, (1) identify the applicable detailed report/calculation (number, title, revision and date, and brief description of content) that will be available for audit by the staff, and (2) reference this report/calculation in the DCD.

GE Response

Details for the containment mechanical and electrical penetrations (other than Main Steam and Feedwater) are not currently available and will be developed after the routing of piping and commodities, such as cable trays, ducts, etc., is laid out during detailed design. These containment penetrations will be designed to meet the ASME code.

A markup of DCD Tier 2 Section 3.8.2.4.1.3 was provided in MFN 06-407.

NRC RAI 3.8-28, Supplement 1

NRC Assessment Following the December 14, 2006 Audit

Is this identified as a COL action item? Are any typical details available for staff review?

GE Response

Typical details for the containment mechanical and electrical penetrations will be added to DCD Tier 2.

DCD Impact

DCD Tier 2 Subsection 3.8.2.1.3 will be revised in the next update as noted in the attached markup.

DCD Tier 2 Section 3.8 will be revised in the next update as noted in the attached markups to include Figures 3.8-6 through 3.8-11.

NRC RAI 3.8-44

DCD Section 3.8.3.2 indicates that the design of all containment internal structures conform to ANSI/ASME NQA-1-1989 and Addenda 1a-1989, 1b-1991, and 1c-1992 as indicated in DCD Table 3.8-6. A note in this table states that more recent revisions exist, however they are not used. DCD Section 17.1 indicates that the quality assurance for the ESBWR design complies with ANSI/ASME NQA-1-1983, and with NQA-1a-1983 for certain aspects of quality assurance (quality assurance program, inspection, and audits). NRC RG 1.28, Rev. 3, August 1985, accepts NQA-1 and NQA-1a-1983 Addenda subject to additions and modifications as identified in the RG. Based on the above, the quality assurance program requirements in DCD Section 3.8.3.2 are not consistent with the commitments presented in DCD Section 17.1. Please clarify which commitments apply and make the necessary revisions in the DCD, or justify the use of different QA requirements for the containment internal structures.

GE Response

The reviewer correctly identified the inconsistency between the NQA-1 references in DCD Tier 2 Sections 3 and 17. DCD Tier 2 Table 3.8-6 Item 18 has been revised to cite NQA-1-1983 and also references DCD Tier 2 Section 17.

A markup of DCD Tier 2 Table 3.8-6 was provided in MFN 06-407.

NRC RAI 3.8-44, Supplement 1

NRC Assessment Following the December 14, 2006 Audit

The revised DCD markup Table 3.8-6 references ANSI/ASME NQA-1-1983, while DCD Section 17.0 references ANSI/ASME NQA-1-1983 and NQA-1a-1983 Addenda, as endorsed by RG 1.128, Revision 3. There still remains some inconsistency which needs to be corrected.

During the audit, GE indicated that they will revise Table 3.8-6 to reference ANSI/ASME NQA-1-1983 and NQA-1a-1983 Addenda, as endorsed by RG 1.128, Revision 3.

GE Response

DCD Tier 2 Table 3.8-6 Item 18 has been revised to cite NQA-1a-1983.

DCD Impact

DCD Tier 2 Table 3.8-6 Item 18 will be revised in the next update as noted in the attached markup.

NRC RAI 3.8-59

General Design Criterion 53, in part, requires that the reactor containment be designed to permit appropriate periodic inspection of all important areas. RAI 3.8-1 requests that the applicant address this for the concrete and steel elements of the ESBWR containment structure. A stated industry design criterion for advanced reactors is to accommodate inservice inspection (ISI) of critical areas. The staff considers that monitoring and maintaining the condition of containment internal structures is essential for plant safety. DCD Section 3.8.3 does not address any special design provisions (e.g., providing sufficient physical access, providing alternative means for identification of conditions in inaccessible areas that can lead to degradation, remote visual monitoring of high radiation areas) to accommodate inservice inspection of containment internal structures. Please include a description of any special design provisions for containment internal structures in DCD Section 3.8.3.7. If none have been incorporated in the ESBWR design, please provide the technical basis for concluding that they are not necessary.

GE Response

(1) Areas of the containment are subject to periodic inspection in accordance with ASME Section XI, Subsections IWE and IWL as described in DCD Tier 2 Section 3.8.1.7.3.1. Specific provisions for access from IWE-1231 are incorporated by this reference. Further, those Subsections require inspection of the accessible areas, and areas that will be rendered inaccessible must meet the requirements of IWE-1232 for exemption of such areas as explained in DCD Tier 2 Section 3.8.1.7.3.2.

Space Control is exercised in the ESBWR by means of a 3D model. It is the means by which interference checking and space control is accomplished. It includes all safety and non-safety related SSC's. Items are added to the model as it is being developed by stages depending on criticality to the plant and construction sequence of the item. Accessibility to equipment, valves, instrumentation, welds, supports, etc. for operation, inspection or removal is characterized by sufficient space to allow unobstructed access and reach of site personnel. Therefore, aisles, platforms, ladders, handrails, etc. are reviewed as the components are laid out. Interferences with access ways, doorways, walkways, truck ways, lifting wells, etc. are constantly monitored.

(2) As indicated in item (1) above, accessibility is constantly monitored, maintained and documented during the plant layout process. ESBWR is committed to perform the required inspections per ASME Section XI and the supplemental requirements of 10CFR50.55a. Remote tooling would only be included if for some layout reasons the required inspection could not be carried out otherwise.

No DCD change was made in response to this RAI.

NRC RAI 3.8-59, Supplement 1

NRC Assessment Following the December 14, 2006 Audit

Acceptable, except that the information provided should be considered for inclusion in the DCD.

During the audit, GE provided a draft supplemental response to be included in the DCD to address this issue. As a result of a follow-up discussion, GE will revise the proposed wording to capture item (2) in the GE response to the RAI.

GE Response

GE will include the following supplemental information in DCD Tier 2 Subsection 3.8.3.7 that is provided in the original response to NRC RAI 3.8-59:

"Space Control is exercised in the ESBWR by means of a 3D model. It is the means by which interference checking and space control is accomplished. It includes all safety and non-safety related SSCs. Items are added to the model as it is being developed by stages depending on criticality to the plant and construction sequence of the item. Accessibility to equipment, valves, instrumentation, welds, supports, etc. for operation, inspection or removal is characterized by sufficient space to allow unobstructed access and reach of site personnel. Therefore, aisles, platforms, ladders, handrails, etc. are reviewed as the components are laid out. Interferences with access ways, doorways, walkways, truck ways, lifting wells, etc. are constantly monitored."

In addition, the following will be added to DCD Tier 2 Subsection 3.8.3.7:

"This method of configuration control is maintained and documented during the plant layout process. Remote tooling is considered only if for some layout reasons the required inspection could not be carried out otherwise."

The following sentence will be added to DCD Tier 2 Subsection 3.8.3.4 to reference DCD Tier 2 Subsection 3.8.3.7:

"See Subsection 3.8.3.7 for accessibility to equipment, valves, instrumentation, welds, supports, etc. for operation, inspection or removal."

See NRC RAI 3.8-58, Supplement 1 that also revises the 2nd and 3rd paragraphs of DCD Tier 2 Section 3.8.3.7.

DCD Impact

DCD Tier 2 Subsections 3.8.3.4 and 3.8.3.7 will be revised in the next update as noted in the attached markups.

NRC RAI 3.8-62

DCD Section 3.8.4 mentions several Seismic Category II structures (e.g., control building (CB) above grade and FB penthouse). Describe all Seismic Category II structures and explain each structure's physical relationship to Seismic Category I structures. Provide the structural design criteria used for all Seismic Category II structures to assure that they do not affect the performance of Seismic Category I structures, systems and components under all loading conditions. Provide sufficient information for the staff to confirm that the approach satisfies the three criteria presented in SRP 3.7.2 II,8 for all C-II SSC.

Include this information DCD Section 3.8.4.

GE Response

DCD Tier 2 Table 3.2-1 provides the Seismic Categorization of Structures and DCD Tier 2 Figures 1.2-1 through 1.2-20 provide the physical arrangement of Category I and Category II structures.

Since the methods of seismic analysis and design acceptance criteria for Seismic Category II (C-II) SSCs are the same as C-I SSCs, C-II SSCs meet the SRP3.7.2 II.8 criteria and are not postulated to fail.

See also response to NRC RAI 3.8-42.

No DCD change was made in response to this RAI.

NRC RAI 3.8-62, Supplement 1

NRC Assessment Following the December 14, 2006 Audit

See staff assessment of response to RAI 3.8-42.

GE Response

See response to NRC RAI 3.8-42, Supplement 1.

DCD Impact

No DCD change is required in response to this RAI Supplement.

NRC RAI 3.8-65

DCD Section 3.8.4.1.4, which discusses the EBAS Building, does not reference a summary report in Appendix 3G that contains a description of the EBAS Building, the loads and load combinations, reinforcement stresses, and concrete reinforcement details for the basemat, seismic walls and floors. Provide this information similar to that provided for the other Seismic Category I structures. Also provide plan and section views showing the relationship of the EBAS, CB and RB/FB foundation mats and superstructures and confirm that these structures are independent of each other.

Include this information in DCD Appendix 3G. In addition, (1) identify the applicable detailed report/calculation (number, title, revision and date, and brief description of content) that will be available for audit by the staff, and (2) reference this report/calculation in the DCD.

GE Response

See response to NRC RAI 3.8-64 Supplement 1.

Figures 3.8-65(1) and (2) show the plan and section views respectively of the RB/FB, CB and EBAS.

No DCD change was made in response to this RAI.

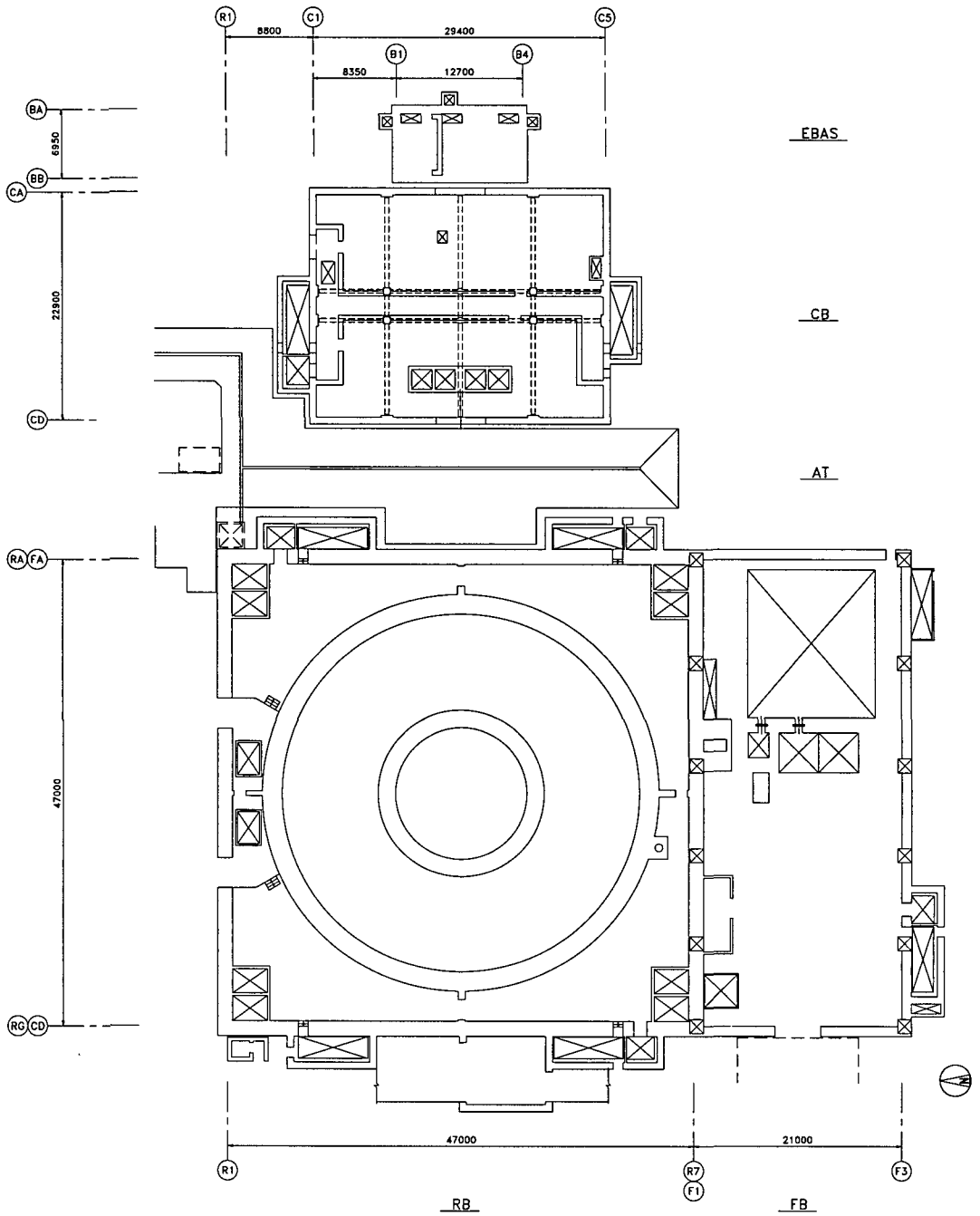

Figure 3.8-65(1) Plan View of RB/FB, CB and EBAS

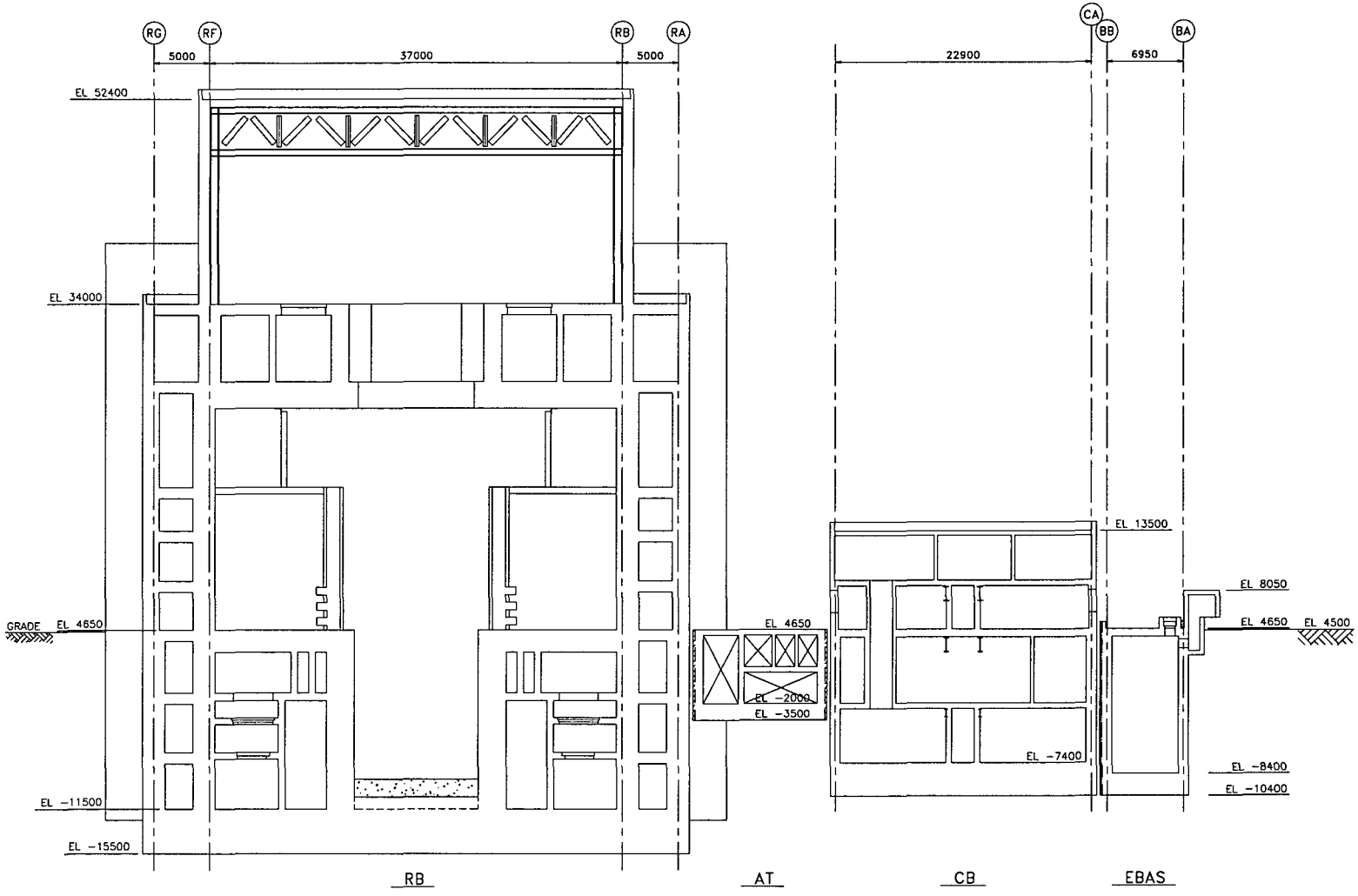

Figure 3.8-65(2) Section View of RB/FB, CB and EBAS

NRC RAI 3.8-65, Supplement 1

NRC Assessment Following the December 14, 2006 Audit

GE response references the response to RAI 3.8-64; however, that RAI does not appear to provide the requested information; i.e., a summary (in App. 3G or Section 3.8.4 of the DCD) that contains a description of the EBAS Building, the loads and load combinations, reinforcement stresses, and concrete reinforcement details for the basemat, seismic walls and floors. Provide this information similar to that provided for the other Seismic Category I structures. Regarding the plan and section views provided which show the relationship of the various structures, no dimensions were provided between each structure. Therefore, provide the physical gap dimensions between the structures and confirm that they are sufficiently apart so that there will be no seismic induced impacts between each adjacent structure, assuming worst case out-of-phase motion.

During the audit, GE indicated that they will complete the design of this structure and will summarize the results in a revision to DCD App. 3G. This revision to the DCD will confirm that sufficient gaps are provided between the EBAS building and the adjacent structures.

GE Response

The EBAS has been deleted from the ESBWR.

DCD Impact

DCD Tier 2 Subsections 3.1.2.10, 3.5.1.1.2.2.3, 3.7.2, 3.8, 3.8.4, 3.8.4.1.2, 3.8.4.1.4, 3.8.4.2.6, 3.8.4.3.5, 3.8.4.4.1, 3.8.4.5.5, 3.8.5.1, 3G.2.3, 3G.2.5.6, Table 3.2-1 and Figure 3G.2-3 will be revised in the next update as noted in the attached markups.

NRC RAI 3.8-69

DCD Section 3.8.4.2.3 discusses the applicable documents for the Fuel Building design, but does not specifically discuss the criteria for design of the spent fuel pool racks and associated structures. Provide a description of the criteria and the design of the spent fuel pool and racks. This description should include sufficient information so that the staff can determine if the criteria and design of the spent fuel pool racks and associated structures meets the staff technical position described in Appendix D to SRP Section 3.8.4.

Include this information in DCD Section 3.8.4 and/or Appendix 3G. In addition, (1) identify the applicable detailed report/calculation (number, title, revision and date, and brief description of content) that will be available for audit by the staff, and (2) reference this report/calculation in the DCD.

GE Response

The design loading and acceptance criteria for the Spent Fuel Pool, Fuel Racks and associated structures are defined in DCD Tier 2 Section 9.1 under Auxiliary Systems.

(1) At this stage of the design process detailed report/calculation for the design of spent fuel racks and associated structures are not available. However, Specification 26A6552, *ESBWR Fuel Storage Functional Requirements, Revision 1*, August 2006, is available for audit by the NRC staff. This specification contains the functional requirements for design, performance, configuration, testing, and documentation for Fuel Storage Racks. The criteria and design of the spent fuel racks and associated structures meet the staff technical position described in Appendix D to SRP Section 3.8.4.

(2) Since this information exists as part of GE's internal tracking system, it is not necessary to add it to the DCD.

Markups of DCD Tier 2 Sections 3.8.4.2.3 and 9.1.2 were provided in MFN 06-407.

NRC RAI 3.8-69, Supplement 1

NRC Assessment Following the December 14, 2006 Audit

For design loading and acceptance criteria, the GE response given above references DCD Section 9.1. DCD Section 9.1, Rev. 2 has been revised to correctly reference SRP 3.8.4, Appendix D; however, the loading combinations specified in DCD Section 9.1 are not in agreement with those in SRP 3.8.4, Appendix D. This needs to be reconciled. If time permits during the audit, the GE specification referenced above should be reviewed.

During the audit, GE agreed to revise DCD Section 9.1.2.4 to be consistent with the criteria given in SRP 3.8.4, Appendix D.

GE Response

Loads and load combinations in DCD Tier 2 Subsection 9.1.2.4 have been reconciled with SRP 3.8.4, Appendix D.

DCD Impact

DCD Tier 2 Subsection 9.1.2.4 (page 9.1-5) will be revised in the next update as noted in the attached markup.

NRC RAI 3.8-76

Provide information on Materials, Quality Control, and Special Construction Techniques for Other Seismic Category I Structures. This information is normally included in Section 3.8.4.6, but has not been provided in the ESBWR DCD. SRP 3.8.4 provides guidance as to the type of information that the staff expects to review.

Include this information in a new DCD Section 3.8.4.6.

GE Response

GE agrees to include the information on Materials, Quality Control, and Special Construction Techniques for Other Seismic Category I Structures in the DCD.

A markup of DCD Tier 2 Section 3.8.4.6 was provided in MFN 06-407.

NRC RAI 3.8-76, Supplement 1

NRC Assessment Following the December 14, 2006 Audit

SRP 3.8.4.I.6 requires, by reference to SRP 3.8.3.I.6, that welding of reinforcing bars (splices) comply with the applicable sections of the ASME Section III, Division 2, Code. The proposed markup in DCD Section 3.8.4.6 currently proposes to meet ACI 349-01 and applicable Regulatory Guides for splices. This needs to be addressed.

During the audit, GE agreed to revise the DCD to reflect the requirement of SRP 3.8.4.I.6 and 3.8.3.I.6.

GE Response

Welded bar splices are not intended to be used in the ESBWR design. If they are used, inspection and documentation requirements conform to ASME Code Section III, Division II consistent with SRP 3.8.3.I.6.c, which will be reflected in DCD Tier 2 Section 3.8.4.6.4.

DCD Impact

DCD Tier 2 Subsection 3.8.4.6.4 will be revised in the next update as noted in the attached markup.

NRC RAI 3.8-77

DCD Section 3.9.2 presents the criteria, testing procedures, and dynamic analyses used to ensure the structural and functional integrity of piping systems, mechanical equipment, reactor internals, and their supports (including supports for conduits, cable trays, and ventilation ducts) under vibratory loadings. DCD Section 3.10.3.2 describes the design approach for cable tray and conduit supports. Although some limited information is provided in DCD Sections 3.9.2 and 3.10.3 about the design of supports for conduits, cable trays, and ventilation ducts, no information could be located that covers design criteria for conduits, cable trays, and ventilation ducts. Other Seismic Category I Structures have attached conduits, cable trays, and ventilation ducts. However, DCD Section 3.8.4 does not describe the design criteria used for cable trays, conduits, ventilation ducts. Therefore, please provide a description of the analysis and design criteria (i.e., description; applicable codes, standards, and specifications; loads and load combinations; acceptance criteria; and analysis and design procedures) used for cable trays, conduits, and ventilation ducts in Other Category I Structures.

Include this information in the DCD. In addition, (1) identify the applicable detailed report/calculation (number, title, revision and date, and brief description of content) that will be available for audit by the staff, and (2) reference this report/calculation in the DCD.

GE Response

See response to NRC RAI 3.8-52.

No DCD change was made in response to this RAI.

NRC RAI 3.8-77, Supplement 1

NRC Assessment Following the December 14, 2006 Audit

See staff assessment of response to RAI 3.8-52.

During the audit, GE agreed to revise Tables 3.8-6 and 3.8-9 of the DCD to include the additional codes and standards provided in the draft supplemental response.

GE Response

See response to NRC RAI 3.8-52, Supplement 1.

DCD Impact

No DCD change was required in response to this RAI Supplement.

NRC RAI 3.8-79

Confirm that the Turbine Building (TB), Service Building (SB), and Radwaste (RW) Building, which are in close proximity to Category I structures, are designed to Seismic Category II requirements. If not, explain why not.

Include this information in DCD Section 3.8.4.

GE Response

The TB, SB and RW seismic category classifications are shown in DCD Tier 2 Table 3.2-1. The TB is classified as Seismic Category II, and the SB is classified as Non-seismic. Since SB is in close proximity to RB/FB, its classification will be changed to Seismic Category II in DCD Tier 2 Table 3.2-1. The RW is remotely located from C-I structures and is classified as Non-Seismic Category. It is, however, designed to the special prescriptive provisions of RG 1.143, Category RW-IIa.

A markup of DCD Tier 2 Table 3.2-1 was provided in MFN 06-407.

NRC RAI 3.8-79, Supplement 1

NRC Assessment Following the December 14, 2006 Audit

For the RW building, the term "remote" needs to be clarified. Does this building meet the criteria in SRP 3.7.2.8.a, which states that the collapse of any non-Category I structure will not cause the non-Category I structure to strike a seismic Category I structure or component? If so, provide a description of what was done to demonstrate this, since the RB/FB and RW buildings appear to be relatively close (see DCD Figure 1.1-1).

During the audit, GE indicated that they will document that the distance between the RW building and any SC I structure, system, and component is greater than the height of the RW above grade.

GE Response

An exception to the requirement that any NS structure be located at least a distance of its height above grade from C-I or C-II structures was taken for the RW building in DCD Tier 2 Rev. 2 Subsection 3.5.3.3 as shown in the DCD Tier 2 excerpt below:

3.5.3.3 Impact of Failure of Nonsafety-Related Structures, Systems and Components

Non-safety related structures could be either Seismic Category II (C-II) or NS. C-II structures are designed not to collapse under tornado wind loads. Any NS structure (except the Radwaste Building) is located at least a distance of its height above grade from C-I or C-II structures. Per Section 3.5.2, Offgas Charcoal Bed Adsorbers are provided with missile protection.

The RW building has a height of 12 m above grade and is at least 10 m away from the RB (measured corner to corner). The RW building is designed to RG 1.143 (Category RW-IIa), which exceeds NS requirements for seismic design. Therefore, potential failure of the RW building under full SSE will have negligible impact on C-I or C-II structures.

DCD Impact

No DCD change was required in response to this RAI Supplement.

NRC RAI 3.8-80

What buildings other than the RB, FB and CB have been designed and evaluated to applicable acceptance criteria? What is the status of the EBAS and RW Building designs? What are the COL applicant responsibilities and what are the standard plant design restrictions/limitations/requirements for the design of buildings not covered in the DCD?

Include this information in the DCD.

GE Response

The analytical design of the RB, CB and FB is done and documented in DCD Tier 2 Appendices 3A and 3G. The preliminary design of the EBAS is done. The RW design has not started.

The COL applicant responsibilities are addressed in DCD Tier 2 Section 3.8.6.

No DCD change was made in response to this RAI.

NRC RAI 3.8-80, Supplement 1

NRC Assessment Following the December 14, 2006 Audit

Will the design of the EBAS and RW be completed soon enough to allow the NRC staff to review it before issuing the SER? Otherwise, this will likely be an Open Item in the SER. Also, DCD Section 3.8.6 is not labeled "COL applicant responsibilities", but rather "COL Information." For COL applicant responsibilities, are there additional items specified somewhere else in the DCD that must be satisfied? Currently there is only one item in DCD Section 3.8.6; it refers to the structural integrity test (SIT) of the ESBWR containment.

During the audit, GE indicated that the status of the EBAS design is addressed in RAI 3.8-65. GE stated that since the RW building is a non safety-related and non SCI or SC II structure, it does not need to be designed as part of the design certification, nor will it be a COL Action Item. GE also provided a draft supplemental response to address the questions related to Section 3.8.6 - COL Information. During the meeting GE indicated that structural related COL Action Items will be included in Section 3.8.6.

GE Response

See response to NRC RAI 3.8-65, Supplement 1 for EBAS status. The RW building is a non C-I structure.

The SIT information contained in DCD Tier 2 Subsection 3.8.6 has been moved to DCD Tier 1 Table 2.15.1-1, Item 5 per NRC RAI 14.3-101 as an ITAAC item. There will be no COL Action Items in DCD Tier 2 Section 3.8, Revision 3.

DCD Impact

DCD Tier 2 Subsections 3.8.1.7.3.12 and 3.8.6 will be revised in the next update as noted in the attached markups.

NRC RAI 3.8-84

DCD Section 3.8.4.2 indicates that the design of Other Category I Structures conform to ANSI/ASME NQA-1-1989 and Addenda 1a-1989, 1b-1991, and 1c-1992, as indicated in DCD Table 3.8-9. A note in this table states that more recent revisions exist, however they are not used. DCD Section 17.1 indicates that the quality assurance for the ESBWR design complies with ANSI/ASME NQA-1-1983, and with NQA-1a-1983 for certain aspects of quality assurance (quality assurance program, inspection, and audits). NRC RG 1.28, Rev. 3, August 1985, accepts NQA-1 and NQA-1a-1983 Addenda subject to additions and modifications as identified in the RG. Based on the above, the quality assurance program requirements in DCD Section 3.8.4.2 are not consistent with the commitments presented in DCD Section 17.1. Please clarify which commitments apply and make the necessary revisions in the DCD, or justify the use of different QA requirements for the Other Seismic Category I Structures.

GE Response

The reviewer correctly identified the inconsistency between the NQA-1 references in DCD Tier 2 Sections 3 and 17. DCD Tier 2 Table 3.8-9 Item 5 has been revised to cite NQA-1-1983 and also references DCD Tier 2 Section 17.

A markup of DCD Tier 2 Table 3.8-9 was provided in MFN 06-407.

NRC RAI 3.8-84, Supplement 1

NRC Assessment Following the December 14, 2006 Audit

See staff assessment of this response in RAI 3.8-44.

During the audit, GE indicated that they will revise Table 3.8-9 to reference ANSI/ASME NQA-1-1983 and NQA-1a-1983 Addenda, as endorsed by RG 1.128, Revision 3.

GE Response

DCD Tier 2 Table 3.8-9 Item 5 has been revised to cite NQA-1a-1983.

DCD Impact

DCD Tier 2 Table 3.8-9 Item 5 will be revised in the next update as noted in the attached markup.

NRC RAI 3.8-95

DCD Section 3.8.5.4 indicates that site-specific allowable bearing capacities are no less than the calculated static and dynamic bearing pressures, and refers to Section 3.7.5.1 for COL information. Section 3.7.5.1 states that the site allowable foundation bearing capacities are no less than the values in Section 3G.1.5.5 for RB, Section 3G.2.5.5 for CB and Section 3G.3.5.5 for FB. Section 3G.1.5.5 refers to Table 3G. 1-58; Section 3G.2.5.5 refers to Table 3G.2-24; and Section 3G.3.5.5 refers back to Section 3G.1.5.5. The circuitous referencing employed is confusing and unnecessary. Expand the discussion of bearing capacities as a function of site conditions (soft, medium, hard) in DCD Section 3.8.5.4, and directly reference the Appendix 3G tables that contain the pertinent information.

GE Response

To eliminate circuitous referencing, the statement, "The site-specific allowable bearing capacities are no less than the calculated static and dynamic bearing pressures. See Subsection 3.7.5.1 for COL information", will be deleted from DCD Tier 2 Section 3.8.5.4. DCD Tier 2 Section 3.7.5.1 is a more appropriate location to capture seismic design parameters.

A markup of DCD Tier 2 Section 3.8.5.4 was provided in MFN 06-407.

NRC RAI 3.8-95, Supplement 1

NRC Assessment Following the December 14, 2006 Audit

The response does not address correcting the circuitous referencing in DCD 3.7.5.1 and App. 3G. Has the bearing capacity information been accepted in the staff review of DCD 3.7?

During the audit, GE provided a draft supplemental response which states that they will collect COL actions for site related parameters in DCD Chapter 2. GE will revise DCD Section 3.8.5 to reference the appropriate section in Chapter 2 for site related parameters, including site specific soil bearing capacity requirements.

GE Response

DCD Tier 2 Subsection 3.8.5.4 will be revised to state that the minimum requirements for the physical properties of the site-specific subgrade materials are furnished in DCD Tier 2 Table 2.0-1. It will also be revised to state that COL actions for site related parameters are addressed in DCD Tier 2 Table 2.0-2, Subsection 2.5.4.

DCD Impact

DCD Tier 2 Table 2.0-1 and Subsections 3.7.1, 3.7.1.1, 3.7.1.1.3, 3.7.5 and 3.8.5.4 will be revised in the next update as noted in the attached markups.

NRC RAI 3.8-97

DCD Section 3.8.5.5 presents two specifications of appropriate safety factors (SF) for foundation design. The SF against uplift indicates that the full calculated dead load will be used to counteract the potential effects of buoyancy. However, due to the uncertainty in calculation of plant dead loads, it is typical to limit the effective dead load to a fraction of the best estimate dead load, being typically limited to 0.90 of the full dead load. DCD Section 3.8.5.5 needs to clarify how the dead load will be defined for this uplift evaluation, including the treatment of the stored volume of water in the pools.

Include this information in DCD Section 3.8.5.5. In addition, (1) identify the applicable detailed report/calculation (number, title, revision and date, and brief description of content) that will be available for audit by the staff, and (2) reference this report/calculation in the DCD.

GE Response

The full dead load was considered in the buoyancy calculations. Since the FS are sufficiently large, it is not deemed necessary to use 0.90 of the DL for checking. Table 3.8-97(1) compares the Factors of Safety for the flotation for the full dead load and 0.9 of the full dead load cases. Factors of safety are larger than the required value with sufficient margins even if the dead loads are reduced to 90% of the full value.

(1) The applicable detailed reports/calculations that will be available for the NRC audit are:

26A6652, *RB FB Stability Analysis Report, Revision 2*, April 2006, which contains the stability calculations of the Reactor Building/Fuel Building.

26A6654, *CB Stability Analysis Report, Revision 2*, April 2006, which contains the stability calculations of the Control Building.

(2) Since this information exists as part of GE's internal tracking system, it is not necessary to add it to the DCD.

No DCD change was made in response to this RAI.

Table 3.8-97(1) Factors of Safety for Floatation

Building	Load Combination	Factors of Safety	
		Required	Actual
RB/FB	1.0D + 1.0F'	1.1	3.48
	0.9D + 1.0F'		3.13
CB	1.0D + 1.0F'	1.1	1.66
	0.9D + 1.0F'		1.49

NRC RAI 3.8-97, Supplement 1

NRC Assessment Following the December 14, 2006 Audit

GE needs to clarify how the dead load was defined for the buoyancy calculations and what effect the stored volume of the water in the pools has on the factor of safety for floatation.

During the audit, GE provided a draft supplemental response which addresses this RAI.

GE Response

As described in the original response to NRC RAI 3.8-97, the full dead load was used. The volume of water in the pools represents a small fraction of the total building weight, and the factor of safety against floatation using 90% of the design dead load is very large.

DCD Impact

No DCD change is required in response to this RAI Supplement.

NRC RAI 3.8-101

DCD Section 3.8.5.2 implies that two separate sets of codes, standards, and specifications were used for the common RCCV/RB/FB foundation. Was the common foundation supporting the RCCV, RB, and FB actually designed to two different sets of codes, standards and specifications, as indicated, or was a uniform design basis employed? If two different design bases were employed, explain how this was implemented and justify the jurisdictional boundary.

Include this information in DCD Section 3.8.5.2. In addition, (1) identify the applicable detailed report/calculation (number, title, revision and date, and brief description of content) that will be available for audit by the staff, and (2) reference this report/calculation in the DCD.

GE Response

Section designs of the portions, which are included in the RCCV, are performed in accordance with the ASME code, and other portions outside of containment are designed in accordance with ACI 349.

The loads and load combinations that cover both codes are considered for the whole basemat for conservatism.

See also response to NRC RAI 3.8-4.

No DCD change was made in response to this RAI.

NRC RAI 3.8-101, Supplement 1

NRC Assessment Following the December 14, 2006 Audit

GE's response to RAI 3.8-101 does not adequately address RAIs 3.8-101, -102, and -103. There is no discussion of how jurisdictional boundaries have been evaluated. How are loads and load combinations that cover both codes considered for the whole basemat? Were the code-specific acceptance criteria applied to the whole basemat, for the code-specific load combinations? Was there redundancy of evaluation, to effectively qualify the whole basemat in accordance with both codes?

During the audit, it was agreed that this issue is being addressed under RAI 3.8-4.

GE Response

See response to NRC RAI 3.8-4, Supplement 1 for further clarification of jurisdictional boundaries.

DCD Impact

No DCD change is required in response to this RAI Supplement.

NRC RAI 3.8-102

DCD Section 3.8.5.3 implies that two different sets of loads and load combinations were used for design of the common RCCV/RB/FB foundation. For the common foundation supporting the RCCV, RB and FB, explain how two different sets of loads and load combinations were implemented and justify the jurisdictional boundary.

Include this information in DCD Section 3.8.5.3. In addition, (1) identify the applicable detailed report/calculation (number, title, revision and date, and brief description of content) that will be available for audit by the staff, and (2) reference this report/calculation in the DCD.

GE Response

Refer to the response to NRC RAI 3.8-101.

No DCD change was made in response to this RAI.

NRC RAI 3.8-102, Supplement 1

NRC Assessment Following the December 14, 2006 Audit

GE refers to response to RAI 3.8-101. See staff assessment of response to RAI 3.8-101. During the audit, it was agreed that this issue is being addressed under RAI 3.8-4.

GE Response

See response to NRC RAI 3.8-4.

DCD Impact

No DCD change is required in response to this RAI Supplement.

NRC RAI 3.8-103

DCD Section 3.8.5.5 describes the structural acceptance criteria for foundations and states that the containment portion follows DCD Section 3.8.1.5, and the rest of the foundations follow DCD Section 3.8.4.5. Was the common foundation supporting the RCCV, RB, and FB actually designed to two different sets of structural acceptance criteria, as indicated, or was uniform structural acceptance criteria employed? If two different structural acceptance criteria were employed, explain how this was implemented and justify the jurisdictional boundary.

Include this information in DCD Section 3.8.5.5. In addition, (1) identify the applicable detailed report/calculation (number, title, revision and date, and brief description of content) that will be available for audit by the staff, and (2) reference this report/calculation in the DCD.

GE Response

Refer to the response to NRC RAI 3.8-101.

No DCD change was made in response to this RAI.

NRC RAI 3.8-103, Supplement 1

NRC Assessment Following the December 14, 2006 Audit

GE refers to response to RAI 3.8-101. See staff assessment of response to RAI 3.8-101. During the audit, it was agreed that this issue is being addressed under RAI 3.8-4.

GE Response

See response to NRC RAI 3.8-4.

DCD Impact

No DCD change is required in response to this RAI Supplement.

Table 2.0-1

Envelope of ESBWR Standard Plant Site Design Parameters [1]

Maximum Ground Water Level:	0.61 m (2 ft) below plant grade
Extreme Wind:	**Seismic Category I and II Structures** - 100-year Wind Speed (3-sec gust): 67.1 m/s (150 mph) - Exposure Category: D **Non-Seismic Standard Plant Structures** - Extreme wind 49.2 m/s (110 mph)
Maximum Flood (or Tsunami) Level: [2]	0.3 m (1 ft) below plant grade
Tornado:	- Maximum Tornado Wind Speed: [3] 147.5 m/s (330 mph) - Maximum Rotational Speed: 116.2 m/s (260 mph) - Translational Velocity: 31.3 m/s (70 mph) - Radius: 45.7 m (150 ft) - Maximum Pressure Differential: 16.6 kPa (2.4 psi) - Rate of Pressure Change: 11.7 kPa/s (1.7 psi/s) - Missile Spectra: Spectra I of SRP 3.5.1.4, Rev 2 applied to full building height.
Precipitation (for Roof Design):	- Maximum Rainfall Rate: [4] 49.3 cm/hr (19.4 in/hr) - Maximum Short Term Rate: 15.7 cm (6.2 in) in 5 minutes - Maximum Roof Load: [5] 2873 Pa (60 lbf/ft^2)
Ambient Design Temperature: [6]	**2% Exceedance Values** - Maximum: 35.6°C (96°F) dry bulb 26.1°C (79°F) wet bulb (coincident) 27.2°C (81°F) wet bulb (non-coincident) - Minimum: -23.3°C (-10°F) **1% Exceedance Values** - Maximum: 37.8°C (100°F) dry bulb 26.1°C (79°F) wet bulb (coincident) 27.8°C (82°F) wet bulb (non-coincident) - Minimum: -23.3°C (-10°F) **0% Exceedance Values (Historic limit)** - Maximum: 46.1°C (115°F) dry bulb 26.7°C (80°F) wet bulb (coincident) 29.4°C (85°F) wet bulb (non-coincident) - Minimum: -40°C (-40°F)
Soil Properties:	- Minimum Static Bearing Capacity: [7] ≥ 718 kPa (15000 lbf/ft^2) - Minimum Shear Wave Velocity: [8] 300 m/s (1000 ft/s) - Liquefaction Potential: None under footprint of Seismic Category I or II structures.

Notes for Table 2.0-1:

(1) The design of the Radwaste Building uses a set of design parameters that are specified in Regulatory Guide 1.143, Table 2, Class RW IIa instead of the corresponding values given in this table.

(2) Probable maximum flood level (PMF), as defined in Table 1.2-6 of Volume III of the Utility Requirements Document (URD).

(3) Maximum speed selected is based on NRC Interim Position on Regulatory Guide 1.76.

(4) Based on probable maximum precipitation (PMP) for one hour over 2.6 km^2 (one square mile) with a ratio of 5 minutes to one hour PMP of 0.32 as found in National Weather Source Publication Hydrometeorology Report No. 52 (HMR-52). Roof scuppers are designed to handle the PMP. When used in combination with snow pack, the roof and drainage design is for 2873 Pa (60 lbf/ft^2) extreme load.

(5) Maximum design roof load accommodates snow load and probable maximum winter precipitation in ASCE 7-02 and HMR-52.

(6) Zero percent exceedance values are based on historical high and low values. One and two percent exceedance values were selected in order to bound the values presented in the URD and available Early Site Permit applications.

(7) At foundation level of Seismic Category I structures. See Subsections 3G.1.5.5, 3G.2.5.5 and 3G.3.5.5 for minimum dynamic bearing capacity for the RB, CB and FB respectively.

(8) This is the equivalent minimum shear wave velocity at low strains after the soil property uncertainties have been applied. V_{eq} is calculated to achieve the same wave traveling time over the depth equal to the embedment depth plus 2 times the largest foundation plan dimension below the foundation as follows:

$$V_{eq} = \frac{\sum d_i}{\sum \frac{d_i}{V_i}}$$

where d_i and V_i are the depth and shear wave velocity, respectively, of the ith layer.

(9) Safe Shutdown Earthquake (SSE) design ground response spectra are defined as free-field outcrop spectra at the foundation level (bottom of the base slab) of Seismic Category I structures.

(10) Values reported here are actually design criteria rather than site design parameters. They are included here because they don't appear elsewhere in the DCD.

Capability is provided for testing each battery, battery charger, and inverter without disrupting power to the Class 1E loads.

Design of the Class 1E power system provides testability in accordance with the requirements of Criterion 18. For further discussion, see the following sections:

Chapter/ Section	Title
8.3	On-site Power Systems
14	Initial Test Program

3.1.2.10 Criterion 19 — Control Room

Criterion 19 Statement

A control room shall be provided from which actions can be taken to operate the nuclear power unit safely under normal conditions and to maintain it in a safe condition under accident conditions, including loss-of-coolant accidents. Adequate radiation protection shall be provided to permit access and occupancy of the control room under accident conditions without personnel receiving radiation exposures in excess of 5 rem whole body, or its equivalent to any part of the body, for the duration of the accident.

Equipment at appropriate locations outside the control room shall be provided (1) with a design capability for prompt hot shutdown of the reactor, including necessary instrument action and controls to maintain the unit in a safe condition during hot shutdown, and (2) with a potential capability for subsequent cold shutdown of the reactor through the use of procedures.

Evaluation Against Criterion 19

The control room contains the controls and necessary surveillance equipment for operation of the plant systems, including the reactor and its auxiliary systems, engineered safety features, turbine generator, steam and power conversion systems, and station electrical distribution.

The control room is located in the control building. Safe occupancy of the control room during abnormal conditions is provided in the design. Adequate shielding is provided to maintain radiation levels in the control room within prescribed limits in the event of a design basis accident for the duration of the accident.

The control room ventilation system has redundant equipment and includes radiation, toxic gas and smoke detectors with appropriate alarms and interlocks. The control room intake air can be filtered through high efficiency particulate air/absolute (HEPA) and charcoal filters. If any of the above hazards exist at the normal control room ventilation intake, habitability is assured by the Control Room Habitability Area HVAC Subsystem (CRHAVS), which upon isolation of the control room provides a positive air purge through an Emergency Filter Unit (EFU).

The control room is continuously occupied by qualified operating personnel under both operating and accident conditions. In the unlikely event that the control room must be vacated and access is restricted, instrumentation and controls are provided by two divisional Remote Shutdown System (RSS) panels located outside the control room in the Reactor Building. Either or both of

Table 3.2-1

Classification Summary

Principal Components[1]	Safety Class.[2]	Location[3]	Quality Group[4]	QA Req.[5]	Seismic Category[6]	Notes
3. Drain piping and valves, including supports, in other buildings	N	ALL except RB, FB	D	E	NS	
4. Other mechanical and electrical modules	N	ALL	—	E	NS	
U65 Other Building Structures	N	OO, OL	—	E	NS	
U66 Access Tunnel Structures	N	OL	—	E	II	
U67 Radwaste Tunnel	N	OL	—	E	NS	Structural acceptance and material criteria for the Radwaste tunnel are in accordance with RG 1.143, Safety Classification RW-IIa.
U71 Reactor Building Structure						
1. Main building	3	RB	—	B	I	
2. Stair towers and elevator shafts	N	RB	—	E	II	
U72 Turbine Building Structure	N	TB	—	E	II	
U73 Control Building Structure						
1. Main building	3	CB	—	B	I	
2. Stair towers and elevator shaft	N	CB	—	E	II	
U74 Radwaste Building Structure	N	RW	—	E	NS	Radwaste Management Systems – A quality assurance program meeting the guidance of NRC Regulatory Guide 1.143, Category RW-IIa is applied to radioactive waste management systems during design and construction.
U75 Service Building Structure	N	SB	—	E	II	
U77 Control Building HVAC						
1. Ducts, valves, and dampers (including supports) supporting safety-related areas	3	CB	—	B	I	

The only remaining pressurized components considered to be potentially capable of producing missiles are as follows:

- valve bonnets (large and small);
- valve stems;
- pressure vessels;
- thermowells;
- retaining bolts; and
- blowout panels.

3.5.1.1.2.2.1 Valve Bonnets

Valves of ANSI 900 psig (6.21 MPaG) and above are constructed in accordance with the ASME Code, Section III and are pressure-seal bonnet-type valves. Valve bonnets are prevented from becoming missiles by limiting stresses in the bolting to those defined by the ASME Code and by designing flanges in accordance with applicable code requirements. Safety factors involved against failure of these type bonnets are sufficiently high that these pressure seal-type valves are not considered a potential missile source (Reference 3.5-3).

Most valves of ANSI 600 psig (4.14 MPaG) rating and below are valves with bolted bonnets. These type valves were analyzed for the safety factors against failure, and, coupled with the low historical incidents of complete severance failure, were determined to not be a potential missile source (Reference 3.5-3).

3.5.1.1.2.2.2 Valve Stems

All the isolation valves installed in the reactor coolant systems have stems with back seats, which eliminates the possibility of ejecting valve stems even if the stem threads fail. A double failure of highly reliable components would be required to produce a valve stem missile, so the overall probability of occurrence is less than 10^{-7} per year. Hence, valve stems can be dismissed as a source of missiles.

3.5.1.1.2.2.3 Pressure Vessels

Moderate energy vessels less than 1.9 MPaG (275 psig) are not credible missile sources. The pneumatic system air bottles and components are designed for 17.2 MPaG (2500 psig) and the SLC accumulator tank is designed for 17.1 Mpa (2500 psia) to the ASME Code, Section III requirements. These bottles are not considered a credible source of missiles for the following qualitative analysis:

- The bottles are fabricated from heavy-wall rolled steel.
- The operating orientation is vertical with the ends facing concrete slabs. The bottles are topped with steel covers thick enough to preclude penetration by a missile.
- The fill connection and critical parts are protected by a permanent steel collar.
- The bottles are strapped in a rack to prevent them from toppling over. The rack is seismically designed to the ASME Code, Section III, Subsection NF requirements.

design analysis is required to show that OBE design requirements are met. This is consistent with Appendix S to 10 CFR 50. The effects of low-level earthquakes (lesser magnitude than the SSE) on fatigue evaluation and plant shutdown criteria are addressed in Subsections 3.7.3.2 and 3.7.4.4, respectively.

3.7.1 Seismic Design Parameters

As discussed in Standard Review Plan (SRP) 3.7.1, structures that are important to safety and that must withstand the effects of earthquakes are designed to the relevant requirements of GDC 2. The structures are also designed to comply with Appendix S to 10 CFR 50 concerning natural phenomena. Standardized plants envelop the most severe earthquakes that affected a great number of sites where a nuclear plant may be located, with sufficient margin considering limited accuracy, quantity and period of time in which historical data have been accumulated. Seismic design parameters considered for ESBWR comprise two site conditions, generic sites and early site permit (ESP) sites. Three sites, North Anna (Reference 3.7-2), Clinton (Reference 3.7-3) and Grand Gulf (Reference 3.7-4) are currently in the process of ESP application to the NRC. A review of the three site conditions reveals that Clinton and Grand Gulf are bounded by the envelope of generic site and North Anna conditions. North Anna ESP site is therefore selected for further consideration in conjunction with generic sites for site enveloping seismic design of the ESBWR Standard Plant.

3.7.1.1 Design Ground Motion

The ESBWR standard plant SSE design ground motion is rich in both low and high frequencies. The low-frequency ground motion follows RG 1.60 ground spectra anchored to 0.3g. The high-frequency ground motion matches the North Anna ESP site-specific spectra as representative of most severe rock sites in the Eastern US. These two ground motions are considered separately in the basic design. To verify the basic design the two separate inputs are further enveloped to form a single ground motion as the design basis ground motion for ESBWR. The single envelope design ground response spectra are shown in Figures 2.0-1 and 2.0-2 for horizontal and vertical direction, respectively. They are defined as free-field outcrop spectra at the foundation level (bottom of the base slab). Application of design ground motion at the foundation level is a conservative approach for deeply embedded foundations as compared to the compatible free-field motion deconvoluted from the free ground surface motion at the finished grade. The ESBWR Reactor Building (RB) and Control Building (CB) foundations are embedded at depth of 20 m (66 ft) and 14.9 m (49 ft), respectively. The Fuel Building (FB) shares a common foundation mat with the RB. The development of design ground motion is delineated in the following subsections.

3.7.1.1.1 Low-Frequency Ground Motion

The ground response spectra for low-frequency ground motion are developed in accordance with Regulatory Guide 1.60 anchored to 0.3g and specified at the foundation level in the free field for generic sites. The 0.3g SSE design response spectra for various damping ratios are shown in Figures 3.7-1 and 3.7-2 for the horizontal and vertical motions, respectively. The horizontal response spectra are equally applicable to two orthogonal horizontal directions.

Seismic input motions in the form of time histories are generated to envelop the design response spectra. The generic site 0.3g SSE acceleration time histories for two horizontal components

The spectrum figures are associated with 5% damping. The PGA values, corresponding to the spectral acceleration at 100 Hz of the target spectra, are 0.492g at the CB base and 0.469g at the RB/FB base in both horizontal and vertical directions. The time histories are generated under the spectral matching criteria given in NUREG/CR-6728 and the cross-correlations between the three individual components are all less than the 0.16 requirement. Since a more stringent matching criteria of NUREG/CR-6728 is used, a separate Power Spectral Density (PSD) check per SRP 3.7.1.II.1 is not required.

The high-frequency input ground motion thus defined is considered in the basic design seismic analysis for North Anna ESP site condition using the DAC3N computer code.

3.7.1.1.3 Single Envelope Ground Motion

The single envelope ground response spectra are constructed to envelope the low-frequency 0.3g RG 1.60 spectra (Subsection 3.7.1.1.1) and the high-frequency North Anna site-specific spectra (Subsection 3.7.1.1.2). The smoothed target spectra of 5% damping are shown in Table 3.7-2 and in Figures 2.0-1 and 2.0-2. The spectral values up to and including 9 Hz and 10 Hz in the horizontal and vertical directions, respectively, are based on 0.3g RG 1.60 spectra. At higher frequencies the spectral values closely match that of the envelope of North Anna ESP spectra at ESBWR RB/FB and CB foundations as a representative ground motion for Eastern US sites founded on rock. Note that there has never been recorded a seismic event containing simultaneously very high low-frequency excitations and very high high-frequency motions. Therefore, this envelope is very conservative in terms of energy content and is used to verify the basic design previously discussed.

A single set of three orthogonal, statistically independent time histories is generated to match the target spectra in accordance with NUREG/CR-6728 criteria. The computed response spectra are compared with the corresponding target spectra in Figures 3.7-38 through 3.7-40 for H1, H2 and vertical components, respectively. Spectral matching tests for 5% damping only is consistent with the recommendations of NUREG/CR-6728 of specifying ground-motions in terms of 5% spectra. Use of 5% only is considered sufficient because there is a strong correlation among the response-spectral ordinates at damping ratios from 1 to 20%. Thus, if a time history matches the 5% target, it is likely to match the targets at other damping ratios. Because a more stringent matching criteria of NUREG/CR-6728 is used, a separate PSD check per SRP 3.7.1.II.1 is not required. Tests performed in NUREG/CR-6728 indicate that the response-spectrum tests are sufficient.

The acceleration time histories are shown in Figures 3.7-41 through 3.7-43, together with corresponding velocity and displacement time histories. Each time history has a total duration of 40 seconds with time steps of 0.005 seconds. The strong motion duration is 7.8 seconds for H1, 12 seconds for H2 and 8.9 seconds for vertical. The cross-correlations between the three individual components are all less than the 0.16 requirement.

The single envelope ground motion is considered in the design basis seismic analysis for all generic uniform and layered sites using DAC3N and SASSI computer codes, respectively.

3.7.1.2 Percentage of Critical Damping Values

Damping values of various structures and components are shown in Table 3.7-1 for use in SSE dynamic analysis. These damping values are consistent with Regulatory Guide 1.61 SSE damping except for the damping value of cable trays and conduits.

The damping values shown in Table 3.7-1 for cable trays and conduits are based on the results of over 2000 individual dynamic tests conducted by Bechtel/ANCO for a variety of raceway configurations (Reference 3.7-5). The damping value of conduit systems (including supports) is 7% constant. For HVAC ducts and supports the damping value is 7% for companion angle or pocket lock construction and is 4% for welded construction.

For ASME Section III, Division 1 Class 1, 2, and 3, and ASME B31.1 piping systems, alternative damping values specified in Figure 3.7-37 may be used. The damping values shown in Table 3.7-1 are applicable to all modes of a structure or component constructed of the same material. Damping values for systems composed of subsystems with different damping properties are obtained using the procedures described in Subsection 3.7.2.13.

3.7.1.3 Supporting Media for Category I Structures

The Seismic Category I structures have concrete mat foundations supported on soil, rock or compacted backfill. The embedment depth, dimensions of the structural foundation, and total structural height for each structure are given in Subsection 3.8.5.1. The soil conditions considered for soil-structural interaction analysis are described in Appendix 3A.

3.7.2 Seismic System Analysis

This section applies to building structures that constitute primary structural systems (RB, FB, and CB). The reactor pressure vessel (RPV) is not a primary structural component but, due to its dynamic interaction with the supporting structure, it is considered as another part of the primary system of the reactor building for the purpose of dynamic analysis. Table 3.7-3 provides a summary of methods of seismic analysis for primary building structures.

3.7.2.1 Seismic Analysis Methods

Analysis can be performed using any of the following methods:

- time history method;
- response spectrum method;
  - singly- or multi-supported system with Uniform Support Motion (USM); or
  - multi-supported system with Independent Support Motion (ISM); or
- static coefficient method.

3.7.2.1.1 Time History Method

The response of a multi-degree-of-freedom linear system subjected to external forces and/or uniform support excitations is represented by the following differential equations of motion in the matrix form:

down by operational perturbations resulting from the seismic event. The plant is shut down if the walkdown inspections discover damage to equipment that would affect the safe operation of the plant, or the recorded motion in the free field in any of the three directions (two horizontal and one vertical) exceeds both the response spectrum limit and the CAV limit as follows:

- Response spectrum limit is exceeded if:
  - at frequencies between 2 and 10 Hz, the recorded response spectral accelerations of 5% damping exceed 1/3 of the corresponding SSE values or 0.2g, whichever is greater; or
  - at frequency between 1 and 2 Hz, the recorded response spectral velocities of 5% damping exceed 1/3 of the corresponding SSE values or 152 mm/sec (6 in/sec), whichever is greater.
- CAV limit is exceeded if the CAV value calculated according to the procedures in Reference 3.7-12 is greater than 0.16 g-sec.

Following plant shutdown, post-shutdown inspections and tests are performed in accordance with Reference 3.7-10, as permitted by Regulatory Guide 1.167, to determine the physical condition of the plant and its readiness to resume operation. After plant is restarted (or prior to restart if the earthquake caused significant damage to the plant per Reference 3.7-10 definition), long-term evaluations are carried out for engineering assessments of plant structures and equipment using the actual event records to assure their long-term reliability in accordance with Reference 3.7-10 guidelines, as permitted by Regulatory Guide 1.167.

3.7.4.5 In-Service Surveillance

The seismic instrumentation operates during all modes of plant operation including periods of plant shutdown. The maintenance and repair procedures keep the maximum number of instruments in service during plant operation and shutdown. The walkdown inspection following a felt earthquake ensures the safety condition of the plant.

Each of the seismic instruments is demonstrated operable by the performance of the channel check, channel calibration, and channel functional test operations. The channel checks are performed every two weeks for the first three months of service after startup. After the initial three-month period and three consecutive successful checks, the channel checks are performed on a monthly basis. The channel calibration are performed during each refueling. The channel functional test is performed every 6 months.

3.7.5 COL Information

None.

3.7.6 References

3.7-1 International Building Code – 2003 by International Code Council, Inc. (300-214-4321).

3.7-2 Dominion Nuclear North Anna, LLC, "North Anna Early Site Permit Application," Revision 4, May 2005.

3.8 SEISMIC CATEGORY I STRUCTURES

The Seismic Category I structures include the Concrete Containment, the Reactor Building (RB), the Control Building (CB) and the Fuel Building (FB).

3.8.1 Concrete Containment

The containment structure is designed to house the primary nuclear system and is part of the containment system, whose functional requirement is to confine the potential release of radioactive material in the event of a LOCA. The containment structure is totally enclosed by the Reactor Building. This subsection describes the concrete containment structure. Steel components of the containment that resist pressure and are not backed by structural concrete are discussed in Subsection 3.8.2. A detailed functional description of the containment system is presented in Section 6.2.

3.8.1.1 Description of the Containment

3.8.1.1.1 Concrete Containment

The containment is shown in the summary report contained in Appendix 3G Subsection 3G.1. Appendix 3G Subsection 3G.1 contains a more detailed description of the containment and the analytical models, inputs, analytical procedures, figures, results from controlling load combinations, components with controlling concrete stresses, reinforcement stresses, and liner strains for the concrete containment vessel.

The containment is a low-leakage reinforced concrete structure with an internal steel liner in the drywell and suppression chamber to serve as a leaktight membrane. The containment is a cylindrical shell structure, which consists of the reactor pressure vessel (RPV) pedestal, the containment cylindrical wall, the top slab, the suppression pool slab and the foundation mat. The containment is divided by the diaphragm floor and the vent wall into a drywell chamber (upper and lower) and a suppression chamber. The top slab of the containment is an integral part of the Isolation Condenser/Passive Containment Cooling (IC/PCC) pools and the services pools for storage of Dryer/Separator and other uses. The pool girders, which serve as barriers of the pools, rigidly connect the top slab and the Reactor Building (RB) walls. The RB floors that surround the containment walls and walls that are under the suppression pool floor slab are also integrated structurally with the concrete containment. The containment foundation mat is continuous with the RB foundation mat, and the Fuel Building (FB) as well. The containment and the structures integrated with the containment are constructed of cast-in-place, reinforced concrete.

The configuration of the containment is shown in Figure 3.8-1. The key dimensions of the containment are summarized in Table 3.8-1.

The containment foundation mat is a flat plate (See Table 3.8-13 and Figure 3.8-1). The foundation mat reinforcement consists of a top layer of reinforcement, a bottom layer of reinforcement, and vertical shear reinforcement. The bottom layer of reinforcement is arranged in a rectangular grid. The top layer of reinforcement is arranged in a rectangular grid at the center of the mat and then radiates outward in a polar pattern in order to avoid interference with the RPV pedestal reinforcement.

done using the computer program NASTRAN, as described in Subsection 3.8.1.4.1.1. The global analysis considers the major structural configurations, including RCCV with the internal steel components, the Reactor Building with floor connections to the RCCV, and the basemat, using plate element modeling and linear material assumptions. The selected sections from the global model used for the section sizing design calculations are described in Appendix 3G Subsection 3G.1.5.4.

The SSDP-2D program module, described in Appendix 3C, is used to determine the extent of concrete cracking at these sections and the resulting concrete and rebar stresses. The SSDP-2D program models a single element of unit height, unit width, and depth equal to the thickness of the wall or slab. The calculations used in SSDP-2D assume that the concrete is isotropic and linear elastic but with zero tensile strength. The methods used in SSDP-2D can also account for the reduced thermal forces and moments due to concrete cracking when the option of thermal cracking is selected. However, the redistribution of section forces and moments that occurs due to concrete cracking under thermal loads is not calculated by the SSDP-2D procedure. To account for the concrete cracking effects and redistribution of forces and moments from thermal loads, the procedure described in Subsection 3.8.1.4.1.3 is used and the option of thermal cracking in SSDP-2D is not selected.

The input data for the SSDP-2D program consist of the membrane forces, shear forces and bending moments calculated by the NASTRAN linear analysis. The section forces and moments from thermal loads under LOCA are scaled according to the procedure in the next subsection before combination with the other load cases. The areas of the reinforcing steel in terms of steel area to concrete cross-section ratio are based on the design shown in Appendix 3G. The evaluation of containment structural adequacy is shown in Subsection 3.8.1.5.

The procedures for the design and analysis of the liner plate and its anchorage system are in accordance with the provisions of the ASME Code Section III, Division 2, Subarticle CC-3600. The liner plate anchor design considers deviations in geometry due to fabrication and erection tolerances however; strains associated with construction-related liner deformations are excluded when calculating liner strains for the Service and factored load combinations according to ASME Code Section III, Division 2, Subarticle CC-3720. The strains and stresses in the liner and its anchors are within allowable limits defined by the ASME Code Section III, Division 2, Subarticle CC-3720.

3.8.1.4.1.3 Concrete Cracking Considerations

For thermal loads, the effects of concrete cracking must be considered in developing the internal forces and moments in the section. For these loads, concrete cracking relieves the thermal stress, as well as redistributes the internal forces and moments on the sections from those obtained from a linear analysis. For the LOCA thermal loads, a half-symmetric, 3D continuum element model is used to evaluate the redistribution of forces due to concrete cracking. This analysis is performed with the ABAQUS/ANACAP-U software, which is described in Appendix 3C. A linear analysis, using the solid element model, is first performed as a baseline analysis with benchmarking to the linear plate element design model using NASTRAN. A nonlinear, concrete cracking analysis is then performed under the same thermal loading conditions. In each case, the section forces and moments are calculated from the section stresses.

shall be used for evaluation. The ultrasonic acceptance standard of IWE-3511.3 for Class MC components shall also be applied to metallic liners of Class CC components.

3.8.1.7.3.12 Evaluation of Inaccessible Areas

During operation areas inaccessible for examination for acceptability shall be evaluated, if conditions exist in accessible areas that indicate the presence of or result in the degradation of the inaccessible areas. For each such area identified, the following information shall be included in the Inservice Inspection (ISI) Summary report required by ASME Section XI, IWA-6000:

(1) A description of the type and estimated extent of degradation, and the conditions that led to the degradation.

(2) An evaluation of each area and the result of the evaluation

(3) A description of necessary corrective actions.

3.8.2 Steel Components of the Reinforced Concrete Containment

3.8.2.1 Description of the Steel Containment Components

The ESBWR has a reinforced concrete containment vessel (RCCV) as described in Subsection 3.8.1. This section describes the following steel components of the concrete containment vessel:

(1) Personnel Air Locks

(2) Equipment Hatches

(3) Penetrations

(4) Drywell Head

3.8.2.1.1 Personnel Air Locks

Two personnel air locks with an inside diameter sufficient to provide 1850 mm high by 750 mm wide minimum clearance above the floor at the door way are provided. One of these air locks provides access to the upper drywell and the other provides access to the lower drywell.

Lock and swing of the doors is by manual and automatic means. The locks extend radially outward from the RCCV into the Reactor Building and are supported by the RCCV only. The minimum clear horizontal distance not impaired by the door swing is 1850 mm.

Each personnel air lock has two pressure-seated doors interlocked to prevent simultaneous opening of both doors and to ensure that one door is completely closed before the opposite door can be opened. The design is such that the interlocking is not defeated by postulated malfunctions of the electrical system. Signals and controls that indicate the operational status of the doors are provided. Provision is made to permit temporary bypassing of the door interlock system during plant cold shutdown. The door operation is designed and constructed so either door may be operated from inside the containment vessel, inside the lock, or from outside the containment vessel.

The lock is equipped with a digital readout pressure transducer system to read inside and outside pressures. Quick-acting valves are provided to equalize the pressure in the air lock when

personnel enter or leave the containment vessel. The personnel air locks have a double sealed flange with provisions to pressure test the space between the seals of the flange.

3.8.2.1.2 Equipment Hatch

Three equipment hatches are provided. One of these serves the upper drywell and another serves the lower drywell. The third equipment hatch provides personnel and equipment access to the suppression chamber airspace.

The equipment hatch covers have a double sealed flange with provisions to pressure test the space between the seals of the flange. A means for removing and handling the equipment hatch cover is provided. The hoisting equipment and hoisting guides are arranged to minimize contact between the doors and seals during opening and closing. The equipment hatch includes the electric motorized hoist with pushbutton control station, lifting slings, hoist supports, hoisting guides, access platforms, and ladders for access to the dogged position of the door and hoist, latches, seats, dogging devices, and tools required for operation and maintenance of the hatch.

The equipment hatches and covers are entirely supported by the RCCV.

3.8.2.1.3 Penetrations

In addition to the personnel airlocks, equipment hatches and drywell head, other steel components of the concrete containment vessel include piping and electrical penetrations. The major piping penetrations are associated with main steam and feedwater lines. Electrical penetrations are described in Subsection 8.3.3.7. A summary of various containment penetrations is given in Section 6.2. The state of stress and behavior of the containment wall around these openings is determined by the use of analytical numerical techniques. The analysis of the area around the penetrations consists of a three-dimensional finite element analysis with boundaries extending to a region where the discontinuity effects of the opening are negligible.

The RCCV penetrations are categorized into two basic types. These types differ with respect to whether the penetration is subjected to a hot or cold operational environment.

The cold penetrations pass through the RCCV wall and are embedded directly in it. The hot penetrations do not come in direct contact with the RCCV wall but are provided with a thermal sleeve, which is attached to the RCCV wall. The thermal sleeve is attached to the process pipe at distance from the RCCV wall to minimize conductive heat transfer to the RCCV wall. With regard to the local areas of concrete around high energy penetrations, thermal analyses have been carried out to demonstrate that concrete temperature limits in ASME Section III, CC-3440 are satisfied. In all cases the concrete temperature is lower than 93°C (200°F) for normal operation, and lower than 177°C (350°F) for accident condition. The sleeve length for hot penetrations is designed to meet these temperature requirements.

Figures 3.8-6, 3.8-7, 3.8-8, 3.8-9, 3.8-10 and 3.8-11 show the typical details for the containment mechanical and electrical penetrations.

3.8.2.1.4 Drywell Head

A 10,400 mm diameter opening in the RCCV upper drywell top slab over the RPV is covered with a removable steel torispherical drywell head, which is part of the pressure boundary. This structure is shown in Appendix 3G Figure 3G.1-51. The drywell head is designed for removal

internal structures as applicable. The reactor shield wall is also designed to the Annulus Pressurization (AP) loads, which are loads and pressures directly on the reactor shield wall caused by a rupture of a pipe within the reactor vessel shield wall annulus region.

3.8.3.3.2 Load Combination

The load combinations and associated acceptance criteria for steel internal structures of the containment are listed in Table 3.8-7.

3.8.3.4 Design and Analysis Procedures

The design of steel internal structures is performed in accordance with the general practice of the AISC-N690. See Table 3.8-7 for more details. The effects of concrete cracking of the containment structure on the accidental thermal stresses in the containment internal structures are accounted for in the form of thermal ratios as described in Subsection 3.8.1.4.1.3.

See Subsection 3.8.3.7 for accessibility to equipment, valves, instrumentation, welds, supports, etc. for operation, inspection or removal.

3.8.3.4.1 Diaphragm Floor

The diaphragm is included in the finite-element model described in Subsection 3.8.1.4.1.1. The design and analysis is based on the elastic method. All loads are resisted by the integral action of the top plate, bottom plate and support beams. The radial support beams are welded to the diaphragm floor, so they form an integral structure.

3.8.3.4.2 RPV Support Bracket

The RPV support bracket is included in the finite-element model described in Subsection 3.8.1.4.1.1.

The design and analysis is based on the elastic method. All loads from RPV support and RSW are resisted by the integral action of eight (8) separate brackets located separately. In order to provide a low friction coefficient ($\approx$ 0.15) that minimizes the resistance to sliding in the RPV foot/RPV support bracket interface, bearing plates of Lubron alloy GA50 are placed between the sliding components. Therefore, there are no significant thermal expansion loads from the RPV supports acting on the RPV support brackets.

Two steel guide blocks at both sides of each RPV foot resist and transmit the horizontal (tangential) forces to the RPV support bracket.

3.8.3.4.3 Reactor Shield Wall

The reactor shield wall is included in the finite-element model described in Subsection 3.8.1.4.1.1. The design and analysis is based on the elastic method. All loads including those from the RPV stabilizer are resisted by the thick steel cylinder supported by the RPV support bracket.

3.8.3.4.4 Vent Wall

The vent wall is included in the finite-element model described in Subsection 3.8.1.4.1.1.

3.8.3.7 Testing and In-service Inspection Requirements

A formal program of testing and in-service inspection is not planned for the internal structures except the diaphragm floor, and vent wall. The other internal structures are not directly related to the functioning of the containment system; therefore, no testing or inspection is performed.

However, during the operating life of the plant the condition of these other internal structures is monitored per 10 CFR 50.65 as clarified in RG 1.160, in accordance with Section 1.5 of RG 1.160.

Testing and in-service inspection of the diaphragm floor and vent wall are directly related to the functioning of the containment system and are discussed in Subsection 3.8.1.7.

Space Control is exercised in the ESBWR by means of a 3D model. It is the means by which interference checking and space control is accomplished. It includes all safety and non-safety related SSCs. Items are added to the model as it is being developed by stages depending on criticality to the plant and construction sequence of the item. Accessibility to equipment, valves, instrumentation, welds, supports, etc. for operation, inspection or removal is characterized by sufficient space to allow unobstructed access and reach of site personnel. Therefore, aisles, platforms, ladders, handrails, etc. are reviewed as the components are laid out. Interferences with access ways, doorways, walkways, truck ways, lifting wells, etc. are constantly monitored.

This method of configuration control is maintained and documented during the plant layout process. Remote tooling is considered only if for some layout reasons the required inspection could not be carried out otherwise.

3.8.3.8 Welding Methods and Acceptance Criteria for Structural and Building Steel

Welding activities are performed with written procedures, combining with the requirements of the American Institute of Steel Construction (AISC) Manual of Steel Construction. The visual acceptance criteria comply with American Welding Society (AWS) Structural Welding Code D1.1 and Nuclear Construction Issue Group (NCIG) Standard, "Visual Weld Acceptance Criteria for Structural Welding at Nuclear Plants", NCIG-01.

3.8.4 Other Seismic Category I Structures

Other Seismic Category I structures which are not inside the containment and which constitute the ESBWR Standard Plant are Reactor Building (RB), Control Building (CB) and Fuel Building (FB). Figure 1.1-1 shows the spatial relationship of these buildings. Although the Radwaste Building (RW) that houses non safety-related facilities is not a Seismic Category I structure, it is designed to meet requirements as defined in Regulatory Guide 1.143 under Safety Class RW-IIa. The RB and FB are built on a common foundation mat and structurally integrated into one building. The other structures in close proximity to these structures are the Turbine Building and Service Building. They are structurally separated from the other ESBWR Standard Plant buildings. Seismic gaps capable of a minimum 100 mm free movement are provided between independent Nuclear Island buildings to eliminate seismic interaction.

Among the Seismic Category I structures within the ESBWR Standard Plant, other than the containment structure, only the RB contains certain rooms that have high-energy pipes, and therefore these rooms are more structurally demanding. The main steam tunnel walls protect the RB from potential impact by rupture of the high-energy main steam pipes that extend to the

The CB houses the essential electrical, control and instrumentation equipment, the control room for the Reactor and Turbine Buildings and the CB HVAC equipment. The CB is a Seismic Category I structure that houses control equipment and operation personnel.

The CB is a reinforced concrete box type shear wall structure consisting of walls and slabs and is supported on a foundation mat. Steel framing is composite with concrete slab and is used to support the slabs for vertical loads. The CB is a shear wall structure designed to accommodate all seismic loads with its walls and connected floors. Therefore, frame members such as beams or columns are designed to resist vertical loads and to accommodate deformations of the walls in case of earthquake conditions.

The summary report for the CB is in Appendix 3G Subsection 3G.2. This report contains a description of the CB, the loads, load combinations, reinforcement stresses, and concrete reinforcement details for the basemat, seismic walls, and floors.

3.8.4.1.3 Fuel Building

The Fuel Building (FB) is integrated with the RB, sharing a common wall between the RB and the FB and a large common foundation mat (see Section 1.2). The key dimensions of the FB are summarized in Table 3.8-8.

The FB houses the spent fuel pool facilities and their supporting system and HVAC equipment. The FB is a Seismic Category I structure except for the penthouse that houses HVAC equipment. The penthouse is a Seismic Category II structure.

The FB is a reinforced concrete box type shear wall structure consisting of walls and slabs and is supported on a foundation mat. Concrete and/or steel framing is composite with a concrete slab and is used to support the slabs for vertical loads. The FB is a shear wall structure designed to accommodate all seismic loads with its walls and connected floors. Therefore, frame members such as beams or columns are designed to resist vertical loads and to accommodate deformations of the walls in case of earthquake conditions.

The summary stress report for the FB is in Appendix 3G Subsection 3G.3. This report contains a description of the FB, the loads, load combinations, reinforcement stresses, and concrete reinforcement details for the basemat, seismic walls, and floors.

3.8.4.1.4 (Deleted)

3.8.4.1.5 Radwaste Building

The Radwaste Building (RW) is shown in Section 1.2.

The Radwaste Building (RW) is a reinforced concrete box type structure consisting of walls and slabs and is supported on a foundation mat. The key dimensions of the RW are summarized in Table 3.8-8.

The RW houses the equipment and floor drain tanks, sludge phase separators, resin hold up tanks, detergent drain tanks, a concentrated waste tank, chemical drain collection tank, associated pumps and mobile systems for the radioactive liquid and solid waste treatment systems.

The RW is a Non-Seismic Category (NS) structure. The RW is designed according to the safety classifications defined in Regulatory Guide 1.143 Category RW-IIa.

3.8.4.2.5 Welding of Pool Liners

All pool liner welds, including the spent fuel pool liner welds, are visually inspected before starting any other NDE method. The visual weld acceptance criteria are defined in AWS Structural Welding Code, D1.1. In accordance with approved procedures, the welded seams of the liner plate are inspected by:

- Liquid Penetrant Examinations. To be carried out on all liner plate butt, fillet, corner and tee welds in accordance with ASME, Section V, Article 6 requirements. The acceptance criteria are in accordance with the requirements of ASME Section III, NE 5352.
- Helium sniffer test or vacuum box technique in accordance with ASME Section V, Article 10 requirements. Any evidence of leakage is unacceptable.

After construction is finished, each isolated pool is leak tested.

The liner welds for all pools outside of the RCCV, including the spent fuel pool, are backed by leak chase channels and a leak detection system to monitor any leakage during plant operation. The leak chase channels are grouped according to the different pool areas and direct any leakage to area drains. This allows both leak detection and determination of where leaks originate. The functioning of the leak chase channels are checked prior to completion of the pool liner installation.

3.8.4.2.6 (Deleted)

3.8.4.3 Loads and Load Combinations

3.8.4.3.1 Reactor Building

3.8.4.3.1.1 Loads and Notations

This section presents only the loads that are applied to the RB directly. Other loads, which are applied to the RCCV only but have effects on RB structures because of common foundation mat, like P_a and T_a, are also considered in the RB design.

Loads and notations are as follows:

D = Dead load of structure plus any other permanent load.

L = Conventional floor or roof live loads, movable equipment loads, and other variable loads such as construction loads. The following live loads are used:

- Concrete floor slabs – 4.8 kPa.
- Concrete roofs – 2.9 kPa.
- Construction live load on floor framing in addition to dead weight of floor – 2.4 kPa.

Live Load L, includes floor area live loads, laydown loads, nuclear fuel and fuel transfer casks, equipment handling loads, trucks, railroad vehicles and similar items. The floor area live load is omitted from areas occupied by equipment whose weight is specifically included in dead load. Live load is not omitted under equipment where access is provided, for instance, an elevated tank on four legs.

3.8.4.3.4 Radwaste Building

Loads and load combinations listed in Table 3.8-9 Item 32, Safety Class RW-IIa is used for the design of the RW.

3.8.4.3.5 (Deleted)

3.8.4.4 Design and Analysis Procedures

3.8.4.4.1 Reactor Building, Control Building and Fuel Building

The Reactor Building (RB), Control Building (CB) and Fuel Building (FB) are analyzed using the linear elastic finite element (FE) computer program NASTRAN described in Appendix 3C.

As described in Subsection 3.8.4.1.3, the RB and FB is integrated into one building. Therefore, the RB and FB structure is analyzed using a common FE model, which includes the RB and FB and also the concrete containment. The model is described in Appendix 3G Subsection 3G.1.4.1.

The FE analysis model of the CB includes the entire structure. The details of the FE model of the CB are described in Appendix 3G Subsection 3G.2.4.1.

The foundation soil is simulated by a set of horizontal and vertical springs in each model. The soil spring constraints are calculated based on the properties of the soil spring used in the Soil – Structure Interaction (SSI) analysis model, which is described in Appendix 3A. The constraints by soil surrounding the buildings are conservatively neglected in the FE models.

3.8.4.4.2 Radwaste Building

The RW is described in Section 3.8.4.1.5. The design is in accordance with the criteria in Table 3.8-9 Item 32 for Safety Class RW-IIa.

3.8.4.5 Structural Acceptance Criteria

3.8.4.5.1 Reactor Building

The acceptance criteria for the design of the safety-related reinforced concrete structure are included in Table 3.8-15. "U" in Table 3.8-15 is the section strength required to resist design loads based on the strength design method described in Table 3.8-9 item 1 and in SRP 3.8.4 Section II.3.

The acceptance criteria for the design of the safety-related steel structure are included in Table 3.8-16. Allowable elastic working stress, S, is the allowable stress limit specified in Part 1 of ANSI/AISC N-690.

The design criteria preclude excessive deformation of the Reactor Building.

3.8.4.5.2 Control Building

The acceptance criteria for the design of the Control Building are same as the Reactor Building in Section 3.8.4.5.1.

3.8.4.5.3 Fuel Building

Same as the RB in 3.8.4.5.1.

3.8.4.5.4 Radwaste Building

Structural acceptance criteria and materials criteria for the RW is in accordance with Item 32 in Table 3.8-9 for Safety Class RW-IIa.

3.8.4.5.5 (Deleted)

3.8.4.6 Material, Quality Control and Special Construction Techniques

This subsection contains information related to the materials, quality control and special construction techniques used in the construction of the other Seismic Category I structures.

3.8.4.6.1 Concrete

Concrete material is the same as described in Section 3.8.1.6.1 with the following exception: The specified compressive strength is 34.5 MPa. Concrete is batched and placed according to ACI 349-01.

3.8.4.6.2 Reinforcing Steel

Reinforcing steel is the same as in Section 3.8.1.6.2.

3.8.4.6.3 Splices of Reinforcing Steel

Splices of reinforcing steel are the same as in Section 3.8.1.6.3 except that placing and splicing is in accordance with ACI 349-01.

3.8.4.6.4 Quality Control

Quality control is the same as in Section 3.8.1.6.5 except that the Construction Specification will reference ACI 349-01 and applicable Regulatory Guides. For welding of reinforcing bars, inspection and documentation requirements conform to ASME Code Section III, Division 2 also.

3.8.4.6.5 Special Construction Techniques

There is composite construction in the other Seismic Category I structures. Some of the components, such as rebar cages, are pre-assembled and lifted into place. As described in Section 3.8.4.1.1, the RB floor slabs are composed of reinforcing bars, steel plates, and concrete. Floor slab steel plates, which are reinforced by welded shapes, are assembled in discrete segments that are lifted into place. The steel plates are also used as formwork for concrete fill.

3.8.4.7 Testing and In-Service Inspection Requirements

Other Seismic Category I structures are monitored per 10 CFR 50.65 as clarified in RG 1.160, in accordance with Section 1.5 of RG 1.160.

3.8.5 Foundations

This section describes foundations for all Seismic Category I structures of the ESBWR Standard Plant.

3.8.5.1 Description of the Foundations

The Reactor Building (RB) including the containment and Fuel Building (FB) are built on a common foundation mat as described in Subsection 3.8.4. The foundation of the Control Building (CB) is separated from the foundation of the RB and FB.

The foundation of the RB and FB is a rectangular reinforced concrete mat. Its key dimensions are shown in Table 3.8-13. The foundation mat is constructed of cast-in-place conventionally reinforced concrete. It supports the RB, the FB, the containment structure, and other internal structures. The containment structure foundation is defined as within the perimeter or the exterior surface of the containment structure. The containment foundation mat details are discussed in Subsection 3.8.1.1.1.

The Control Building foundation is rectangular reinforced concrete mat. The key dimensions are included in Table 3.8-13.

The foundation for Category 1 structures is contained in the summary stress reports for their respective buildings. The Reactor Building foundation is contained in Appendix 3G Subsection 3G.1, the Control Building foundation is in Appendix 3G Subsection 3G.2, and the Fuel Building foundation is in Appendix 3G Subsection 3G.3. The summary stress report contains a section detailing safety factors against sliding, over turning, and floatation.

3.8.5.2 Applicable Codes, Standards and Specifications

The applicable codes, standards, specifications and regulations are discussed in Subsection 3.8.1.2 for the containment foundation and in Subsection 3.8.4.2 for the other Seismic Category I foundations.

3.8.5.3 Loads and Load Combinations

The loads and load combinations for the containment foundation mat are given in Subsection 3.8.1.3. The loads and load combinations for the other Seismic Category I structure foundations are given in Subsection 3.8.4.3.

The loads and load combinations for all Seismic Category I foundations examined to check against sliding and overturning due to earthquakes, winds and tornados, and against flotation due to floods are listed in Table 3.8-14.

3.8.5.4 Design and Analysis Procedures

The foundations of Seismic Category I structures are analyzed using the methods where the transfer of loads from the foundation mat to the supporting foundation media is determined by elastic methods.

Bearing walls and columns carry all the vertical loads from the structure to the foundation mat. Lateral loads are transferred to shear walls by the roof and floor diaphragms. The shear walls then transmit the loads to the foundation mat.

The design of the mat foundations for the structures of the plant involves primarily determining shear and moments in the reinforced concrete and determining the interaction of the substructure with the underlying foundation medium. For a mat foundation supported on soil or rock, the main objectives of the design are (1) to maintain the bearing pressures within allowable limits,

particularly due to overturning forces, and (2) to ensure that there is adequate frictional and passive resistance to prevent sliding of the structure when subjected to lateral loads.

The foundation mat is analyzed using the linear elastic finite element (FE) computer program NASTRAN as described in Sections 3.8.1.4.1.1 and 3.8.4.4.1. The type of finite elements used to model the foundation mat is the thick shell type of elements that account for out-of-plane shear deformation also. The foundation mat resists out-of-plane forces applied from superstructures and foundation soil. Bending moments in the foundation mat are evaluated for the resultant out-of-plane forces. The foundation soil is modeled with elastic springs and connected to the foundation mat elements in the FE model. By means of using this method, the soil-structure interaction (SSI) is considered in the foundation design, and the requirement of SRP 3.8.5 II 4.a is satisfied.

The design loads considered in analysis of the foundations are the worst resulting forces from the superstructures and loads directly applied to the foundation mat due to static and dynamic load combinations.

The worst case scenario for foundation base mat design is the soft soil since it is subject to largest deformation. From the NASTRAN analysis the results are scanned for the worst loads in the mat sections and are selected for checking the section. This enveloping of most severe loading is done for all loading considered in the analysis. In order to confirm the appropriateness of this condition, basemat deformation and sectional moment are compared between the soft soil case (Vs = 300 m/sec) and the hard rock case (Vs = 1700 m/sec). Basemat deformation for the soft soil condition is much larger than that of the hard rock condition. Bending moments for the soft soil are larger than those for the hard rock with few exceptions. The higher bending moments at few locations for the hard rock site has no impact on the design since they are much less than the maximum moments of the soft soil site on which rebar sizing is based.

In the global FEM model the soil springs are assumed to be two-way spring capable of withstanding compression and tension. To evaluate the effect of potential uplift of the basemat under seismic loads, the soil springs, once in tension, are removed through an iterative process. This iterative process is continued until there are no more springs in tension. The analysis results confirmed the adequacy of the basemat design. Details are provided in Appendix 3G.1.5.5.1.

The selected waterproofing material for the bottom of the basemat is a chemical crystalline powder that is added to the mud mat mixture forming a water proof barrier when cured. No membrane waterproofing is used under the foundations in the ESBWR.

The standard ESBWR design is developed using a range of soil conditions as detailed in Appendix 3A. The minimum requirements for the physical properties of the site-specific subgrade materials are furnished in Table 2.0-1. COL actions are addressed in Table 2.0-2, Subsection 2.5.4. Settlement of the foundations, and differential settlement between foundations for the site-specific foundations medium, is calculated, and safety-related systems (i.e., piping, conduit, etc.) designed for the calculated settlement of the foundations. The effect of the site-specific subgrade stiffness and calculated settlement on the design of the Seismic Category I structures and foundations is evaluated.

A detailed description of the analytical and design methods for the foundations of the RB including the containment, the CB and the FB is included in Appendix 3G.

3.8.5.5 Structural Acceptance Criteria

The main structural criteria for the containment portion of the foundation are to provide adequate strength to resist loads and sufficient stiffness to protect the containment liner from excessive strain. The acceptance criteria for the containment portion of the foundation mat are presented in Subsection 3.8.1.5. The structural acceptance criteria for the RB, CB and FB foundations are described in Subsection 3.8.4.5.

The allowable factors of safety of the ESBWR structures for overturning, sliding, and flotation are included in Table 3.8-14. The calculated factors of safety are shown in Appendix 3G for each foundation mat evaluated according to the following procedures.

The factor of safety against overturning due to earthquake loading is determined by the energy approach described in Subsection 3.7.2.14.

The factor of safety against sliding is defined as:

$$FS = (F_s + F_p)/(F_d + F_h)$$

where F_s and F_p are the shearing and sliding resistance, and passive soil pressure resistance, respectively. F_d is the maximum lateral seismic force including any dynamic active earth pressure, and F_h is the maximum lateral force due to loads other than seismic loads.

The factor of safety against flotation is defined as:

$$FS = F_{DL}/F_B$$

where F_{DL} is the downward force due to dead load and F_B is the upward force due to buoyancy.

3.8.5.6 Materials, Quality Control, and Special Construction Techniques

The foundations of Seismic Category I structures are constructed of reinforced concrete using proven methods common to heavy industrial construction. For further discussion, see Subsection 3.8.1.6.

3.8.5.7 Testing and In-Service Inspection Requirements

The foundations of Seismic Category I structures are monitored per 10 CFR 50.65 as clarified in RG 1.160, in accordance with Section 1.5 of RG 1.160.

3.8.6 COL Information

None.

Table 3.8-6

Codes, Standards, Specifications, and Regulations Used in the Design and Construction of Seismic Category I Internal Structures of the Containment

Specification Reference Number	Specification or Standard Designation	Title
1	ACI 301-05	Specifications for Structural Concrete
2	ACI 347-04	Guide to Formwork for Concrete
3	ACI 305R-99	Hot Weather Concreting
4	ACI 211.1-91	Standard Practice for Selecting Proportions for Normal, Heavy Weight and Mass Concrete
5	ACI 315-99	Details and Detailing of Concrete Reinforcement
6	ACI 306.1-90	Standard Specification for Cold Weather Concreting (Reapproved 2002)
7	ACI 309R-05	Guide for the Consolidation of Concrete
8	ACI 308.1-98	Standard Specification for Curing Concrete
9	ACI 212.3R-04	Chemical Admixtures for Concrete
10	ACI 214R-02	Evaluation of Strength Test Results of Concrete
11	ACI 311.5-04	Guide for Concrete Plant Inspection and Testing of Ready-Mixed Concrete
12	ACI 304R-00	Guide for Measuring, Mixing, Transporting, and Placing Concrete
13	ACI 349-01/349R-01	Code Requirements for Nuclear Safety-Related Concrete Structures and Commentary
14	Not Used.	
15	ANSI/AISC N690-1994 (R2004) and S2	Specification for the Design, Fabrication, and Erection of Steel Safety-Related Structures for Nuclear Facilities and Supplement No. 2[(1)]
16	AWS D1.1/D1.1M 2004	Structural Welding Code – Steel (AWS D1.1/D1.1M) Rev. 05
17	EPRI NP-5380, 1987	Visual Weld Acceptance Criteria for Structural Welding at Nuclear Power Plants (Nuclear Construction Institute Group) Rev. 2, Sep. 1987.
18	ANSI/ASME NQA-1-1983	Quality Assurance Program Requirements for Nuclear Facilities, 1983 Edition with NQA-1a-1983 Addenda, (Reference Section 17.0)
19	Regulatory Guide 1.54	Service Level I, II and III Protective Coatings Applied to Nuclear Power Plants, Rev. 1, July 2000.
20	Regulatory Guide 1.94	Quality Assurance Requirements for Installation, Inspection, and Testing of Structural Concrete and Structural Steel During the Construction Phase of Nuclear Power Plants, Rev. 1 and Draft 2.
21	Regulatory Guide 1.136	Materials for Concrete Containments (Article CC-2000 of the Code for Concrete Reactor Vessels and Containments), Jun. 1981
22	Regulatory Guide 1.142	Safety-Related Concrete Structures for Nuclear Power Plants (Other than Reactor Vessels and Containments), Nov. 2001

Table 3.8-9

Codes, Standards, Specifications, and Regulatory Guides Used in the Design and Construction of Seismic Category I Structures

Specification Reference Number	Specification or Standard Designation	Title
1	*ACI 349-01/349R-01*	Code Requirements for Nuclear Safety-Related Concrete Structures and Commentary
2	*ANSI/AISC N690-1994 (R2004) & S2*	Specification for the Design, Fabrication and Erection of Steel Safety-Related Structures for Nuclear Facilities and Supplement No. 2[1]
3	*ASME-2004*	Boiler and Pressure Vessel Code Section III, Division 2, Subsection CC
4	ASME-2004	Boiler and Pressure Vessel Code Section III, Subsection NE, Division 1, Class MC
5	ANSI/ASME NQA-1-1983	Quality Assurance Program Requirements for Nuclear Facilities, 1983 Edition with NQA-1a-1983 Addenda, (Reference Section 17.0)
6	AWS D1.1/D1.1M 2004	Structural Welding Code - Steel
7	AWS D1.4 -98	Structural Welding Code - Reinforcing Steel (AWS D1.1/D1.1M) Rev. 05
8	AWS D1.6-99	Structural Welding Code for Stainless Steel
9	ASCE 4-98	Seismic Analysis of Safety-Related Nuclear Structures
10	ASCE 7-02	Minimum Design Loads for Buildings and Other Structures
11	AISC 360-05	2005 AISC Specification for Structural Steel Building
12	SSPC-PA-1-00	Paint Application Specification No. 1, Shop, Field and Maintenance Painting of Steel
13	SSPC-PA-2-04	Paint Application Specification No. 2, Measurement of Dry Coating Thickness with Magnetic Gages
14	SSPC-SP-1-82	Surface Preparation Specification No. 1, Solvent Cleaning
15	SSPC-SP-5-00	Surface Preparation Specification No. 5, White Metal Blast Cleaning
16	SSPC-SP-6-00	Surface Preparation Specification No. 6, Commercial Blast Cleaning
17	SSPC-SP-10-00	Surface Preparation Specification No. 10, Near-White Blast Cleaning
18	Not Used	
19	Not Used	
20	Regulatory Guide 1.28	Quality Assurance Program Requirements (Design and Construction), Aug. 1985
21	Regulatory Guide 1.29	Seismic Design Classification, Sep. 1978
22	Regulatory Guide 1.31	Control of Ferrite Content in Stainless Steel Weld Metal, Apr. 1978
23	Regulatory Guide 1.44	Control of the Use of Sensitized Stainless Steel, May 1973
24	Regulatory Guide 1.54	Service Level I, II and III Protective Coatings Applied to Nuclear Power Plants, Rev. 1, July 2000
25	Regulatory Guide 1.60	Design Response Spectra for Seismic Design of Nuclear Power Plants, Dec. 1973
26	Regulatory Guide 1.61	Damping Values for Seismic Design of Nuclear Power Plants, Oct. 1973
27	Regulatory Guide 1.69	Concrete Radiation-Shields for Nuclear Power Plants, Dec. 1973
28	Regulatory Guide 1.76	Design Basis Tornado for Nuclear Power Plants, Apr. 1974

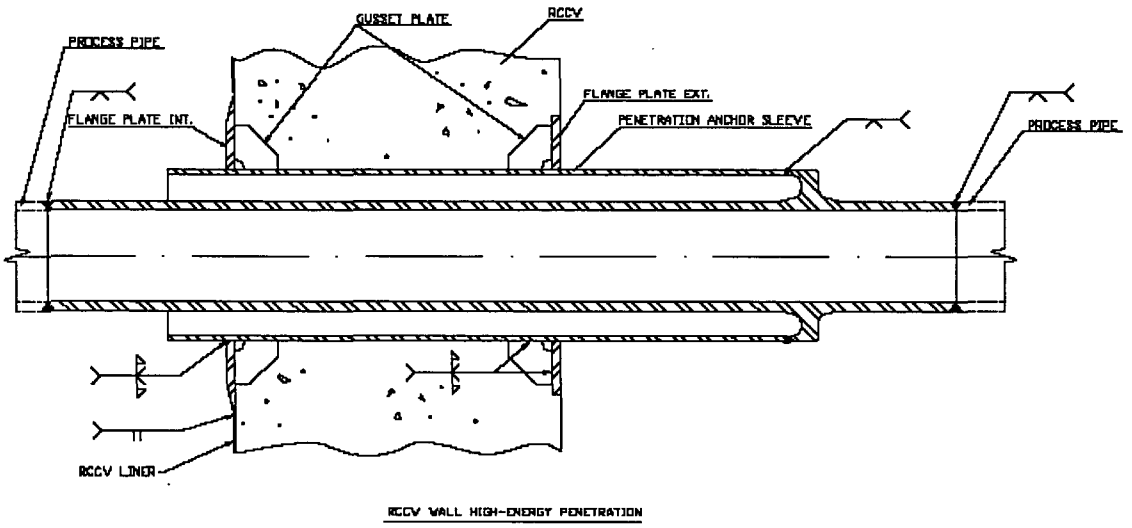

Figure 3.8-6. RCCV Wall High-Energy Penetration

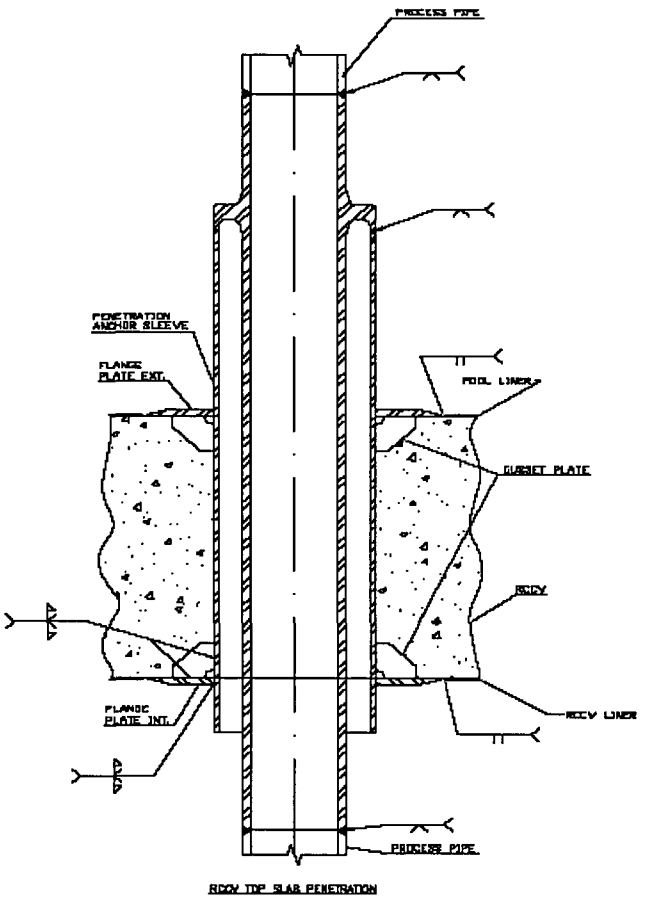

Figure 3.8-7. RCCV Top Slab Penetration

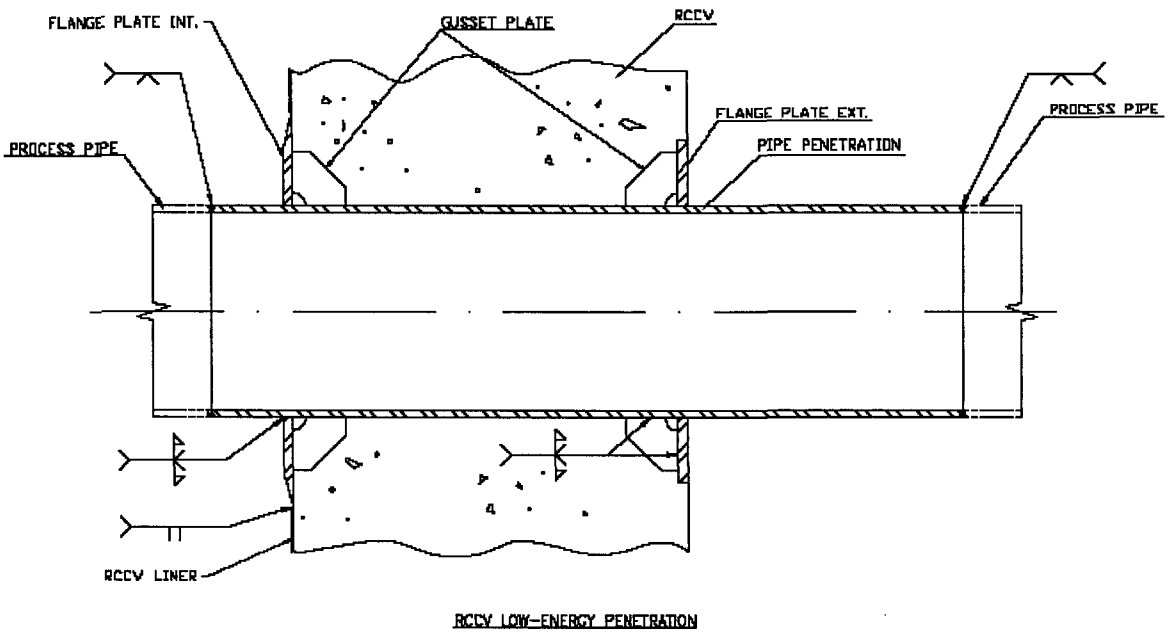

Figure 3.8-8. RCCV Low-Energy Penetration

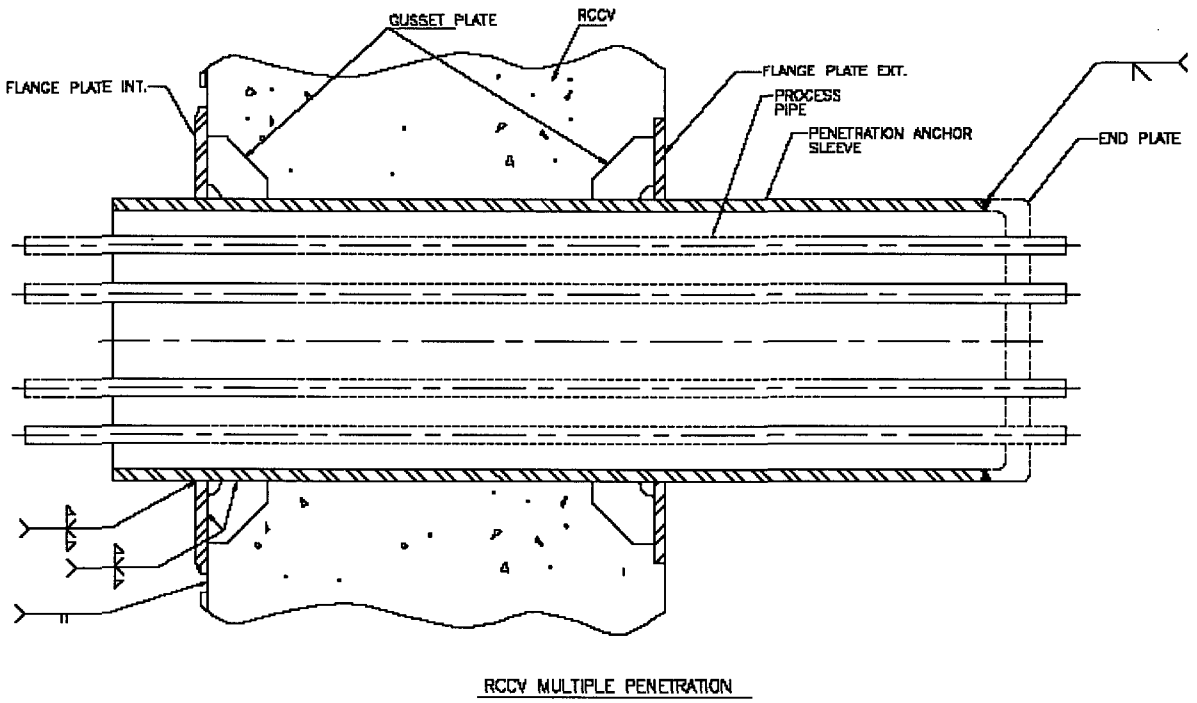

Figure 3.8-9. RCCV Multiple Penetration

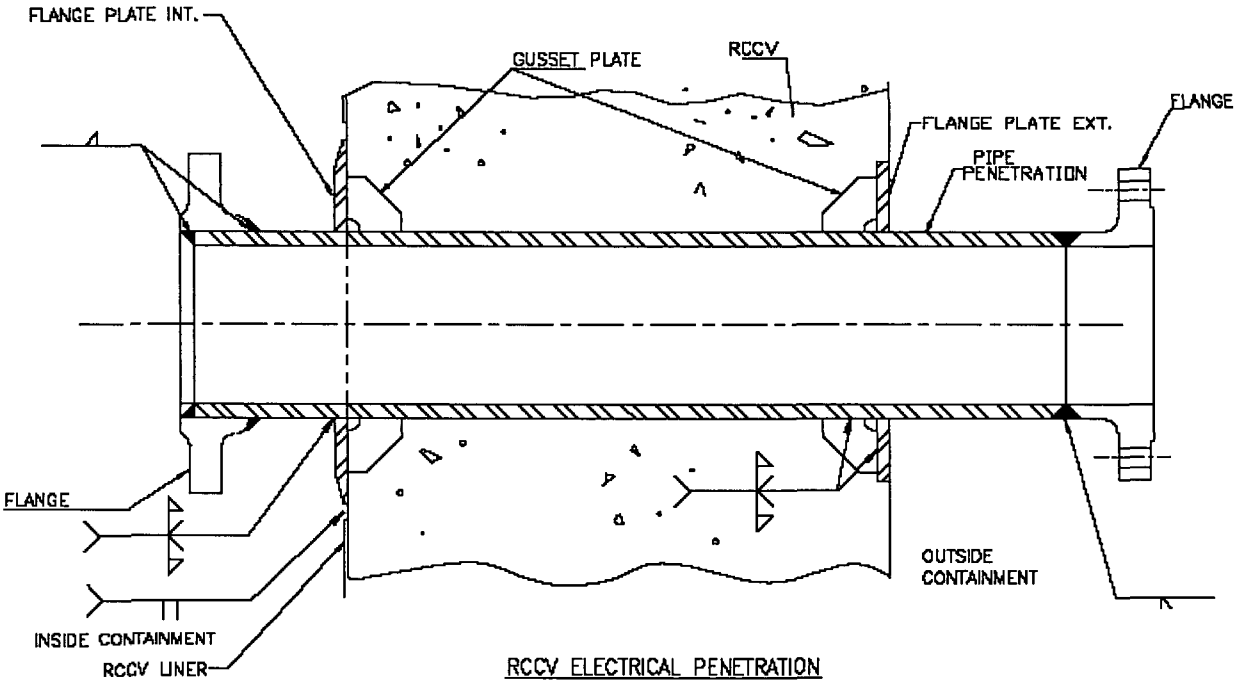

Figure 3.8-10. RCCV Electrical Penetration

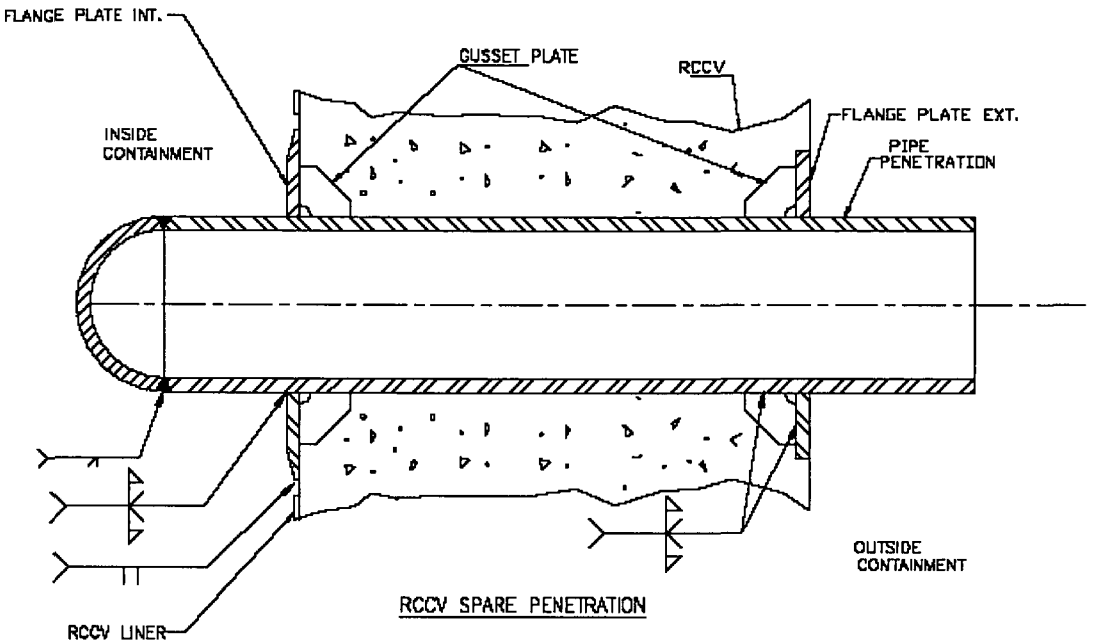

Figure 3.8-11. RCCV Spare Penetration

thicknesses and rebar ratios used in the evaluation. At each section, in general, three elements are analyzed at azimuth 0°, 90° and 135°.

Tables 3G.1-28 through 3G.1-32 show the rebar and concrete stresses at these sections for the representative elements. Tables 3G.1-33 and 3G.1-34 summarize evaluation results for transverse shear and tangential shear in accordance with ASME Section III, Division 2, Article CC-3520.

Table 3G.1-35 shows the maximum strains of containment liner plate. Table 3G.1-36 shows the stress summary of drywell head.

3G.1.5.4.1.1 Containment Wall Including RPV Pedestal

Sections 1 through 9 shown in Figure 3G.1-28 are considered critical sections for the containment wall including the RPV pedestal. Maximum stress in the meridional rebar is found to be 292.5 MPa at Section 4 near the bottom of the RCCV Wetwell due to load combination CV-11a, as shown in Table 3G.1-31. The maximum stress in the circumferential rebar is found to be 363.0 MPa, which occurs also at Section 4, the bottom of the RCCV Wetwell due to load combination CV-11a, as shown in Table 3G.1-31. The maximum concrete stress is found to be 22.1 MPa, which occurs at Section 6 due to load combination CV-11a.

The maximum transverse shear stress is found to be 3.88 MPa at Section 1 for the load combination CV-11b. The amounts of shear ties provided satisfy the required values at all sections, as indicated in Table 3G.1-33.

As for tangential shear, the maximum stress of 4.18 MPa is found at Section 4, the bottom of the Wetwell, due to the combination CV-11b. The value is less than the allowable tangential shear stress provided by orthogonal reinforcement, which is described in Table 3.8-3. The amounts of reinforcement provided satisfy the required values at all sections, as indicated in Table 3G.1-34.

Table 3G.1-35 shows liner plate strains. The liner maximum strain is found to be 0.0040 at Section 6, which is within allowable limits given in Table CC-3720-1, ASME Code Section III, Division 2. The liner stresses during construction are kept within the allowable values found in Table CC-3720-1 of ASME Code Section III, Division 2 by limiting concrete placement pressure to a maximum of 167 kPa for the top slab, 48 kPa for the upper drywell/lower drywell wall and 32 kPa for the wetwell wall.

3G.1.5.4.1.2 Containment Top Slab and Suppression Pool Slab

Sections 12 through 17 are examined for the Containment Top Slab and Suppression Pool Slab. The locations of these sections are shown in Figure 3G.1-28. The maximum rebar stresses are found to be 256.0 MPa at Section 16 due to the load combination CV-11b in the Top Slab, and 264.0 MPa at Section 13 due to the combination CV-7a in the Suppression Pool Slab. The maximum concrete stresses are 10.6 MPa and 20.4 MPa in the Top Slab and the Suppression Pool Slab, respectively.

The maximum transverse shear stresses are found to be 0.93 MPa at Section 17 for the load combination CV-7b in the Top Slab, and 4.22 MPa at Section 12 for the combination CV-11a in the Suppression Pool Slab. The amounts of shear ties provided satisfy the required values at all sections, as indicated in Table 3G.1-33.

3G.2 CONTROL BUILDING

3G.2.1 Objective and Scope

The objective of this subsection is to document the structural design details, inputs and analytical results from the analysis the Control Building (CB) of the standard ESBWR plant. The scope includes the design and analysis of the structure for normal, severe environmental, extreme environmental, and construction loads.

3G.2.2 Conclusions

The following are the major summary conclusions on the design and analysis of the CB.

- Based on the results of finite element analyses performed in accordance with the design conditions identified in Subsection 3G.2.3, stresses in concrete and reinforcement are less than the allowable stresses per the applicable regulations, codes or standards listed in Section 3.8.
- The factors of safety against floatation, sliding, and overturning of the structure under various loading combinations are higher than the required minimum.
- The thickness of the roof slabs and exterior walls are more than the minimum required to preclude penetration, perforation or spalling resulting from impact of design basis tornado missiles.

3G.2.3 Structural Description

The CB houses the essential electrical, control and instrumentation equipment, the control room for the Reactor and Turbine Buildings, and the CB HVAC equipment. The CB is a Seismic Category I structure that houses control equipment and operation personnel.

The CB is a reinforced concrete box type shear wall structure consisting of walls and slabs and is supported by a foundation mat. Steel framing is composite with concrete slab and used to support the slabs for vertical loads. The CB is a shear wall structure designed to accommodate all seismic loads with its walls and the connected floors. Therefore, frame members such as beams or columns are designed to accommodate deformations of the walls in case of earthquake conditions. The CB is adjacent to but structurally independent of the Reactor Building (see Figures 1.2-2 through 1.2-5 and Figure 1.2-11).

The key dimensions of the CB are summarized in Table 3.8-8. Figures 3G.2-1 through 3G.2-3 show the outline drawings of the CB.

3G.2.4 Analytical Models

3G.2.4.1 Structural Model

The CB is analyzed utilizing the finite element computer program NASTRAN. The finite element model consists of quadrilateral and beam elements. The quadrilateral elements are used to represent the slabs and walls. Beam elements are used to represent columns and beams. The model is shown in Figures 3G.2-4 to 3G.2-9. The model includes the whole (360°) portion of the CB taking the application of nonaxisymmetrical loads into consideration.

3G.2.5.5 Foundation Stability

The stabilities of the CB foundation against overturning, sliding and floatation are evaluated. The energy approach is used in calculating the factor of safety against overturning.

The factors of safety against overturning, sliding and floatation are given in Table 3G.2-23. All of these meet the acceptance criteria given in Table 3.8-14.

Maximum soil bearing stress is found to be 256 kPa due to dead plus live loads. Maximum bearing stresses for load combinations involving SSE are shown in Table 3G.2-24 for various site conditions.

3G.2.5.6 Tornado Missile Evaluation

The CB is shown in Figure 3G.2-3. The minimum thickness required to prevent penetration and concrete spalling is evaluated. The methods and procedures are shown in Section 3.5.3.1.1.

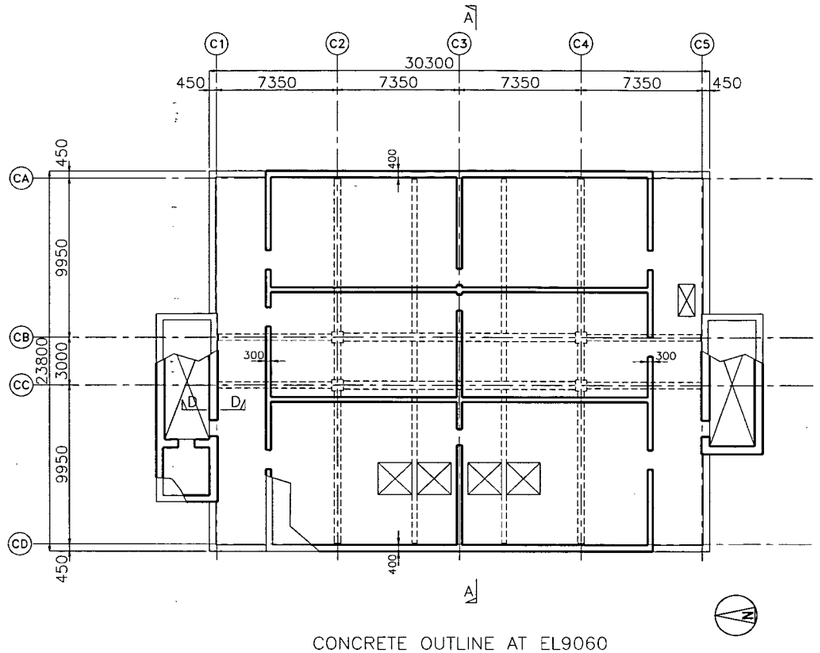

CONCRETE OUTLINE AT EL9060

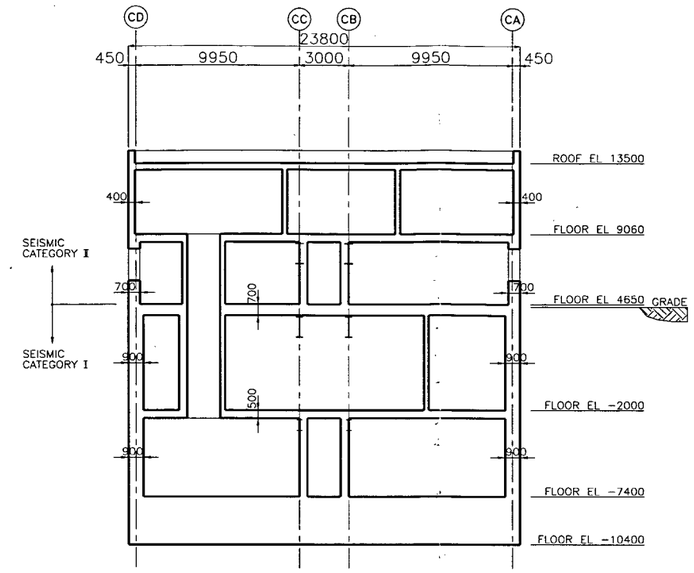

CONCRETE OUTLINE A-A SECTION

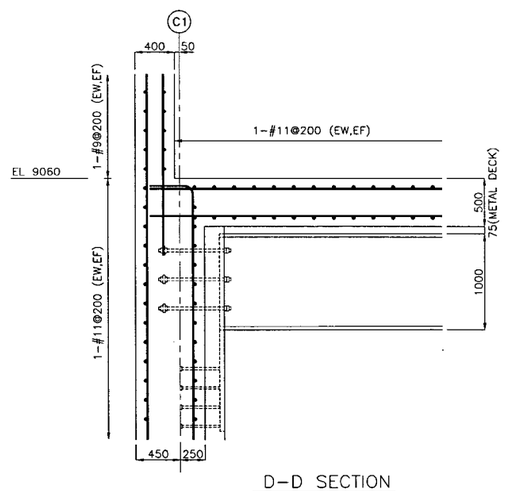

D-D SECTION

* SHEAR STUDS SHALL BE WELDED TO TOP FLG PL.

Figure 3G.2-3. CB Concrete Outline Plan at EL 9060, Section and Section Detail

high point of the pool circulation lines to preclude a pipe break from siphoning the water from the pool and jeopardizing the safe water level.

The racks include individual solid tube storage compartments, which provide lateral restraints over the entire length of the fuel assembly or bundle. The weight of the fuel assembly or bundle is supported axially by the rack fuel support. Lead-in guides at the top of the storage spaces provide guidance of the fuel during insertion.

Materials used for construction are specified in accordance with the latest issue of applicable ASTM specifications. The racks are constructed in accordance with a quality assurance program that ensures the design, construction, and testing requirements are met.

The structural integrity of the rack is demonstrated for the loads and load combinations described below using linear elastic design methods.

The applied loads to the rack are as follows:

- Dead loads-weight of rack and fuel assemblies plus the hydrostatic loads
- Live loads—effect of lifting an empty rack during installation
- Thermal loads—effects caused by pool temperature changes occurring as a result of normal operating or abnormal conditions, as applicable.
- Seismic loads
- Fuel drop load-effect of an accidental drop of the heaviest fuel assembly or bundle from the maximum possible height
- Stuck fuel load-upward force on the rack caused by a postulated stuck fuel assembly

The load combinations considered in the rack design are as follows:

- Dead plus live loads
- Dead plus live plus thermal loads
- Dead plus live plus thermal plus stuck fuel loads
- Dead plus live plus thermal plus seismic loads
- Dead plus live plus fuel drop loads

Stress analyses are performed by classical methods based upon shears and moments developed by the dynamic method. Using the given loads, load conditions and analytical methods, stresses are calculated at critical sections of the rack and compared to acceptance criteria referenced in ASME Code Section III, Subsection NF. In addition, the design of the spent fuel storage racks and associated support structures meet the requirements of Appendix D to SRP 3.8.4.

9.1.2.5 Thermal-Hydraulic Design

During normal operation the fuel storage racks are designed to provide sufficient natural convection coolant flow through the rack and fuel to remove decay heat without reaching excessive water temperatures (100°C; 212°F).