GE Energy

James C. Kinsey
Project Manager, ESBWR Licensing

PO Box 780 M/C J-70
Wilmington, NC 28402-0780
USA

T 910 675 5057
F 910 362 5057
jim.kinsey@ge.com

MFN 06-191
Supplement 3

Docket No. 52-010

January 24, 2007

U.S. Nuclear Regulatory Commission
Document Control Desk
Washington, D.C. 20555-0001

Subject: **Response to Portion of RAI Letter No. 38 Related to ESBWR Design Certification Application - Seismic Category I Structures – RAI Numbers 3.8-3 S03, 3.8-6 S02, 3.8-13 S03, 3.8-14 S02, 3.8-18 S02, 3.8-20 S01, 3.8-25 S03, 3.8-26 S01, 3.8-27 S02, 3.8-41 S03, 3.8-46 S02, 3.8-48 S03, 3.8-51 S03, 3.8-56 S01, 3.8-64 S03, 3.8-87 S02, 3.8-90 S02, 3.8-91 S03 & 3.8-100 S02- Supplement 3**

Enclosure 1 contains supplemental responses to the subject NRC RAIs resulting from the December 2006 Seismic Follow-up audit. Previous Letter No. 38 RAI responses were submitted in References 1 through 3.

If you have any questions or require additional information regarding the information provided here, please contact me.

Sincerely,

Kathy Sedney for

James C. Kinsey
Project Manager, ESBWR Licensing

D068

Enclosure:

1. MFN 06-191, Supplement 3 - Response to Portion of RAI Letter No. 38 Related to ESBWR Design Certification Application - Seismic Category I Structures – RAI Numbers 3.8-3 S03, 3.8-6 S02, 3.8-13 S03, 3.8-14 S02, 3.8-18 S02, 3.8-20 S01, 3.8-25 S03, 3.8-26 S01, 3.8-27 S02, 3.8-41 S03, 3.8-46 S02, 3.8-48 S03, 3.8-51 S03, 3.8-56 S01, 3.8-64 S03, 3.8-87 S02, 3.8-90 S02, 3.8-91 S03 & 3.8-100 S02- Supplement 3

References:

1. MFN 06-191, Letter from David H. Hinds to U. S. Nuclear Regulatory Commission, *Response to Portion of NRC Request for Additional Information Letter No. 38 Related to ESBWR Design Certification Application – Structural Analysis - RAI Numbers 3.8-3, 3.8-6, 3.8-13, 3.8-14, 3.8-18, 3.8-19, 3.8-20, 3.8-23, 3.8-25, 3.8-26, 3.8-27, 3.8-40, 3.8-41, 3.8-46, 3.8-47, 3.8-48, 3.8-49, 3.8-51, 3.8-56, 3.8-63, 3.8-64, 3.8-82, 3.8-83, 3.8-87, 3.8-90, 3.8-91, 3.8-100, 3.8-104, 3.8-105 and 3.8-106,* June 28, 2006
2. MFN 06-191, Supplement 1, Letter from David H. Hinds to U. S. Nuclear Regulatory Commission, *Response to Portion of NRC Request for Additional Information Letter No. 38 Related to ESBWR Design Certification Application – Structural Analysis - RAI Numbers 3.8-3, 3.8-6, 3.8-13, 3.8-14, 3.8-18, 3.8-25, 3.8-27, 3.8-46, 3.8-48, 3.8-63, 3.8-64, 3.8-82, 3.8-87, 3.8-90, 3.8-91, 3.8-100, 3.8-104, and 3.8-106* - Supplement 1, September 14, 2006
3. MFN 06-191, Supplement 2, Letter from David H. Hinds to U. S. Nuclear Regulatory Commission, *Response to Portion of RAI Letter No. 38 Related to ESBWR Design Certification Application - Seismic Category I Structures – RAI Numbers 3.8-3, 3.8-13, 3.8-25, 3.8-41, 3.8-48, 3.8-51, 3.8-64, and 3.8-91*- Supplement 2, November 7, 2006

cc: AE Cubbage USNRC (with enclosures)
GB Stramback GE/San Jose (with enclosures)
eDRF 0000-0062-7972

ENCLOSURE 1

MFN 06-191, SUPPLEMENT 3

Response to Portion of RAI Letter No. 38

Related to ESBWR Design Certification Application

Seismic Category I Structures

RAI Numbers 3.8-3 S03, 3.8-6 S02, 3.8-13 S03, 3.8-14 S02, 3.8-18 S02, 3.8-20 S01, 3.8-25 S03, 3.8-26 S01, 3.8-27 S02, 3.8-41 S03, 3.8-46 S02, 3.8-48 S03, 3.8-51 S03, 3.8-56 S01, 3.8-64 S03, 3.8-87 S02, 3.8-90 S02, 3.8-91 S03 & 3.8-100 S02- Supplement 3

Original Response, Supplement 1 and Supplement 2 previously submitted under MFNs 06-191, 06-191S1 and 06-191S2 without DCD updates are included to provide historical continuity during review.

NRC RAI 3.8-3

Provide additional information (description, plans, and sections) for the following structural elements. These include the reinforcement details around major reinforced concrete containment vessel (RCCV) piping penetrations, equipment hatches, and personnel airlocks; structural attachments to the containment internal wall (such as pipe restraints); containment external supports if any, attached to the wall to support external structures/elements; reactor pressure vessel (RPV) stabilizer (referred to in App. 3G.1.3.1.4); reactor building (RB) floor slabs made of composite sections (referred to in App. 3G.1.3.1.1); roof trusses and their supporting columns (referred to in App. 3G.1.3.1.1); and the basaltic concrete at the bottom of the containment. In addition, to facilitate the review, Figure 3.8-1 should be improved to identify a number of elements in the ESBWR containment structure which are not shown. These elements include: the shield wall, RPV stabilizer, RPV skirt, RPV insulation, equipment hatches, wetwell hatch, personnel airlocks, refueling seal, major equipment platforms, quenchers, representative vent pipe and safety relief valve (SRV) downcomer pipe with sleeve (from the drywell into the suppression pool).

GE Response

A global structural analysis has been completed in the ESBWR DCD. The purpose of the global analysis is to prove that there are no safety issues unresolved. GE believes that sufficient level of civil-structural detail has been provided in the DCD for plant certification. The construction level design details requested are not available at this stage.

The detail structural design is intimately connected among several disciplines and depends on them for final resolution, such as piping analysis results, equipment sizes, layout and routing of commodities such as cable trays, ducts, etc. It is an iterative process between disciplines.

Among the various structural elements identified in this RAI, GE will provide to the NRC the details of reinforcement around MS/FW penetrations and a representative hatch through the RCCV, which will be included in the response to RAI 3.8-17 in the release on Oct. 31, 2006. They represent an example of the detail structural design. DCD Figure 3.8-1 is intended to depict only the containment boundary. Other items can be found in the following figures.

a. Shield wall. See DCD Figure 3G.1-58.
b. RPV Stabilizers. See DCD Figure 5.3-3.
c. RPV skirt (it is termed sliding support in the ESBWR DCD). See DCD Figure 5.3-3.
d. RPV insulation. Detailed design phase.
e. Equipment hatches. See DCD Figure 3G.1-52.
f. Wetwell hatch. See DCD Figure 3G.1-53.
g. Personnel airlocks. See DCD Figure 3G.1-54.
h. Refueling seal. See DCD Figure 5.3-3.
i. Major equipment platforms. Detailed design phase.

j. Quenchers. See DCD Figure 6.2-1.

k. Representative vent pipe and safety relief value (SRV) downcomer pipe with sleeve (from the drywell into the suppression pool). See DCD Figure 3G.1-57.

No DCD change was made in response to this RAI.

NRC RAI 3.8-3, Supplement 1

Additional topics discussed at audit

a) *Describe embedded plates to support steel members inside containment and show sketch of interaction with liner plate.*

b) *Describe embedded plate support steel members (from pipe whip restraints; piping supports; etc) outside containment and show sketches with anchors into concrete containment.*

c) *Describe diaphragm connection to containment and reference DCD figures as appropriate. Indicate whether fixed ended or simply supported and type of weld to be used (FP;FW; etc)*

d) *Provide description and sketch of a typical embedded plate outside containment that supports commodity items like ducts, trays, conduits, etc.*

GE Response

a) Regarding steel members such as structural steel shapes, piping supports or commodity supports inside containment, Figure 3.8-3 (1) below shows a typical support plate with anchors embedded in the concrete containment. The dimensions of the plate and the number of anchors depend on the loads for each support. They are designed in accordance with ANSI/AISC N690 and ACI 349 Appendix B.

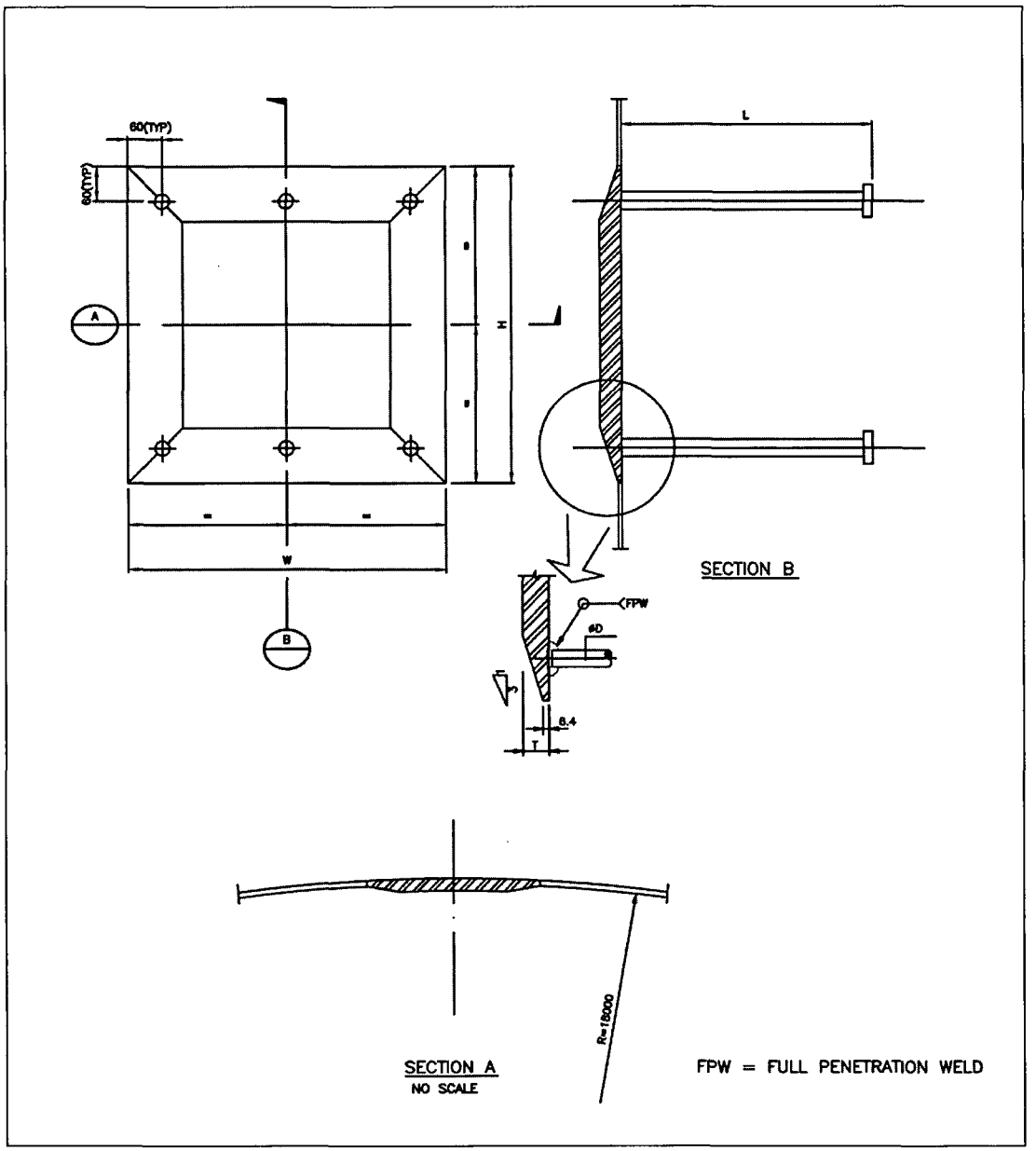

Figure 3.8-3 (1)

b) Regarding other steel members such as structural steel shapes, pipe whip restraints, piping supports, etc, outside the containment, Figure 3.8-3 (2) presents a typical support plate with anchors embedded in the concrete containment. See also response to a) above.

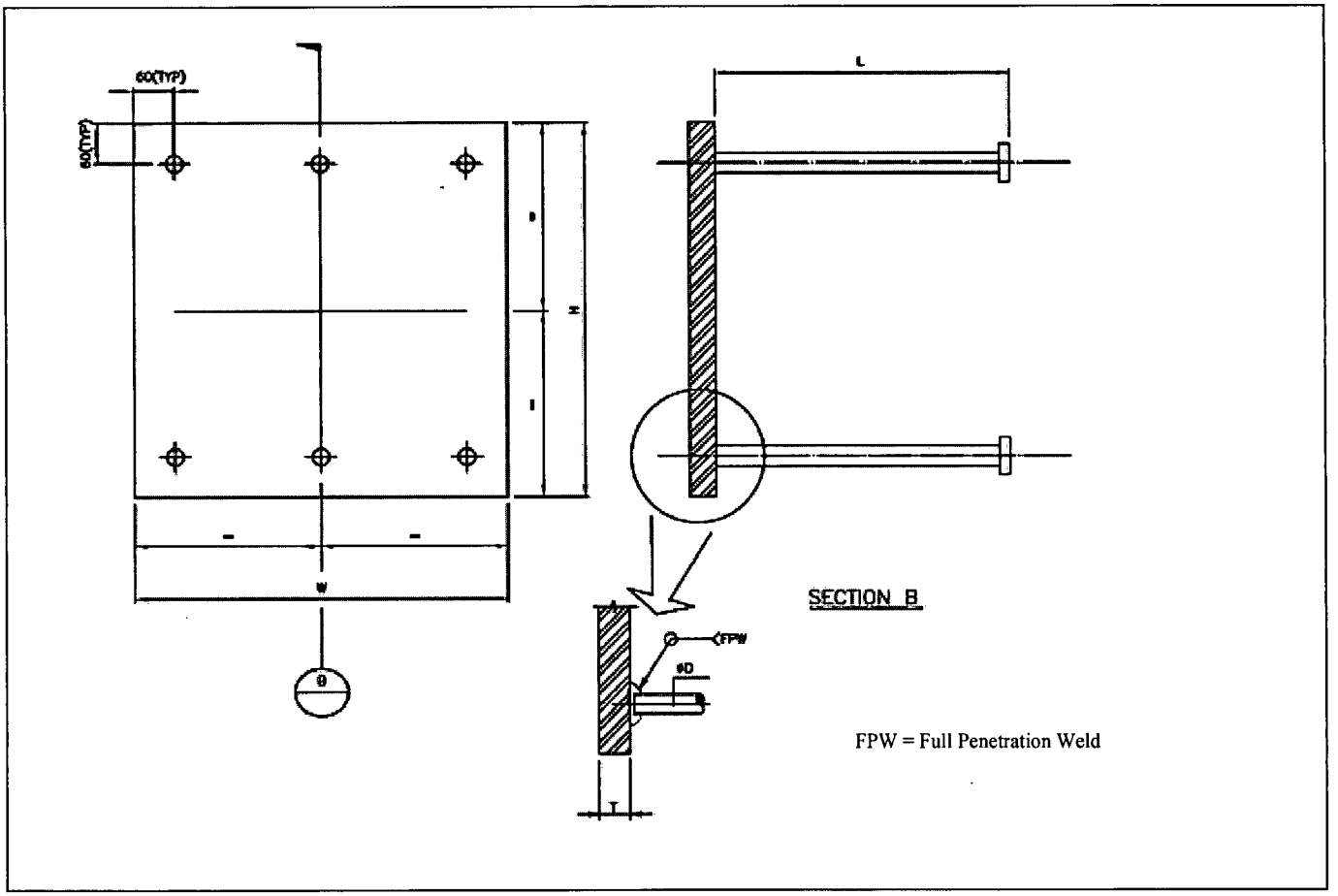

Figure 3.8-3 (2)

c) The top plate, bottom plate and support beam of diaphragm floor are welded to thickened RCCV liner plate, therefore this end is fixed. The reference drawings are Figures 3G.1-55 and –56 of DCD Appendix 3G. Type of weld will be decided in detail design, however, it is expected that the full penetration weld or the partial penetration with fillet weld may be applied to ensure the required strength.

d) The same type of support shown in Figure 3.8-3 (2) above is applicable in these cases. The design is based on ANSI/AISC N690 for the steel plates and ACI 349 Appendix B for the embedded anchors.

No DCD change was made in response to this RAI.

NRC RAI 3.8-3, Supplement 2

GE Additional Post Audit Action

a. Provide conceptual design detail of RPV stabilizer.

b. Provide conceptual design detail of Refueling Seal.

GE Response

a. See RAI 3.7-27, Supplement 1.

b. See Fig. 3.8-3 (3) for conceptual design details of the Refueling Seal.

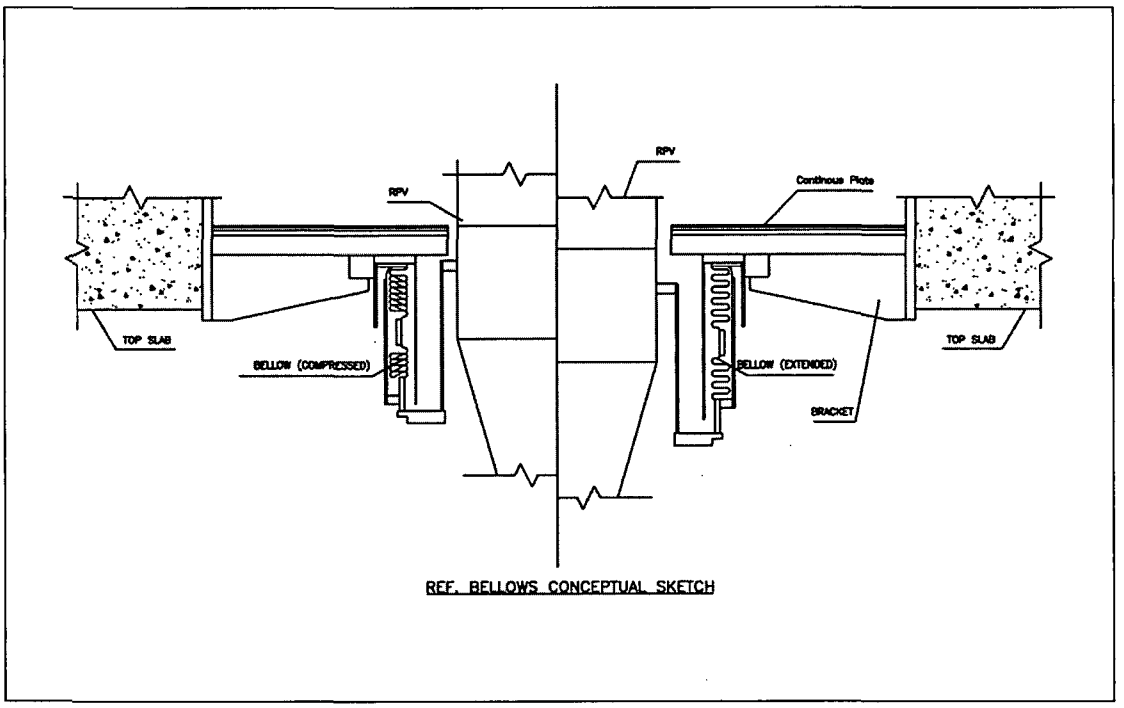

Figure 3.8-3 (3) - Refueling seal: Comparison of compressed and extended bellows.

No DCD change was made in response to this RAI.

NRC RAI 3.8-3, Supplement 3

NRC Assessment Following the December 14, 2006 Audit

Include the description and sketches/details provided with the RAI response in the DCD.

GE Response

Descriptions and sketch details of representative containment structural components are provided in the Supplements 1 and 2 will be updated in the next Revision to the DCD Tier 2.

To provide a leak resistant refueling seal, a structural seal plate with an attached compressible-bellows sealing mechanism between the Reactor Vessel and Upper Drywell opening is utilized. The Refueling Seal depiction provided in NRC RAI 3.8-3, Supplement 2, Figure 3.8-3 (3), can be described as a continuous gusseted radial plate that is anchored to the Drywell opening in the Top floor slab. The radial plate surrounds the RPV with a radial gap opening to allow for thermal radial expansion of the RPV. A circumferential radial bracket from the RPV connects to a circumferential bellows that is also connected to the underside of the Drywell opening plate, thus providing a refueling seal, and allowing for axial thermal expansion of the RPV.

Refer to the response to NRC RAI 3.8-27, Supplement 1 for a description of the RPV Stabilizer.

DCD Impact

DCD Tier 2 Sections 3.8.1.1.1, 3.8.1.1.2, and 3.8.2.1.4 will be revised and Figures 3.8-2, 3.8-3, and 3.8-4 will be added in the next update as noted in the attached markups.

NRC RAI 3.8-6

The description of live load used inside containment given in DCD Section 3.8.1.3.1 needs to be expanded, similar to the description presented in Section 3.8.4.3.1.1, if applicable. The description should cover the types of loads included in live loads (e.g., floor area live loads, laydown loads, equipment handling loads), situations where floor area live loads are omitted, and the magnitude of live load that is used for inertia effects caused by seismic and hydrodynamic loadings in the overall building model and in the design of individual local members. If a fraction of the live load is utilized for seismic and hydrodynamic effects, then provide justification for the reduced live load magnitude.

GE Response

Live load for structures inside the containment is 9.6 kPa (200 psf) during outages and laydown operations. The loads are applied to the containment interior floors, except the suppression pool floor slab. During normal operation, the live load is not considered since the containment is inerted and therefore inaccessible. The overall building dynamic analysis model for seismic loads reflects the normal operation conditions and, hence, does not include the live load inertia effects of containment internal structures. In the dynamic analysis model for hydrodynamic loads, live load inertia equal to 25% of full live loads was included for containment internal structures and the effect on structural response is negligible. Design of individual members is based on the worst loading conditions, including those that contain live load.

Markups of DCD Tier 2 Section 3.8.1.3.1 were provided in MFN 06-191.

NRC RAI 3.8-6, Supplement 1

Additional topics discussed at audit

Discuss how no live load is assured during normal operation. It is customary to include 25% of the Live Load in the seismic analysis.

GE Response

There is no live load inside the containment during normal operation and administrative controls assume that all equipment used in outages is removed from the containment.

No DCD change was required in response to this RAI Supplement.

NRC RAI 3.8-6, Supplement 2

NRC Assessment Following the December 14, 2006 Audit

GE needs to confirm that the referenced administrative controls are designated as Tier 1 information, because this is critical to ensuring that there is no live load inside containment during normal operation. If this is not the case, then either define this as Tier 1 information, or consider that live load may be present inside containment during normal operation.

During the audit, GE provided data to show that if 25% of the live load was considered, then it would have a negligible effect on the natural frequency of structures inside containment. Also, based on this study, GE will not need to rely on administrative controls to ensure that all live load items will be removed from inside containment during outages. GE needs to submit this information as a supplemental response to this RAI.

GE Response

NRC RAI 3.8-6 Supplement 1 requires the evaluation of the effect of live load on the containment internals. Therefore, the eigenvalue analyses were performed for vent wall, reactor shield wall and diaphragm floor considering 25% of live load (9.6kN/m^2) on the diaphragm floor and platforms of updated seismic model. Live load has no effect on the frequencies of the containment internal structures as shown below:

Structure		Seismic Model (updated)	
		No live load mass	Additional mass for 25% full live load
Vent Wall	Frequency (Hz)	26.8	26.7
	Ratio	-	0.996
Reactor Shield Wall	Frequency (Hz)	14.6	14.4
	Ratio	-	0.986
Diaphragm Floor	Frequency (Hz)	12.7	12.3
	Ratio	-	0.969

Therefore, there is no need to include this item as DCD Tier 1 information nor administrative controls required.

DCD Impact

No DCD change was required in response to this RAI Supplement.

NRC RAI 3.8-13

For the soil springs used in the containment and RB model (DCD Section 3.8.1.4.1.1 and Appendix 3G):

a) Explain why the foundation soil springs for rocking and translation are determined based on soil parameters corresponding to the "Soft Site" conditions for seismic and other loads. Include a discussion of the conservatism of this assumption and the basis for the conclusion.

b) Explain how the soil springs for the non-seismic loads were determined. If the springs are modeled as having perfectly elastic stiffness, then explain why these stiffness values are so much smaller than the seismic soil springs.

In addition, (1) identify the applicable detailed report/calculation (number, title, revision and date, and brief description of content) that will be available for audit by the staff, and (2) reference this report/calculation in the DCD.

GE Response

a) The deformations of buildings are greater for the case of Soft soil than for Hard rock. Therefore, it leads to larger section forces for member design. Hence, the Soft soil condition is used. Note that the enveloped seismic loads of all soil cases as described in DCD Section 3A.9 were conservatively applied to the soft soil condition.

b) The pressures acting on the foundation soil in the vertical direction differ in character between horizontal earthquake loads and other loads. When horizontal earthquake loads are excluded, vertical pressures are produced according to the force in the vertical direction, and the foundation soil resists them by vertical stiffness of the soil springs. For this reason, vertical soil springs, kv_1, can be estimated as follows:

$$kv_1 = Kv/A \qquad (3.8\text{-}13\text{-}1)$$

where,

Kv: stiffness of vertical soil spring (used in seismic response analysis)

A: area of basemat

On the other hand, for the horizontal seismic loads, vertical pressures are produced due to overturning moments, and the foundation soil resists them by its rotational rigidity. So, vertical soil springs, kv_2, under seismic loading conditions can be estimated as follows:

$$kv_2 = Kr/I \qquad (3.8\text{-}13\text{-}2)$$

where,

Kr: stiffness of rotational soil spring (used in seismic response analysis)

I: moment of inertia of basemat bottom surface

The inherent rotational stiffness of the soil is larger than its vertical stiffness as shown in DCD Table 3A.5-1. That is why soil springs are larger in stiffness than that of the non-seismic case.

(1) The applicable detailed report/calculation that will be available for NRC audit is 26A6651, RB Structural Design Report, Revision 1, November 2005, containing the structural design details of the Reactor Building.

(2) Since this information exists as part of GE internal tracking system, it is not necessary to add it to the DCD submittal to the NRC.

No DCD change was made in response to this RAI.

NRC RAI 3.8-13, Supplement 1

Additional topics discussed at audit

a) *The part (a) response needs clarification and possible revision of the DCD to describe/explain how the dynamic stick model results for multiple soil cases were used to develop the statically applied seismic loads used in the NASTRAN model. How was conservatism verified?*

   It was shown that under load combination of DL+LOCA+SSE there is a small uplift on the south side of the mat. This means that the soil springs in this area are in tension, which is not possible. GE needs to re-run this analysis without the soil springs in this area taking uplift and demonstrate that this effect is not significant. Cut end springs to check uplift effects at end of mat for soft and hard soil conditions.

b) *Add note to RAI to indicate that differential settlement criteria accounts for horizontal soil variations under the mat. Indicate more clearly that the envelop of all loads was used for design and soil springs were used for soft soil case.*

GE Response

a) The seismic design load envelops the results obtained from all soil conditions in the seismic response analysis. In NASTRAN analysis the soil springs provided underneath of the basemat are estimated for the soft soil condition. The following sections explains the reason why the soft soil condition has been applied to the NASTRAN model by comparing the deformation and stresses of the basemat in both soft soil and hard soil conditions. In this comparison, pressure and thermal loads are not considered per NRC's request:

1. Basemat design under soft soil and hard rock condition

In order to confirm the appropriateness of the basemat design under "Soft Site" condition, basemat deformations and sectional moments are compared between the soft soil case (Vs=300m/sec) and the hard rock case (Vs=1700m/sec). The load combinations are shown in Table 3.8-13 (1). Seismic loads in North to South direction and South to North direction are considered.

Figure 3.8-13 (1) shows the sectional deformations of the basemat. Figures 3.8-13 (2) and (3) compare the bending moments generated in the basemat. Basemat deformation for the soft soil condition is much larger than that of the hard rock condition. As for bending moments, their magnitudes for the soft soil are larger than those for the hard rock, in general. The higher bending moments at few locations for the hard rock site has no impact on the design since they are much less than the maximum moments of the soft soil site on which rebar sizing is based.

Therefore, the basemat design envelops the worst conditions.

(Note that there is a small uplift on the south side of the basemat under the soft soil condition.)

Table 3.8-13 (2) shows calculation of Soil Springs for the soft soil condition.

Table 3.8-13 (1) Load Combinations

Label		Load		
Soft	Hard	Dead	Seismic(Hor.)	Seismic(Ver.)
SNS	HNS	1.00*DOL	1.0*EQNS	0.40*EQZ
SSN	HSN	1.00*DOL	-1.0*EQNS	0.40*EQZ

Table 3.8-13 (2) Calculation of Soil Springs

Soil Spring in Seismic Model				Basemat Dimension *1 X (m)	Basemat Dimension *1 Y (m)	A *2 (m^2)	I *3 (m^4)	Soil Spring Stiffness k ($t/m/m^2$)	Soil Spring Stiffness k ($MN/m/m^2$)		Note
(RBFB Model)											
X-dir	Khx	(t/m)	2.968E+06	68.0	47.0	3196.0		928.7	**9.107**		Horizontal X-dir.
Y-dir	Khy	(t/m)	3.146E+06	68.0	47.0	3196.0		984.4	**9.654**		Horizontal Y-dir.
Z-dir	Kv	(t/m)	4.453E+06	68.0	47.0	3196.0		1393.3	**13.66**		Vertical (Other Loads)
										Average	
X-X Rotation	Krxx	(t•m/rad)	2.516E+09	68.0	47.0		5.8833E+05	4276.5	41.94	**38.35**	Vertical (Horiz. Seismic Loads)
Y-Y Rotation	Kryy	(t•m/rad)	4.365E+09	68.0	47.0		1.2315E+06	3544.4	34.76		
(CB Model)											
X-dir	Khx	(t/m)	1.349E+06	29.4	22.9	673.3		2003.7	**19.650**		Horizontal X-dir.
Y-dir	Khy	(t/m)	1.399E+06	29.4	22.9	673.3		2077.9	**20.378**		Horizontal Y-dir.
Z-dir	Kv	(t/m)	2.003E+06	29.4	22.9	673.3		2975.1	**29.177**		Vertical (Other Loads)
										Average	
X-X Rotation	Krxx	(t•m/rad)	2.558E+08	29.4	22.9		2.9422E+04	8694.2	85.264	**79.174**	Vertical (Horiz. Seismic Loads)
Y-Y Rotation	Kryy	(t•m/rad)	3.614E+08	29.4	22.9		4.8495E+04	7452.3	73.085		

Note *1: Size of basemat in FE analysis model
Note *2: Area of basemat
Note *3: Moment of inertia of basemat bottom surface

2. Cut off soil springs in tension

There are some soil springs present in Figure 3.8-13 (1) that are in tension for the South to North seismic case. This section evaluates the impact on basemat stresses without these soil springs in tension under the soft soil condition.

An iterative approach was used. Based on the result from the initial analysis, the tension capability is removed in the next iteration for those springs that are in tension. This iterative process is continued until there are no more springs in tension.

Figures 3.8-13 (4) and (5) show the comparison of the sectional deformations of the basemat and the bending moments generated in the basemat respectively at the final step of iteration. In the area close to the RCCV wall, bending moments are higher than that of the DCD design; however the resulting stresses in the concrete and reinforcement are still below the code allowables with large margins as shown in Table 3.8-13 (3).

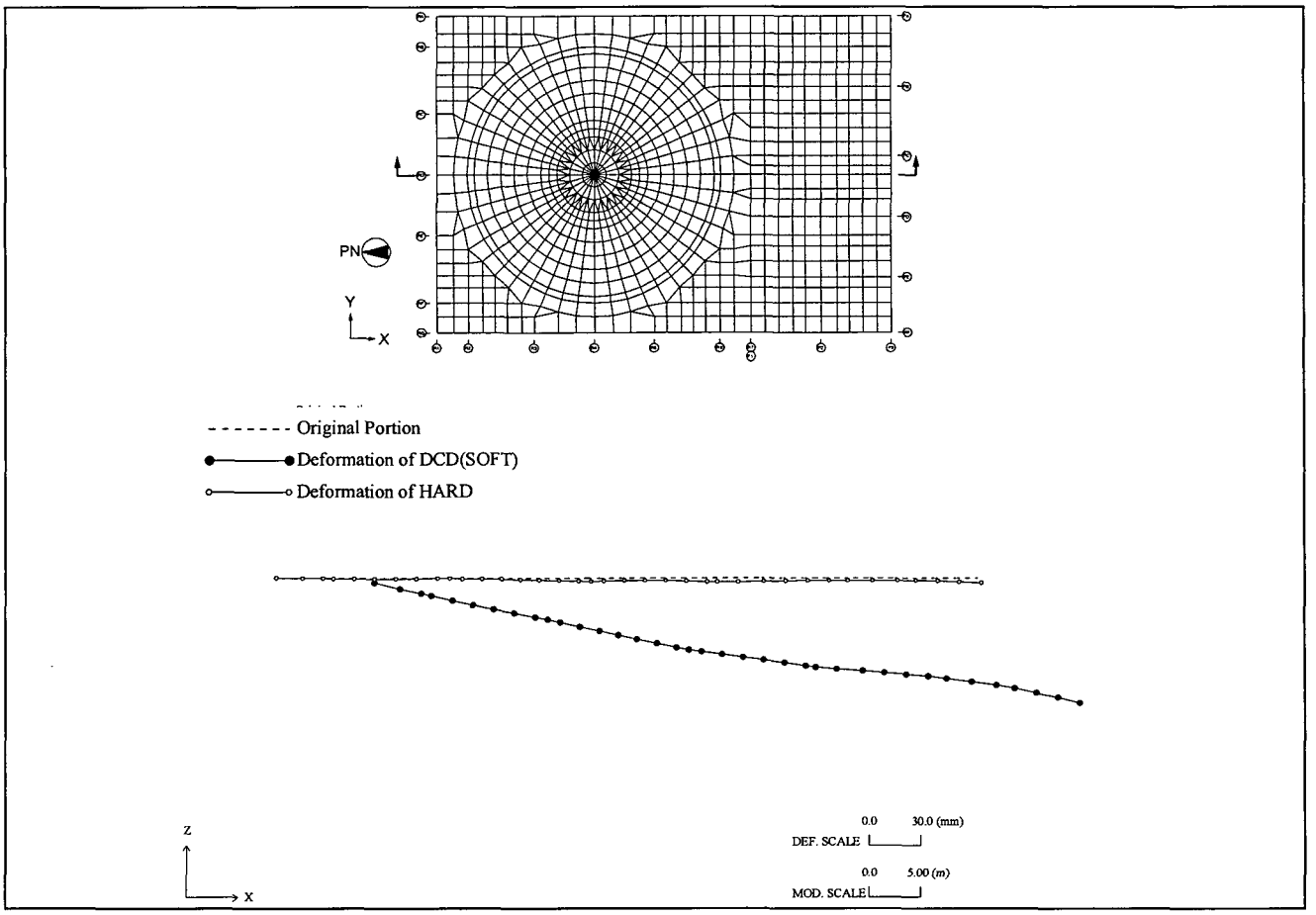

a) North to South

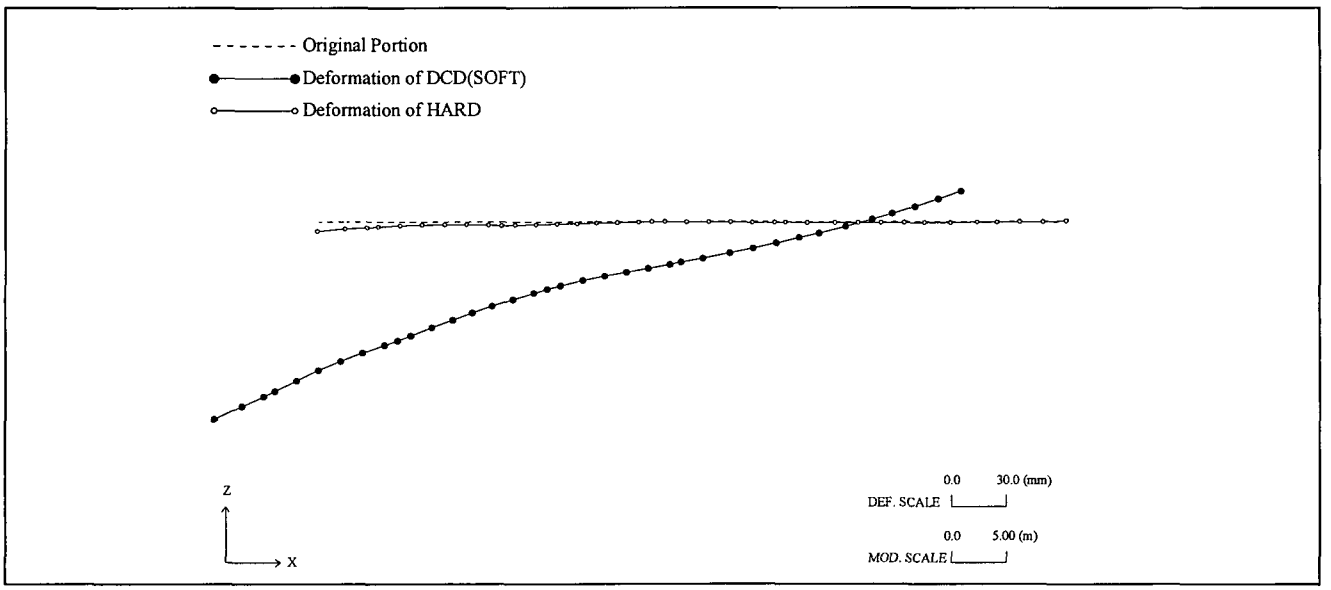

b) South to North

Figure 3.8-13 (1) Comparison of Basemat Deformation for Dead Load

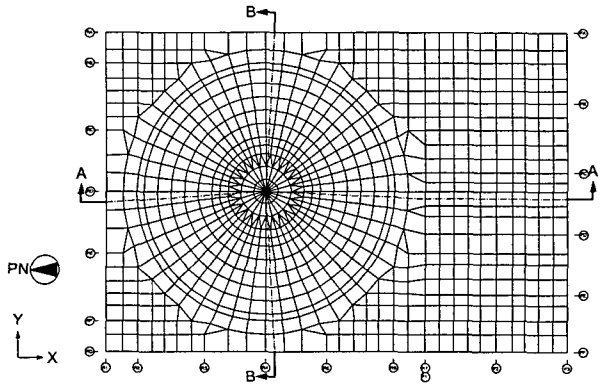

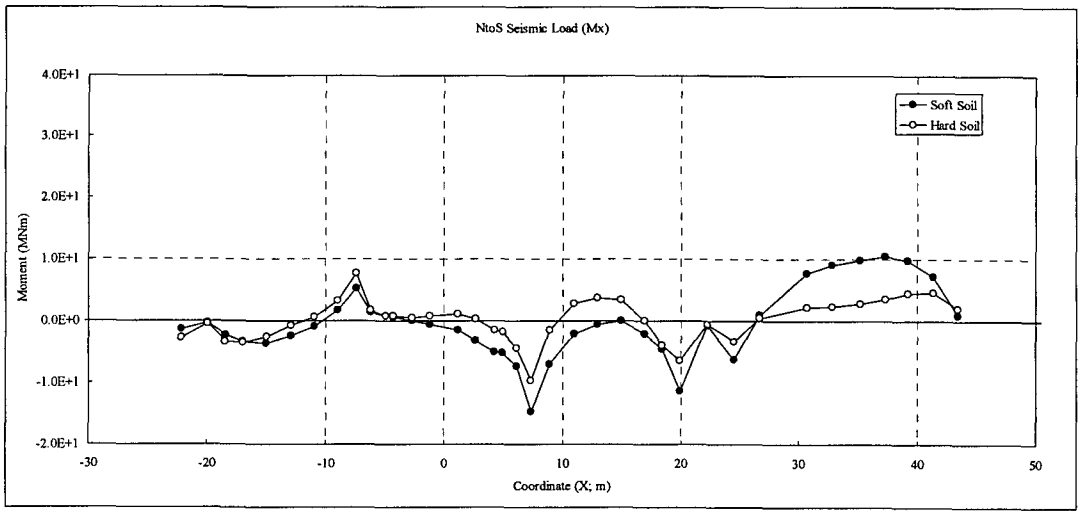

(a) Mx in A-A Section

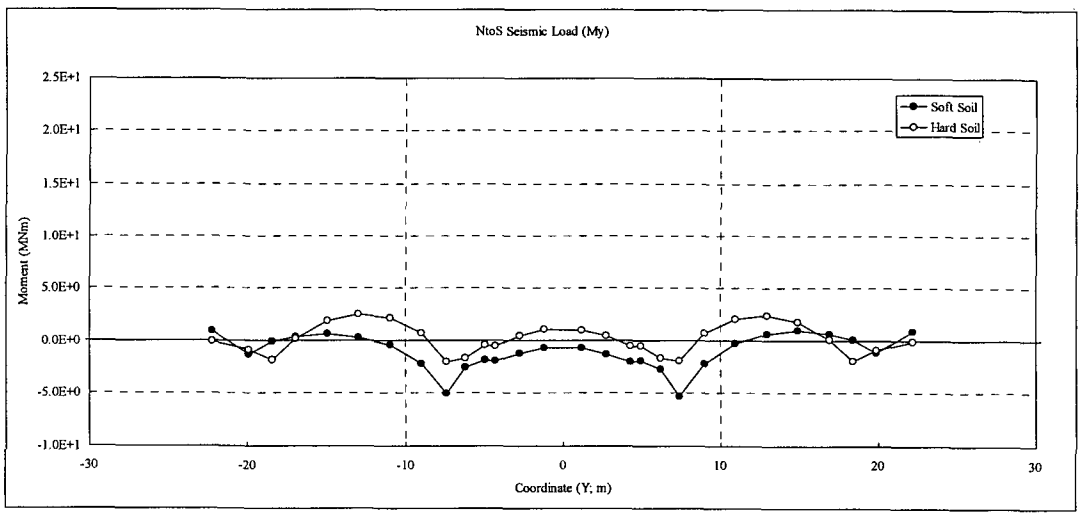

(b) My in B-B Section

Figure 3.8-13 (2) Comparison of Basemat Sectional Moments (N to S)

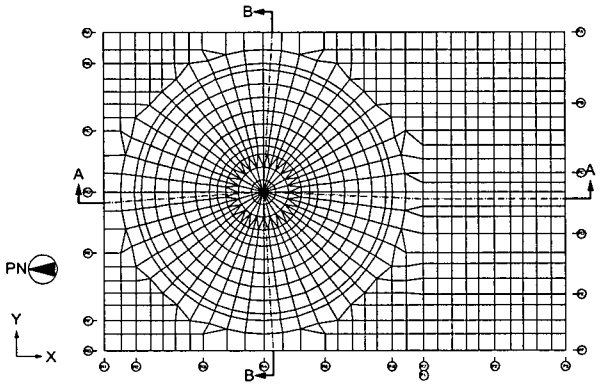

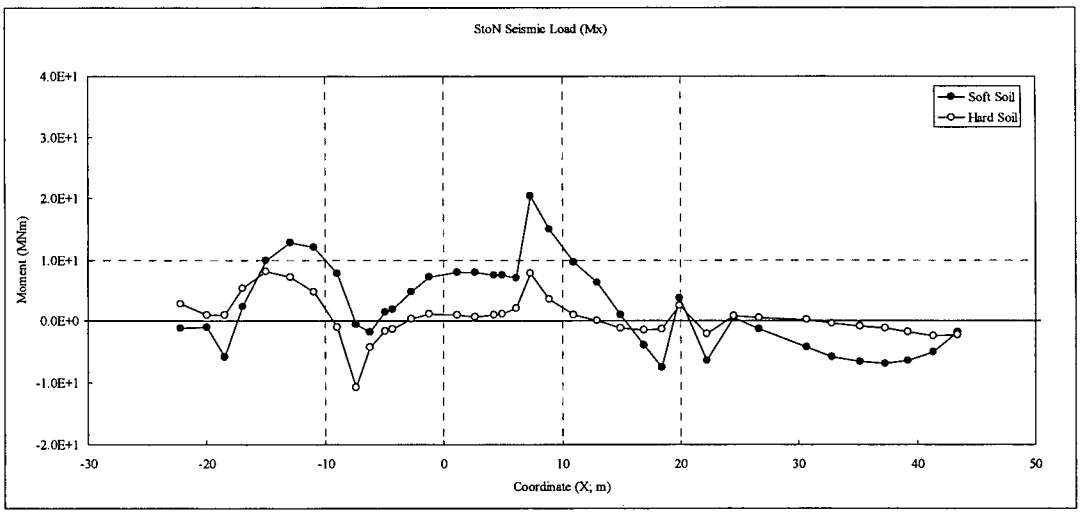

(a) Mx in A-A Section

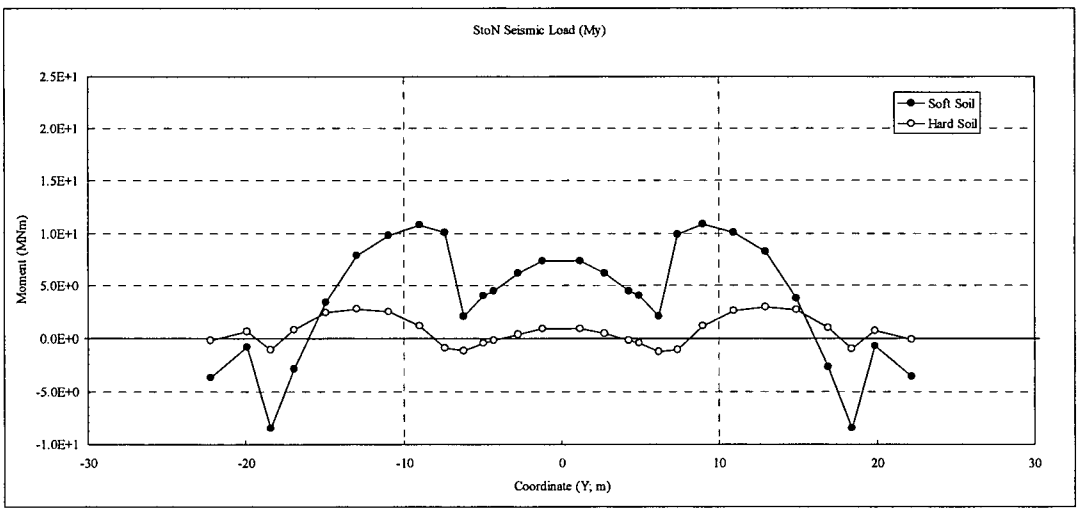

(b) My in B-B Section

Figure 3.8-13 (3) Comparison of Basemat Sectional Moments (S to N)

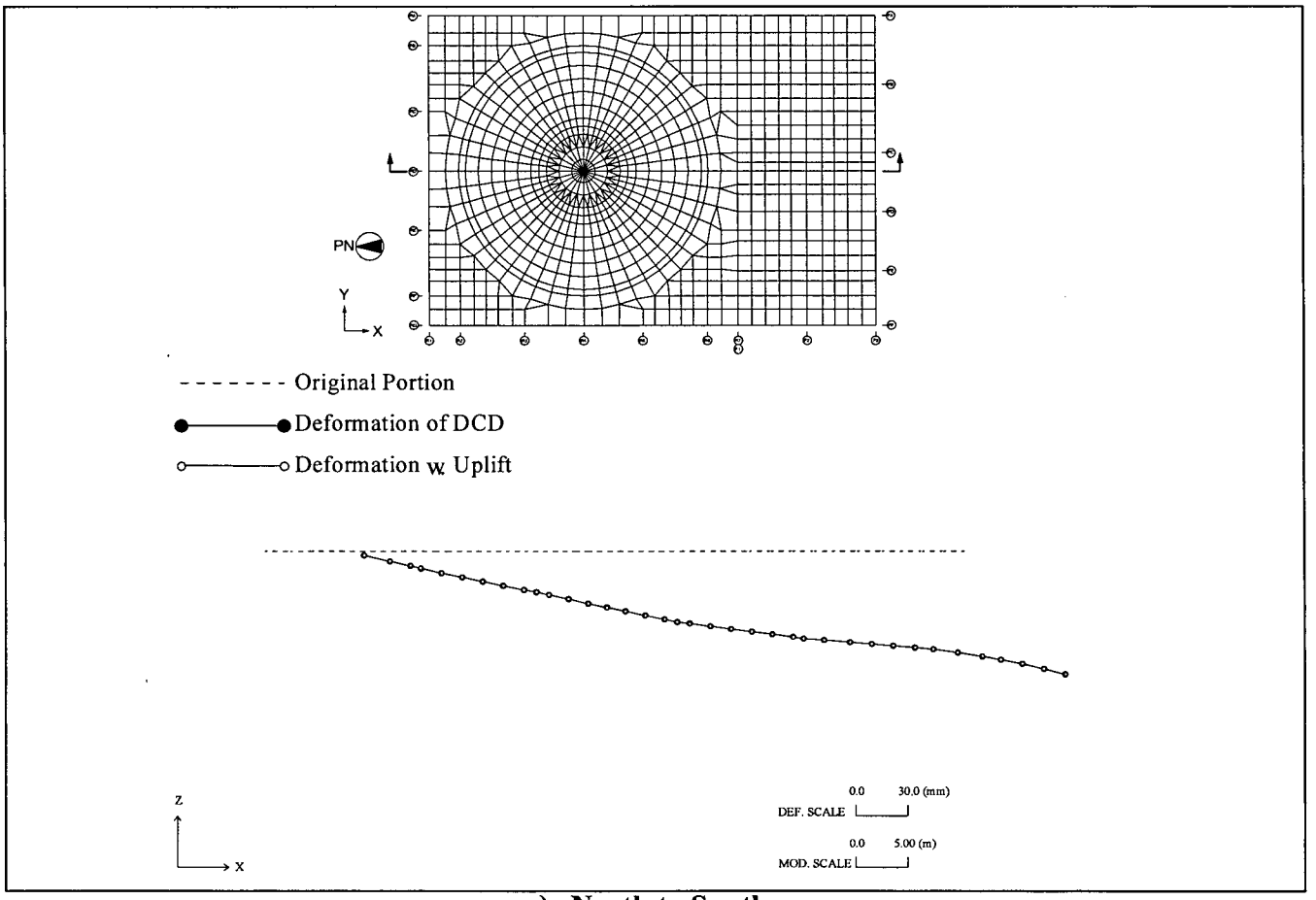

a) North to South

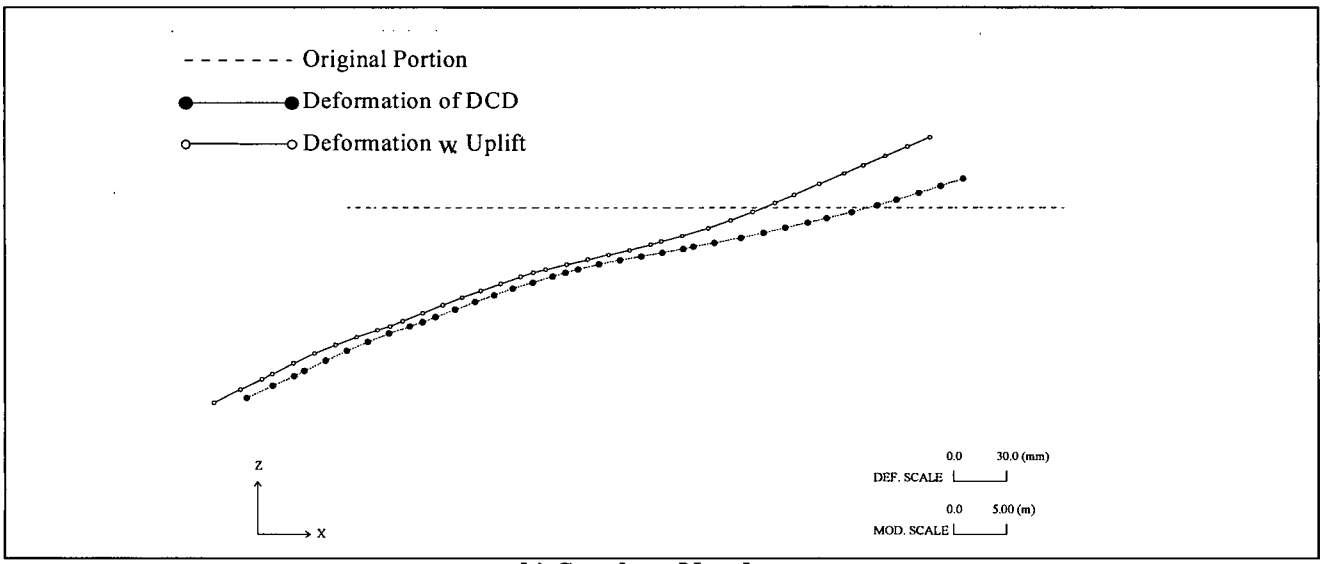

b) South to North

Figure 3.8-13 (4) Comparison of Basemat Deformation without tension springs

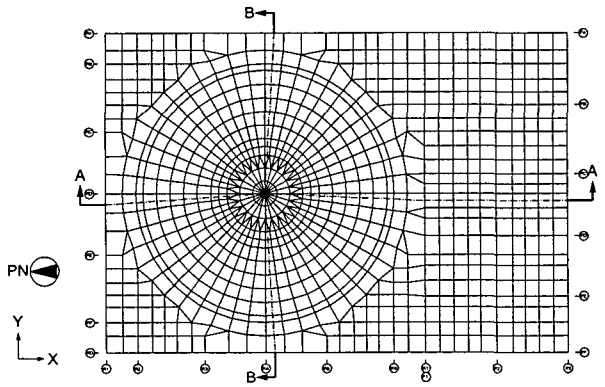

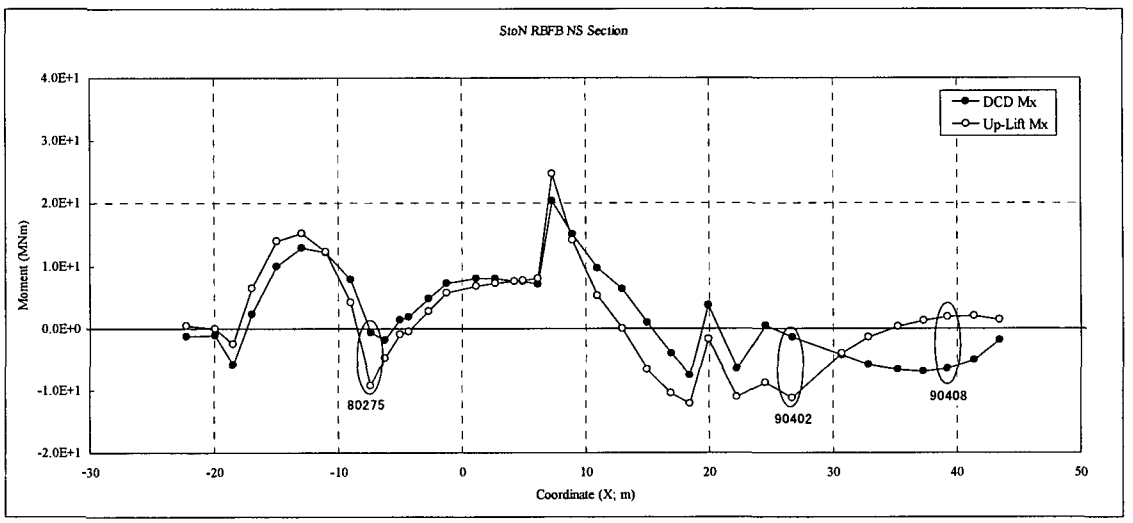

(a) Mx in A-A Section

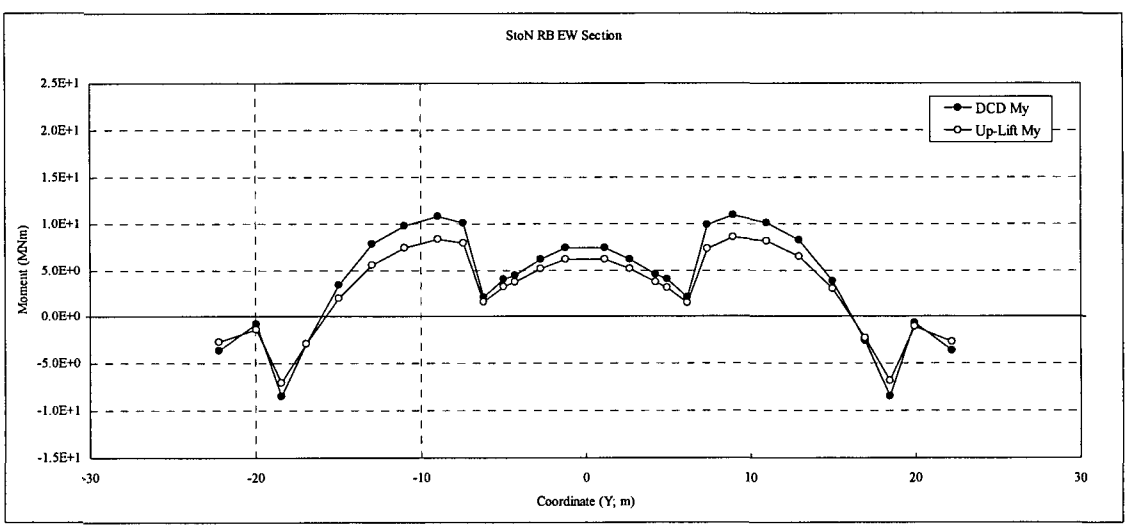

(b) My in B-B Section

Figure 3.8-13 (5) Comparison of Basemat Sectional Moments (S to N)

Table 3.8-13 (3) Concrete and Rebar stresses

[DCD Design]

Seismic Force Direction	Soil Condition	Element ID	Load	Concrete Stress (MPa)		Primary Reinforcement Stress (MPa)				
				Calculated	Allowable	Radial		Circumferential		Allowable
						Top	Bottom	Top	Bottom	
S to N	Soft	80275	SSE+LOCA 6min	-5.3	-23.5	-35.4	-10.9	2.2	4.2	372.2
			SSE+LOCA 72h	-6.4	-23.5	-40.7	-7.6	0.9	8.7	372.2
		90402	SSE+LOCA 6min	-5.9	-23.5	177.7	-10.5	213.8	23.7	372.2
			SSE+LOCA 72h	-6.6	-23.5	187.6	-13.4	220.1	24.2	372.2
		90408	SSE+LOCA 6min	-10.2	-23.5	-51.7	133.2	99.7	116.7	372.2
			SSE+LOCA 72h	-10.7	-23.5	-54.9	137.4	101.4	119.8	372.2

[Cut-off Soil Springs in tension]

Seismic Force Direction	Soil Condition	Element ID	Load	Concrete Stress (MPa)		Primary Reinforcement Stress (MPa)				
				Calculated	Allowable	Radial		Circumferential		Allowable
						Top	Bottom	Top	Bottom	
S to N	Soft	80275	SSE+LOCA 6min	-7.8	-23.5	-45.2	8.6	-7.2	17.2	372.2
			SSE+LOCA 72h	-8.8	-23.5	-49.8	15.4	-8.2	28.1	372.2
		90402	SSE+LOCA 6min	-5.0	-23.5	-27.0	17.7	54.5	42.9	372.2
			SSE+LOCA 72h	-4.0	-23.5	-18.9	10.1	58.3	40.2	372.2
		90408	SSE+LOCA 6min	-3.0	-23.5	19.0	-10.3	51.6	-3.2	372.2
			SSE+LOCA 72h	-3.0	-23.5	17.5	-10.5	51.7	-3.0	372.2

Note: For the locations of elements, see Figure 3.8-13 (5).

b) The discussion about differential settlement criteria will be provided in response to RAI 3.8-92, which is due to the NRC by October 31, 2006. In the NRC audit discussion about the response to RAI 3.8-90 a parametric study was requested to consider the non-uniform soil conditions under the basemat. Because additional analytical work is required for this parametric study, the response to RAI 3.8-94 will address this issue. RAI 3.8-94 is also due to the NRC by October 31, 2006.

No DCD change was made in response to this RAI.

NRC RAI 3.8-13, Supplement 2

GE Additional Post Audit Action

Supplement 1 showed only seismic loading in N-S direction. Provide results for seismic loading in 3 directions.

GE Response

Uplift analyses described here were additionally performed for the following conditions:

EW_uplift = DL + SSE (1.0EW + 0.4V)

WE_uplift = DL + SSE (1.0WE + 0.4V)

Figures 3.8-13 (6), (7) and (8) show the comparison of the sectional deformations of the basemat and bending moments generated in the basemat respectively at the final step of iteration. In the area close to the cylindrical wall below the RCCV wall, bending moments are higher than that of DCD design; however the resulting stresses in the concrete and reinforcement are still below the code allowables with large margins as shown in Table 3.8-13 (4). Stress calculations in Table 3.8-13 (4) were performed for the following combinations to consider the effects of three directional inputs:

1) 1.0EW_uplift +/- 0.4NS_linear + Other loads (excluding DL)
2) 1.0WE_uplift +/- 0.4NS_linear + Other loads (excluding DL)

In the above combinations, linear analysis results that do not consider the basemat uplift are used for the NS direction earthquake. However, since significant uplift will not occur for 0.4NS, the results are considered to be acceptable.

No DCD change was made in response to this RAI.

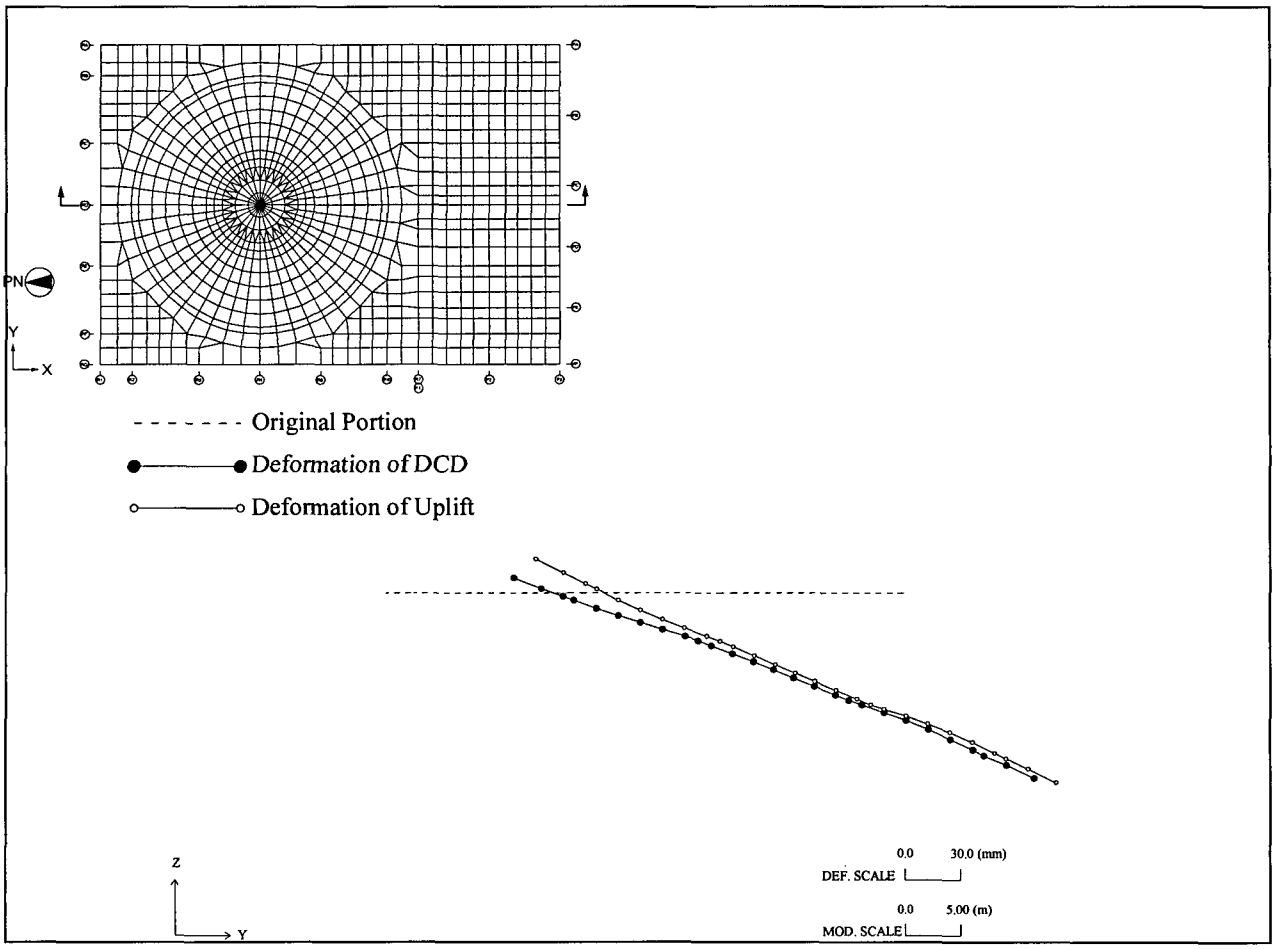

a) West to East

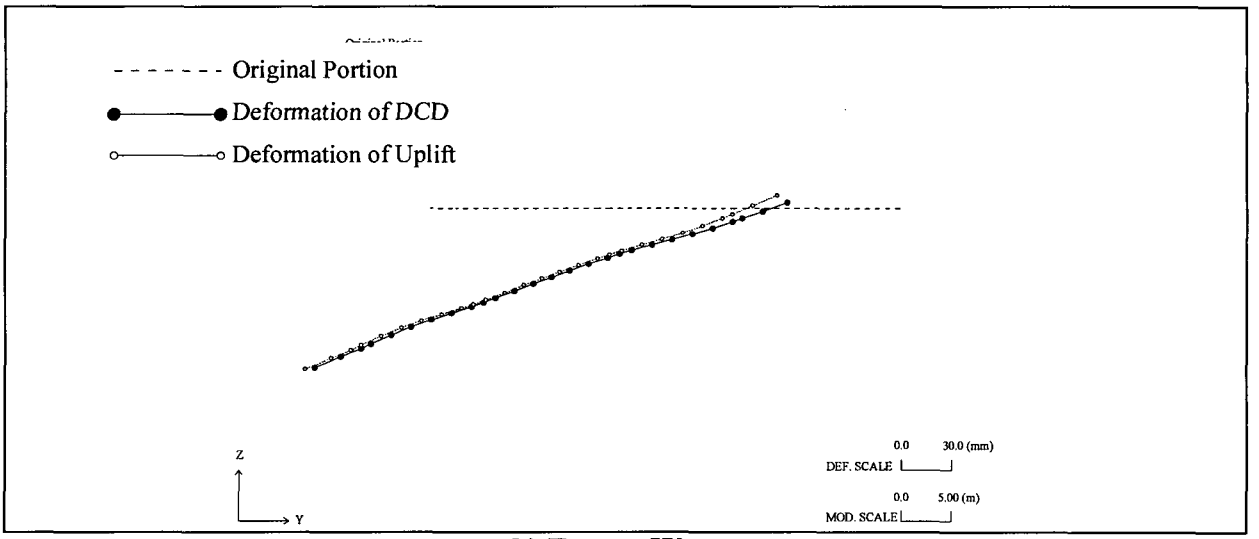

b) East to West

Figure 3.8-13 (6) Comparison of Basemat Deformation without Tension Springs

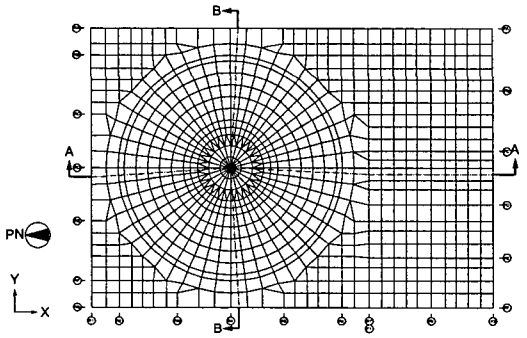

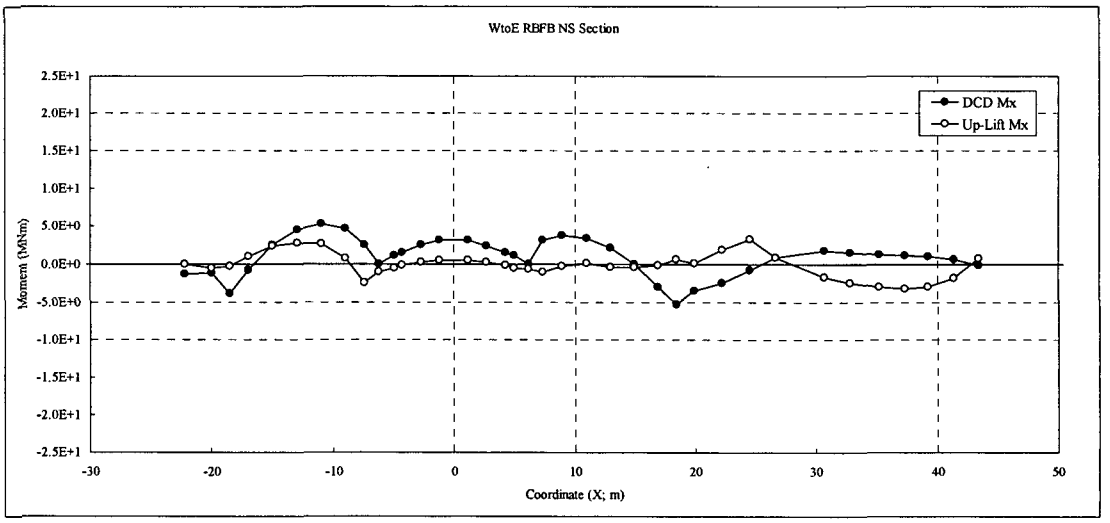

(a) Mx in A-A Section

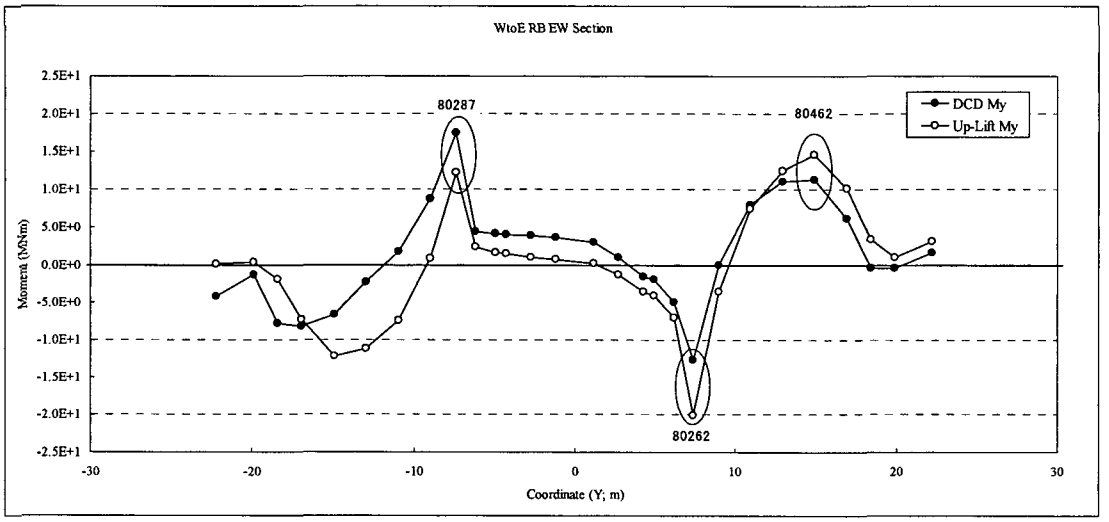

(b) My in B-B Section

Figure 3.8-13 (7) Comparison of Basemat Sectional Moments (W to E)

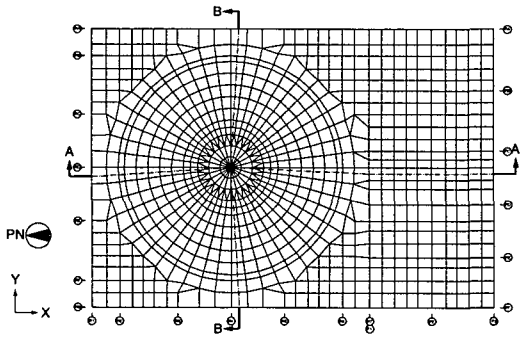

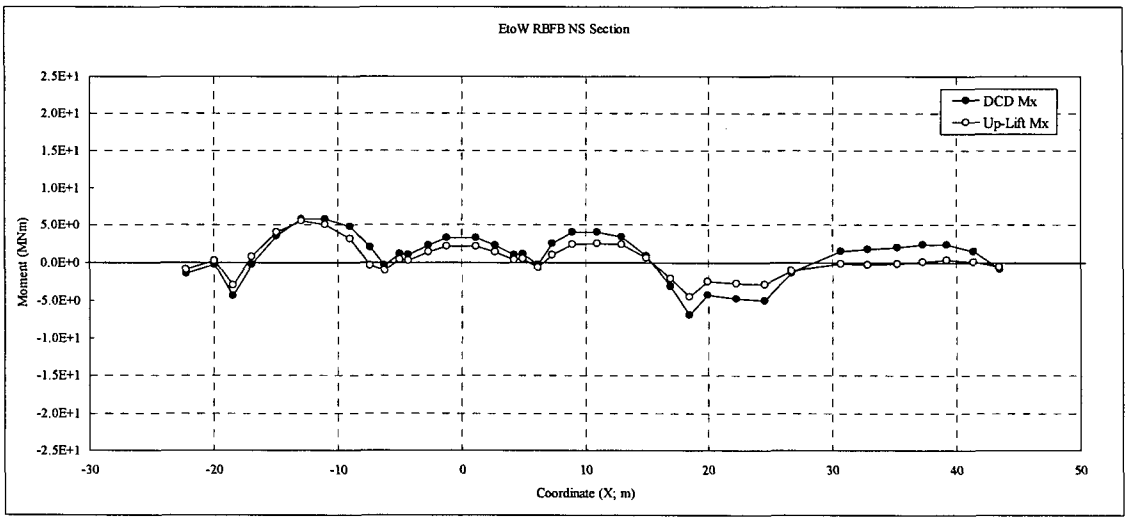

(a) Mx in A-A Section

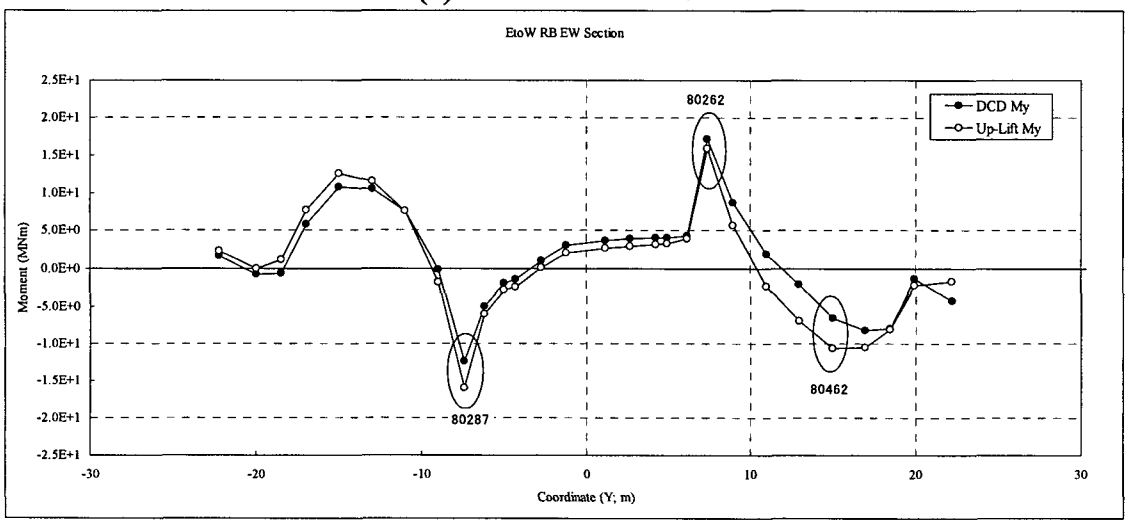

(b) My in B-B Section

Figure 3.8-13 (8) Comparison of Basemat Sectional Moments (E to W)

Table 3.8-13(4) Concrete and Rebar stresses

[DCD Design]

Seismic Force Direction	Soil Condition	Element ID	Load	Concrete Stress (MPa)		Primary Reinforcement Stress (MPa)				
				Calculated	Allowable	Radial		Circumferential		Allowable
						Top	Bottom	Top	Bottom	
EW	Soft	80262	SSE+LOCA 6min	-7.5	-23.5	-35.1	89.6	-0.4	43.6	372.2
			SSE+LOCA 72h	-5.6	-23.5	-32.9	-7.4	16.1	11.8	372.2
		80287	SSE+LOCA 6min	-6.2	-23.5	-32.0	75.2	0.6	21.6	372.2
			SSE+LOCA 72h	-4.8	-23.5	-31.0	-9.2	28.0	-15.3	372.2
		80462	SSE+LOCA 6min	-3.8	-23.5	46.6	2.8	-1.4	-17.9	372.2
			SSE+LOCA 72h	-7.3	-23.5	106.1	-14.8	75.7	-27.6	372.2

[Cut-off Soil Springs in tension]

Seismic Force Direction	Soil Condition	Element ID	Load	Concrete Stress (MPa)		Primary Reinforcement Stress (MPa)				
				Calculated	Allowable	Radial		Circumferential		Allowable
						Top	Bottom	Top	Bottom	
W to E	Soft	80262	SSE+LOCA 6min	-17.9	-23.5	-58.7	175.6	-20.4	191.1	372.2
			SSE+LOCA 72h	-18.4	-23.5	-60.8	183.5	-20.2	193.4	372.2
		80462	SSE+LOCA 6min	-12.0	-23.5	227.7	-9.8	11.5	-48.2	372.2
			SSE+LOCA 72h	-11.5	-23.5	225.6	-8.4	-11.5	-47.2	372.2
E to W	Soft	80287	SSE+LOCA 6min	-14.6	-23.5	-49.1	140.8	-14.6	149.7	372.2
			SSE+LOCA 72h	-15.3	-23.5	-52.1	147.2	-15.4	150.4	372.2
		80462	SSE+LOCA 6min	-8.5	-23.5	-43.9	166.6	71.4	113.5	372.2
			SSE+LOCA 72h	-9.0	-23.5	-43.9	175.4	64.9	123.6	372.2

Note: For the locations of elements, see Figure 3.8-13 (7) and (8).

NRC RAI 3.8-13, Supplement 3

NRC Assessment Following the December 14, 2006 Audit

For part a), DCD should discuss the study performed for the varying soil springs (hard vs soft) and consideration of no tension springs, as well as the results showing higher responses than used in the design. Also, since some loadings with hard soil and with no tension springs resulted in higher loads, these should be reflected in DCD Tables summarizing results/margins, because otherwise, the current results in the DCD would be misleading. Part b) will be addressed in GE's responses to RAI 3.8-92, -90, & -94.

During the audit, GE provided a draft supplemental response to address the part a) item which states that the "DCD Tables will be updated summarizing the results of the study performed." GE should also include a description (in text form) to go along with the revised DCD Tables to summarize what was done in the study and the conclusions reached. See above for part b)

GE Response

a) DCD Tier 2 Sections 3.8.5.4 and 3G.1.5.5.1 will be revised in the next update summarizing results of the study performed as noted in the attached markup.

b) See responses to NRC RAIs 3.8-90, 92 and 94.

DCD Impact

DCD Tier 2 Sections 3.8.5.4 and 3G.1.5.5.1 will be revised in the next update as noted in the attached markup.

DCD Tier 2 Table 3G.1-59 and Figures 3G.1-60 through 3G.1-64 will be added in the next update as noted in the attached markups.

NRC RAI 3.8-14

Based on the information presented in Appendix 3G.1.5.2.1.6 – Thermal Loads and Table 3G.1-6, explain the following:

a) Even though equivalent linear temperature distributions are tabulated in DCD Table 3G.1-6, explain how nonlinear temperature gradients (e.g. SRV discharge or accident temperatures) through the containment wall are considered. This should include a description of the nonlinear temperature effects on the concrete, liner and liner anchors.

b) Temperature values in DCD Table 3G.1-6 are presented for "Winter." Indicate whether temperature distributions are considered for other times of the year as well; if not, then explain.

In addition, (1) identify the applicable detailed report/calculation (number, title, revision and date, and brief description of content) that will be available for audit by the staff, and (2) reference this report/calculation in the DCD.

GE Response

a) The evaluation method of temperature effect on the concrete design is based on ACI 349-01 Commentary Fig. RA.1. The equivalent linear temperature gradient is so determined such that it produces the same uncracked moment about the center line of the section as does the nonlinear temperature distribution.

   Constant temperature distributions are considered for the thin liner and liner anchors.

b) Among all seasons of the year, winter and summer have the most extreme variation in temperatures and they are therefore selected for design conditions for environmental temperature loading. Sectional moments in concrete structures for the winter conditions are, in general, larger than those for the summer considering the temperature differences between room and exterior or inside and outside RCCV. Therefore, only the controlling "winter" case is presented in the DCD.

(1) The applicable detailed report/calculation that will be available for NRC audit are,

- 26A6649, RB FB Heat Transfer Analysis Report, Revision 0, September 2005, containing the evaluation results of temperature loads used for the design of the RB and the FB.
- 26A6650, RCCV Structural Design Report, Revision 1, November 2005, containing the structural design details of the RCCV.
- 26A6651, RB Structural Design Report, Revision 1, November 2005, containing the structural design details of the Reactor Building.

(2) Since this information exists as part of GE internal tracking system, it is not necessary to add it to the DCD submittal to the NRC.

Markups of DCD Tier 2, Appendix 3G.1.5.2.1.6 were provided in MFN 06-191.

NRC RAI 3.8-14, Supplement 1

Additional topics discussed at audit

a) On page 3.8-3 of the DCD add References 31 & 33 and add ACI 349-01 as the applicable code.

b) Provide a summary description of the presentation made at the audit of temperatures used in the thermal analysis including:

- *Rapid heat-up of the thin liner to DW temperature.*
- *Use of average temperatures to select the steel and concrete material properties.*
- *Constant properties through the concrete do not vary as a function of temperature.*

GE Response

a) Item 31 (RG 1.142) and Item 33 (RG 1.199) of Table 3.8-9 will be added in DCD Section 3.8.1.2.3 in the next update as noted in the attached markup. ACI 349-01 will be called out in DCD Section 3.8.1.2.2 by reference to Table 3.8-9 item 1 in the next update as noted in the attached markup.

b) In the global stress analysis model, walls, slabs, and liner plates are modeled using quadrilateral or triangular shell elements as described in DCD Appendix 3G.1.4.1.

The RCCV liner plate is thin with relatively large heat conductivity. The surface heat transfer coefficients for the inside RCCV are set to be infinite for the LOCA conditions. Therefore, the temperatures of the liner plates are assumed to be the same as atmospheric temperatures to which the liners are exposed in the thermal analysis.

In the thermal stress analyses, average temperature and temperature gradient evaluated according to the method shown in ACI 349-01 Commentary Fig. RA.1 are applied to a concrete element. Reductions of material properties that are described in DCD Appendix 3G.1.5.2.3.1 are determined based on the average temperature of the concrete element.

No DCD change was required in response to this RAI Supplement.

NRC RAI 3.8-14, Supplement 2

NRC Assessment Following the December 14, 2006 Audit

Part a) is acceptable; for the thermal analyses discussed in part b), it is not clear to the staff that using constant thermal properties (e.g., strength and E) based on the average temperature through the thickness of the concrete material is appropriate or conservative. What is the typical linear thermal gradient across a concrete element, compared to the element's average temperature? What would the fully- constrained thermal stress be at the two surfaces and at the midpoint of a typical concrete element, based on a linear temperature gradient across the element? Provide these calculations for (1) the assumed uniform material properties based on the average temperature; and (2) a linear variation in material properties across the element, consistent with the linear temperature gradient.

During the audit, GE provided a draft supplemental response to address the part b) item. Describe the type of model used for this particular study (e.g., 3-D, finite element brick elements of the RB using what computer program). Clarification is needed for Figure 3.8-14(4) - stress or force (Ny) and Table 3.8-14(1) force and moment across entire section?

GE Response

Evaluation is performed for the general portion of the RCCV Drywell, which is shown as CV4 in Figure 3.8-14(1). Figure 3.8-14(2) shows the temperature distribution in section CV4 for the Winter condition. It is taken from a 2D transient temperature distribution analysis, using computer code TEMCOM2, as described in DCD Tier 2 Section 3C.5, assuming an equivalent linear temperature distribution. Two cases are selected: 6 minutes and 72 hours after DBA. Figure 3.8-14(3) shows Young's Modulus (E) distributions across the section in terms of equivalent linear temperature and average temperature. The reduction factor of E for concrete is shown in DCD Tier 2 Section 3G.1.5.2.3.1.

Figure 3.8-14(4) shows the thermal stress distribution across the section calculated from the thermal expansion coefficient in accordance with the linear temperature gradient. The stresses are evaluated by the following formula:

$$S(i) = E \cdot \Delta t \cdot \varphi$$

where:

$S(i)$: stress in section

E: Young's modulus

Δt : relative temperature ($= Ti - T_0$)

Ti: temperature in section

T_0: stress free temperature

φ: thermal expansion coefficient

Two cases are compared: i) uniform Young's modulus, Em, based on the average temperature, and ii) varying Young's modulus, Et, based on linear temperature gradient. Table 3.8-14(1) compares axial force and bending moment computed from two E values. Case i) results are larger; hence, the design approach used for E value determination on the basis of average temperature is adequate.

DCD Impact

No DCD change was required in response to this RAI Supplement.

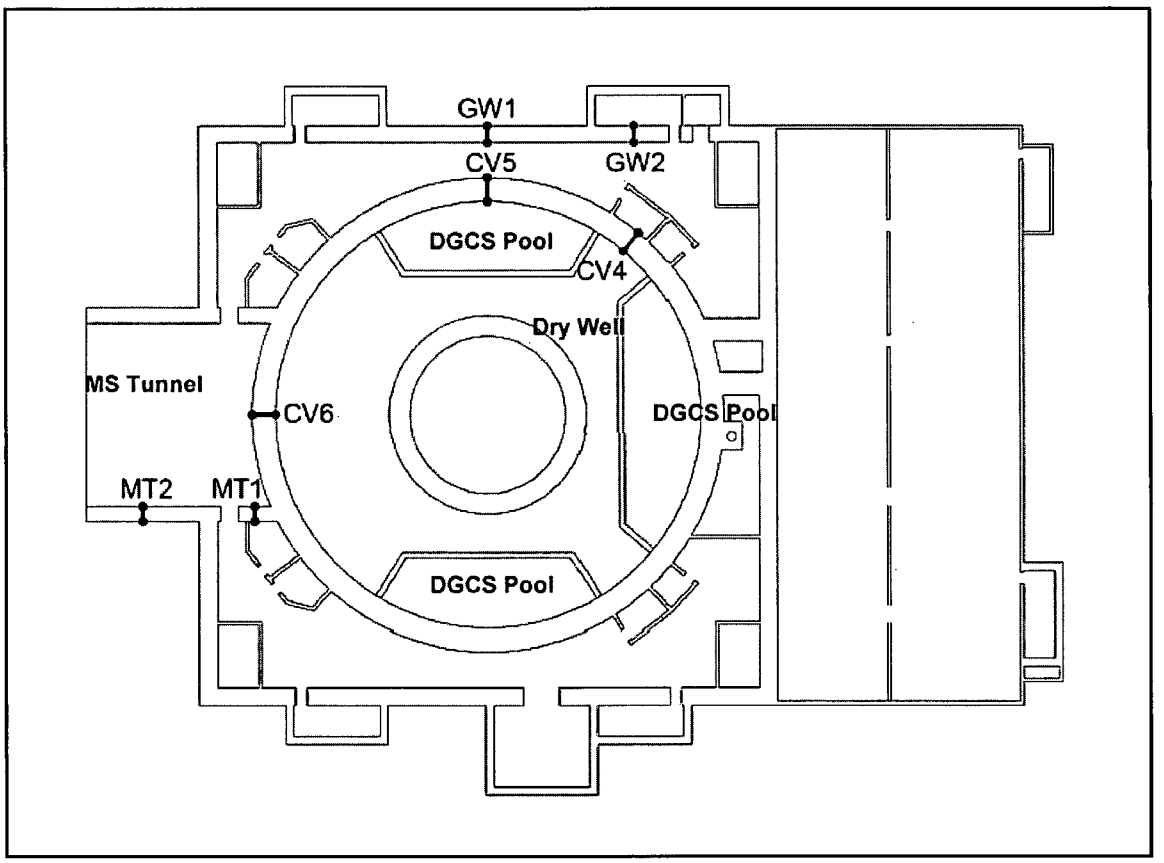

Figure 3.8-14(1) Analyzed Section (Plan, DW)

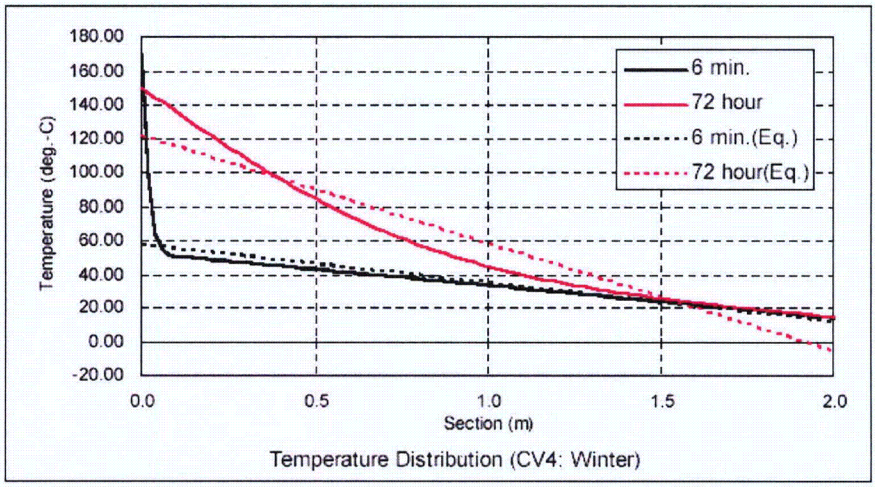

Figure 3.8-14(2). Temperature Distribution in Section (RCCV Wall: CV4: Winter)

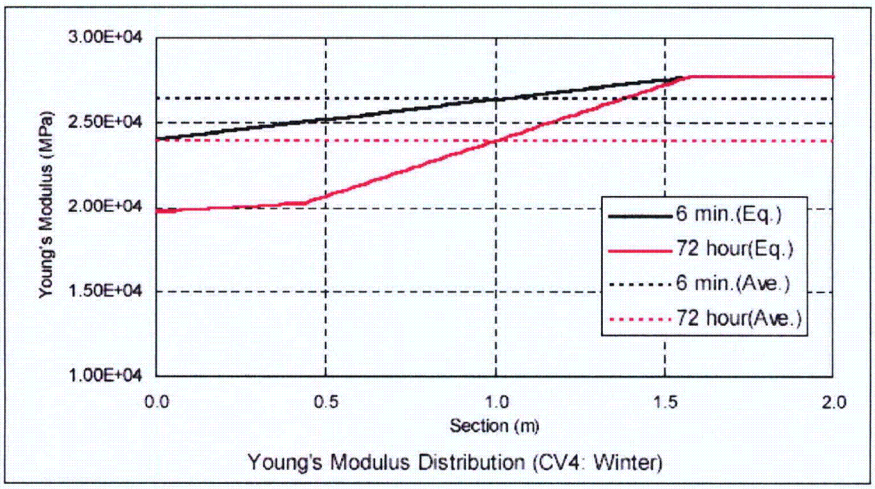

Figure 3.8-14(3). Young's Modulus Distribution in Section (RCCV Wall: CV4: Winter)

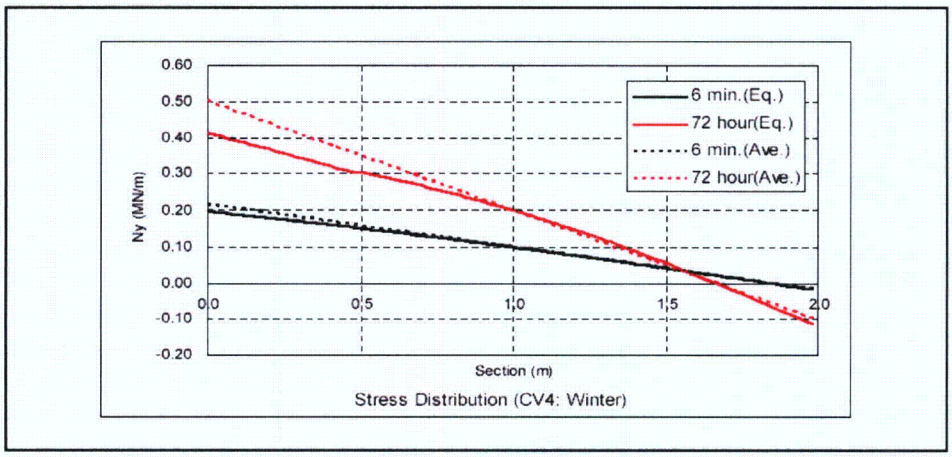

Figure 3.8-14(4). Stress Distribution in Section (RCCV Wall: CV4: Winter)

Table 3.8-14(1) Comparison of Section Forces

	After DBA 6 min.		After DBA 72 hours		Note
	Force Ny (MN)	Moment (MN·m)	Force Ny (MN)	Moment (MN·m)	
i)	1.00E+01	4.04E+00	2.02E+01	1.03E+01	*Based on E_m*
ii)	9.68E+00	3.73E+00	1.80E+01	8.75E+00	*Based on Et*
Ratio i/ii	1.036	1.081	1.122	1.173	

NRC RAI 3.8-18

Describe how the reinforced concrete containment shell and basemat material and stiffness properties are represented in the shell finite element NASTRAN model (e.g., monolithic concrete properties with Young's modulus, thickness, Poisson's ratio, and density corresponding to only concrete – neglecting the steel). For pressure, thermal, seismic, and hydrodynamic loads, explain how the effects of concrete cracking are considered in the NASTRAN overall building analysis. If the concrete stresses are very low for some loading combinations, there may still be regions where cracking in the concrete develop due to the containment structural integrity tests (SIT), thermal loads, and pressure loads. (DCD Section 3.8.1.4.1)

In addition, (1) identify the applicable detailed report/calculation (number, title, revision and date, and brief description of content) that will be available for audit by the staff, and (2) reference this report/calculation in the DCD.

GE Response

Concrete properties for the containment shell and basemat material include all those as stated and they are considered to be linear elastic in the NASTRAN model as described in DCD Section 3.8.1.4.1.2. Reinforcing steel is not explicitly modeled and its weight is included in the overall reinforced concrete density.

Cracking of concrete is not explicitly considered in the NASTRAN calculations as allowed in ASME Sec. III, Div. 2, CC-3320. However, cracking is considered in the design of the cross section utilizing the SSDP-2D program as described in DCD Section 3.8.1.4.1.2, which does not allow tensile stress in the concrete. Section forces generated by NASTRAN are input to the SSDP-2D program. This procedure is used for all loads except LOCA thermal loads.

The concrete cracking effects for LOCA thermal loads are explicitly included by performing a non linear concrete cracking analysis using ABAQUS/ANACAP software as described in DCD Section 3.8.1.4.1.3.

(1) The applicable detailed report/calculation that will be available for NRC audit are,

- 26A6650, RCCV Structural Design Report, Revision 1, November 2005, containing the structural design details of the RCCV
- 26A6651, RB Structural Design Report, Revision 1, November 2005, containing the structural design details of he Reactor Building

(2) Since this information exists as part of GE internal tracking system, it is not necessary to add it to the DCD submittal to the NRC.

No DCD change was required in response to this RAI Supplement.

NRC RAI 3.8-18, Supplement 1

Additional topics discussed at audit

a) *Indicate how the stick model was verified against the more detailed NASTRAN model for frequency correlation.*

b) *The effect of internal force and moment re-distribution due to cracking shall be addressed. If the ratio of cracked to un-cracked results is close to 1.0, then the assumptions in NASTRAN would be acceptable for Normal Condition.*

c) *Shear effect added to the calculation of normal stresses and principal stresses should be used to show that there is no cracking in concrete due to small magnitude of stresses obtained.*

GE Response

a) A new RAI 3.7-59 has been issued for this topic. See response to RAI 3.7-59.

b) To justify the use of linear elastic NASTRAN model without consideration of internal force and moment redistribution due to concrete craking, the NASTRAN results of the SIT condition are examined. The results are summarize below:

The maximum concrete tensile stresses in the RCCV elements, which are listed in DCD Appendix 3G, are calculated for the SIT load combination, and calculated stresses are compared with the tensile strength of concrete. The tensile strength of concrete is evaluated using the following equation which is described in Reference 3.8-18 (1).

$$f_{ct} = 0.1 f_c'$$

where,

f'_c = compressive strength of concrete (27.6 MPa for basemat, 34.5 MPa for others)

The results are shown in Tables 3.8-18 (1) through 3.8-18 (3). Table 3.8-18 (1) shows the results of the calculations using the membrane forces and bending moments in the x and y directions. Tables 3.8-18 (2) and (3) show the tensile stresses in the pricipal membrane force and principal bending moment directions respectively, which are calculated including the effects of shear forces and torsional moments.

As shown in the tables, tensile stresses exceed the tensile strength only in a few elements. Therefore, there is hardly any cracking in concrete for the SIT condition.

Since the concrete containment remains uncracked after the pre-service SIT tests, the use of elastic NASTRAN model for design analysis is justified. For seismic loads, concrete

cracking is considered by overall stiffness reduction in the seismic analysis stick model (see response to RAI 3.7-50). The resulting seismic design loads applied to the NASTRAN stress analysis model thus include the concrete cracking effect.

Reference 3.8-18 (1): Phil M. Ferguson "Reinforced Concrete Fundamentals," Third Edition, Section 1.3, John Willey & Sons, Inc.

c) In accordance with NRC's comments, tensile stresses in the pricipal membrane force and principal bending moment directions are calculated including the effects of shear forces and torsional moments. The results are shown in Tables 3.8-18 (2) and 3.8-18 (3). Along with Table 3.8-18 (1), concrete tensile stesses are less than the concrete tensile strength in almost all elements. Therefore, cracking of concrete hardly occurs in concrete for the SIT condition.

Table 3.8-18 (1) Tensile Stress in RCCV Concrete for SIT

			Direction x			Direction y		
Location	Element ID	t (n)	Nx (MN/m)	Mx (MNm/m)	Stress (MPa)	Ny (MN/m)	My (MNm/m)	Stress (MPa)
1 RPV	5006	2.4	-1.727	0.275	-0.38	-6.401	1.551	-0.93
Pedestal	5013	2.4	-2.322	0.163	-0.71	-6.785	1.662	-0.97
Bottom	5024	2.4	-2.066	0.394	-0.40	-6.398	1.508	-0.97
2 RPV	6006	2.4	1.042	-0.049	0.43	-6.118	-0.183	-2.09
Pedestal	6013	2.4	0.749	-0.208	0.47	-6.140	-0.225	-2.06
Mid-Height	6024	2.4	1.103	0.311	0.69	-4.503	0.115	-1.56
3 RPV	6606	2.4	0.537	0.562	0.72	-5.344	3.555	1.31
Pedestal	6613	2.4	0.219	0.423	0.47	-5.533	3.594	1.27
Top	6624	2.4	0.839	0.574	0.84	-5.202	3.301	1.13
4 RCCV	1806	2.0	0.376	0.321	0.58	-1.977	1.958	1.69
Wetwell	1813	2.0	0.091	0.326	0.46	-2.467	2.120	1.69
Bottom	1824	2.0	0.586	0.318	0.67	-2.541	1.823	1.27
5 RCCV	2606	2.0	2.671	-0.160	1.36	-1.526	-0.650	0.18
Wetwell	2613	2.0	2.262	-0.201	1.24	-2.175	-0.685	-0.05
Mid-Height	2624	2.0	2.588	-0.101	1.25	-2.151	-0.679	-0.05
6 RCCV	3406	2.0	2.479	-0.024	1.06	-0.900	0.015	-0.36
Wetwell	3413	2.0	2.098	-0.100	1.00	-1.977	-0.158	-0.63
Top	3424	2.0	1.934	0.093	0.92	-1.509	0.438	-0.08
7 RCCV	3606	2.0	2.464	-0.032	1.08	-0.495	0.012	-0.19
Drywell	3613	2.0	2.145	-0.029	0.94	-1.537	0.252	-0.33
Bottom	3624	2.0	1.927	0.126	0.97	-1.314	0.621	0.23
8 RCCV	4006	2.0	1.797	-0.107	0.92	-0.169	-0.416	0.47
Drywell	4013	2.0	1.725	-0.148	0.94	-1.830	-0.514	-0.12
Mid-Height	4976	2.0	1.561	-0.013	0.69	-0.735	-0.177	-0.09
9 RCCV	4406	2.0	0.600	0.320	0.68	0.050	1.699	2.23
Drywell	4413	2.0	-0.150	0.254	0.27	-2.122	2.000	1.68
Top	4424	2.0	1.057	0.350	0.91	-0.281	1.987	2.46
10 Basemat	80003	4.0	-2.942	1.035	-0.32	-1.742	1.317	0.05
@ Center	80007	4.0	-2.979	1.083	-0.32	-1.751	1.332	0.06
	80012	4.0	-3.025	1.096	-0.32	-1.740	1.348	0.07
11 Basemat	80206	4.0	-2.658	-0.915	-0.30	-1.873	-0.674	-0.20
Inside	80213	4.0	-2.772	-0.043	-0.63	-1.755	-1.330	0.06
RPV Pedest	80224	4.0	-3.233	-1.239	-0.32	-2.037	-0.088	-0.44
12 S/P Slab	83306	2.0	-0.016	0.057	0.07	1.200	0.890	1.71
@ RPV	83313	2.0	0.148	0.127	0.23	0.948	0.914	1.63
	83324	2.0	0.177	0.072	0.17	1.482	0.887	1.83
13 S/P Slab	83406	2.0	0.297	-2.978	**3.91**	0.897	-0.510	1.03
@ Center	83413	2.0	0.580	-2.948	**3.99**	0.677	-0.511	0.93
	83424	2.0	0.397	-2.923	**3.88**	1.156	-0.498	1.12
14 S/P Slab	83506	2.0	0.446	0.896	1.38	0.768	-0.166	0.56
@ RCCV	83513	2.0	0.760	0.881	1.49	0.603	-0.171	0.49
	83524	2.0	0.457	0.965	1.47	1.054	-0.129	0.63
15 Top slab	98120	2.4	0.289	0.182	0.29	0.934	0.098	0.45
@ Drywell	98135	2.4	-0.376	0.270	0.11	0.222	-0.292	0.36
Head	98104	2.4	0.355	0.191	0.32	1.944	1.348	2.04
16 Top slab	98149	2.4	-0.016	0.274	0.26	1.283	0.041	0.53
@ Center	98170	2.4	0.182	0.464	0.51	0.921	0.782	1.10
	98109	2.4	0.646	1.101	1.30	1.371	1.409	1.88
17 Top slab	98174	2.4	0.444	-0.116	0.28	1.149	-0.028	0.47
@ RCCV	98197	2.4	0.282	-0.210	0.31	1.209	-1.380	1.79
	98103	2.4	0.929	-0.537	0.87	1.495	0.462	1.02

Note *: RCCV, Pedestal: Direction x : Hoop, Direction y: Vertical, S/P Slab Direction x : Radial, Direction y : Circumferential; Top slab, Basemat: Direction x : N-S, Direction y : E-W

Table 3.8-18 (2) Tensile Stress in RCCV Concrete for SIT (Calculated in Principal Membrane Force Direction)

Location	Element ID	t (m)	Nx (MN/m)	Ny (MN/m)	Nxy (MN/m)	Mx (MNm/m)	My (MNm/m)	Mxy (MNm/m)	θ	N (MN/m)	M (MNm/m)	Stress (MPa)
1 RPV	5006	2.4	-1.727	-6.401	-0.058	0.275	1.551	0.035	1.543	-6.401	1.552	-0.89
Pedestal	5013	2.4	-2.322	-6.785	0.057	0.163	1.662	-0.003	-1.569	-6.785	1.662	-0.93
Bottom	5024	2.4	-2.066	-6.398	0.055	0.394	1.508	-0.008	-1.564	-6.399	1.508	-0.93
2 RPV	6006	2.4	1.042	-6.118	0.013	-0.049	-0.183	0.017	0.124	0.935	-0.047	0.39
Pedestal	6013	2.4	0.749	-6.140	0.197	-0.208	-0.225	0.003	0.170	0.618	-0.207	0.42
Mid-Height	6024	2.4	1.103	-4.503	-0.422	0.311	0.115	0.014	0.071	1.015	0.312	0.66
3 RPV	6606	2.4	0.537	-5.344	0.648	0.562	3.555	-0.005	-1.569	-5.346	3.555	1.25
Pedestal	6613	2.4	0.219	-5.533	0.019	0.423	3.594	-0.061	-1.552	-5.532	3.595	1.22
Top	6624	2.4	0.839	-5.202	0.214	0.574	3.301	0.099	1.535	-5.179	3.305	1.09
4 RCCV	1806	2.0	0.376	-1.977	-0.056	0.321	1.958	0.019	1.559	-1.978	1.958	1.62
Wetwell	1813	2.0	0.091	-2.467	0.175	0.326	2.120	0.000	1.571	-2.467	2.120	1.62
Bottom	1824	2.0	0.586	-2.541	-0.008	0.318	1.823	0.007	1.566	-2.541	1.823	1.22
5 RCCV	2606	2.0	2.671	-1.526	-0.123	-0.160	-0.650	0.001	0.002	2.670	-0.160	1.36
Wetwell	2613	2.0	2.262	-2.175	0.186	-0.201	-0.685	0.001	0.002	2.263	-0.201	1.24
Mid-Height	2624	2.0	2.588	-2.151	-0.029	-0.101	-0.679	-0.005	-0.009	2.588	-0.101	1.25
6 RCCV	3406	2.0	2.479	-0.900	0.042	-0.024	0.015	0.020	1.172	-0.360	0.023	-0.12
Wetwell	3413	2.0	2.098	-1.977	0.166	-0.100	-0.158	-0.079	-0.609	0.607	-0.045	0.31
Top	3424	2.0	1.934	-1.509	0.034	0.093	0.438	0.009	1.545	-1.505	0.438	-0.08
7 RCCV	3606	2.0	2.464	-0.495	-0.076	-0.032	0.012	0.048	1.000	0.299	0.043	0.18
Drywell	3613	2.0	2.145	-1.537	0.273	-0.029	0.252	-0.050	-1.400	-1.522	0.261	-0.31
Bottom	3624	2.0	1.927	-1.314	0.050	0.126	0.621	0.007	1.557	-1.312	0.621	0.23
8 RCCV	4006	2.0	1.797	-0.169	-0.028	-0.107	-0.416	0.010	0.032	1.793	-0.107	0.92
Drywell	4013	2.0	1.725	-1.830	0.414	-0.148	-0.514	0.004	0.011	1.734	-0.148	0.94
Mid-Height	4976	2.0	1.561	-0.735	0.079	-0.013	-0.177	0.006	0.037	1.564	-0.013	0.69
9 RCCV	4406	2.0	0.600	0.050	-0.062	0.320	1.699	-0.026	-1.552	0.053	1.699	2.23
Drywell	4413	2.0	-0.150	-2.122	0.294	0.254	2.000	0.041	1.547	-2.107	2.001	1.69
Top	4424	2.0	1.057	-0.281	0.049	0.350	1.987	0.022	1.557	-0.279	1.987	2.43
10 Basemat	80003	4.0	-2.942	-1.742	0.128	1.035	1.317	-0.019	-1.504	-1.764	1.318	0.05
@ Center	80007	4.0	-2.979	-1.751	0.113	1.083	1.332	-0.007	-1.543	-1.758	1.332	0.06
	80012	4.0	-3.025	-1.740	0.113	1.096	1.348	-0.013	-1.519	-1.755	1.349	0.06
11 Basemat	80206	4.0	-2.658	-1.873	0.186	-0.915	-0.674	0.704	0.870	-2.016	-0.080	-0.44
Inside	80213	4.0	-2.772	-1.755	0.088	-0.043	-1.330	-0.070	-0.054	-2.779	-0.039	-0.63
RPV Pedest	80224	4.0	-3.233	-2.037	0.057	-1.239	-0.088	-0.116	-1.471	-2.060	-0.076	-0.46
12 S/P Slab	83306	2.0	-0.016	1.200	-0.428	0.057	0.890	-0.052	-1.509	1.248	0.893	1.75
@ RPV	83313	2.0	0.148	0.948	-0.076	0.127	0.914	0.019	1.547	0.944	0.914	1.64
	83324	2.0	0.177	1.482	0.033	0.072	0.887	-0.024	-1.541	1.479	0.888	1.84
13 S/P Slab	83406	2.0	0.297	0.897	-0.292	-2.978	-0.510	-0.031	-1.558	0.904	-0.510	1.08
@ Center	83413	2.0	0.580	0.677	-0.037	-2.948	-0.511	-0.009	-1.567	0.677	-0.511	0.98
	83424	2.0	0.397	1.156	0.029	-2.923	-0.498	0.004	1.569	1.156	-0.498	1.18
14 S/P Slab	83506	2.0	0.446	0.768	-0.202	0.896	-0.166	-0.025	-0.024	0.456	0.897	1.38
@ RCCV	83513	2.0	0.760	0.603	-0.030	0.881	-0.171	-0.006	-0.006	0.760	0.881	1.49
	83524	2.0	0.457	1.054	0.035	0.965	-0.129	-0.001	-0.001	0.457	0.965	1.47
15 Top slab	98120	2.4	0.289	0.934	0.507	0.182	0.098	0.082	0.549	0.916	0.232	0.57
@ Drywell	98135	2.4	-0.376	0.222	-0.244	0.270	-0.292	0.091	0.157	-0.437	0.284	0.11
Head	98104	2.4	0.355	1.944	-0.425	0.191	1.348	-0.108	-1.479	2.009	1.358	2.07
16 Top slab	98149	2.4	-0.016	1.283	-0.200	0.274	0.041	-0.105	-0.367	0.285	0.314	0.41
@ Center	98170	2.4	0.182	0.921	-0.259	0.464	0.782	-0.039	-1.451	0.972	0.787	1.13
	98109	2.4	0.646	1.371	-0.090	1.101	1.409	-0.049	-1.417	1.381	1.417	1.86
17 Top slab	98174	2.4	0.444	1.149	0.002	-0.116	-0.028	0.344	0.849	0.843	0.275	0.59
@ RCCV	98197	2.4	0.282	1.209	-0.228	-0.210	-1.380	-0.091	-0.077	0.323	-0.203	0.32
	98103	2.4	0.929	1.495	-0.078	-0.537	0.462	-0.264	-1.328	1.499	0.527	1.07

Table 3.8-18 (3) Tensile Stress in RCCV Concrete for SIT (Calculated in Principal Bending Moment Direction)

Location	Element ID	t (m)	Nx (MN/m)	Ny (MN/m)	Nxy (MN/m)	Mx (MNm/m)	My (MNm/m)	Mxy (MNm/m)	θ	N (MN/m)	M (MNm/m)	Stress (MPa)
1 RPV	5006	2.4	-1.727	-6.401	-0.058	0.275	1.551	0.035	-0.027	-1.727	0.274	-0.38
Pedestal	5013	2.4	-2.322	-6.785	0.057	0.163	1.662	-0.003	-3.140	-2.322	0.163	-0.71
Bottom	5024	2.4	-2.066	-6.398	0.055	0.394	1.508	-0.008	-3.134	-2.065	0.394	-0.40
2 RPV	6006	2.4	1.042	-6.118	0.013	-0.049	-0.183	0.017	0.124	0.935	-0.047	0.39
Pedestal	6013	2.4	0.749	-6.140	0.197	-0.208	-0.225	0.003	0.170	0.618	-0.207	0.42
Mid-Height	6024	2.4	1.103	-4.503	-0.422	0.311	0.115	0.014	0.071	1.015	0.312	0.66
3 RPV	6606	2.4	0.537	-5.344	0.648	0.562	3.555	-0.005	-1.569	-5.346	3.555	1.25
Pedestal	6613	2.4	0.219	-5.533	0.019	0.423	3.594	-0.061	-1.552	-5.532	3.595	1.22
Top	6624	2.4	0.839	-5.202	0.214	0.574	3.301	0.099	1.535	-5.179	3.305	1.09
4 RCCV	1806	2.0	0.376	-1.977	-0.056	0.321	1.958	0.019	1.559	-1.978	1.958	1.62
Wetwell	1813	2.0	0.091	-2.467	0.175	0.326	2.120	0.000	1.571	-2.467	2.120	1.62
Bottom	1824	2.0	0.586	-2.541	-0.008	0.318	1.823	0.007	1.566	-2.541	1.823	1.22
5 RCCV	2606	2.0	2.671	-1.526	-0.123	-0.160	-0.650	0.001	0.002	2.670	-0.160	1.36
Wetwell	2613	2.0	2.262	-2.175	0.186	-0.201	-0.685	0.001	0.002	2.263	-0.201	1.24
Mid-Height	2624	2.0	2.588	-2.151	-0.029	-0.101	-0.679	-0.005	-0.009	2.588	-0.101	1.25
6 RCCV	3406	2.0	2.479	-0.900	0.042	-0.024	0.015	0.020	-0.399	1.939	-0.032	0.85
Wetwell	3413	2.0	2.098	-1.977	0.166	-0.100	-0.158	-0.079	-0.609	0.607	-0.045	0.31
Top	3424	2.0	1.934	-1.509	0.034	0.093	0.438	0.009	-0.026	1.930	0.093	0.92
7 RCCV	3606	2.0	2.464	-0.495	-0.076	-0.032	0.012	0.048	-0.571	1.670	-0.063	0.78
Drywell	3613	2.0	2.145	-1.537	0.273	-0.029	0.252	-0.050	-2.971	2.130	-0.038	0.95
Bottom	3624	2.0	1.927	-1.314	0.050	0.126	0.621	0.007	-0.014	1.925	0.126	0.97
8 RCCV	4006	2.0	1.797	-0.169	-0.028	-0.107	-0.416	0.010	0.032	1.793	-0.107	0.92
Drywell	4013	2.0	1.725	-1.830	0.414	-0.148	-0.514	0.004	0.011	1.734	-0.148	0.94
Mid-Height	4976	2.0	1.561	-0.735	0.079	-0.013	-0.177	0.006	0.037	1.564	-0.013	0.69
9 RCCV	4406	2.0	0.600	0.050	-0.062	0.320	1.699	-0.026	-1.552	0.053	1.699	2.23
Drywell	4413	2.0	-0.150	-2.122	0.294	0.254	2.000	0.041	1.547	-2.107	2.001	1.69
Top	4424	2.0	1.057	-0.281	0.049	0.350	1.987	0.022	1.557	-0.279	1.987	2.43
10 Basemat	80003	4.0	-2.942	-1.742	0.128	1.035	1.317	-0.019	-1.504	-1.764	1.318	0.05
@ Center	80007	4.0	-2.979	-1.751	0.113	1.083	1.332	-0.007	-1.543	-1.758	1.332	0.06
	80012	4.0	-3.025	-1.740	0.113	1.096	1.348	-0.013	-1.519	-1.755	1.349	0.06
11 Basemat	80206	4.0	-2.658	-1.873	0.186	-0.915	-0.674	0.704	-0.701	-2.515	-1.509	-0.06
Inside	80213	4.0	-2.772	-1.755	0.088	-0.043	-1.330	-0.070	-1.625	-1.748	-1.334	0.06
RPV Pedest	80224	4.0	-3.233	-2.037	0.057	-1.239	-0.088	-0.116	-3.042	-3.210	-1.251	-0.31
12 S/P Slab	83306	2.0	-0.016	1.200	-0.428	0.057	0.890	-0.052	-1.509	1.248	0.893	1.75
@ RPV	83313	2.0	0.148	0.948	-0.076	0.127	0.914	0.019	1.547	0.944	0.914	1.64
	83324	2.0	0.177	1.482	0.033	0.072	0.887	-0.024	-1.541	1.479	0.888	1.84
13 S/P Slab	83406	2.0	0.297	0.897	-0.292	-2.978	-0.510	-0.031	-3.129	0.290	-2.978	**3.90**
@ Center	83413	2.0	0.580	0.677	-0.037	-2.948	-0.511	-0.009	-3.138	0.580	-2.948	**3.99**
	83424	2.0	0.397	1.156	0.029	-2.923	-0.498	0.004	-0.002	0.397	-2.923	**3.88**
14 S/P Slab	83506	2.0	0.446	0.768	-0.202	0.896	-0.166	-0.025	-0.024	0.456	0.897	1.38
@ RCCV	83513	2.0	0.760	0.603	-0.030	0.881	-0.171	-0.006	-0.006	0.760	0.881	1.49
	83524	2.0	0.457	1.054	0.035	0.965	-0.129	-0.001	-0.001	0.457	0.965	1.47
15 Top slab	98120	2.4	0.289	0.934	0.507	0.182	0.098	0.082	0.549	0.916	0.232	0.57
@ Drywell	98135	2.4	-0.376	0.222	-0.244	0.270	-0.292	0.091	-1.414	0.283	-0.306	0.40
Head	98104	2.4	0.355	1.944	-0.425	0.191	1.348	-0.108	-1.479	2.009	1.358	2.07
16 Top slab	98149	2.4	-0.016	1.283	-0.200	0.274	0.041	-0.105	-0.367	0.285	0.314	0.41
@ Center	98170	2.4	0.182	0.921	-0.259	0.464	0.782	-0.039	-1.451	0.972	0.787	1.13
	98109	2.4	0.646	1.371	-0.090	1.101	1.409	-0.049	-1.417	1.381	1.417	1.86
17 Top slab	98174	2.4	0.444	1.149	0.002	-0.116	-0.028	0.344	-0.722	0.750	-0.419	0.69
@ RCCV	98197	2.4	0.282	1.209	-0.228	-0.210	-1.380	-0.091	-1.648	1.168	-1.387	1.78
	98103	2.4	0.929	1.495	-0.078	-0.537	0.462	-0.264	-1.328	1.499	0.527	1.07

NRC RAI 3.8-18, Supplement 2

NRC Assessment Following the December 14, 2006 Audit

a) RAI 3.7-59 is still open. b) Only SIT considered not other loads in load combination. c) Why are principal tensile stresses calculated in the direction of principal membrane force direction and in principal bending moment direction; these may not give the maximum principal stresses? d) Is that why principal tensile stresses in Table 3.8-18(2) and (3) were lower than those in Table 3.8-18(1). e) Maximum shear stresses from worst loading combination would be useful to help resolve this (ASCE 4-98 refers to nominal shear stresses are usually kept below 100 psi; another source refers to concrete cracking under SSE with shear stresses below 150 psi NUREG/CR-5407) That is why variation in concrete properties are often used to account for potential concrete cracking (ASCE Report on Stiffness of Low Rise Reinforced Concrete Shear Walls).

During the audit, GE indicated that they will consider performing a confirmatory study which will show that with concrete cracking for a selected portion of the RB /FB, the effect of redistribution of loads is not significant.

GE Response

In order to address the effect of redistribution of loads due to concrete cracking, SSE dynamic analysis using the RBFB global FE model is performed. The analysis method is the same as that used in response to NRC RAI 3.7-59 for comparisons of the stick and FEM models except that the stiffness of RCCV elements in the FE model is reduced by 25% considering concrete cracking.

Element forces at wall bottoms obtained by the analysis are shown in Figure 3.8-18(1) through Figure 3.8-18 (5). The figures also include the results of dynamic analysis and static analysis using uncracked concrete stiffness.

Section forces in RCCV portions are slightly reduced due to concrete cracking. On the other hand, section forces in RB walls are close to each other between the three cases of analyses, and the effect of RCCV concrete cracking is negligibly small.

Therefore, it can be concluded that the effect of redistribution of loads due to concrete cracking is insignificant.

DCD Impact

No DCD change was required in response to this RAI Supplement.

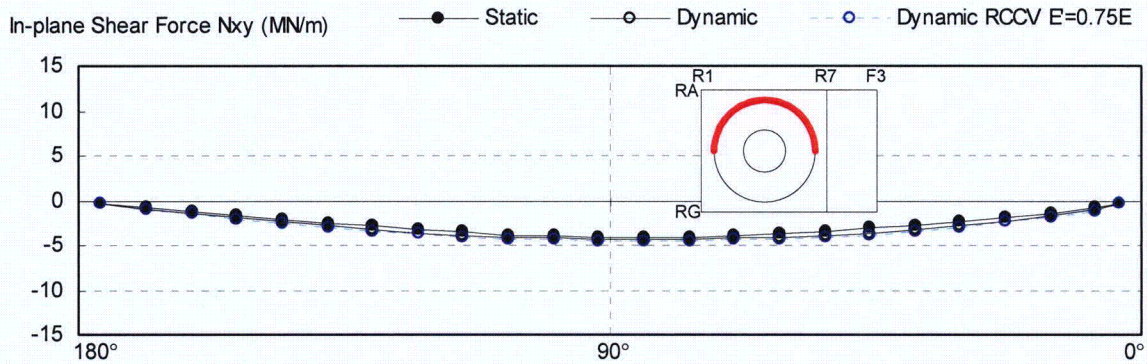

(a) Cylindrical Wall below RCCV Bottom

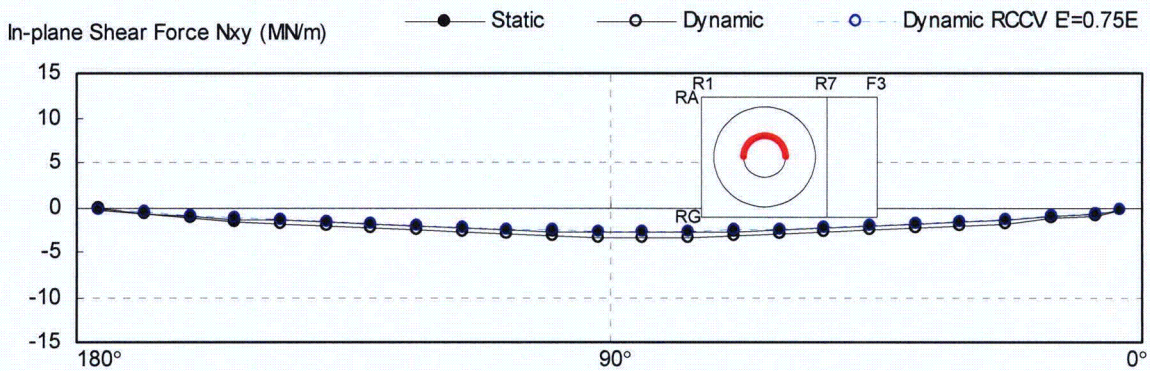

(b) Pedestal Bottom

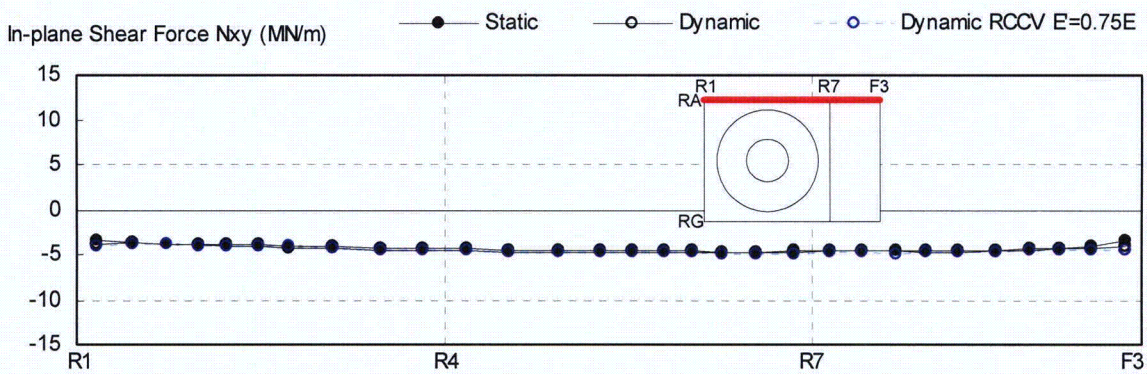

(c) Outer Wall on RA and FA Bottom

Figure 3.8-18(1) Comparison of In-plane Shear Forces, Nxy, in X direction SSE Input

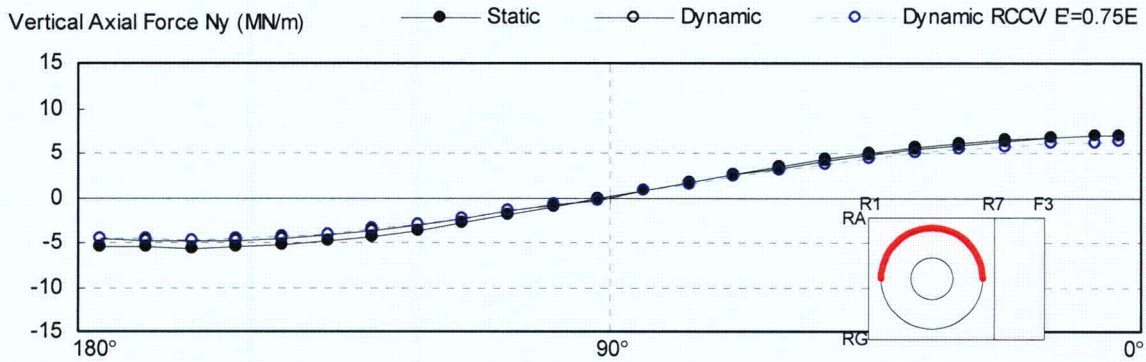

(a) Cylindrical Wall below RCCV Bottom

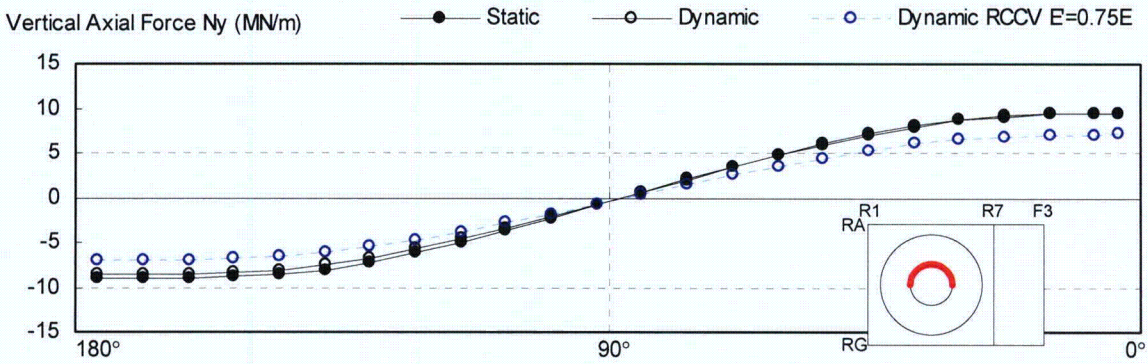

(b) Pedestal Bottom

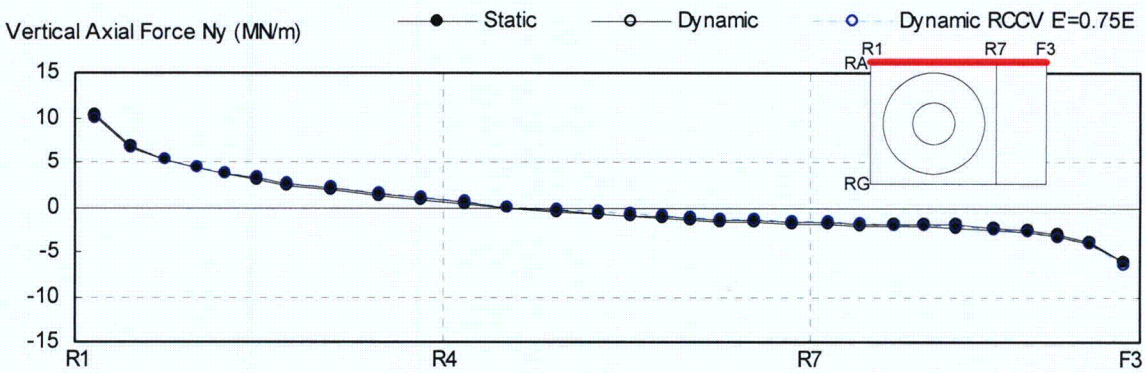

(c) Outer Wall on RA and FA Bottom

Figure 3.8-18(2) Comparison of Vertical Axial Forces, Ny, in X direction SSE Input

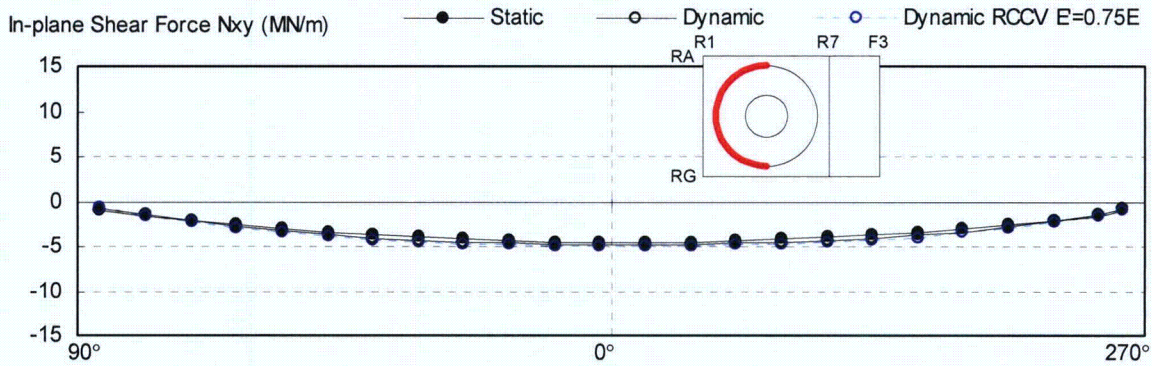

(a) Cylindrical Wall below RCCV Bottom

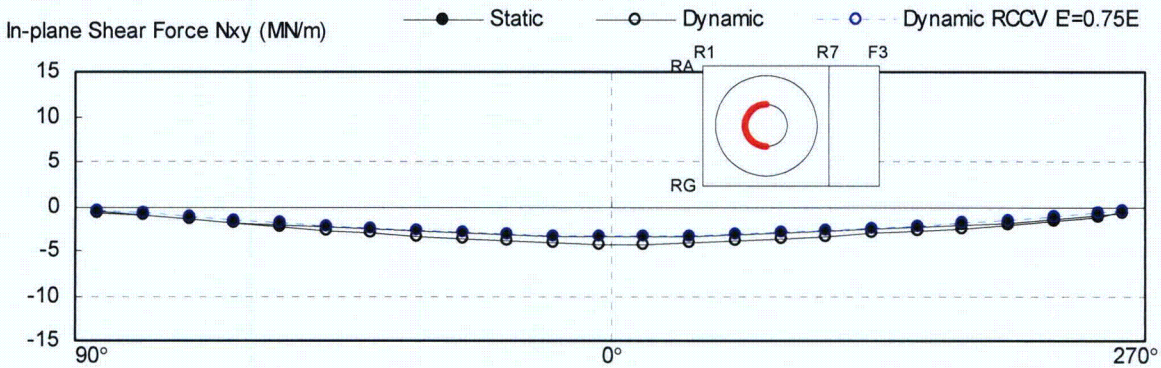

(b) Pedestal Bottom

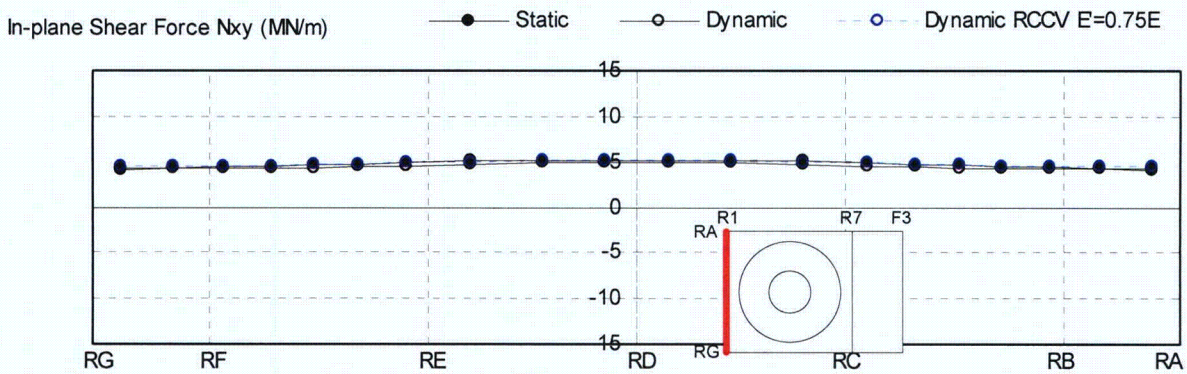

(c) Outer Wall on R1 Bottom

Figure 3.8-18(3) Comparison of In-plane Shear Forces, Nxy, in Y direction SSE Input

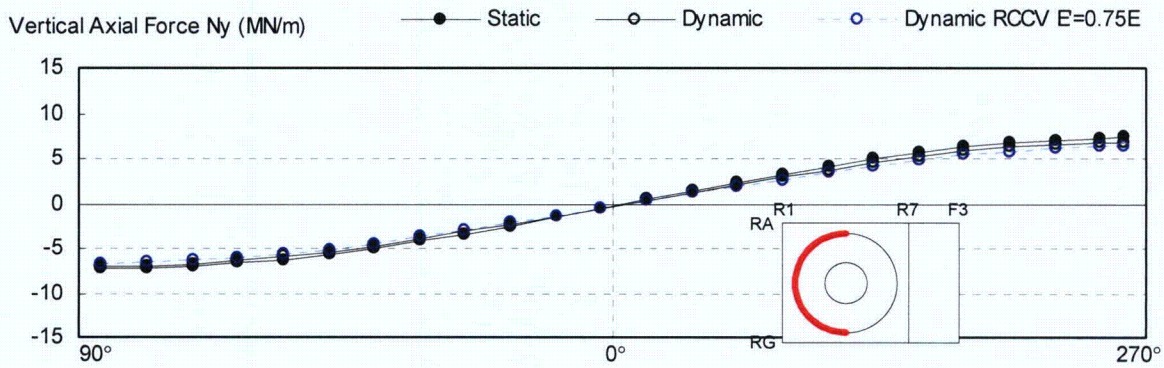

(a) Cylindrical Wall below RCCV Bottom

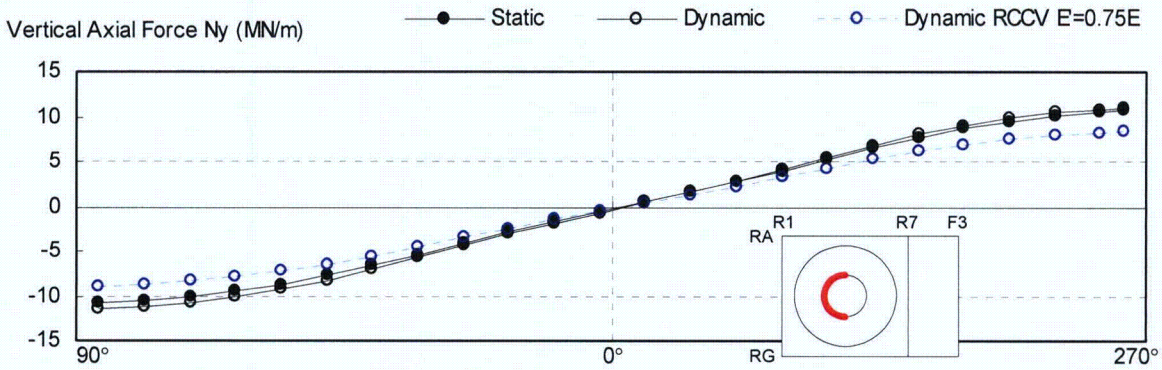

(b) Pedestal Bottom

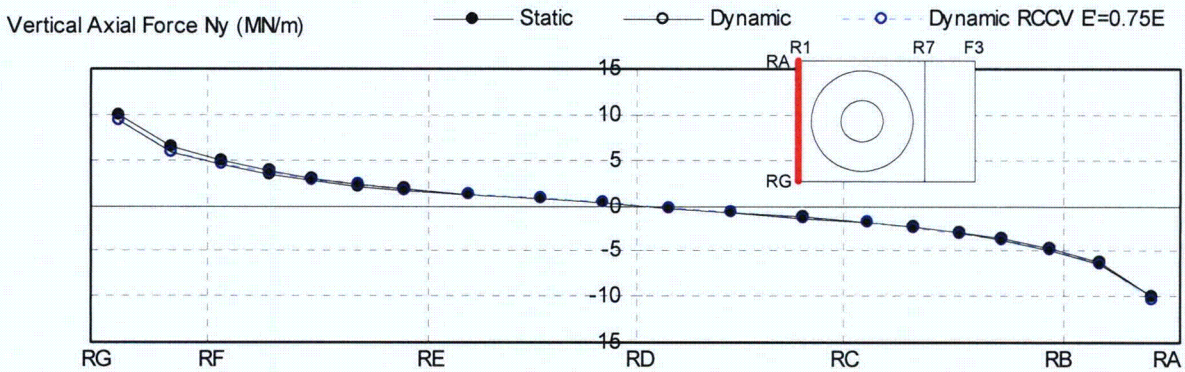

(c) Outer Wall on R1 Bottom

Figure 3.8-18(4) Comparison of Vertical Axial Forces, Ny, in Y direction SSE Input

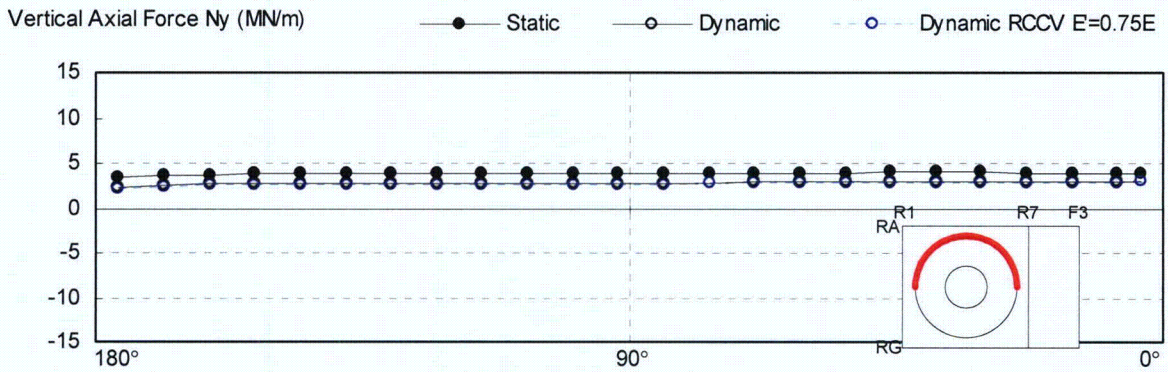

(a) Cylindrical Wall below RCCV Bottom

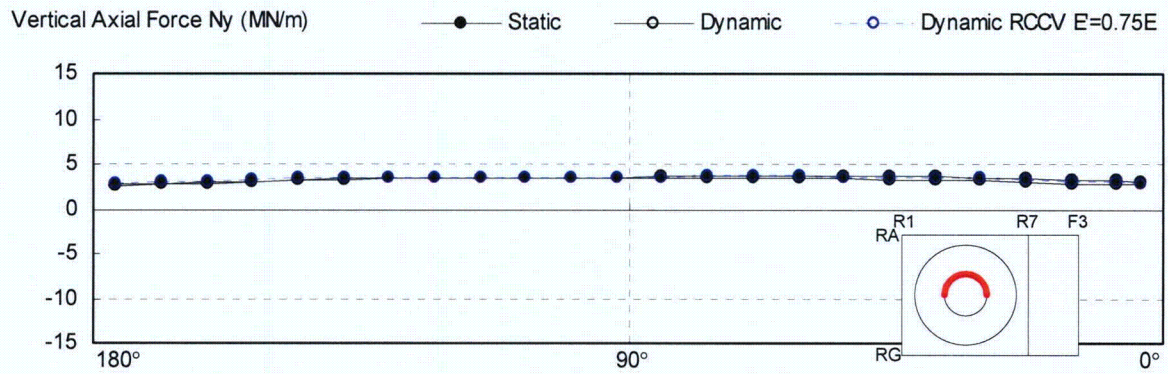

(b) Pedestal Bottom

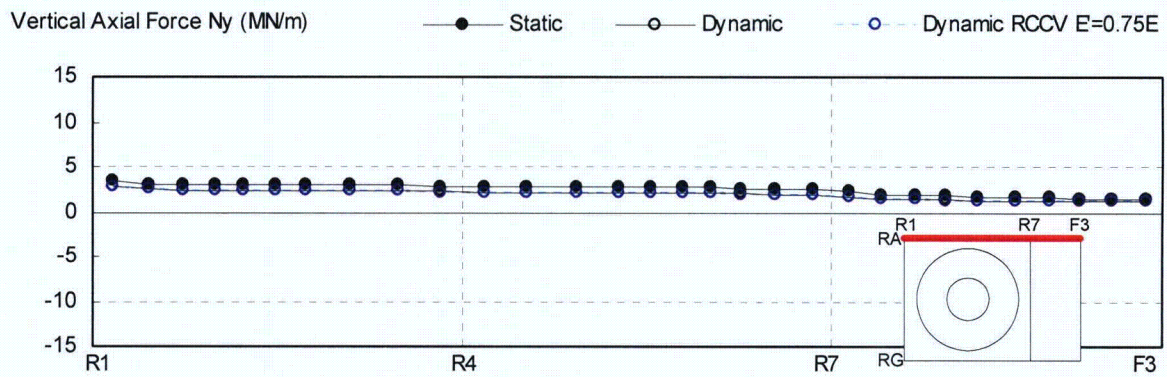

(c) Outer Wall on RA and FA Bottom

Figure 3.8-18(5) Comparison of Vertical Axial Forces, Ny, in Z direction SSE Input

NRC RAI 3.8-20

Based on the information contained in App. 3G.1.5.2.1.13, it is not clear how seismic member forces for each section are obtained for use in design. If the figures provided in app. 3G are used (i.e., plots of shear, moment, and torsion for the entire "stick model" building versus elevation), rather than individual member forces obtained directly from the NASTRAN model, then explain how the individual member forces (for use in design) are derived. (DCD Section 3.8.1.4.1 and Appendix 3G)

In addition, (1) identify the applicable detailed report/calculation (number, title, revision and date, and brief description of content) that will be available for audit by the staff, and (2) reference this report/calculation in the DCD.

GE Response

Seismic loads used for the structural design are obtained from seismic soil-structure interaction (SSI) analyses using a lumped mass-stick model, as described in DCD Appendix 3A.7. Design seismic loads, which are shown in DCD Figures 3G.1-24 through 26 and Table 3G.1-9, are established from the envelopes of all analysis results from SSI cases, as described in DCD Appendix 3A.9.

Seismic member forces for each section are obtained from the NASTRAN analyses for the design seismic loads mentioned above.

Seismic loads consist of four components, i.e., shear, moment, torsion, and vertical acceleration, as shown in DCD Figures 3G.1-24 through 26 and Table 3G.1-9. In the NASTRAN analyses, shear, moment, and torsion due to horizontal seismic loads are applied as nodal forces to the nodes at the connections of seismic walls and floor slabs so as to reproduce the distributions shown in Figures 3G.1-24 through 26. For vertical seismic loads, nodal forces corresponding to the accelerations shown in Table 3G.1-9 are applied to all nodes.

(1) The applicable detailed report/calculation that will be available for NRC audit is 26A6651, RB Structural Design Report, Revision 1, November 2005, containing the structural design details of the Reactor Building.

(2) Since this information exists as part of GE internal tracking system, it is not necessary to add it to the DCD submittal to the NRC.

Markups of DCD Appendix 3G.1.5.2.1.13 were provided in MFN 06-191.

NRC RAI 3.8-20, Supplement 1

NRC Assessment Following the December 14, 2006 Audit

Review the supplemental response to RAI 3.7-59 at the next audit. RAI 3.7-59 (stick model versus finite element model) is still open. GE to compare NASTRAN dynamic time history member forces versus NASTRAN static analysis using seismic stick model results to demonstrate that DCD approach is acceptable.

During the audit: this will be addressed under the review of RAI 3.7-59 (see end of this Summary Table) submitted by GE in their letter MFN 06-416, dated December 8, 2006.

GE Response

See NRC RAI 3.7-59 Supplement 1 for comparison of NASTRAN dynamic and static analysis results.

DCD Impact

No DCD change was required in response to this RAI Supplement.

NRC RAI 3.8-25

Describe how the analysis of a typical liner plate-to-RCCV attachment is performed using the NASTRAN model results. Include this information in DCD Section 3.8.1 and/or Appendix 3G.

In addition, (1) identify the applicable detailed report/calculation (number, title, revision and date, and brief description of content) that will be available for audit by the staff, and (2) reference this report/calculation in the DCD.

GE Response

Rigid bar elements connect the corresponding grid points of the liner elements and concrete elements as described in DCD Appendix 3G.1.4.1. They are schematically shown in Figure 3.8-25 (1). To represent the anchor, rigid bar elements are placed in the radial direction for the liners of the RCCV cylinder wall and the RPV pedestal. They are placed vertically for the basemat, the suppression pool slab, and the top slab.

Using this modeling technique, the design forces of liner plates are obtained from the analysis directly, and the anchorage design is performed in accordance with ACI 349-01 Appendix B.

(1) The applicable detailed report/calculation that will be available for NRC audit is 26A6651, RB Structural Design Report, Revision 1, November 2005, containing the structural design details of the Reactor Building.

(2) Since this information exists as part of GE internal tracking system, it is not necessary to add it to the DCD submittal to the NRC.

No DCD change was made in response to this RAI.

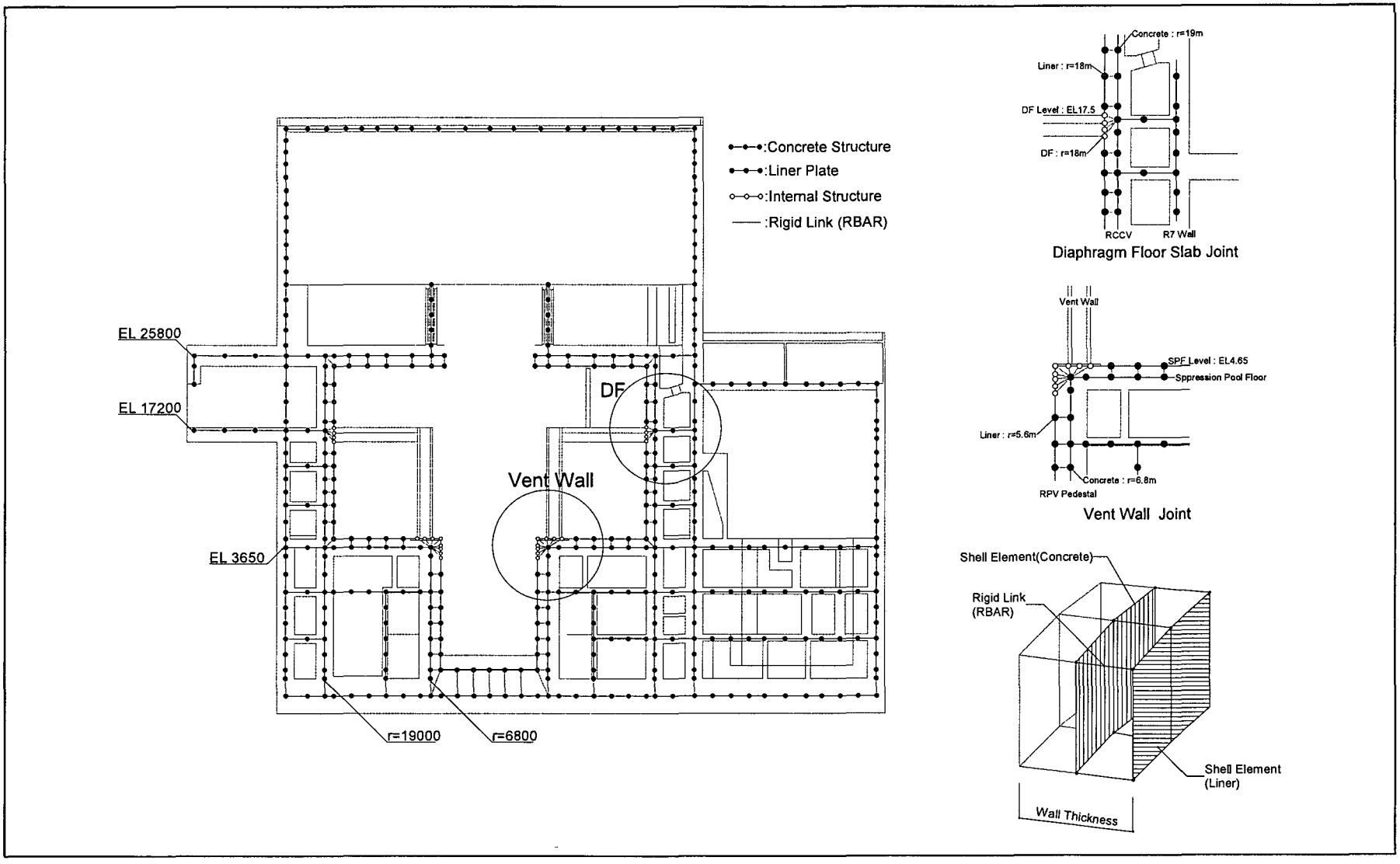

Figure 3.8-25 (1) Rigid Bar Elements between Concrete and Liner

NRC RAI 3.8-25 Supplements 1, 2 and 3

Further detailed review needed to fully understand the analysis study performed and to identify specific areas of the description, figures and tables (in the Supplement No. 2 response) which require further clarification. For example, the text indicates that Case 1 is provided to simulate the DCD design technique. However, the table provided for Case 1 - a and -b calls this model "Glued." The DCD and prior discussions with GE seem to indicate that the DCD model is not glued but free to deform between attachment points (rigid links). The concerns raised under this RAI are closely associated with RAI 3.8-26. Additional staff evaluation is also needed to understand the methodology used for analysis of the liner anchors.

During the audit, GE and NRC will need to have a detailed discussion and review - deferred to separate review

GE Response

"Glued" means all concrete and liner nodes are rigidly linked regardless of actual liner anchor locations. This is consistent with the DCD and prior discussions indicating that the DCD model is free to deform between attachment points (nodes).

In order to avoid confusion, the word "glued" used in the NRC RAI 3.8-25, Supplement 2 response is revised to read "DCD," as show in the following "FEM Analysis for Liner Plates" analysis:

DCD Impact

No DCD change was made in response to this RAI Supplement.

FEM ANALYSIS FOR LINER PLATES

1. SCOPE

This analysis provides justification for the adequacy of the modeling technique to correctly predict the behavior of the liner attached to the RCCV wall.

2. ANALYSIS CASES AND MODEL

Two models are provided to predict the behavior of the non-anchored region of the liner plate supported by its anchorage. The non-anchored portion of the plate is coupled to the concrete by rigid link elements or contact elements. The parameters for the analysis are shown on Table 3.8-25 (1).

2.1 Analysis cases

Analysis cases are shown in Table 3.8-25 (1). Case 1 is provided to simulate the DCD design technique and Case 2 permits the non-anchored region of the liner plate to move in any direction except for the RCCV wall direction.

Table 3.8-25(1) Analysis conditions

Case No.	Model	Coupling with Concrete	Load	Stiffness of Liner
1-a	DCD	Rigid Link	Pressure	E/10000
1-b			Thermal	E
2-a	Contact	Contact spring*1	Pressure	E/10000
2-b			Thermal	E

*1; depends on the function of NASTRAN

2.2 Model

The width of the model is twice the Liner anchor pitch (2 x 5.14 degrees) and the height is the half of width. Six degrees of freedom of nodes provided for liner are subordinations to these of RC wall. Figure 3.8-25 (2) shows the analysis models.

Coordinate System : Cylindrical, radius = 18m
Size : Liner plate = 6 mm
: Concrete wall thickness = 2 m
Boundary Conditions :
vertical edges : axi-symmetric condition
bottom : simple support [θ, z], but [r] is free
top : for Pressure Load: Same as bottom
: for Thermal Load: Rigid Link
Division : divide the width of Liner anchor pitch (5.14 degrees) into 4 elements

2.3. Material properties

Refer to Table 3.8-25 (1). The Young's Modulus is set to a very small value, i.e. 1/10,000 of the standard value, for pressure loads so that the liner resistance to pressure loads will be discounted. For thermal loads, the standard Young's Modulus value is used to account for the effect of differential thermal expansion between steel and concrete.

3. LOADS

Pressure and thermal loads are considered as shown bellow:

Pressure: 45 psig = 0.31 MPa (LOCA after 72 hr)
Thermal: Average temperatures to concrete wall and liner are assigned
Concrete = 20°C
Liner =170°C
Initial temperature = 15.5°C

4. RESULT

Figures 3.8-25 (3) and 3.8-25 (4) show the strains. The strains are the same for Case 1 and Case 2. Therefore the DCD modeling technique is acceptable.

Table 3.8-25(2) Material Properties

		Reinforced Concrete	Liner
		f'c=5000psi 34.5MPa	Carbon Steel
Young's Modulus (MPa)	Temperature	2.78×10^{4}	2.00×10^{5}
	Pressure	2.78×10^{4}	2.00×10^{1}
Poisson's Ratio		0.17	0.3
Thermal Expansion (m/m°C)		9.90×10^{-6}	1.17×10^{-5}

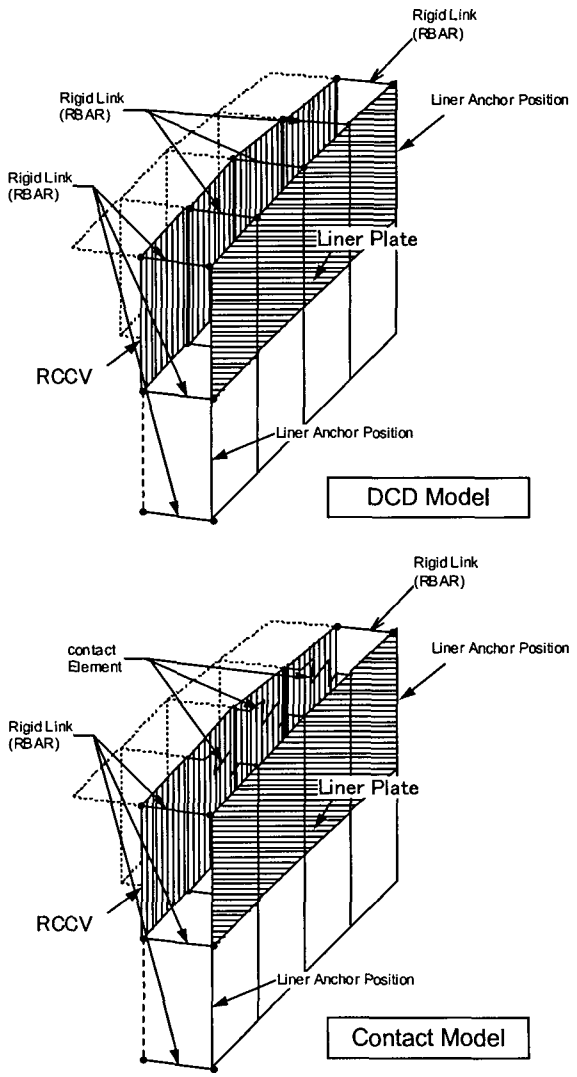

Figure 3.8-25 (2) Analysis Models

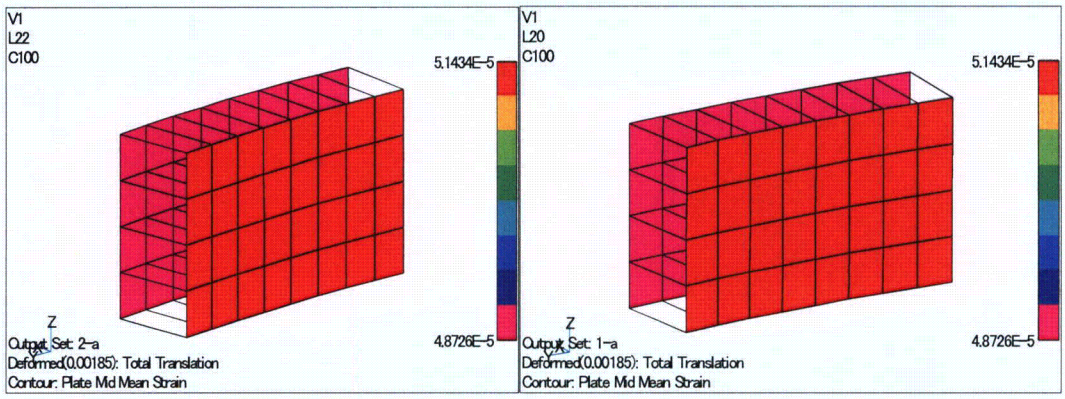

a) DCD Model **b) Contact Model**

Figure 3.8-25 (3) Liner Strains (Pressure)

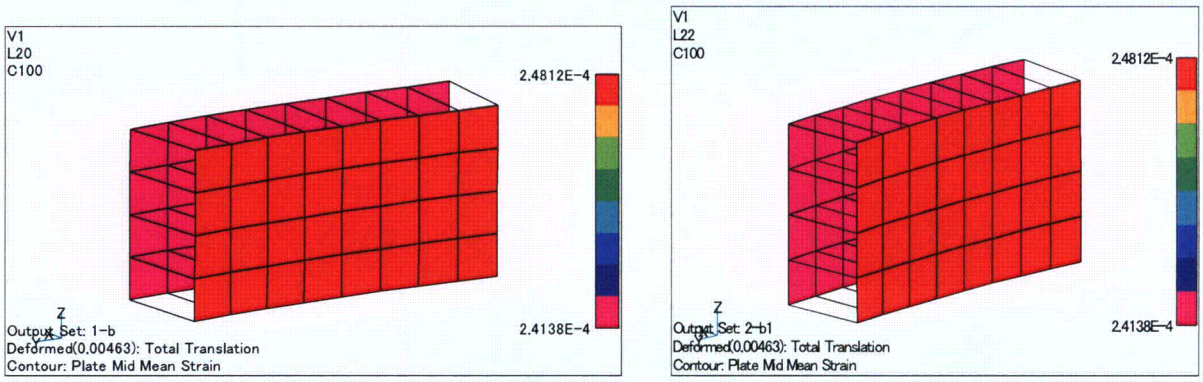

a) DCD Model **b) Contact Model**

Figure 3.8-25 (4) Liner Strains (Thermal)

NRC RAI 3.8-26

In the NASTRAN model, is the attachment of the liner plate to the RCCV modeled in a manner that is consistent with the physical attachment scheme? Please describe the method used to attach the liner plate to concrete in the NASTRAN model, compare it to the physical attachment scheme, and discuss the adequacy of the model to predict realistic strains in the liner plate. Include this information in DCD Section 3.8.1 and/or Appendix 3G.

In addition, (1) identify the applicable detailed report/calculation (number, title, revision and date, and brief description of content) that will be available for audit by the staff, and (2) reference this report/calculation in the DCD.

GE Response

Liner plates, as described in the response to RAI 3.8-25, are rigidly attached to the RCCV concrete in the NASTRAN model. This modeling approach is adequate to predict overall liner strains since liners deform in conformance with the concrete, even though liner plates are physically anchored at discrete locations only. Relative movement between liner and concrete will be considered for liner anchor evaluation in the detailed design phase in accordance with the procedures outlined below.

- Displacement Evaluation of Liner Anchor

  The displacement of liner anchor is evaluated for the case that one section of liner plate between the liner anchor and adjacent one buckles. Once the buckling is occurred, the balance of the liner plate forces due to strains of the both sides of liner anchor is disrupted. The liner anchor would strain to balance forces from both sides. The liner plate strains from the integral NASTRAN model and liner anchor load-displacement relationship based on the available test results of similar anchors are used to evaluate the displacement. The evaluation is performed to meet the acceptance criteria in ASME B&PV Code Section III, Division 2, Table CC-3730-1, using the same methodology as Bechtel Topical Report BC-TOP-1, Containment Building Liner Plate Design Report, Revision 1, December 1972.

- Embedment Evaluation of Liner Anchor

  A negative pressure acts on the liner plate in the wetwell portion when hydrodynamic load, such as SRV, CO, CH and combination of them occurs in the suppression pool. Such negative pressure produces a reaction force on the liner anchors embedded in the concrete of RCCV wall. Concrete and liner anchor steel portion are evaluated based on ACI 349-01.

  Embedded portion is evaluated for concrete cone shear resistance and bearing on anchor. For the steel portion of anchor, flange bending stress and web tension

stress are evaluated. The evaluation results are compared with ASME B&PV Code Sec. III, Division 2, Table CC-3730-1.

No DCD change was made in response to this RAI.

NRC RAI 3.8-26, Supplement 1

NRC Assessment Following the December 14, 2006 Audit

This issue is covered by RAI 3.8-25 above. See RAI 3.8-25 for resolution.

GE Response

See response to NRC RAI 3.8-25.

DCD Impact

No DCD change was made in response to this RAI Supplement.

NRC RAI 3.8-27

Provide the details of the locally thickened liner plate and additional anchorage at major structural attachments. Was this modeled in the NASTRAN analyses? If not, discuss the basis for not including it. Include this information in DCD Section 3.8.1 and/or Appendix 3G.

In addition, (1) identify the applicable detailed report/calculation (number, title, revision and date, and brief description of content) that will be available for audit by the staff, and (2) reference this report/calculation in the DCD.

GE Response

See DCD Figure 3G.1-48 for thickened liner plates at the diaphragm floor (38 mm) and with pedestal (50 mm). They are modeled in NASTRAN using shell elements with the corresponding thicknesses specified. Analysis results are shown in DCD Table 3G.1-35. Regarding anchorage for them, anchorage itself is not modeled, however, the reaction forces are evaluated and the results are shown in DCD Tables 3G.1-38, 3G.1-40 and 3G.1-42.

The thickened liner plates are modeled by shell elements, so the thicknesses are input directly as NASTRAN data.

(1) The applicable detailed report/calculation that will be available for NRC audit is DC-OG-0052, Structural Design Report for Containment Metal components, Revision 1, September 2005, containing evaluation method and results for structural integrity of containment liner and drywell head.

(2) Since this information exists as part of GE internal tracking system, it is not necessary to add it to the DCD submittal to the NRC.

Markups of DCD Section 3G.1.4.1 were provided in MFN 06-191.

NRC RAI 3.8-27, Supplement 1

Additional discussed topics at audit

a) *Address the design of anchorage at the penetrations and discuss the process to be used for design.*

b) *Provide a sketch of the RPV stabilizer.*

GE Response

a) Regarding piping penetrations, the anchoring to the containment wall is constructed by means of two circular flange plates, one outside and the other inside the wall, and several gusset plates (between four and twelve on each side, depending of the penetration size) which are perimeter welded to the flange plate and the sleeve (or directly to the process pipe in cold penetrations). The gusset plates are embedded in the wall. A typical detail for hot penetrations showing the configuration of the anchorage is shown in the Figure 3.8-27 (1).

   The process to be used for the design of penetration anchors is to evaluate the stress state on each component by means of a local 3-D finite element model of the penetration and to verify that the stress results are below the allowable stress limits specified by the applicable ASME Sections (NB-3220, NC-3217, NE-3220 and CC-3421.9).

No DCD change was made in response to this RAI.

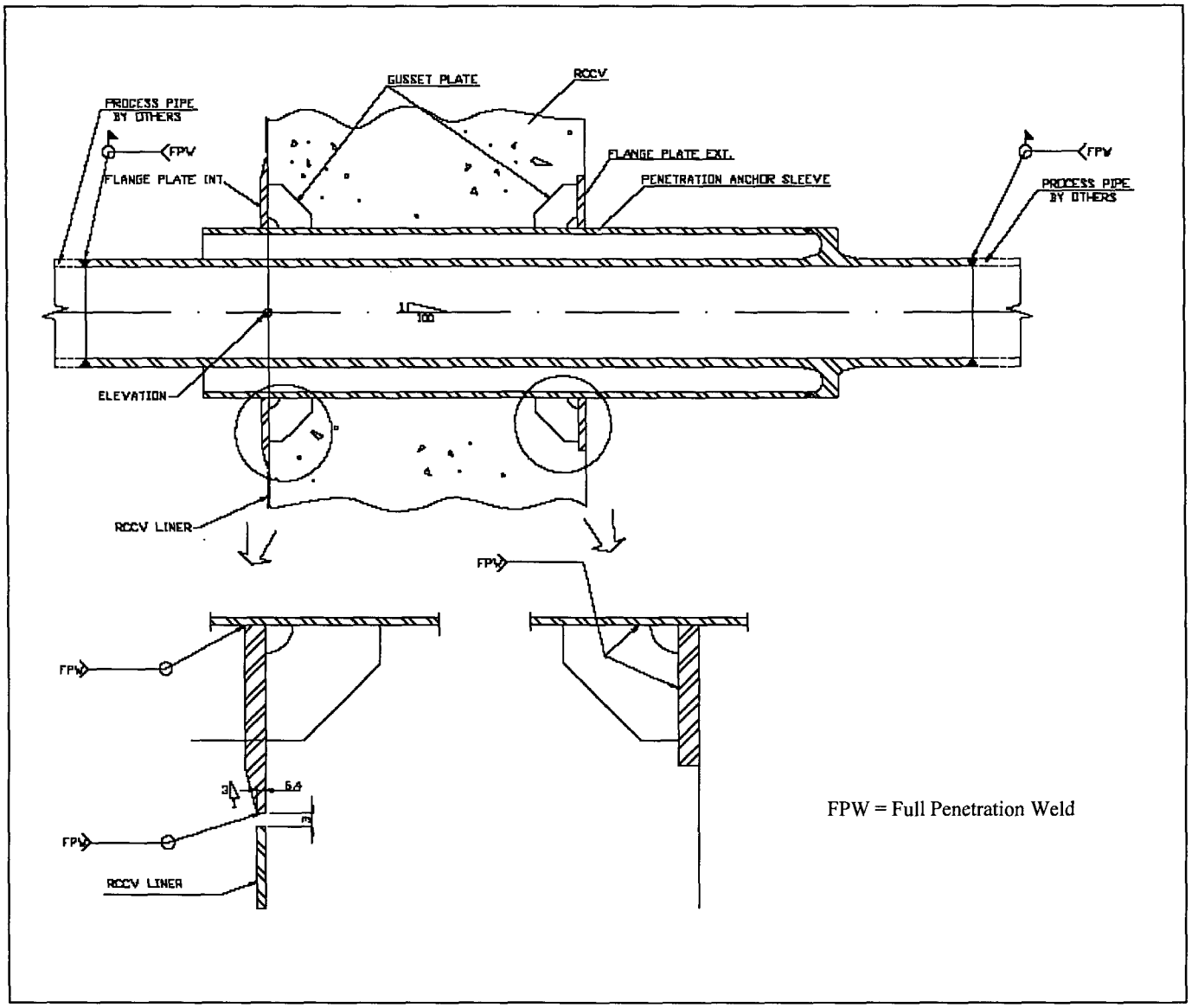

Figure 3.8-27 (1)

b) Refer to Figure 3.8-27 (2) for details of the RPV Stabilizer concept to be used in eight places in the ESBWR.

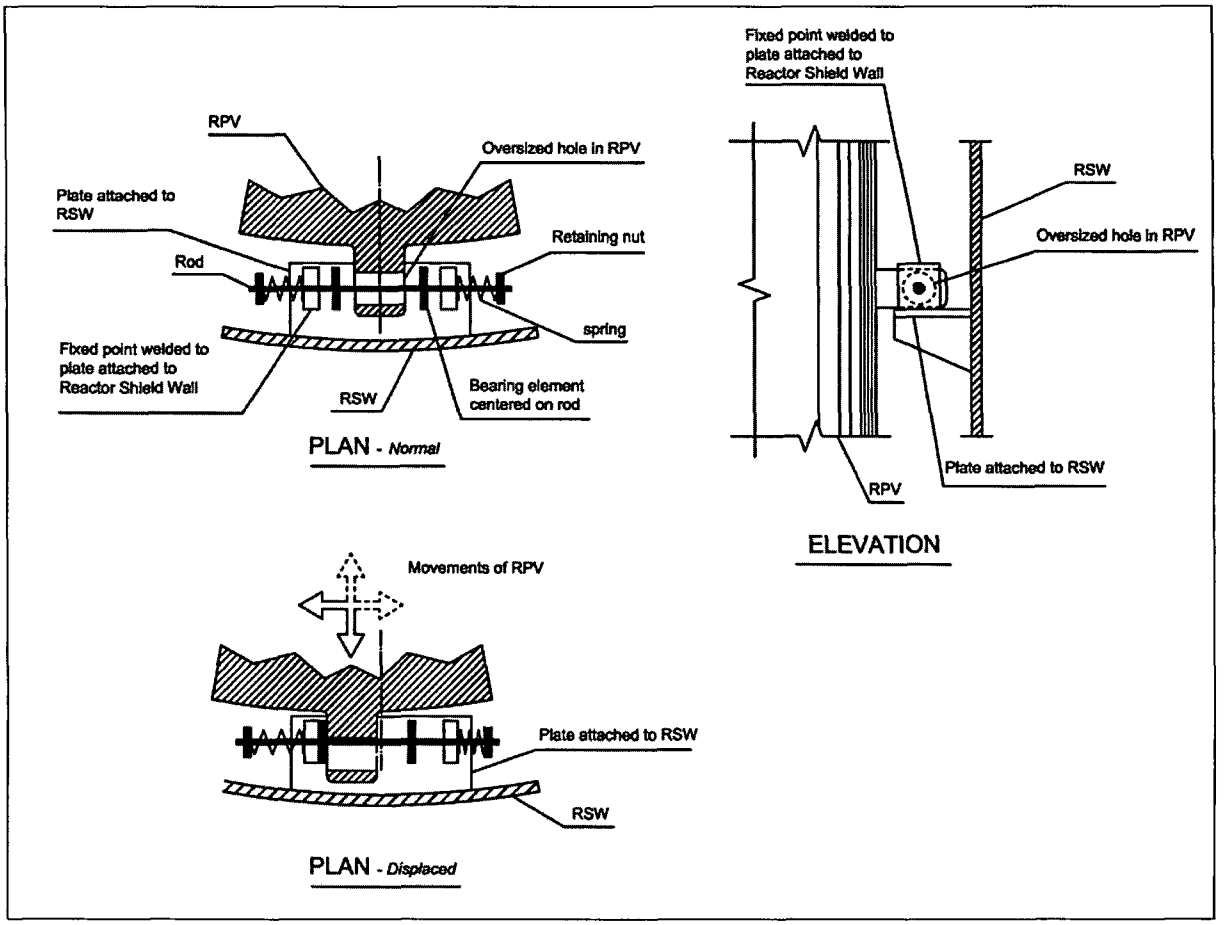

Figure 3.8-27 (2)

NRC RAI 3.8-27, Supplement 2

NRC Assessment Following the December 14, 2006 Audit

a) Acceptable (the analysis & design is addressed separately under RAI 3.8-17). b) From Fig. 3.8-27(2), the RPV stabilizer attachment to the SW does not appear to provide free radial movement, and it is not obvious how it provides lateral (i.e., tangential direction) restraint, since springs and gaps are provided for tangential movement. Please explain. Also, include the descriptions and sketches/details provided with the RAI response for both items in the DCD.

During the audit, GE will provide a draft supplemental response and revised detail for the RPV stabilizer to address the above concerns. Also, the DCD will be revised to provide a description of the RPV stabilizer to capture the information presented in the RAI response. Revised sketch showing the RPV stabilizer which provides tangential restraint while allowing free radial and vertical movement is acceptable. A description of the RPV stabilizer which captures this information for inclusion in the DCD is still needed.

GE Response

There are eight Reactor Pressure Vessel (RPV) Stabilizers that are equally spaced around the circumference of the RPV and attached to the Reactor Shield Wall (RSW). The Stabilizer, shown in Figure 3.8-27(3), allows for free thermal radial and vertical growth of the RPV through an oversized hole in an integral lug attached to the RPV. The lug, while free to move radially and vertically, is restrained tangentially by end plates welded to a bracket attached to the RSW. There are springs on either side of the lug connected by rods through the oversized hole that engage the yoke end. Under design loading, the RPV lugs will move laterally and transfer loads to the bearing plates of the Stabilizers. Since the Stabilizers are located at eight locations, several of the Stabilizers will engage during this lateral motion. An adequate minimum gap between the RPV lug and RPV stabilizer bearing elements is provided during the construction phase for proper alignment.

The seismic analysis of the RB/FB complex Stick model includes a lateral directional spring stiffness for the entire stabilizer assembly between the RSW and the RPV.

DCD Impact

DCD Tier 2 Section 3.9.1.4 will be revised in the next update as noted in the attached markup.

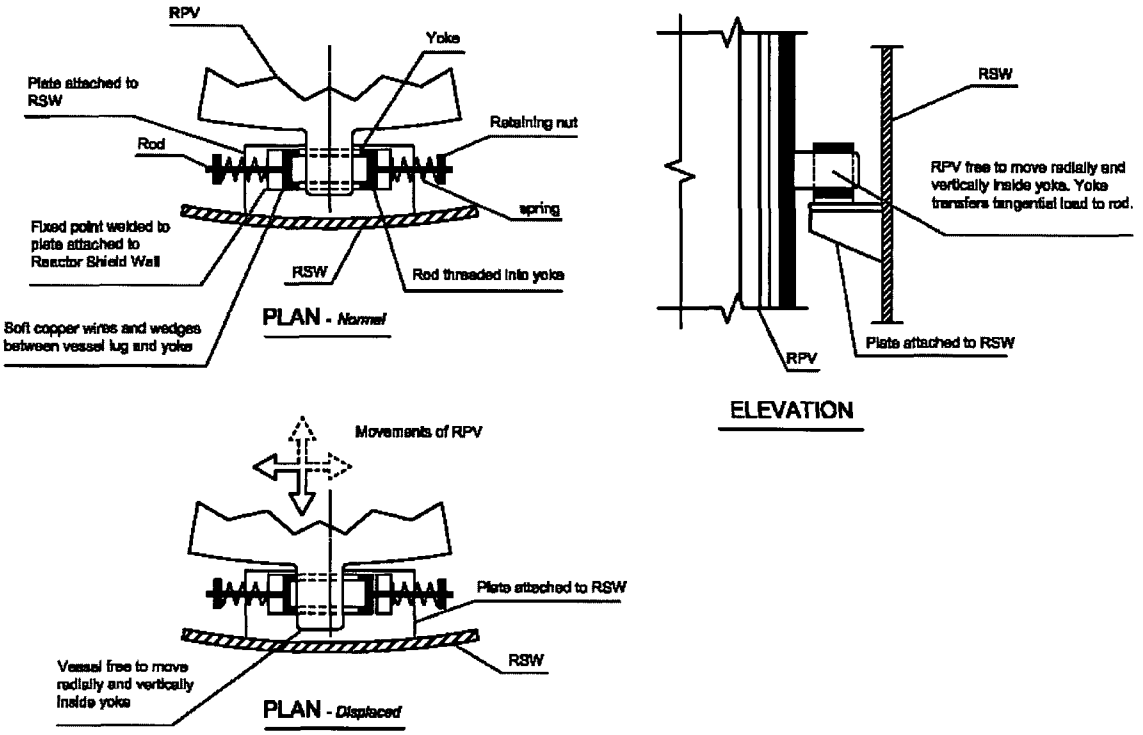

Figure 3.8-27 (3)

NRC RAI 3.8-41

DCD Sections 3.8.3.1.1 and 3.8.3.1.4 indicate that the diaphragm floor (DF) and vent wall (VW) are constructed from steel plates filled with concrete. Section 3G.1.4.1 of Appendix 3G indicates that the infill concrete is conservatively neglected in the analysis model. Neglecting the mass and stiffness of the concrete may not be conservative. Therefore, provide more information which explains how the infill concrete is considered in the analysis and design of these structures. Describe how the mass, stiffness, and strength are considered when analyzing the DF and VW structures for each applicable loading condition. For analysis of thermal transients, how was the infill concrete modeled in heat transfer analyses, and how was the constraint to thermal growth/contraction of the steel plates considered in the thermal stress analyses?

Include this information in DCD Section 3.8.3 and/or Appendix 3G. In addition, (1) identify the applicable detailed report/calculation (number, title, revision and date, and brief description of content) that will be available for audit by the staff, and (2) reference this report/calculation in the DCD.

GE Response

Concrete strength and stiffness are conservatively neglected in both the structural analysis model and the seismic analysis model. The mass of concrete is considered in the seismic analysis model and in the structural analysis model.

For the linear thermal analysis, concrete strength and stiffness are neglected and thus the constraint to thermal expansion or contraction of the steel plates from the infill concrete is not considered. However, for the non linear analyses, the infill concrete in VW and DF is explicitly included as brick elements with strain compatibility between the steel and concrete interfaces and using the respective values for the coefficient of thermal expansion for concrete and steel. This modeling includes the effect of the constraint to thermal expansion or contraction to both the concrete and steel components. Note that concrete cracking is also included, and this would relieve some of the thermal induced stress. The effect of this infill concrete on thermal constraint from the nonlinear model is then transferred to the linear thermal-stress design model through scaling via thermal ratios. Concrete cracking effects due to thermal loads are obtained by a nonlinear, concrete cracking analysis using ABAQUS/ANACAP program as described in DCD Appendix 3C.

Thermal transients in the heat transfer analysis done to determine temperature distribution, the heat transfer coefficient of concrete is neglected in the DF and WW for the linear analysis but concrete is included in the non-linear model. Through the use of the thermal ratios to account for the thermal stresses, the effect of infill concrete on the heat transfer is implicitly addressed in the linear analysis.

Therefore, for the non-thermal and non-seismic loads, neglecting the strength of the infill concrete in the design of the VW and DF structures is conservative, because the steel sections must then resist all these type of loads (under the bending of the VW or DF, the concrete could resist significant load in compression, if not neglected). For seismic load, neglecting the strength and stiffness of the concrete but including the mass is

conservative because the mass can add significant dynamic load without the benefit of any stiffness or strength to resist this load. For the thermal loads, the stiffness, strength, and associated constraint due to thermal expansion or contraction of the infill concrete is included in the nonlinear modeling. In addition, concrete cracking due to thermal induced stress and the associated reduction and redistribution of thermal load is also included. The effect of concrete expansion or contraction and cracking of the infill concrete in the steel composite structures (VW, DF) associated with thermal loads is incorporated into the design through the use of thermal ratios that scale results of the design basis model that use linear thermal stress analysis neglecting the infill concrete.

(1) The applicable detailed report/calculation that will be available for NRC audit is 26A6625, Cracking Analysis of Containment Structure for DBA Thermal Loads, Revision 1, October 2005. This report documents the non-linear analyses for the thermal loads taking into account of concrete cracking and the redistribution of section forces due to concrete cracking.

(2) Since this information exists as part of GE internal tracking system, it is not necessary to add it to the DCD submittal to the NRC.

No DCD change was made in response to this RAI.

NRC RAI 3.8-41, Supplement 1

Additional topics discussed at audit

None.

GE Response

None.

No DCD change was made in response to this RAI Supplement.

NRC RAI 3.8-41, Supplement 2

GE Additional Post Audit Action

Since concrete properties were not used in the stick model for the VW and DF, indicate what is the effect on frequency shift when considering concrete, even if cracked, in the spectrum curves generated for equipment and piping design.

GE Response

To address the effect of in-fill concrete on the frequency shift for the VW and DF, the stiffness properties of the two structures in the seismic model were adjusted to include contribution of concrete stiffness. Since the in-fill concrete is unreinforced, it would likely to crack under SSE. An effective concrete stiffness equal to 50% of the nominal uncracked stiffness was thus assumed. The resulting fundamental frequency was found to be 113% higher for the VW and 26% higher for the DF than that of the base model without consideration of the in-fill concrete stiffness. (See Table 3.8-41 (1))

The effect of frequency shift on the floor response spectra was evaluated by additional parametric SSI analysis for generic uniform sites with single envelope ground motion input. The results were compared with the enveloping results obtained from Report SER-ESB-033, *Parametric Evaluation of Effects on SSI Response, Rev. 0,* submitted to NRC as Enclosure 2 to MFN 06-274. As shown in Figs. 3.8-41 (1) through 3.8-41 (25) for spectra comparison at selected locations, the existing site-envelope spectra without the in-fill concrete stiffness consideration do not completely bound. (In these figures, U-3 means the case without concrete stiffness (base model), and U-5 means with 50% concrete stiffness.) In view of this comparison, the results of the in-fill concrete stiffness parametric evaluation will be included in the site-envelope seismic design loads.

It should be noted that additional parametric seismic analysis is being performed to address the effect of containment LOCA flooding (see response to RAI 3.8-8) and the effect of updated modeling properties of containment internal structures for more consistency with the design configuration.

Final seismic loads will be documented in next update of DCD Appendix 3A.

Markups of DCD Tier 2 Appendix 3A were provided in MFN 06-191.

Table 3.8-41 (1) Effect of concrete rigidity for natural frequencies for VW and DF

Structure		Modulus of elasticity of concrete	
		0% (E=0MPa)	50% (E=13900MPa)
Vent Wall	Frequency (Hz)	21.6	46.0
	Ratio	1	2.13
Diaphragm Floor	Frequency (Hz)	13.5	17.0
	Ratio	1	1.26

Material properties:

(1) Concrete
Modulus of elasticity: E=13900MPa (50%)
Poison's ratio : ν=0.17

(2) Steel
Modulus of elasticity: E=200000MPa
Poison's ratio : ν=0.3

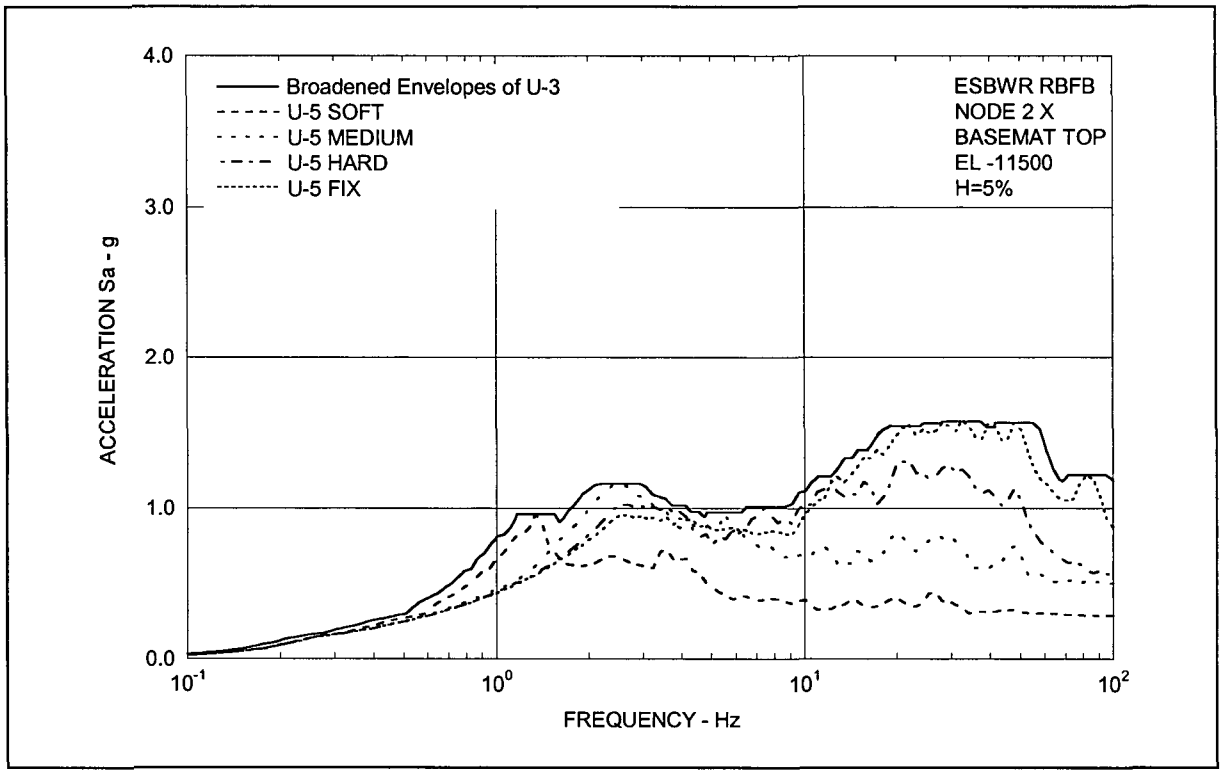

Figure 3.8-41 (1) Floor Response Spectra - RBFB Basemat X

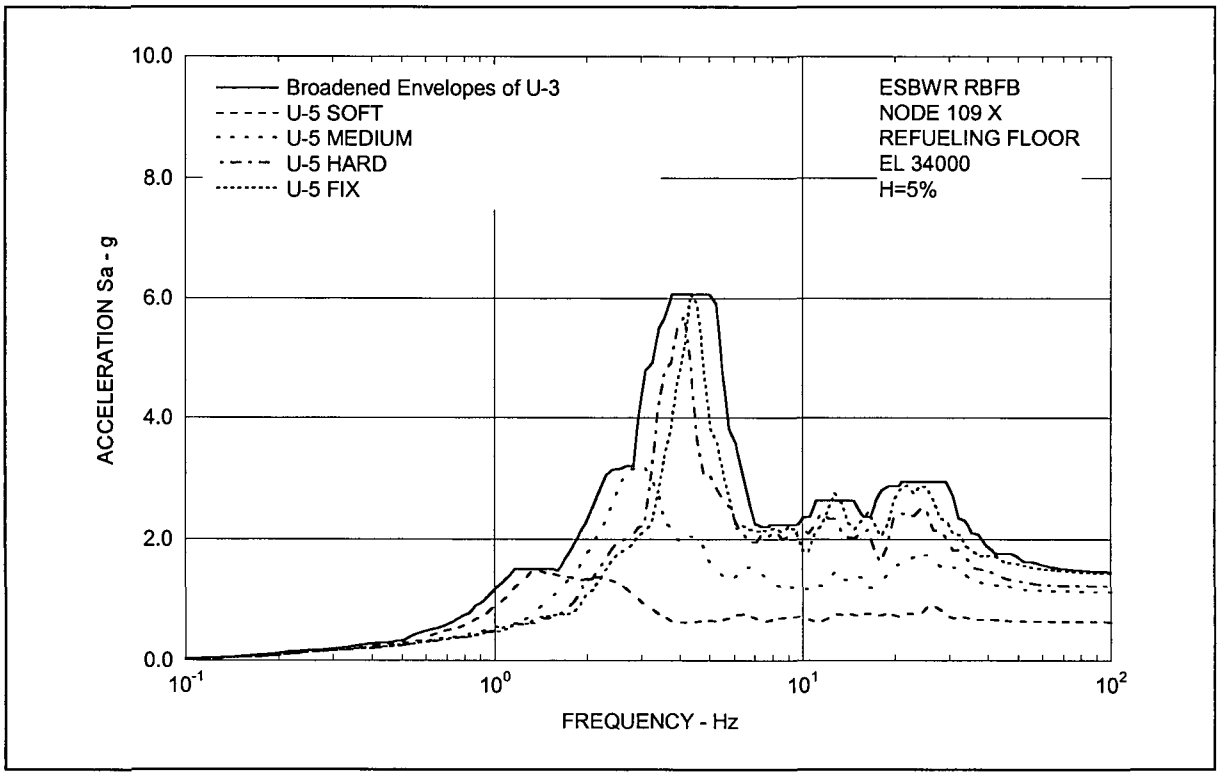

Figure 3.8-41 (2) Floor Response Spectra - RBFB Refueling Floor X

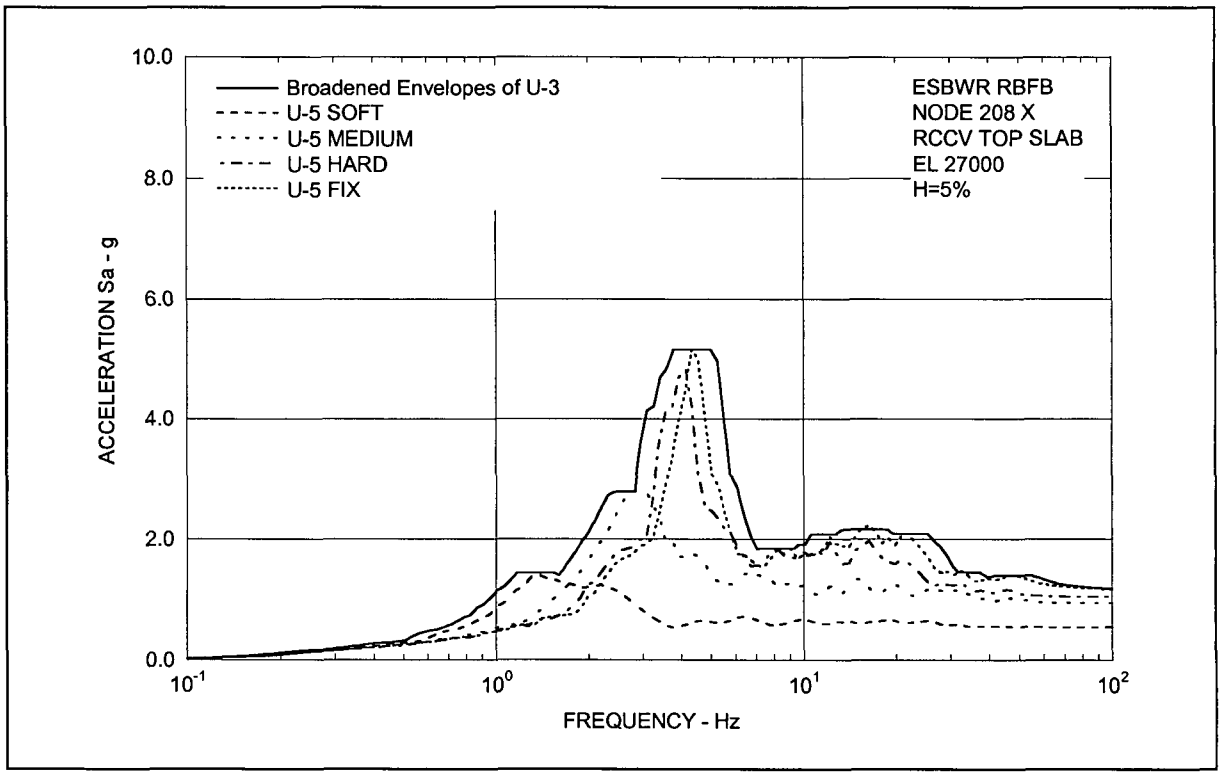

Figure 3.8-41 (3) Floor Response Spectra - RCCV Top Slab X

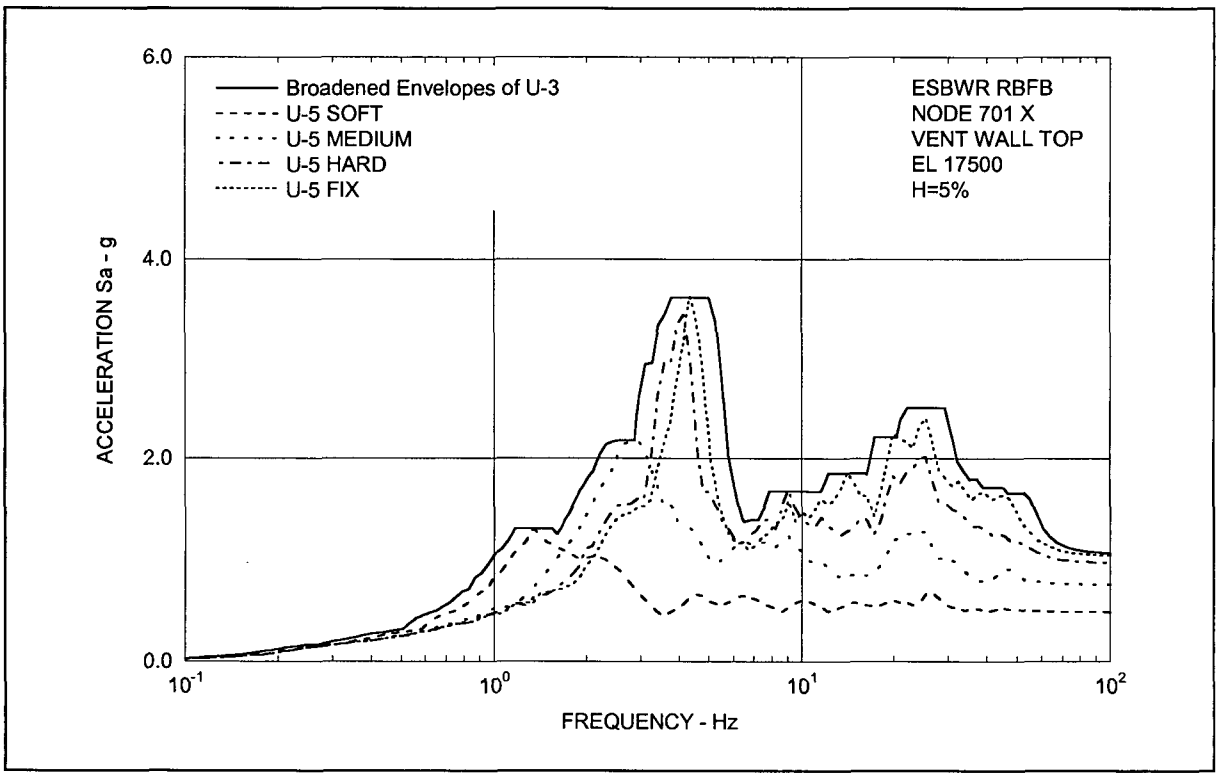

Figure 3.8-41 (4) Floor Response Spectra - Vent Wall Top X

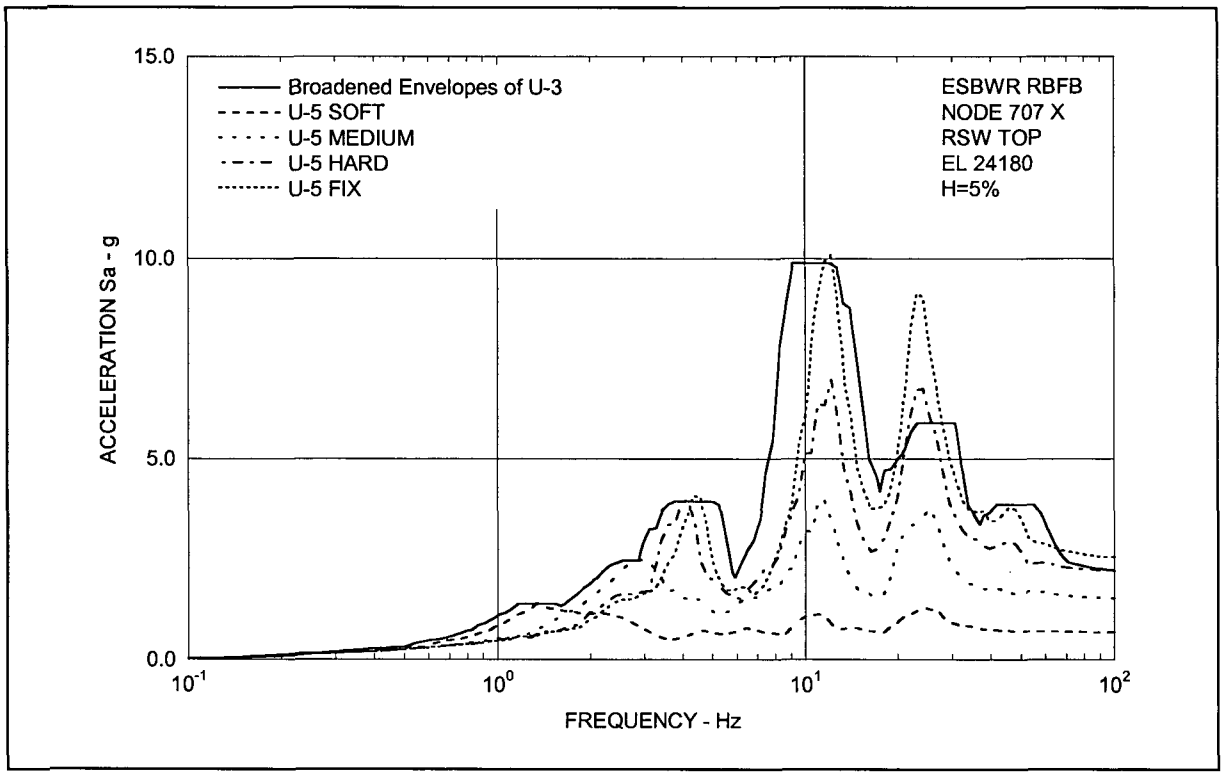

Figure 3.8-41 (5) Floor Response Spectra - RSW Top X

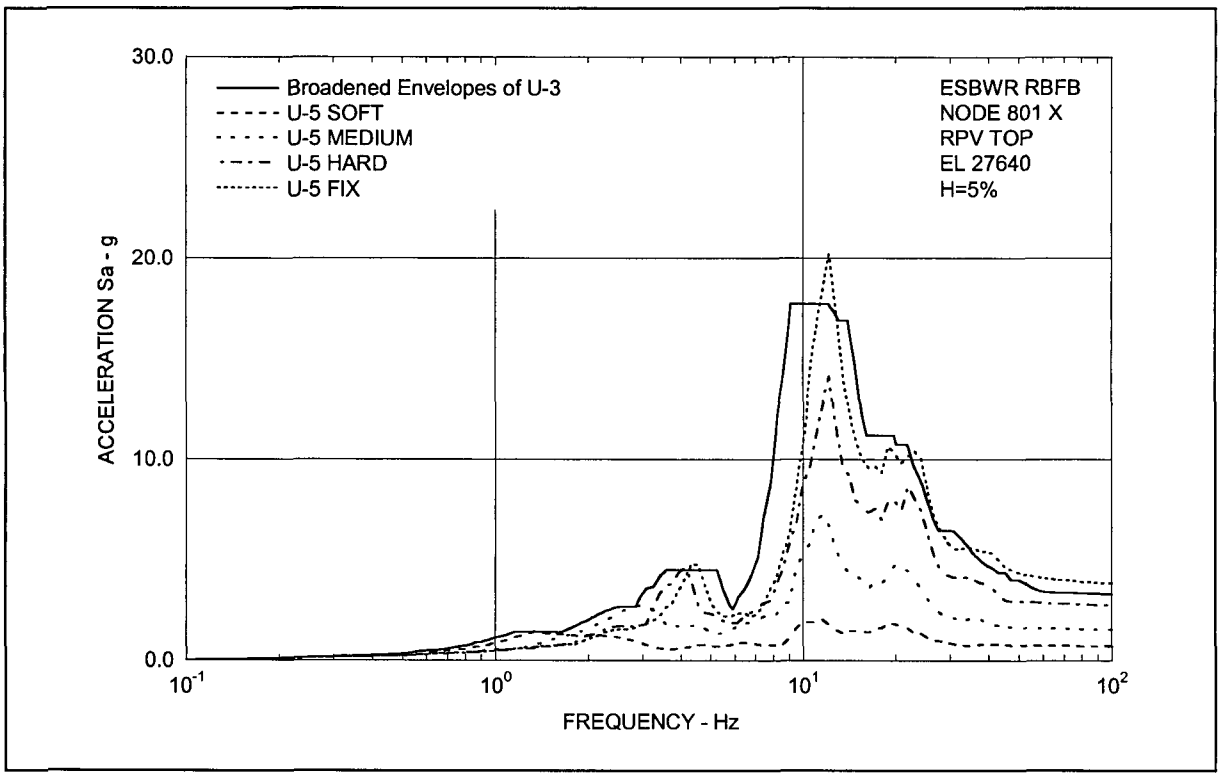

Figure 3.8-41 (6) Floor Response Spectra - RPV Top X

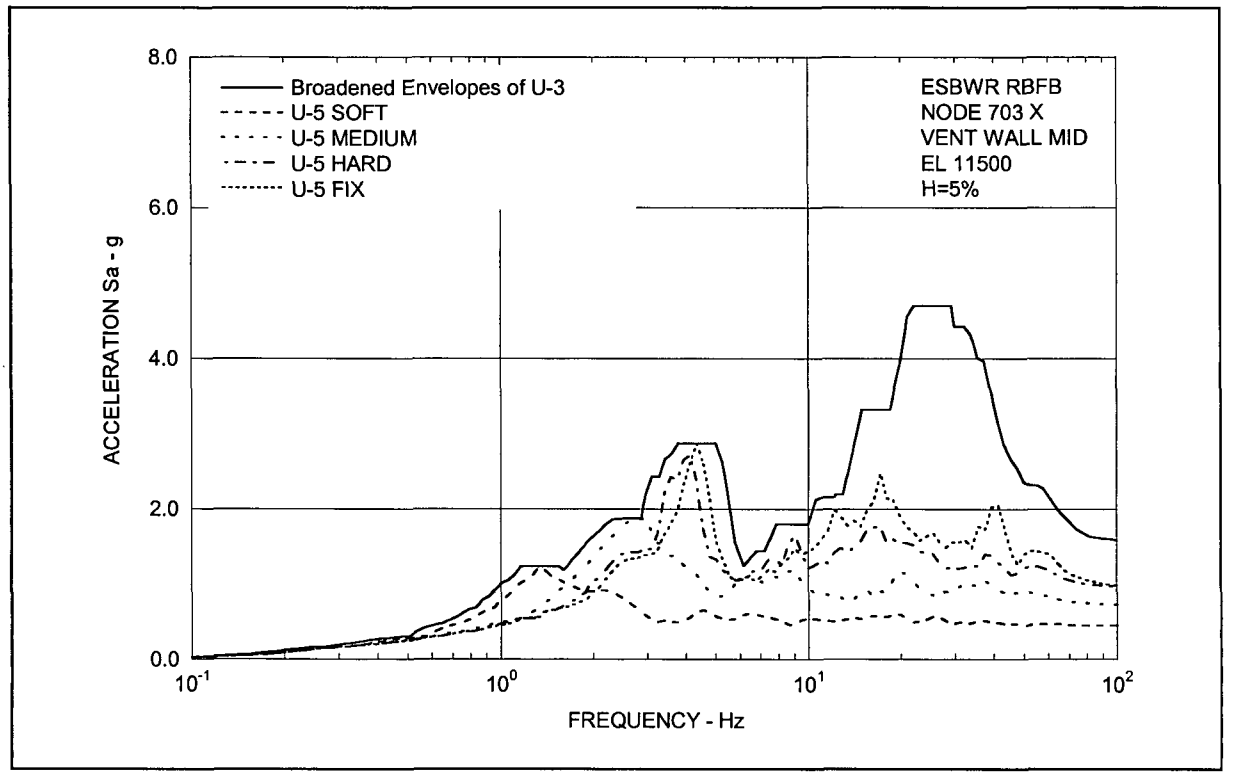

Figure 3.8-41 (7) Floor Response Spectra - Vent Wall Middle X

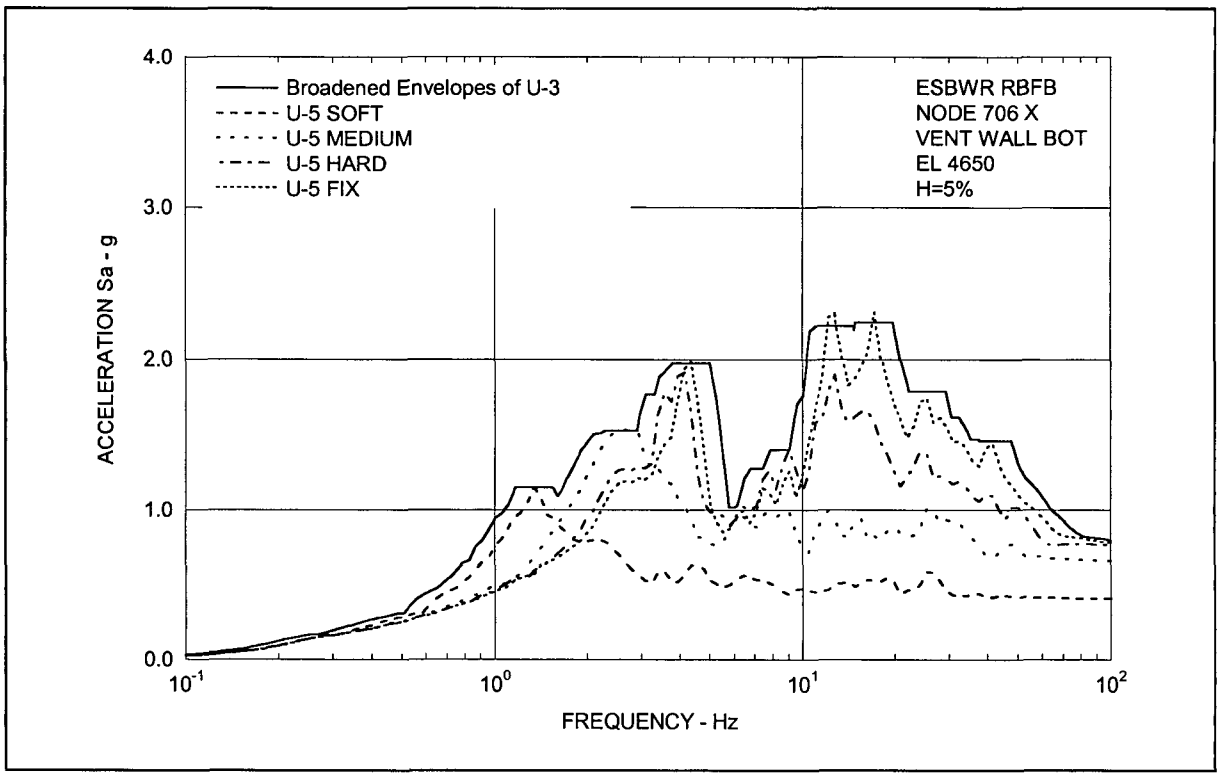

Figure 3.8-41 (8) Floor Response Spectra - Vent Wall Bottom X

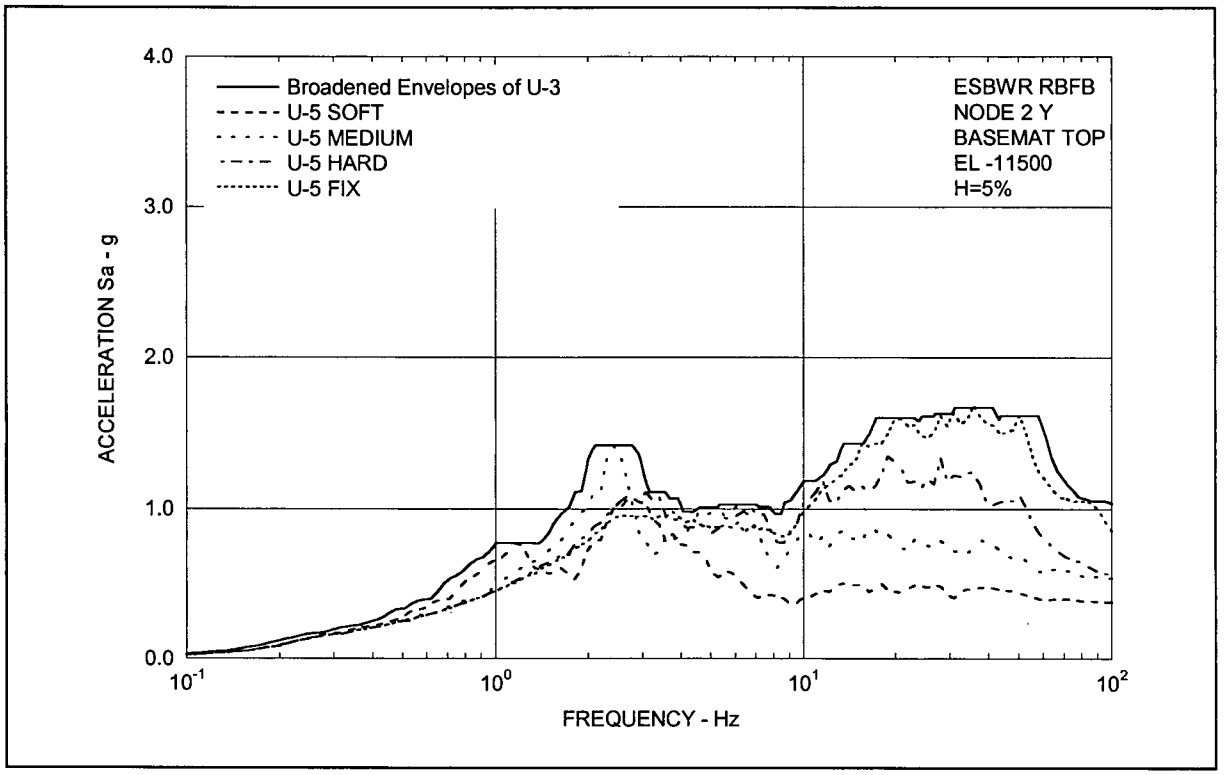

Figure 3.8-41 (9) Floor Response Spectra - RBFB Basemat Y

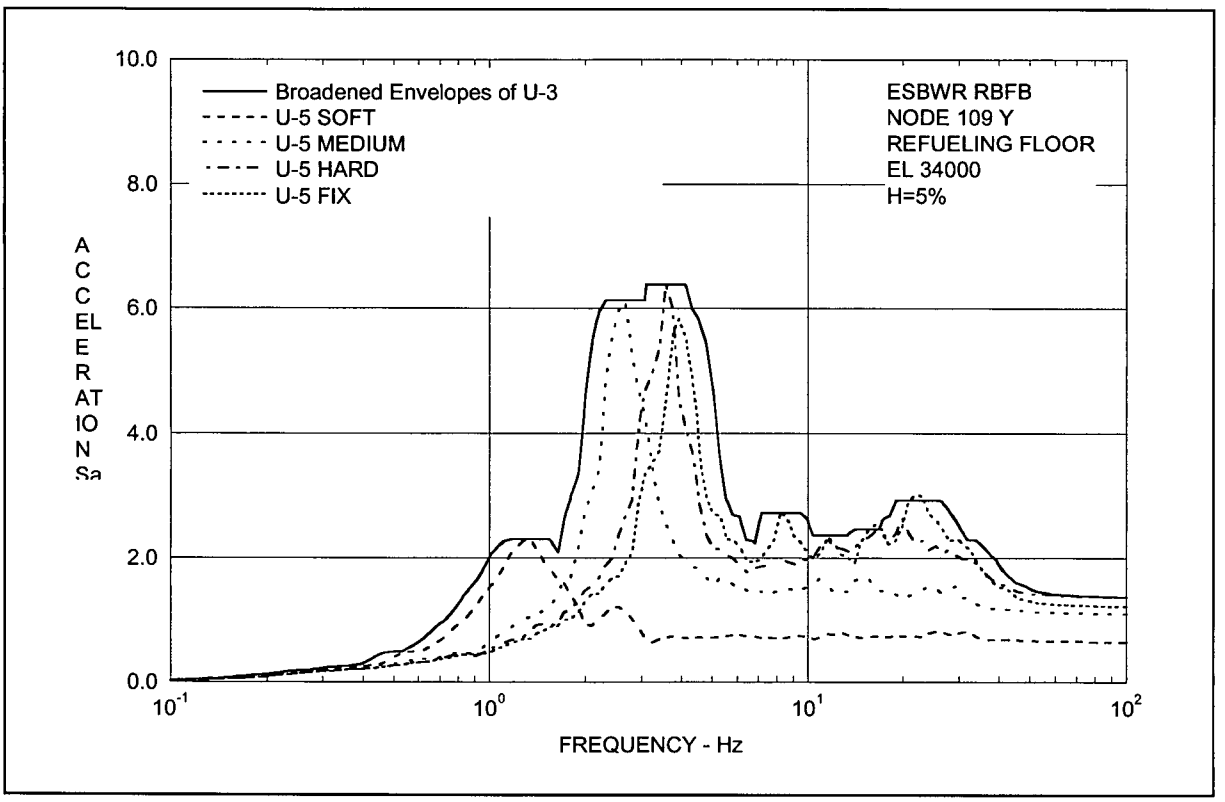

Figure 3.8-41 (10) Floor Response Spectra - RBFB Refueling Floor Y

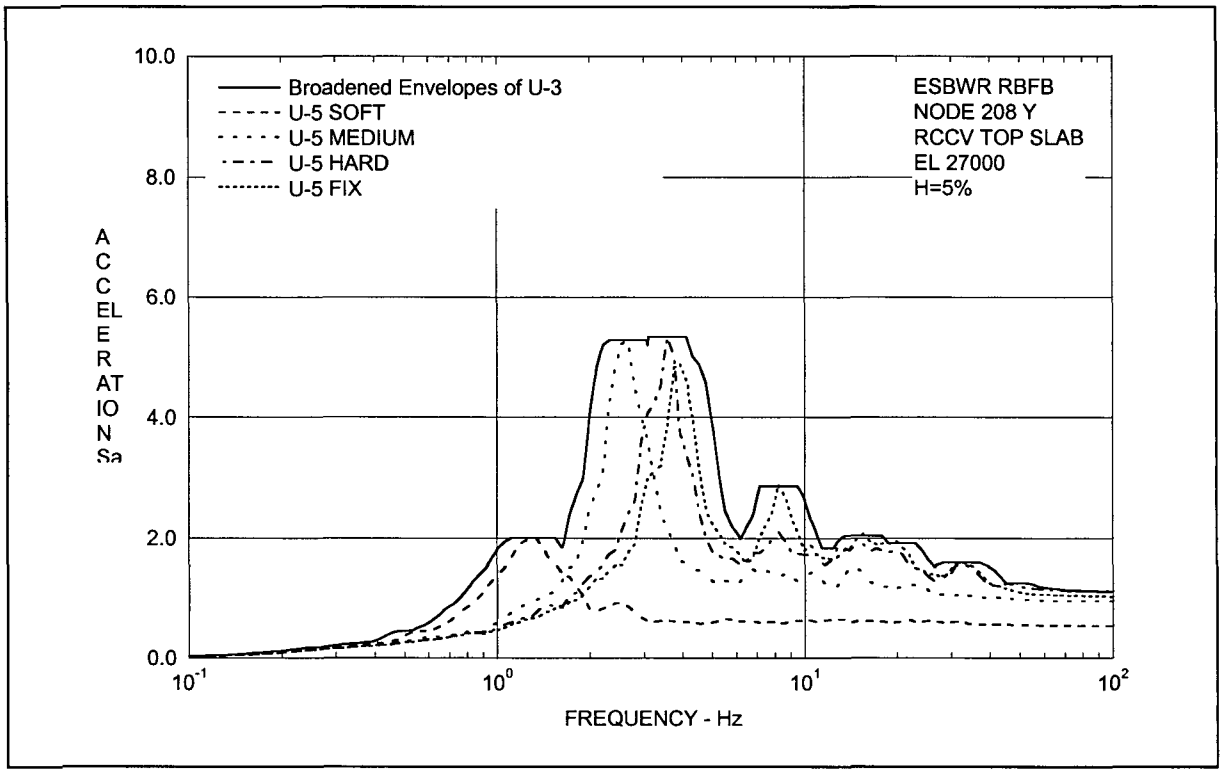

Figure 3.8-41 (11) Floor Response Spectra - RCCV Top Slab Y

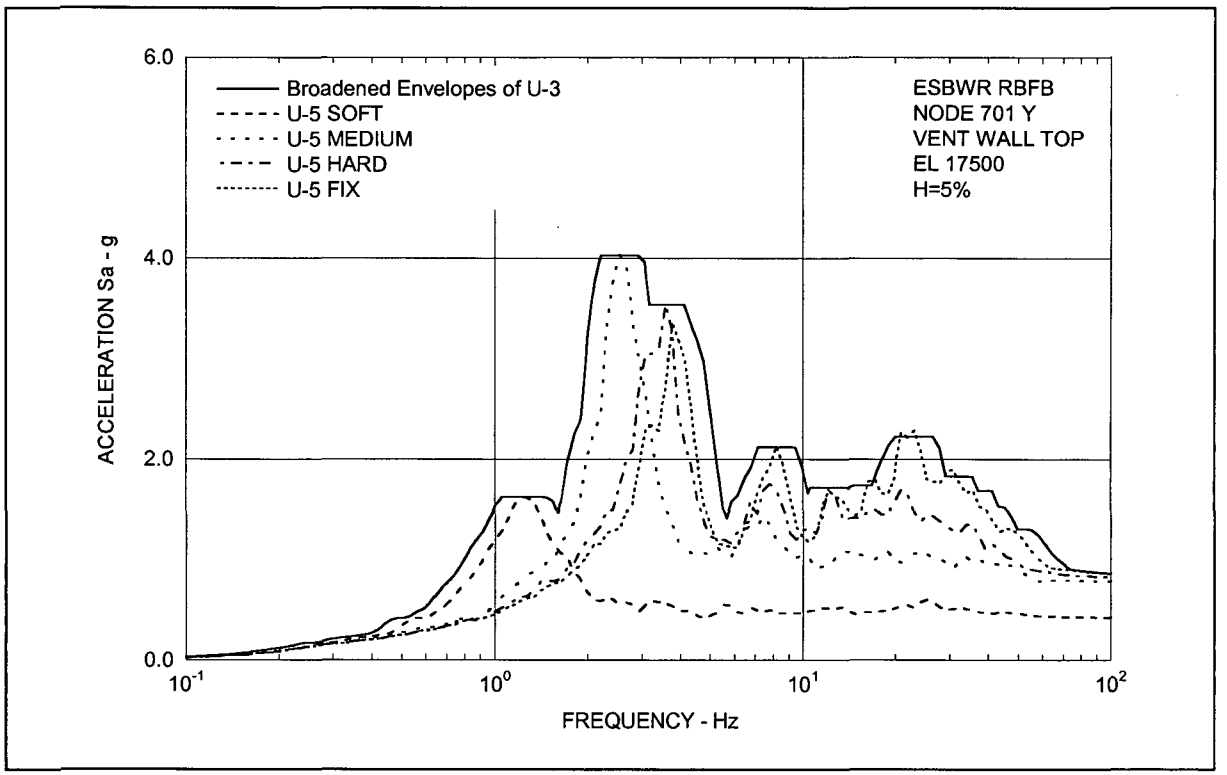

Figure 3.8-41 (12) Floor Response Spectra - Vent Wall Top Y

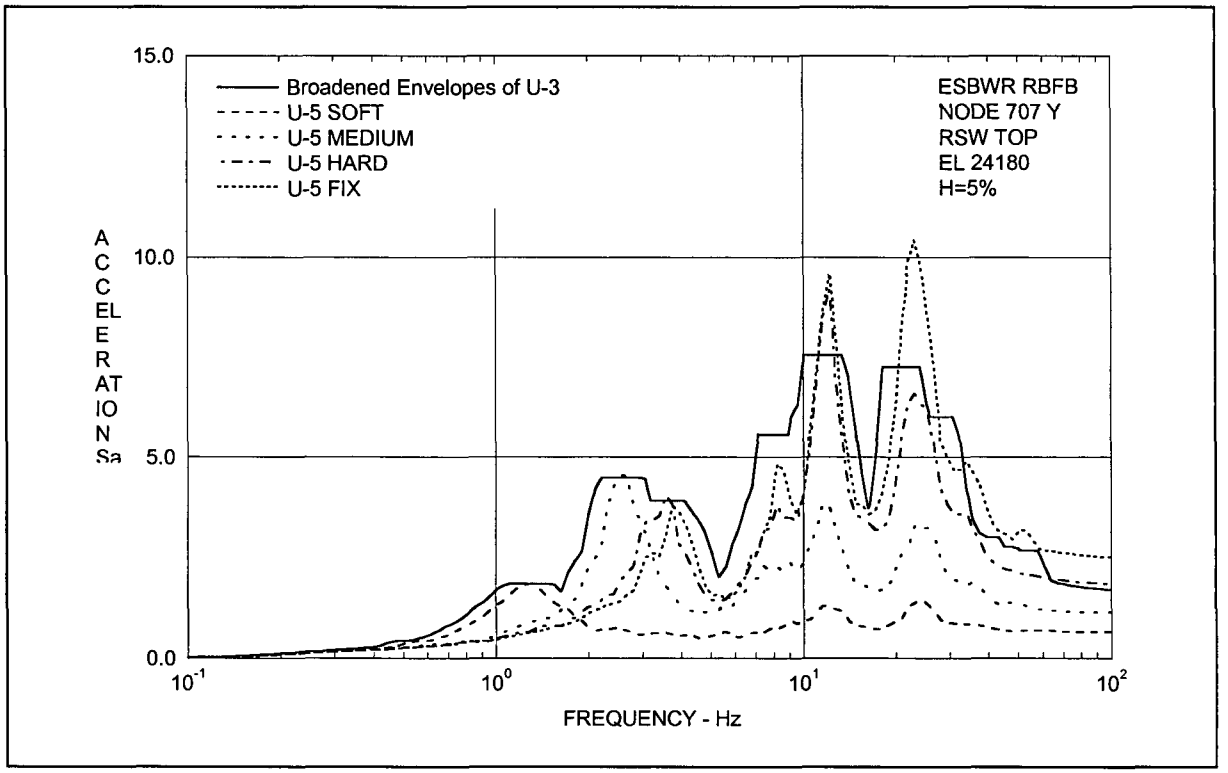

Figure 3.8-41 (13) Floor Response Spectra - RSW Top Y

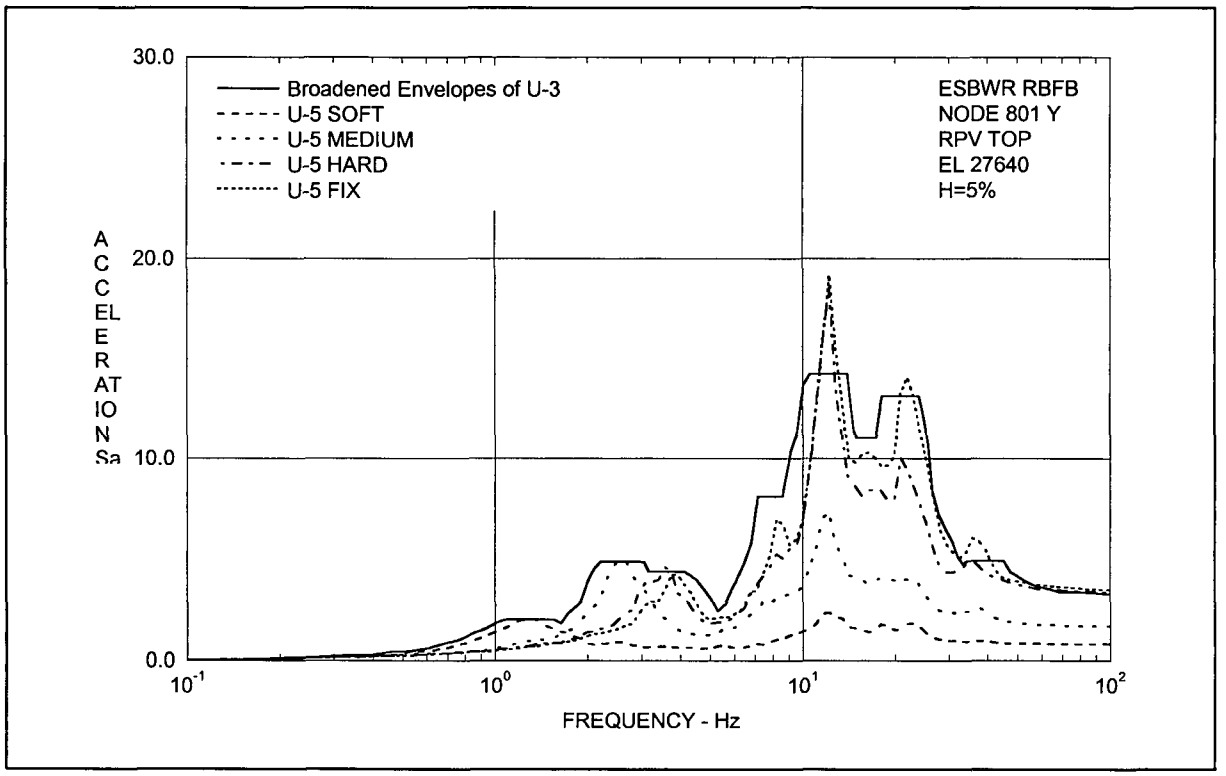

Figure 3.8-41 (14) Floor Response Spectra - RPV Top Y

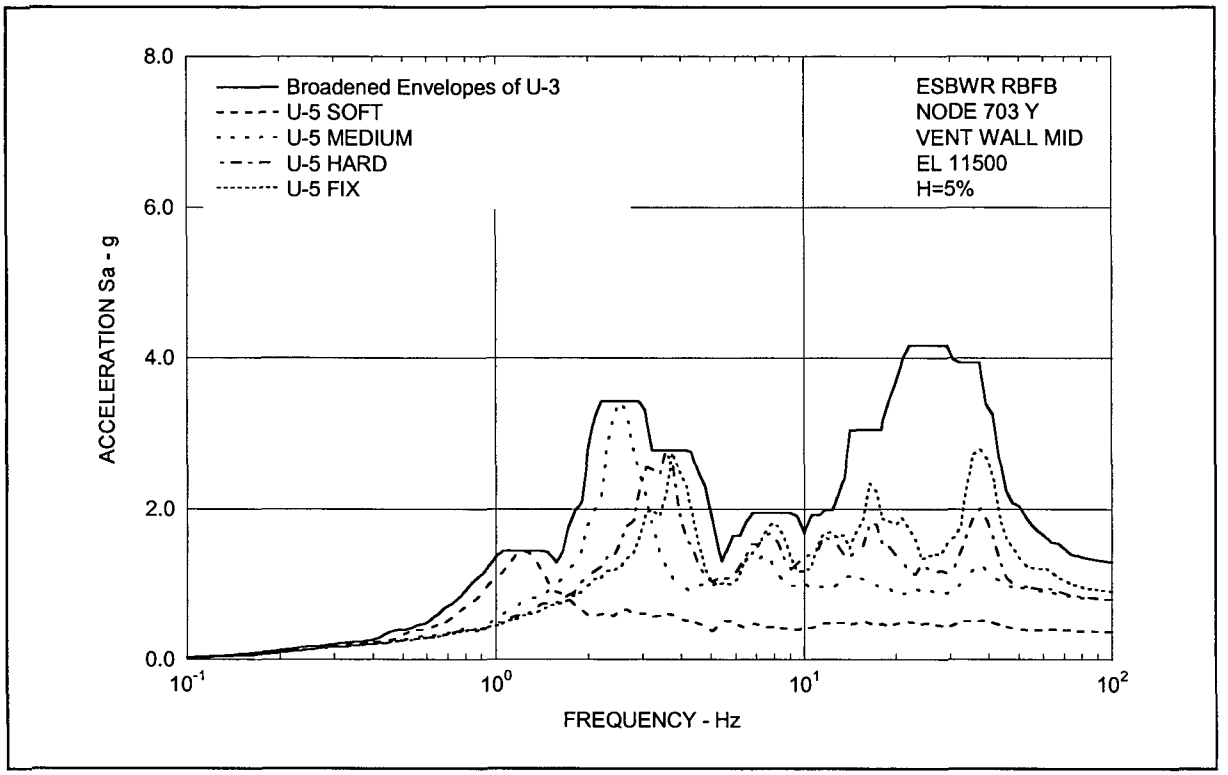

Figure 3.8-41 (15) Floor Response Spectra - Vent Wall Middle Y

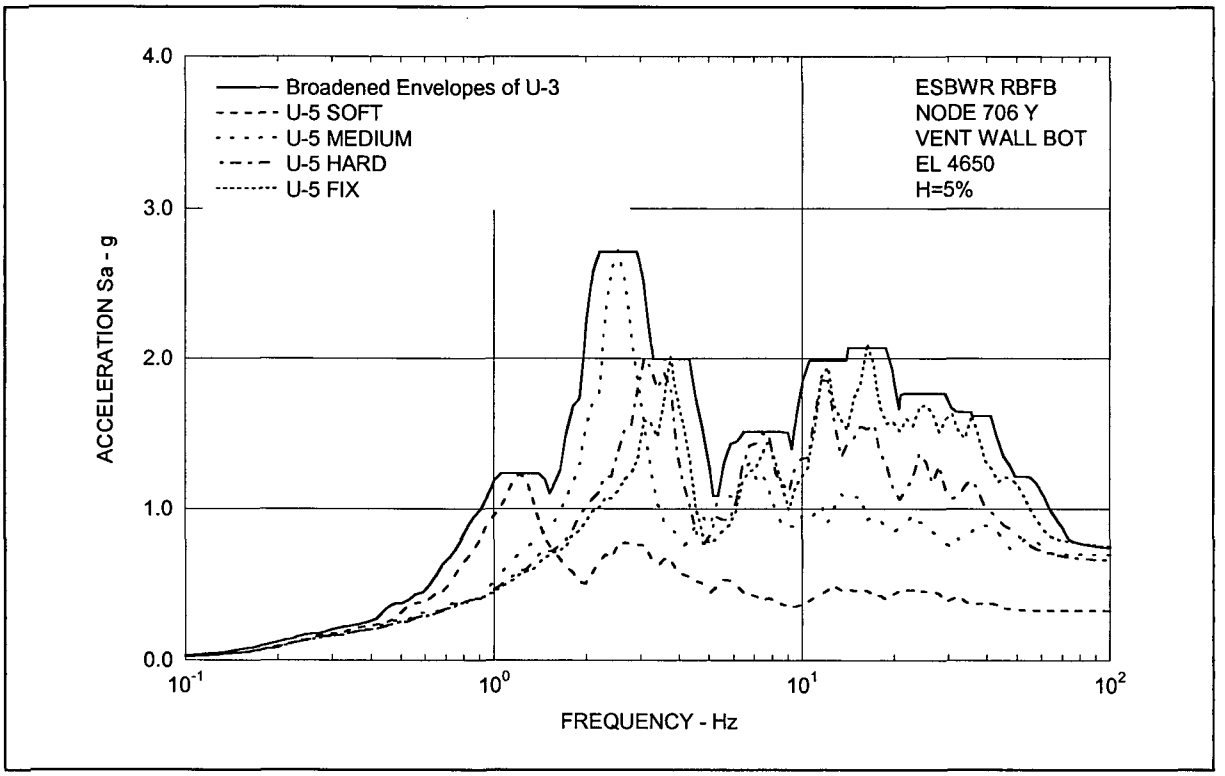

Figure 3.8-41 (16) Floor Response Spectra - Vent Wall Bottom Y

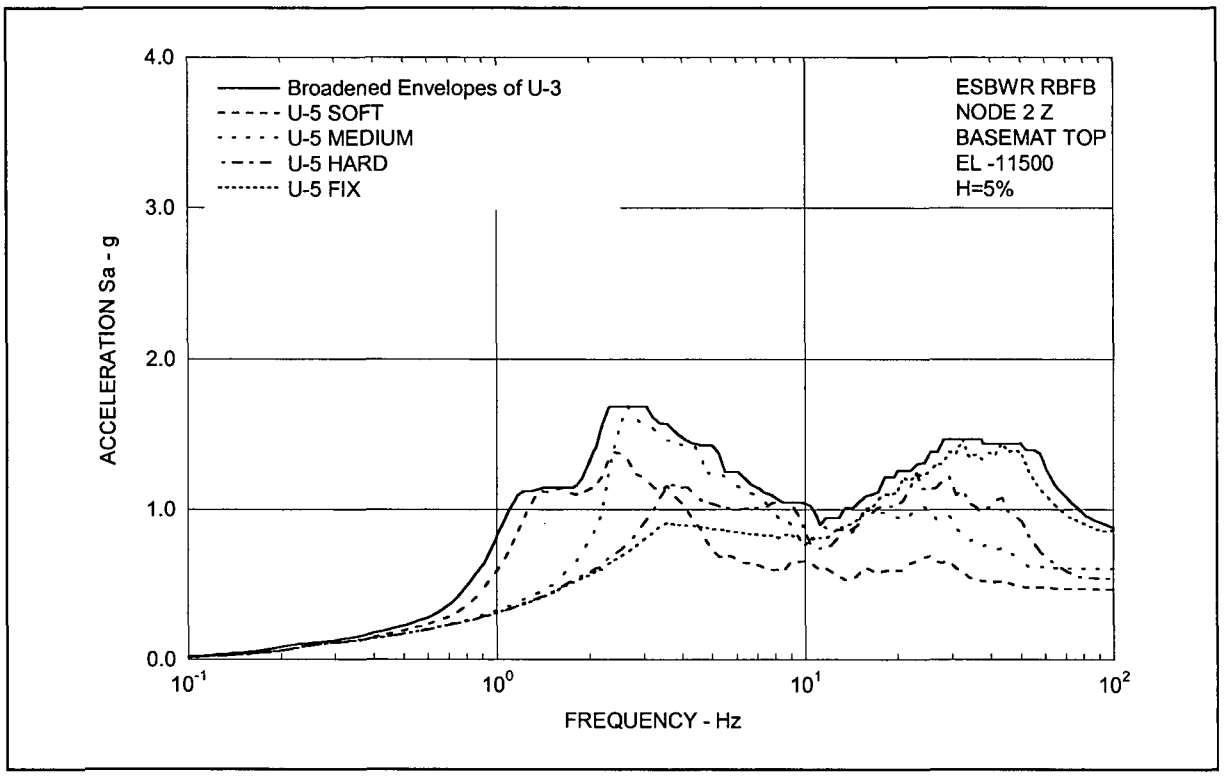

Figure 3.8-41 (17) Floor Response Spectra - RBFB Basemat Z

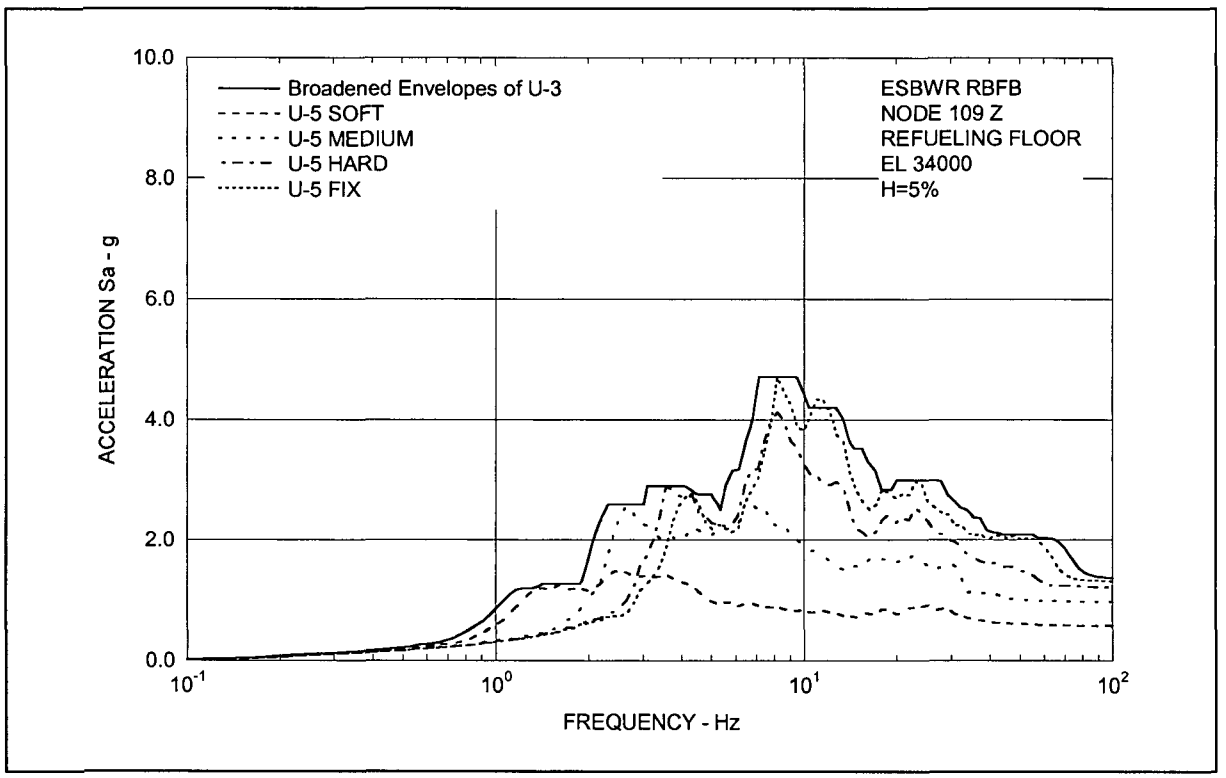

Figure 3.8-41 (18) Floor Response Spectra - RBFB Refueling Floor Z

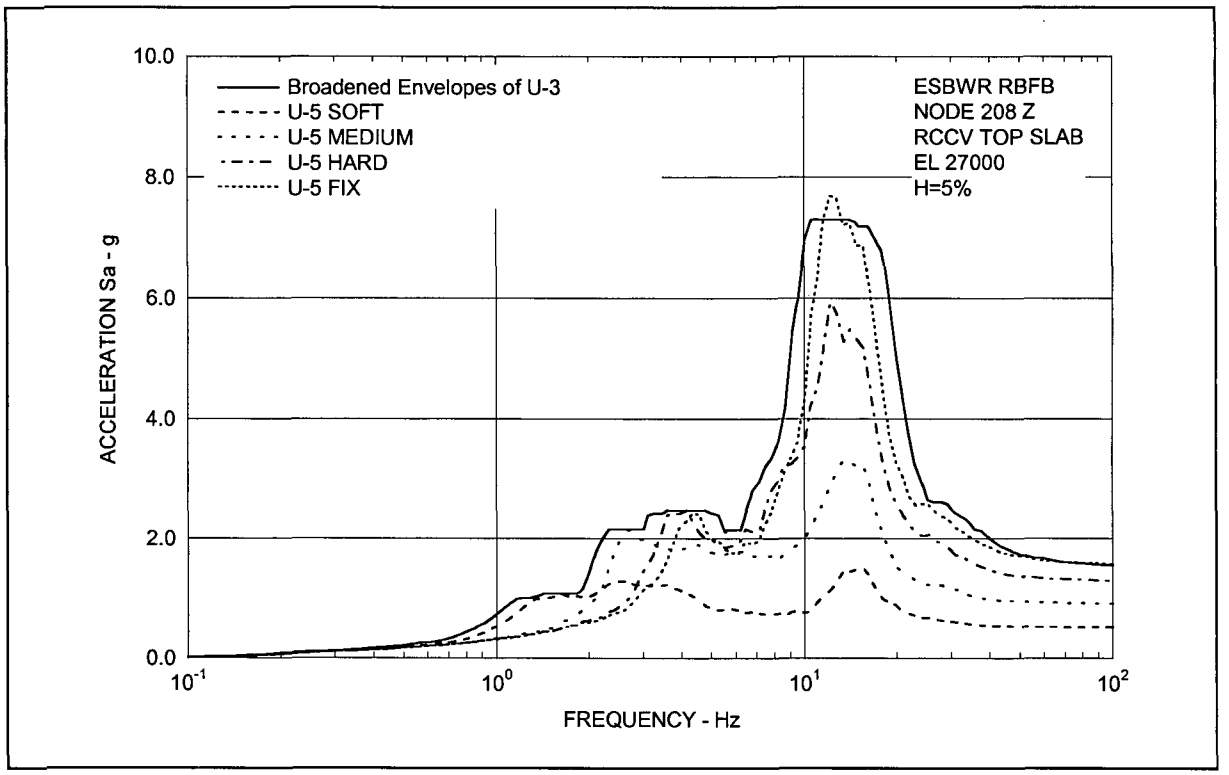

Figure 3.8-41 (19) Floor Response Spectra - RCCV Top Slab Z

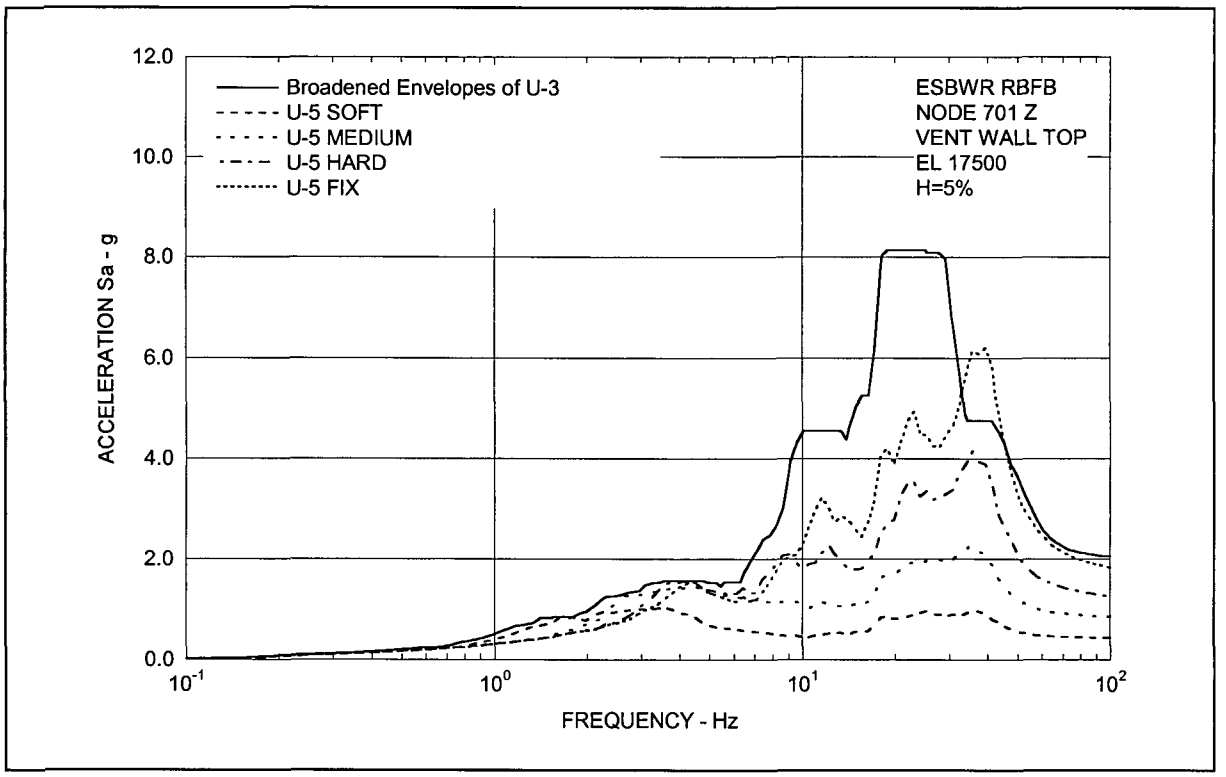

Figure 3.8-41 (20) Floor Response Spectra - Vent Wall Top Z

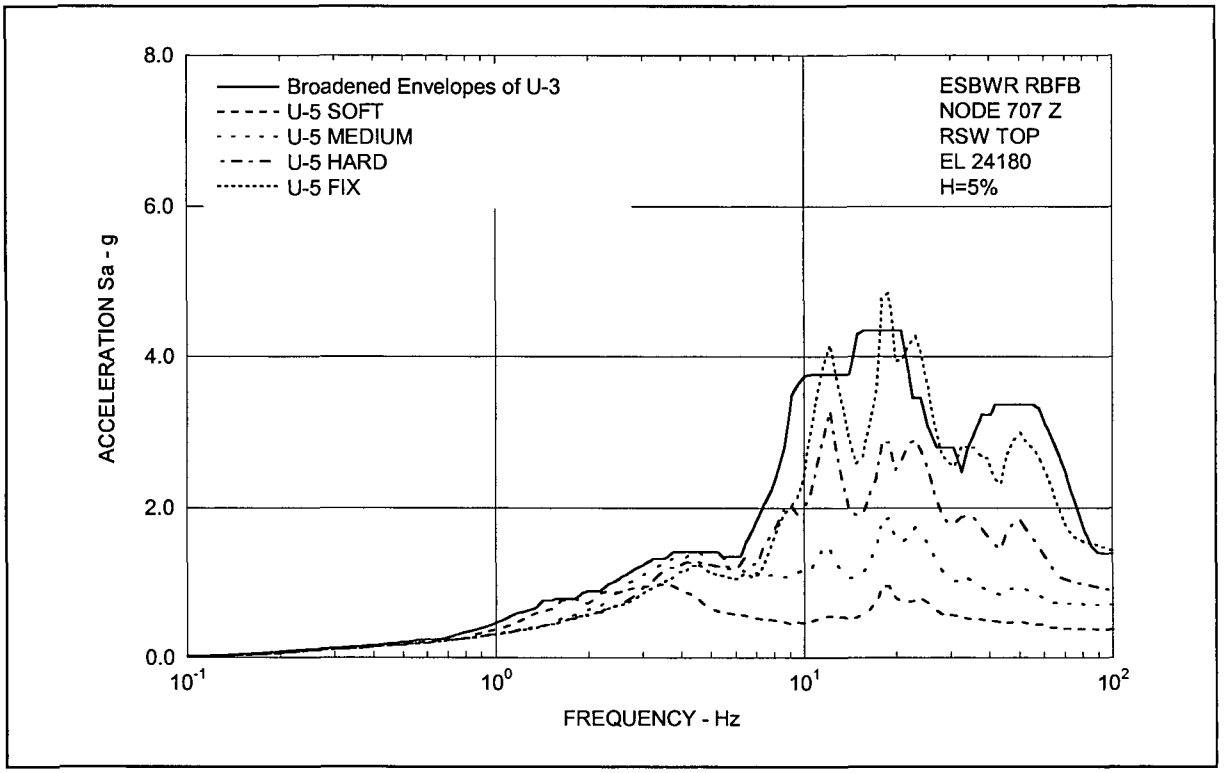

Figure 3.8-41 (21) Floor Response Spectra - RSW Top Z

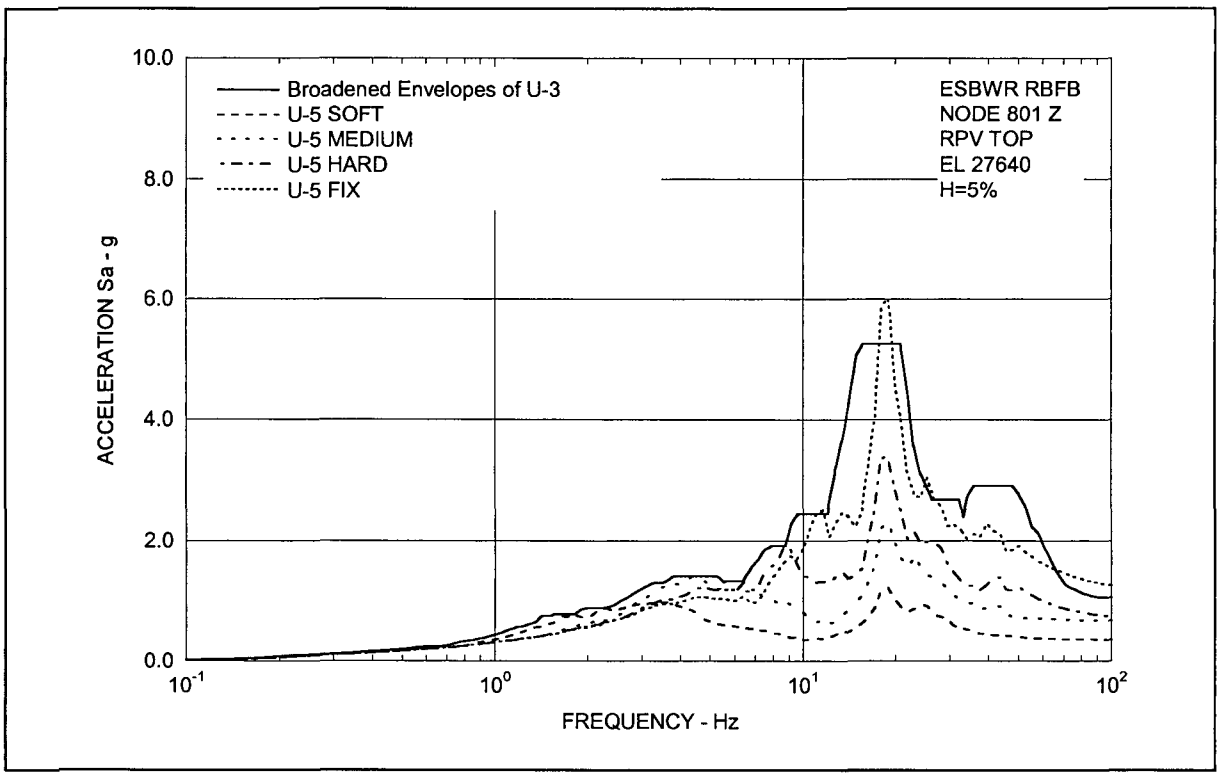

Figure 3.8-41 (22) Floor Response Spectra - RPV Top Z

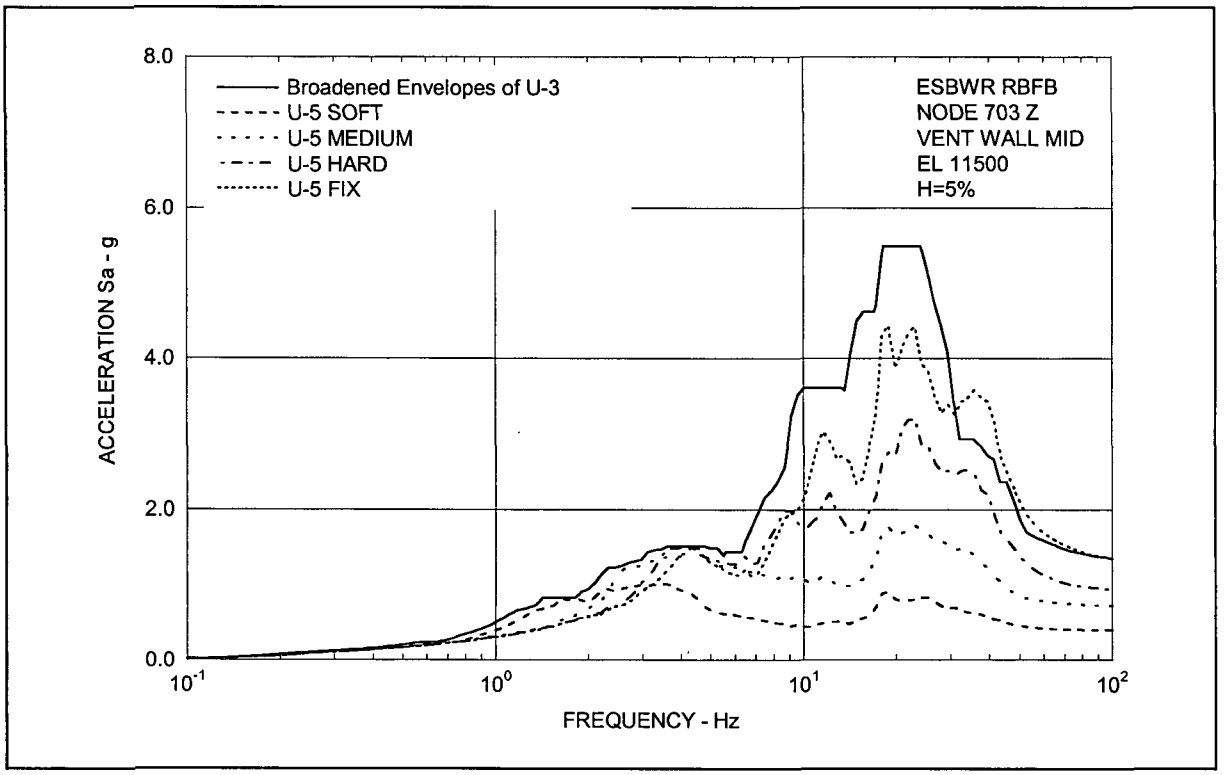

Figure 3.8-41 (23) Floor Response Spectra - Vent Wall Middle Z

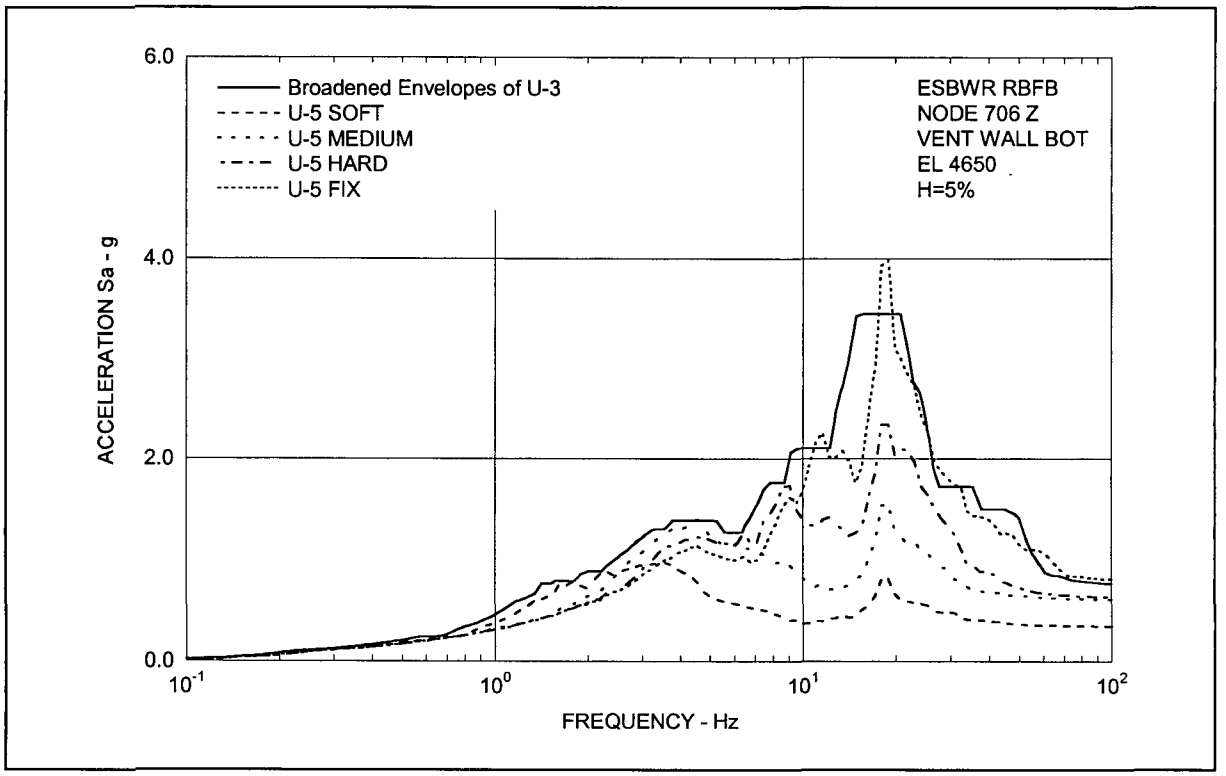

Figure 3.8-41 (24) Floor Response Spectra - Vent Wall Bottom Z

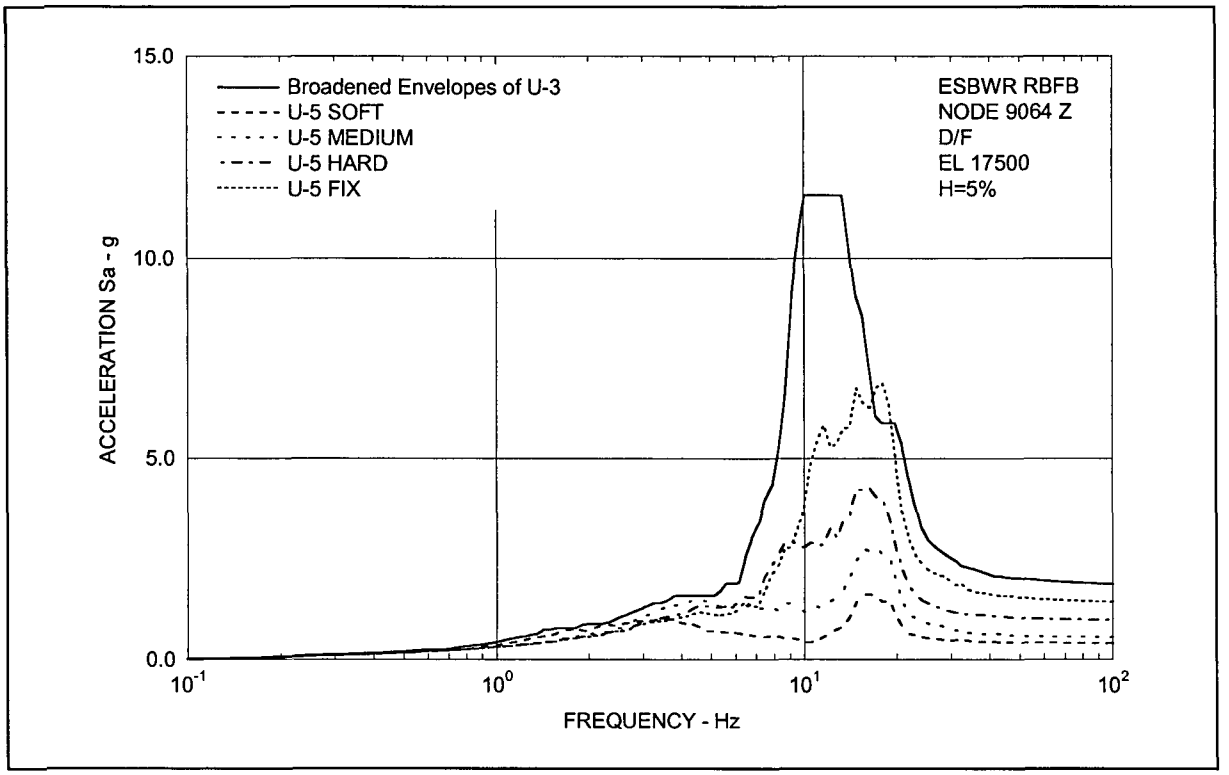

Figure 3.8-41 (25) Floor Response Spectra - D/F Oscillator

NRC RAI 3.8-41, Supplement 3

NRC Assessment Following the December 14, 2006 Audit

The results presented raise a concern whether 50% of the uncracked concrete stiffness is the appropriate assumption. If 75% or 100% of the uncracked concrete stiffness had been used, then the frequency increase would be greater. GE needs to provide its technical basis for the 50% assumption, for the confined unreinforced in-fill concrete. The response only discussed seismic loading; GE needs to provide an assessment of the effect of the in-fill concrete on response spectra generated from hydrodynamic loads (SRV & LOCA). GE also needs to confirm that all thermal loading conditions analyzed using NASTRAN (including normal operating conditions) have been adjusted to account for the presence of the concrete infill, using thermal ratios obtained from ABAQUS/ANACAP thermal stress analyses.

During the audit, GE provided a draft supplemental response to address the above items. The NRC needs to review this response.

GE Response

As shown in Table 3.8-41(2), the frequency change is insignificant as the stiffness increases from 50 to 100% and the frequency shift (10% for VW and 8% for DF) is well within the 15% spectral broadening. Therefore, the consideration of 50% effective stiffness is sufficient.

Table 3.8-41(2) Effect of Concrete Rigidity for Natural Frequencies for VW and DF

Structure		Seismic Model			
		Original	Update	Update+50% Concrete Stiffness	Update+100% Concrete Stiffness
Vent Wall	Frequency (Hz)	25.4	26.8	46.7	51.3
	Ratio	1.0	1.06	1.84 (1.0)	2.02 (1.10)
Diaphragm Floor	Frequency (Hz)	13.5	12.7	17.0	18.3
	Ratio	1.0	0.94	1.26 (1.0)	1.36 (1.08)

Material property
(1) Concrete
Modulus of elasticity: E=13900MPa (50%)
E=27800Mpa (100%)
Poison's ratio : v=0.17
(2) Steel
Modulus of elasticity: E=200000MPa
Poison's ratio: v=0.3

The effect of in-fill concrete stiffness on hydrodynamic response has been evaluated for the same two conditions, no concrete stiffness and 50% concrete stiffness, as considered in the seismic analysis. The results indicate that the response spectra are mostly affected at the vent wall and diaphragm floor locations. The representative response spectra from the reanalysis are shown in Figure 3.8-41(26) through 3.8-41(31) for various hydrodynamic loads.

The Design Basis Accident (DBA) thermal loading conditions analyzed using NASTRAN have been adjusted to account for the presence of the concrete infill in the vent wall and diaphragm floor, using thermal ratios obtained from ABAQUS/ANACAP thermal stress analyses. Normal operating temperature is much lower than DBA and no thermal ratios were considered for normal operating conditions, which is conservative.

In ABAQUS/ANACAP DBA thermal analyses, separate models are used for both a linear solution and a cracking analysis solution as a basis for developing the thermal ratios for the redistribution of internal section forces due to concrete cracking under the DBA thermal loads. The only difference in the modeling between the linear analysis and the cracking analysis is in the treatment of the infill concrete in the vent wall and diaphragm floor. The structural design of these components is based on assuming that the steel will carry all the loads, that is, no credit is taken for the loads that will be carried by the infill concrete. Thus, the design-based NASTRAN models ignore the infill concrete in the linear analyses for section stresses under the required combination of loads. However, since the cracking analyses are intended to provide the actual internal section force distributions under the thermal loads, these models must include the effect of the infill concrete. Thus, for this ABAQUS/ANACAP study, the linear analysis model does not include the infill concrete. In the cracking analysis model, this infill concrete is included and modeled with 20-node brick elements with strain-compatibility enforced at the connections of the plate bending elements used for the steel plates in the vent wall and diaphragm floor.

DCD Impact

DCD Tier 2 Appendix 3F will be revised in the next update.

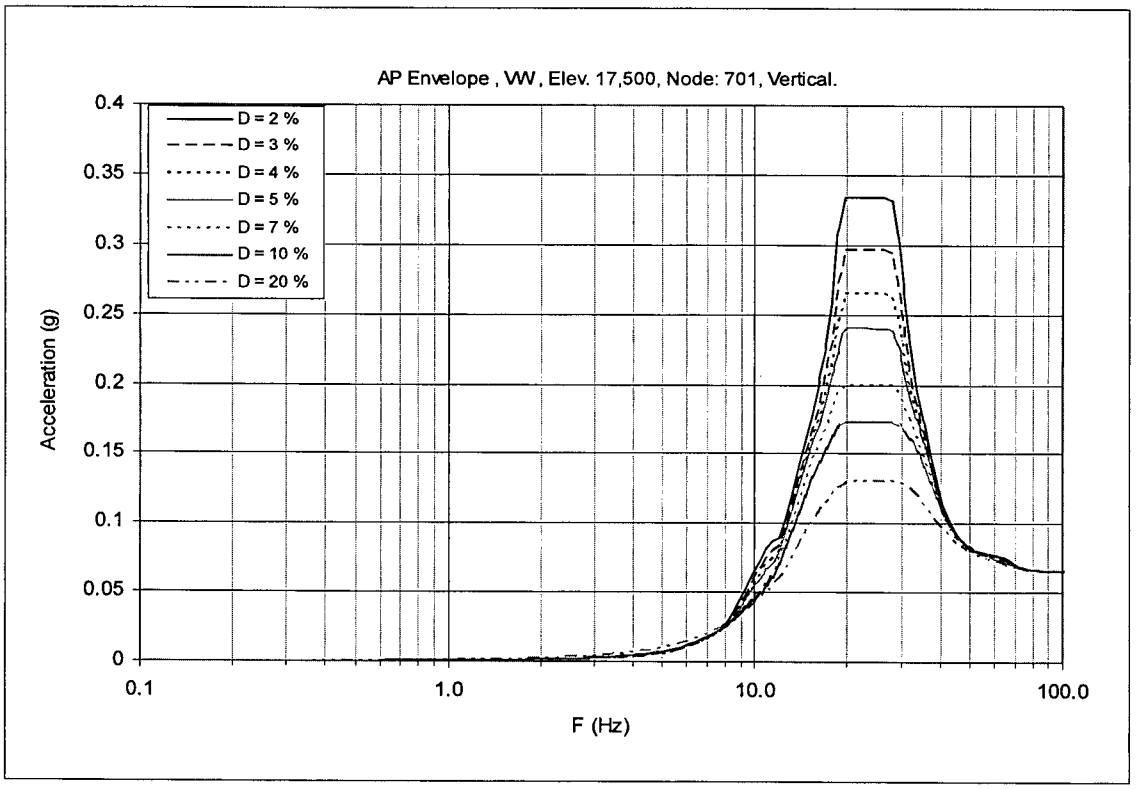

Figure 3.8-41 (26). Floor Response Spectrum—AP Envelope, Node: 701 Vertical

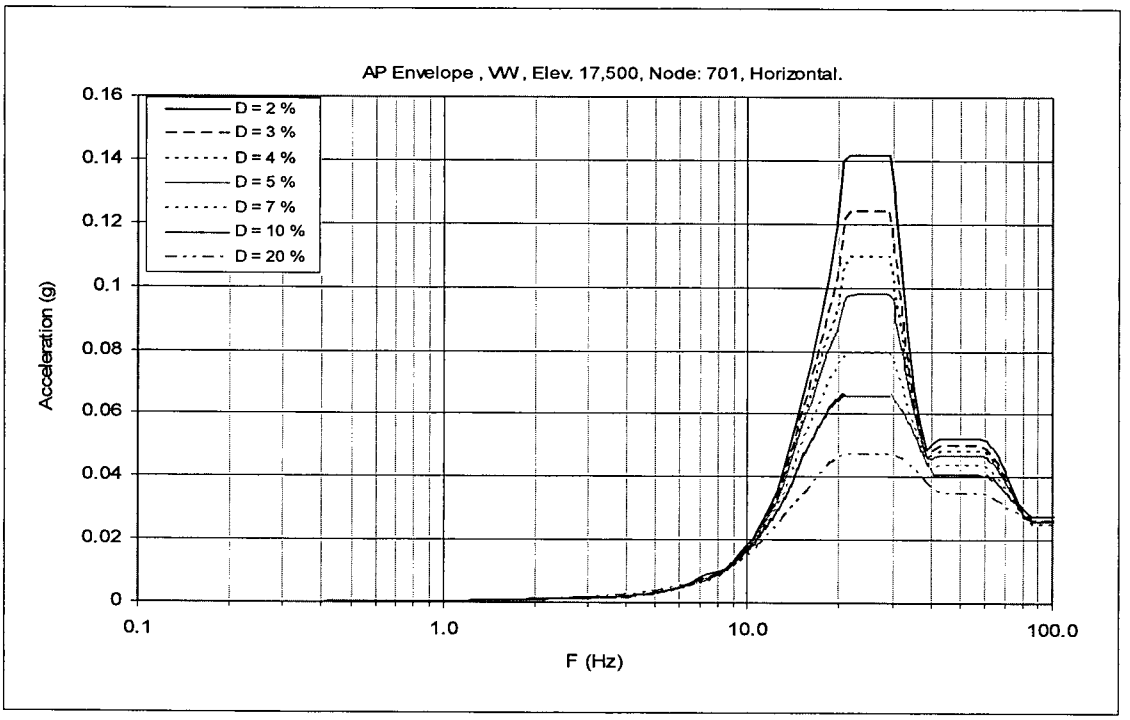

Figure 3.8-41 (27). Floor Response Spectrum—AP Envelope, Node: 701 Horizontal

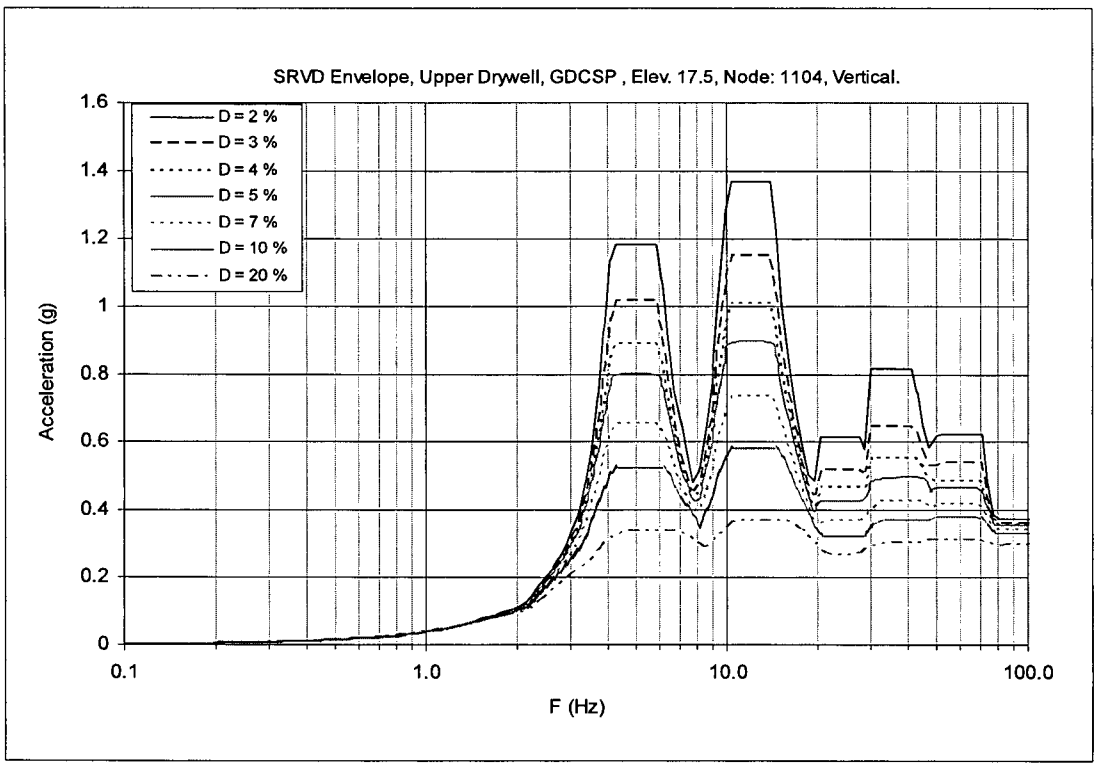

Figure 3.8-41 (28). Floor Response Spectrum—SRV Envelope , Node: 1104, Vertical

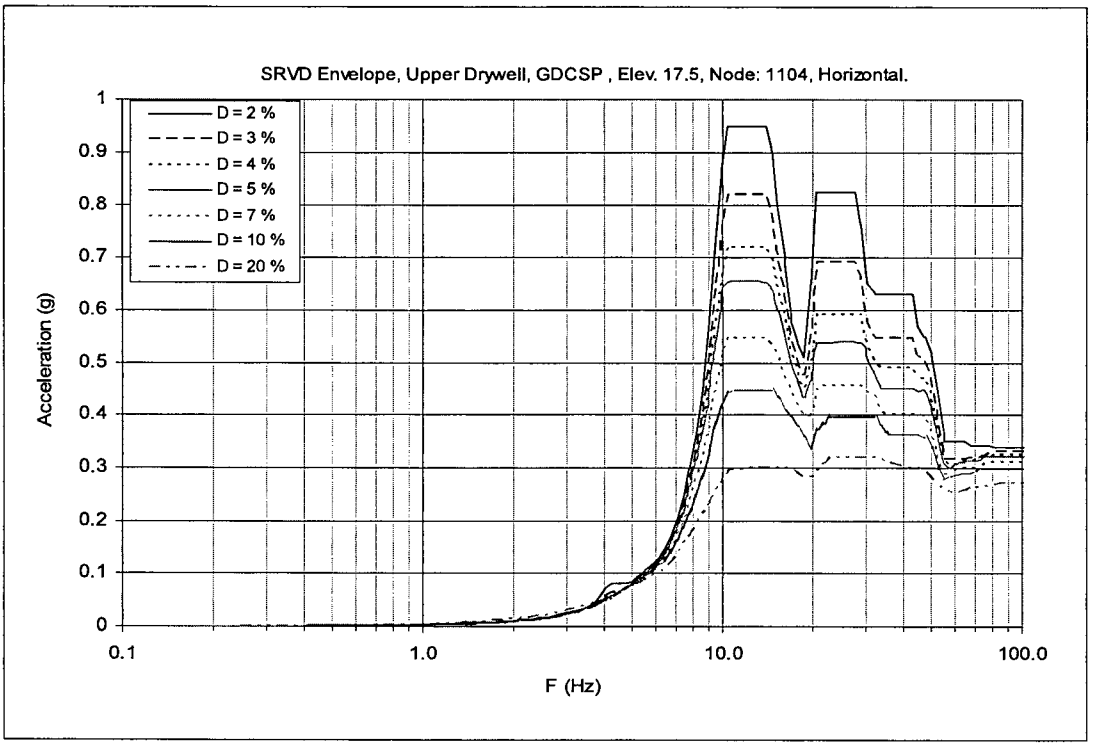

Figure 3.8-41 (29) Floor Response Spectrum—SRV Envelope , Node: 1104, Horizontal

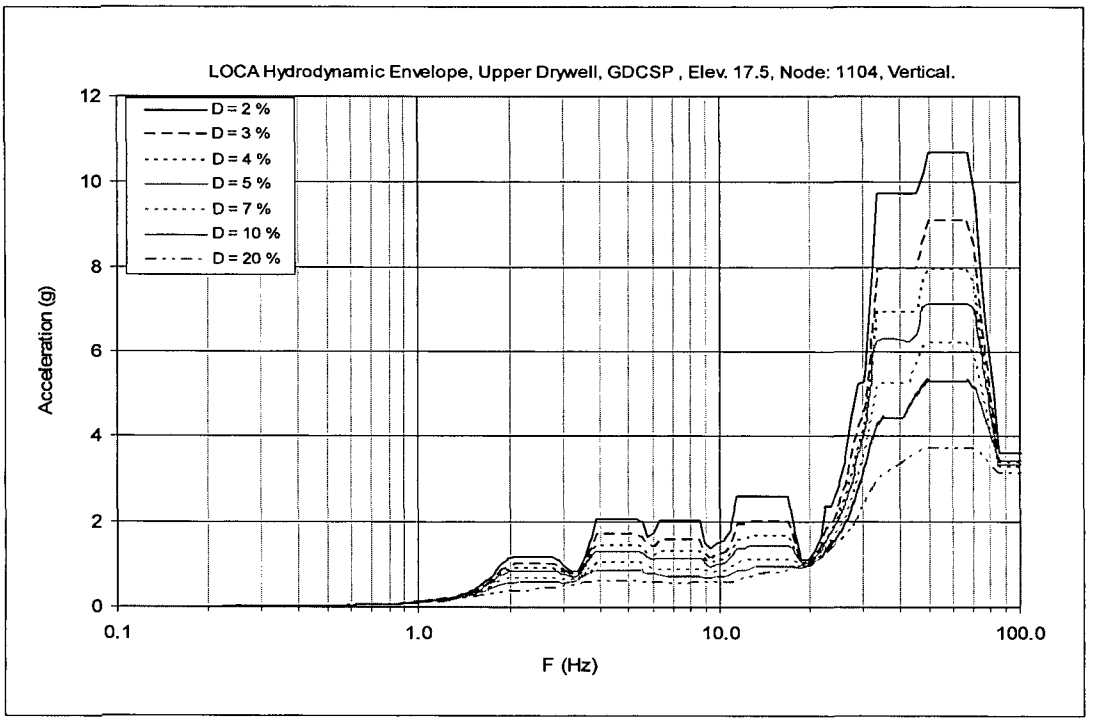

Figure 3.8-41 (30). Floor Response Spectrum—CH & CO Envelope, Node: 1104, Vertical

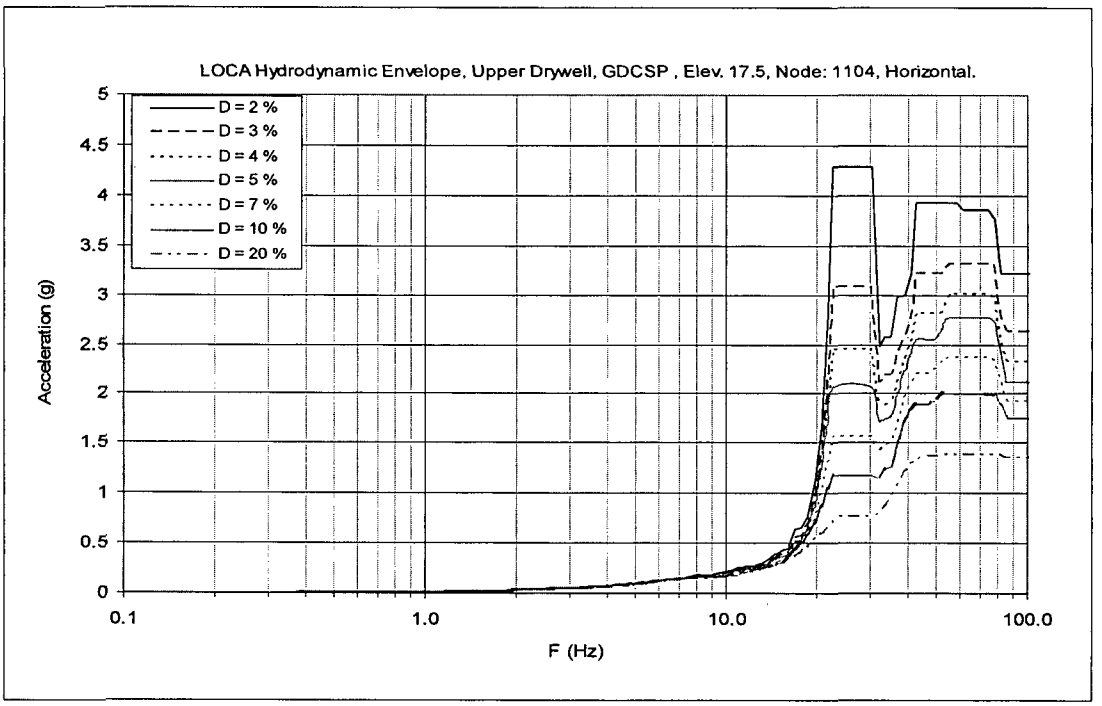

Figure 3.8-41 (31). Floor Response Spectrum—CH & CO Envelope, Node: 1104, Horizontal

NRC RAI 3.8-46

a) *DCD Table 3.8-7 presents the load combinations and acceptance criteria for steel structures inside containment. This table identifies loads P_I and P_s, which are not attributed to any load combinations. Explain what these loads represent and what load factors would be applicable.*

b) *Provide a description of the different subcategories for SRV discharge (e.g., single valve, two valve, ADS, and all valves) and for LOCA (large, intermediate, and small) if applicable, and how they are treated in the load combinations. Also, provide a description and the basis for the method used to combine the various dynamic loads that can occur simultaneously. Include in the description the cyclic loading (i.e., number of events and number of cycles per event) for pressure and temperature loads applicable to the various containment internal structures and how the number of cycles were considered in the design.*

c) *For the SRV and LOCA loads, in addition to the direct pressure loads acting on the boundary of the suppression pool walls and floor, provide a description of the other loads associated with these hydrodynamic loads (e.g., jet loads and drag loads on structural members and quenchers), if applicable. Include a discussion of the analysis method and design approach used to evaluate the effects of these loads on the structural members.*

d) *DCD Table 3.8-7 identifies LOCA loads as condensation oscillation (CO), chugging (CHUG), vent line clearing (VLC), and pool swell (PS); and indicates that the sequence of occurrence is given in Appendix 3B. A description of VLC loads is not provided in Appendix 3B and the sequence of VLC with respect to the other loads is omitted in Figure 3B-3 of Appendix 3B. Therefore, provide a description and sequence for the VLC loads.*

e) *Some containment internal structures are subjected to annulus pressurization (AP) loads. However, it is not clear from DCD table 3.8-7 where AP loads are specified. Therefore, indicate where is the load combination and acceptance criteria for AP loads in DCD Table 3.8-7.*

Include this information in DCD Section 3.8.3, Appendix 3B, and/or Appendix 3G, as applicable. In addition, (1) identify the applicable detailed report/calculation (number, title, revision and date, and brief description of content) that will be available for audit by the staff, and (2) reference this report/calculation in the DCD.

GE Response

a) LOCA (large, intermediate, and small break) are described in Containment Load Definition (CLD) report (NEDE-33261P).

The drywell pressure associated with Intermediate Break Accident (IBA) is labeled as Pi, while the drywell pressure associated with Small Break Accident (SBA) is labeled as Ps. The bounding pressure and temperature values are used as LOCA loads in the load combinations for design.

Pi and Ps will be deleted from DCD Table 3.8-7.

b) LOCA (large, intermediate, and small break) and SRV discharges (single valve first actuation, single valve subsequent actuation, and multiple valves) are discussed in CLD (NEDE-33261P). The bounding pressure and temperature values are used as design as LOCA loads in load combinations for design. The SRV pressure values for these three limiting conditions (single valve first actuation, single valve subsequent actuation, and multiple valves) are furnished in NEDE-33261P. The multiple valves case bounds ADS. The SRV pressure values for these three limiting conditions cover the different subcategories of SRV discharge (e.g., single valve, two valve, ADS, and all valves). The bounding values of these three limiting conditions are shown in DCD Figure 3B-1 and are considered as SRV loads in DCD Section 3.8.1.3 and in the DCD load combination Tables 3.8-4 and 3.8-7. The SRV pressure loads are applied throughout the entire suppression pool as axisymmetrical SRV (DCD Section 3.8.1.4.1.1.2), which represents the all (or multiple) valves case. The SRV pressure loads are applied on half of the entire suppression pool as non-axisymmetrical SRV (DCD Section 3.8.1.4.1.1.1), which represents the single valve or two-valve case. Because the total load for the axisymmetrical SRV load case is greater than those for the non-axisymmetrical cases, only the former is considered in the RCCV and vent wall design. The SRV pressure time history and other related information are presented in DCD Appendix 3B.

LOCA pressure, temperature, SRV, PS, CO or CHUG are combined in accordance with the loading combinations shown in DCD Table 3.8-2 for RCCV or DCD Table 3.8-7 for steel structures inside the containment. Regarding the concurrence of these loads, the combination is based on the time relationship shown in DCD Figure 3B-3.

Total number of cycles based on the number of events and number of cycles per event for cyclic loadings such as SSE, SRV, CO, CHUG will be considered for fatigue evaluation in the detailed design phase for the steel components of the RCCV according to the requirements of NE-3200. Fatigue consideration is not included in the design of steel structures inside containment. A check will be made in the detailed design phase.

c) For the SRV and LOCA loads, the suppression pool walls and floor slab including liners are subjected to direct pressure loads (including hydrostatic pressure) only. Other

associated loads such as jet loads and drag loads are applicable to submerged structures and above pool elevation only. Submerged Structure Loads are discussed in CLD (NEDE-33261P). Design of quenchers will be conducted in the detailed design phase.

d) Vent Line Clearing (VLC) is very short duration and prior to Pool Swell (PS). Because there are no structures in the pool directly opposite the vent exits, the water jets created during VLC have no impact. In addition, the VLC pressure response in the pool is bounded by the peak PS pressure. For these reasons, VLC has not traditionally been considered in containment load responses, and it is neither provided in DCD Appendix 3B nor CLR (NEDE-33261P).

VLC will be deleted from DCD Section 3.8.1.3.5, Tables 3.8-2, 3.8-4 and 3.8-7.

e) A statement shown below will be added at the end of item #3 of DCD Table 3.8-7:

"LOCA includes AP loads."

(1) The applicable detailed reports/calculations that will be available for NRC audit are

- 26A6650, RCCV Structural Design Report, Revision 1, November 2005, containing the structural design details of the RCCV,
- DC-OG-0052, Structural Design Report for Containment Metal Components, Revision 1, September 2005, containing evaluation method and results for structural integrity of containment liner and drywell head,
- DC-OG-0053, Structural Design Report for Containment Internal Structures, Revision 2, October 2005, containing evaluation method and results for structural integrity of containment internal structures.
- NEDE-33261P, Containment Load Definition, Revision 1, May 2006, containing description of hydrodynamic loads.

(2) Since this information exists as part of GE internal tracking system, it is not necessary to add it to the DCD submittal to the NRC.

Markups of DCD Tables 3.8-2, 3.8-4, 3.8-7 and Section 3.8.1.3.5 were provided in MFN 06-191.

NRC RAI 3.8-46, Supplement 1

Additional topics discussed at audit

1) *Regarding item (b) of this RAI, a comparison will be made to determine which loads control: axi-symmetric or non-axisymmetric.*
2) *Provide a statement committing to check fatigue effects on internal structures in the detailed design phase, including definition of events and cycles used.*
3) *On Load Combination Table indicate how loads are combined (ABS; SRSS).*
4) *Regarding item (c) of this RAI, please add to the DCD a footnote on Table 3.8-4. containing the response provided above.*

GE Response

1) Comparison between Axisymmetrical and Non-axisymmetrical SRV Load Cases:

   Major sectional force caused by SRV loads is membrane tensile or compressive force in the hoop direction. For this sectional force, axisymmetrical load cases (uniformly positive and negative) and non-axisymmerical load cases are compared. Figure 3.8-46 (1) shows the applied loading conditions.

   Figure 3.8-46 (2) shows the distributions of hoop membrane forces at the bottom, middle, and top of the Wetwell. For axisymmetrical cases, membrane forces which are equivalent to the maximum values of the non-axisymmetrical case, HOS3, are generated circumferentially in the RCCV wall, and the two axisymmetrical cases, HOS1 and HOS2, envelop the non-axisymmetrical case, HOS3.

   Unlike axisymmetrical loads, non-axisymmetrical SRV loads generate horizontal forces. However, horizontal loads generated by the non-axisymmetrical SRV load are much smaller than those due to seismic loads. Figure 3.8-46 (3) shows the comparison of in-plane shear forces at the Wetwell bottom between the non-axisymmetrical SRV load, HOS3, and the horizontal seismic load. It confirms that the in-plane forces due to HOS3 are negligible in comparison with the seismic load.

2) Fatigue effects on containment internal structures are insignificant since the total number of loading cycles for all events combined (pressure, temperature and dynamic loads such as SSE, SRV and LOCA) is less than 20,000, under which fatigue evaluation is not required in accordance with AISC N690 Table QB1.

3) The peak responses of dynamic loads do not occur at the same instant, SRSS method to combine peak dynamic responses is allowed. However, for conservatism, the resulting forces or stresses from one dynamic load were combined with those due to other dynamic loads in the most conservative manner by systematically varying the sign (+ or -) associated

with dynamic loads as explained in 1) above for the design of RCCV structures. ABS method was used for containment internal steel structures. A footnote will be added to DCD Tables 3.8-2, 3.8-4 and 3.8-7.

4) Other loads such as jet loads and drag loads associated with SRV and LOCA hydrodynamic loads are applicable to submerged structures and those above suppression pool water surface. A footnote will be added to DCD Table 3.8-7.

Markups of DCD Tables 3.8-2, 3.8-4 and 3.8-7 were provided in MFN 06-191, Supplement 1.

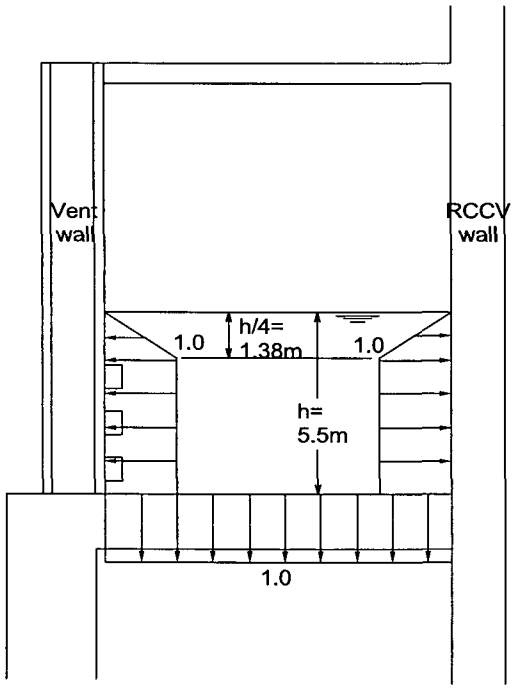

SRV Peak Positive Pressure = 152 kPag
SRV Peak Negative Pressure = -63 kPag
Dynamic Load Factor (DLF) = 2.0

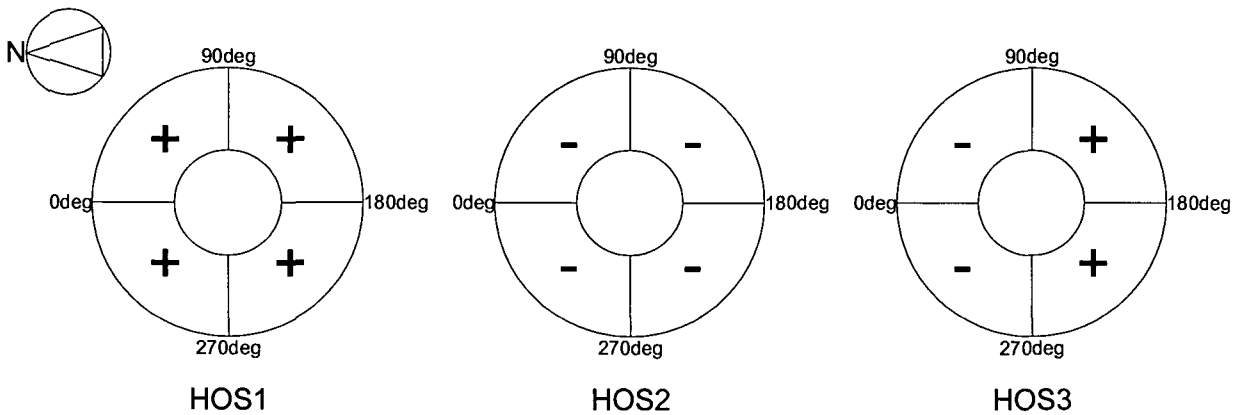

Figure 3.8-46 (1) SRV Load Conditions

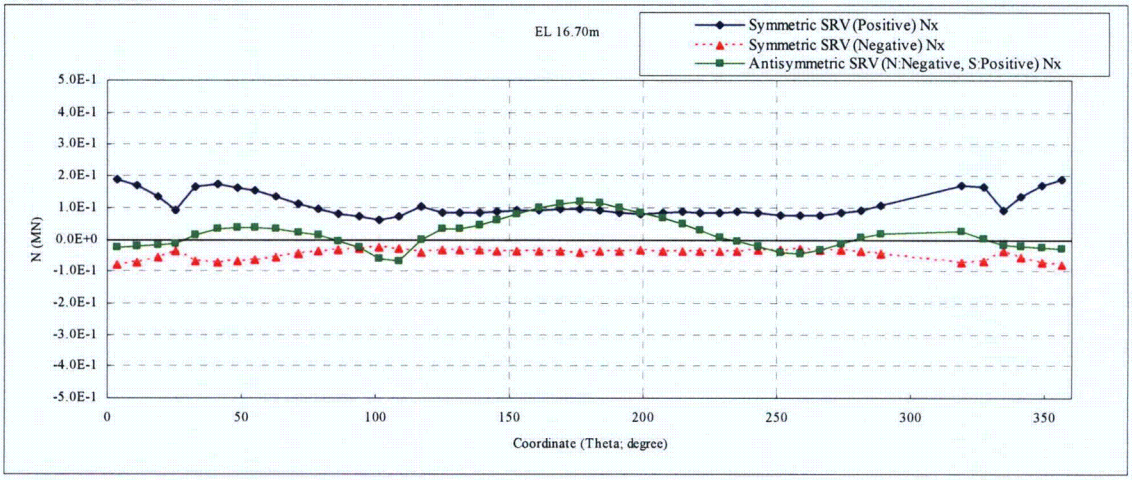

<Wetwell Top>

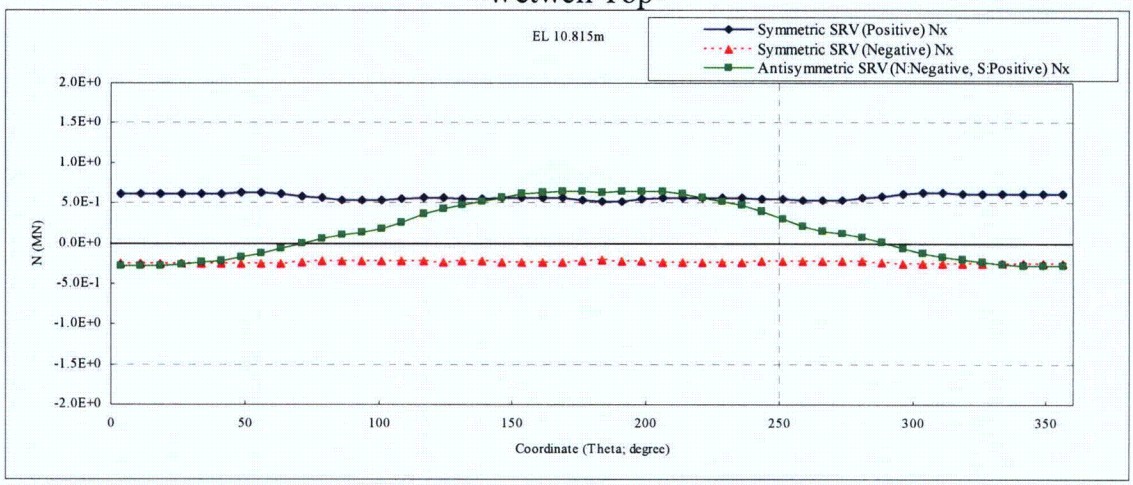

<Wetwell Middle>

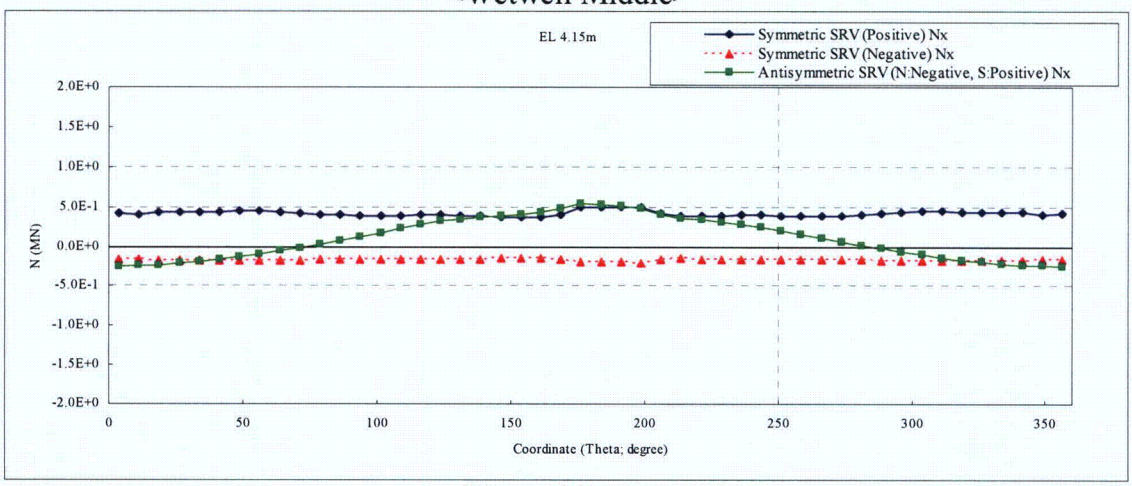

<Wetwell Bottom>

Figure 3.8-46 (2) Comparison of Hoop Membrane Forces between Symmetrical and Non-axisymmetrical SRV loads

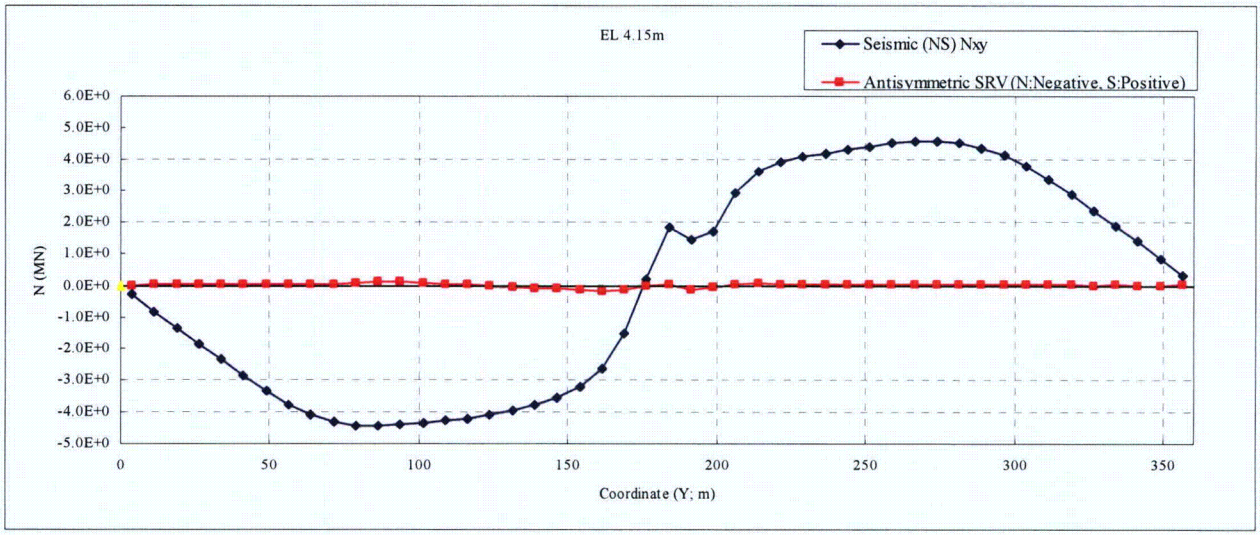

Figure 3.8-46 (3) Comparison of In-plane Shear Forces between Non-axisymmetrical SRV load HOS3 and Horizontal Seismic Load (Wetwell Bottom)

NRC RAI 3.8-46, Supplement 2

NRC Assessment Following the December 14, 2006 Audit

a) Acceptable. b) Combination of dynamic responses: For RCCV - varying sign (equivalent to ABS) is Acceptable. For steel portions of containment, Table 3.8-4 indicates SRSS - technical justification not provided (see RAI 3.8-9). For steel structures inside containment - ABS method was not noted in markup of Table 3.8-7 as indicated in Item 3) of GE response to this RAI. c) A description was not provided for the analysis method and design approach to evaluate the effects of SRV and LOCA direct loads (e.g., jet loads and drag loads) on submerged structures/components & those above the suppression pool water surface. Also, the footnote that will be added to DCD Table 3.8-7 has not been included in the markup of the Table 3.8-7 provided. d) Acceptable. e) Acceptable.

During the audit, GE indicated that for item b), steel portions of containment, this question is addressed under RAI 3.8-9. For steel structures inside containment, the DCD App. 3G will be revised to show that the ABS method is used for design. In addition, DCD Rev. 2, Table 3.8-4 and 3.8-7 have been revised to permit the use of SRSS. This is based on demonstrating the requirements for the use of SRSS which is reviewed under RAI 3.8-9. For item c) GE indicated that the load definitions and the analysis approach is contained in the referenced GE report. GE will provide this report to the staff for review during the audit.

GE Response

b) See response to NRC RAI 3.8-9. As a general design requirement, the SRSS method of combination is permissible for steel structures as stated in DCD Tier 2, Revision 2, Tables 3.8-4 and 3.8-7. Clarification will be added in DCD Tier 2 Appendix 3G to indicate the ABS method is actually used for the existing analysis of steel structures, except for the GDCS pool for which the SRSS method is applied.

c) DCD Tier 2, Revision 2, Table 3.8-7 has an additional footnote #6 "Other loads such as jet loads and drag loads associated with SRV and LOCA hydrodynamic loads are applicable to submerged structures and those above suppression pool water surface. Methodology for calculation of these loads is given in CLD (NEDE-33261P)".

DCD Impact

DCD Tier 2 Section 3G.1.5.4.2 will be revised in the next update as noted in the attached markup.

NRC RAI 3.8-48

DCD Section 3.8.3.4 indicates that the containment internal structures are included in the NASTRAN finite element model described in DCD Subsection 3.8.1.4.1.1. The finite element model described in DCD Subsection 3.8.1.4.1.1 includes the containment, containment internal structures (CIS), reactor building (RB), and fuel building (FB). This subsection also indicates that for LOCA and SRV loadings, the hydrodynamic pressures, as described in Appendix 3B, are applied as equivalent static pressures equal to the dynamic peak value times a dynamic load factor.

Appendix 3F "RESPONSE OF STRCTURES TO CONTAINMENT LOADS" states that this appendix specifies the design for safety-related structures, systems, and components as applicable due to dynamic excitations originating in the primary containment in the event of operational transients and LOCA. The input containment loads are described in Appendix 3B.

The containment loads considered for structural dynamic response analysis are (1) Hydrodynamic Loads which are Condensation Oscillation(CO), Pool Chugging (CH), Horizontal Vent Chugging (HVL), Local Condensation Oscillation (LCO) and Safety Relief valve discharge (SRV) in the Suppression Pool (SP), and (2) Pipe break Loads which consist of Annulus Pressurization (AP) in the annulus between the Reactor Shield Wall (RSW) and Reactor Pressure Vessel (RPV), nozzle jet, jet impingement and pipe whip restraint loads.

The staff notes that Appendix 3F is not reference anywhere in DCD Section 3.8 or Appendix 3G. Therefore, the staff requires additional information to clarify how the dynamic effects of the hydrodynamic loadings were analyzed and how the results were included in the design calculations for the affected structures.

(a) What computer code was used for the hydrodynamic analyses described in Appendix 3F?

(b) Provide detailed information on how the symmetric and asymmetric hydrodynamic loads are applied in the time history analysis.

(c) In Appendix 3F, horizontal and vertical floor response spectra are presented for 4 locations. What is the significance of these 4 locations, compared to any other location? Were response spectra generated at additional locations for future use in subsystem analyses?

(d) From the response spectral plots, it appears that the zero period acceleration (ZPA) frequency is above 100 Hz for several of the loadings; however, the plot is truncated at 100 Hz. Please explain this.

(e) Describe how the hydrodynamic response spectra were/will be utilized in the ESBWR detailed design.

(f) Describe how the structure responses to the hydrodynamic loadings were incorporated into the design evaluation of the affected structures, for load combinations that include hydrodynamic loads.

Include this information in DCD Section 3.8 and/or Appendix 3G, as applicable. In addition, (1) identify the applicable detailed report/calculation (number, title, revision and date, and brief

description of content) that will be available for audit by the staff, and (2) reference this report/calculation in the DCD.

GE Response

a) ANSYS software is used for the hydrodynamic load analysis. DCD Section 3C.6 adresses ANSYS documentation.

b) Symmetric loads have an axisymmetric pressure distribution on the SP walls and floors. Asymmetric loads have cosine pressure distribution on the SP walls and floor.

c) The 4 locations for floor response spectra included in DCD Appendix 3F are intended to be representative. Response floor response spectra are generated at all locations of interest for use in the subsystem analysis.

d) The Fourier spectra (amplitude) have been obtained for loads that contain high frequencies (CO and CH loads). The spectra obtained show a rapid reduction of amplitude with frequency. The energy content of the wave at a given frequency is a function of the square of the Fourier amplitude. For CH loads at 100 Hz, the energy content is 36 times less than at frequencies < 10 Hz and 20 times less than for frequencies < 20 Hz. For CO loads, the factors are even higher. Consequently, the truncation at 100 Hz in response spectra is conservative since the actual ZPA values are at higher frequencies.

e) The use of hydrodynamic and AP load response spectra in combination with others loads will be included in the system and equipment design specifications in the detailed design.

f) The design evaluation of the affected structures for hydrodynamic loads was performed using equivalent static pressure input equal to a dynamic load factor (DLF) of two times the peak dynamic pressure. The resulting forces or stresses were combined with those due to other loads in the most conservative manner by systematically varying the signs associated with dynamic loads.

(1) The applicable detailed report/calculation that will be available for NRC audit is 092-134-F-C-00006, Dynamic Response Analysis of Containment Loads, Revision 3, June 2006, containing the RBFB dynamic analysis and results under AP, SRV and LOCA hydrodynamic loads.

(2) Since this information exists as part of GE internal tracking system, it is not necessary to add it to the DCD submittal to the NRC.

Some changes to DCD Appendix 3F have been identified. Markups of DCD Appendix 3F were provided in MFN 06-191. Markups of DCD Subsections 3.8.1.4.1.1.1 and 3.8.1.4.1.1.2 were provided in MFN 06-191 to add to the DCD Appendix 3F reference.

NRC RAI 3.8-48, Supplement 1

Additional topics discussed at audit

Provide additional clarification for asymmetric load application.

GE Response

For the analysis of the asymmetric loads, only the first two terms in the Fourier series were considered.

$F(\theta) = A0 + A1 \cos \theta$

They were analyzed up to the first harmonic because the structure of the containment is of very thick concrete and is constrained horizontally at different levels by the slabs of the Reactor Building, and so the contribution of the higher order harmonics around the circumference is not significant. Furthermore, the assumption of asymmetric load with discharge of all the valves is conservative since it encompasses the asymmetric load associated with the actuation of one or two valves.

For clarity purposes, editorial changes to part (d) and (e) of the original response are as follows:

Part (d): The last sentence is revised to read "Consequently, the truncation at 100 Hz in response spectra is conservative since the actual spectrum values beyond 100 Hz are lower than that at the 100 Hz cut-off frequency."

Part (f): The last sentence is revised to read "The resulting forces or stresses were combined with those due to other loads in the most conservative manner by systematically varying the sign (+ or -) associated with dynamic loads.

No DCD change was made in response to this RAI Supplement.

NRC RAI 3.8-48, Supplement 2

GE Additional Post Audit Action

a. *GE to explain how the correct asymmetric pressure distribution can be applied to the ANSYS axi-symmetric model using only the n=1 harmonic. This produces negative pressure (i.e., external pressure) on one side of the axi-symmetric structure.*

b. *GE does not have examples of design specifications for distributions systems and equipment. These would be developed at a later date following the criteria contained in the DCD. GE to confirm that a COL item is needed.*

GE Response

a. ANSYS allows the use of axi-symmetric structural elements with harmonic loads (non axi-symmetric) just specifying the number of waves (harmonic order) and the symmetry/ no symmetry condition (cosine / sine term). Using only the n=1 harmonic is a simulation of asymmetric pressure loading over the entire suppression pool boundary following the cosine spatial distribution with the peak pressure at 0 degree (positive) and 180 deg (negative). This is a conservative analysis consideration since the actual asymmetric loads are localized to portions of the pool boundary.

b. Besides seismic loads, other appropriate hydrodynamic loads such as Condensation Oscillation (CO) and Annulus Pressurization (AP) loads are enveloped and are imposed on vendors supplying equipment to GE by means of procurement specifications. This is typical for Seismic Category I procured equipment subject to dynamic loads. Vendors use these loads for analysis and/or testing of the equipment being furnished. Since these loads are in compliance with the DCD, an open COL item is not deemed necessary.

   Examples of GE design specifications for equipment procured for recent BWR projects are available for NRC audit at GE offices.

No DCD change was made in response to this RAI Supplement.

NRC RAI 3.8-48, Supplement 3

NRC Assessment Following the December 14, 2006 Audit

For part b, Supplements 1 and 2 appear to contradict each other, with respect to the treatment of asymmetric loads. Supplement 1 indicates that both the N=0 and N=1 terms are used, while Supplement 2 indicates that only the N=1 term is used. Assuming that the asymmetric pressure is an internal pressure around the circumference, then at least the N=0 and N=1 terms are needed to model the pressure distribution. One circumstance where a load can be modeled using solely the N=1 term would be horizontal seismic inertial loading on an axisymmetric containment shell. Parts a, c, and d are OK, except markup of DCD App. F, DCD 3.8.1.4.1.1.1, and 3.8.1.4.1.1.2 could not be located. Part e is acceptable - Mechanical, and electrical equipment are addressed in DCD 3.9.2 and 3.10, where SSE loads and RBV loads are specified. Part f Acceptable.

During the audit, GE provided a draft supplemental response to this RAI to explain that for the asymmetric loads, the total response is based on the summation of the N=0 and the N=1 harmonic terms. The markup of DCD App. 3F, DCD 3.8.1.4.1.1.1, and 3.8.1.4.1.1.2 have already been incorporated into DCD Rev. 2. The staff will review DCD App. 3F if possible during the audit.

GE Response

Both the N=0 and N=1 terms are used for asymmetric loads and the total response is the summation of both Fourier harmonic terms. Markups of DCD Tier 2 Appendix F and Sections 3.8.1.4.1.1.1, and 3.8.1.4.1.1.2 were provided in MFN 06-191 and have been incorporated in DCD Tier 2 Revision 2.

DCD Impact

No DCD change was made in response to this RAI Supplement.

NRC RAI 3.8-51

From the information presented in DCD 3.8.3.4 and Appendix 3G, it is not clear how the individual member forces from thermal, seismic, hydrodynamic, and other loads are obtained from the finite element model.

a) Provide a description of what type of analyses (static, response spectra, time history, etc.) are used with the finite element model for each of the applicable loads in order to obtain individual member forces for design.

b) For thermal loading consideration, define the transient and steady state thermal loads, nonlinear temperature distributions, analysis approach, model, and design approach utilized for the major containment internal structures.

Include this information in DCD Section 3.8.3 and/or Appendix 3G. In addition, (1) identify the applicable detailed report/calculation (number, title, revision and date, and brief description of content) that will be available for audit by the staff, and (2) reference this report/calculation in the DCD.

GE Response

a) The type of analyses for various loads considered for the containment internal structures, such as Diaphragm Floor (DF), Vent Wall (VW), RPV Support Bracket (RPVSB), Reactor Shield Wall (RSW) and GDCS Pool (GDCSP) are:

(i) Dead Load

Static analysis was performed for the dead load to all containment internal structures. Hydrostatic loads of pool water were also applied statically to VW and GDCSP.

(ii) Pressure load

Static analysis was performed for the pressure load (Po and Pa) applied to DF and VW.

(iii) Thermal load

Static analysis was performed for the thermal load (To and Ta) to all internal structures.

(iv) Seismic load

Static analysis was performed for the seismic load on DF, VW, RPVSB and RSW in the integral NASTRAN model, while response spectra analysis was performed for GDCSP local model.

In this response spectra analysis, it is assumed that all pool water mass is distributed uniformly on the GDCDP wall and RCCV wall. This is considered as a conservative assumption, therefore sloshing was not considered in GDCSP local model. For integral NASTRAN model, however, sloshing load was considered as the static pressure load on DF upper surface and static reaction load from GDCSP wall. The results from integral NASTRAN model due to these loads were used for the structural integrity evaluation of the structures other than GDCSP, while the results from GDCSP local model were used for evaluation of GDCSP itself.

(v) Hydrodynamic load

Static analysis was performed for the hydrodynamic load (CO, CH and SRV) on VW taking DLF = 2 into account.

(vi) Pipe Break loads consist of Annulus Pressurization (AP) load, jet impingement and pipe-whip restraint loads

(vii) These loads acting on the RSW were first analyzed for dynamic response using the NASTRAN beam model. The resulting maximum values of bending moment and shear force were then applied to the integral NASTRAN static analysis model.

b) All steel temperature is the same as atmospheric temperature. The temperature of the intermediate node of VW rib plate is the average value of outer and inner plate ones. Further discussion of thermal analysis is described in the response to RAI 3.8-41.

(1) The applicable detailed report/calculation that will be available for NRC audit is DC-OG-0053, Structural Design Report for Containment Internal Structures, Revision 2, October 2005, containing evaluation method and results for structural integrity of containment internal structures.

(2) Since this information exists as part of GE internal tracking system, it is not necessary to add it to the DCD submittal to the NRC.

Markups of DCD Section 3G.1.5.4.2 were provided in MFN 06-191.

NRC RAI 3.8-51, Supplement 1

Additional topics discussed at audit

None.

GE Response

None.

No DCD change was made in response to this RAI Supplement.

NRC RAI 3.8-51, Supplement 2

GE Additional Post Audit Action

Revise the DCD to describe application of impulsive and convective loads for all pools except the GDCS pool, where it was shown that the convective load was sufficiently small.

GE Response

The water mass in all pools was treated as impulsive mass rigidly attached to the pool structure in the stick model for seismic analysis. In the stress analysis for all pools, except for the GDCS pool and suppression pool, the seismic-induced hydrodynamic pressures were calculated for impulsive and convective components separately and the results then combined by the SRSS method. For the GDCS and suppression pools, the total pressure was conservatively considered to be all impulsive.

Markups of DCD Tier 2 Subsection 3.8.4.3.1.1 were provided in MFN 06-191, Supplement 2.

NRC RAI 3.8-51, Supplement 3

NRC Assessment Following the December 14, 2006 Audit

Item a) (vi) - based on a response given to RAI 3.8-53, why doesn't this item include pipe break loads associated with pipe breaks other than AP? For GE Supplement 2 response, what is the technical basis for the statement that "For the GDCS and the suppression pools, the total pressure was conservatively considered to be all impulsive. Couldn't the addition of the convective load (depending on the frequency of sloshing and spectral acceleration) increase the total pressure loads on the pools?

During the audit, GE indicated that the only pipe break load that needs to be considered for the evaluation of containment internal structures is the AP pipe break load (due to MS, FW, & RWCU) which consists of pressurization in the annulus and associated jet impingement, missile load, and reaction load. The basis for this is contained in DCD Section 3.6. For the second item identified above, GE provided a draft supplemental response which compares the response acceleration values for the convective and impulsive modes. The contribution of the convective mode is very small, and so considering the entire water mass in the impulsive mode is acceptable.

GE Response

AP loads include all high-energy line breaks (main steam, feedwater and reactor water cleanup) in the drywell. Pipe break loads consist of AP and other pipe breaks.

Response acceleration to sloshing is much lower than the impulsive response. Therefore, it is conservative to use impulsive response for the total mass of the pool water. See Tables 3.8-51 (1) through 3.8-51 (4).

Table 3.8-51 (1) GDCS Pool Sloshing Frequency and Response Acceleration of Convective Mode

	Large GDCS Pool		Small GDCS Pool	
	X-Direction	Y-Direction	X-Direction	Y-Direction
Sloshing Frequency (Hz)	0.385	0.166	0.205	0.385
Response Acceleration (G)	0.55	0.14	0.24	0.53

Table 3.8-51 (2) GDCS Pool Fundamental Frequency and Response Acceleration of Impulsive Mode

	Large GDCS Pool		Small GDCS Pool	
	X-Direction	Y-Direction	X-Direction	Y-Direction
Fundamental Frequency (Hz)	13.67	27.86	28.87	16.87
Response Acceleration (G)	1.49	1.60	1.73	1.45

Table 3.8-51 (3) S/P Response Acceleration of Convective Mode

	First Mode (0.045 Hz)		Second Mode (0.279 Hz)	
	X-Direction	Y-Direction	X-Direction	Y-Direction
Response Acceleration (G)	0.04	0.04	0.30	0.33

Table 3.8-51 (4) S/P Maximum Response Acceleration of Impulsive Mode

	X-Direction	Y-Direction
Maximum Response Acceleration (G)	0.71	0.79

DCD Impact

No DCD change was made in response to this RAI Supplement.

NRC RAI 3.8-56

DCD Section 3.8.3.4.1 describes the analysis and design of the diaphragm floor and DCD figure 3G.1-55 provides a drawing of the diaphragm floor. From this information it is not clear whether the diaphragm floor is attached to the radial support beams in a manner that makes them respond as an integral member. Provide a description in DCD Section 3.8.3.4.1 and show in DCD Figure 3g.1-55 how the diaphragm floor and radial support beams are connected.

GE Response

The radial support beams are welded to the diaphragm floor, so they form an integral structure.

Markups of DCD Section 3.8.3.4.1 and DCD Figure 3G.1-55 were provided in MFN 06-191.

NRC RAI 3.8-56, Supplement 1

NRC Assessment Following the December 14, 2006 Audit

Further review of proposed markup of DCD Figure 3G.1-55 identified that there is insufficient information about the welded connection between the radial support beams and the diaphragm floor. The note should identify that the weld is continuous along the entire length, and that the weld is typical on both sides for all radial beams. GE needs to revise DCD Figure 3G.1-55 accordingly.

During the audit, GE provided a draft supplemental response which provides the details for the weld connections and states that the revised detail will be included in the DCD.

GE Response

DCD Tier 2 Figure 3G.1-55 will be revised as shown below:

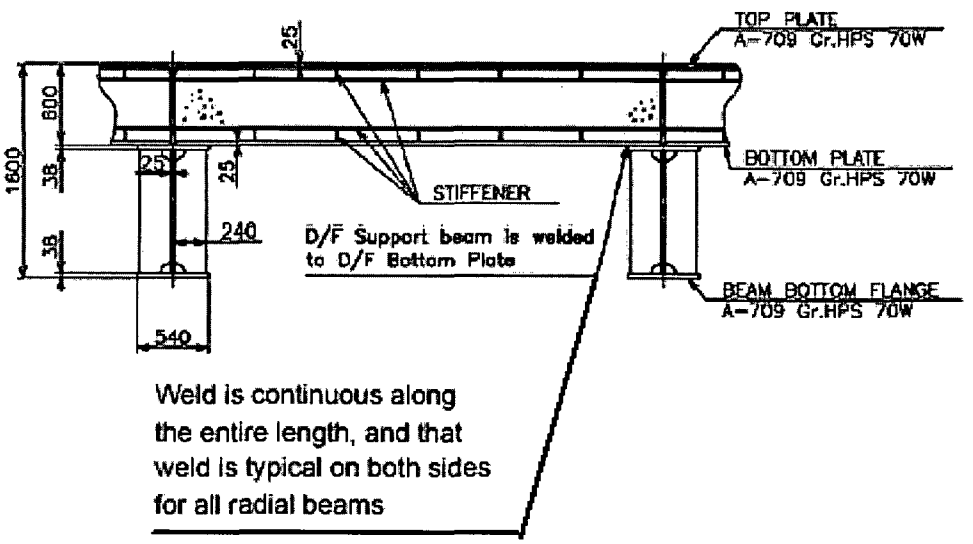

DCD Impact

DCD Tier 2 Figure 3G.1-55 will be revised in the next update as noted in the attached markup.

NRC RAI 3.8-64

DCD Section 3.8.4.1.2 states that the CB frame members such as beams or columns are designed to resist vertical loads and to accommodate deformations of the walls in case of earthquake conditions. A similar statement appears in Section 3.8.4.1.3 for the Fuel building and Section 3.8.4.1.4 for the Emergency Breathing Air system (EBAS) Building. Provide the structural design criteria, including the deformation limits, used to design these frame members.

Include this information in DCD Section 3.8.4 and/or Appendix 3G. In addition, (1) identify the applicable detailed report/calculation (number, title, revision and date, and brief description of content) that will be available for audit by the staff, and (2) reference this report/calculation in the DCD.

GE Response

Frame members are explicitly included in the 3D NASTRAN model. As a result, the interaction with building walls and slabs are automatically accounted for in the analysis. The criterion of frame members is presented in DCD Section 3.8.4.5 Structural Acceptance Criteria.

(1) The applicable detailed report/calculation that will be available for NRC audit is 26A6655, FB Structural Design Report, Revision 1, November 2005, containing the structural design details of the Fuel Building.

(2) Since this information exists as part of GE internal tracking system, it is not necessary to add it to the DCD submittal to the NRC.

No DCD change was made in response to this RAI.

NRC RAI 3.8-64, Supplement 1

Additional topics discussed at audit

a) *GE to include supplemental response given at the audit in this RAI response. GE needs to strengthen the response regarding why deformations for design loads are not strictly performed. Need to characterize the term "not so large" and broaden the response to address all frame members.*

b) *Clarify RAI response as follows:*

- *Add a subsection to DCD under 3.8.4.5 describing the EBAS building.*
- *Add note stating that Column deflection does not control the design.*

GE Response

a) Supplemental response is provided below regarding frame members and deformation under design loads:

Design Criteria for Frame Members

1. Reinforced Concrete Members

Structural design of reinforced concrete frame members is performed in accordance with ACI 349-01 "Code Requirements for Nuclear Safety Related Concrete Structures."

It is confirmed that section forces and moments generated in members for design load combinations do not exceed the design strengths specified in ACI 349-01 as follows including strength reduction factors:

- Strength reduction factor: ACI 349-01, Section 9.3
- Flexure and axial loads: ACI 349-01, Chapter 10
- Shear: ACI 349-01, Chapter 11

2. Steel Members

Structural design of steel frame members is performed in accordance with ANSI/AISC N690-1994s2 (2004) "Specification for the Design, Fabrication, and Erection of Steel Safety-Related Structures for Nuclear Facilities."

It is confirmed that stresses generated in members for design load combinations do not exceed the allowable stresses specified in ANSI/AISC N690-1994s2 (2004) as follows:

- Tension: ANSI/AISC N690-1994s2 (2004), Section Q1.5.1.1
- Shear: ANSI/AISC N690-1994s2 (2004), Section Q1.5.1.2
- Compression: ANSI/AISC N690-1994s2 (2004), Section Q1.5.1.3
- Bending: ANSI/AISC N690-1994s2 (2004), Section Q1.5.1.4

- Combined stresses: ANSI/AISC N690-1994s2 (2004), Section Q1.6

3. Deformation Limit

The RB, FB and CB are described in Section 3.8.4.1 of the DCD. Since they are relatively rigid shear-wall type of buildings, deformations due to basic design loads are small. Calculated deformations due to seismic loads are also very small, as shown in Figures 3.8-64 (1) and (2). Since the deformations are less than the allowable drift limits (see Table 5-2, ASCE 43-05), there is no need to perform any other analysis.

For concrete frame members, it is confirmed that their thicknesses satisfy the requirement for the minimum thickness specified in ACI 349-01, Section 9.5.1.1, Table 9.5 (b) for deflection control.

Column Row		Level EL (m)		Node ID		Displacement (NS; m)		Differential Disp.	Coodinate (Z; m)		Floor Hight	Basemat	Rotational Disp.	Actual Disp.	Angle
EW	NS	from	to	from	to	from	to	δd_0 (mm)	from	to	δh (m)	Rotation (rad)	δd_1 (mm)	$\delta d=\delta d_0-\delta d_1$ (mm)	$\delta d/\delta h$ (rad)
FD	F2	-11.50	-6.40	190205	91205	6.079E-02	6.900E-02	8.21	-11.50	-6.90	4.60	1.510E-03	6.95	1.26	1/3642
	F2	-6.40	-1.00	91205	92205	6.900E-02	7.863E-02	9.63	-6.90	-1.50	5.40	1.510E-03	8.16	1.47	1/3665
	F2	-1.00	4.65	92205	93205	7.863E-02	8.735E-02	8.71	-1.50	3.65	5.15	1.510E-03	7.78	0.94	1/5496
	F1	4.65	22.50	11829	14229	8.780E-02	1.237E-01	35.92	3.65	22.50	18.85	1.510E-03	28.47	7.45	1/2531
	F3	4.65	22.50	11918	14318	8.722E-02	1.234E-01	36.15	3.65	22.50	18.85	1.510E-03	28.47	7.68	1/2455

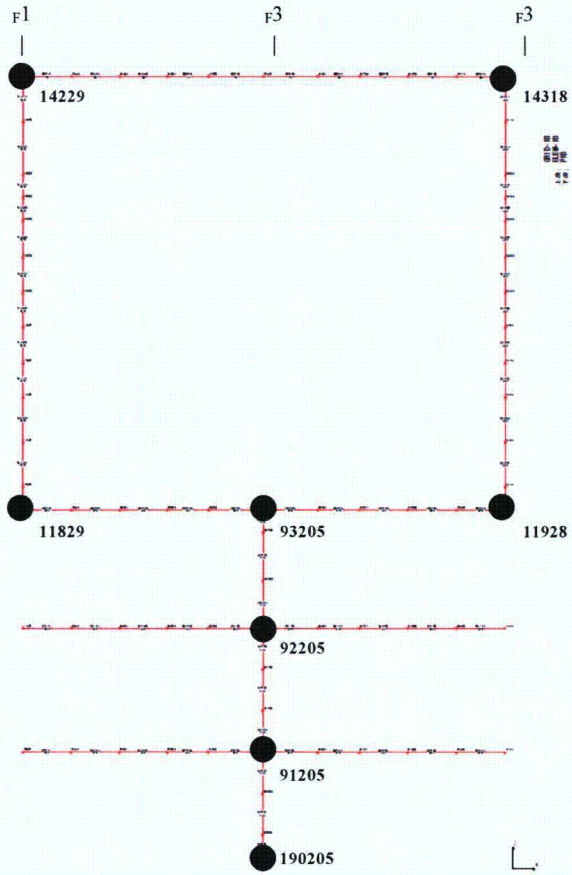

Figure 3.8-64 (1) Displacement of FB Frame Members due to Horizontal Seismic Load

Column Row		Level EL (m)		Node ID		Displacement (NS; m)		Differential Disp.	Coodinate (Z; m)		Floor Hight	Basemat	Rotational Disp.	Actual Disp.	Angle
EW	NS	from	to	from	to	from	to	δd_0 (mm)	from	to	δh (m)	Rotation (rad)	δd_1 (mm)	$\delta d=\delta d_0-\delta d_1$ (mm)	$\delta d/\delta h$ (rad)
C2	CB	-7.40	-2.00	582	2082	8.336E-03	1.211E-02	3.78	-7.40	-2.25	5.15	5.030E-04	2.59	1.19	1/4345
	CC	-7.40	-2.00	556	2056	8.339E-03	1.213E-02	3.79	-7.40	-2.25	5.15	5.030E-04	2.59	1.20	1/4293
	CB	-2.00	4.65	2082	3582	1.211E-02	1.732E-02	5.21	-2.25	4.30	6.55	5.030E-04	3.29	1.91	1/3423
	CC	-2.00	4.65	2056	3556	1.213E-02	1.732E-02	5.19	-2.25	4.30	6.55	5.030E-04	3.29	1.90	1/3451
	CB	4.65	9.06	3582	5082	1.732E-02	2.077E-02	3.45	4.30	8.81	4.51	5.030E-04	2.27	1.18	1/3818
	CC	4.65	9.06	3556	5056	1.732E-02	2.077E-02	3.45	4.30	8.81	4.51	5.030E-04	2.27	1.18	1/3827

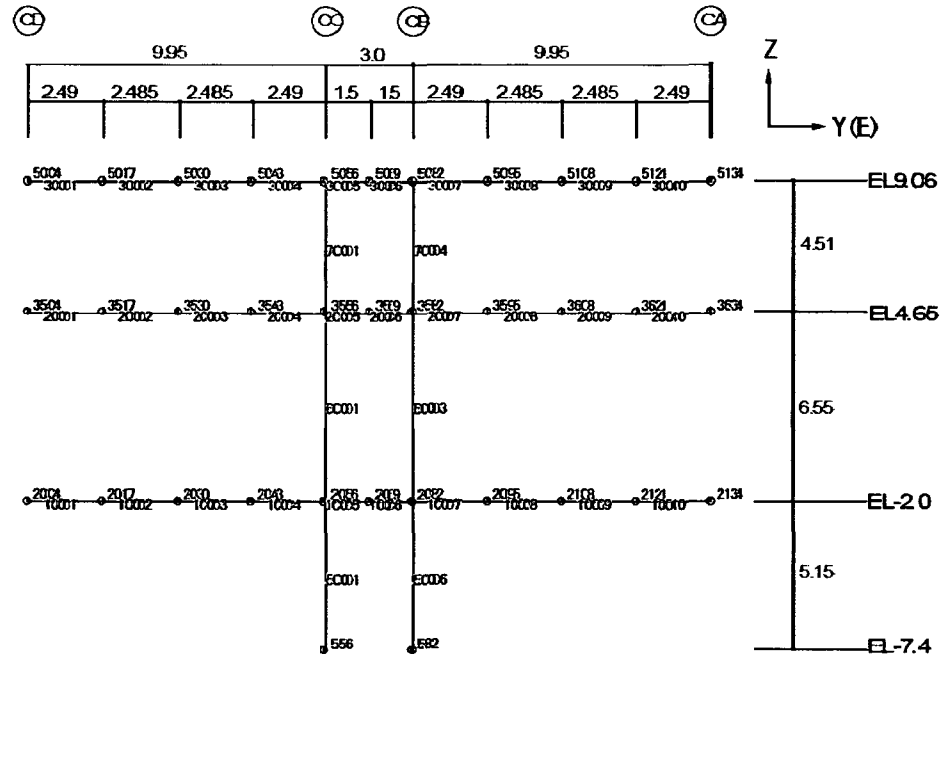

Figure 3.8-64 (2) Displacement of CB Frame Members due to Horizontal Seismic Load

b) Response to RAI 3.8-64 is clarified as shown below:

- New DCD subsections 3.8.4.2.6, 3.8.4.3.5, and 3.8.4.5.5 will be added and DCD subsection 3.8.4.4 will be revised in the next update as noted in the markups for EBAS descriptions provided under MFN 06-191S1.
- Column deflection is addressed in the supplemental response to Item a) above.

NRC RAI 3.8-64, Supplement 2

GE Additional Post Audit Action

Provide an evaluation of the RB/FB exterior walls for the automobile tornado missile.

GE Response

The evaluation of the automobile tornado missile was performed for the RB/FB exterior walls and roof slabs in accordance with SRP 3.5.1.4 to confirm that the walls and slabs are adequately designed to resist the tornado-generated automobile missile loads.

The impact load generated by an automobile missile was estimated by the method described in Reference 1. Using the estimated load, evaluations for punching shear and bending were performed.

As for punching shear, it was confirmed that shear due to the impact load is less than the punching shear strength calculated in accordance with ACI 349-01.

Bending moments due to the automobile missile were evaluated by the RB/FB global FE model analyses in which the impact loads were applied to several critical elements. The resulting bending moments in critical elements were combined with moments due to other loads including the tornado wind pressure, and it was confirmed that resultant moments do not exceed their bending capacities.

Therefore, it can be concluded that the RB/FB exterior walls and roof slab are adequately designed to resist the tornado-generated automobile missile loads.

Evaluation details are contained in Report SER-ESB-041, *Reactor Building/Fuel Building Automobile Tornado Missile Impact Assessment, Rev.0*, which is available for NRC review at GE offices.

No DCD change was made in response to this RAI supplement.

Reference 1: Topical Report BC-TOP-9A, *Design of Structures for Missile Impact, Revision 2,* Bechtel Power Corp., September 1974

NRC Assessment Following the December 14, 2006 Audit

NRC RAI 3.8-64 Supplement 3

GE needs to provide the technical justification for the reference to drift limits in Table 5-2 of ASCE 43-05 or demonstrate that the magnitude of the deformations for all frame members in the ESBWR design are sufficiently small so that they have a negligible impact on the design. If they choose to keep the reference to Table 5-2 of ASCE 43-05 as the basis for their response, GE will need to demonstrate that the imposition of the drift limits in Table 5-2 will have a negligible impact on the design of all frame members in the ESBWR design. GE needs to refer to SRP 3.5.3, as well as SRP 3.5.1.4 for the design to resist automobile missile loads. ESBWR DCD Section 3.5.3 does not reference BC-TOP-9A. If GE wants to use this topical report it should be referenced in DCD Section 3.5.3 and its use accepted by the NRC reviewer of this DCD section. Review GE Report SER-ESB-041 at the next audit. Has the large concrete wall (approx. 18m x 48m x 1m thick) in the fuel building been checked for missile impact loads?

During the audit, GE provided a draft supplemental response to address these issues. For the first paragraph above, GE will revise the response to explain that the effect of deformations are part of the analysis and design of the frame type structures. For the second paragraph, GE will revise Section 3.5.3 of the DCD to reference BC-TOP-9A, which will be evaluated under the review of that DCD section. For the third paragraph, GE indicated that they have evaluated the large concrete wall for missile impact loads. The summary of this evaluation is contained in GE report SER-ESB-041.

GE Response

The CB is framed with members and reinforced concrete walls for lateral bracing. Movements in the building are small and meet the linear-elastic requirements of C-I structures. The structural movements are part of the 3-D analysis done by NASTRAN and the total member stresses reflect those movements.

Movements were checked to verify that they are small as shown in NRC RAI 3.8-64 Supplement 1. The behavior of the structure is that of a shear-type building.

DCD Tier 2 Sections 3.5.3 and 3.5.1.4 already reference the SRP sections noted. Reference to *BC-TOP-9A* will be added to DCD Tier 2 Section 3.5.5 in the next update as noted in the attached markup.

DCD Impact

DCD Tier 2 Section 3.5.5 will be revised in the next update as noted in the attached markup.

NRC RAI 3.8-87

Section 3.8.5.4 indicates that the design of the RB/FB foundation mat involves determining shear and bending moments of the substructure, including interaction of the basemat with the underlying foundation materials. However, DCD Section 3.7 indicates that dynamic analyses are performed using simplified frequency-independent impedance functions, which implies that the dynamic analyses are performed using rigid base assumptions. DCD Section 3.8.5 or Appendix 3G needs to describe the procedures that are employed to determine the bending moments induced in the basemat under applied seismic loads.

Include this information in DCD Section 3.8.3 and/or Appendix 3G. In addition, (1) identify the applicable detailed report/calculation (number, title, revision and date, and brief description of content) that will be available for audit by the staff, and (2) reference this report/calculation in the DCD.

GE Response

Bending moments induced in the foundation mat are calculated by 3D-NASTRAN static analyses for all design loads including seismic loads.

In the NASTRAN model, the foundation mat is modeled using thick shell elements as described in the response to the RAI 3.8-100, and soil springs corresponding to soft soil are attached to the foundation mat in order to represent the stiffness of underlying foundation soil, as described in DCD Appendix 3G.1.4.2. Figure 3.8-87(1) shows the detail of the basemat portion of the NASTRAN model.

Under seismic loads, the foundation mat resists out-of-plane forces applied from superstructures and foundation soil. Bending moments in the foundation mat are evaluated for the resultant out-of-plane forces.

(1) The applicable detailed report/calculation that will be available for NRC audit is 26A6651, RB Structural Design Report, Revision 1, November 2005, containing the structural design details of the Reactor Building.

(2) Since this information exists as part of GE internal tracking system, it is not necessary to add it to the DCD submittal to the NRC.

Markups of DCD Tier 2 Section 3.8.5.4 were provided in MFN 06-191.

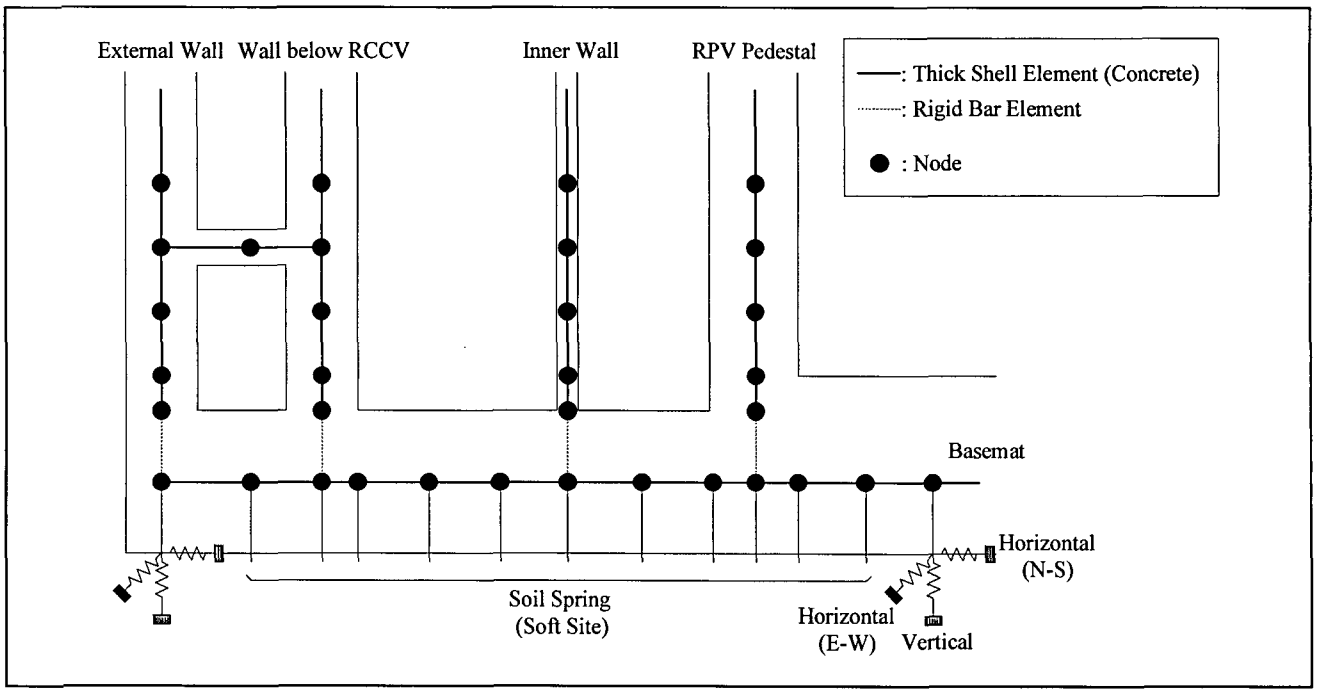

Figure 3.8-87(1) Details of the Basemat Portion of the NASTRAN Model

NRC RAI 3.8-87, Supplement 1

Additional topics discussed at audit

GE to provide the total load on the foundation in the NASTRAN analysis due to seismic effects and compare them to the total loads on the rigid foundation obtained in the seismic analysis.

GE Response

Total loads applied in the NASTRAN analyses are compared with the design seismic loads in Table 3.8-87 (2) below:

Table 3.8-87 (2) Comparison of Design and NASTRAN Seismic Load

Items		Seismic Load	
		N-S Direction	E-W Direction
Design Shear Force	RB/FB	910.3	1031.7
	RCCV	252.2	304.2
	RPV Pedestal	100.8	121.5
Additional Shear Applied to Basemat*		445.0	539.4
Total		1708.3	1996.8
Total Applied Force in NASTRAN		1708.4	1996.9

Note *: Additional shear force is applied to the basemat to reproduce the maximum soil spring reaction obtained by the dynamic analysis.

No DCD change was made in response to this RAI supplement.

NRC RAI 3.8-87, Supplement 2

NRC Assessment Following the December 14, 2006 Audit

*This response needs to be coordinated with BNL's Confirmatory Analysis work. GE needs to explain the basis for the statement: "Note *: Additional shear force is applied to the basemat to reproduce the maximum soil spring reaction obtained by the dynamic analysis."*

During the audit, GE will revise their response to explain how the additional shear force applied to the basemat is calculated. In addition, GE will enhance the explanation given during the meeting to explain how they determined and applied the seismic stick model loads onto the NASTRAN model.

GE Response

The design shear forces applied to the NASTRAN model are taken directly from soil-structure interaction (SSI) analysis results using the stick model. Additional shear forces shown in Table 3.8-87(2) in NRC RAI 3.8-87, Supplement 1 response are obtained by multiplying the mat mass times its acceleration to match the total shear at the bottom of the basemat calculated from the SSI analysis.

The input moments are adjusted in NASTRAN to match the moments from the stick model results. The overturning moment applied to each story is determined in such a way that the sum of the applied moment and the one due to shear forces applied to the stories above is equal to or larger than the overturning moment obtained by SSI analysis. The moment is adjusted considering the difference between the height where the design seismic loads are defined and the height where the nodal forces are applied in the NASTRAN model. The calculation method is explained in Figure 3.8-87(3). Therefore, a compatible set of shears and moments for both models is maintained.

DCD Impact

No DCD change was made in response to this RAI Supplement.

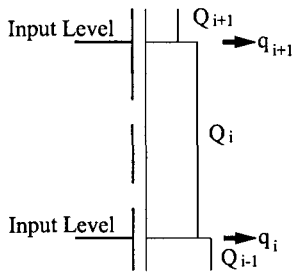

$q_i = Q_{i-1} - Q_i$

q_i : Input Shear Force at i-th Level

Q_i : Design Shear Force at i-th Level

Shear Force

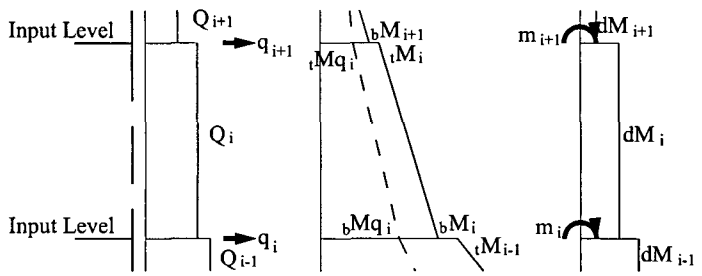

$m_i = dM_{i-1} - dM_i$

m_i : Input Moment at i-th Story

dM_i : Additional Moment at i-th Story

$dM_i = \max((_tM_i - _tMq_i), (_bM_i - _bMq_i))$

$_tM_i$: Design Moment at the top of i-th Story

$_bM_i$: Design Moment at the bottom of i-th Story

$_tMq_i$: Moment due to Shear at the top of i-th Story

$_bMq_i$: Moment due to Shear at the bottom of i-th Story

Moment

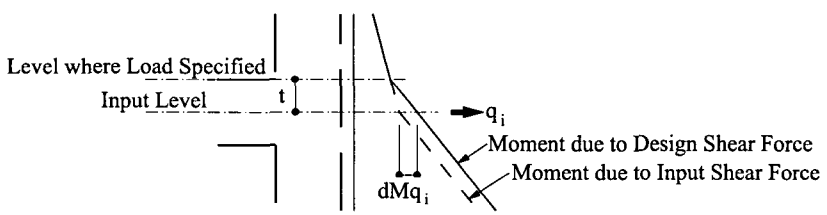

$dMq_i = t \times q_i$

Modification of Moments Considering the Difference in Input Levels

Figure 3.8-87(3) Calculation of Applied Shear Forces and Moments

NRC RAI 3.8-90

DCD Section 3.8.5.4 indicates that the foundations are evaluated for the worst resulting forces from the superstructure, but does not indicate how the worst-case scenario is to be determined. DCD Section 3.8.5.4 needs to indicate the procedures being used to evaluate the worst conditions.

In addition, (1) identify the applicable detailed report/calculation (number, title, revision and date, and brief description of content) that will be available for audit by the staff, and (2) reference this report/calculation in the DCD.

GE Response

The worst-case scenario for foundation basemat design is the soft soil since it is subject to largest deformation. From the NASTRAN analysis the results are scanned for the worst loads in the mat sections and are selected for checking the section. This enveloping of most severe loading is done for all loading considered in the analysis.

(1) The applicable detailed report/calculation that will be available for NRC audit is 26A6651, RB Structural Design Report, Revision 1, November 2005, containing the structural design details of the Reactor Building.

(2) Since this information exists as part of GE internal tracking system, it is not necessary to add it to the DCD submittal to the NRC.

Markups of DCD Section 3.8.5.4 were provided in MFN 06-191.

NRC RAI 3.8-90, Supplement 1

Additional topics discussed at audit

a) GE should refer to information in RAI 3.8-13, Supplement 1 for response to this RAI.

b) GE should consider non-uniform soil conditions under the mat. Such studies were done for AP600

GE Response

a) Response provided to RAI 3.8-13, Supplement 1 shows the deformation and stresses of basemat in both cases for soft and hard soil conditions to demonstrate the conservatism in the basemat design.

b) This request is similar to additional topics of RAI 3.8-13, Supplement 1. The discussion about non-uniform soil condition under the mat will be provided in response to RAI 3.8-94 due to the NRC by October 31, 2006.

No DCD change was required in response to this RAI Supplement.

NRC RAI 3.8-90, Supplement 2

NRC Assessment Following the December 14, 2006 Audit

Linked to RAIs 3.8-13 and 3.8-94. See staff assessments of RAIs 3.8-13 and 3.8-94

During the audit, it was agreed to address this issue under RAIs 3.8-13 and –96.

GE Response

See response to NRC RAIs 3.8-13 and 3.8-96.

DCD Impact

No DCD change was required in response to this RAI Supplement.

NRC RAI 3.8-91

DCD Section 3.8.5.4 states that the foundations are analyzed using "well-established methods". Identify the references for and describe the "well-established methods" used to analyze the foundations. Demonstrate conformance of these methods with the requirements of SRP 3.8.5. Include this information in DCD Section 3.8.5.4.

In addition, (1) identify the applicable detailed report/calculation (number, title, revision and date, and brief description of content) that will be available for audit by the staff, and (2) reference this report/calculation in the DCD.

GE Response

As described in DCD Section 3.8.1.4.1.1, the linear elastic finite element (FE) model is used for the analyses of the building structures including the foundation mat, and the foundation soil is modeled with elastic springs in the FE model. The modeling method is the same as the ABWR standard design which was reviewed and approved by the NRC; hence it is considered to be a well-established method.

SRP 3.8.5 II 4.a. requires that the soil-structure interaction be considered in the seismic Category I foundation design, and the method mentioned above satisfies this SRP requirement.

(1) The applicable detailed report/calculation that will be available for NRC audit is 26A6651, RB Structural Design Report, Revision 1, November 2005, containing the structural design details of the Reactor Building.

(2) Since this information exists as part of GE internal tracking system, it is not necessary to add it to the DCD submittal to the NRC.

Markups of DCD Section 3.8.5.4 were provided in MFN 06-191.

NRC RAI 3.8-91, Supplement 1

Additional topics discussed at audit

a) GE is requested to:

- *Review details of mat design and determine what additional information to incorporate in the DCD to describe the "well-established" methods.*
- *Add supplemental response regarding Comment #3 under "RAI 3.8-12 SSDP Validation".*

In addition, in order to confirm the size and quantity of designed steel reinforcement, the total factored moment and shear forces are needed by the NRC audit team. This information was not included in RB Structural Design Report (26A6651 Rev. 1). Please:

- *Provide this information for the three identified critical elements and demonstrate how the individual load cases are combined to arrive at the total loads and how these total loads are applied to the critical sections.*

b) GE to provide more description of how the mat is designed, including how the loads from walls are transferred to the mat.

GE Response

a) See below:

- The "well-established methods" is an ambiguous statement, and it will be removed from the DCD. Markups of DCD Section 3.8.5.4 were provided in MFN 06-191 Supplement 1.
- For supplemental response regarding Comment (a) second bullet, refer to the response to the new RAI 3.8-107 "SSDP Validation" due to the NRC by October 31, 2006.
- Information requested by NRC for its confirmatory analysis is shown below:

i. Combined Section Forces and Moments

Table 3.8-91 (1) shows the combined section forces and moments of the basemat elements, which was requested by NRC.

Table 3.8-91 (1) Combined Section Forces and Moments of Basemat Element

ELEM	90140	Nx (MN/m)	Ny (MN/m)	Nxy (MN/m)	Mx (MNm/m)	My (MNm/m)	Mxy (MNm/m)	Qx (MN/m)	Qy (MN/m)
7511	OTHR	-3.415	-2.849	-0.232	-2.240	-1.158	2.916	-1.891	1.734
	TEMP	1.628	1.213	0.456	-8.677	-9.122	0.629	-0.482	0.827
	EQEW	0.415	4.638	2.888	0.033	3.216	-2.595	2.865	-5.032
	EQNS	0.034	1.460	-2.130	-6.707	-0.901	-0.370	-2.810	1.163
	EQZ	-0.060	0.480	0.263	1.419	0.971	-2.078	0.964	-1.107
	EQT	0.965	-0.447	0.984	0.658	0.012	-0.229	0.294	0.106
	SPKW	-0.052	-1.084	-0.003	-0.119	0.019	-0.123	-0.029	-0.213
	SPKN	-1.849	0.114	-0.120	-0.044	-0.045	0.049	-0.037	0.017
7111	OTHR	-3.187	-2.730	-0.181	-1.424	-0.643	1.411	-2.191	1.945
	TEMP	1.625	1.228	0.485	-8.737	-9.165	0.608	-0.528	0.838
	EQEW	0.415	4.638	2.888	0.033	3.216	-2.595	2.865	-5.032
	EQNS	0.034	1.460	-2.130	-6.707	-0.901	-0.370	-2.810	1.163
	EQZ	-0.060	0.480	0.263	1.419	0.971	-2.078	0.964	-1.107
	EQT	0.965	-0.447	0.984	0.658	0.012	-0.229	0.294	0.106
	SPKW	-0.052	-1.084	-0.003	-0.119	0.019	-0.123	-0.029	-0.213
	SPKN	-1.849	0.114	-0.120	-0.044	-0.045	0.049	-0.037	0.017
7431	OTHR	-2.939	-2.620	-0.036	-1.925	-0.968	1.516	-2.457	2.177
	TEMP	1.517	1.526	0.904	-9.928	-10.235	0.483	-1.089	1.095
	EQEW	0.415	4.638	2.888	0.033	3.216	-2.595	2.865	-5.032
	EQNS	0.034	1.460	-2.130	-6.707	-0.901	-0.370	-2.810	1.163
	EQZ	-0.060	0.480	0.263	1.419	0.971	-2.078	0.964	-1.107
	EQT	0.965	-0.447	0.984	0.658	0.012	-0.229	0.294	0.106
	SPKW	-0.052	-1.084	-0.003	-0.119	0.019	-0.123	-0.029	-0.213
	SPKN	-1.849	0.114	-0.120	-0.044	-0.045	0.049	-0.037	0.017
7441	OTHR	-2.939	-2.620	-0.036	-1.925	-0.968	1.516	-2.457	2.177
	TEMP	0.656	1.198	1.910	-1.176	-1.209	-0.620	-1.549	0.481
	EQEW	0.415	4.638	2.888	0.033	3.216	-2.595	2.865	-5.032
	EQNS	0.034	1.460	-2.130	-6.707	-0.901	-0.370	-2.810	1.163
	EQZ	-0.060	0.480	0.263	1.419	0.971	-2.078	0.964	-1.107
	EQT	0.965	-0.447	0.984	0.658	0.012	-0.229	0.294	0.106
	SPKW	-0.052	-1.084	-0.003	-0.119	0.019	-0.123	-0.029	-0.213
	SPKN	-1.849	0.114	-0.120	-0.044	-0.045	0.049	-0.037	0.017

Table 3.8-91 (1) Combined Section Forces and Moments of Basemat Element (Continued)

ELEM	90182	Nx (MN/m)	Ny (MN/m)	Nxy (MN/m)	Mx (MNm/m)	My (MNm/m)	Mxy (MNm/m)	Qx (MN/m)	Qy (MN/m)
7221	OTHR	-2.103	-2.317	-0.223	-0.372	-1.614	0.181	0.061	1.376
	TEMP	2.148	0.503	0.511	-0.337	-3.646	0.149	-0.116	2.707
	EQEW	6.054	0.571	0.309	0.153	-0.445	-0.242	-0.046	-3.502
	EQNS	3.163	0.701	-1.456	-1.619	-0.476	1.390	-1.659	0.675
	EQZ	0.369	0.221	0.046	-0.592	1.442	0.238	-0.137	-0.399
	EQT	1.000	0.064	0.515	0.020	0.260	-0.335	0.346	-0.258
	SPKW	0.120	-1.176	-0.143	-0.170	-0.632	-0.021	0.026	-0.440
	SPKN	-1.507	0.096	0.137	-0.018	-0.210	0.106	-0.110	0.162
7431	OTHR	-2.241	-2.358	-0.196	-0.265	-1.324	0.195	0.018	1.146
	TEMP	1.042	0.028	-0.059	-8.769	-10.526	0.078	0.104	3.415
	EQEW	6.054	0.571	0.309	0.153	-0.445	-0.242	-0.046	-3.502
	EQNS	3.163	0.701	-1.456	-1.619	-0.476	1.390	-1.659	0.675
	EQZ	0.369	0.221	0.046	-0.592	1.442	0.238	-0.137	-0.399
	EQT	1.000	0.064	0.515	0.020	0.260	-0.335	0.346	-0.258
	SPKW	0.120	-1.176	-0.143	-0.170	-0.632	-0.021	0.026	-0.440
	SPKN	-1.507	0.096	0.137	-0.018	-0.210	0.106	-0.110	0.162

Table 3.8-91 (1) Combined Section Forces and Moments of Basemat Element (Continued)

ELEM	90111	Nx (MN/m)	Ny (MN/m)	Nxy (MN/m)	Mx (MNm/m)	My (MNm/m)	Mxy (MNm/m)	Qx (MN/m)	Qy (MN/m)
7431	OTHR	-3.906	-1.826	0.005	-1.720	-0.144	-0.354	0.499	0.271
	TEMP	0.321	0.885	-0.123	-10.119	-9.107	-0.050	3.448	0.174
	EQEW	-0.250	0.765	-0.889	-0.470	0.409	1.439	-0.060	-2.916
	EQNS	1.027	5.920	-0.258	0.380	-1.228	0.393	-2.033	-0.131
	EQZ	0.246	0.490	-0.027	1.301	-0.708	0.327	-0.439	-0.071
	EQT	-0.052	0.035	-0.613	-0.075	0.084	0.414	0.010	-0.492
	SPKW	0.162	-1.308	0.049	-0.226	-0.098	0.013	0.201	-0.026
	SPKN	-1.233	0.065	-0.048	-0.638	-0.141	0.024	-0.484	0.020
7421	OTHR	-3.906	-1.826	0.005	-1.720	-0.144	-0.354	0.499	0.271
	TEMP	0.739	3.121	-0.053	-5.526	-1.300	0.126	3.843	0.163
	EQEW	-0.250	0.765	-0.889	-0.470	0.409	1.439	-0.060	-2.916
	EQNS	1.027	5.920	-0.258	0.380	-1.228	0.393	-2.033	-0.131
	EQZ	0.246	0.490	-0.027	1.301	-0.708	0.327	-0.439	-0.071
	EQT	-0.052	0.035	-0.613	-0.075	0.084	0.414	0.010	-0.492
	SPKW	0.162	-1.308	0.049	-0.226	-0.098	0.013	0.201	-0.026
	SPKN	-1.233	0.065	-0.048	-0.638	-0.141	0.024	-0.484	0.020
7321	OTHR	-3.906	-1.826	0.005	-1.720	-0.144	-0.354	0.499	0.271
	TEMP	0.639	2.711	-0.049	-4.654	-0.922	0.098	3.296	0.146
	EQEW	-0.250	0.765	-0.889	-0.470	0.409	1.439	-0.060	-2.916
	EQNS	1.027	5.920	-0.258	0.380	-1.228	0.393	-2.033	-0.131
	EQZ	0.246	0.490	-0.027	1.301	-0.708	0.327	-0.439	-0.071
	EQT	-0.052	0.035	-0.613	-0.075	0.084	0.414	0.010	-0.492
	SPKW	0.162	-1.308	0.049	-0.226	-0.098	0.013	0.201	-0.026
	SPKN	-1.233	0.065	-0.048	-0.638	-0.141	0.024	-0.484	0.020
7441	OTHR	-3.906	-1.826	0.005	-1.720	-0.144	-0.354	0.499	0.271
	TEMP	0.765	3.129	-0.048	-5.573	-1.340	0.131	3.888	0.160
	EQEW	-0.250	0.765	-0.889	-0.470	0.409	1.439	-0.060	-2.916
	EQNS	1.027	5.920	-0.258	0.380	-1.228	0.393	-2.033	-0.131
	EQZ	0.246	0.490	-0.027	1.301	-0.708	0.327	-0.439	-0.071
	EQT	-0.052	0.035	-0.613	-0.075	0.084	0.414	0.010	-0.492
	SPKW	0.162	-1.308	0.049	-0.226	-0.098	0.013	0.201	-0.026
	SPKN	-1.233	0.065	-0.048	-0.638	-0.141	0.024	-0.484	0.020

ii. Description of the Combination Method of Section Forces and Moments Utilized (example)

Reference 1: 26A6651 "Reactor Building Structural Design Report", Rev. 1

1. Section Forces and Moments

ELEM	90140	Nx (MN/m)	Ny (MN/m)	Nxy (MN/m)	Mx (MNm/m)	My (MNm/m)	Mxy (MNm/m)	Qx (MN/m)	Qy (MN/m)
7511	OTHR	-3.415	-2.849	-0.232	-2.240	-1.158	2.916	-1.891	1.734
	TEMP	1.628	1.213	0.456	-8.677	-9.122	0.629	-0.482	0.827
	EQEW	0.415	4.638	2.888	0.033	3.216	-2.595	2.865	-5.032
	EQNS	0.034	1.460	-2.130	-6.707	-0.901	-0.370	-2.810	1.163
	EQZ	-0.060	0.480	0.263	1.419	0.971	-2.078	0.964	-1.107
	EQT	0.965	-0.447	0.984	0.658	0.012	-0.229	0.294	0.106
	SPKW	-0.052	-1.084	-0.003	-0.119	0.019	-0.123	-0.029	-0.213
	SPKN	-1.849	0.114	-0.120	-0.044	-0.045	0.049	-0.037	0.017

Nomenclature:

OTHR: Loads other than thermal and seismic loads
TEMP: Thermal loads
EQEW: Horizontal seismic loads in the EW direction
EQNS: Horizontal seismic loads in the NS direction
EQZ: Vertical seismic loads
EQT: Torsional seismic loads
SPKW: Dynamic soil pressure during a horizontal earthquake in the EW direction
SPKN: Dynamic soil pressure during a horizontal earthquake in the NS direction
(Ref. 1, Section 6.3.3)

2. Combination of Section Forces and Moments

- Ref. 1, Table 6.3.2-2
- Combination of Seismic Loads: Ref. 1, Table 6.3.2-4

Example of combination of Nx for Load ID 7511, Seismic Case 1

1.0*OTHR + 1.0*EQEW + 0.4*EQNS + 0.4*EQZ + 1.0*EQT + 1.0*SPKW + 0.4*SPKN
= 1.0*-3.415 + 1.0*0.415 + 0.4*0.034S + 0.4*-0.06 + 1.0*0.965 + 1.0*-0.052 + 0.4*-1.849
= -2.837

Notes:

- Factors for seismic loads shall be in accordance with Ref. 1, Table 6.3.2-4
- Load factor for OTHR shall be 1.0. Factors of loads other than thermal and seismic loads, i.e., dead, live, pressure, wind, tornado, in Ref. 1, Table 6.3.2-2 have been already considered in calculations of section forces and moments for OTHR.
- Section forces and moments for thermal loads should be combined separately considering reduction due to concrete cracking.

b) Loads from the walls are transferred to the mat by means of rigid links as shown in Figure 3.8-87 (1) and is included in the global NASTRAN model. The stress resultants (forces, moments, etc) of the mat are extracted from the mat shell elements (see Table 3.8-91 (1)), and used as input to the concrete cracking analysis performed by the SSDP computer program. The output is a tabulation of stresses in concrete and rebars and a list of allowable stresses. The format of the output is similar to that of Table 3.8-82 (3).

NRC RAI 3.8-91, Supplement 2

GE Additional Post Audit Action

Demonstrate that adequate development length for the reinforcement is provided.

GE Response

In the basemat around the cylindrical wall below the RCCV wall, rebars in two coordinate systems, i.e., orthogonal and cylindrical coordinates, are installed. Circumferential rebars are continuous. Other rebars are terminated at the end after assuring required development length. (See Figure 3.8-91 (1).) In section design calculations, orthogonal rebars and radial rebars are evaluated for adequate development length.

No DCD changes was made in response to this RAI supplement.

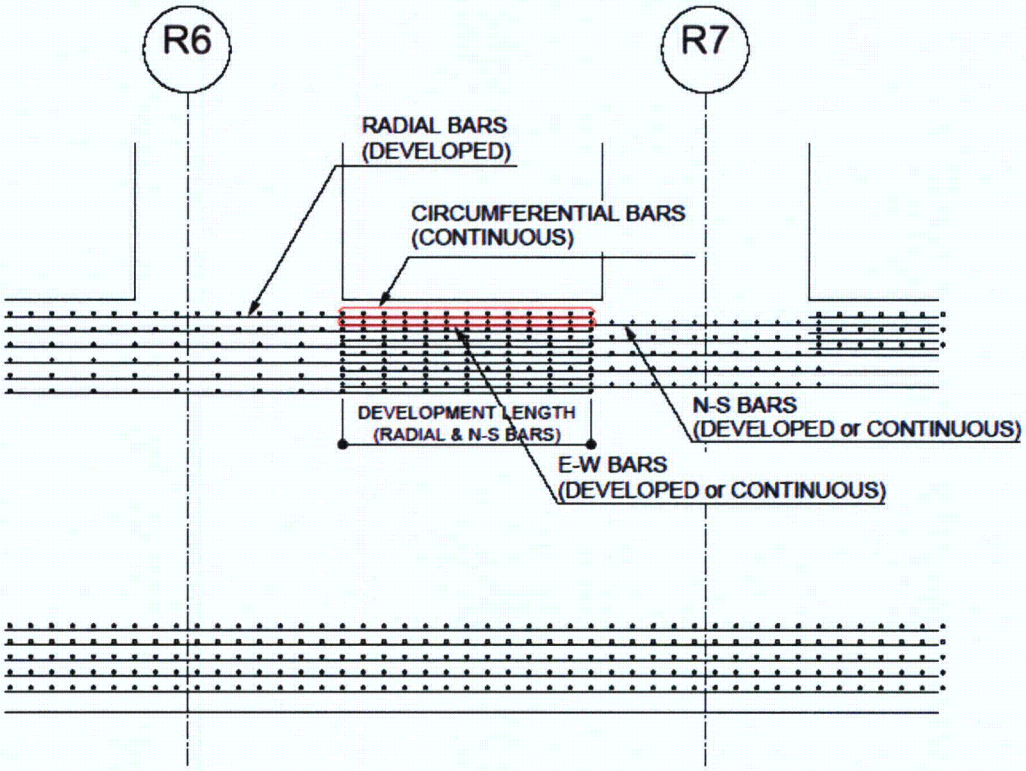

Figure 3.8-91 (1) Rebar Arrangement in Basemat around Cylindrical Wall below RCCV

NRC RAI 3.8-91, Supplement 3

NRC Assessment Following the December 14, 2006 Audit

GE needs to provide a copy of the complete markup for DCD Section 3.8.5.4 (the submittal only includes page 3.8-36 and ends in an incomplete sentence). To complete the review of this RAI requires GE's response to RAI 3.8-107 and the confirmatory analysis results. GE should have the design calculations related to this RAI available for review at the next audit. Discussion of development length in Supplement 2 is acceptable.

During the audit, GE indicated that the complete markup has been included in DCD Rev. 2. The resolution of this RAI is dependent upon the resolution of GE's response to RAI 3.8-107.

GE Response

DCD Tier 2 Revision 2 Section 3.8.5.4 includes the complete updates discussed above. For further discussion, see response to NRC RAI 3.8-107.

DCD Impact

No DCD change was made in response to this RAI Supplement.

NRC RAI 3.8-100

DCD Figure 3G.1-9 shows the finite element (FE) Model of RB/FB Foundation Mat. Describe the type of finite elements used to model the foundation mat. Are they classical thin plate/shell type elements that have only membrane and bending behavior, or are they "thick shell" elements that also account for shear deformation also? How is the transition between the 5.1 meters and the 4 meters portions of the mat modeled? Given the thickness of the foundation mat identified in Table 3.8-13 (5.1 and 4 meters), provide the technical basis for using plate/shell type elements.

Include this information in DCD Appendix 3G. In addition, (1) identify the applicable detailed report/calculation (number, title, revision and date, and brief description of content) that will be available for audit by the staff, and (2) reference this report/calculation in the DCD.

GE Response

The type of finite elements used to model the foundation mat is the thick shell type of elements which account for out-of-plane shear deformation also.

In the NASTRAN model and in the section design calculations, the thickness of basemat shell elements is set to 4.0 m uniformly. At the central portion of the mat where the thickness is 5.1 m, the extra 1.1 m is neglected for conservatism because this region is fully constrained by the RPV pedestal and is limited in size as compared to the total mat. Furthermore, this extra thickness is treated as a non-load carrying element. However, the thickened region of the mat is considered in the temperature distribution analysis to evaluate the design temperature of the central portion of the basemat.

(1) The applicable detailed report/calculation that will be available for NRC audit is 26A6651, RB Structural Design Report, Revision 1, November 2005, containing the structural design details of the Reactor Building.

(2) Since this information exists as part of GE internal tracking system, it is not necessary to add it to the DCD submittal to the NRC.

Markups of DCD Section 3.8.5.4 were provided in MFN 06-191.

NRC RAI 3.8-100, Supplement 1

Additional topics discussed at audit

Please include supplemental response given at the audit in RAI response, and perform a check of what does the 5.1 m portion does to the structural behavior of the mat. Make some sample runs to show it is conservative to neglect it in the analysis. Show reinforcement details for the thickened portion.

GE Response

Supplemental response requested is provided below with modifications to meet the additional topic discussed at the audit. It includes the sample runs, and shows that the assumption of the thickness of basemat as 4.0 m is adequate.

The top surface of the thickened portion will be reinforced by small diameter rebars such as #5, to prevent the development of concrete cracking. The details of the rebar arrangement will be determined in the detail design phase.

No DCD change was made in response to this RAI Supplement.

Assumption of the NASTRAN basemat model

1. Basis of DCD design

In the current DCD design, basemat rebars are arranged in a straight line at the region of the RCCV center. (See Figure 3.8-100 (1).) In this rebar arrangement, concrete located far from top rebars such as under the lower drywell is conservatively neglected in the structural design. This concrete would be poured after the completion of basemat and RPV pedestal structural components.

As an alternate design, these rebars may be raised at the lower drywell portion of the mat under the RPV, as shown in Figure 3.8-100 (2). In this case, the rebars arranged at the RCCV center must be bent and anchored vertically at their ends. For this arrangement, the thickness of 5.1m can be used for the structural design.

However, there are the following concerns regarding this rebar arrangement:

- Stresses in the top rebars at the RCCV center may not adequately transfer stresses to the surrounding structures.
- The section adjacent to the RPV pedestal (circled in Figure 3.8-100 (2)) is very congested by rebars. It may lead to the deterioration of quality.

In light of these concerns, the arrangement shown in Figure 3.8-100 (1) was selected for the DCD design.

Accordingly, the basemat thickness at the RCCV center is conservatively taken as 4.0 m in the structural design as in other portions.

The concerned region is fully constrained by the thick cylindrical wall, i.e., RPV pedestal, and is limited in size as compared to the total basemat as shown in Figure 3.8-100 (3). Therefore, the effects of this conservatism are negligible.

2. Analytical check

To confirm the conservatism of this assumption regarding the thickness of the center portion of basemat in the NASTRAN model, a sample calculation was performed. Two models are provided, one has 4 m thickness and other has 5.1 m thickness on the inside area of RPV pedestal. The former one is the same as DCD design. Figure 3.8-100 (4) shows sectional deformation of basemat under dead loads. The difference between them is small.

Figure 3.8-100 (5) compares bending moment generated in both cases. The influence from the difference of thickness is limited to the region inside the pedestal. Bending moments increase almost 30 % at the center. This is due to the larger basemat thickness at the center. This increased moment is resisted by a thicker section of 5.1 m in depth. Since the effective height of the section used for design (4 m) in the calculations also increases by almost 30 %, the impact of the difference in basemat thickness in the NASTRAN model is negligible.

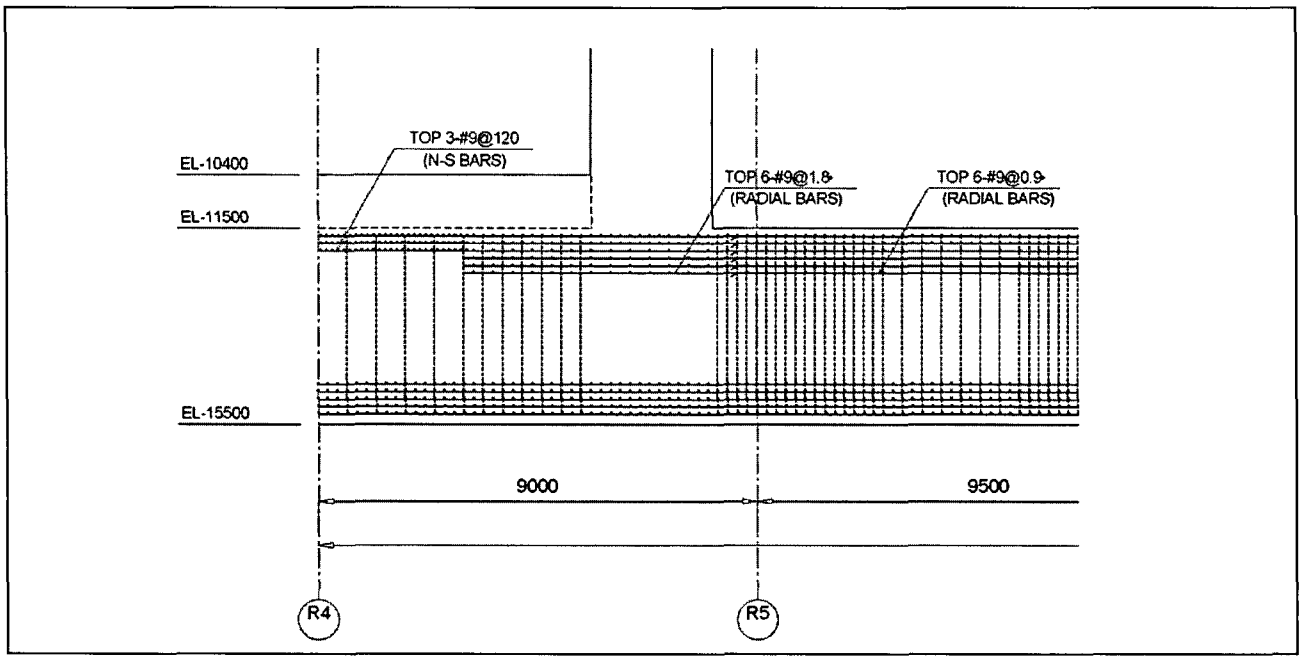

Figure 3.8-100 (1) Section of Basemat (DCD Design)

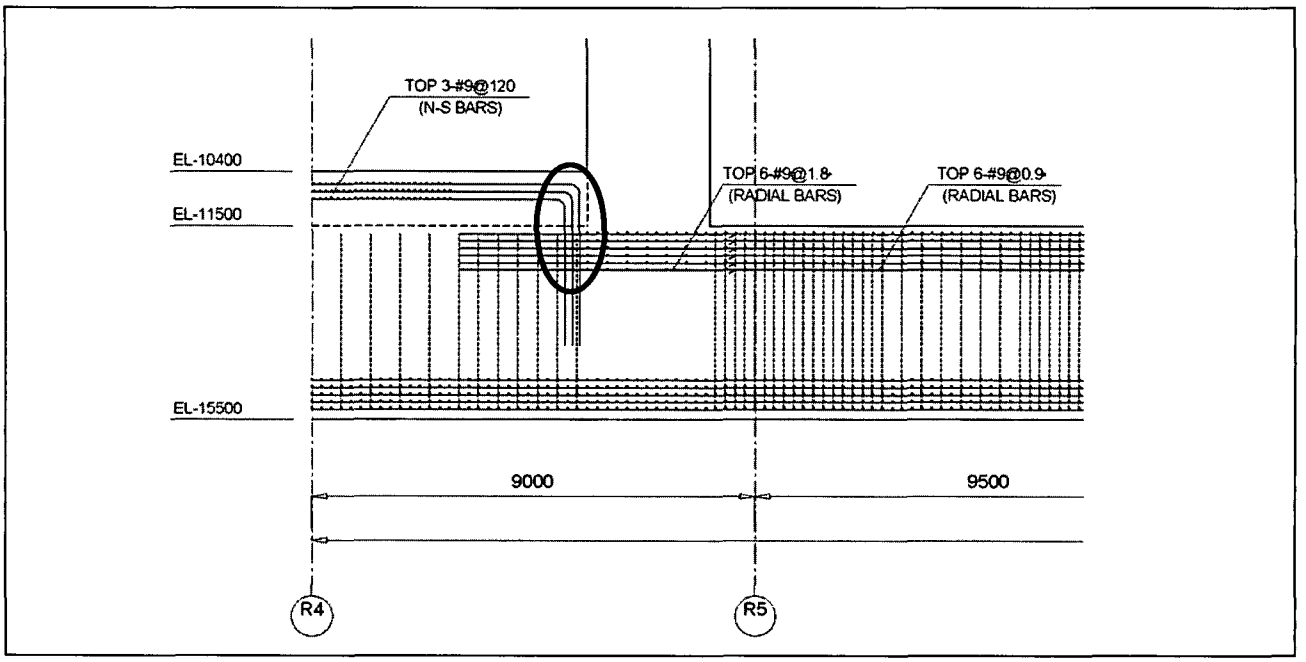

Figure 3.8-100 (2) Section of Basemat (Rebars at RCCV Center Are Raised)

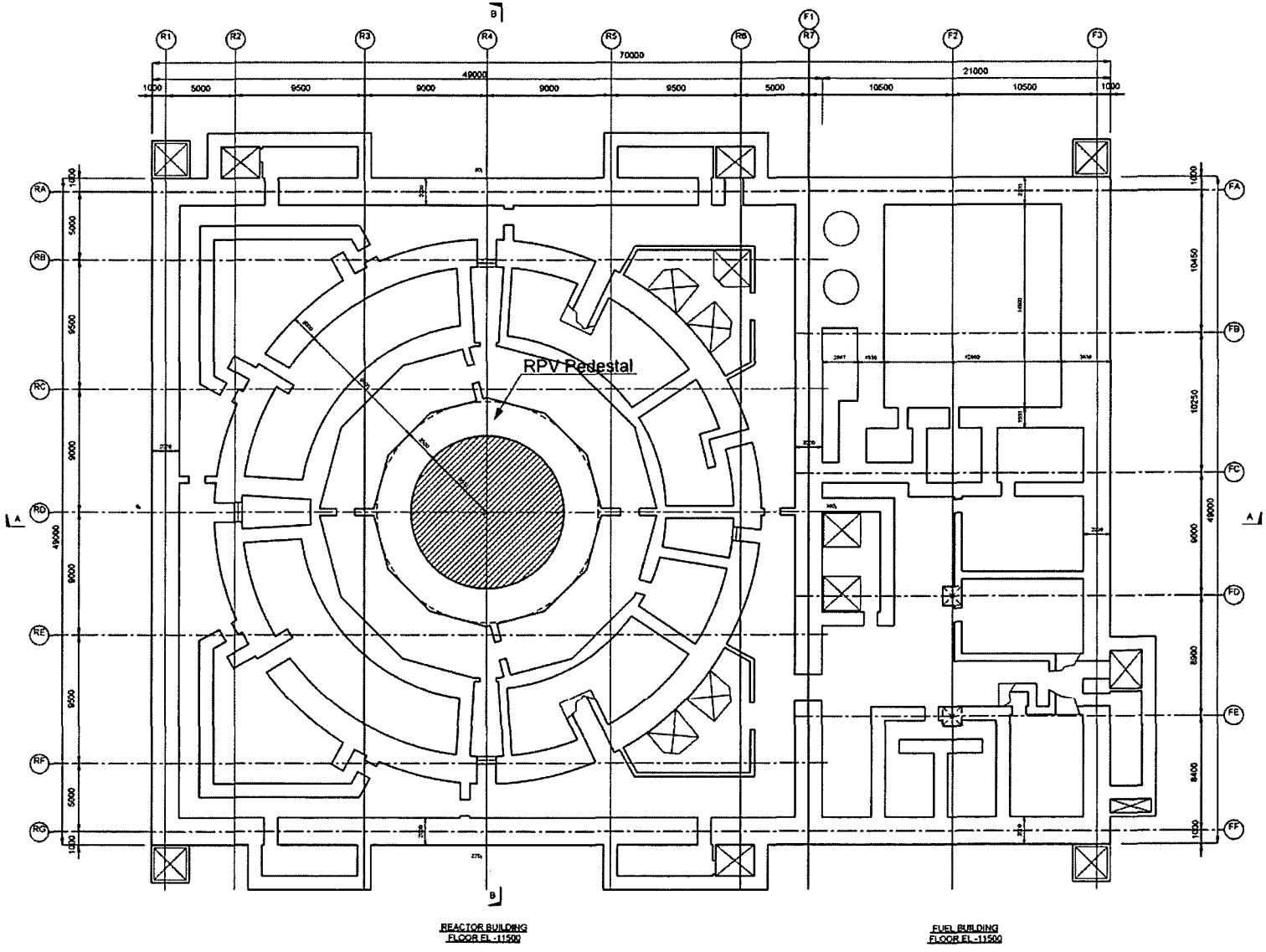

Figure 3.8-100 (3) Plan at EL -1150

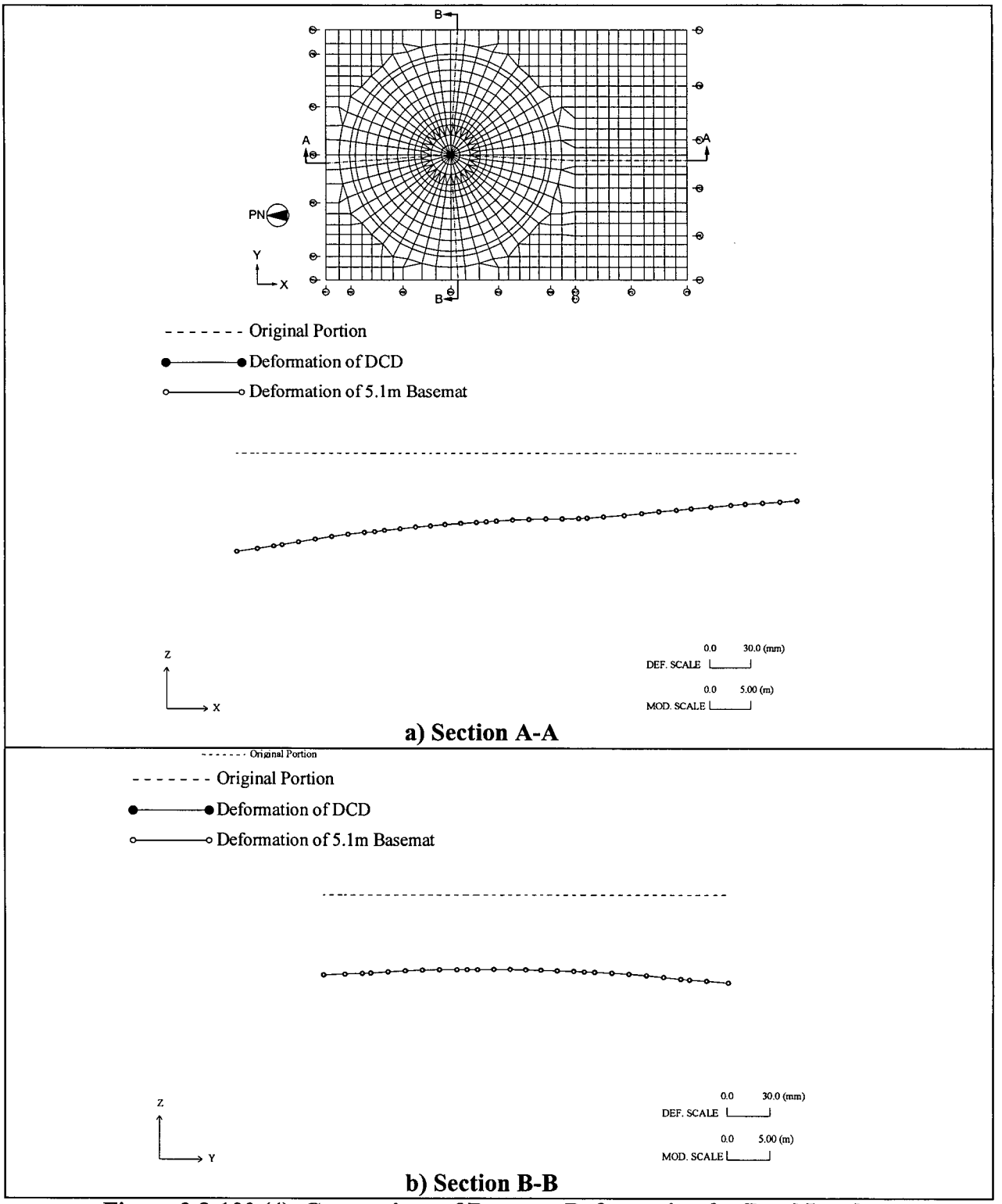

Figure 3.8-100 (4) Comparison of Basemat Deformation for Dead Load

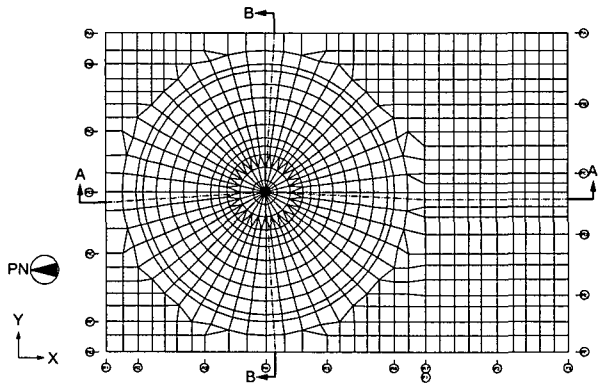

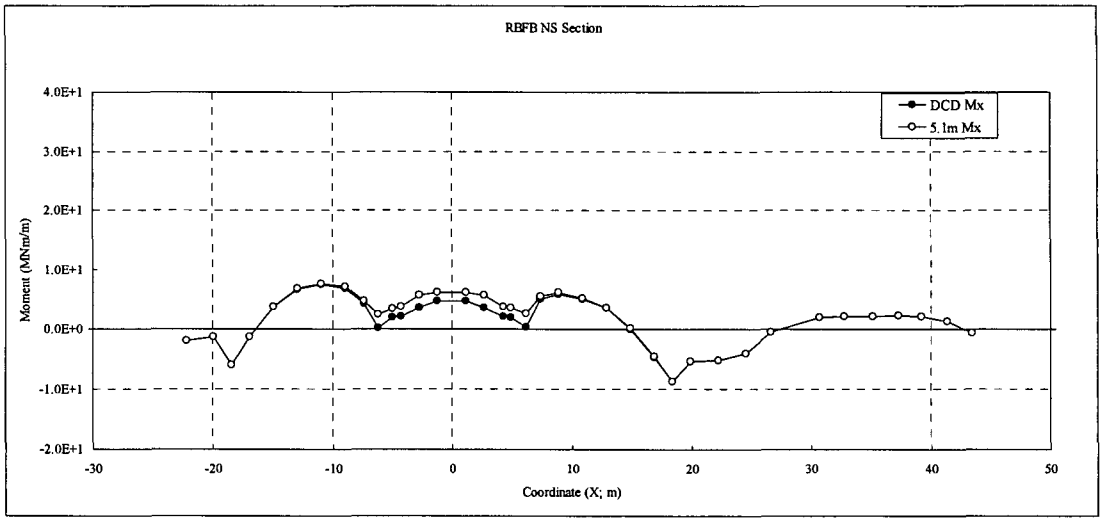

a) Mx in A-A Section for Dead Load

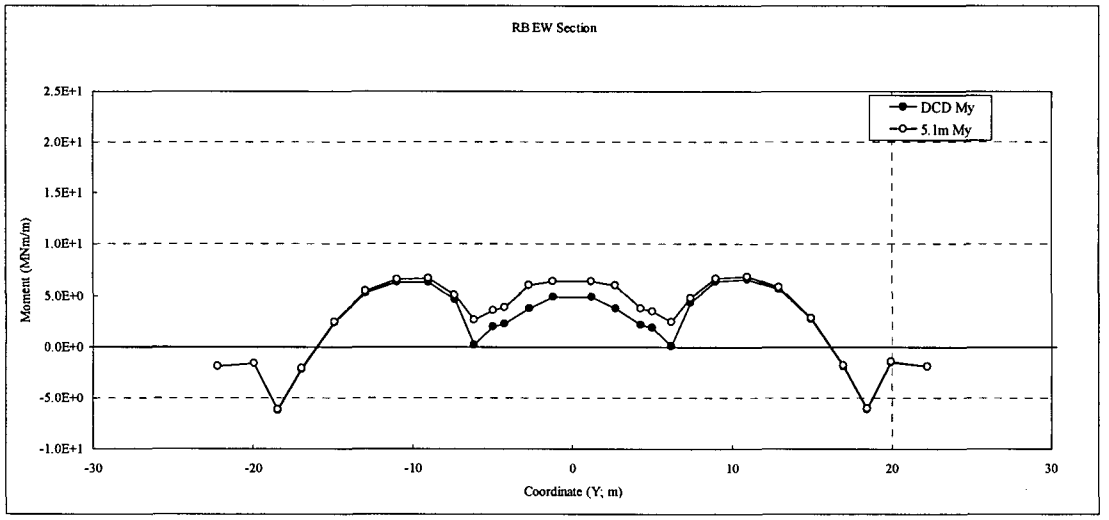

b) My in B-B Section for Dead Load

Figure 3.8-100 (5) Comparison of Basemat Sectional Moments

NRC RAI 3.8-100, Supplement 2

NRC Assessment Following the December 14, 2006 Audit

GE shows that the bending moments increase almost 30 % at the center due to the larger basemat thickness at the center. Since GE's primary reinforcement design is based on a 4 m depth as shown in Figure 3.8-100 (1), the effective height of the section for reinforcement design does not increase, therefore the amount of reinforcing steel required should increase. GE needs to clarify the bases for the reinforcement design in the light of their study. Also, GE needs to explain the technical bases for determining the size of the reinforcing bars in the top surface of the thickened portion to prevent the development of concrete cracking. This response needs to be coordinated with the results of BNL's confirmatory analyses.

During the audit, GE provided a draft supplemental response which adequately addressed both questions.

GE Response

The NASTRAN model was revised to include the effect of the thickened portion of the foundation. The calculated section forces and moments are conservatively used in sizing the mat reinforcement and verifying concrete stresses based on 4m thick section.

The thickened portion is reinforced to meet the minimum requirements in ASME Section III Division 2, CC-3535 (b).

DCD Impact

No DCD change was made in response to this RAI Supplement.

3.5-5 R. P. Kennedy, "A Review of Procedures for the Analysis and Design of Concrete Structures to Resist Missile Impact Effects," Holmes and Narver, Inc., September 1975.

3.5-6 Oak Ridge National Laboratory, W. B. Cottrell and A. W. Savolainen, "U. S. Reactor Containment Technology," ORNL-NSIC-5, Vol. 1, Chapter 6.

3.5-7 R. A. Williamson and R. R. Alvy, "Impact Effect of Fragments Striking Structural Elements," Holmes and Narver, Inc., Revised November 1973.

3.5-8 J. R. McDonald, "Rationale for Wind-borne Missile Criteria for DOE facilities", Sept. 1999 (UCRL-CR-135687 S/C B505188).

3.5-9 Bechtel Power Corporation, "Design of Structures for Missile Impact", Topical Report, BC-TOP-9A, Revision 2, September 1974.

in a rectangular grid. The top layer of reinforcement is arranged in a rectangular grid at the center of the mat and then radiates outward in a polar pattern in order to avoid interference with the RPV pedestal reinforcement.

The containment wall and the RPV pedestal are right circular cylinders. The main reinforcement in the wall consists of inside and outside layers of hoop and vertical reinforcement and radial bars for shear reinforcement.

Reinforcement is placed at major discontinuities in the wall, including the vicinity of the wall intersection with the foundation mat, the top slab and the suppression pool slab, around major piping penetrations, equipment hatches and personnel airlocks. Figure 3.8-2 shows a sketch of reinforcement in the RCCV wall around equipment hatches and personnel airlocks.

The containment top slab and the suppression pool slab are circular plates which have uniform thickness.

The reinforcement of the top slab and the suppression pool slab consist of top and bottom layers of main reinforcement and vertical tie bars for shear reinforcement. The top and bottom layers of main reinforcement are arranged in a rectangular grid in the top slab. The main reinforcement of the suppression pool slab is arranged in the radial and circumferential directions.

Regarding steel members such as structural steel shapes, piping supports or commodity supports attached to the exterior containment, Figure 3.8-4 provides a typical external containment plate support with embedment.

3.8.1.1.2 Containment Liner Plate

The internal surface of the containment is lined with welded steel plate to form a leaktight barrier. The liner plate is fabricated from carbon steel, except that stainless steel plate or clad is used on wetted surfaces of the suppression chamber and Gravity-Driven Cooling System (GDCS) pools.

The liner plate is stiffened by use of structural sections and plates to carry the design loads and to anchor the liner plate to the concrete, as shown in Appendix 3G Subsection 3G.1.5.4. The liner plate is thickened locally and additional anchorage is provided at major structural attachments such as penetration sleeves, structural beam brackets, the Vent wall, RPV support bracket and the SRV quencher support connection to the suppression pool slab, and the diaphragm floor connection to the containment wall. Figure 3.8-5 shows the typical detail for the quencher anchorage. The design forces of liner plates are obtained from the analysis directly, and the anchorage design is performed in accordance with ACI 349-01 Appendix B.

Regarding steel members such as structural steel shapes, piping supports or commodity supports inside containment, Figure 3.8-3 shows a typical support plate with anchors embedded in the concrete containment and integrally welded to the Containment Liner. The dimensions of the plate and the number of anchors depend on the loads for each support. They are designed in accordance with ANSI/AISC N690 and ACI 349 Appendix B.

The erection of the liner is performed using standard construction procedures. The containment wall liner and top slab liner are used as a form for concrete placement. The liner on the bottom of the suppression chamber and lower drywell is placed after the slab concrete is in place.

3.8.2.1.4 Drywell Head

A 10,400 mm diameter opening in the RCCV upper drywell top slab over the RPV is covered with a removable steel torispherical drywell head, which is part of the pressure boundary. This structure is shown in Appendix 3G Figure 3G.1-51. The drywell head is designed for removal during reactor refueling and for replacement prior to reactor operation using the Reactor Building crane. One pair of mating flanges is anchored in the drywell top slab and the other is welded integrally with the drywell head. Provisions are made for testing the flange seals without pressurizing the drywell.

There is water in the reactor well above the drywell head during normal operation. The height of water is 6.7 m. The stainless steel clad thickness for the drywell head is 2.5 mm and is determined in accordance with NB-3122.3 requirements so that it results in negligible change to the stress in the base metal.

There are six (6) support brackets attached to the inner surface of the drywell head circumferentially to support the head on the operating floor during refueling. These support brackets have no stiffening effect and do not resist loads when the head is in the installed configuration.

To provide a leak resistant refueling seal, a structural seal plate with an attached compressible-bellows sealing mechanism between the Reactor Vessel and Upper Drywell opening is utilized. The Refueling Seal is a continuous gusseted radial plate that is anchored to the Drywell opening in the Top floor slab. The radial plate surrounds the RPV with a radial gap opening to allow for thermal radial expansion of the RPV. A circumferential radial bracket from the RPV connects to a circumferential bellows that is also connected to the underside of the Drywell opening plate, thus providing a refueling seal, and allowing for axial thermal expansion of the RPV.

3.8.2.2 Applicable Codes, Standards, and Specifications

3.8.2.2.1 Codes and Standards

In addition to the codes and standards specified in Subsection 3.8.1.2.2, the following codes and standards apply:

(1) American Society of Mechanical Engineers (ASME) Boiler and Pressure Vessel Code, Section III, Division 1, Nuclear Power Plant Components, Subsection NE, Class MC and Code Case N-284.

(2) ANSI/AISC-N690-1994s2 (2004) Specification for the Design, Fabrication and Erection of Steel Safety-Related Structures for Nuclear Facilities

3.8.2.2.2 Code Classification

The steel components of the RCCV are classified as Class MC in accordance with Subarticle NCA-2130, ASME Code Section III.

3.8.2.2.3 Code Compliance

The steel components within the boundaries defined in Subsection 3.8.2.1.2, are designed, fabricated, erected, inspected, examined, and tested in accordance with Subsection NE, Class MC Components and Articles NCA-4000 and NCA-5000 of ASME Code Section III. Structural

The design of the mat foundations for the structures of the plant involves primarily determining shear and moments in the reinforced concrete and determining the interaction of the substructure with the underlying foundation medium. For a mat foundation supported on soil or rock, the main objectives of the design are (1) to maintain the bearing pressures within allowable limits, particularly due to overturning forces, and (2) to ensure that there is adequate frictional and passive resistance to prevent sliding of the structure when subjected to lateral loads.

The foundation mat is analyzed using the linear elastic finite element (FE) computer program NASTRAN as described in Sections 3.8.1.4.1.1 and 3.8.4.4.1. The type of finite elements used to model the foundation mat is the thick shell type of elements that account for out-of-plane shear deformation also. The foundation mat resists out-of-plane forces applied from superstructures and foundation soil. Bending moments in the foundation mat are evaluated for the resultant out-of-plane forces. The foundation soil is modeled with elastic springs and connected to the foundation mat elements in the FE model. By means of using this method, the soil-structure interaction (SSI) is considered in the foundation design, and the requirement of SRP 3.8.5 II 4.a is satisfied.

The design loads considered in analysis of the foundations are the worst resulting forces from the superstructures and loads directly applied to the foundation mat due to static and dynamic load combinations.

The worst case scenario for foundation base mat design is the soft soil since it is subject to largest deformation. From the NASTRAN analysis the results are scanned for the worst loads in the mat sections and are selected for checking the section. This enveloping of most severe loading is done for all loading considered in the analysis. In order to confirm the appropriateness of this condition, basemat deformation and sectional moment are compared between the soft soil case (Vs = 300 m/sec) and the hard rock case (Vs = 1700 m/sec). Basemat deformation for the soft soil condition is much larger than that of the hard rock condition. Bending moments for the soft soil are larger than those for the hard rock with few exceptions. The higher bending moments at few locations for the hard rock site has no impact on the design since they are much less than the maximum moments of the soft soil site on which rebar sizing is based.

In the global FEM model the soil springs are assumed to be two-way spring capable of withstanding compression and tension. To evaluate the effect of potential uplift of the basemat under seismic loads, the soil springs, once in tension, are removed through an iterative process. This iterative process is continued until there are no more springs in tension. The analysis results confirmed the adequacy of the basemat design. Details are provided in Appendix 3G.1.5.5.1.

The selected waterproofing material for the bottom of the basemat is a chemical crystalline powder that is added to the mud mat mixture forming a water proof barrier when cured. No membrane waterproofing is used under the foundations in the ESBWR.

The standard ESBWR design is developed using a range of soil conditions as detailed in Appendix 3A. The minimum requirements for the physical properties of the site-specific subgrade materials are furnished in Table 2.0-1. COL actions are addressed in Table 2.0-2, Subsection 2.5.4. Settlement of the foundations, and differential settlement between foundations for the site-specific foundations medium, is calculated, and safety-related systems (i.e., piping, conduit, etc.) designed for the calculated settlement of the foundations. The effect of the site-

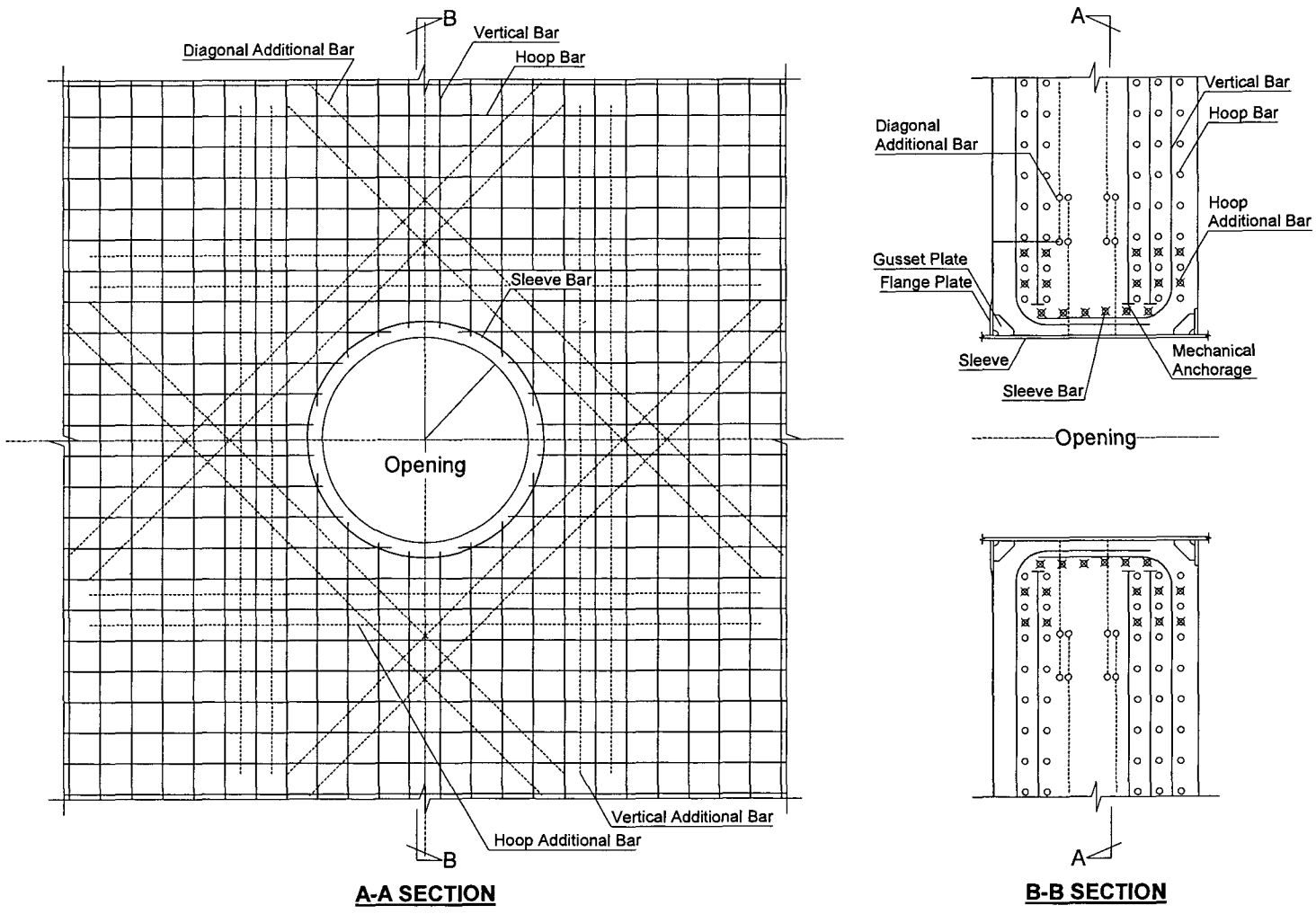

Figure 3.8-2. Schematic of Reinforcements in RCCV Wall Around Equipment Hatch/Personnel Airlock Opening

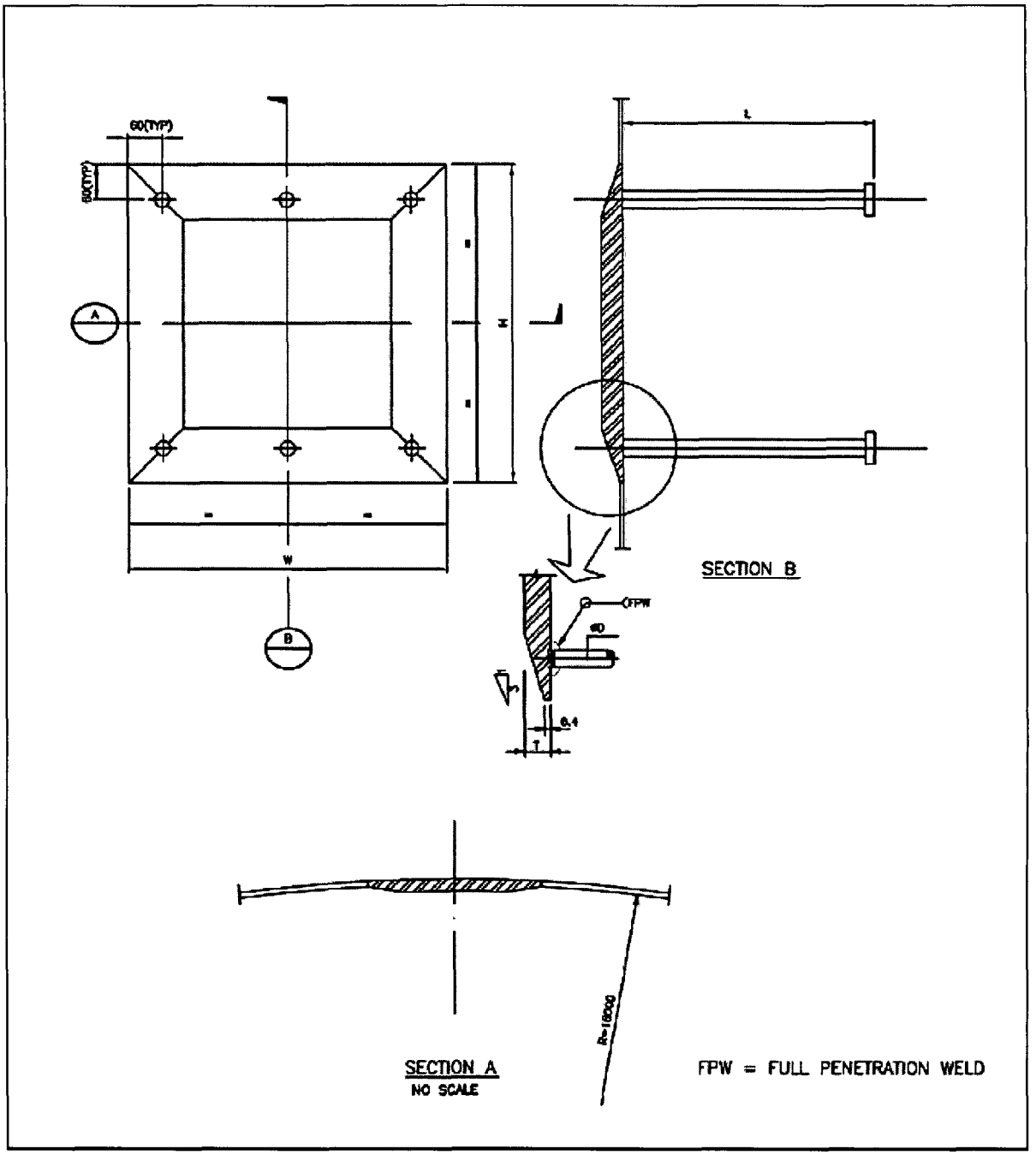

Figure 3.8-3. Typical Internal Containment Plate Support with Embedment Integral with Containment Liner

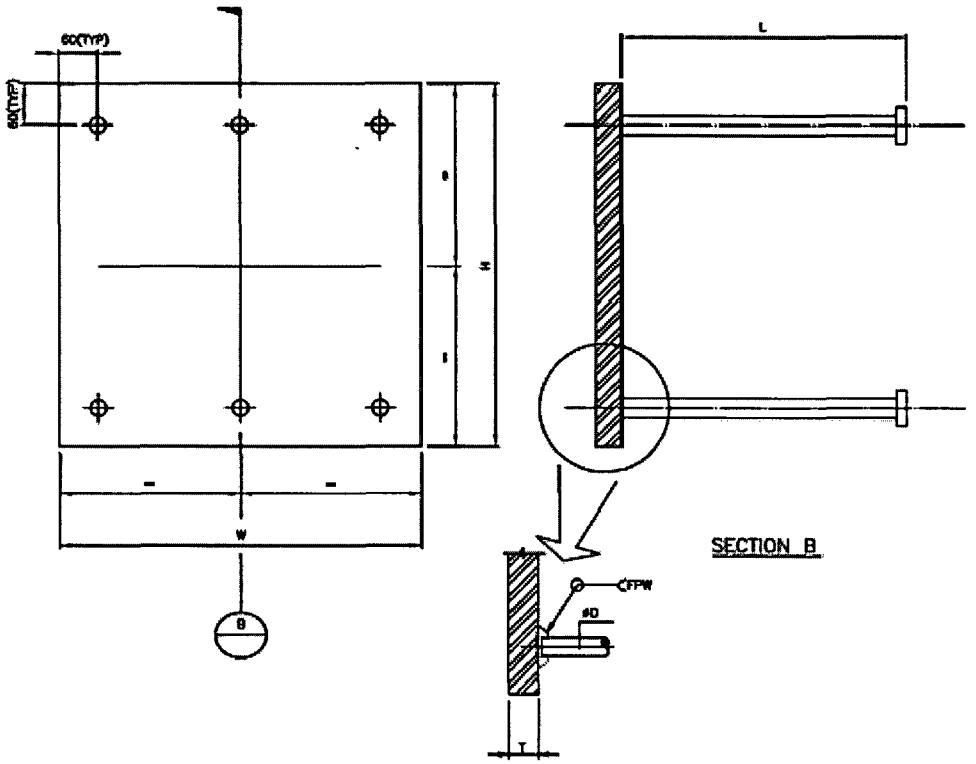

Figure 3.8-4. Typical External Containment Plate Support with Embedment

Hydraulic Control Unit (HCU)

The HCU is analyzed and tested for withstanding the faulted condition loads. Dynamic tests establish the "g" loads in horizontal and vertical directions as the HCU capability for the frequency range that is likely to be experienced in the plant. These tests also ensure that the scram function of the HCU can be performed under these loads. Dynamic analysis of the HCU with the mounting beams is performed to assure that the maximum faulted condition loads remain below the HCU capability.

Reactor Pressure Vessel Assembly

The reactor pressure vessel assembly includes: (1) the reactor pressure vessel boundary out to and including the nozzles and housings for FMCRD and in-core instrumentation; (2) vessel sliding support and (3) the shroud support. The design and analysis of these three parts complies with subsections NB, NF and NG, respectively, of the Code. For faulted conditions, the reactor vessel is evaluated using elastic analysis. For the sliding supports and shroud support, an elastic analysis is performed, and buckling is evaluated for compressive load cases for certain locations in the assembly.

Core Support Structures and Other Safety-Related Reactor Internal Components

The core support structures and other safety-related reactor internal components are evaluated for faulted conditions. The basis for determining the faulted loads for seismic events and other dynamic events is given in Section 3.7 and Subsection 3.9.5, respectively. The allowable Service Level D limits for evaluation of these structures are provided in Subsection 3.9.5.

RPV Stabilizer and FMCRD and In-Core Housing Restraints (Supports)

The calculated maximum stresses meet the allowable stress limits based on the Code, Subsection NF, for the RPV stabilizer and supports for the FMCRD housing and in-core housing for faulted conditions. These supports restrain the components during earthquake, pipe rupture or other reactor building vibration events.

There are eight Reactor Pressure Vessel (RPV) Stabilizers that are equally spaced around the circumference of the RPV and attached to the Reactor Shield Wall (RSW). The Stabilizer allows for free thermal radial and vertical growth of the RPV through an oversized hole in an integral lug attached to the RPV. The lug while free to move radially and vertically is restrained tangentially by end plates welded to a bracket attached to the RSW. There are springs on either side of the lug connected by rods through the oversized hole that engage the yoke end. Under design loading, the RPV lugs will move laterally and transfer loads to the bearing plates of the Stabilizers. Since the Stabilizers are located at eight locations, several of the Stabilizers will engage during this lateral motion. An adequate minimum gap between the RPV lug and RPV stabilizer bearing elements is provided during the construction phase for proper alignment.

Main Steam Isolation Valve, Safety/Relief Valve and Other ASME Class 1 Valves

Elastic analysis methods and standard design rules, as defined in the Code, are utilized in the analysis of the pressure boundary, Seismic Category I, ASME Class 1 valves. The Code-allowable stresses are applied to assure integrity under applicable loading conditions including faulted condition. Subsection 3.9.3 discusses the operability qualification of the major active valves including main steam isolation valve and the main steam safety/relief valve for seismic and other dynamic conditions.

NASTRAN model due to these loads are used for the structural integrity evaluation of the structures other than GDCS pool, while the results from GDCS pool local model are used for evaluation of GDCS pool itself.

(10) Hydrodynamic load

(11) Static analysis is performed for the hydrodynamic load (CO, CH and SRV) on vent wall taking DLF = 2 into account.

(12) Pipe Break loads consist of Annulus Pressurization (AP) load, jet impingement and pipe-whip restraint loads

(13) These loads acting on the RSW are first analyzed for dynamic response using the NASTRAN beam model. The resulting maximum values of bending moment and shear force are then applied to the integral NASTRAN static analysis model.

The Absolute Sum (ABS) method is used to combine the stresses due to dynamic loads, such as seismic, hydrodynamic and AP loads, for all steel structures except for the GDCS Pool for which the SRSS method is applied.

3G.1.5.4.2.1 Diaphragm Floor

Design of Structural Components

The design of the diaphragm floor is based on the elastic analysis results obtained from model described in Section 3G.1.4. Figure 3G.1-55 shows design details. Table 3G.1-37 summarizes the highest stresses in various structural elements of the D/F slab. All stresses are within allowable stress limits.

Design of Anchorage

Figure 3G.1-56 shows diaphragm floor anchorage into the RCCV wall. Rebars have been used for anchoring the steel plates. Threaded couplers have been used so that the anchor bars can be connected after installation of the reinforcing steel of the RCCV wall. The anchorage is designed so as to avoid interference with the RCCV reinforcing steel. Anchorage requirements for various loading combinations and the capacity of anchorage provided is shown in Table 3G.1-38.

3G.1.5.4.2.2 Vent Wall Structure

Design of Structural Components

Figure 3G.1-57 shows the design details. Highest stresses in inner cylinder, outer cylinder and the web plates are summarized in Table 3G.1-39. The stresses are shown to be within allowable stress limits.

Design of Anchorage

Figure 3G.1-57 shows vent wall anchorage into the RCCV wall. Rebars have been used for anchoring the steel plates. Threaded couplers have been used so that the anchor bars can be connected after installation of the reinforcing steel of the RCCV wall. The anchorage is designed so as to avoid interference with the RCCV reinforcing steel. Anchorage requirements for various loading combinations and the capacity of anchorage provided is shown in Table 3G.1-42.

3G.1.5.5 Foundation Stability

The Reactor Building, the concrete containment and the Fuel Building share a common foundation. The stabilities of the foundation against overturning, sliding and floatation are evaluated. The energy approach is used in calculating the factor of safety against overturning.

The factors of safety against overturning, sliding and floatation are given in Table 3G.1-57. All of these meet the acceptance criteria.

Maximum soil bearing stress is found to be 699 kPa due to dead plus live loads. Maximum bearing stresses for load combinations involving SSE are shown in Table 3G.1-58 for various site conditions.

3G.1.5.5.1 Effect of Basemat Uplift

As described in Appendix 3G.1.4.2, the foundation soil is represented by elastic soil springs which resist both compression and tension. However, actual foundation soil cannot bear tensile force. This difference may have an influence on the stresses in the basemat, if the basemat is uplifted due to design loads. Therefore, analyses to evaluate the effect of potential uplift of the basemat are performed using the RB/FB global FE model shown in Figure 3G.1-8.

An iterative approach is used. Based on the result from the initial analysis, the tension capability is removed in the next iteration for those springs that are in tension. This iterative process is continued until there are no more springs in tension.

Analyses are performed for the horizontal SSE loads. Figures 3G.1-60 through 3G.1-64 show the comparison of the sectional deformations of the basemat and the bending moments generated in the basemat respectively at the final step of iteration. In the area close to the RCCV wall, bending moments are higher than that of the linear analysis results; however the resulting stresses in the concrete and reinforcement for the design "SSE + LOCA" load combination are still below the code allowables with large margins as shown in Table 3G.1-59. Therefore, it can be concluded that the effect of uplift is negligible to the linear analysis using the global FE model.

3G.1.5.6 Tornado Missile Evaluation

The minimum thickness required to prevent penetration and concrete spalling is evaluated. The methods and procedures are shown in Section 3.5.3.1.1. The minimum thickness required is less than the minimum 1000 and 700 mm thickness provided for the RB external walls and roof, respectively.

3G.1.6 References

3G.1-1 Burns & Roe, "State-of-the-Art Report on High Temperature Concrete Design," prepared for US. Department of Energy, Document No. DOE/CH/94000-1, November 1985.

Table 3G.1-59

Stress Calculation Results for Basemat Uplift Analysis

Seismic Force Direction	Soil Condition	Element ID	Load	Concrete Stress (MPa)		Primary Reinforcement Stress (MPa)				
				Calculated	Allowable	Radial		Circumferential		Allowable
						Top	Bottom	Top	Bottom	
S to N	Soft	80275	SSE+LOCA 6min	-7.8	-23.5	-45.2	8.6	-7.2	17.2	372.2
			SSE+LOCA 72h	-8.8	-23.5	-49.8	15.4	-8.2	28.1	372.2
		90402	SSE+LOCA 6min	-5.0	-23.5	-27.0	17.7	54.5	42.9	372.2
			SSE+LOCA 72h	-4.0	-23.5	-18.9	10.1	58.3	40.2	372.2
		90408	SSE+LOCA 6min	-3.0	-23.5	19.0	-10.3	51.6	-3.2	372.2
			SSE+LOCA 72h	-3.0	-23.5	17.5	-10.5	51.7	-3.0	372.2

Seismic Force Direction	Soil Condition	Element ID	Load	Concrete Stress (MPa)		Primary Reinforcement Stress (MPa)				
				Calculated	Allowable	Radial		Circumferential		Allowable
						Top	Bottom	Top	Bottom	
W to E	Soft	80262	SSE+LOCA 6min	-17.9	-23.5	-58.7	175.6	-20.4	191.1	372.2
			SSE+LOCA 72h	-18.4	-23.5	-60.8	183.5	-20.2	193.4	372.2
		80462	SSE+LOCA 6min	-12.0	-23.5	227.7	-9.8	11.5	-48.2	372.2
			SSE+LOCA 72h	-11.5	-23.5	225.6	-8.4	-11.5	-47.2	372.2
E to W	Soft	80287	SSE+LOCA 6min	-14.6	-23.5	-49.1	140.8	-14.6	149.7	372.2
			SSE+LOCA 72h	-15.3	-23.5	-52.1	147.2	-15.4	150.4	372.2
		80462	SSE+LOCA 6min	-8.5	-23.5	-43.9	166.6	71.4	113.5	372.2
			SSE+LOCA 72h	-9.0	-23.5	-43.9	175.4	64.9	123.6	372.2

Note: Because the seismic force in N to S direction does not cause the basemat uplift, its calculation result is not included in this table. Refer to Figure 3G.1-60.

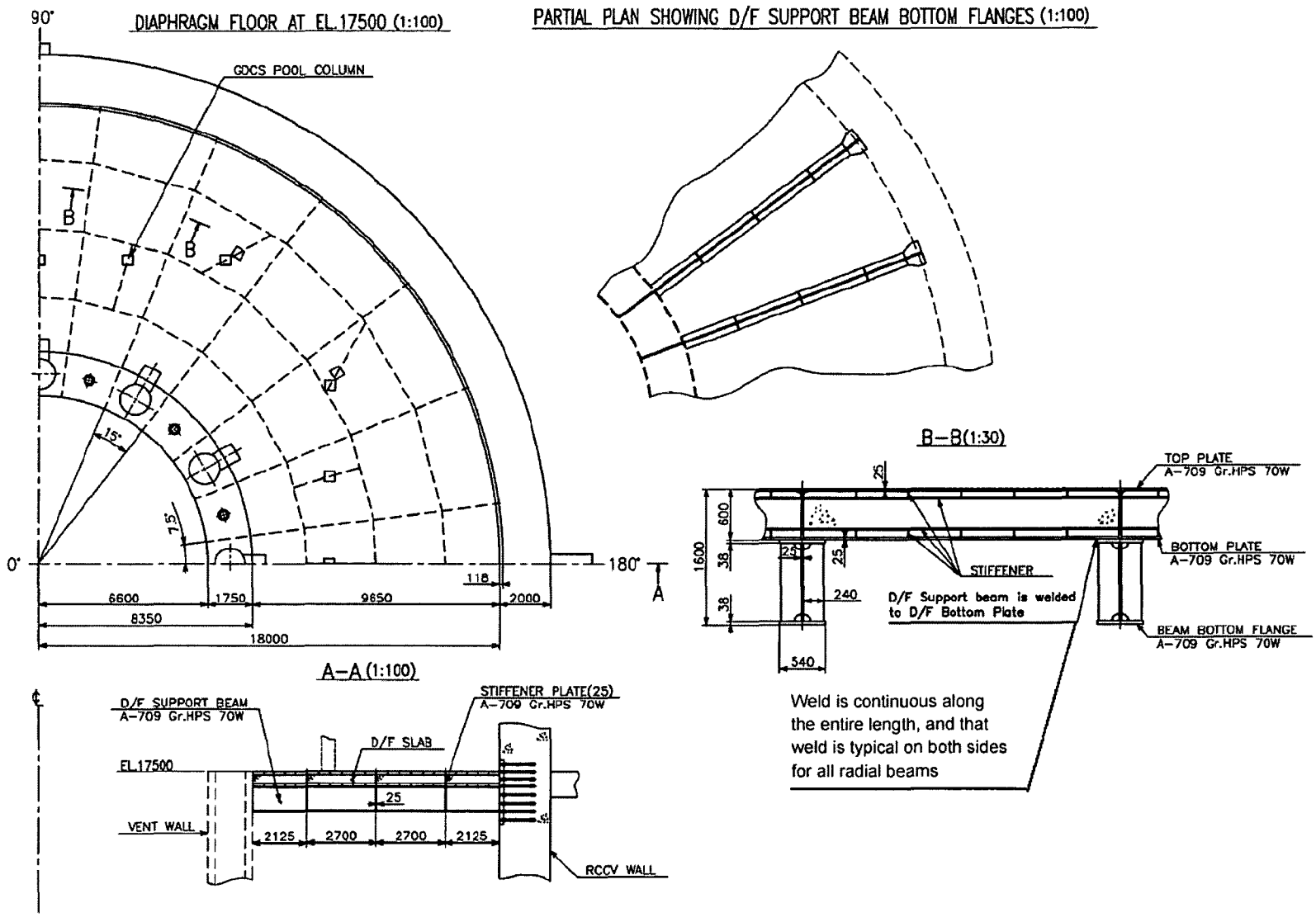

Figure 3G.1-55. Diaphragm Floor

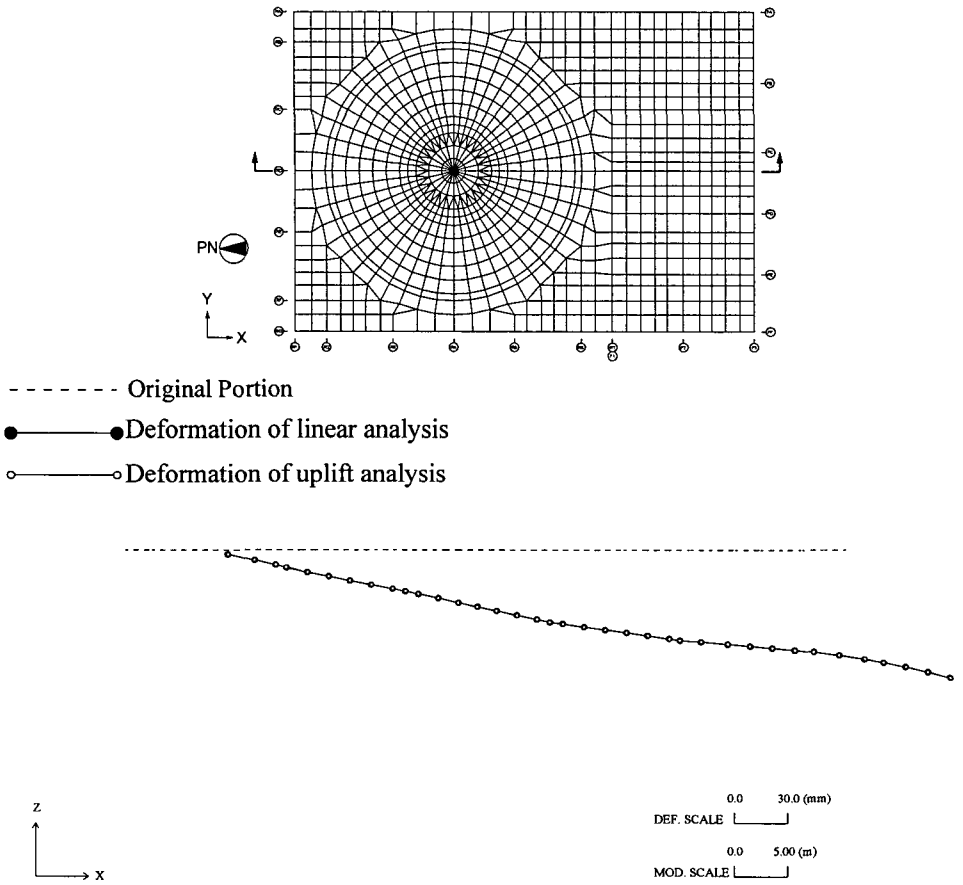

a) North to South

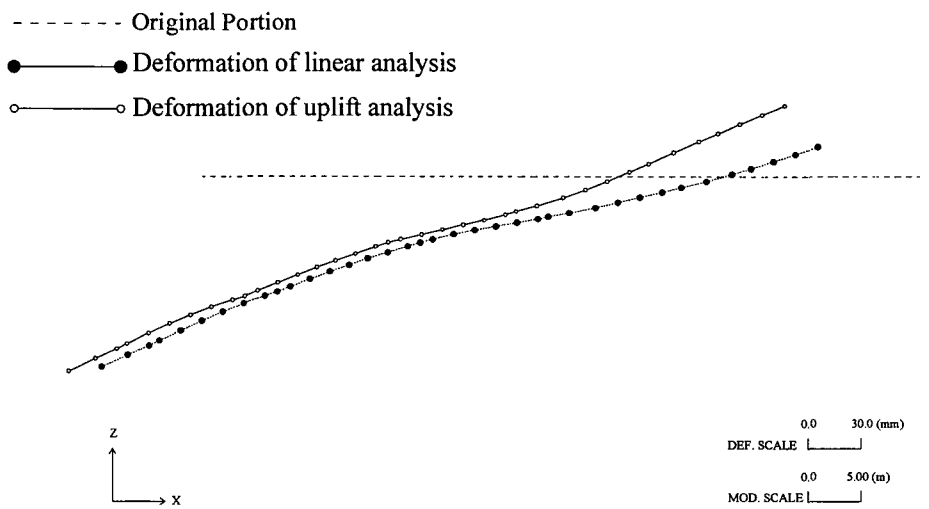

b) South to North

Figure 3G.1-60. Comparison of Basemat Deformation without Tension Springs (NS Direction SSE)

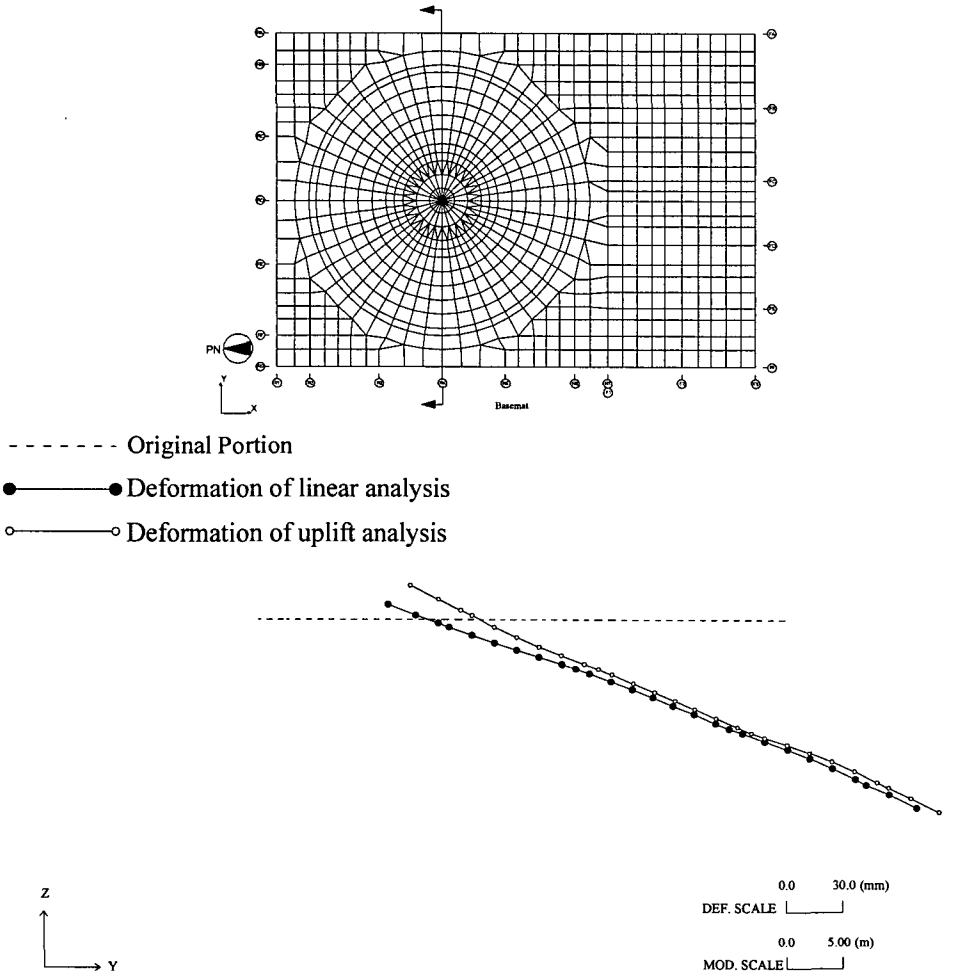

a) West to East

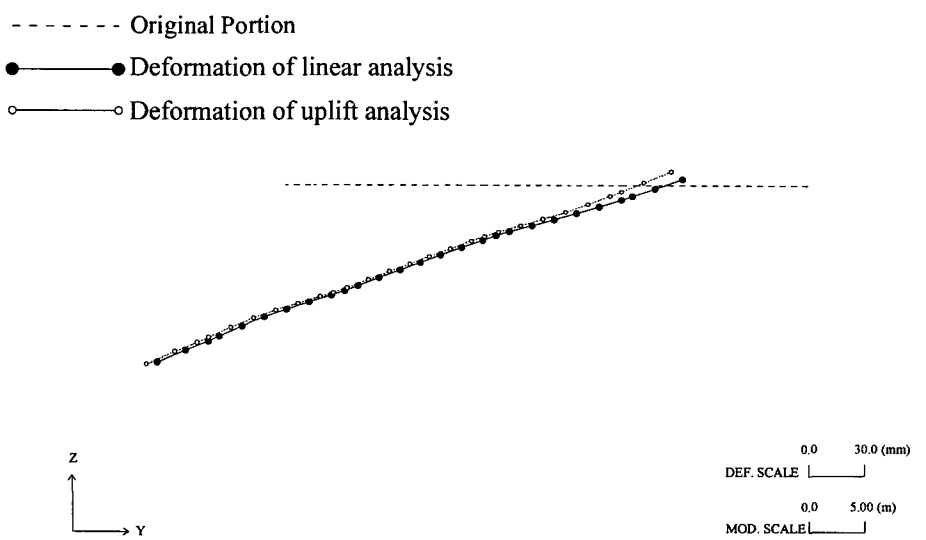

b) East to West

Figure 3G.1-61. Comparison of Basemat Deformation without Tension Springs (EW Direction SSE)

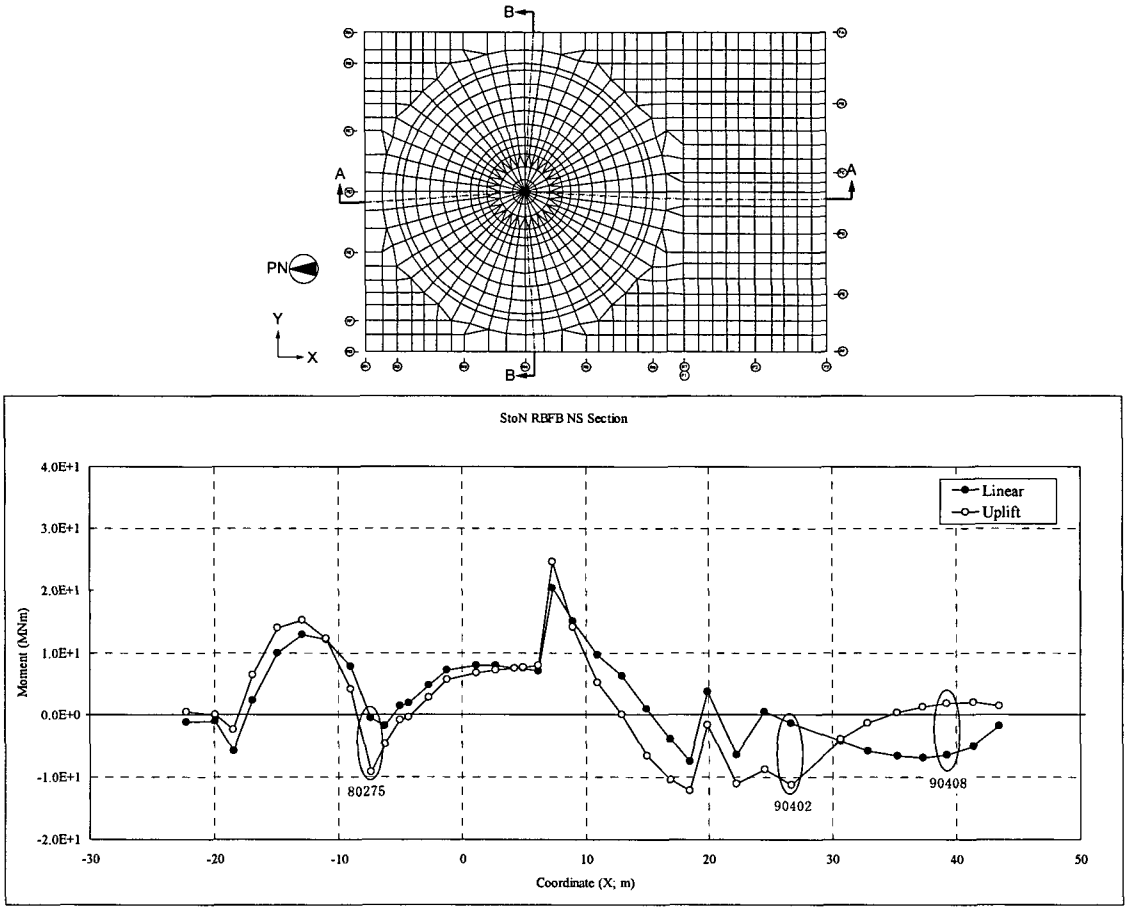

a) Mx in A-A Section

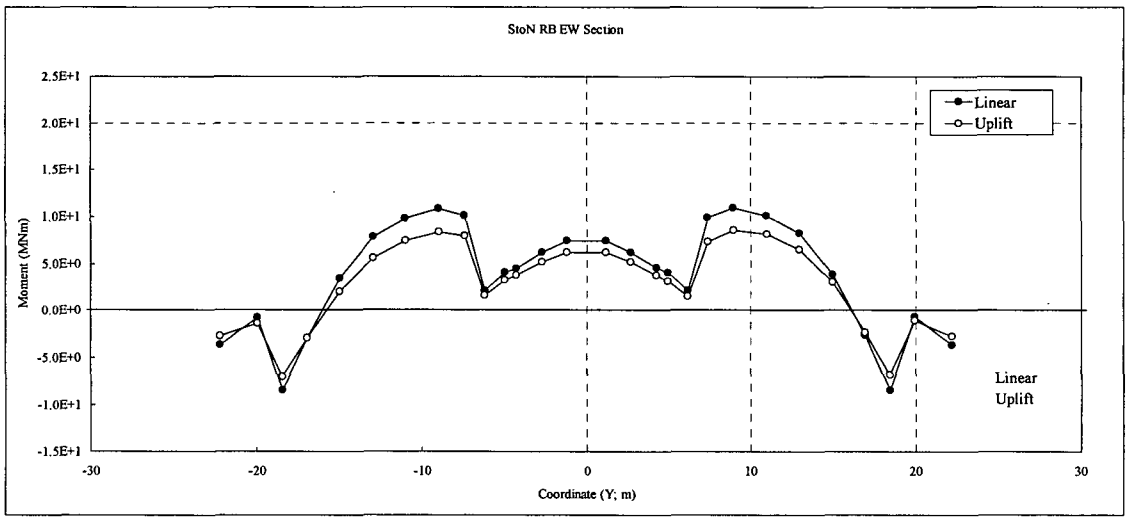

b) My in B-B Section

Figure 3G.1-62. Comparison of Basemat Sectional Moments (S to N SSE)

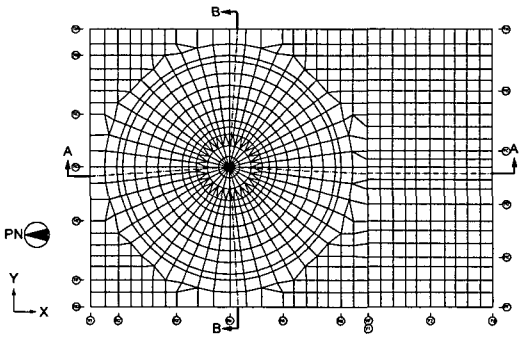

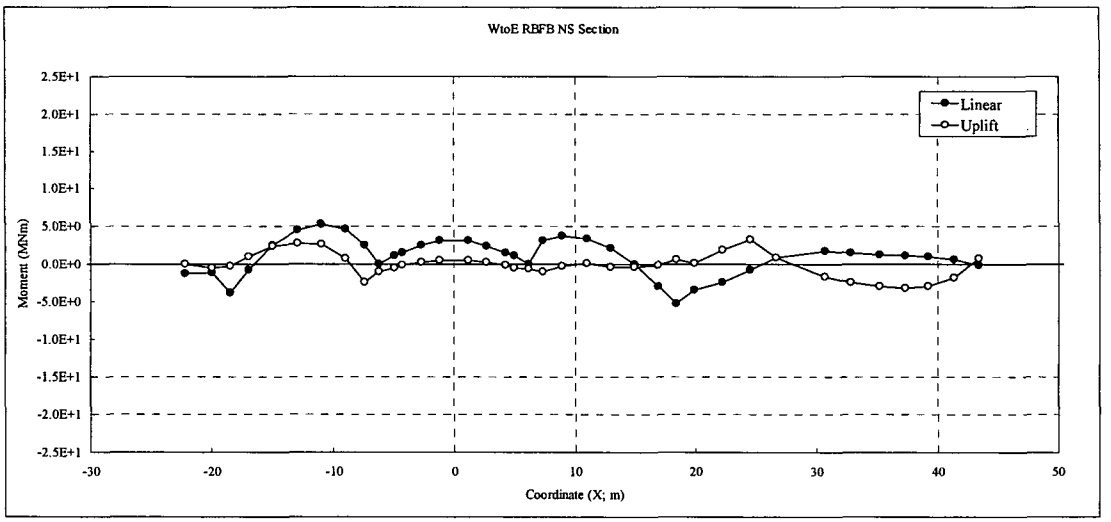

a) Mx in A-A Section

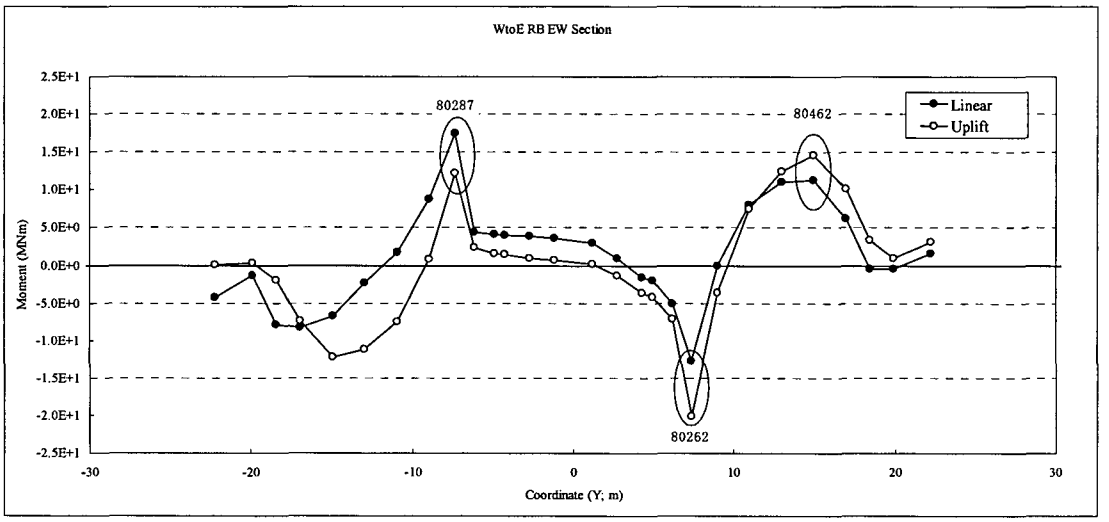

b) My in B-B Section

Figure 3G.1-63. Comparison of Basemat Sectional Moments (W to E SSE)

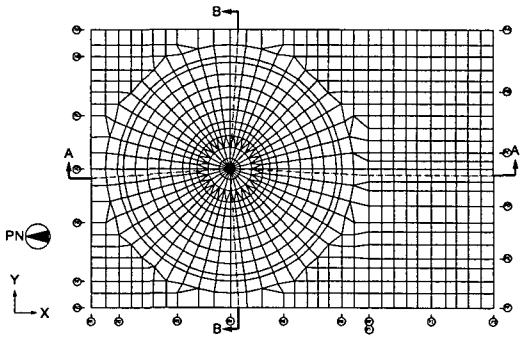

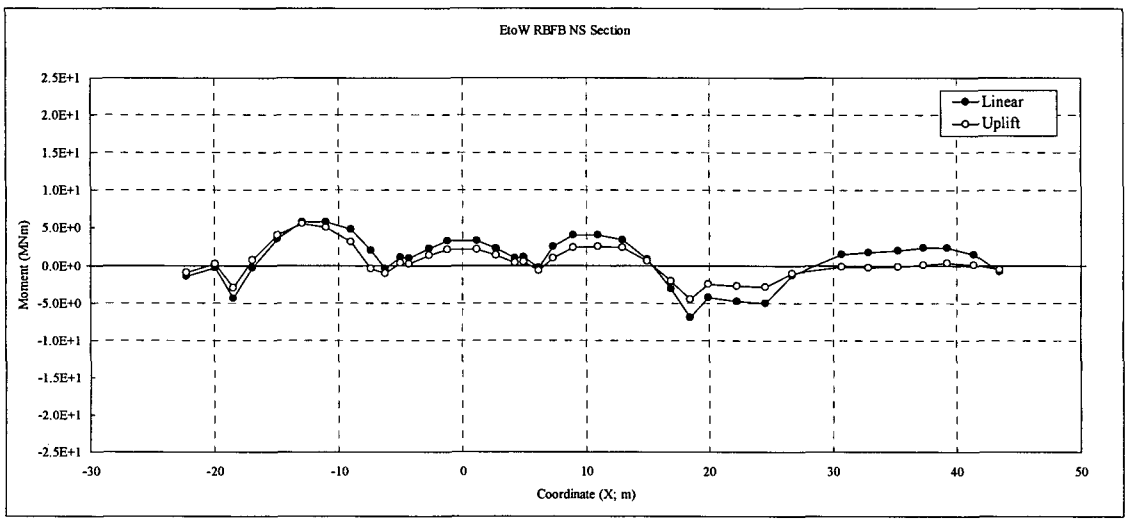

a) Mx in A-A Section

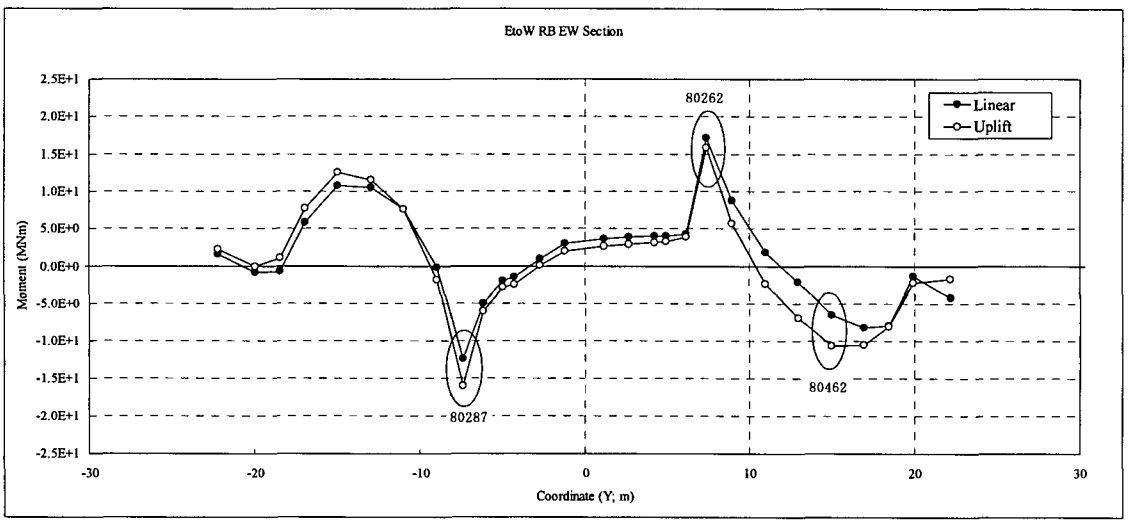

b) My in B-B Section

Figure 3G.1-64. Comparison of Basemat Sectional Moments (E to W SSE)