SOUTHERN NUCLEAR OPERATING COMPANY
MATERIAL AND INSPECTION SERVICES

VOLUME 3

CLASS 1, 2, AND 3 FIGURES

FOURTH TEN-YEAR INSERVICE INSPECTION PLAN

E. I. HATCH NUCLEAR PLANT

UNIT 2

REV	DATE	DESCRIPTION	PREP'D BY (M&IS)	REV'D BY (M&IS)	APPV. BY (M&IS)	SITE REV'D BY	APPV. PLANT SUPP. MGR.
1.0	11/20/06	INITIAL ISSUE	MB	JMA	DDS	Site Stamp	Site Stamp

SOUTHERN NUCLEAR OPERATING COMPANY
MATERIAL AND INSPECTION SERVICES

VOLUME 3

CLASS 1, 2, AND 3 FIGURES

FOURTH TEN-YEAR INSERVICE INSPECTION PLAN

E. I. HATCH NUCLEAR PLANT

UNIT 2

REVISION 1.0

HNP ISI APPROVAL	
Written By:	SNC-M&IS Department
Reviewed By:	George Fechter 12/15/06
Engr. Supv:	Dale Wellyard 12/15/06
Mgr. Engr:	Bernie L. Goodwin 12/21/06

Hatch Unit 2 Fourth Ten-Year Examination Plan
List of Effective Pages

Volume 3

This document consists of four sections of ISI Figures. These are:

- Equipment Support Figures
- Class 1 Figures
- Class 2 Figures
- Class 3 Figures

Each figure consists of only one page. Each section has a drawing list with the current revision listed, except for the Equipment Support Figures which do not have a revision number. As drawings are revised the appropriate drawing list will be revised to reflect the new revision.

Hatch Unit 2 Fourth Ten Year Inservice Inspection Plan
Equipment Support Figures

Figure No.	Description
2B11-SK1	Reactor Vessel 2B11
2C41-SK2	Standby Liquid Control Storage Tank 2C41-A001
2C41-SK3	Standby Liquid Control Pump 2C41-C001A/B
2E11-SK4	RHR Heat Exchanger 2E11-B001A/B
2E11-SK5	RHR Pump 2E11-C002A/B/C/D
2E21-SK6	Core Spray Pumps 2E21-C001A/B
2E41-SK7	HPCI Pump 2E41-C001
2E51-SK8	RCIC Pump 2E51-C001
2T47-SK9	Primary Containment Cooling Units 2T47-B007A/B, B008A/B, B009A/B, B010A/B
2E11-SK10	RHR Service Water Pump C001A/B/C/D
2E11-SK11	RHR Service Water Strainer 2E11-D002A/B, 2E11-D003A/B
2P41-SK12	Plant Service Water Pumps 2P41-C001A/B/C/D
2P41-SK13	Standby Diesel Service Water Pump 2P41-C002
2P41-SK14	Plant Service Water Strainer 2P41-D001A/B
2P64-SK15	Drywell Chiller Condenser 2P64-B006A/B
2T41-SK16	RHR & Core Spray Pump Room Cooler B002A/B
2T41-SK17	RHR & Core Spray Pump Room Cooler B003A/B
2T41-SK18	HPCI Pump Room Cooler B005A/B
2Z41-SK19	LPCI Inverter Room Cooler 2Z41-B020A/B

REF. DWG.: REACTOR VESSEL
MANUAL SX 27685

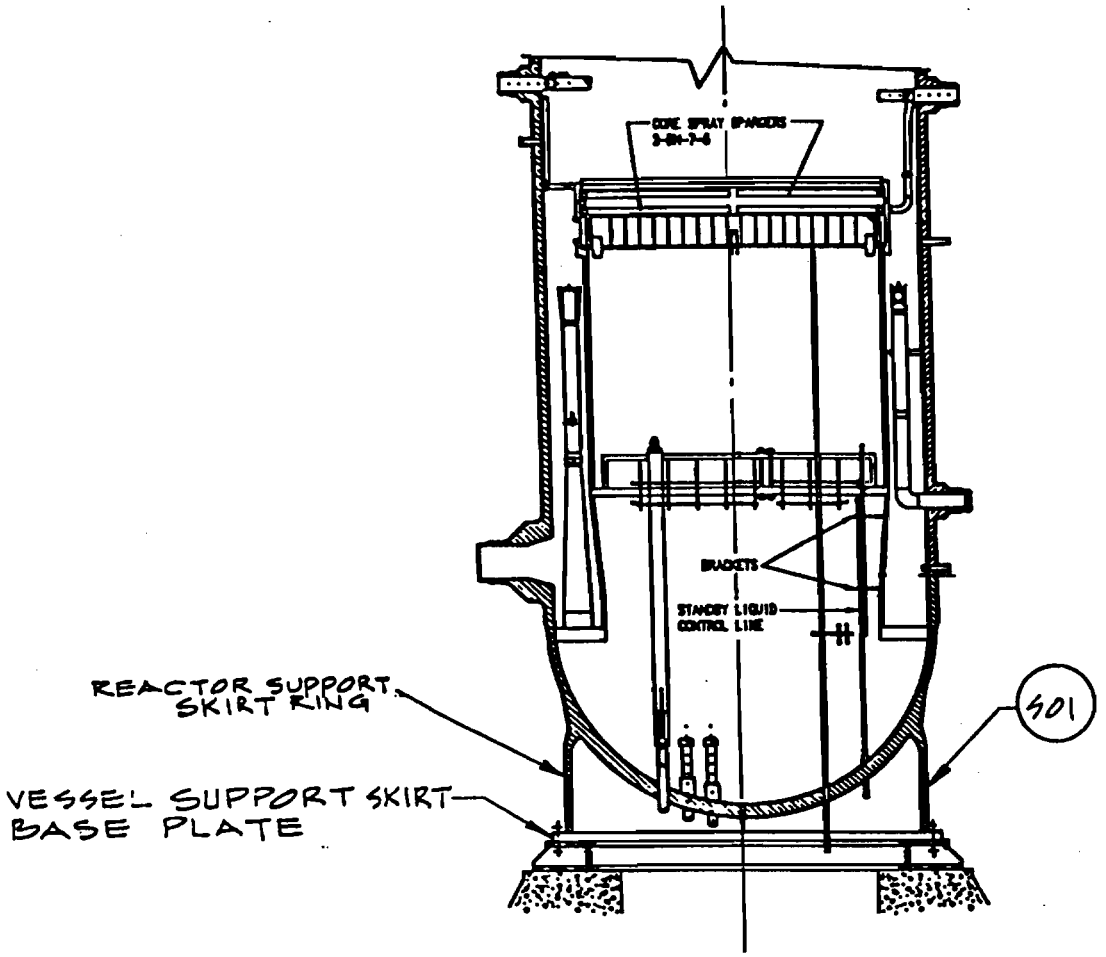

REACTOR VESSEL - 2B11

2B11-SK1

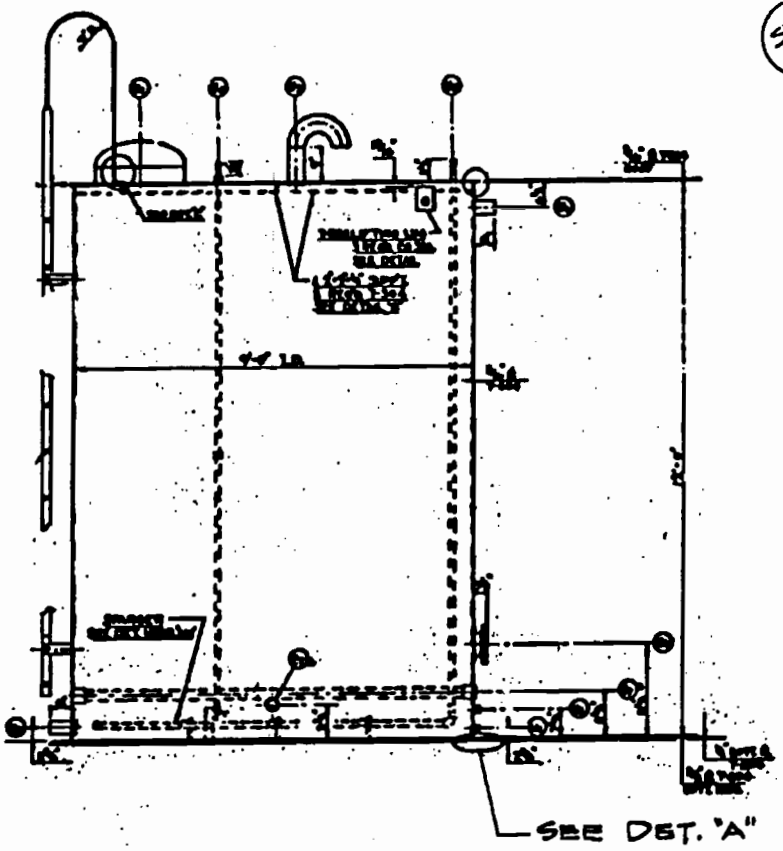

STANDBY LIQUID CONTROL STOR. TK
2C41-A001

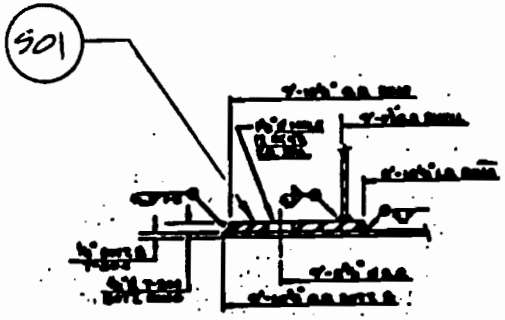

DETAIL "A"

REF. DWG: STANDBY LIQ. CONTROL STOR. TK. S-25399

2C41-SK2

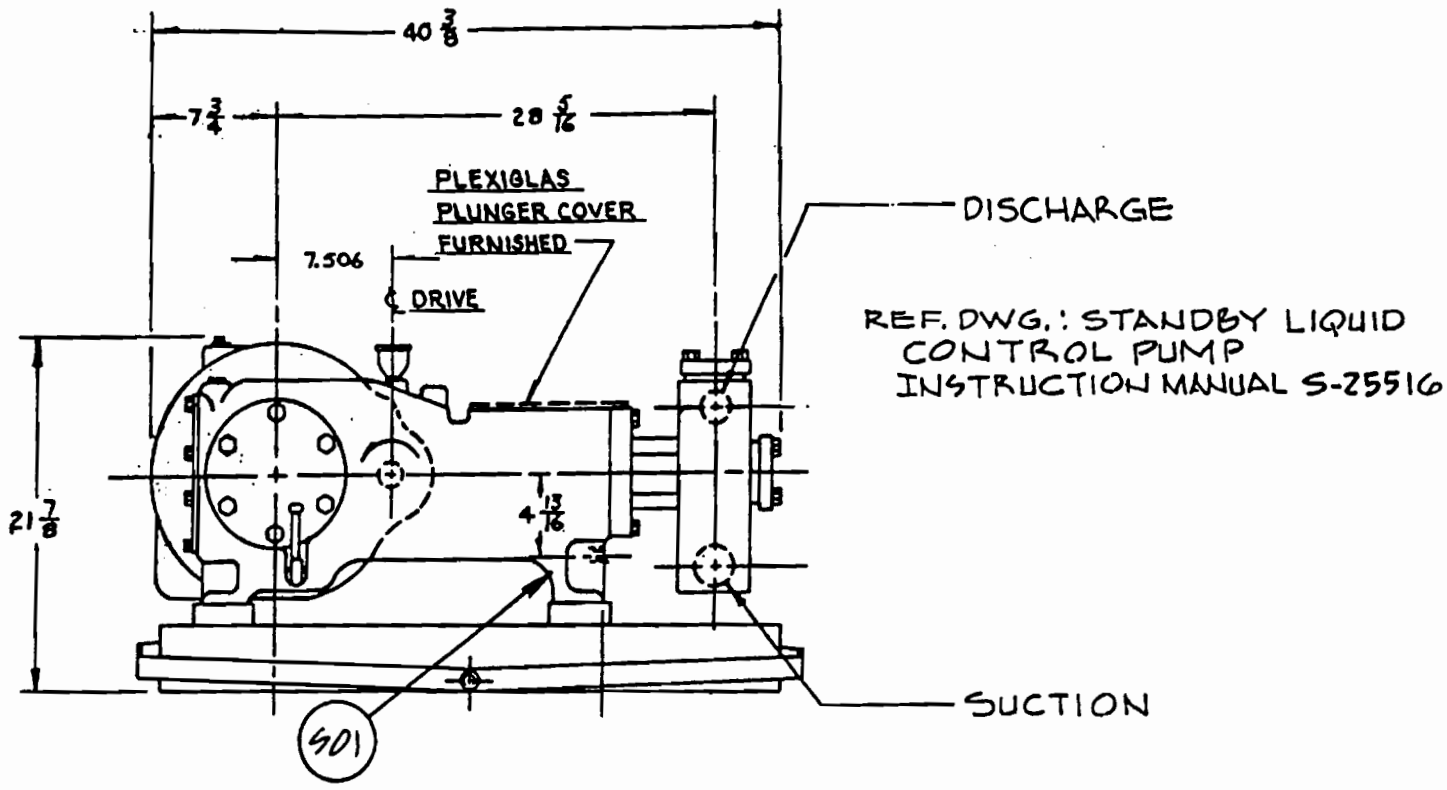

STANDBY LIQUID CONTROL PUMP
2C41-C001 A/B

2C41-SK 3

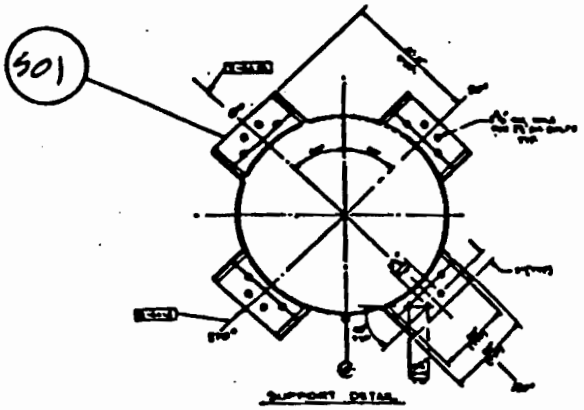

SECTION "A-A"

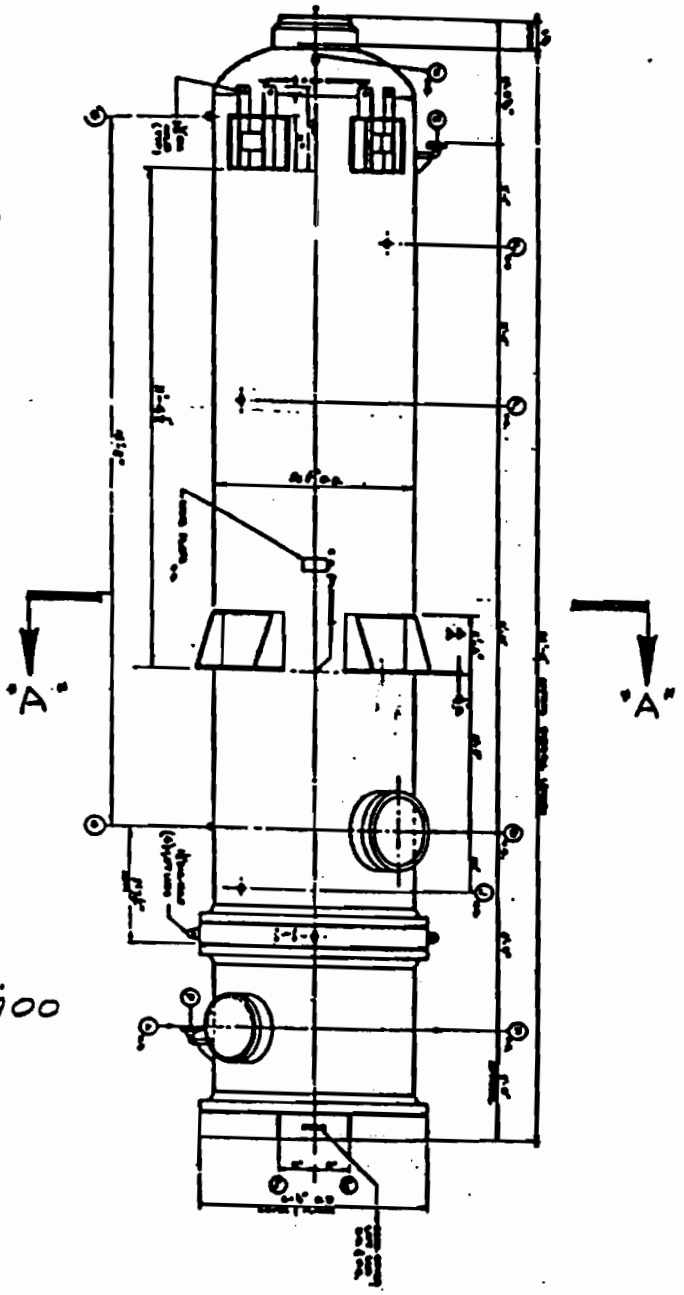

REF. DWG.: RHR HEAT EXCH.
INSTRUCTION MANUAL.
S-25700

RHR HEAT EXCHANGER 2E11-B001A/B

2E11-SK4

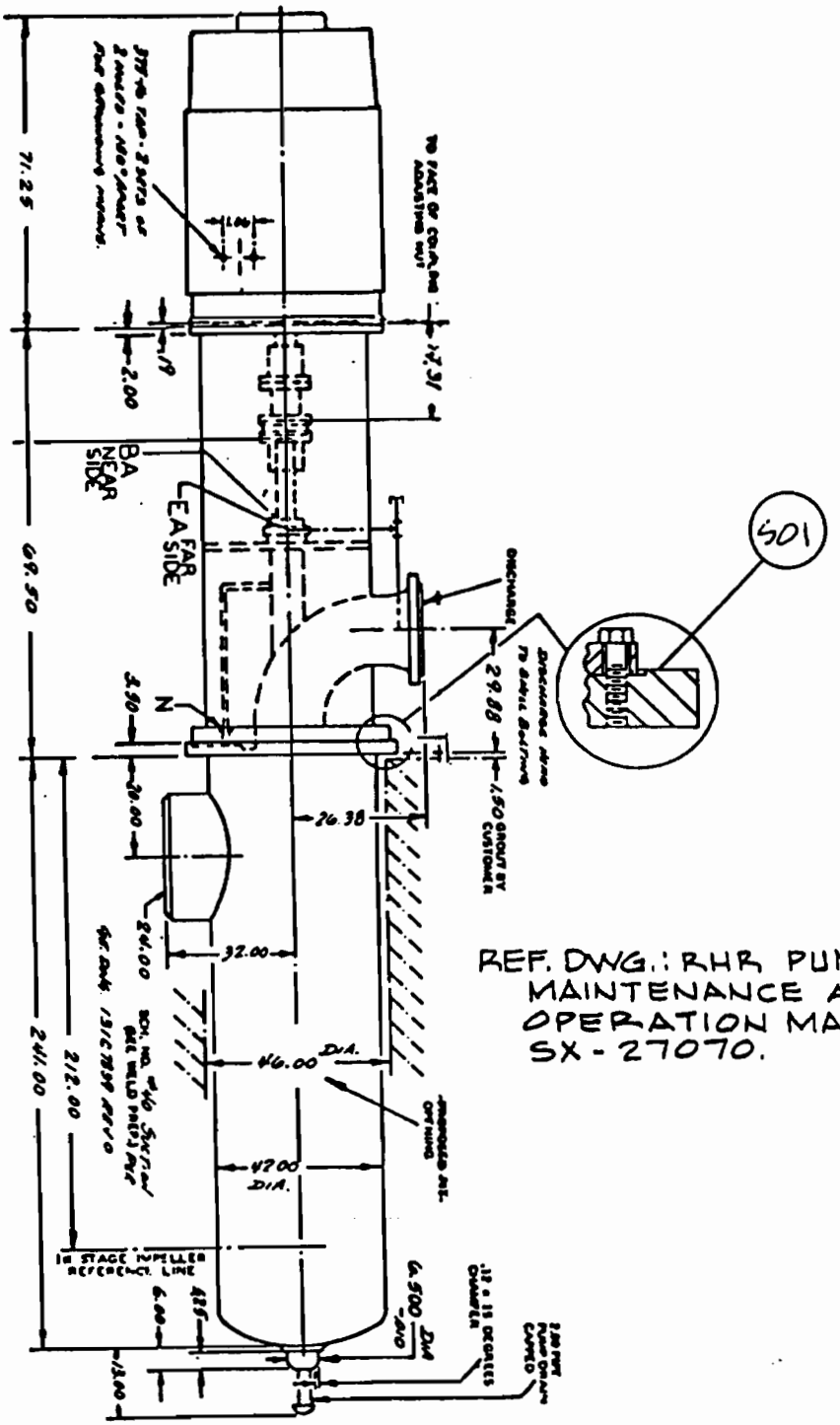

RHR PUMP 2E11-C002A/B/C/D

2E11-SK5

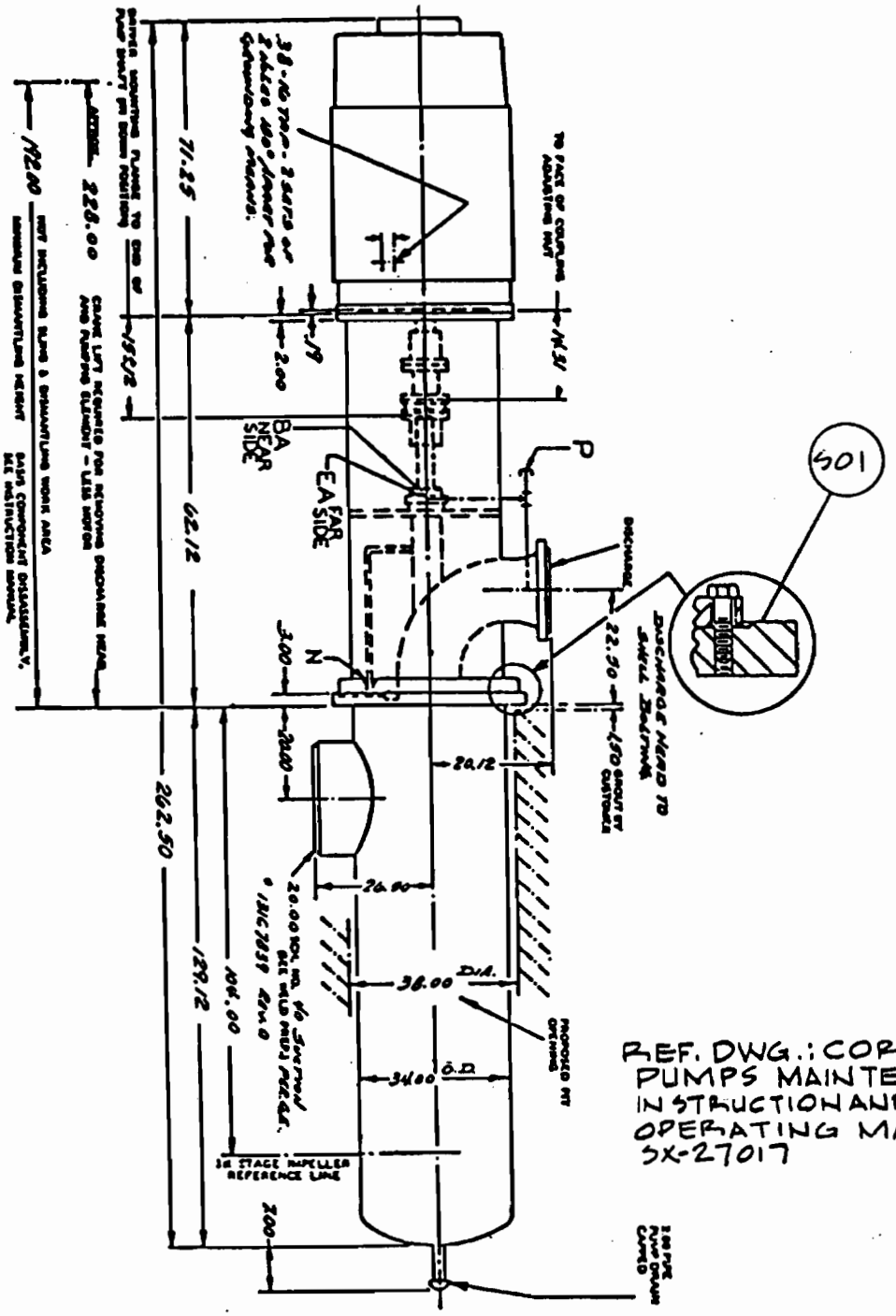

REF. DWG.: CORE SPR
PUMPS MAINTENANCE
INSTRUCTION AND
OPERATING MANUAL
SX-27017

CORE SPRAY PUMPS - 2E21-C001A/B

2E21-SK6

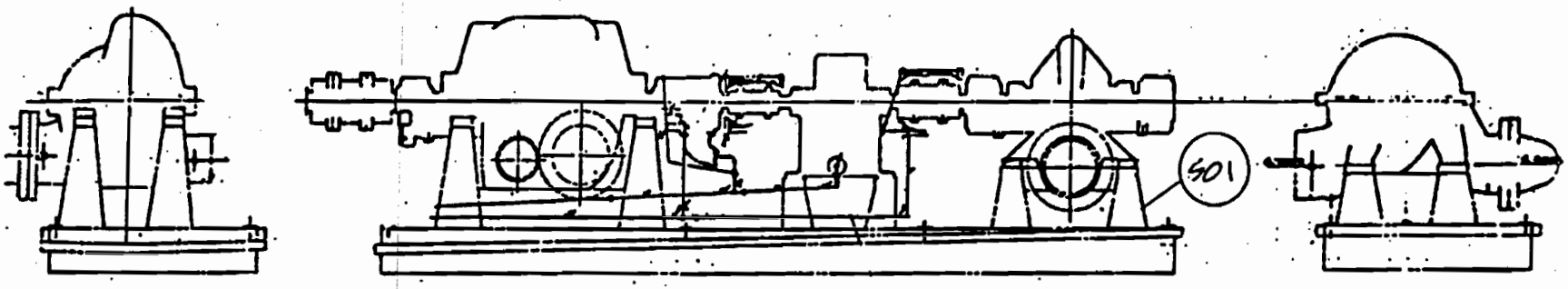

L.H. VIEW

ELEVATION

R.H. VIEW

REF. DWG.: HPCI PUMP
INSTRUCTION MANUAL
S-25701

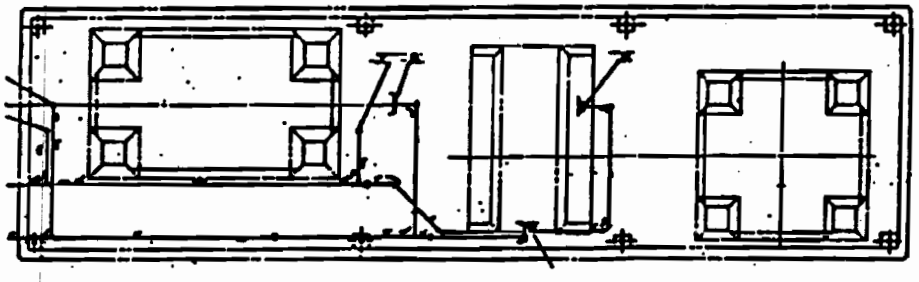

PLAN

HPCI PUMP 2E41-C001

REF. DWG: RCIC PUMP INSTRUCTION MANUAL --- S-26246

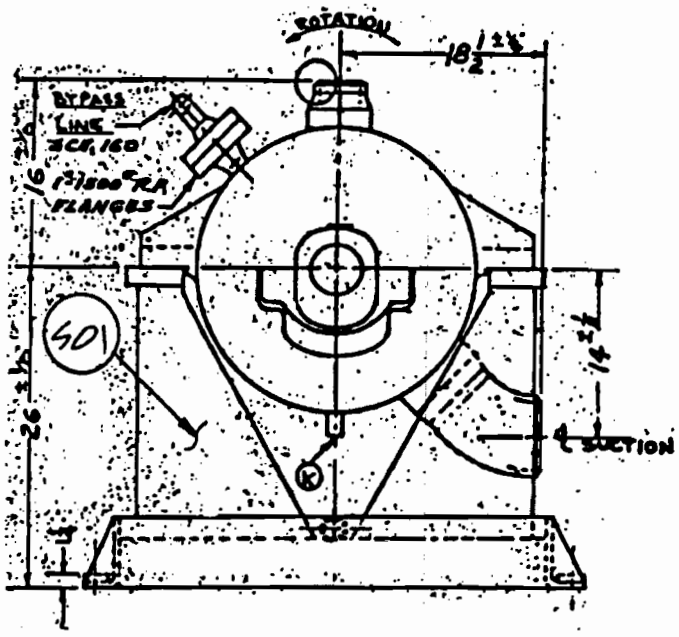

END VIEW

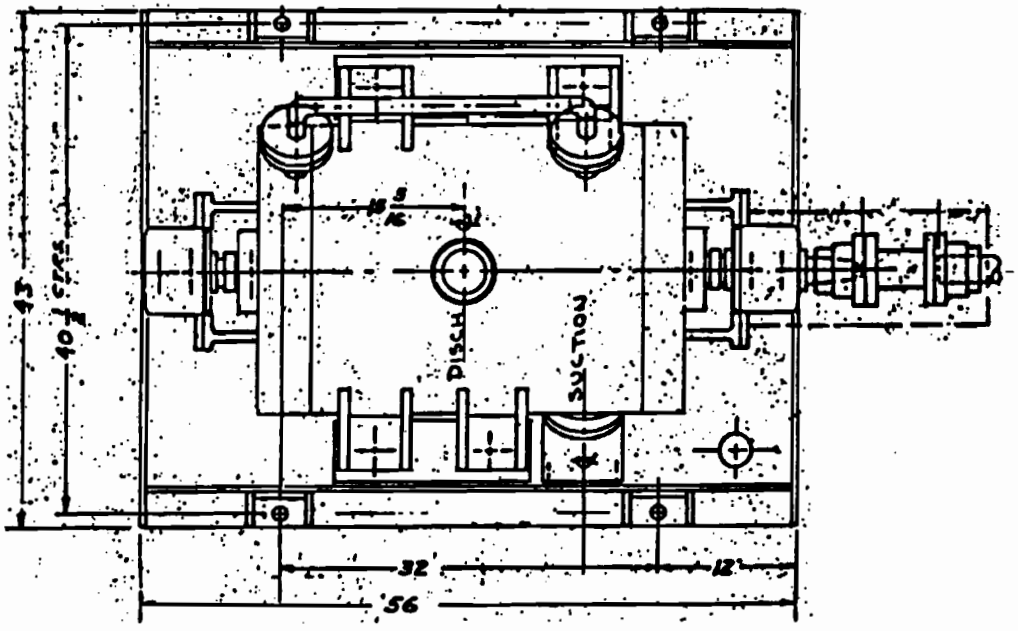

PLAN

RCIC PUMP 2E51-C001

2E51 - SK8

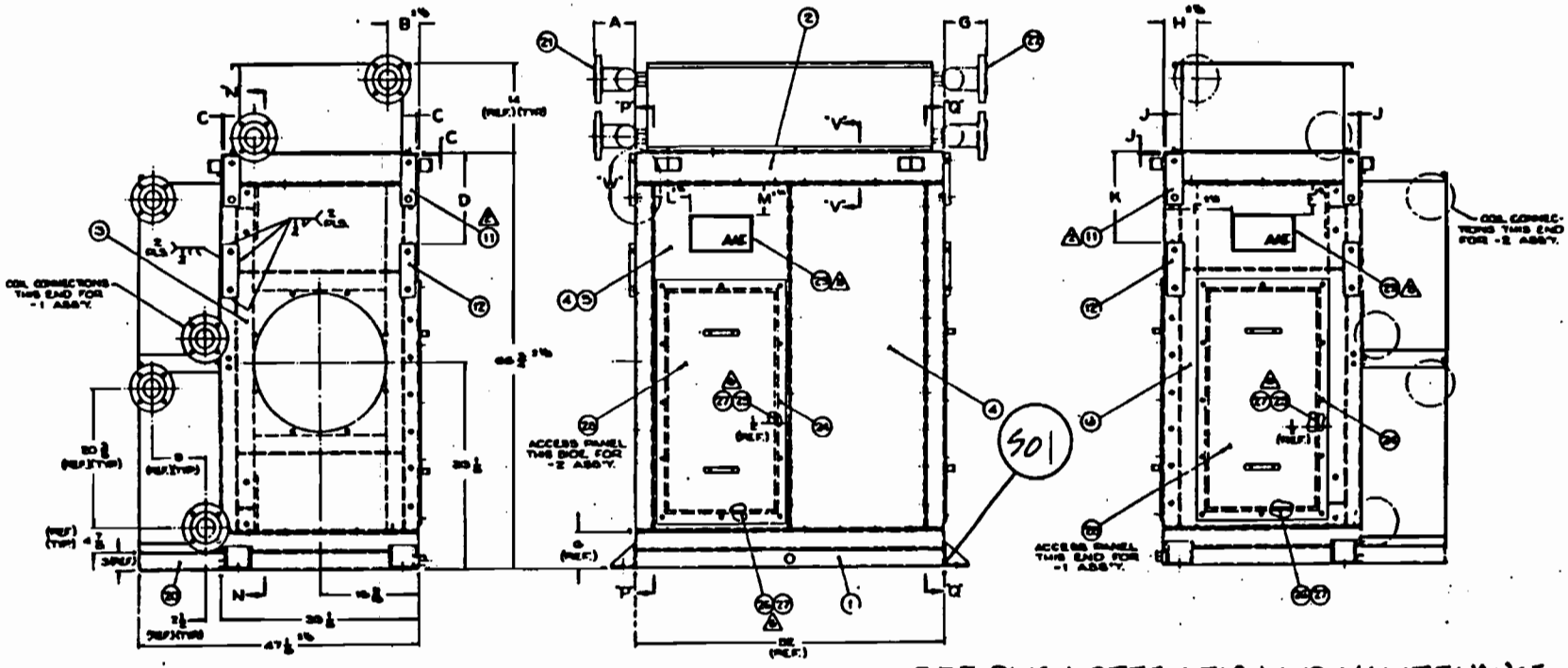

REF. DWG.: OPERATION AND MAINTENANCE MANUAL FOR UNITS B007A/B B008A/B & B009A/B --- SX-23526

FOR UNITS B010A/B -- S-41620

PRIMARY CONTAIMENT COOLING UNITS 2T47-B007A/B
2T47-B008A/B
2T47-B009A/B
2T47-B010A/B

2T47-SK2

REF. DWG.: RHR SERVICE WATER MANUAL SX-2709

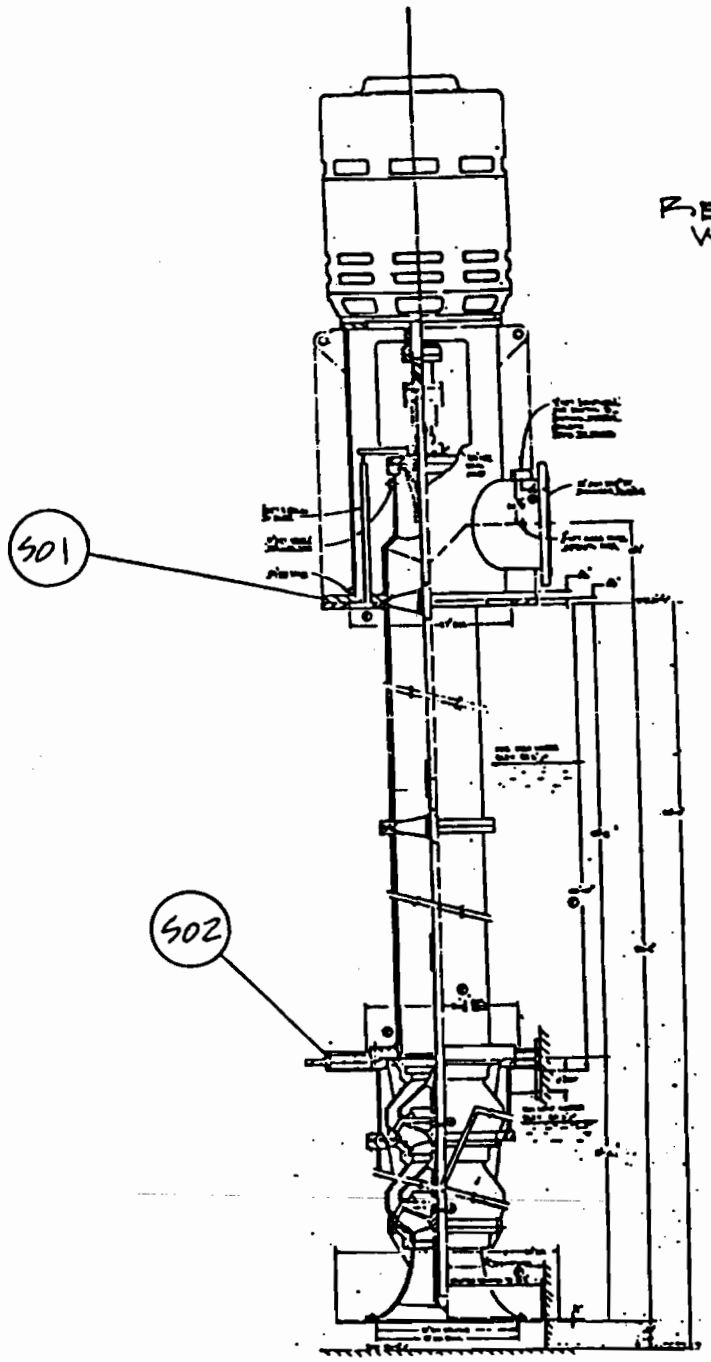

RHR SERVICE WATER PUMP - C001A/B/C/D

2E11-SK10

REF. DWG.: RHR SERVICE
WATER STRAINER
INSTRUCTION MANUAL
SX-28706

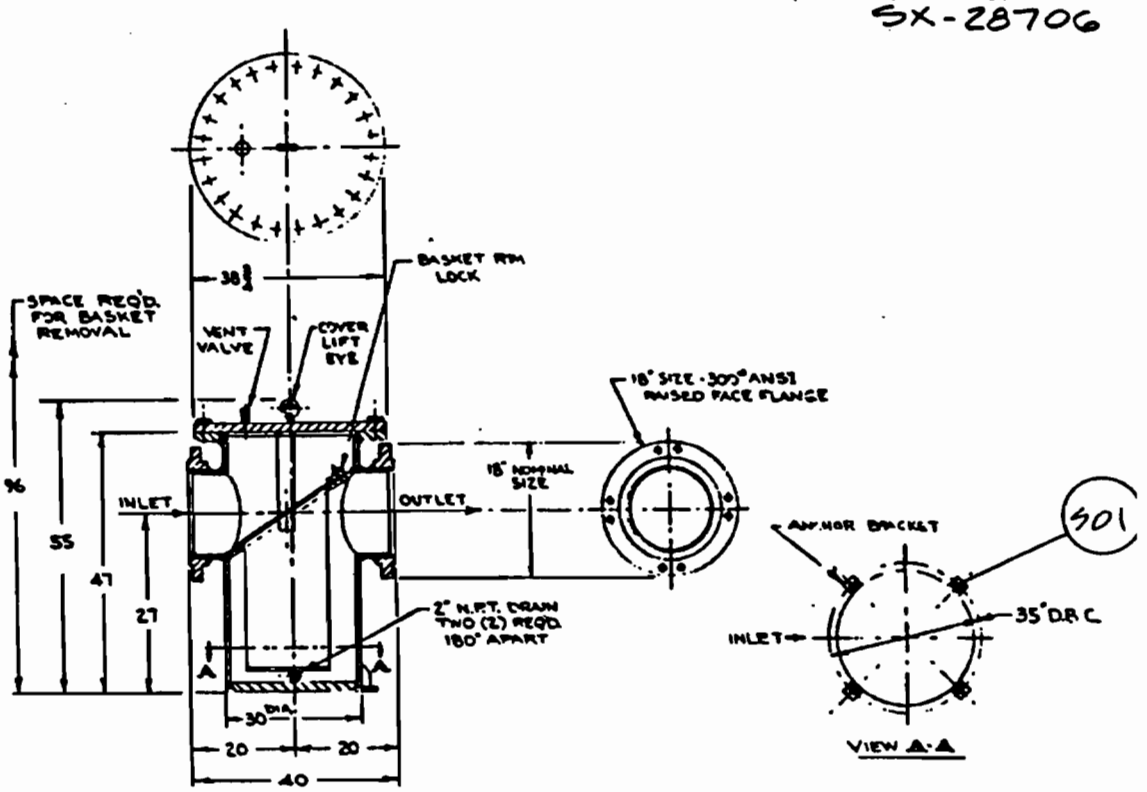

RHR SERVICE WATER STRAINER - 2E11-D002A
2E11-D002B
2E11-D003A
2E11-D003B

2E11-SK 11

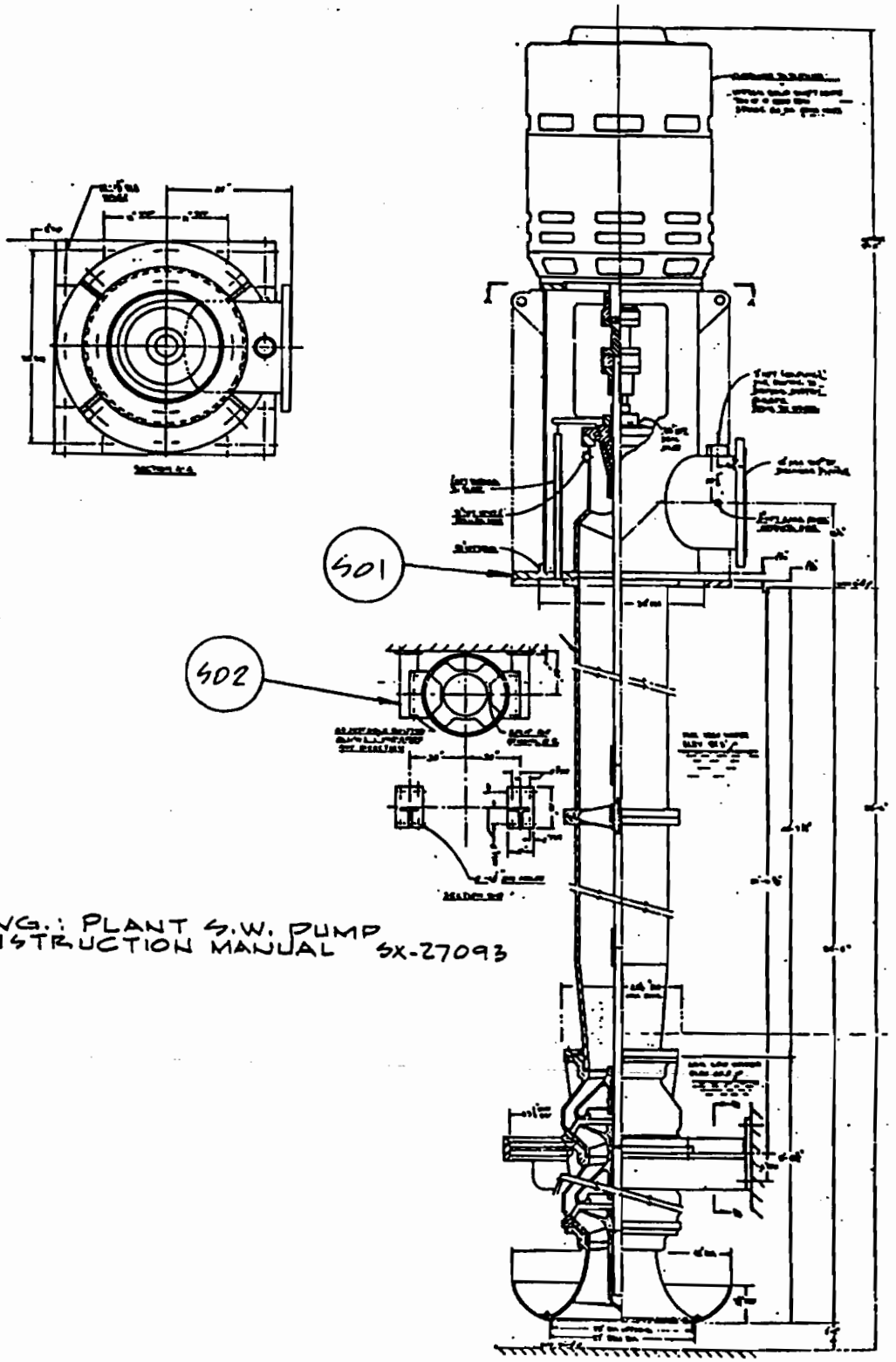

REF. DWG.: PLANT S.W. PUMP
INSTRUCTION MANUAL SX-27093

PLANT S.W. PUMPS - 2P41-C001 A/B/C/D.

2P41-SK12

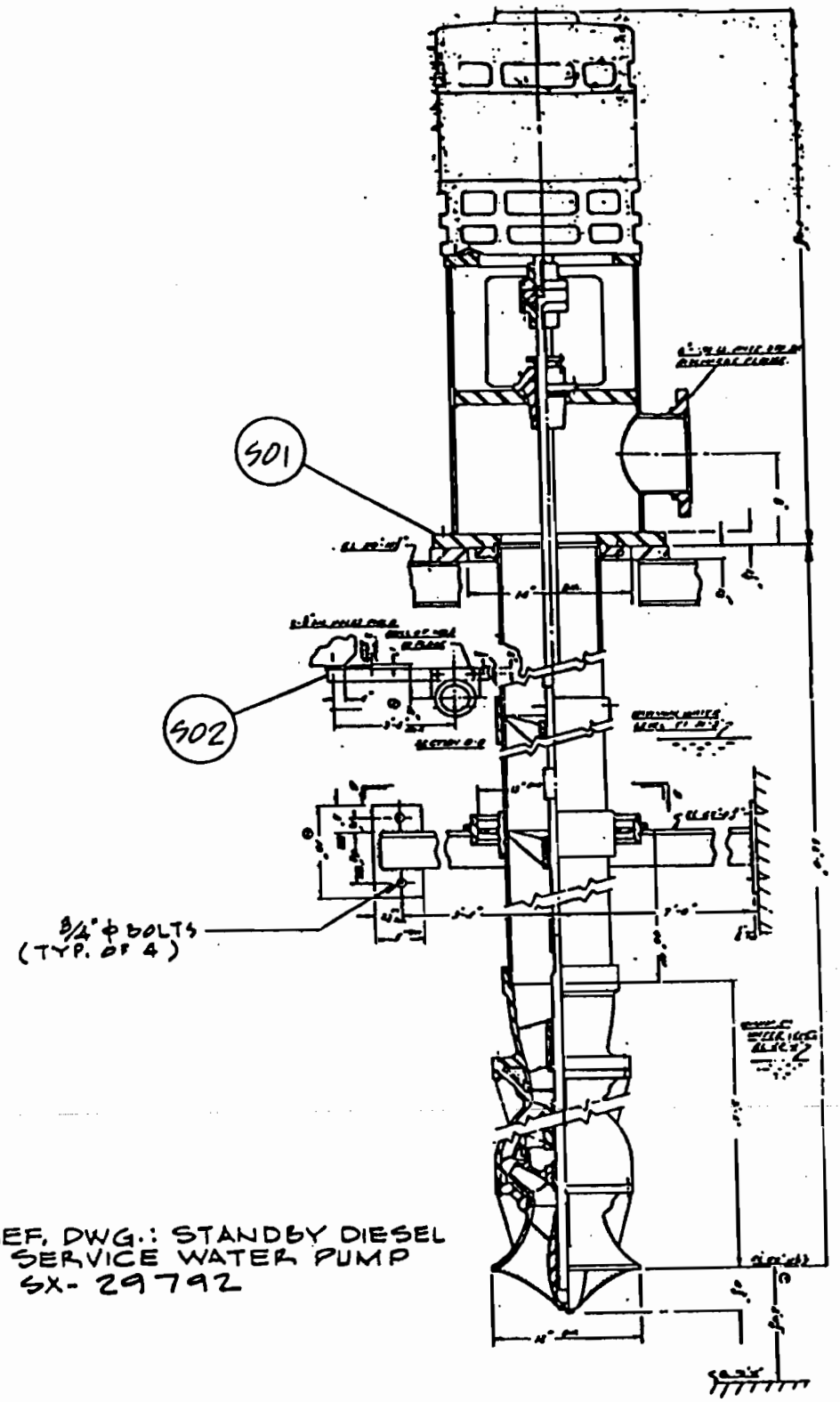

REF. DWG.: STANDBY DIESEL
SERVICE WATER PUMP
SX- 29792

STANDBY DIESEL SERVICE WATER PUMP 2P41-C002

2P41-SK13

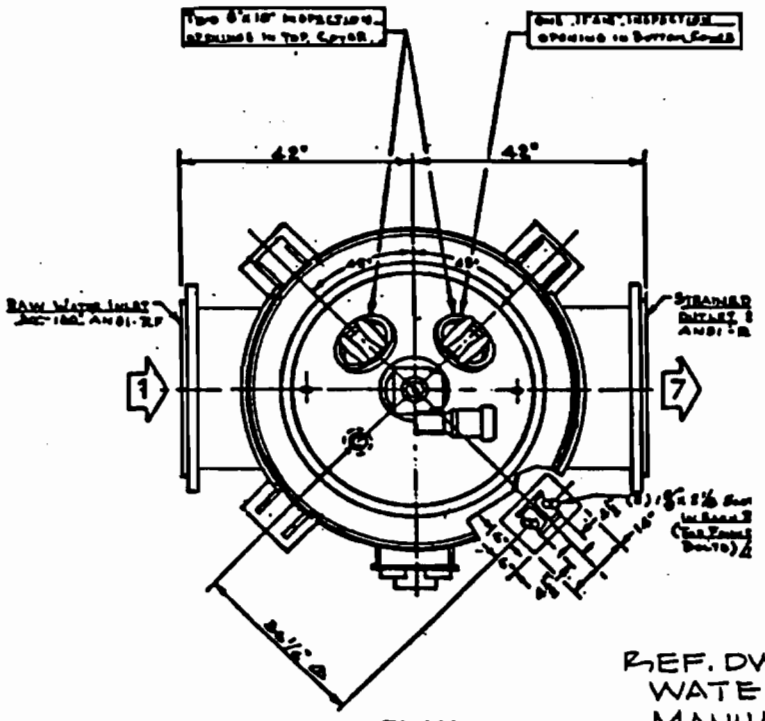

PLAN

REF. DWG.: PLANT SERVICE WATER INSTRUCTION MANUAL S-30316

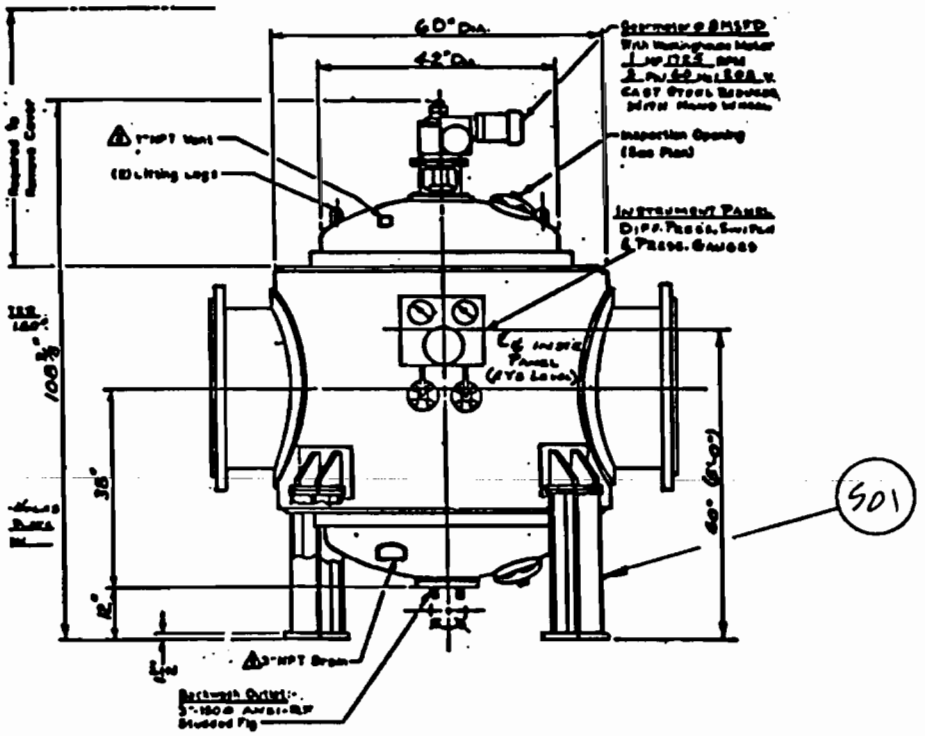

PLANT SERVICE WATER STRAINER - D001A/B

2P41 - SK14

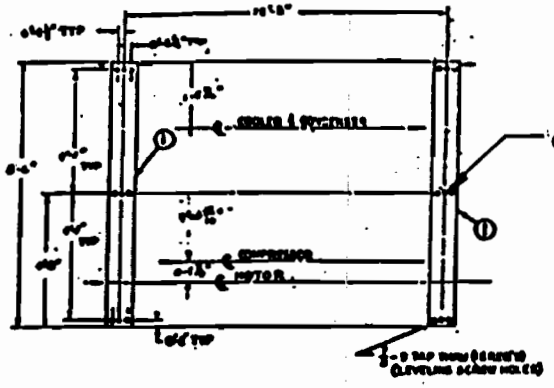

CONDENSER SUPPORT

REF. DWG.: DRYWELL CHILLER
CONDENSER OPERATING
INSTRUCTION MANUAL
SX-23036

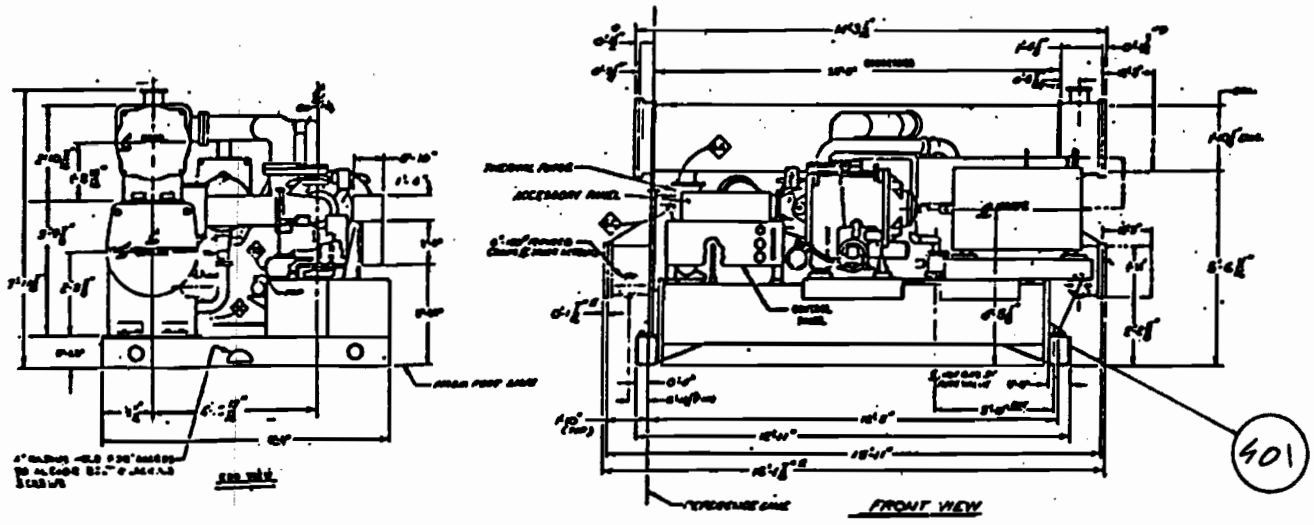

DRYWELL CHILLER CONDENSER 2PG4-B006A/B

2PG4-SK15

REF. DWG.: REACTOR BLDG.
COOLING UNITS MAINTENANCE
MANUAL - - - SX-23528

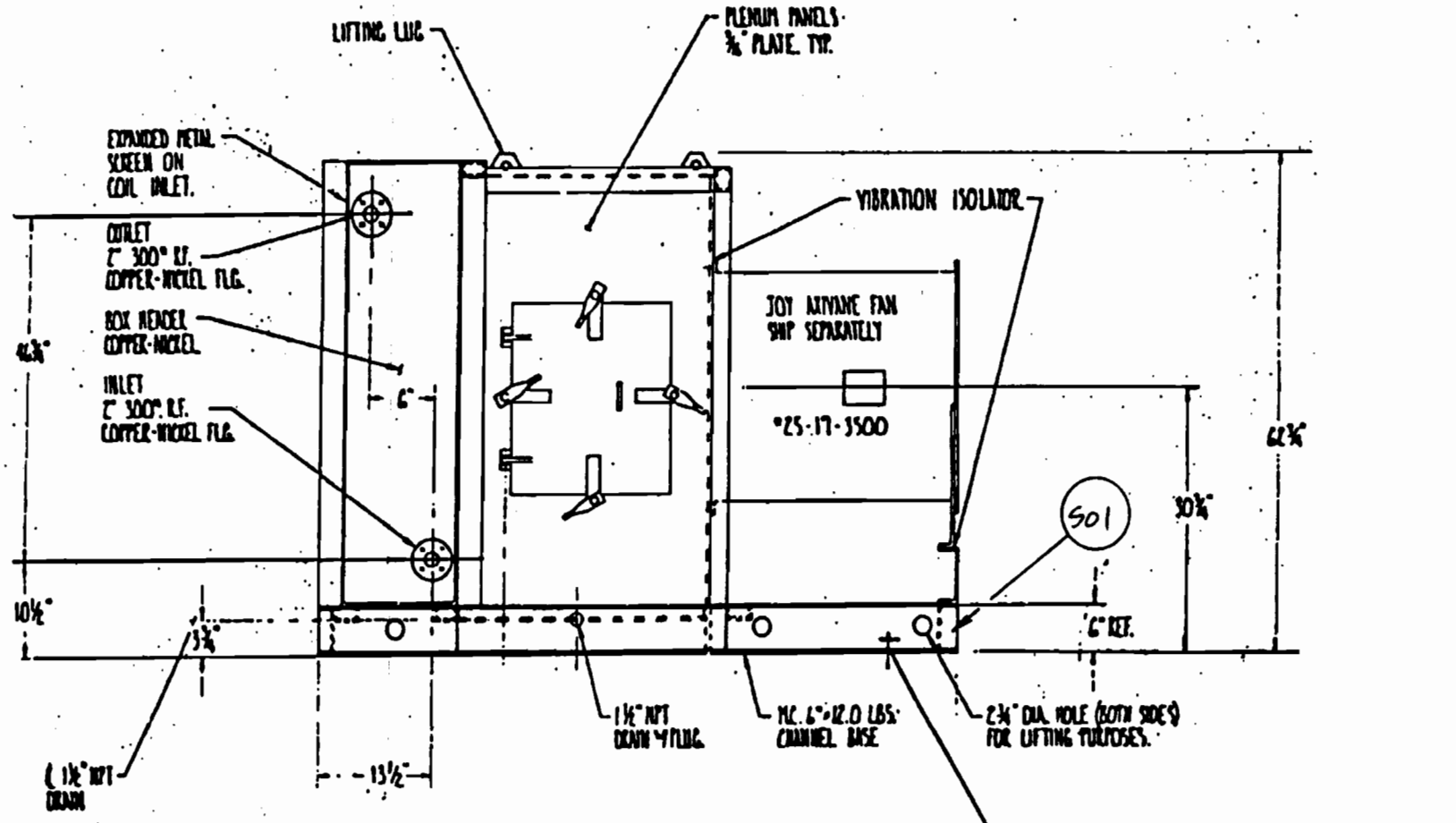

2T41-RHR & CS PUMP RM. COOLER B002A/B

2T41 SX 16

REF. DWG.: REACTOR BLDG.
COOLING UNITS MAINTENANCE
MANUAL - - - SX-23528

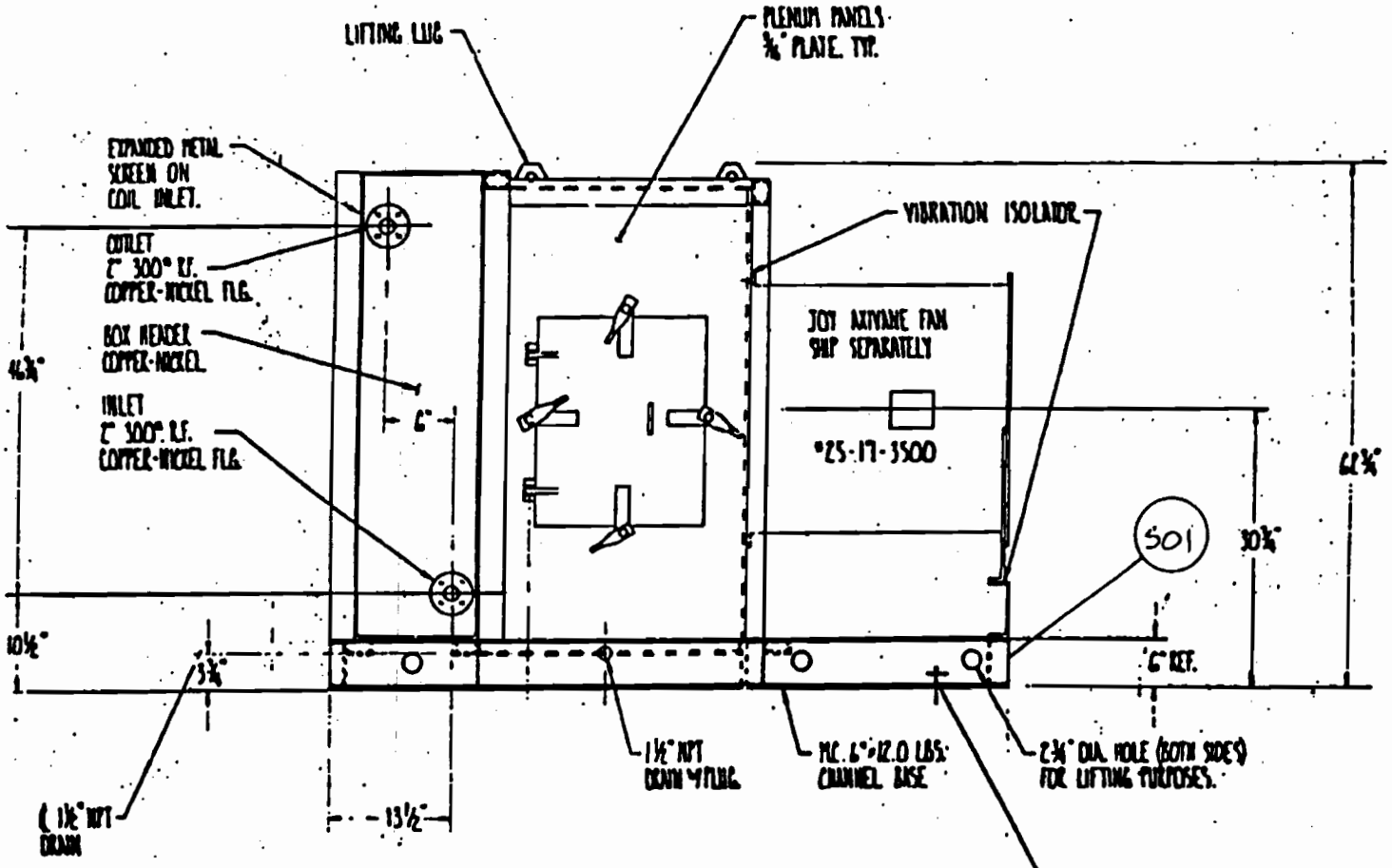

ZT41 - RHR & CS PUMP RM. COOLER B003A/B

REF. DWG.: REACTOR BLDG.
COOLING UNITS MAINTENANCE
MANUAL - - - SX-23528

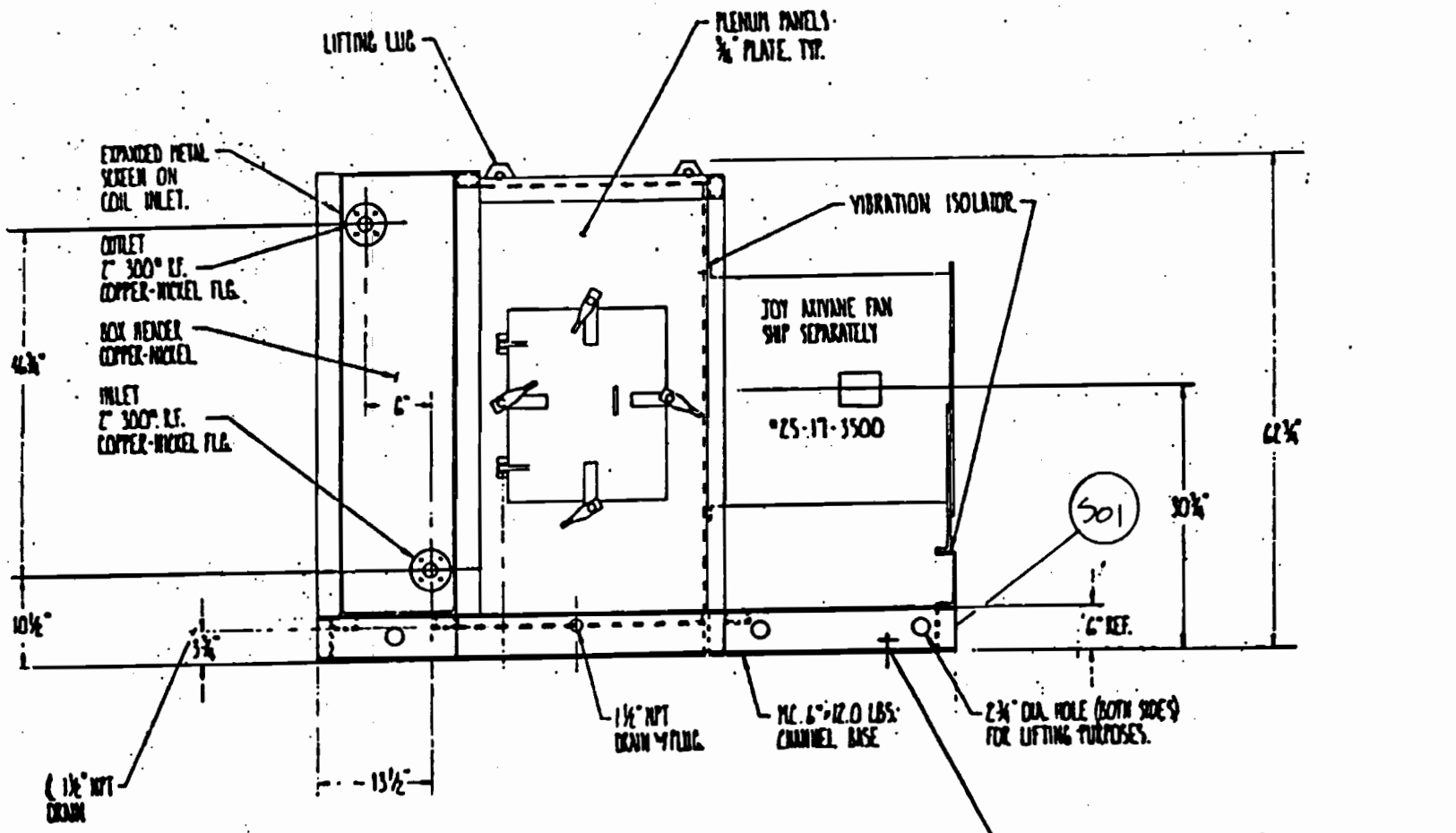

HPCI PUMP RM. COOLER B005A/B

2T41-SK18

REF. DWG.: O.& M. MANUAL S41027

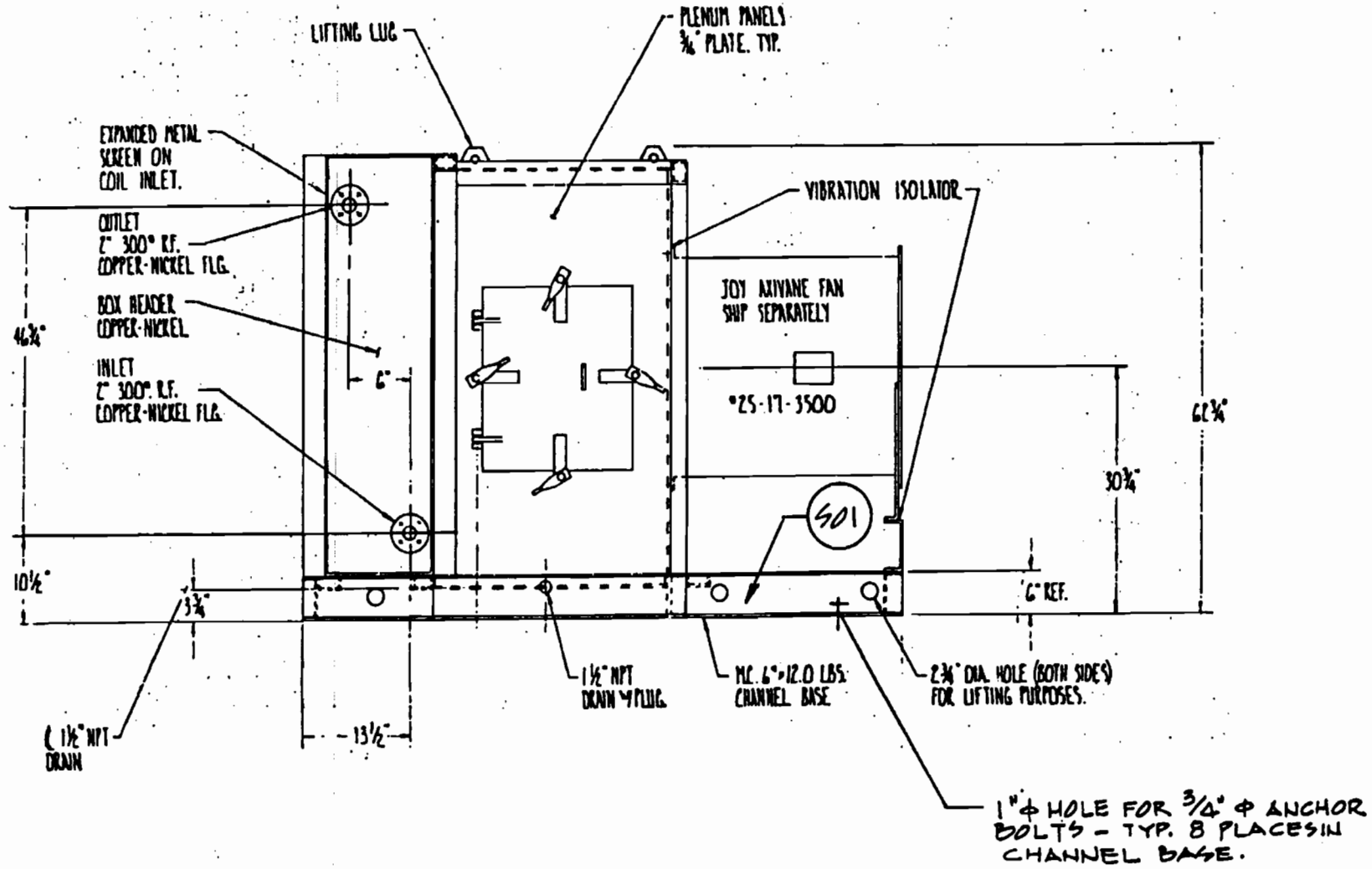

LPCI INVERTER ROOM COOLER 2Z41-B020A/B

2Z41-SK19

Hatch Unit 2 Fourth Ten Year Inservice Inspection Plan
Class 1 Figures

Figure No.	Rev. No.	Description
A-1	5	RPV Shell Stretch Out - Nozzle to Vessel Welds
A-1A	5	RPV Bottom Head Meridional and Circumferential Welds
A-2	-	Not used
A-3	4	RPV Closure Head Meridional and Circumferential and Nozzle-to-Head Welds
A-4	2	Recirculation Pump Lugs Class 1 - Drywell
A-5	1	Main Steam in Drywell
A-6	7	Main Steam in Drywell - Line A
A-7	8	Main Steam in Drywell - Line B
A-8	8	Main Steam in Drywell - Line C
A-9	7	Main Steam in Drywell - Line D
A-10	6	Feedwater to Nozzles A & B – Drywell
A-11	6	Feedwater to Nozzles C & D – Drywell
A-12	7	Feedwater Line "A" – Drywell
A-13	7	Feedwater Line "B" – Drywell
A-14	4	Reactor Recirculation System Loop "A" – Drywell
A-15	5	Reactor Recirculation System Loop "B" – Drywell
A-16	8	Recirculation Pump "A" Suction – Drywell
A-16A	1	Loop A Drain Line – Drywell
A-17	6	Recirculation Pump "A" Discharge - Drywell
A-18	8	Recirculation Pump "B" Suction - Drywell
A-18A	1	Loop B Drain Line – Drywell

Figure No.	Rev. No.	Description
A-19	6	Recirculation Pump "B" Discharge – Drywell
A-20	7	RHR System Head Spray - Drywell and Refueling Floor
A-21	7	RHR Shutdown Cooling System - Drywell and East Penetration Room
A-22	9	RHR LPCI Side "A" - Drywell and East Penetration Room
A-23	9	RHR LPCI Side "B" - Drywell and East Penetration Room
A-24	7	Core Spray Pump "A" Discharge to RV - Drywell
A-25	8	Core Spray Pump "B" Discharge to RV - Drywell
A-26	8	HPCI Turbine Steam Supply - Drywell
A-27	9	RCIC Turbine Steam Supply - Drywell
A-28	6	RWCU Pump Suction
A-28A	0	RPV & RWCU Bottom Head Drain Piping – Drywell
A-29	3	CRD Weld and Flange Bolting
A-30	-	Not Used
A-31	-	Not Used
A-32	0	RPV Stabilizer Bracket
A-33	1	RPV Closure Head Stud Identification
A-34	0	RPV Support Skirt Attachment
A-35	1	Feedwater Nozzles 2N4A and D, Safe End and Safe End Extension
A-36	1	Feedwater Nozzles 2N4B and C, Safe End and Safe End Extension
A-37	0	Jet Pump Instrumentation Nozzle - Reactor Vessel

Figure No.	Rev. No.	Description
A-39	0	Standby Liquid Control - Drywell
A-40	0	Standby Liquid Control - Drywell
A-41	0	Standby Liquid Control – Drywell

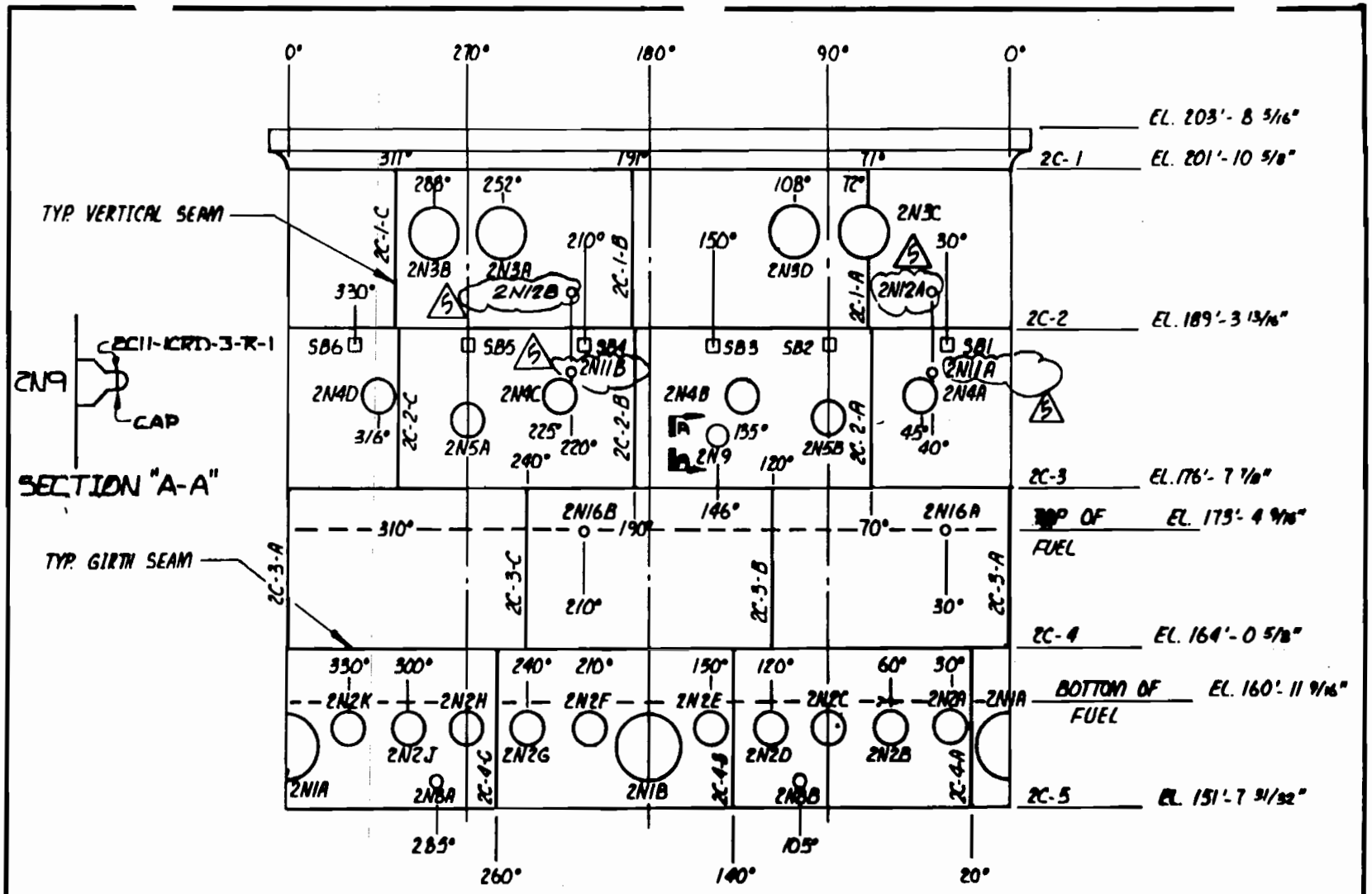

EDWIN I. HATCH UNIT-2 RPV SHELL STRETCH OUT - NOZZLE TO VESSEL WELDS

2	2-2-92	CJS	WS	WG
1	1-23-87	RST	KWF	[illegible]
3	1-21-87	M.D.	[illegible]	[illegible]

FIGURE A-1

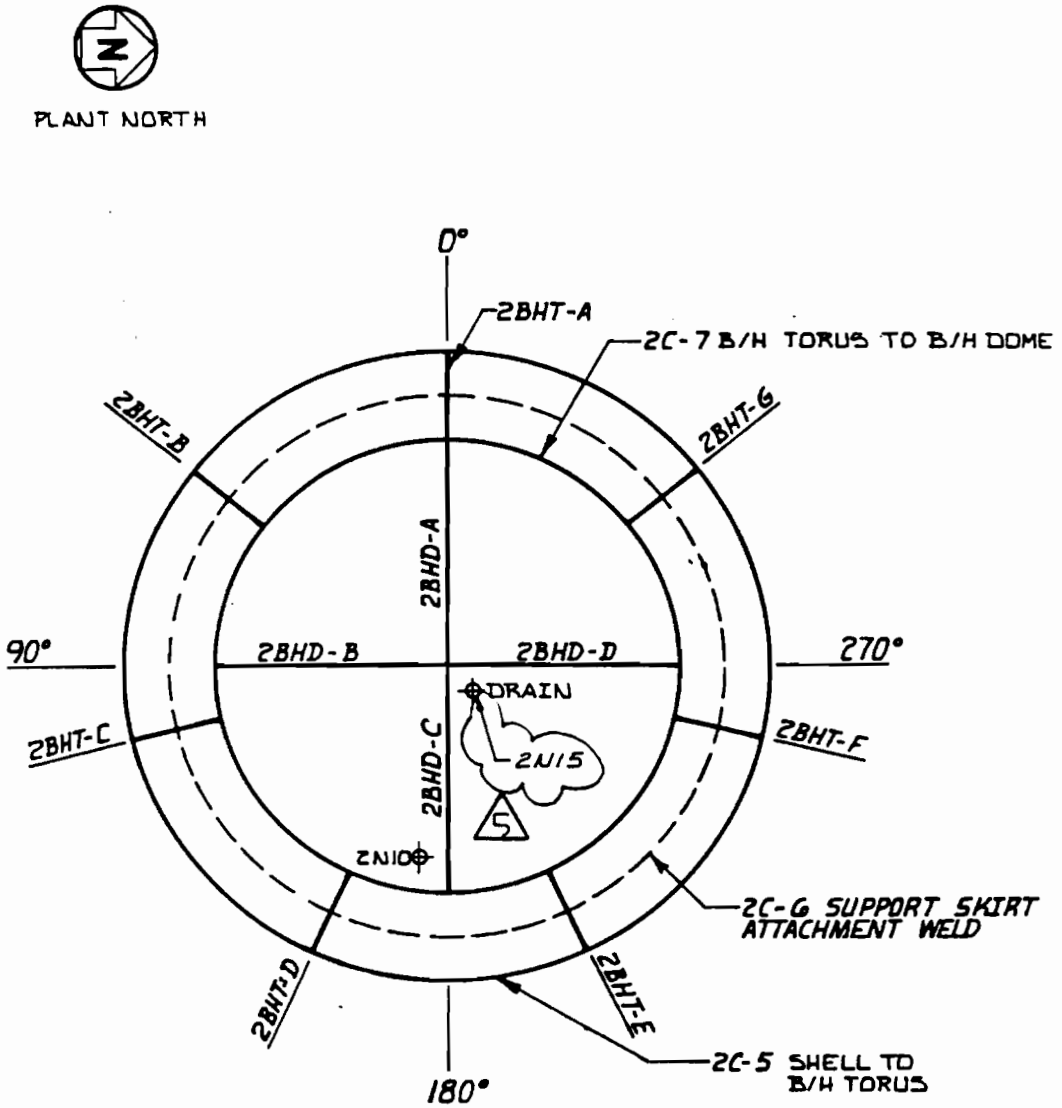

EDWIN I. HATCH UNIT 2 RPV
BOTTOM HEAD MERIDIONAL & CIRCUMFERENTIAL WELDS (VIEWED FROM BOTTOM)
FIGURE A-1A

REV.	DATE	BY	CHK'D	APPR. 1
5	8-13-91	WGS	WS	WHC
4	4-3-87	BST	CWD	MB
3	1-21-87	E.J.O.	W.S.	MB

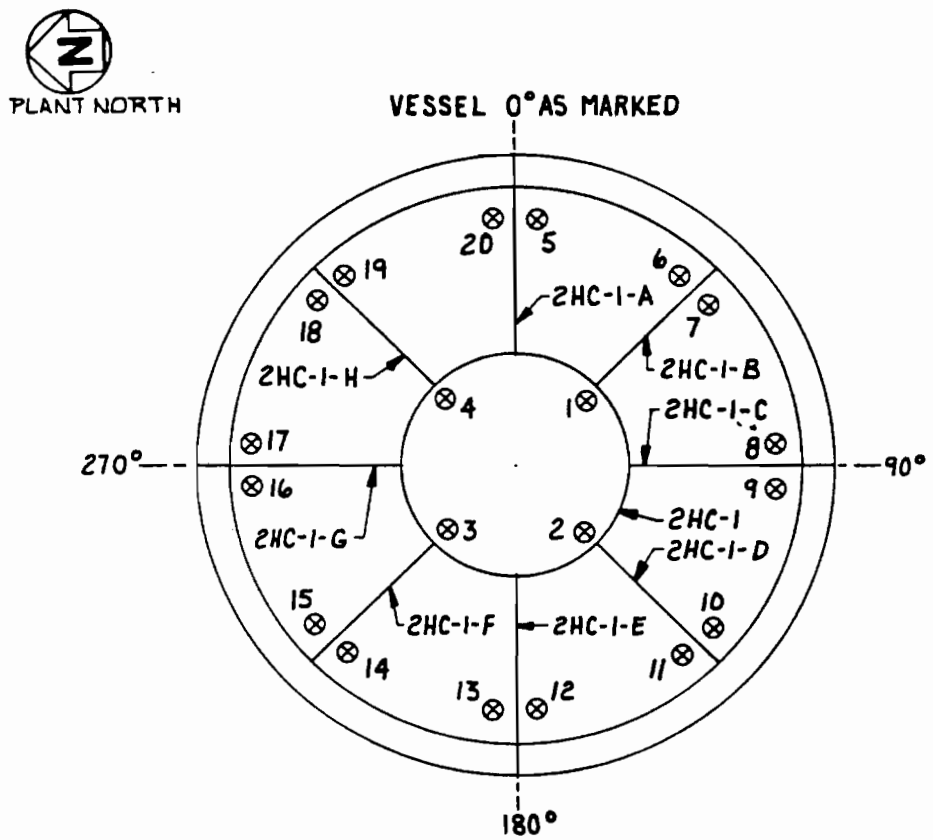

FIGURE A-2

HATCH 2 LOCATION OF ULTRASONIC THICKNESS MEASUREMENTS OF THE RPV CLOSURE HEAD

REV	DATE	BY	CHK'D	APPR. 1
1	2-13-87	BST	WS	CWD

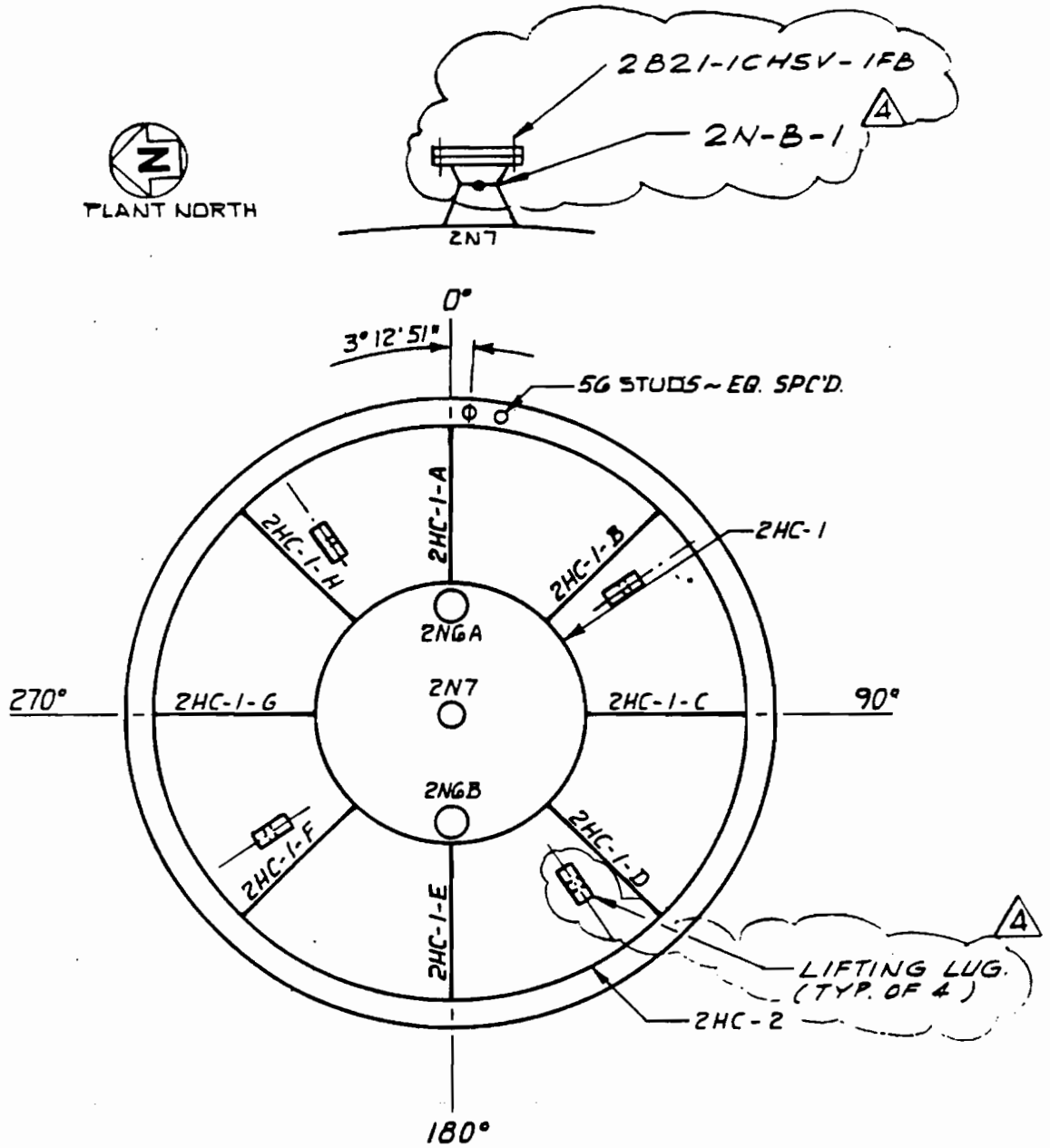

EDWIN I. HATCH UNIT 2 RPV
CLOSURE HEAD MERIDIONAL & CIRCUMFERENTIAL
AND NOZZLE-TO-HEAD WELDS
FIGURE A-3

REV.	DATE	BY	CHK'D	APPR. 1
4	9/27/93	WS	[illegible]	WC
3	4-13-87	BST	BKG	CWD
2	1-21-87	E.J.D.	WS	MB

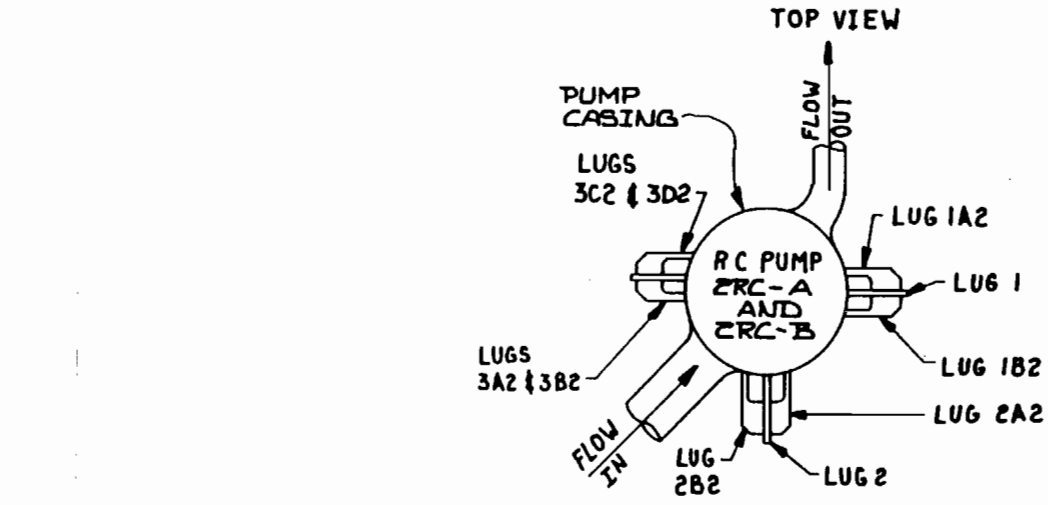

2RC-A (OR B) PUMP LUG-1 (OR 2) ALSO -1A2
-1B2
-2A2
-2B2

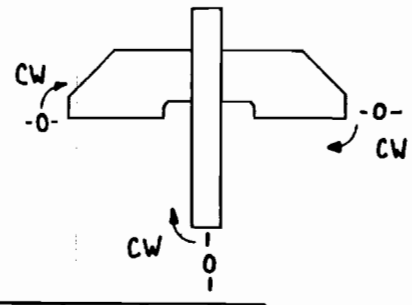

2RC-A (OR B) PUMP LUG-3A2
-3B2
-3C2
-3D2

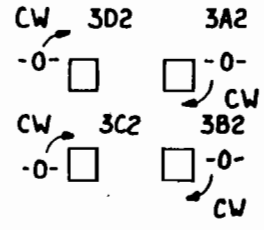

REV	DATE	BY	CHK'D	APPR 1
2	4-13-87	BST	BKG	CWD
1	2-13-87	BST	WS	CWD

FIGURE A-4 RECIRCULATION PUMP LUGS CLASS I
LOCATION: DRYWELL

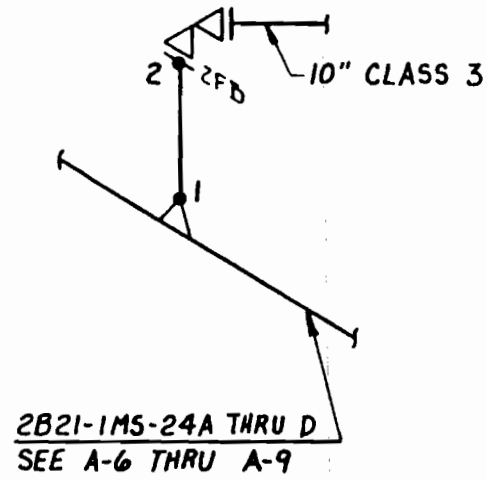

MAIN STEAM SYSTEM
CAL BLOCK: 8-CS-140-0.812-81-H
LOCATION: DRYWELL

2B21-1MS-8A-ASR TO 2B21-F013E
2B21-1MS-8A-BSR TO 2B21-F013A
2B21-1MS-8B-ASR TO 2B21-F013L
2B21-1MS-8B-BSR TO 2B21-F013K
2B21-1MS-8B-CSR TO 2B21-F013F
2B21-1MS-8B-DSR TO 2B21-F013B
2B21-1MS-8C-ASR TO 2B21-F013M
2B21-1MS-8C-BSR TO 2B21-F013G
2B21-1MS-8C-CSR TO 2B21-F013C
2B21-1MS-8D-ASR TO 2B21-F013H
2B21-1MS-8D-BSR TO 2B21-F013D

FIGURE A-5

REV	DATE	BY	CHK'D	APPR 1
1	2-13-87	DST	WS	CWD

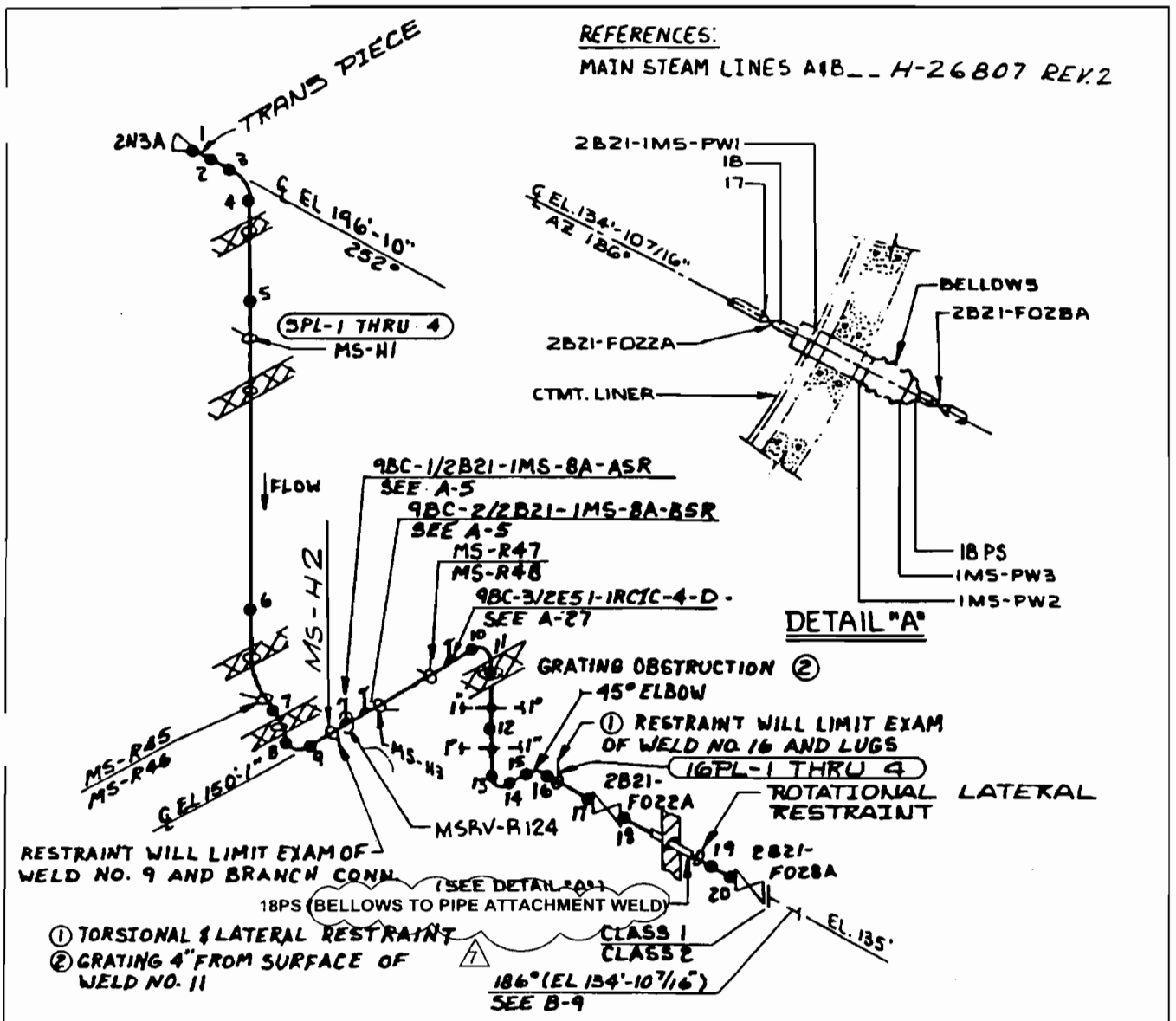

MAIN STEAM "A" IN DRYWELL
2B21-1MS-24A
MAIN STEAM SYSTEM
HATCH 2, CLASS 1

~~LOCATION: DRYWELL~~
NOTE: ALL DEVICE NO. PRECEDED BY 2B21

7	10-14-04	TAS		DDS
REV.	DATE	BY	CHK'D	APPR. 1

FIGURE A- 6

REFERENCES:
MAIN STEAM LINES A&B
-26807 REV.2

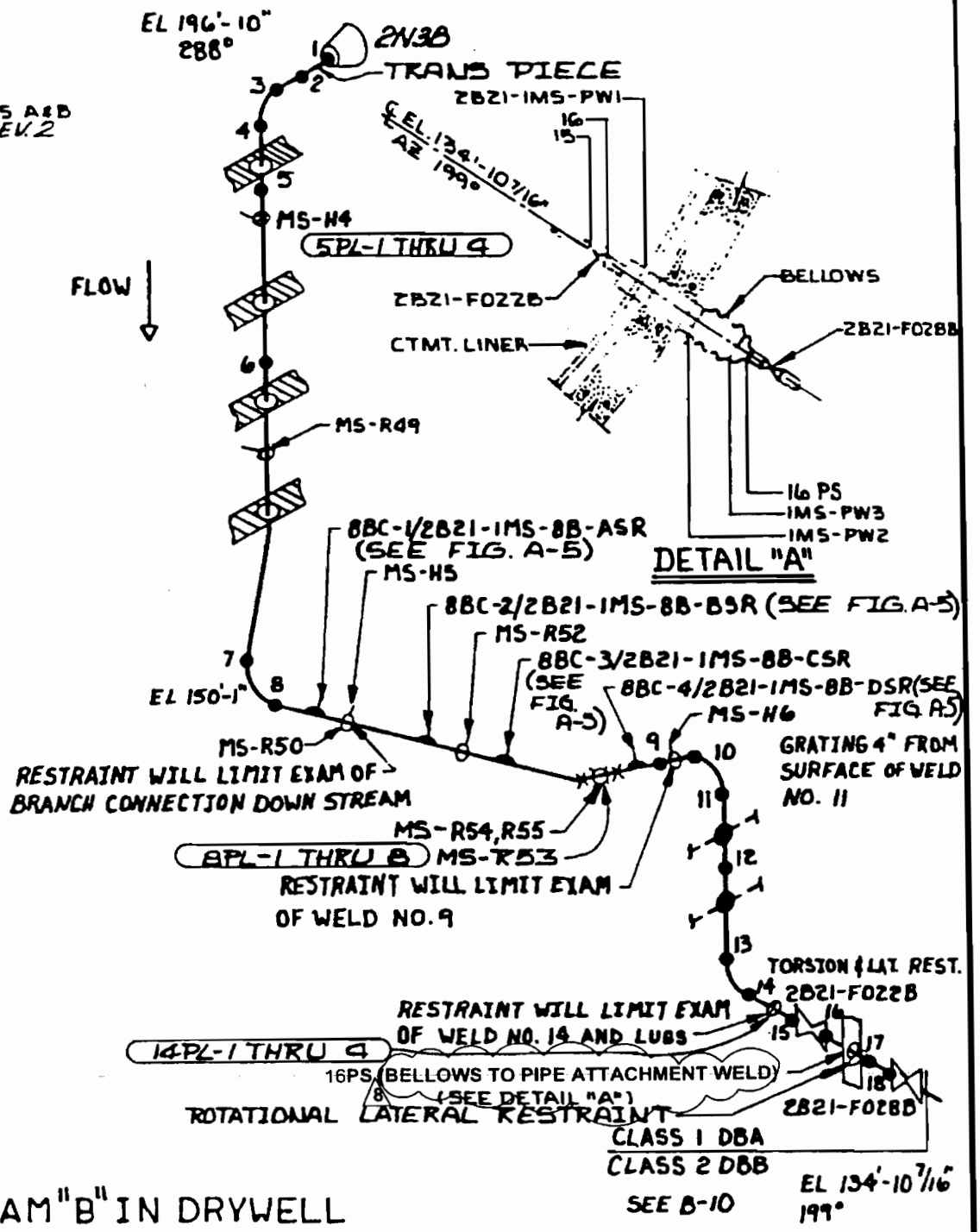

MAIN STEAM "B" IN DRYWELL
2B21-1MS-24 B
MAIN STEAM SYS.

FIGURE A-7

CATION: DRYWELL
NOTE: ALL DEVICE NUMBERS PRECEDED BY 2B21

REV	DATE	BY	CHK'D	APPR 1
8	10-14-04	TAS	RJJ	DDS
6	11-30-90	WGS	WS	WHC
5	4-13-87	BST	BKG	CWD
7	9-23-92	WS	WC	[illegible]

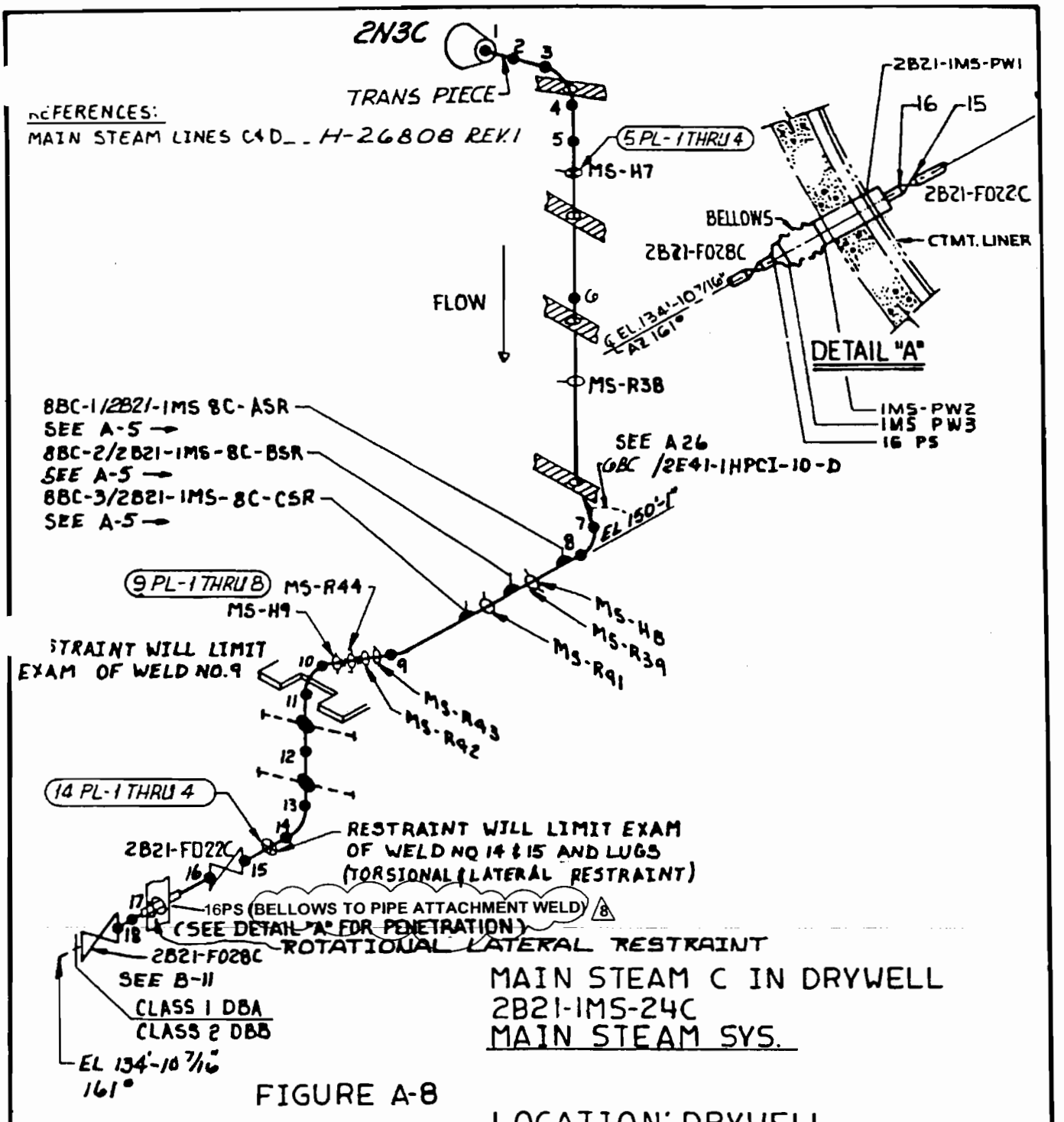

MAIN STEAM C IN DRYWELL
2B21-1MS-24C
MAIN STEAM SYS.

FIGURE A-8

LOCATION: DRYWELL
~~NOTE: ALL DEVICE NUMBERS~~
PRECEDED BY 2B21

REV.	DATE	BY	CHK'D	APPR. 1
6	5-5-87	BST	BKG	CVD
5	4-3-87	BST	CWD	MB
	10-14-04	TAS	KGD	DDS
1	11-30-90	WGS	WS	WHC

REFERENCES:

MAIN STEAM LINES C&D_ H-26808 REV.1

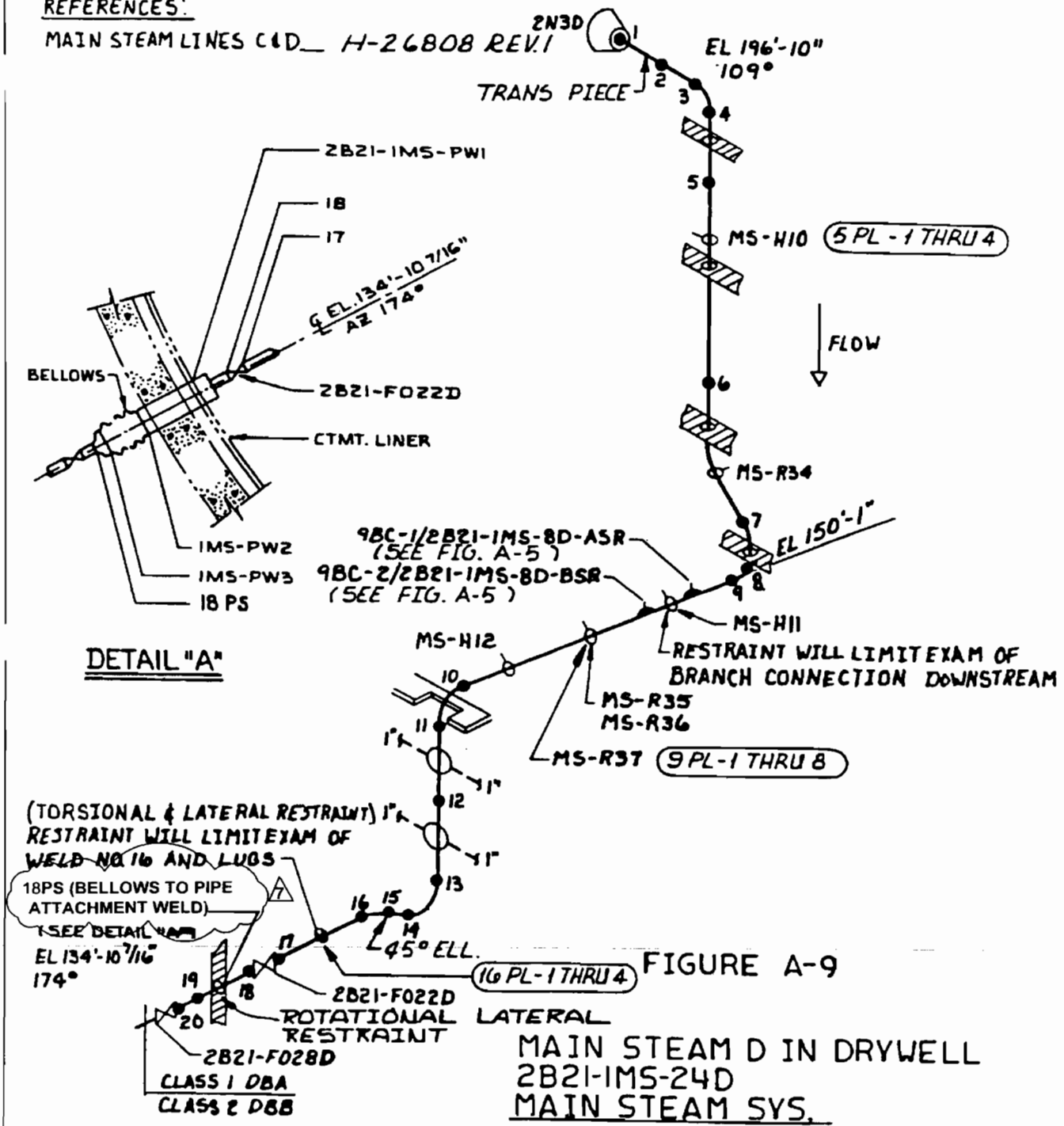

FIGURE A-9

MAIN STEAM D IN DRYWELL
2B21-1MS-24D
MAIN STEAM SYS.

7	10-14-04	TAS		DDS
REV.	DATE	BY	CHK'D	APPR. 1

~~LOCATION: DRYWELL~~
NOTE: ALL DEVICE NUMBERS
PRECEDED BY 2B21

REFERENCES:
FEEDWATER SYSTEM PIPING
IN REACTOR BUILDING ___ H-26800 REV.1

FEEDWATER TO NOZZLES A&B
2B21-1FW-12AA
2B21-1FW-12AB
FEEDWATER SYSTEM

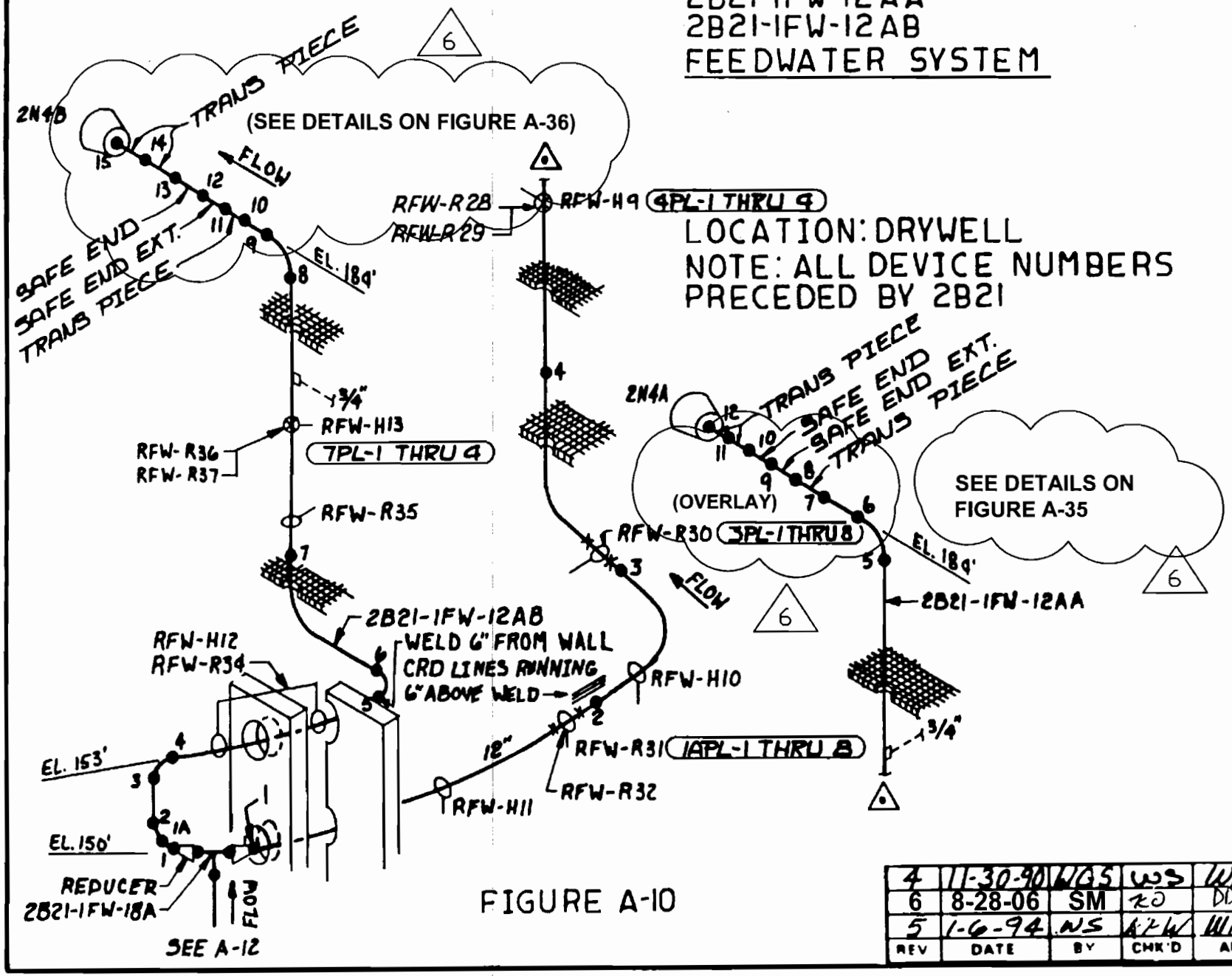

FIGURE A-10

REV	DATE	BY	CHK'D	APPR 1
4	11-30-90	WGS	WS	WHC
6	8-28-06	SM	RD	DDS
5	1-6-94	WS	AZW	WHC

REFERENCES:

FEEDWATER SYSTEM PIPING IN REACTOR BUILDING _ _ _ H-26800 REV.1

FEEDWATER TO NOZZLES C&D
2B21-1FW-12BC
2B21-1FW-12BD
FEEDWATER SYSTEM

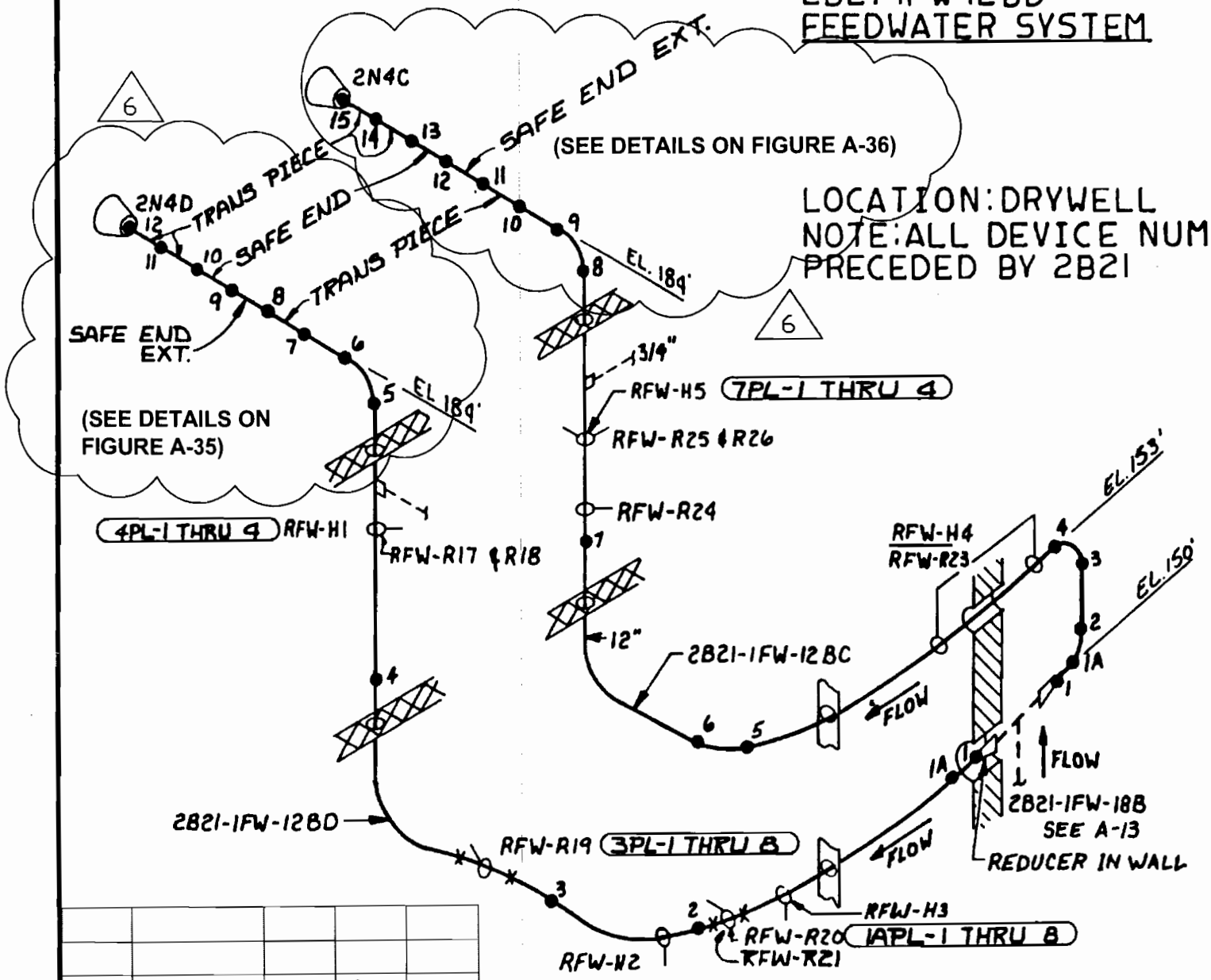

LOCATION: DRYWELL

NOTE: ALL DEVICE NUMBERS PRECEDED BY 2B21

REV.	DATE	BY	CHK'D	APP.1
6	8-30-06	SM	KO	DOS
5	11-30-90	WGS	WS	WHC

FIGURE A-11

FEEDWATER LINE "A"
2B21-1FW-18A
FEEDWATER SYSTEM

LOCATION: DRYWELL

REFERENCES:

FEEDWATER SYSTEM PIPING
IN REACTOR BUILDING _ _ _ H-26800 REV. 1

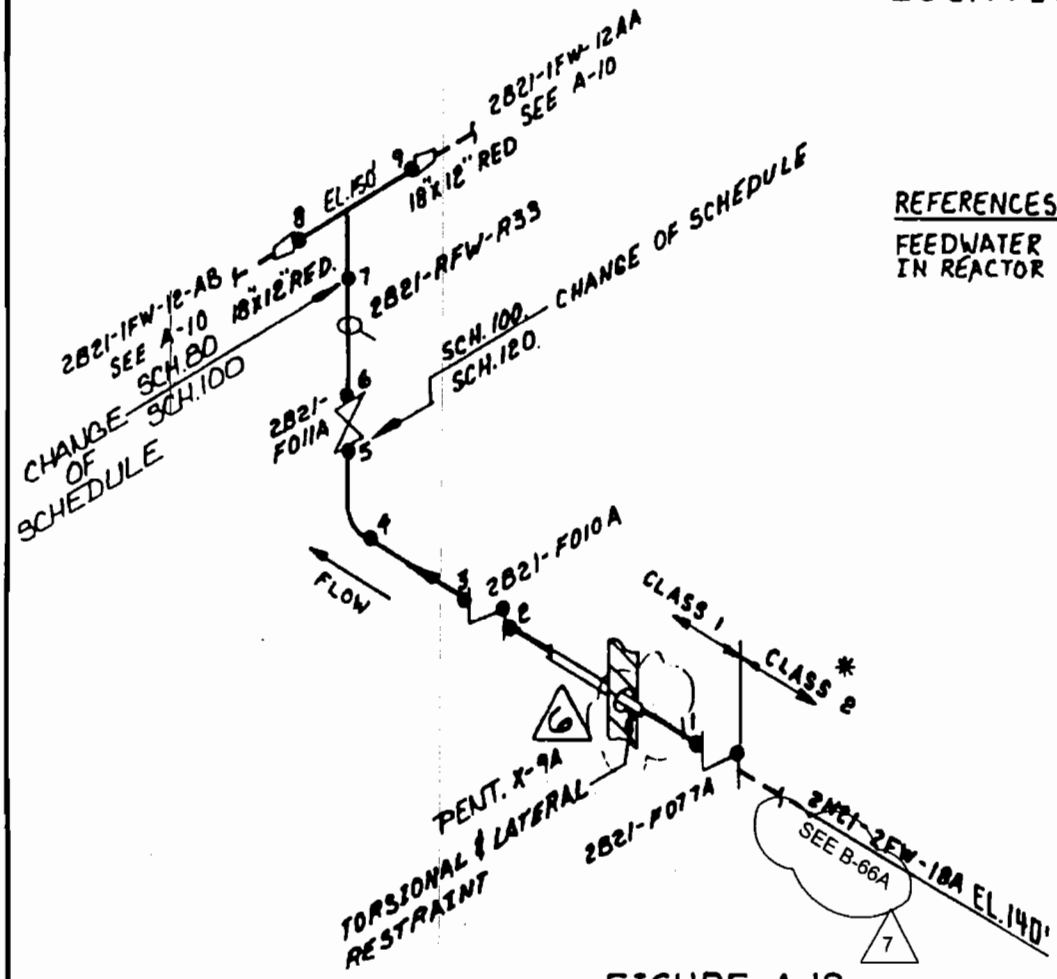

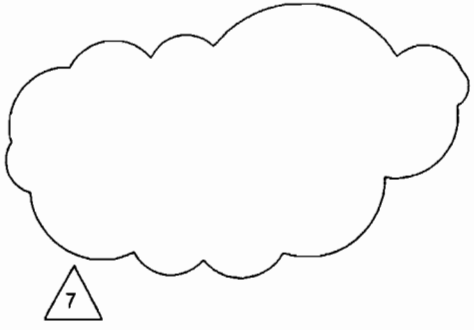

FIGURE A-12

7	10-14-04	TAS	KSL	DDS
REV.	DATE	BY	CHK'D	APPR. 1

REFERENCES:
FEEDWATER STSTEM PIPING
IN REACTOR BUILDING _ _ H-26800 REV. 1

FEEDWATER LINE "B"
2B21-1FW-18B
FEEDWATER SYSTEM

LOCATION: DRYWELL

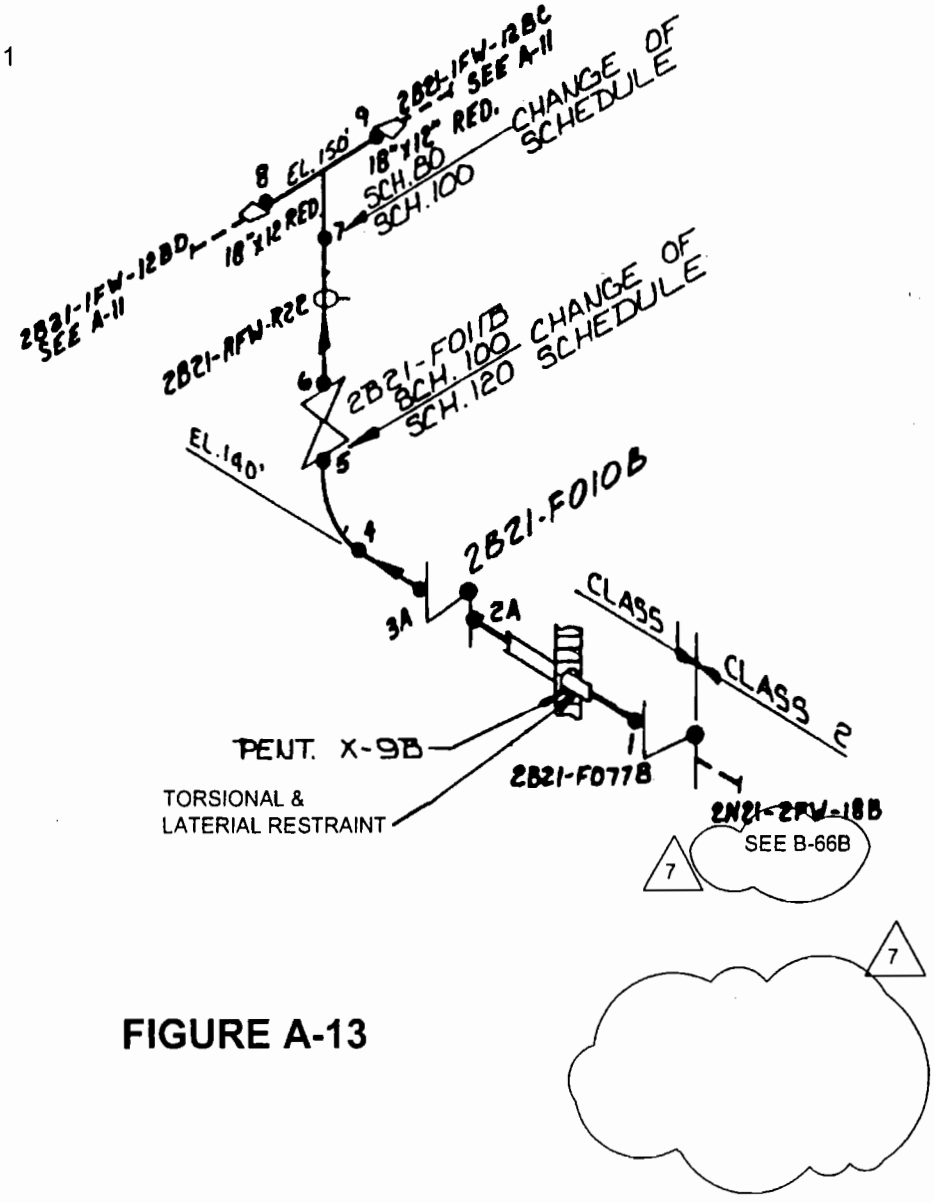

FIGURE A-13

7	10-14-04	TAS		
REV.	DATE	BY	CHK'D	APPR. 1

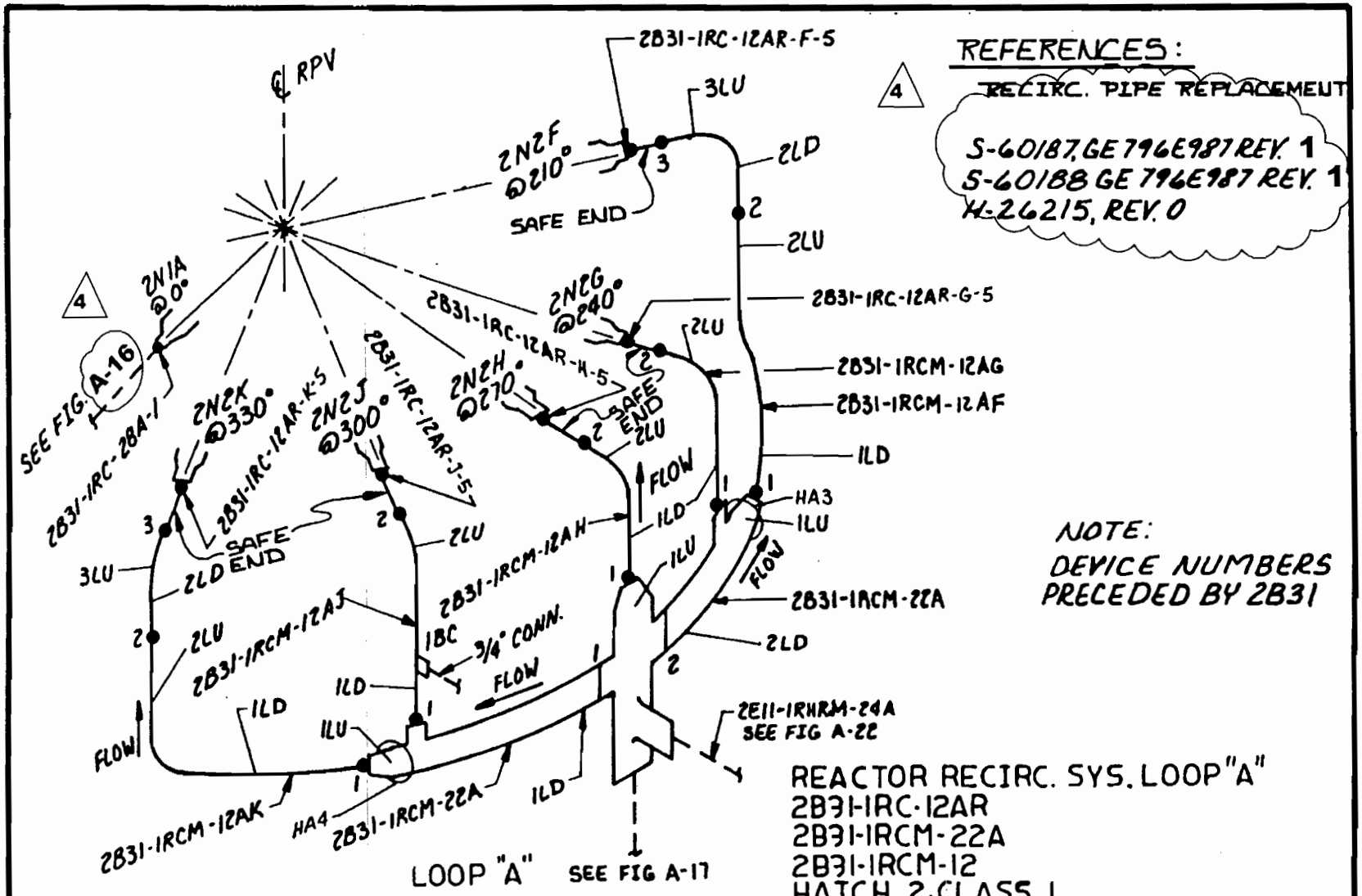

REV.	DATE	BY	CHK'D	APPR 1
4	9-23-04	TAS	MB	DDS
3	11-30-90	WGS	WS	WHC
2	4-13-87	BST	DMG	CWD
1	2-17-87	BST	WS	CWD

FIGURE A-14

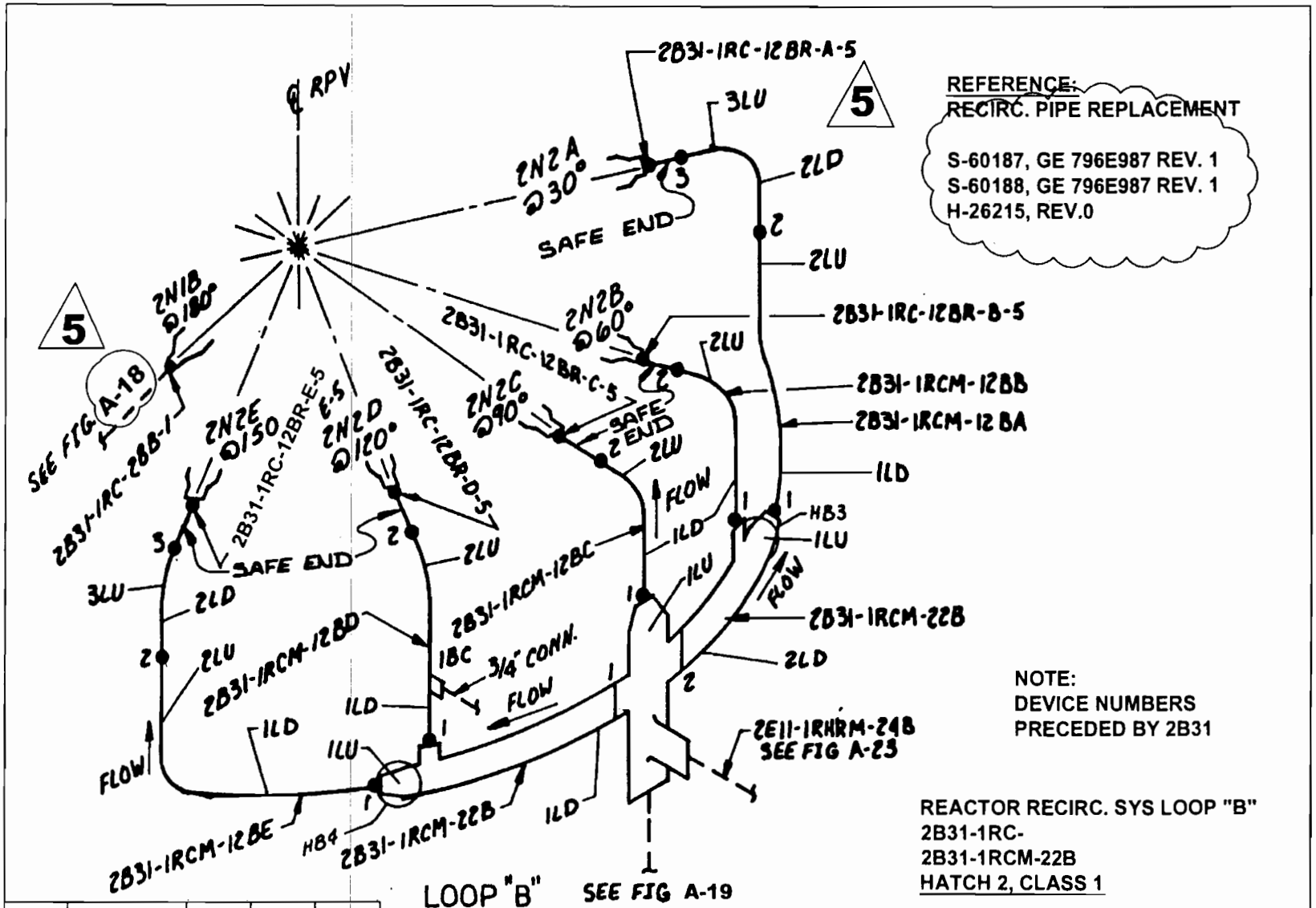

REFERENCE:
RECIRC. PIPE REPLACEMENT

S-60187, GE 796E987 REV. 1
S-60188, GE 796E987 REV. 1
H-26215, REV.0

NOTE:
DEVICE NUMBERS
PRECEDED BY 2B31

REACTOR RECIRC. SYS LOOP "B"
2B31-1RC-
2B31-1RCM-22B
HATCH 2, CLASS 1

LOCATION: DRYWELL

FIGURE A-15

5	10-29-04	TAS	MB	DAS
Rev.	Date	By	CHK'D	APP.1

PUMP "A" SUCTION
2B31-IRCM-28-AS
2B31-IRC-28A
HATCH 2, CLASS I

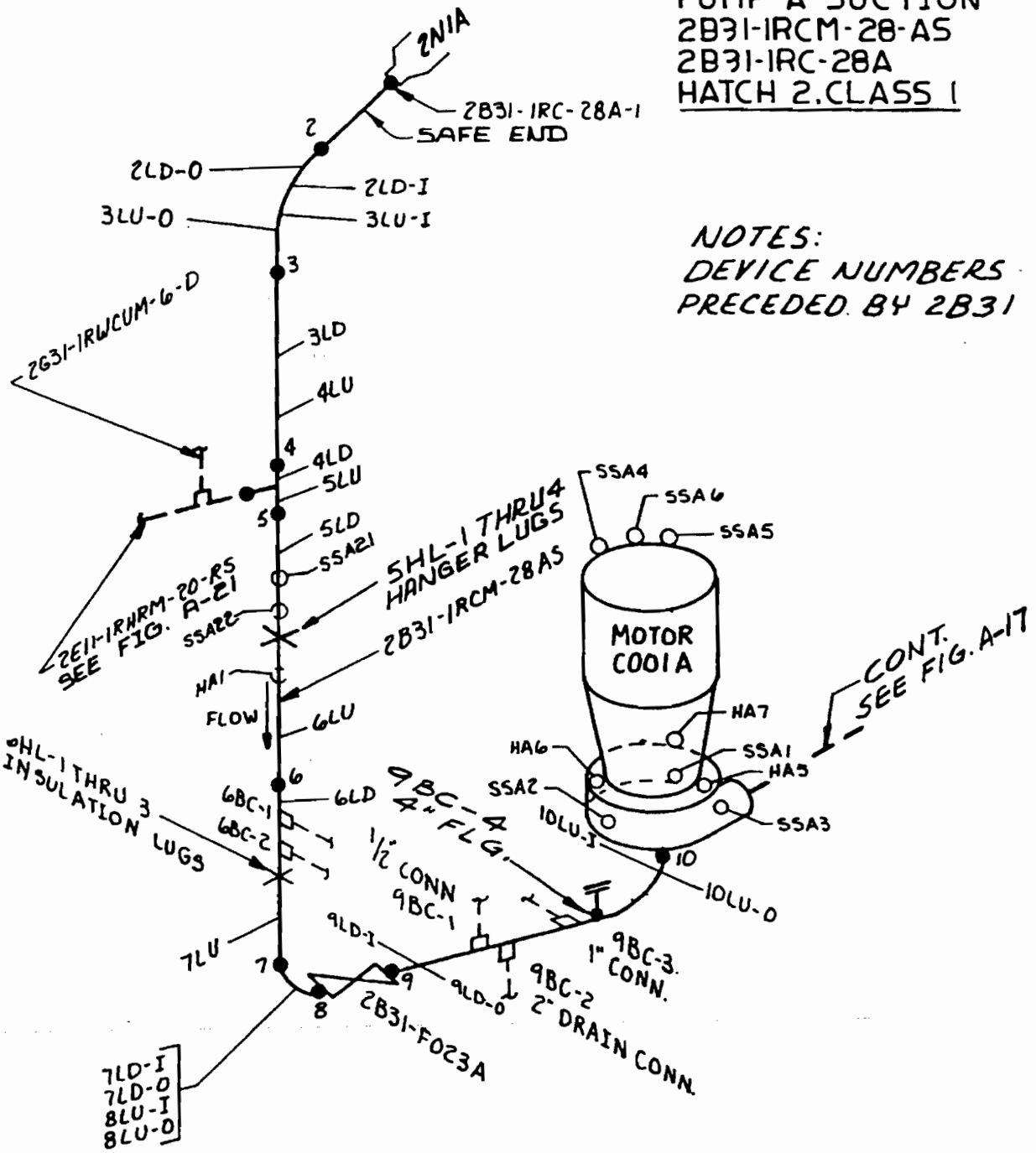

NOTES:
DEVICE NUMBERS PRECEDED BY 2B31

LOOP "A"

REFERENCES:

RECIRC. PIPE REPLACEMENT
S-60187, GE 796E987, REV. 0
S-60188, GE 796E987, REV. 0
S-61433, REV. A
S-61434, REV. A

FIGURE A-16

REV.	DATE	BY	CHK'D	APPR. 1
8	8-27-04	JEA	[illegible]	DDS
7	12-3-99	RPW	BKJ	DRG
[illegible]	7/28/96	WS	REW	WHC
5	6-10-91	WGS	WS	WHC
4	11-30-90	WGS	WS	WHC

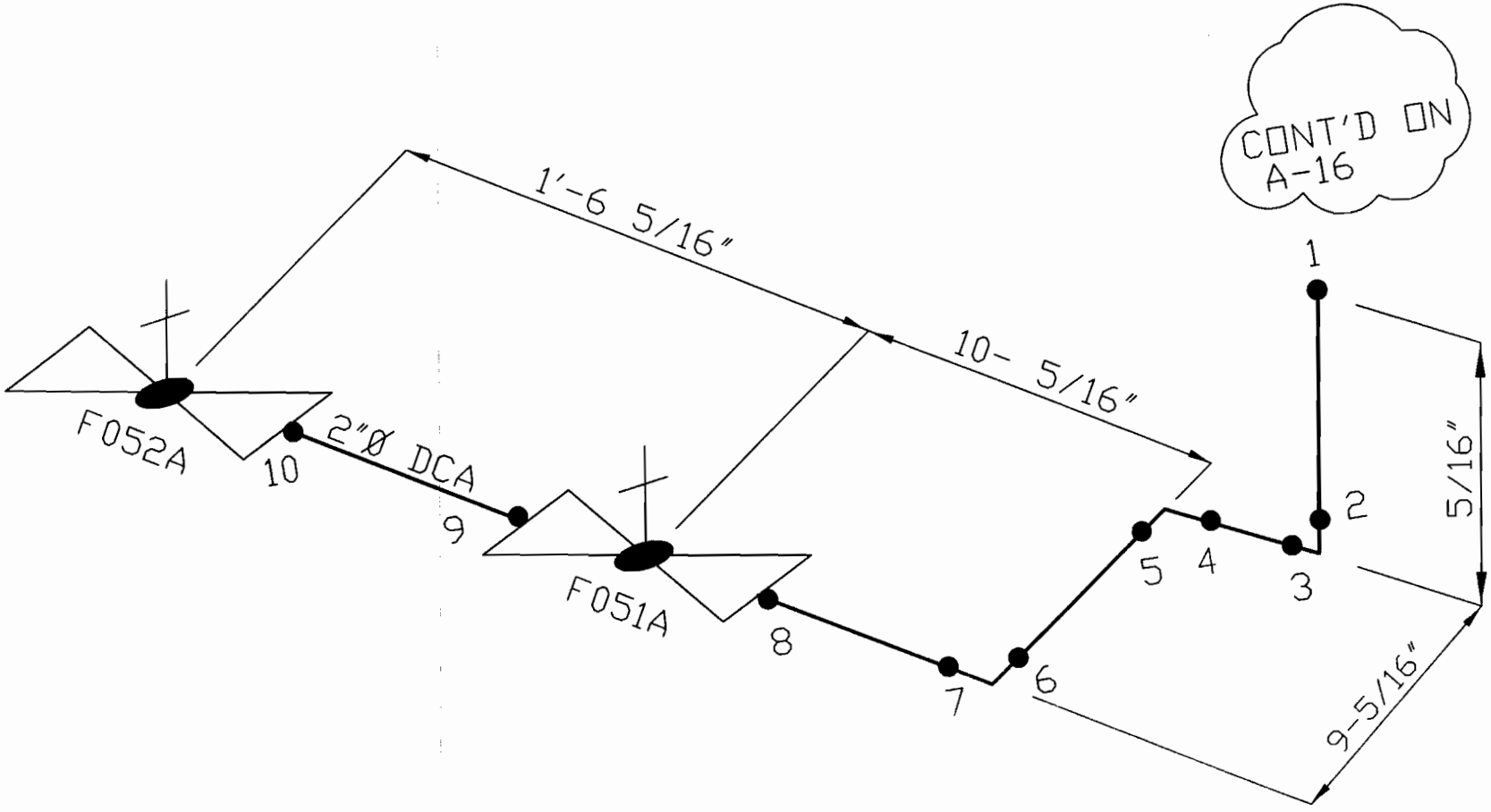

NOTES:

1. REF. ISO. S-30804
2. ALL WELDS ARE SOCKET WELDS.

LOOP A DRAIN LINE
2B31-1RC-2A
LOCATION: DRYWELL

FIGURE A-16A

1	6-09-06	RAM	SMM	MB
Rev.	Date	By	CHK'D	APP.1

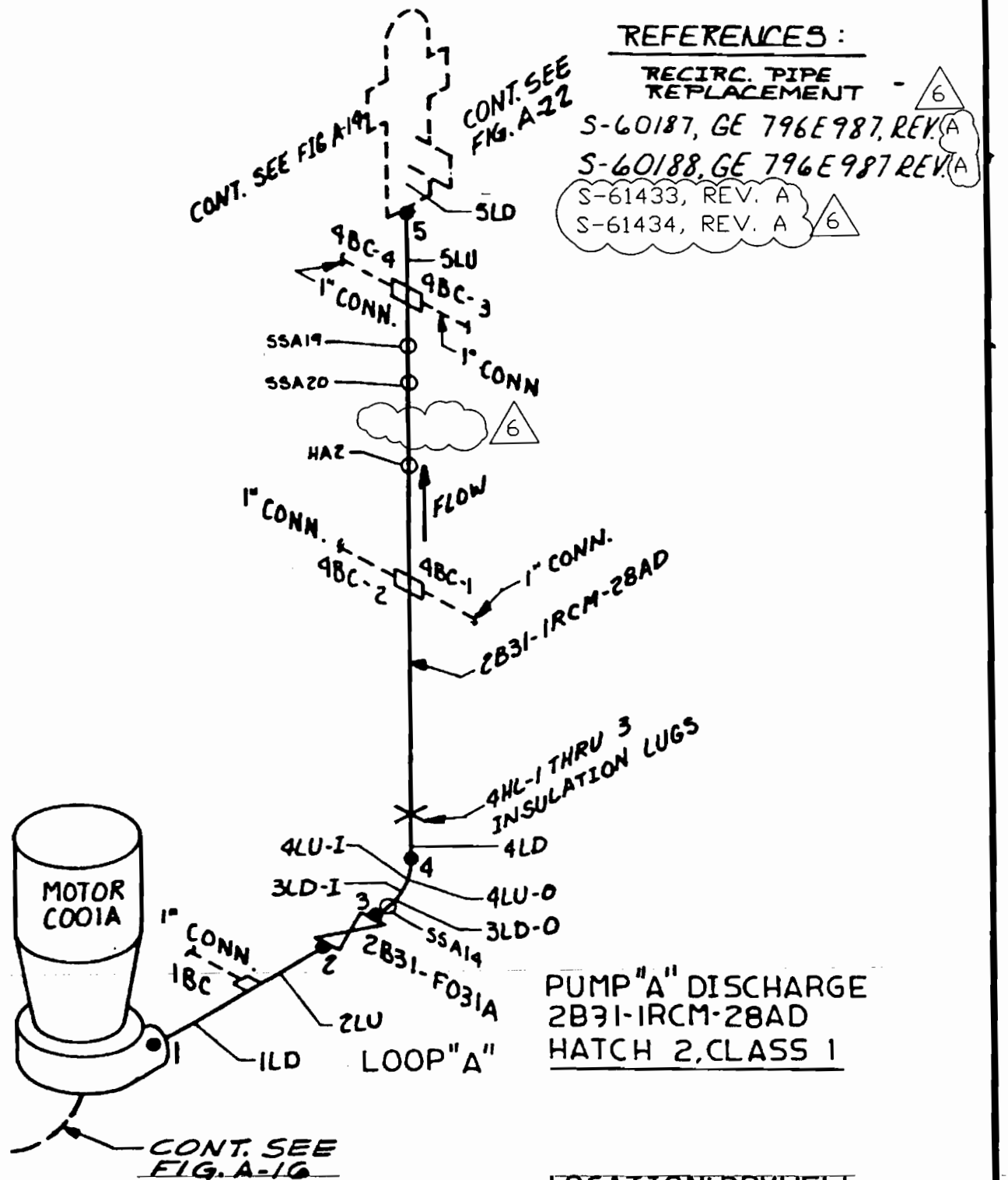

REV.	DATE	BY	CHK'D	APPR. 1
6	10-14-04	TAS	[illegible]	DDS
	12-3-99	RPW	BKJ	DRG
3	11-30-90	WGS	WS	WHC
2	4-13-87	DST	BKG	CJD
4	6-10-91	WGS	WS	WHC

FIGURE A-17

PUMP "B" SUCTION
2B31-IRC-28-B
2B31-IRCM-28BS
HATCH 2, CLASS I

LOCATION: DRYWELL

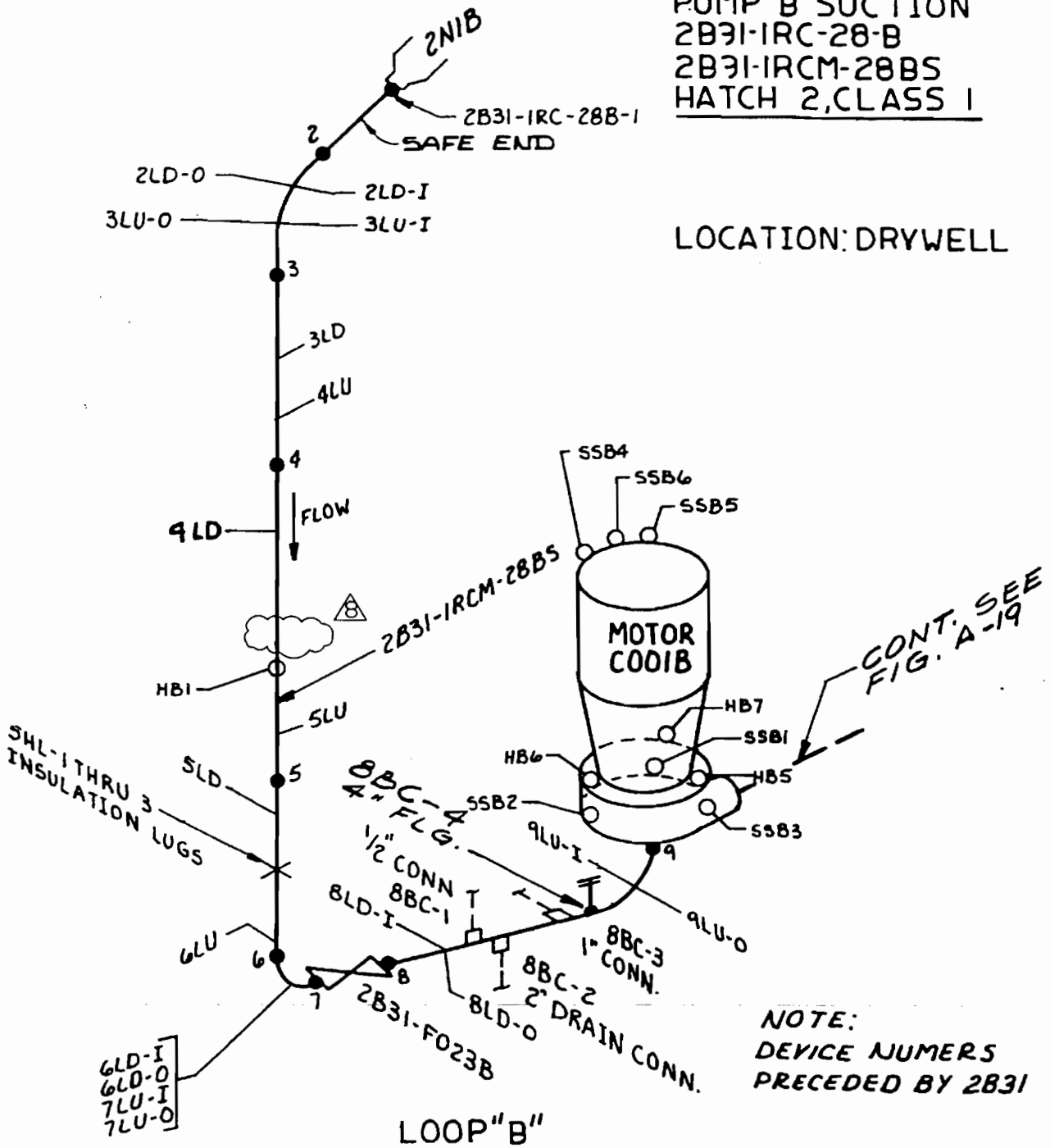

NOTE:
DEVICE NUMERS
PRECEDED BY 2B31

LOOP "B"

REFERENCES:

RECIRC. PIPE
REPLACEMENT
S-60187, GE 796E987, REV. A
S-60188, GE 796E987, REV. A
S-61433, REV. A
S-61434, REV. A

REV.	DATE	BY	CHK'D	APPR. 1
8	10-14-04	TAS		DDS
	12-3-99	RPW	BKS	DRG
6	7-28-96	NS	RFW	WHC
5	6-10-91	WGS	WS	WHC
4	11-30-90	WGS	WS	WHC

FIGURE A-18

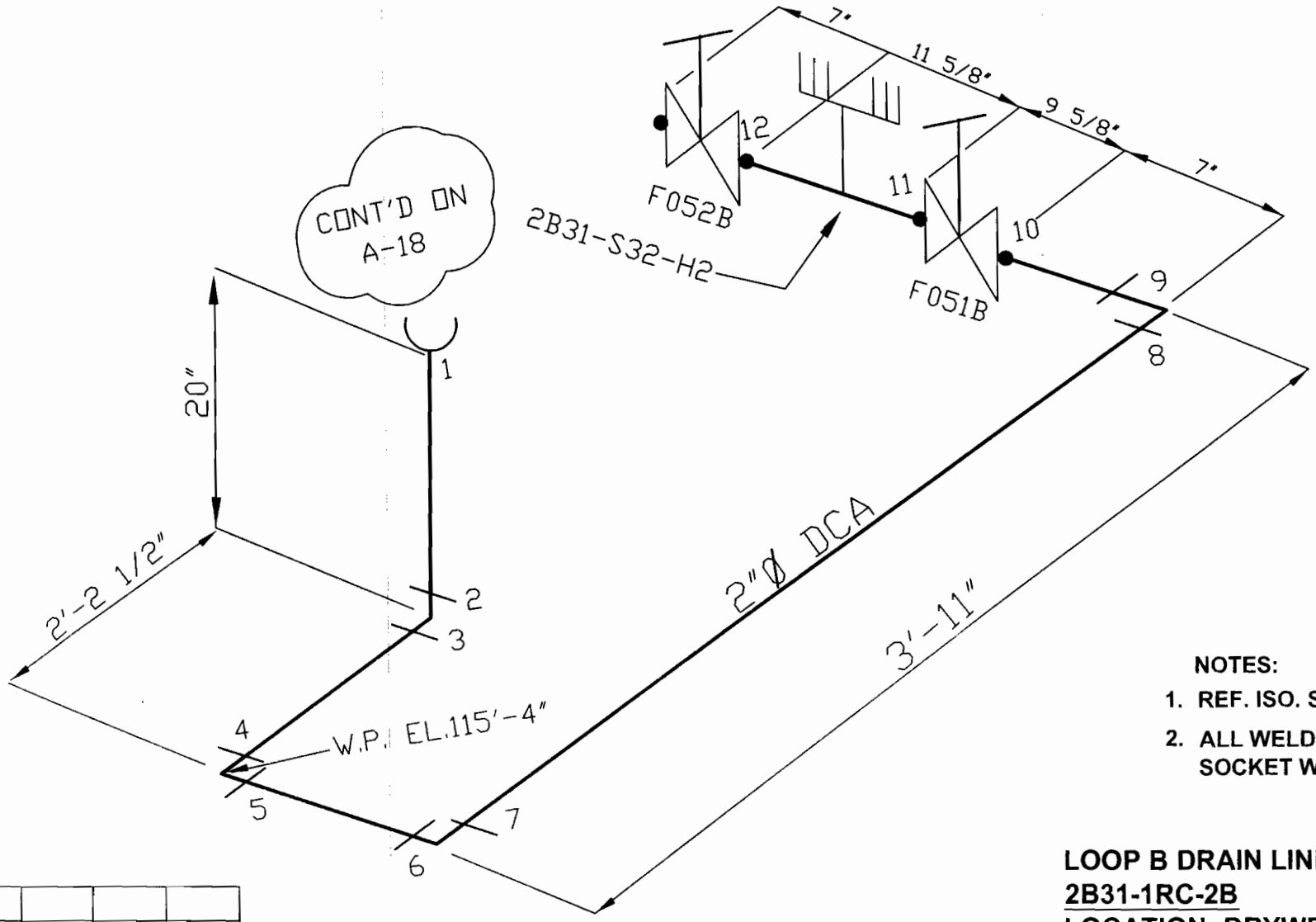

NOTES:

1. REF. ISO. S-30809
2. ALL WELDS ARE SOCKET WELDS.

LOOP B DRAIN LINE
2B31-1RC-2B
LOCATION: DRYWELL

FIGURE A-18A

1	6-09-06	RAM	SMM	MB
Rev.	Date	By	CHK'D	APP.1

REFERENCES:

RECIRC. PIPE REPLACEMENT
S-60187, GE 796E987, REV. A
S-60188, GE 796E987, REV. A
S-61433, REV. A

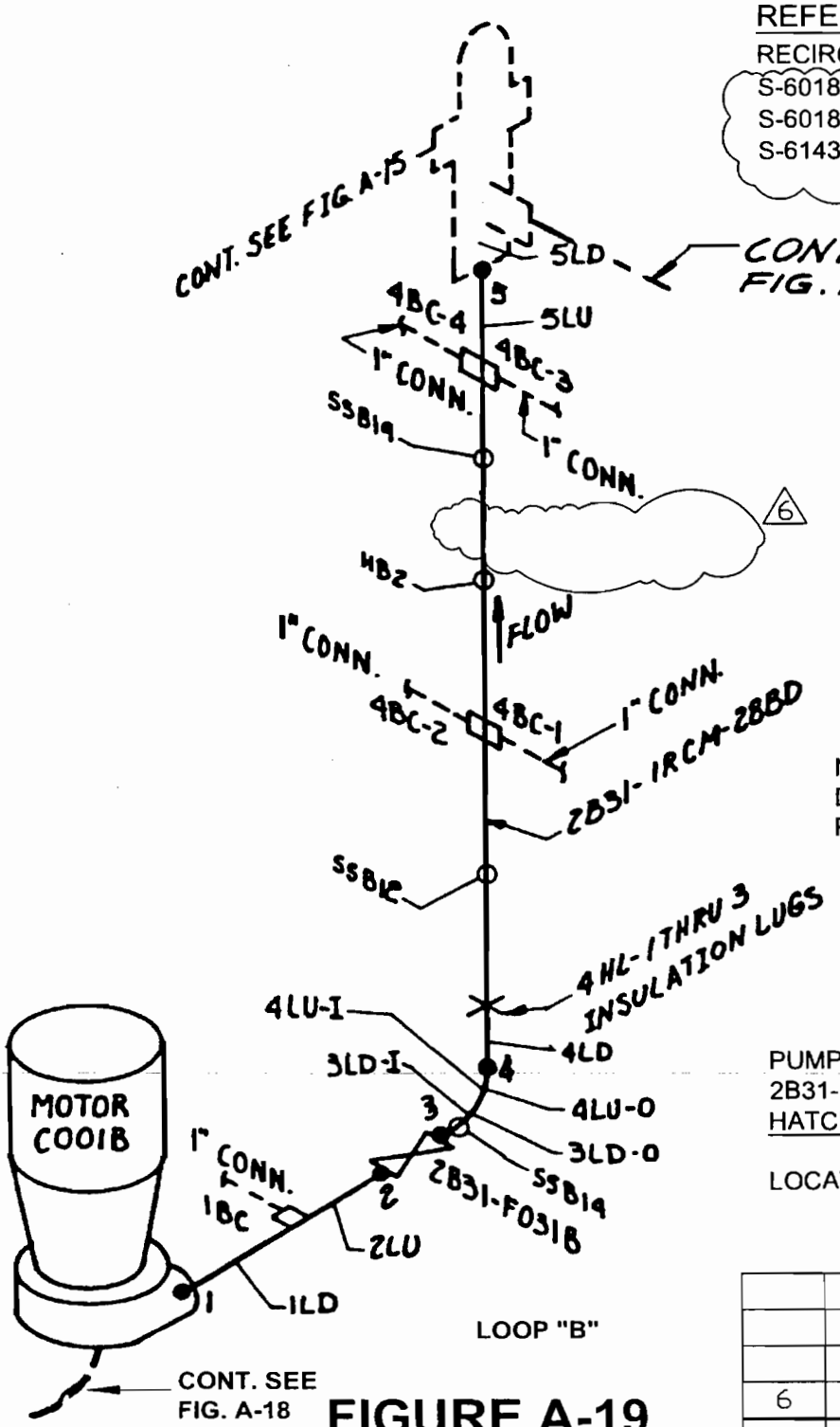

NOTE:
DEVICE NUMBERS PRECEDED BY 2B31

PUMP "B" DISCHARGE
2B31-1RCM-28BD
HATCH 2 - CLASS 2

LOCATION: DRYWELL

6	9-7-04	TAS		
Rev.	Date	By	CHK'D	APP.1

FIGURE A-19

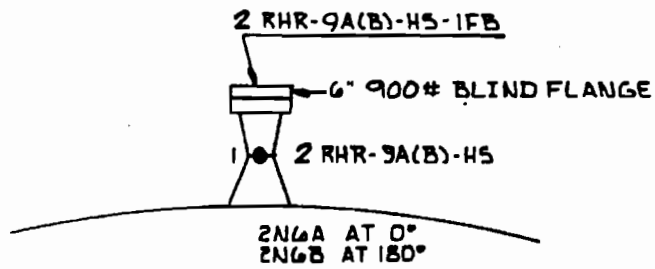

HEAD SPRAY
2E11-1RHR-4-HS

2E11-1RHR-9A-HS
2E11-1RHR-9B-HS
RESIDUAL HEAT REMOVAL SYS. CLASS 1

LOCATION: DRYWELL & REFUELING FL.
NOTE: ALL DEVICE NUMBERS
PRECEDED BY 2E11

REFERENCES:
RPV HEAD SPRAY
2E11-108, (H-26826), REV.0

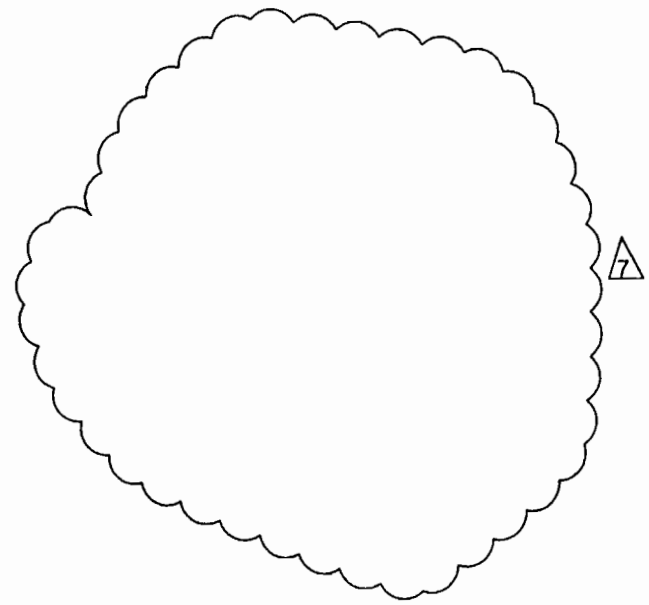

REV.	DATE	BY	CHK'D	APPR.1
7	9-8-04	TAS	[illegible]	ODS
6	6/25/96	WS	KFW	WHC
5	4/24/95	WS	KFW	WHC
4	6-10-91	WGS	WS	WHC

FIGURE A-20

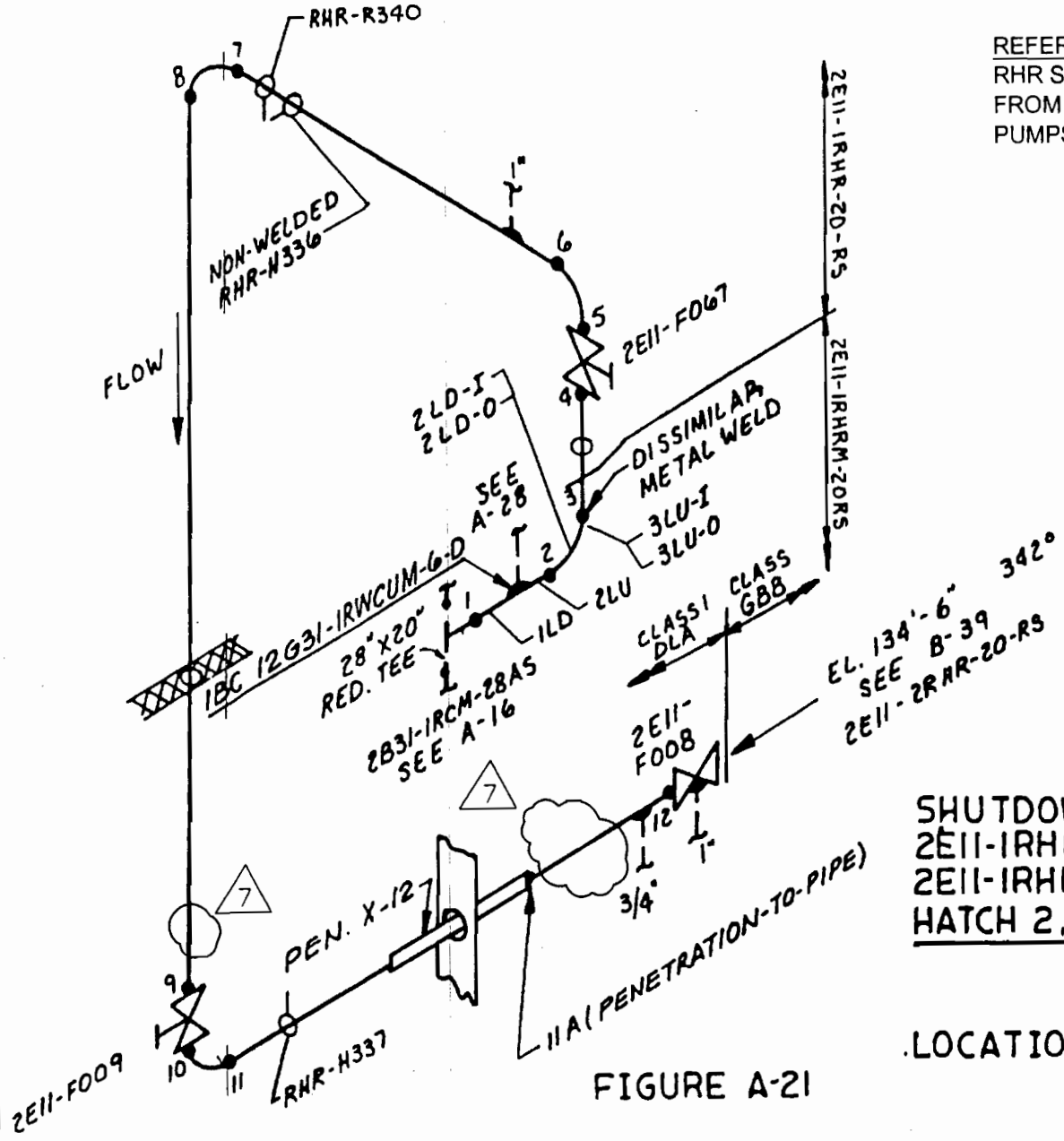

REFERENCES:
RHR SYS. SUCTION PIPING
FROM RECIRC. HEADER TO
PUMPS A,B,C,& D_ _ _ _ H-26819 REV. 3
REF. C-10

REV.	DATE	BY	CHK'D	APPR 1
7	9-07-04	TAS		
6	6-24-99	RPW	BKS	DRC
3	5-19-97	BKG	CSB	
2	3-23-87		WS	MB
5	11-30-90	WGS	WS	WHC

SHUTDOWN COOLING SYSTEM
2E11-1RHR-20-RS
2E11-1RHRM-20RS
HATCH 2, CLASS 1

LOCATION: DRYWELL AND EAST PENETRATION ROOM

FIGURE A-21

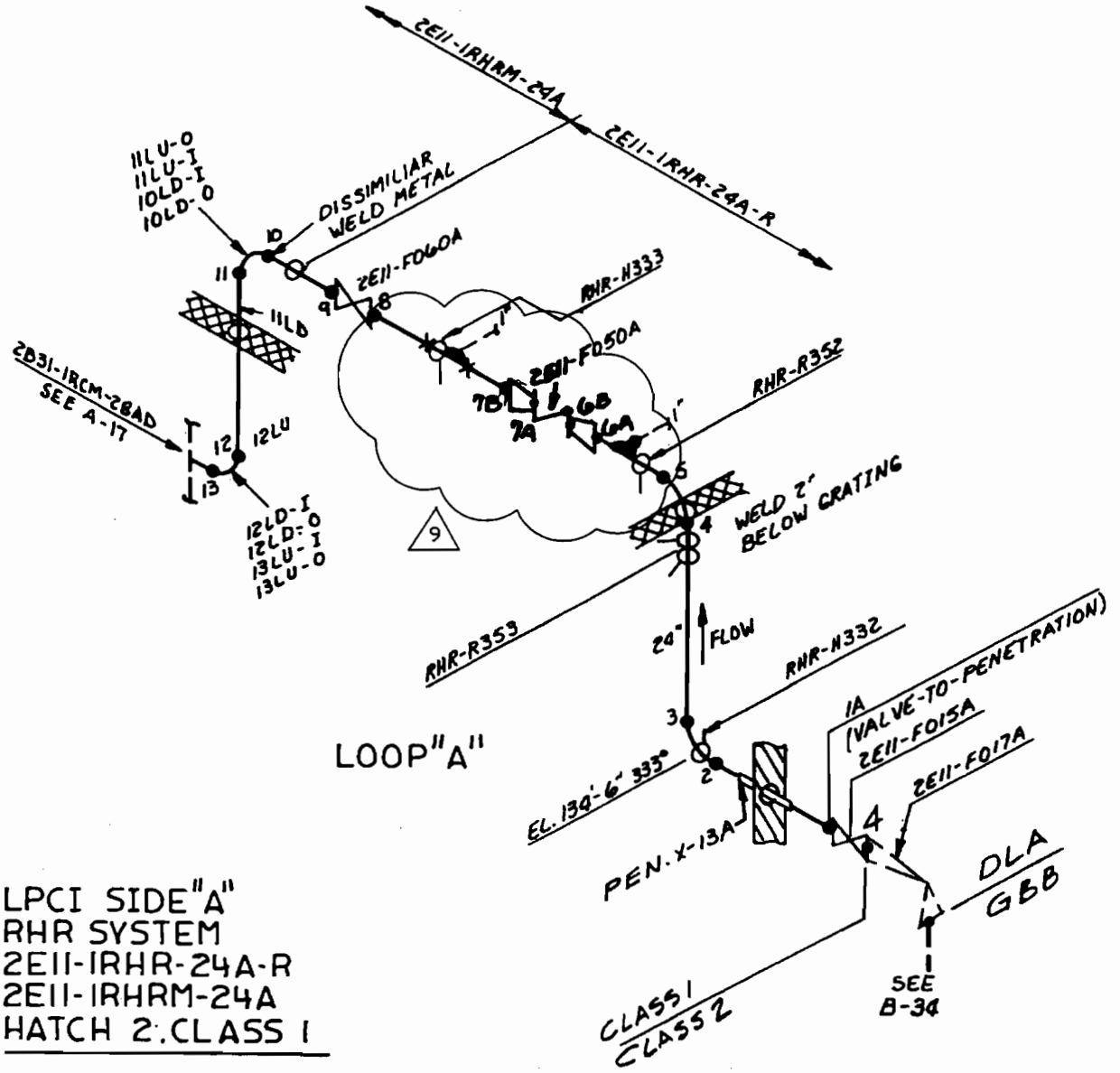

LPCI SIDE "A"
RHR SYSTEM
2E11-1RHR-24A-R
2E11-1RHRM-24A
HATCH 2: CLASS 1

LOCATION: DRYWELL AND EAST PENETRATION ROOM

REFERENCES:
RHR SYS. DISCHARGE TO RECIRCULATION HEADER & TEST LINE TO TORUS - - - - - - - - H-26821 REV. 6

FIGURE A-22

9	8-30-06	SM	TKO	DDS
	10-14-04	TAS	KSJ	DDS
REV.	DATE	BY	CHK'D	APPR. 1

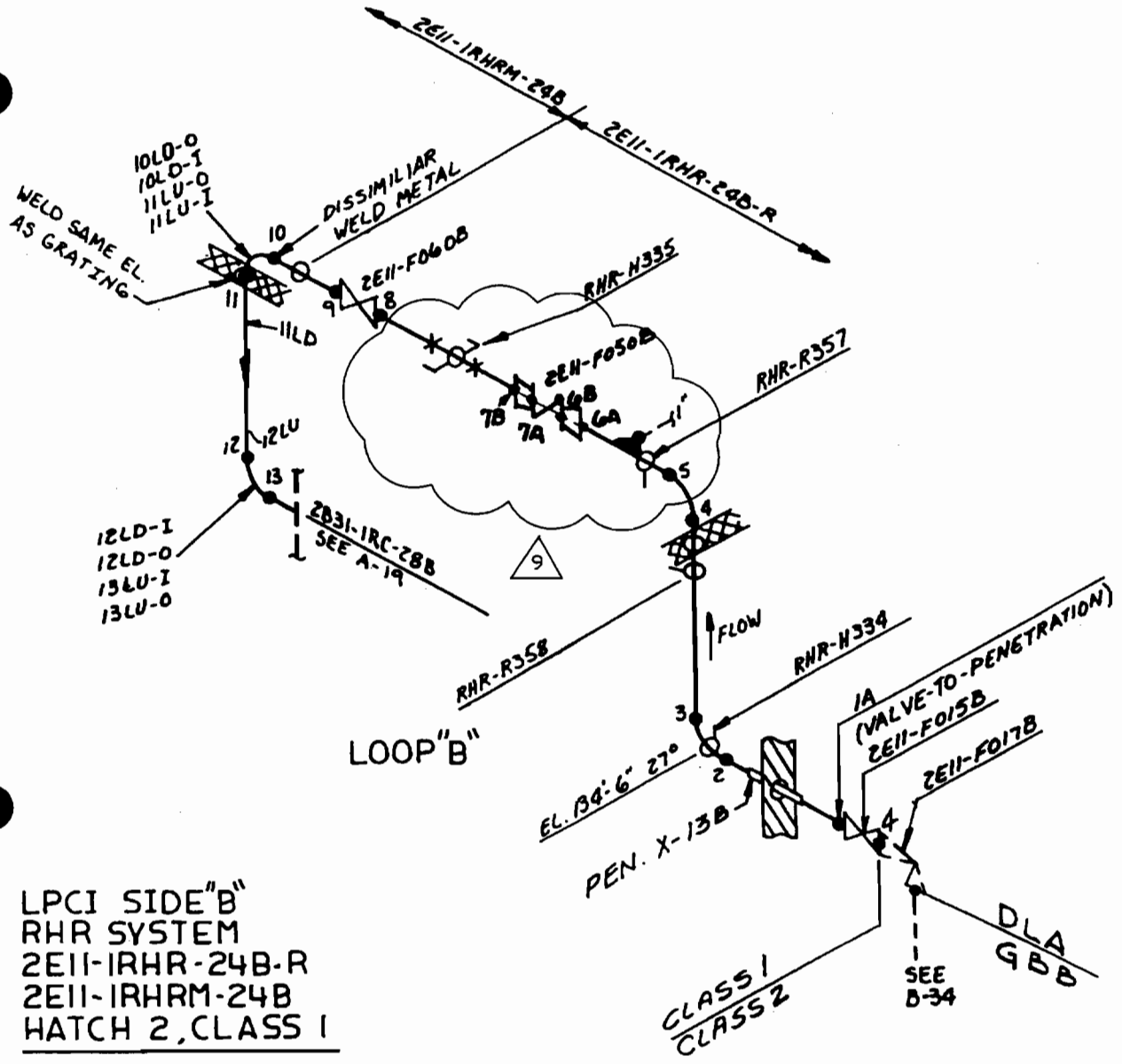

LPCI SIDE "B"
RHR SYSTEM
2E11-1RHR-24B-R
2E11-1RHRM-24B
HATCH 2, CLASS 1

LOCATION: DRYWELL AND EAST PENETRATION ROOM

REFERENCES:
RHR SYS. DISCHARGE TO RECIRC. HEADER & TEST LINE TO TORUS SIDE "B" - - - - - - - - - - - H-28000 REV.

FIGURE A-23

9	8-30-06	SM	KO	DDS
	10-14-04	TAS	KSJ	DDS
REV.	DATE	BY	CHK'D	APP.1

PUMP "A" DISCHAGE TO RV
2E21-1CS-10A
CORE SPRAY SYSTEM

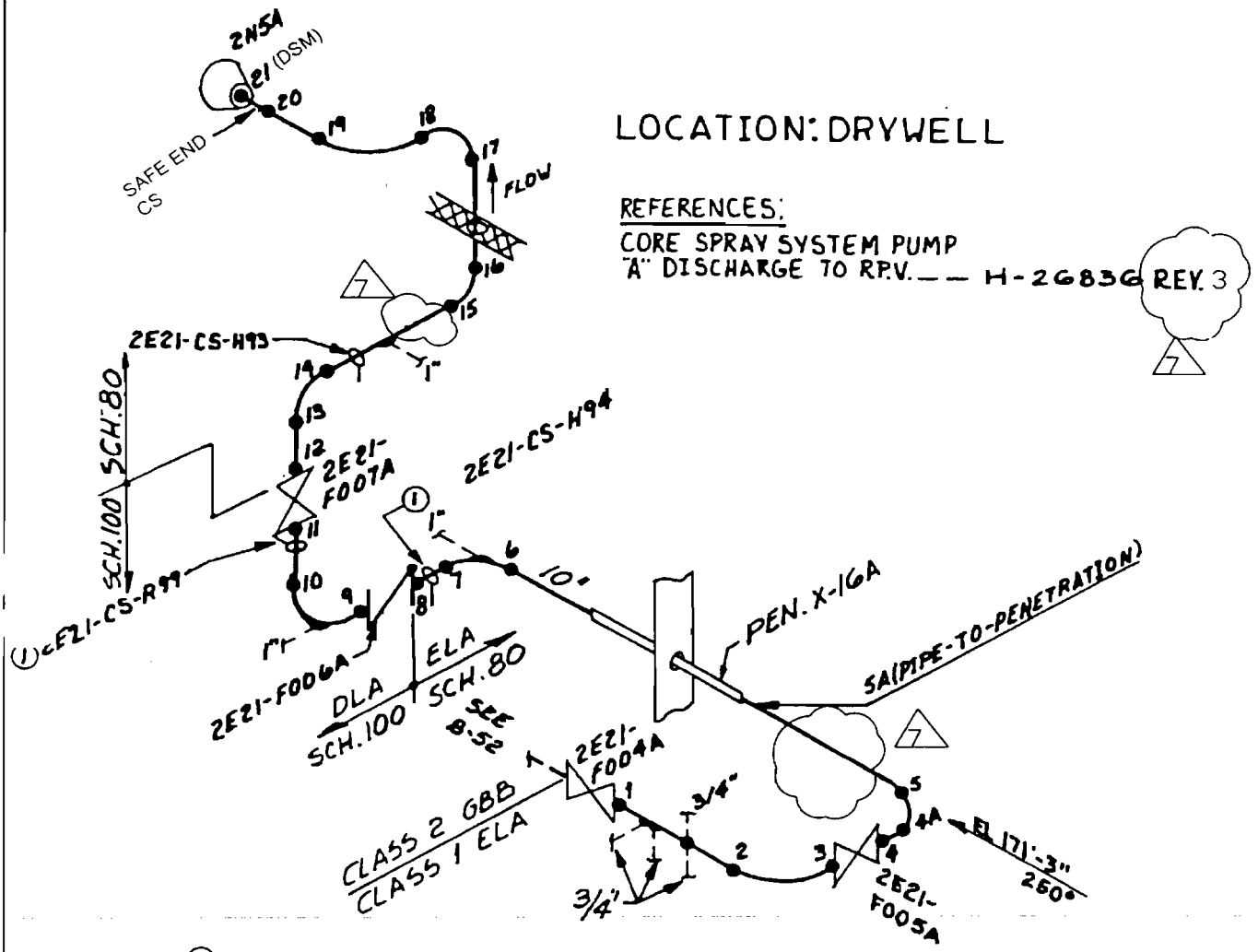

① RESTRAINT WILL LIMIT EXAMINATION OF WELD DOWNSTREAM AND UPSTREAM

REV.	DATE	BY	CHK'D	APPR. 1
	10-14-04	TAS		DAS

FIGURE A-24

(1) RESTRAINT WILL LIMIT EXAMINATION OF WELD DOWNSTREAM AND UPSTREAM.

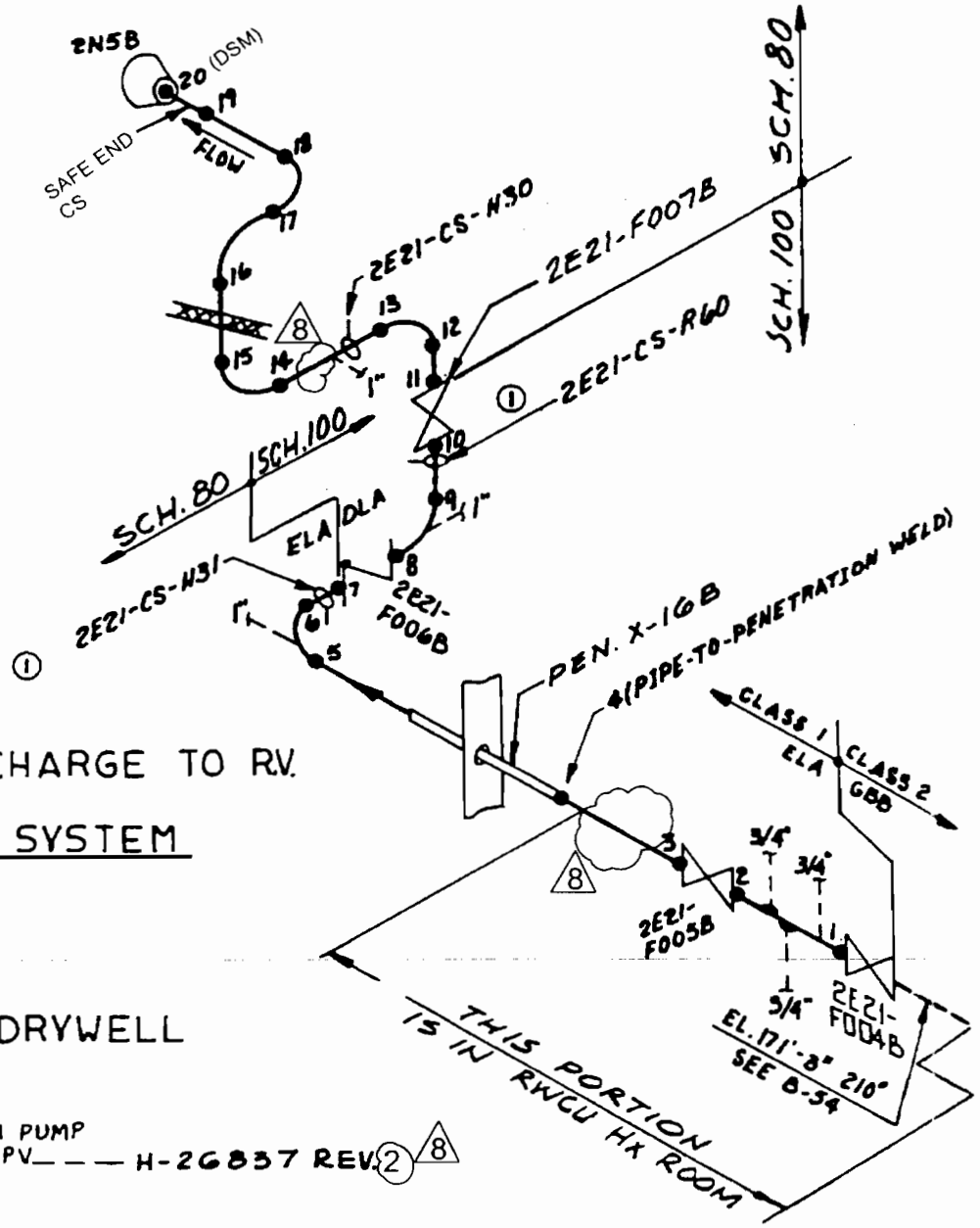

PUMP "B" DISCHARGE TO R.V.
2E21-ICS-10B
CORE SPRAY SYSTEM

LOCATION: DRYWELL

REFERENCES:
CORE SPRAY SYSTEM PUMP "B" DISCHARGE TO RPV — — — H-26837 REV. 2

3	10-14-04	TAS	RJF	DDS
REV.	DATE	BY	CHK'D	APPR. 1

FIGURE A-25

HPCI TURBINE STEAM SUPPLY
2E41-1HPCI-10-D
HIGH PRESSURE COOLANT
INJECTION SYSTEM

LOCATION: DRYWELL
NOTE: ALL DEVICE NUMBERS
PRECEDED BY 2E41

REFERENCES:

HPCI SYSTEM STEAM SUPPLY
TO TURBINE & RHR HEAT EXCHANGER --- H-26841
REV. 4

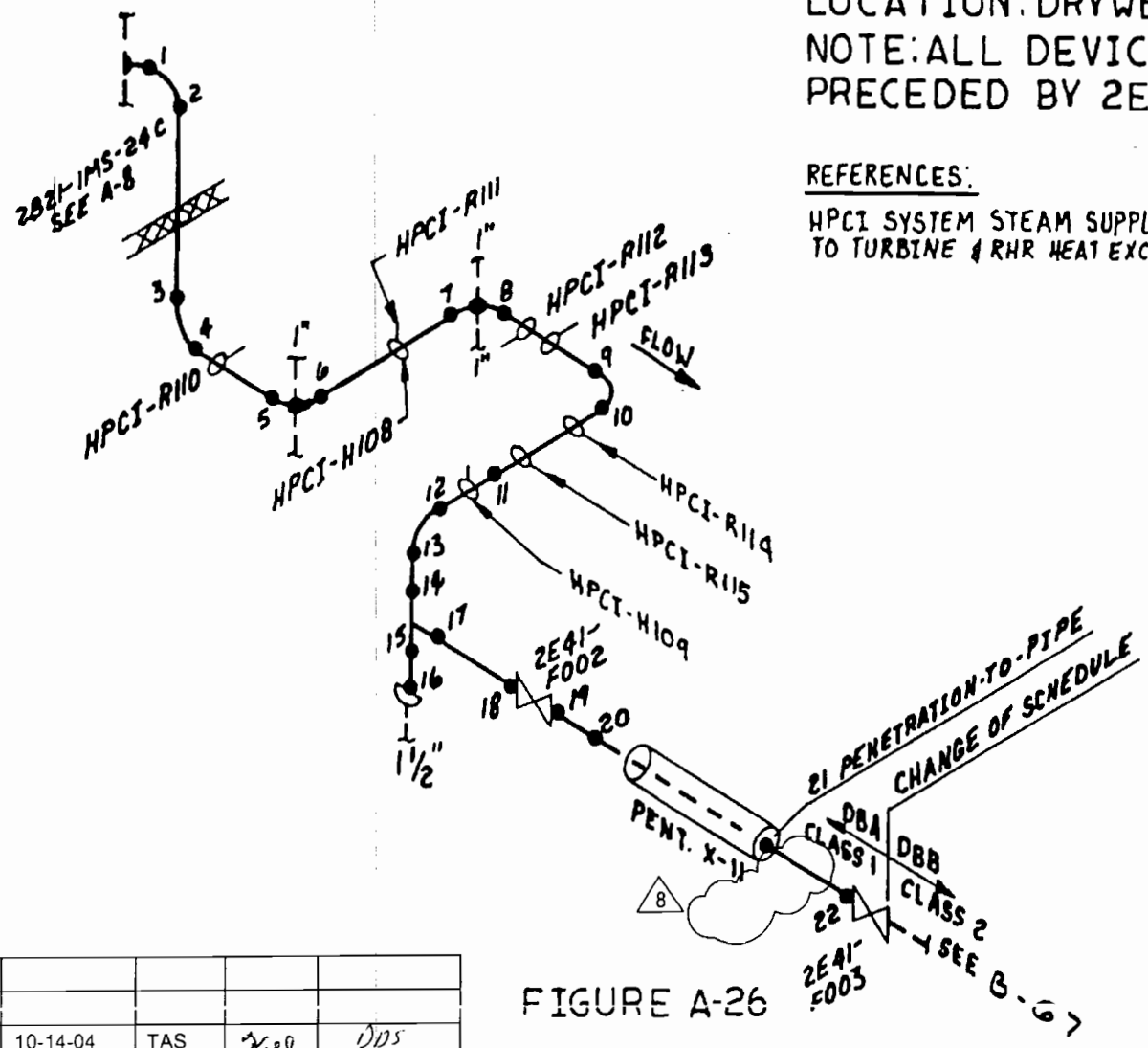

FIGURE A-26

8	10-14-04	TAS		DDS
REV.	DATE	BY	CHK'D	APPR. 1

RCIC TURBINE STEAM SUPPLY
2E51-1RCIC-4-D
REACTOR CORE ISOLATION
COOLING SYSTEM

LOCATION: DRYWELL
NOTE: ALL DEVICE NUMBERS
PRECEDED BY 2E51

REFERENCES:

RCIC SYSTEM STEAM
SUPPLY TO TURBINE — — H-26846 REV 7

9

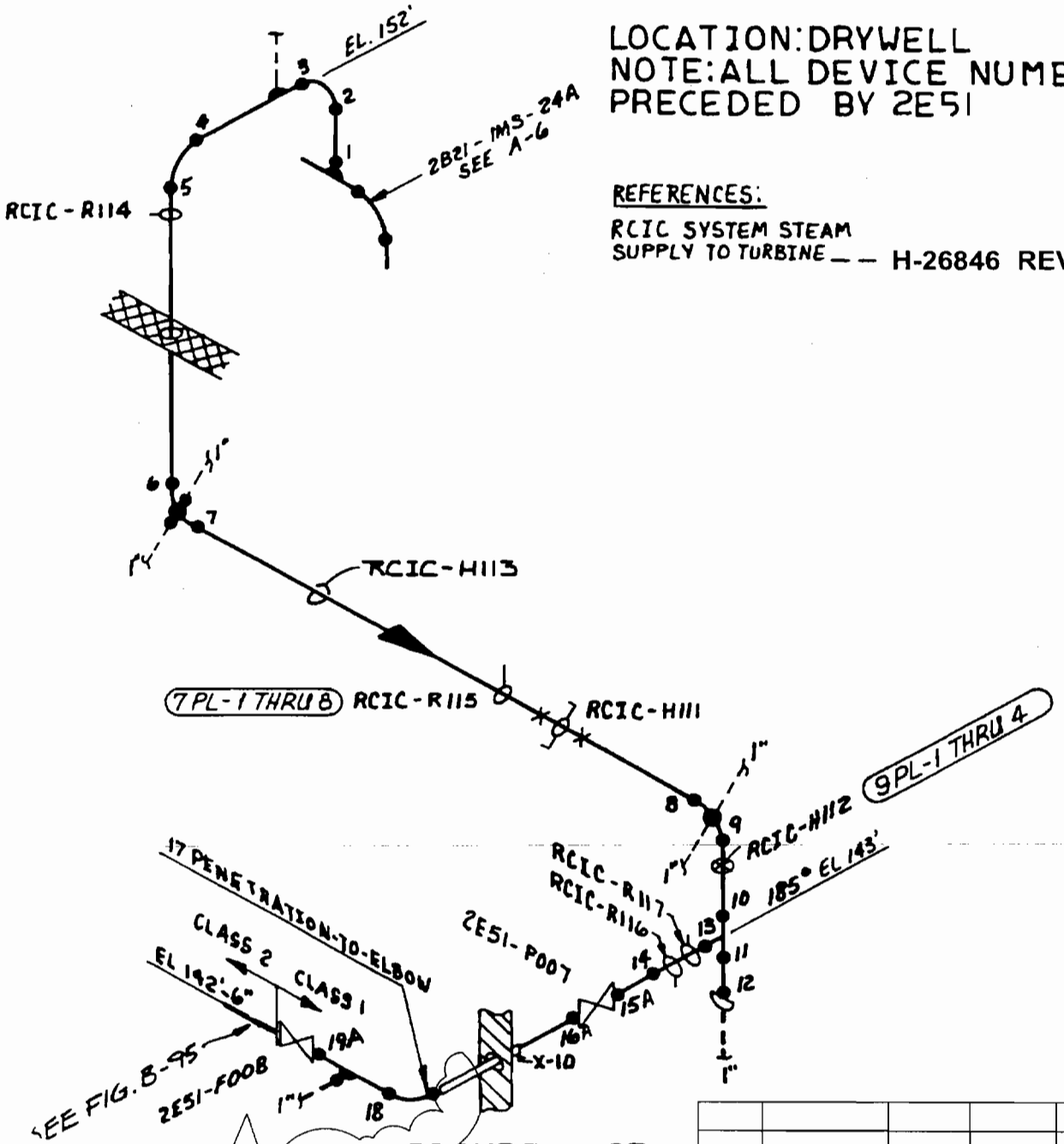

9

FIGURE A-27

9	10-14-04	TAS		
REV.	DATE	BY	CHK'D	APPR 1

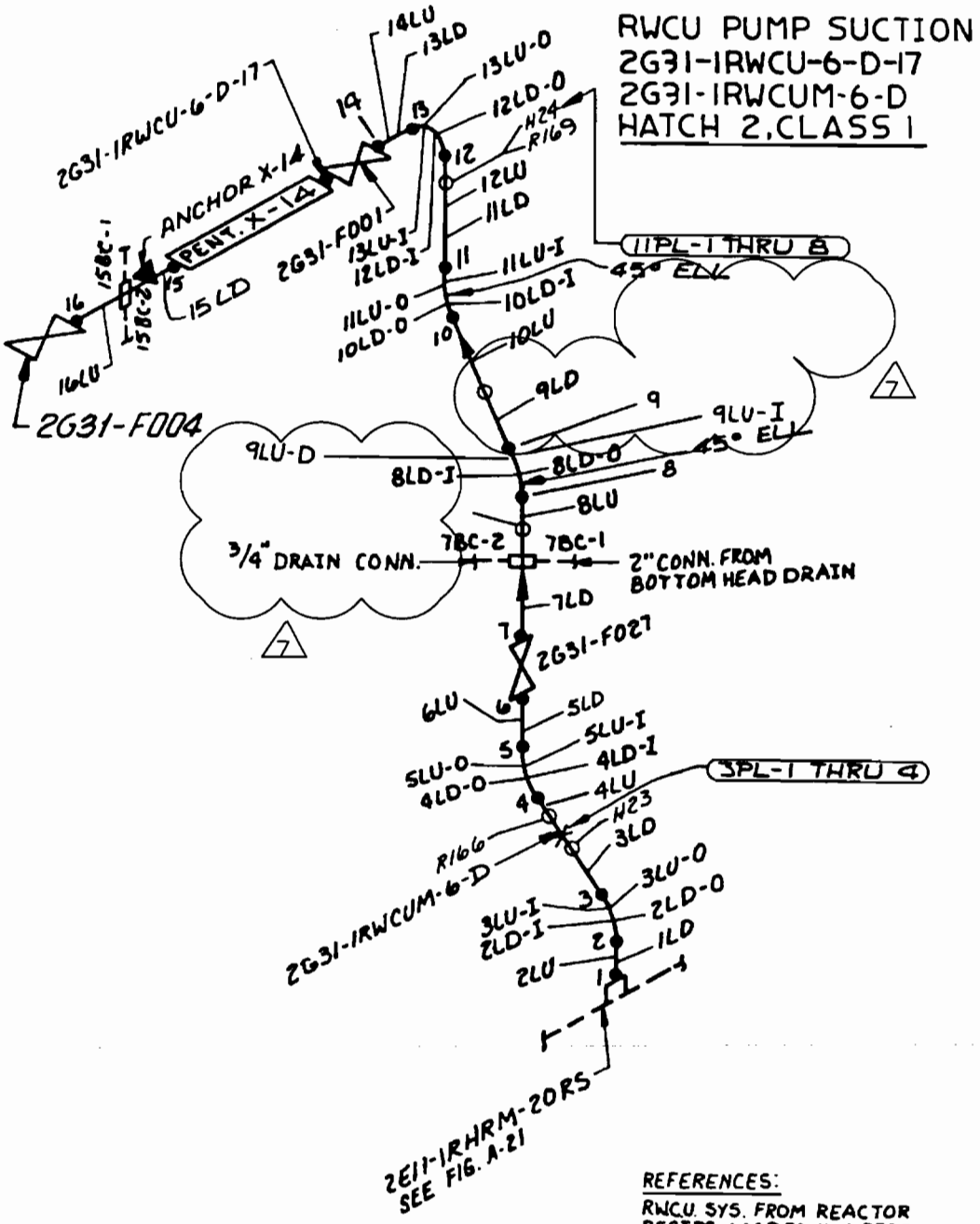

FIGURE A-28

7	8-30-06	SM	KO	DDS
6	6-24-99	RPW	BKJ	DRG
REV.	DATE	BY	CHK'D	APP.1

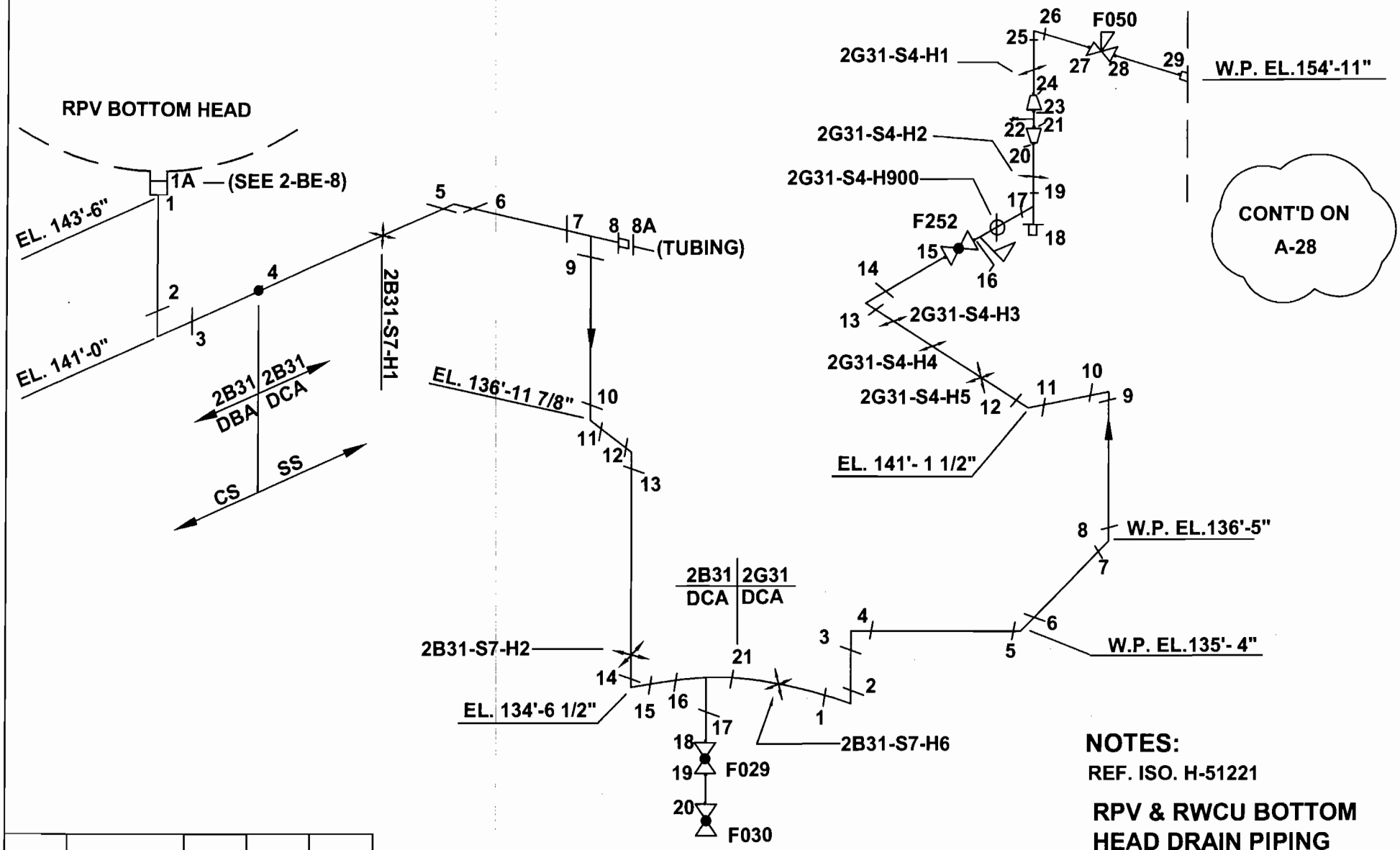

0	6-16-06	RAM	KO	DDS
Rev.	Date	By	CHK'D	APP.1

FIGURE A-28A

NOTES:

REF. ISO. H-51221

RPV & RWCU BOTTOM HEAD DRAIN PIPING
2B31-1RC-2DR
2G31-1RWCU-2DR
LOCATION: DRYWELL

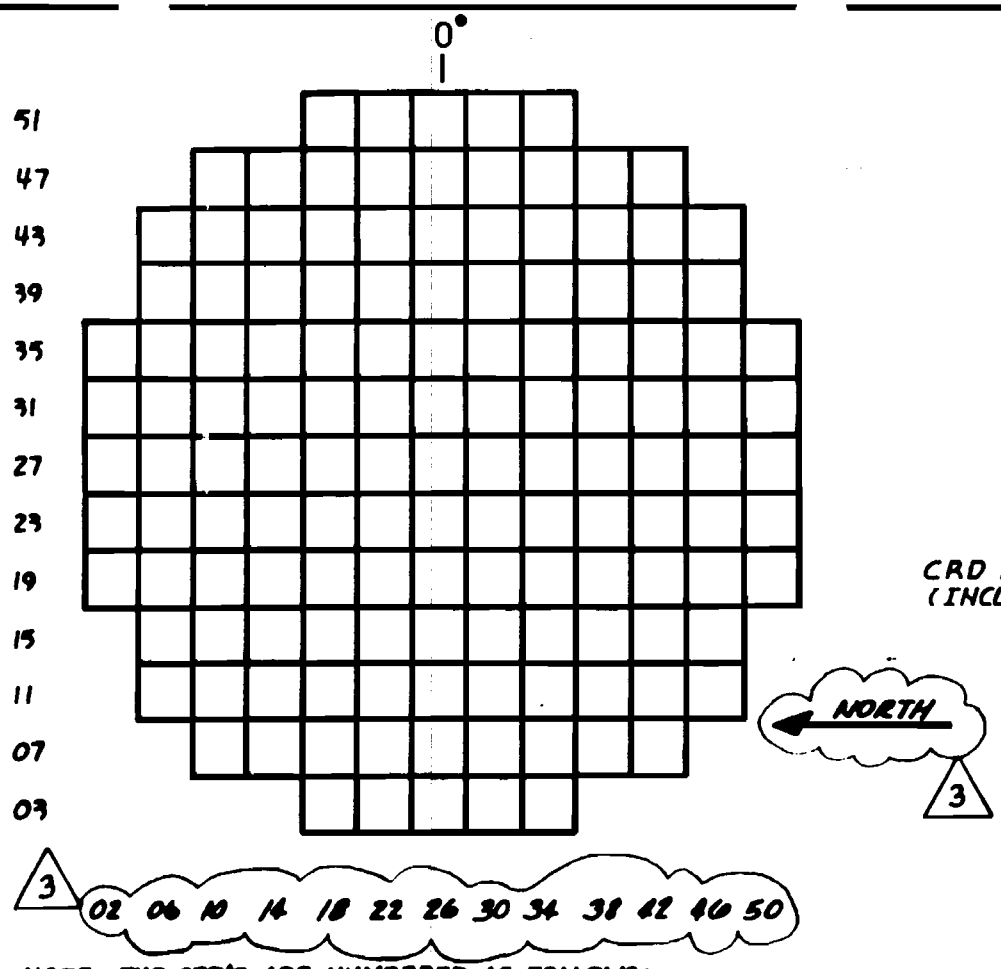

NOTE: THE CRD'S ARE NUMBERED AS FOLLOWS:
2-50-19, ETC. WITH THE EVEN NUMBERS LISTED FIRST.
(137 TOTAL)

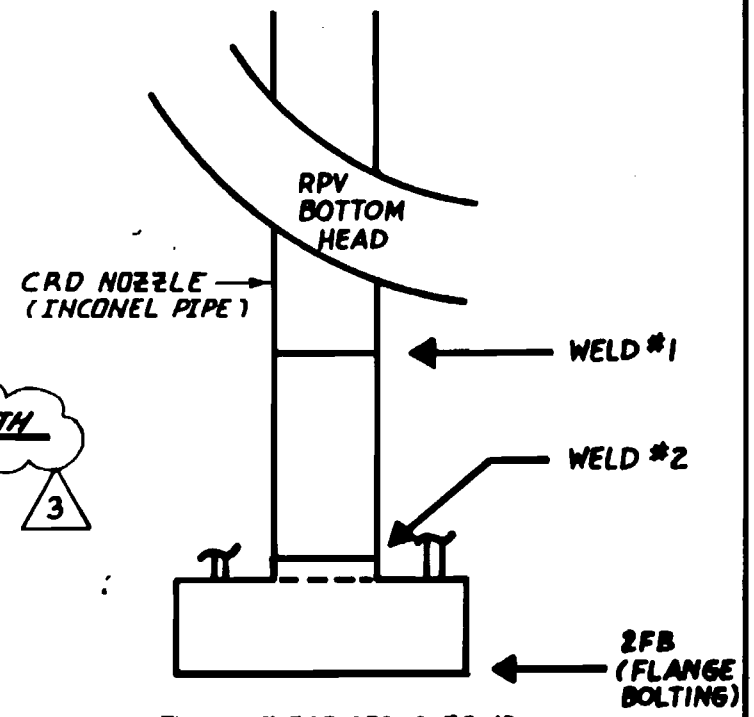

EXAMPLE FOR CRD 2-50-19:

2-50-19-1 PIPE TO PIPE WELD
2-50-19-2 PIPE TO FLANGE WELD
2-50-19-2FB FLANGE BOLTING

HATCH 2

FIGURE A-29

3	10-12-92	CAF	WS	WC
2	4-13-87	BST	BKW	CWD
1	2-17-87	BST	WS	CWD

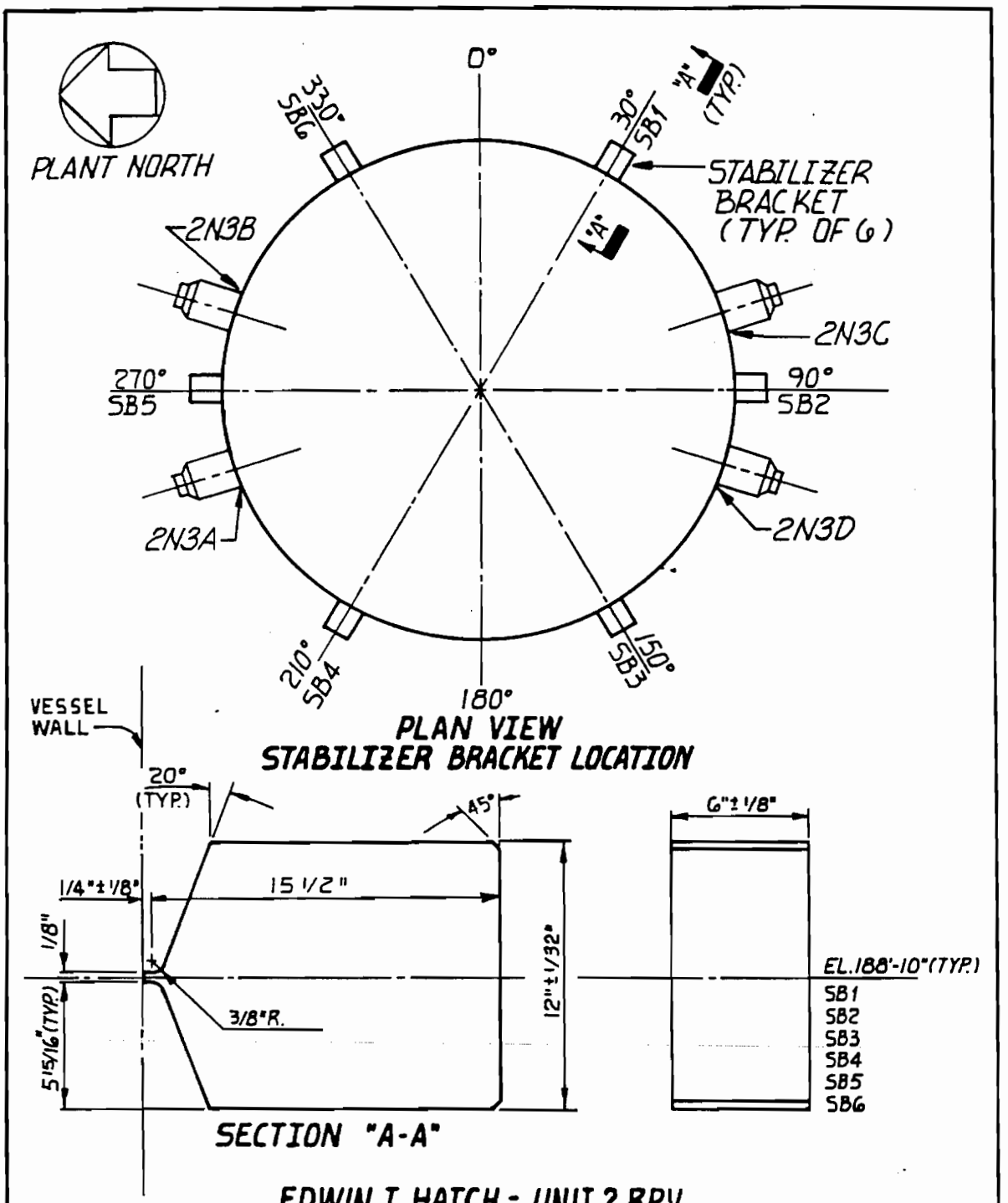

EDWIN I. HATCH - UNIT 2 RPV
STABILIZER BRACKET
FIGURE A-32

0	11-10-86	EJO	WS	MB
REV.	DATE	BY	CHK'D	APPR. 1

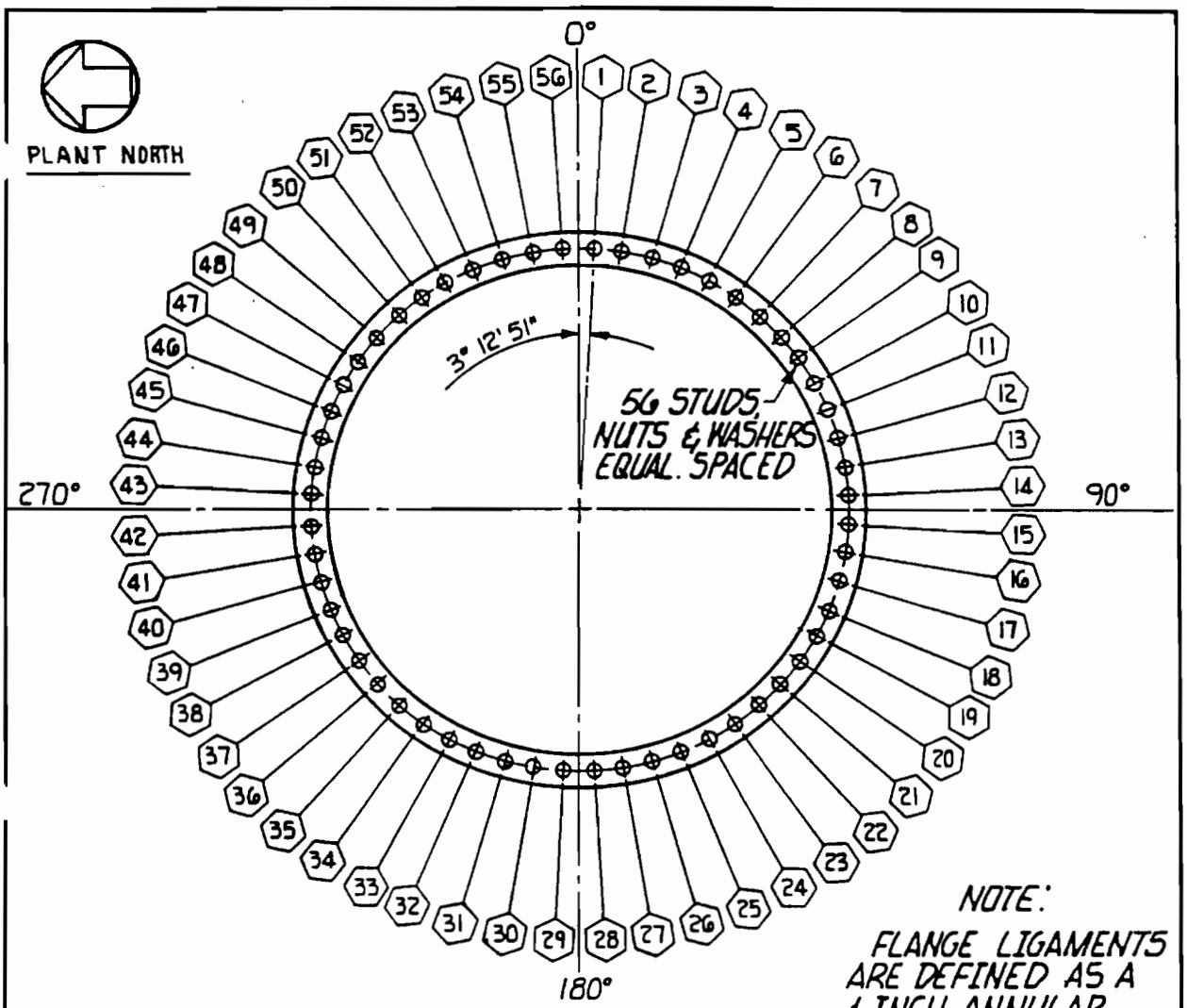

NOTE:

FLANGE LIGAMENTS ARE DEFINED AS A 1 INCH ANNULAR SURFACE OF FLANGE SURROUNDING EACH STUD. (TOTAL 56 LIGAMENTS)

EDWIN I. HATCH - UNIT 2 RPV
CLOSURE HEAD STUD IDENTIFICATION
FIGURE A-33

REV.	DATE	BY	CHK'D	APPR. 1
1	5-27-87	BST	CSB	CWD
0	11-8-86	E.J.O.	WS.	MB

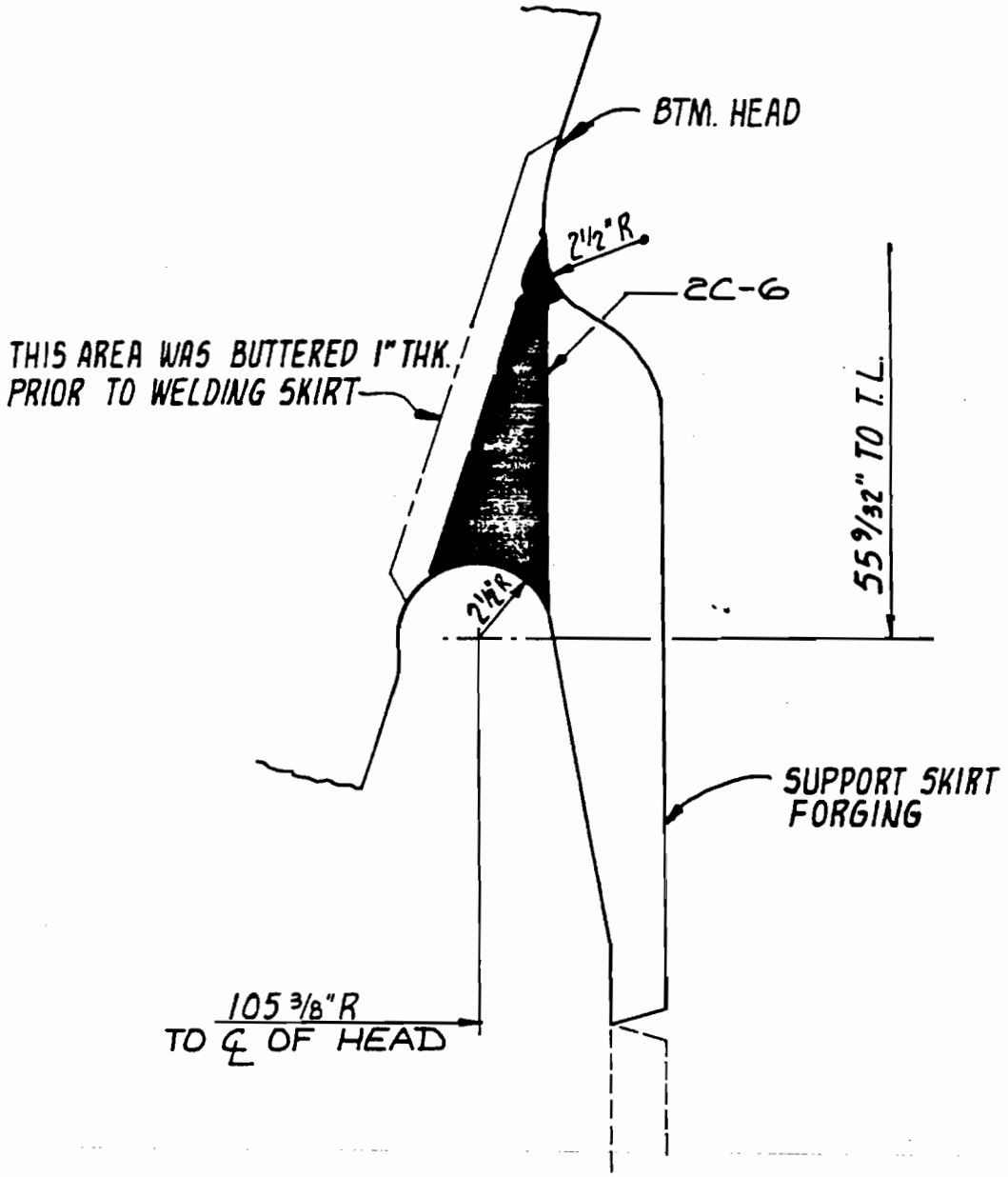

NOTES:

1. REF. C.E. DWG. 11570-851-001

EDWIN I. HATCH - UNIT 2 RPV
SUPPORT SKIRT ATTACHMENT
FIGURE A-34

0	11-10-86	MAC	WS	MB
REV.	DATE	BY	CHK'D	APPR. 1

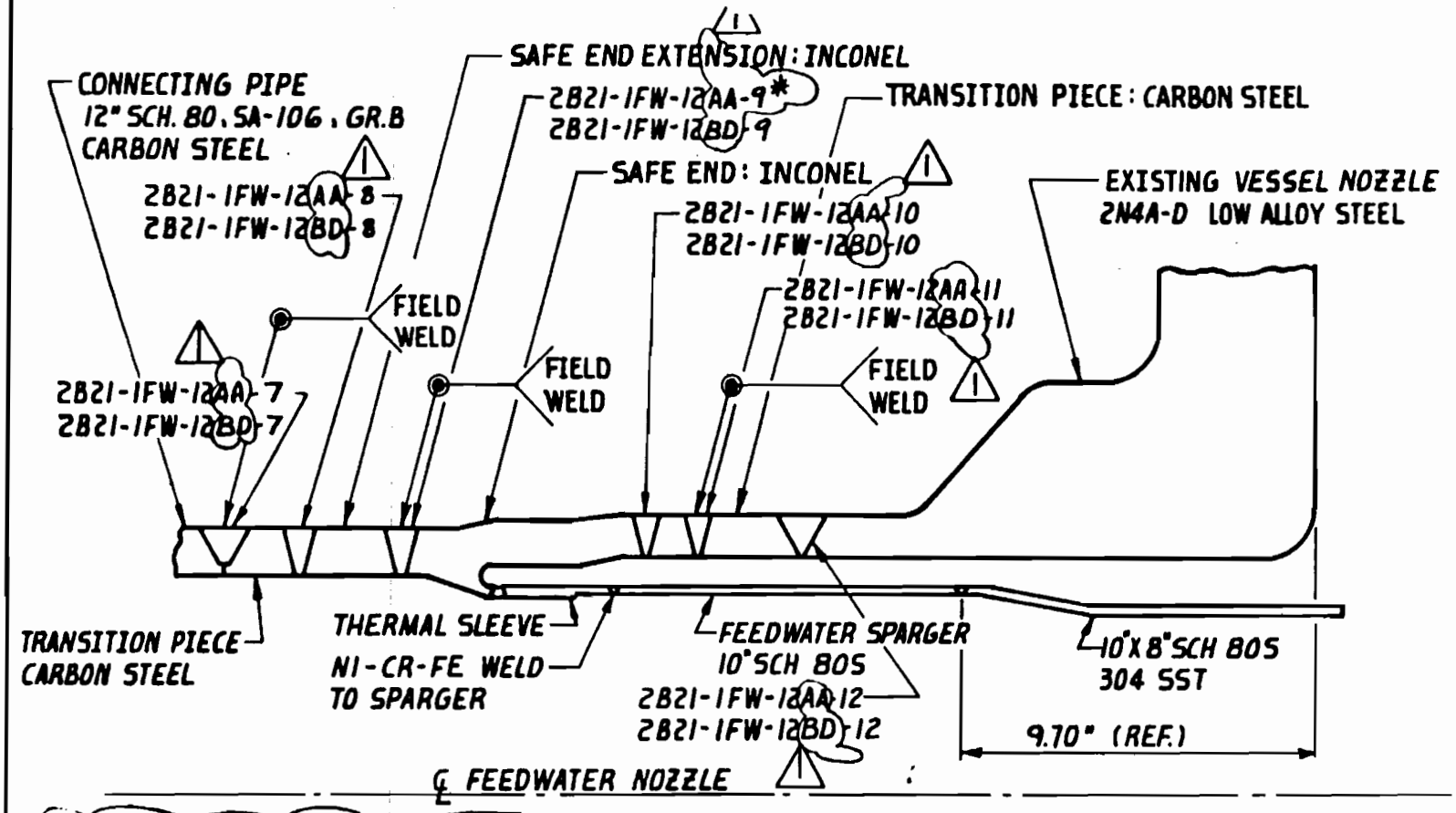

*INCLUDES WELD OVERLAY.

HATCH - UNIT 2

FEEDWATER NOZZLES 2N4A AND D, SAFE END AND SAFE END EXTENSION

NOTE: REFER TO CONSTRUCTION DATA PACKAGES FOR WELD METALS UTILIZED.

FIGURE A-35

REV.	DATE	BY	CHK'D	APPR 1
1	7-10-91	WGS	WG	WHC
0	3-9-87	EJO	WS	MB

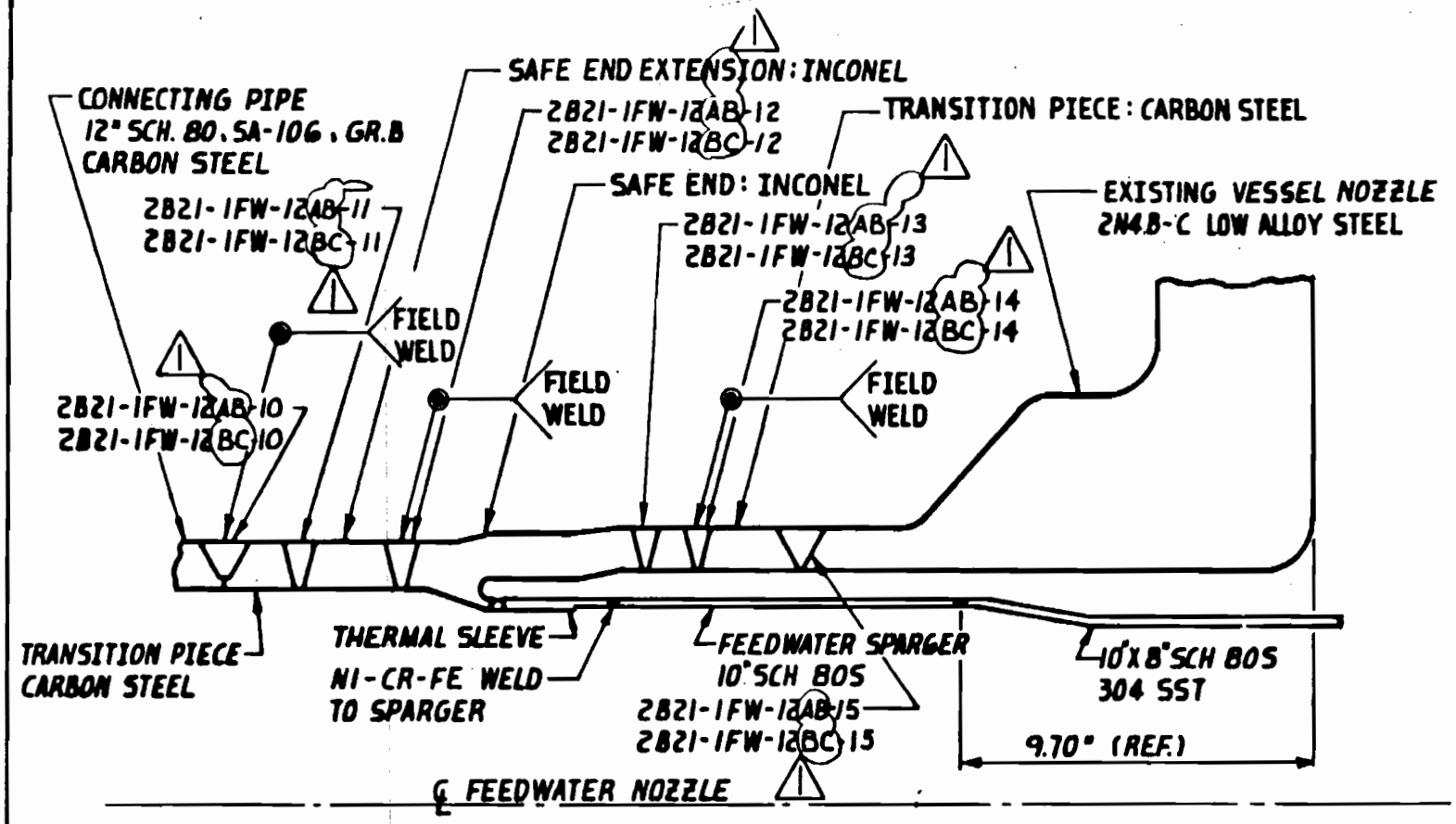

HATCH - UNIT 2

FEEDWATER NOZZLES 2N4B AND C, SAFE END AND SAFE END EXTENSION

NOTE: REFER TO CONSTRUCTION DATA PACKAGES FOR WELD METALS UTILIZED.

FIGURE A-36

REV.	DATE	BY	CHK'D	APPR 1
1	7-10-91	WGS	WS	WHC
0	3-9-87	E.N.U	MB	MB

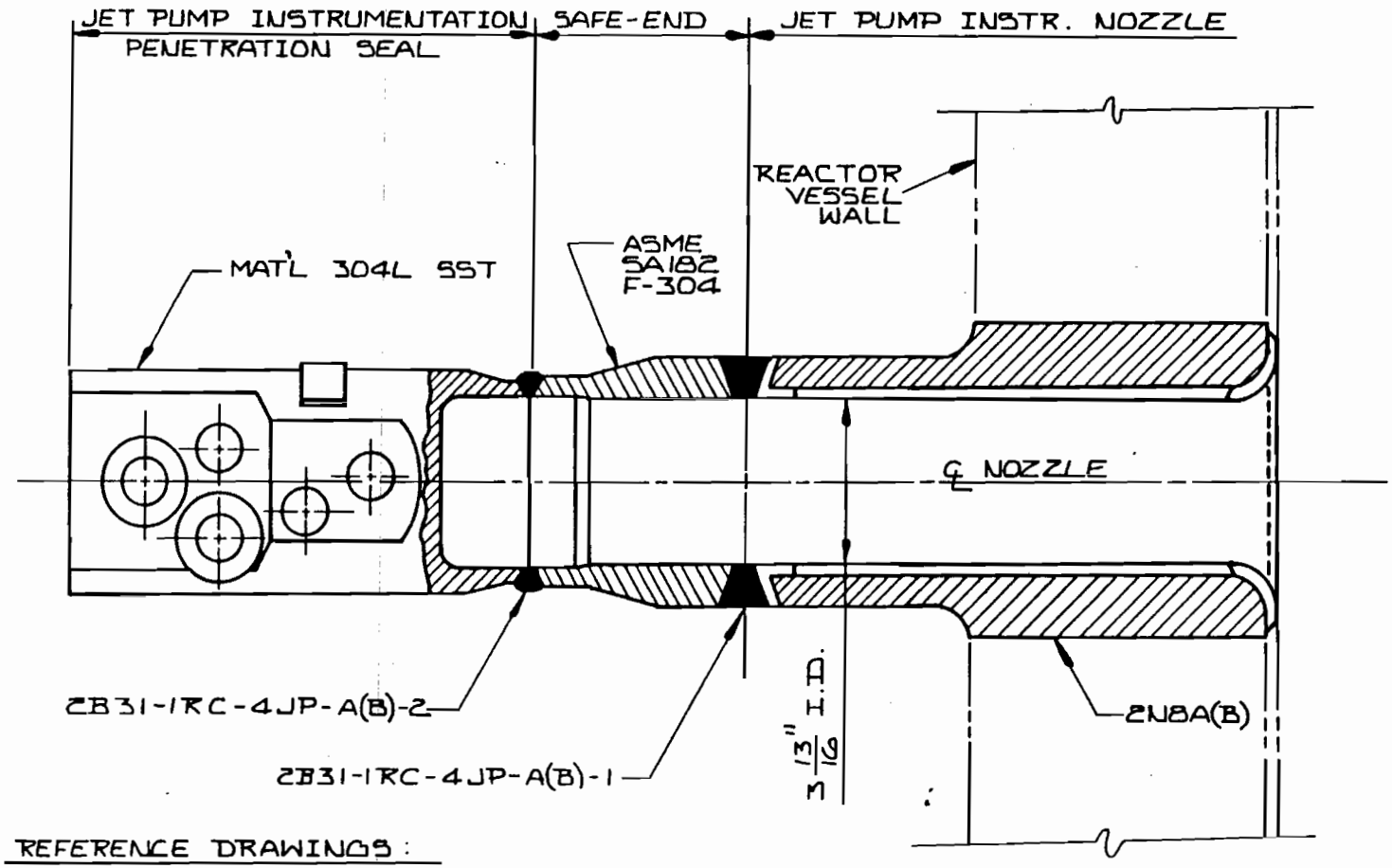

REFERENCE DRAWINGS:

1. JET PUMP INSTRUMENTATION NOZZLE___CE 11570-842-002
2. JET PUMP INSTRUMENTATION NOZZLE SAFE-END___CE 11570-841-003
3. JET PUMP INSTRUMENTATION PENETRATION SEAL_____S 19210

JET PUMP INSTRUMENTATION NOZZLE
LOCATION: REACTOR VESSEL HATCH 2 CLASS 1

FIGURE A-37

REV.	DATE	BY	CHK'D	APPR. 1
0	5/6/87	BST	WS	MB

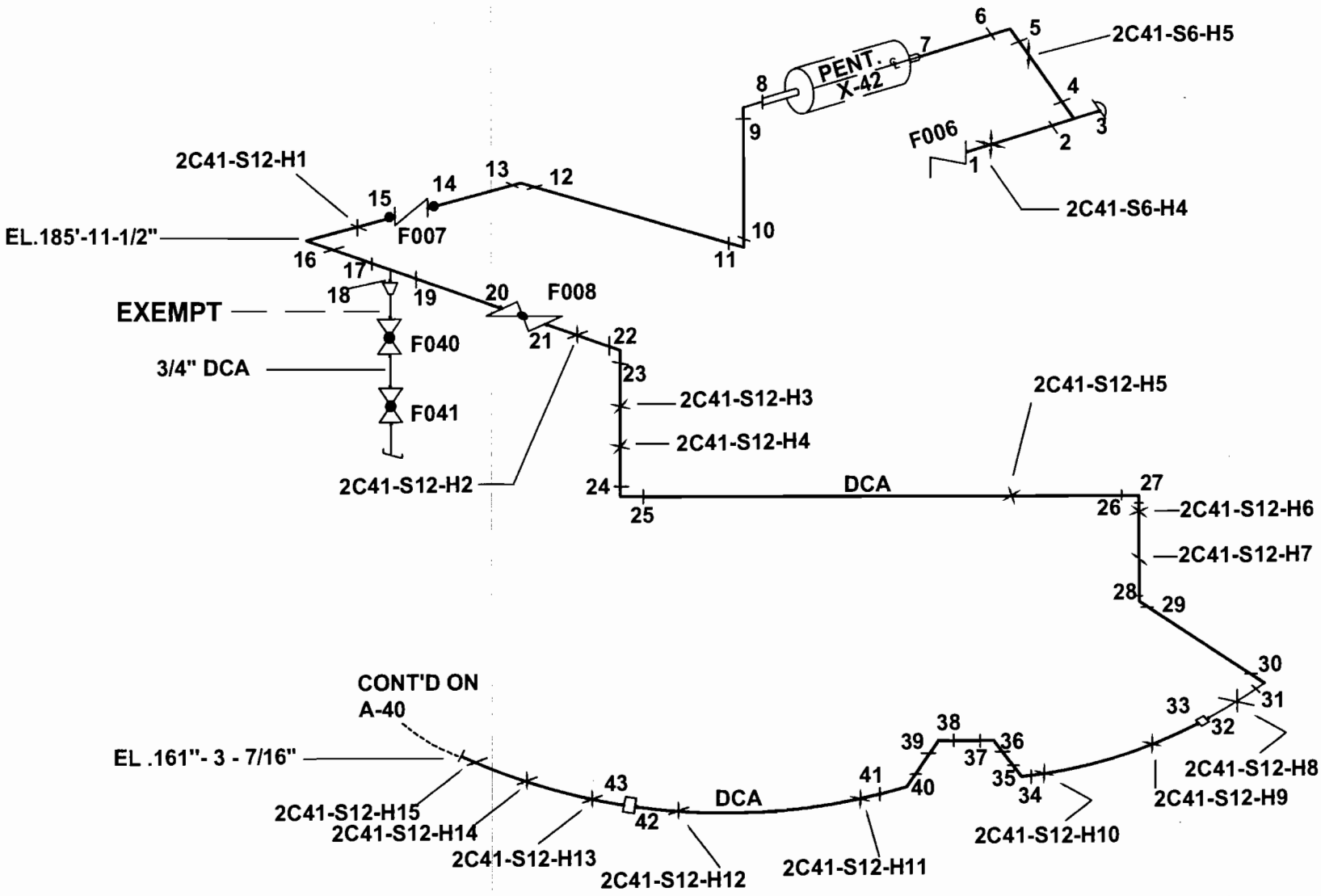

REF. ISO. S30959
S31455

STANDBY LIQUID CONTROL
2C41-1SBLC-1.5
LOCATION: DRYWELL

FIGURE A-39

0	6-19-06	RAM	MB	DS
Rev.	Date	By	CHK'D	APP.1

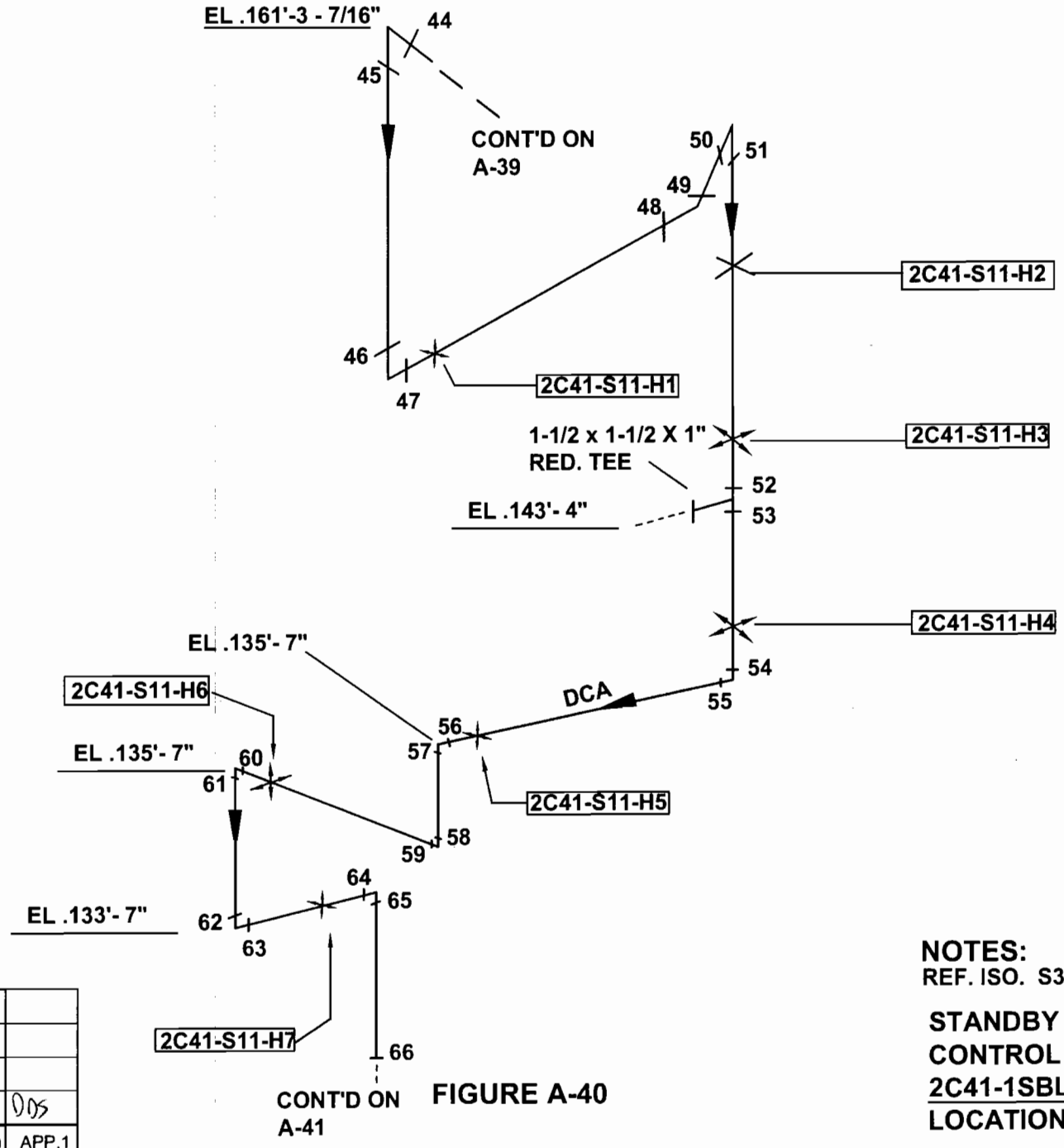

FIGURE A-40

NOTES:
REF. ISO. S31489

STANDBY LIQUID
CONTROL
2C41-1SBLC-1.5
LOCATION: DRYWELL

0	6-19-06	RAM	MB	DDS
Rev.	Date	By	CHK'D	APP.1

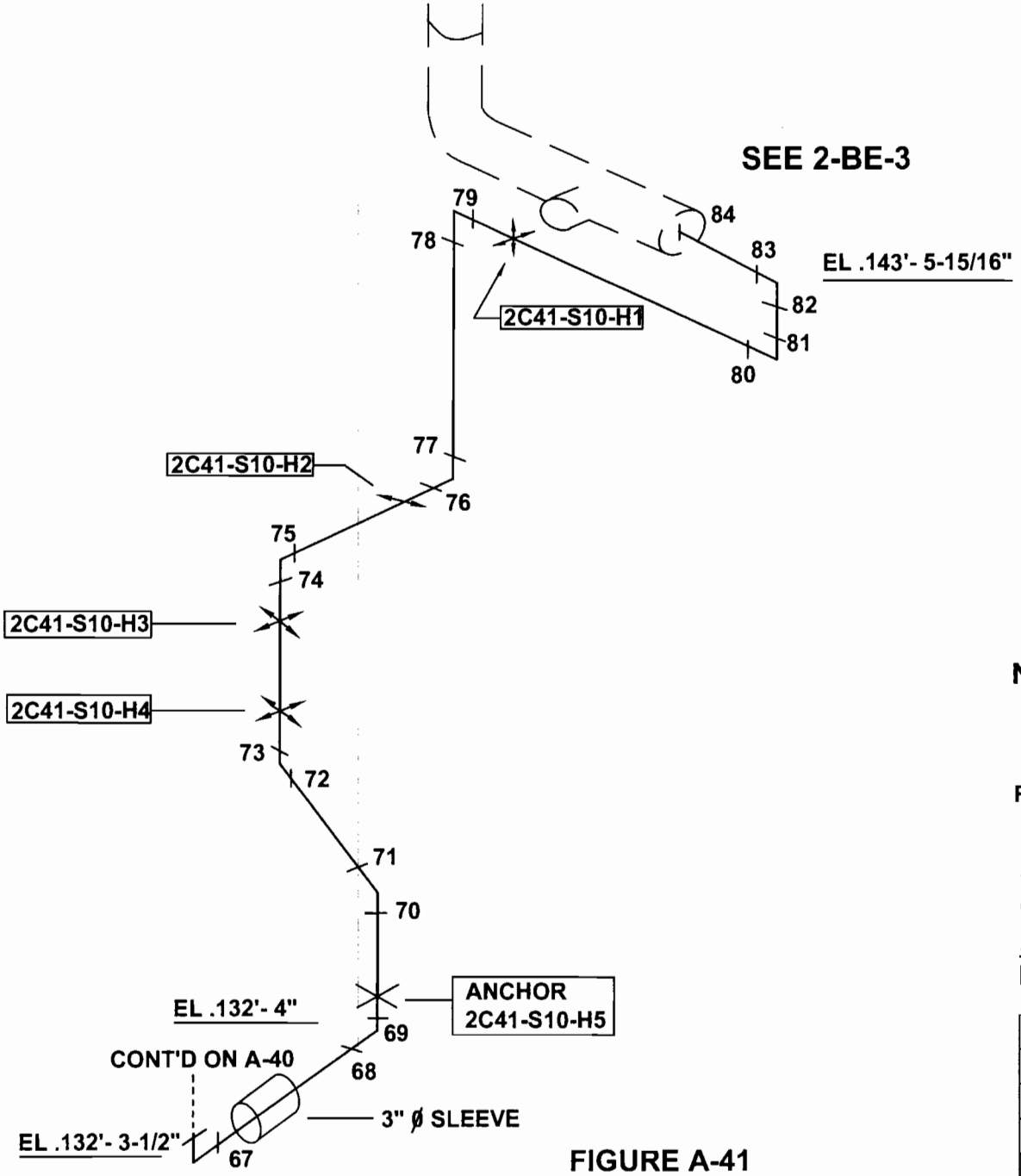

FIGURE A-41

NOTES:

REF. ISO. S31435
2-BE-3

STANDBY LIQUID
CONTROL
2C41-1SBLC-1.5
LOCATION: DRYWELL

0	6-20-06	RAM	MB	DDS
Rev.	Date	By	CHK'D	APP.1

Hatch Unit 2 Fourth Ten Year Inservice Inspection Plan
Class 2 Figures

Figure No.	Rev. No.	Description
B-1	3	Residual Heat Removal Heat Exchangers - NE and SE Diagonals
B-1A	0	Residual Heat Removal Heat Exchanger - NE Diagonal
B-1B	0	Residual Heat Removal Heat Exchanger - SE Diagonal
B-1C	0	Residual Heat Removal Heat Exchanger Welds
B-2	5	Residual Heat Removal Pumps - NE and SE Diagonals
B-2A	3	Core Spray Pumps - NE and SE Diagonals
B-3	5	Main Steam Auxiliary - Turbine Building, Condenser Bay
B-4	5	Main Steam Auxiliary - Turbine Building, Condenser Bay
B-5	4	Main Steam Auxiliary - Turbine Building, Condenser Bay
B-6	6	Main Steam Auxiliary - Turbine Building, Condenser Bay
B-7	6	Main Steam Auxiliary - Turbine Building, Condenser Bay
B-8	4	Main Steam Auxiliary - Turbine Building, Condenser Bay
B-9	8	Main Steam Auxiliary - Steam Chase
B-10	9	Main Steam Auxiliary - Steam Chase
B-11	8	Main Steam Auxiliary - Steam Chase
B-12	7	Main Steam Auxiliary - Steam Chase
B-13	-	Not Used
B-14	10	RHR - Containment Spray - A Loop - Above Torus and East Penetration Room
B-15	5	RHR - Relief Vlv Disch to Torus - Loop A -Above Torus & NE Diag at 120'
B-16	9	RHR/HPCI - Steam Supply to RHR - 120' Above Torus
B-17	10	RHR - Test Line to Torus - A Loop - Above Torus on East Side at 120'

Figure No.	Rev. No.	Description
B-18	8	RHR - Containment Spray - B Loop - Above Torus & RWCU Heat Ex. Room
B-19	6	RHR - Relief Valve Discharge to Torus - B Loop - SE Diag & Torus
B-20	-	Not Used
B-21	10	RHR - Test Line to Torus - B Loop - Above Torus
B-22	6	RHR - Fuel Pool Intertie - RWCU Heat Exchanger Room
B-23	8	RHR - Fuel Pool Intertie - Above Torus, East Pen Rm, RWCU Pump & Hx Rm
B-24	4	RHR - Service Water Intertie - Above Torus 123'-10"
B-25	3	RHR - Service Water Intertie - Above Torus by SE Diagonal
B-26	8	RHR - Discharge thru A Loop Hx - NE Diagonal
B-27	4	RHR - Discharge from A Loop Hx - NE Diagonal
B-28	5	RHR - Pump Discharge A Loop - NE Diagonal
B-29	5	RHR - Pump Discharge C Loop - NE Diagonal
B-30	9	RHR - Discharge thru B Loop Hx - SE Diagonal
B-31	7	RHR - Discharge from B Loop Hx - SE Diagonal
B-32	6	RHR - Pump Discharge B Loop - SE Diagonal
B-33	7	RHR - Pump Discharge D Loop - SE Diagonal
B-34	8	RHR - Crosstie for A and B Loops - Above Torus & East Pen Room
B-34A	-	Not Used
B-34B	-	Not Used
B-35	6	RHR - Pump A RC Suction - Torus and NE Diagonal
B-36	7	RHR - Pump B RC Suction - Torus and SE Diagonal

Figure No.	Rev. No.	Description
B-37	7	RHR - Pump C RC Suction - Torus and NE Diagonal
B-38	7	RHR - Pump D RC Suction - Torus and SE Diagonal
B-39	6	RHR - Recirc Suction - East pen Room and Above Torus Near South Wall
B-40	7	RHR - Hx Bypass - A Loop - NE Diagonal and Above Torus
B-41	6	RHR- Discharge thru B Loop Hx - NE Diagonal
B-42	8	RHR - Torus Suction - A Loop - Torus at 87'
B-43	4	RHR - Torus Suction - A Loop - NE Diagonal
B-44	7	RHR - Torus Suction - C Loop - Torus
B-45	5	RHR - Torus Suction - C Loop - NE Diagonal
B-46	5	RHR - Hx Bypass - B Loop - SE Diagonal and Above Torus
B-47	4	RHR - Discharge thru B Loop Hx - SE Diagonal
B-48	8	RHR - Torus suction - B Loop - Torus at 87'
B-49	6	RHR - Torus Suction - B Loop - SE Diagonal
B-50	7	RHR - Torus Suction - D Loop - Torus at 87'
B-51	5	RHR - Torus Suction - D Loop - SE Diagonal
B-52	5	Core Spray - Pump Discharge - Loop A - North Side of Drywell
B-53	6	Core Spray - Test Line to Line - Loop A - NE Diag and Above Torus
B-54	6	Core Spray - Pump Discharge - Loop B - RWCU Heat Exchanger Room
B-55	6	Core Spray - Test Line to Torus - Loop B - SE Diagonal Above Torus
B-56	11	Core Spray - Pump Discharge - A Loop - NE Diagonal
B-57	7	Core Spray - Pump Discharge - A Loop - Above Torus

Figure No.	Rev. No.	Description
B-58	6	Core Spray - Pump Discharge - A Loop - North Side of Drywell
B-59	8	Core Spray - Pump Discharge - B Loop - SE Diagonal
B-60	6	Core Spray - Pump Discharge - B Loop - Above Torus North Side of Drywell
B-60A	5	Core Spray - Suction from Cond. Stor. - A Loop - NE Diagonal
B-60B	6	Core Spray - Suction from Cond. Stor. - B Loop - SE Diagonal
B-61	7	Core Spray - Pump Suction - A Loop - Torus at 87'
B-62	6	Core Spray - Pump Suction - A Loop - NE Diagonal
B-63	8	Core Spray - Pump Suction - B Loop - Torus at 87'
B-64	7	Core Spray - Pump Suction - B Loop - SE Diagonal
B-65	6	HPCI - Pump Discharge - HPCI Turbine Room
B-66	9	HPCI – Pump Discharge – Alongside & Above Torus & Main Steam Chase Area
B-66A	0	HPCI, RWCU and Feedwater Systems – Main Steam Chase
B-66B	0	RCIC and Feedwater Systems – Main Steam Chase
B-67	8	HPCI - Steam Supply - East Penetration Room and Above Torus
B-68	8	HPCI – Steam Supply – HPCI Turbine Room
B-69	7	HPCI – Turbine Exhaust – HPCI Turbine Room and Above Torus
B-70	7	HPCI – Discharge to Cond. Storage – HPCI Turbine Room
B-71	2	HPCI – Pump Crossover – HPCI Turbine Room
B-72	5	HPCI – Rupture Disc – Above the Torus
B-73	9	HPCI – Pump Suction from Torus – Reactor Building/Torus at 90'
B-73A	5	HPCI – 16" Pump Suction from Condensate Tank – Reactor Bldg/Torus at 90'

Figure No.	Rev. No.	Description
B-74	4	HPCI – Turbine Exhaust – HPCI Room
B-75	5	HPCI – Turbine Exhaust – Above the Torus
B-76	5	TDP – Torus Drain – Exits Torus Near SW Ladder at 87'
B-77	6	CPI – Reactor Building Drywell and Torus Purge System – Above Torus
B-78	6	Primary containment Purge and Inerting – Above the Torus
B-79	7	Primary containment Purge and Inerting – Above Torus Near SE Wall
B-80	5	Primary Containment Purge and Inerting – 193' South Wall
B-81	6	Primary Containment Purge and Inerting – North Wall in Torus at 120'
B-82	9	RCIC – Turbine Exhaust – Torus and NW Diagonal
B-83	5	CRD – RWCU Connection – Main Steam Chase
B-84	5	Scram Discharge Volume Control Rod Drive – Southside of Drywell
B-85	5	Scram Discharge Volume Control Rod Drive – Northside of Drywell
B-86	6	RCIC System – Torus Room
B-87	3	RCIC System – Torus Room
B-88	3	RCIC System – Torus Room
B-89	4	RCIC System – Torus Room
B-90	5	RCIC System – Torus Room– (Class S)
B-91	5	RCIC System – Reactor Building – (Class S)
B-92	-	Not Used
B-93	1	MC/Section XI Penetrations – Torus
B-94	-	Not Used

Figure No.	Rev. No.	Description
B-95	6	RCIC – Steam to Pump Turbine – Reactor Building 9 – (Class S)
B-96	7	RCIC – Steam to Pump Turbine – Reactor Building – (Class S)
B-97	-	Not Used
B-98	-	Not Used
B-99	-	Not Used
B-100	-	Not Used
B-101	3	RHR to Core spray Test Line – B Side – SE Diagonal (Exempt)
B-102	-	Not Used

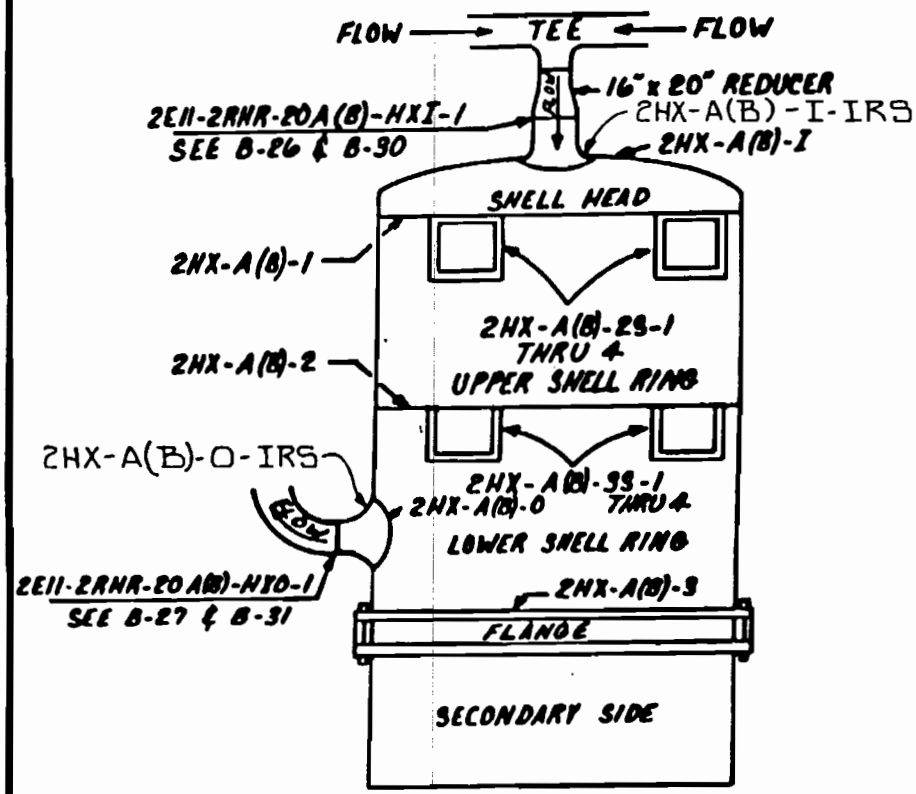

THE ZERO REFERENCE LOCATION (0) FOR THE CIRCUMFERENCIAL SHELL WELDS IS THE CENTERLINE OF THE OUTLET NOZZLE 2HX-A(B)-O

FIGURE B-1

RESIDUAL HEAT REMOVAL HEAT EXCHANGERS
MATCH 2, CLASS 2

LOCATION: NORTHEAST AND SOUTHEAST DIAGONALS

REV.	DATE	BY	CHK'D	APPR 1
3	11-30-90	LIGS	WS	WHC
2	4/13/87	BKG	[illegible]	[illegible]
1	[illegible]	[illegible]	[illegible]	[illegible]

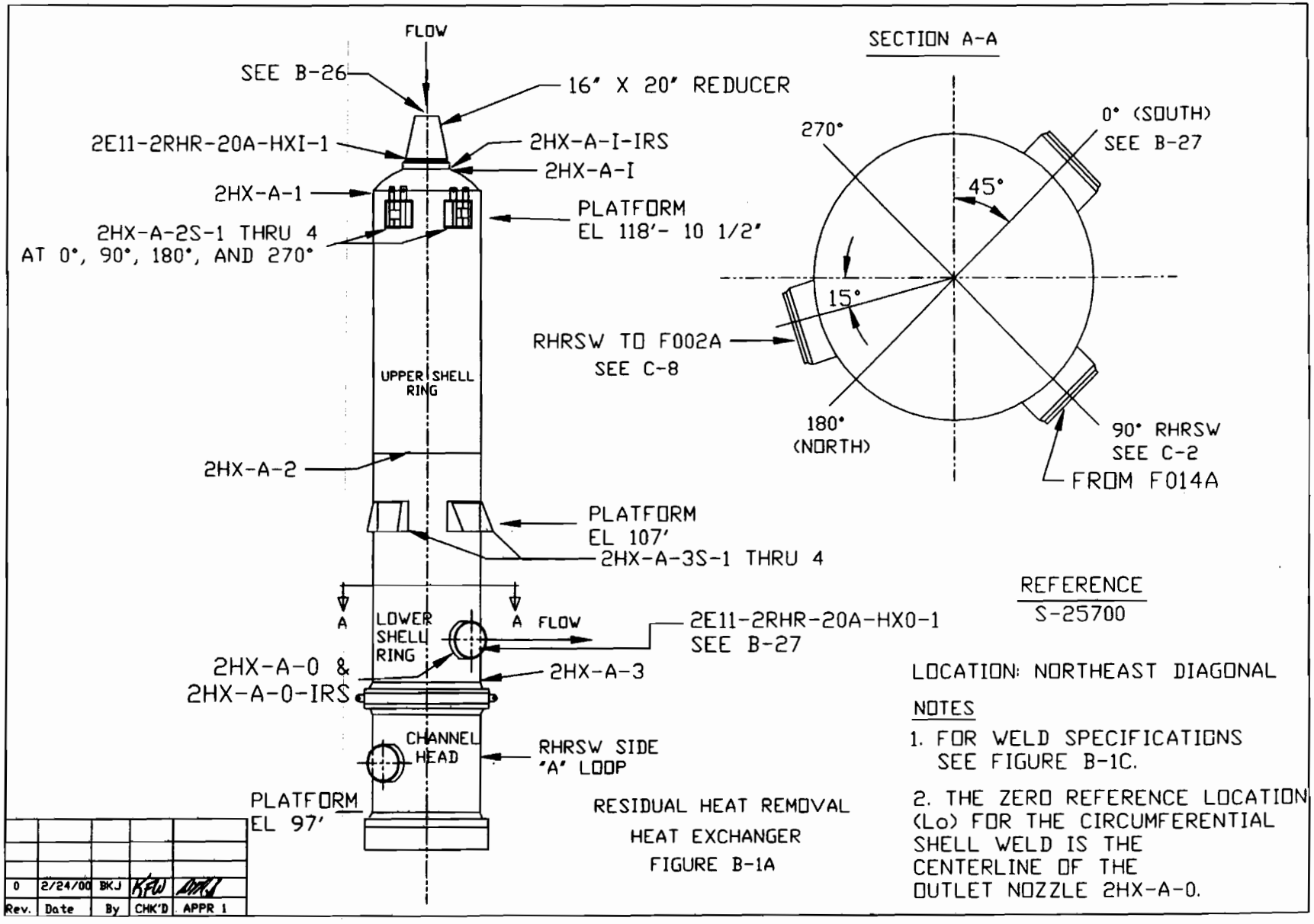
FLOW
SEE B-26
16" X 20" REDUCER
2E11-2RHR-20A-HXI-1
2HX-A-I-IRS
2HX-A-I
2HX-A-1
PLATFORM
EL 118'- 10 1/2"
2HX-A-2S-1 THRU 4
AT 0°, 90°, 180°, AND 270°
UPPER SHELL RING
2HX-A-2
PLATFORM
EL 107'
2HX-A-3S-1 THRU 4
A
A
FLOW
LOWER SHELL RING
2E11-2RHR-20A-HX0-1
SEE B-27
2HX-A-0 &
2HX-A-0-IRS
2HX-A-3
CHANNEL HEAD
RHRSW SIDE
'A' LOOP
PLATFORM
EL 97'
SECTION A-A
270°
0° (SOUTH)
SEE B-27
45°
15°
RHRSW TO F002A
SEE C-8
180°
(NORTH)
90° RHRSW
SEE C-2
FROM F014A
REFERENCE
S-25700
LOCATION: NORTHEAST DIAGONAL
NOTES
1. FOR WELD SPECIFICATIONS SEE FIGURE B-1C.
2. THE ZERO REFERENCE LOCATION (Lo) FOR THE CIRCUMFERENTIAL SHELL WELD IS THE CENTERLINE OF THE OUTLET NOZZLE 2HX-A-0.
RESIDUAL HEAT REMOVAL
HEAT EXCHANGER
FIGURE B-1A
0 2/24/00 BKJ
Rev. Date By CHK'D APPR 1

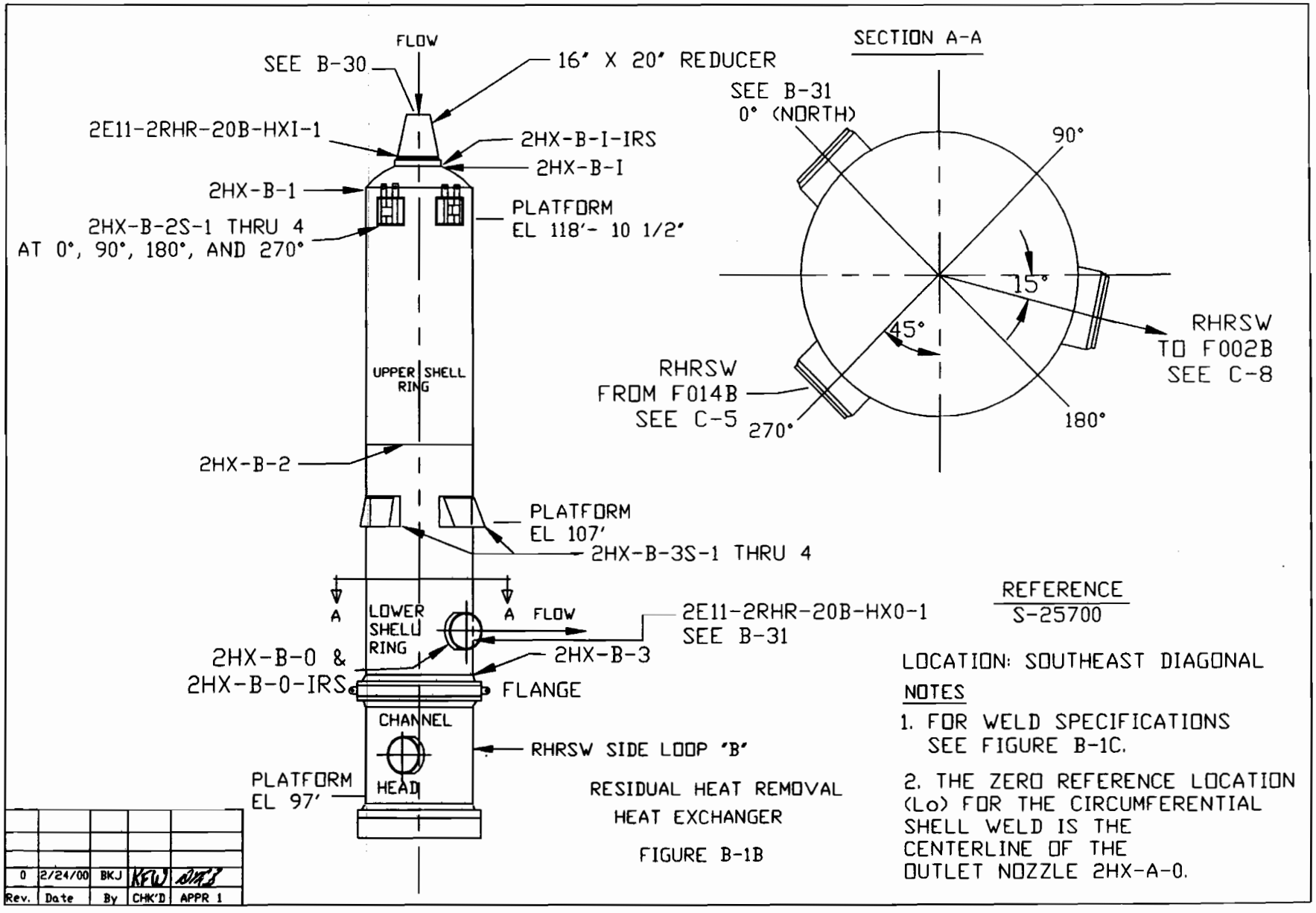
FLOW
SEE B-30
16" X 20" REDUCER
2E11-2RHR-20B-HXI-1
2HX-B-I-IRS
2HX-B-I
2HX-B-1
PLATFORM
EL 118'- 10 1/2"
2HX-B-2S-1 THRU 4
AT 0°, 90°, 180°, AND 270°
UPPER SHELL RING
2HX-B-2
PLATFORM
EL 107'
2HX-B-3S-1 THRU 4
A
A
LOWER SHELL RING
FLOW
2E11-2RHR-20B-HX0-1
SEE B-31
2HX-B-0 &
2HX-B-0-IRS
2HX-B-3
FLANGE
CHANNEL
HEAD
RHRSW SIDE LOOP 'B'
PLATFORM
EL 97'
SECTION A-A
SEE B-31
0° (NORTH)
90°
15°
45°
RHRSW
TO F002B
SEE C-8
RHRSW
FROM F014B
SEE C-5
270°
180°
REFERENCE
S-25700
LOCATION: SOUTHEAST DIAGONAL
NOTES
1. FOR WELD SPECIFICATIONS SEE FIGURE B-1C.
2. THE ZERO REFERENCE LOCATION (Lo) FOR THE CIRCUMFERENTIAL SHELL WELD IS THE CENTERLINE OF THE OUTLET NOZZLE 2HX-A-0.
RESIDUAL HEAT REMOVAL
HEAT EXCHANGER
FIGURE B-1B
0 | 2/24/00 | BKJ | KFW
Rev. | Date | By | CHK'D | APPR 1

HEAD AND SHELL MATERIAL - SA-516-70
NOZZLE'S MATERIAL - SA-541 CLASS1

RHR HEAT EXCHANGER WELDS

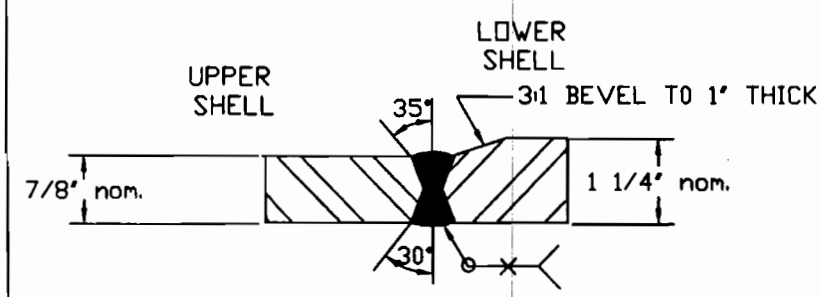

2HX-A(B)-2

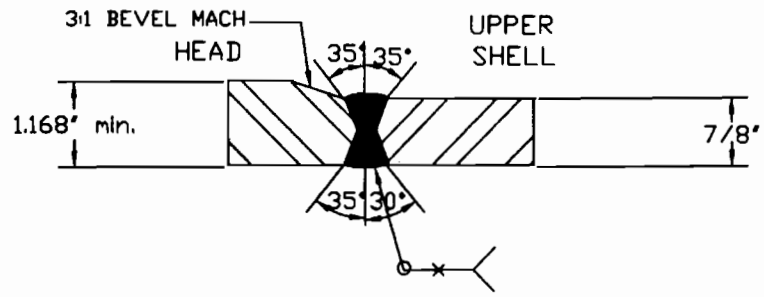

2HX-A(B)-1

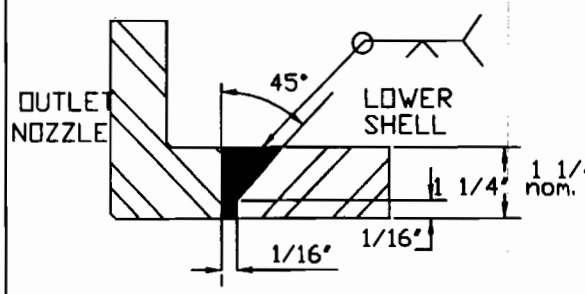

2HX-A(B)-0

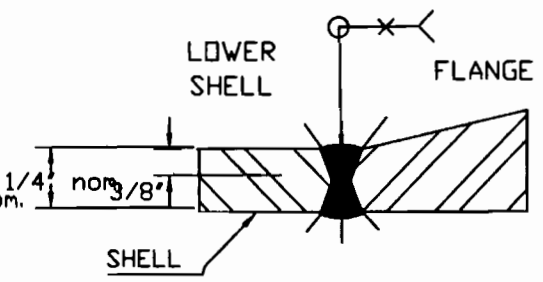

2HX-A(B)-3

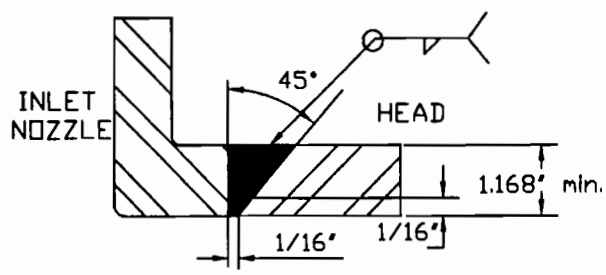

2HX-A(B)-I

REV	DATE	BY	CHK'D	APPR 1
0	2/24/00	BKJ	KFW	DRA

FIGURE B-1C

REFERENCE
S-25700

THIS FIGURE DEPICTS [illegible] RHR PUMPS A,B,C,& D

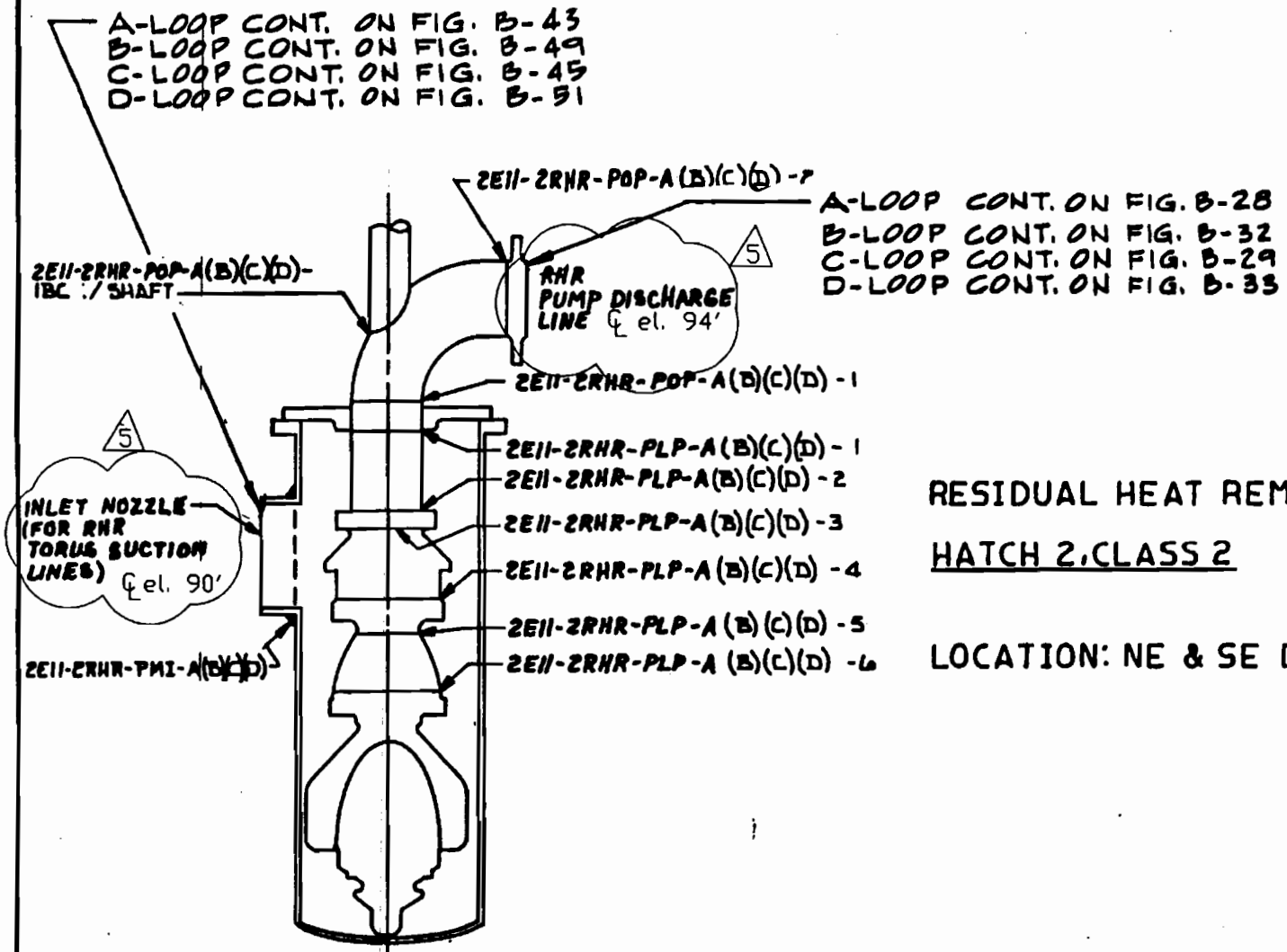

RESIDUAL HEAT REMOVAL PUMPS

HATCH 2, CLASS 2

LOCATION: NE & SE DIAGONALS

REV.	DATE	BY	CHK'D	APPR. 1
5	1-5-01	RPW	BYS	[illegible]
3	11-30-90	WGS	WS	WHC
2	4/13/87	BKG	BST	CWD
4	8-12-91	WGS	WS	WHC

FIGURE B-2

THIS FIGURE DEPICTS THE
CS PUMPS A & B

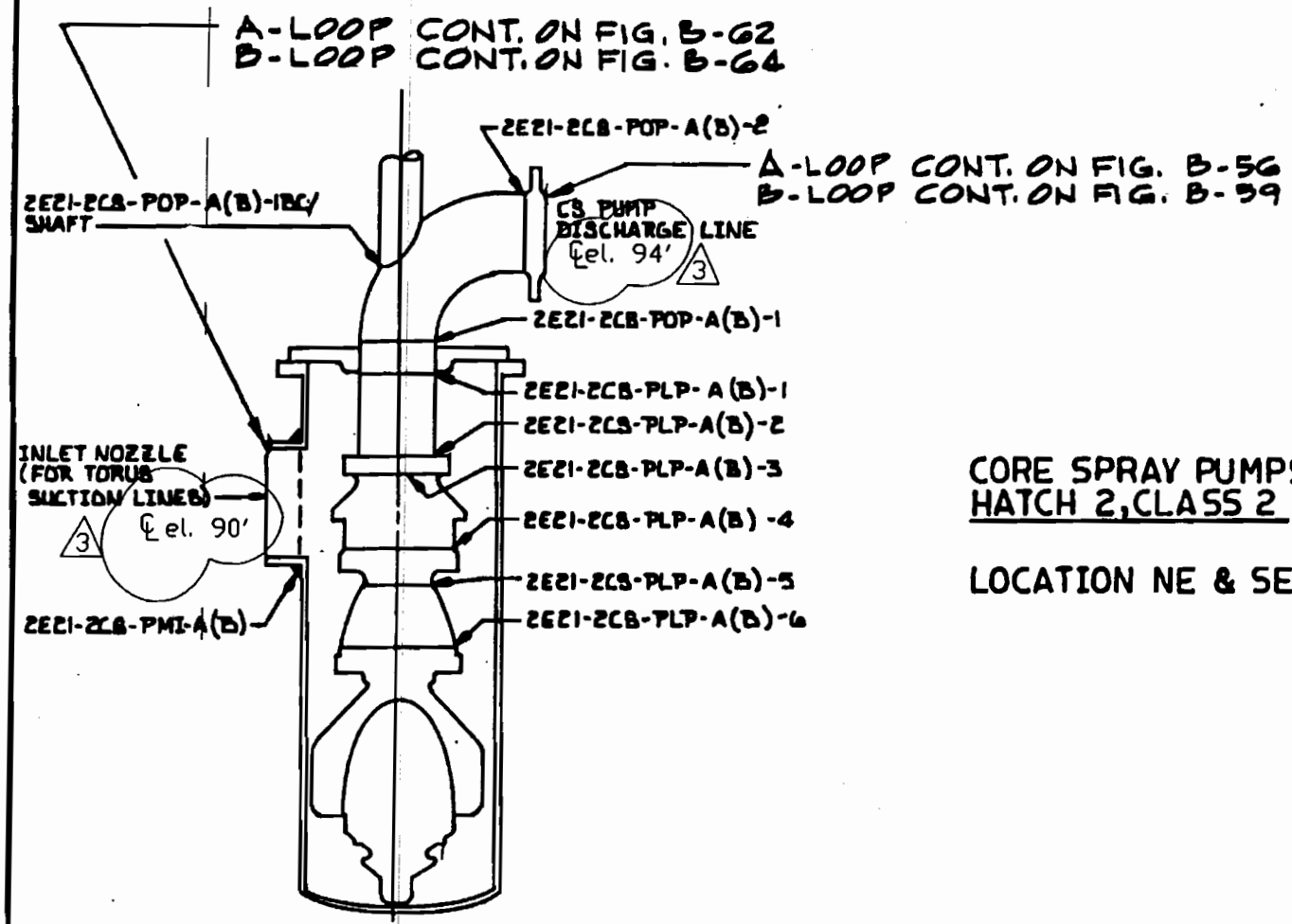

CORE SPRAY PUMPS
HATCH 2, CLASS 2

LOCATION NE & SE DIAGONALS

REV.	DATE	BY	CHK'D	APPR 1
3	1-5-01	RPW	BCJ	DRA
2	8-12-91	HGS	WS	WHC
1	11-30-90	HGS	WS	WHC
0	5/27/87	BKG	[illegible]	CWD

FIGURE B-2A

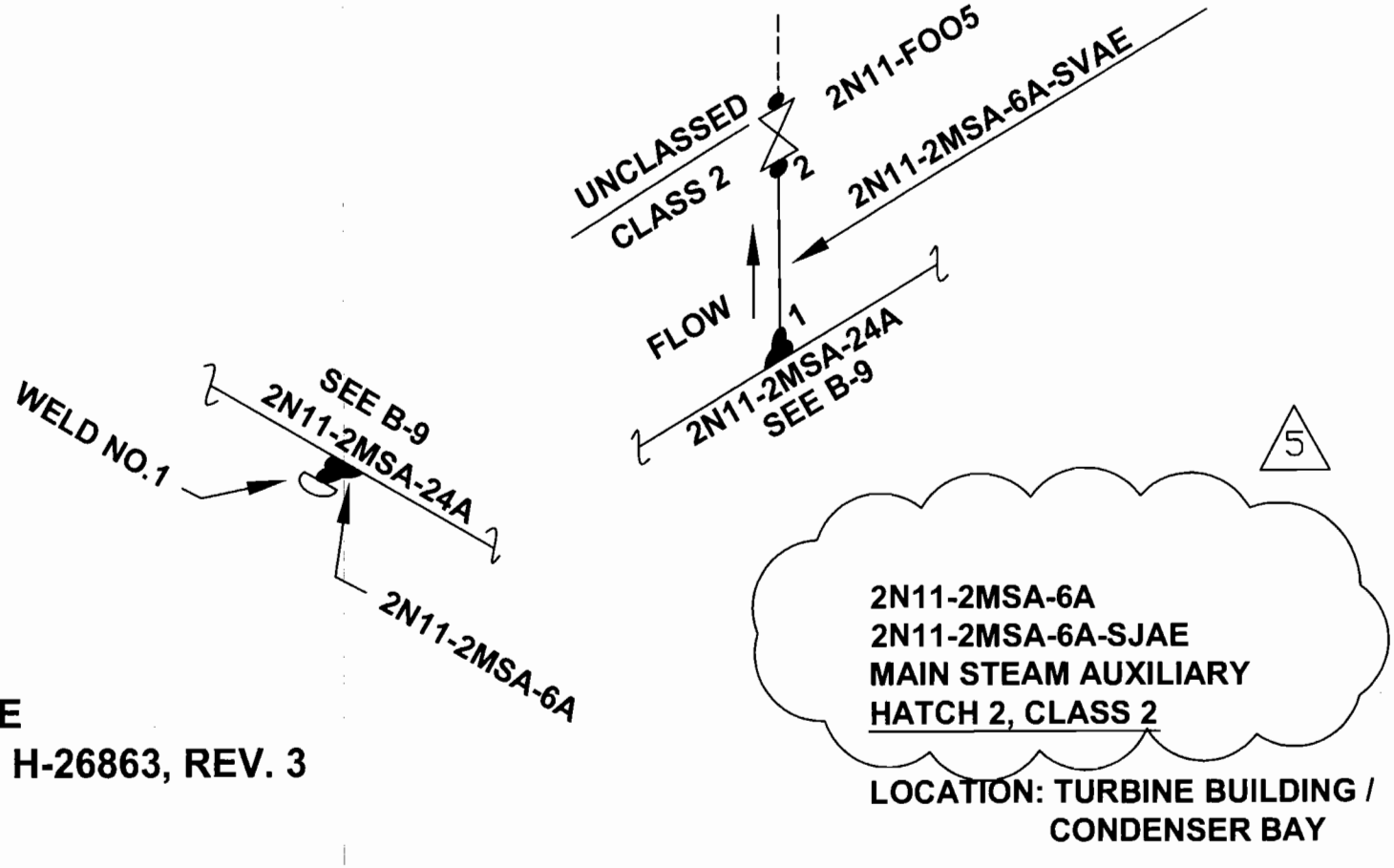

REFERENCE
ISOMETRIC H-26863, REV. 3

LOCATION: TURBINE BUILDING / CONDENSER BAY

5	08-15-06	RAM	KO	DDS
4	10-29-04	TAS	KSJ	DDS
Rev.	Date	By	CHK'D	APP.1

FIGURE B-3

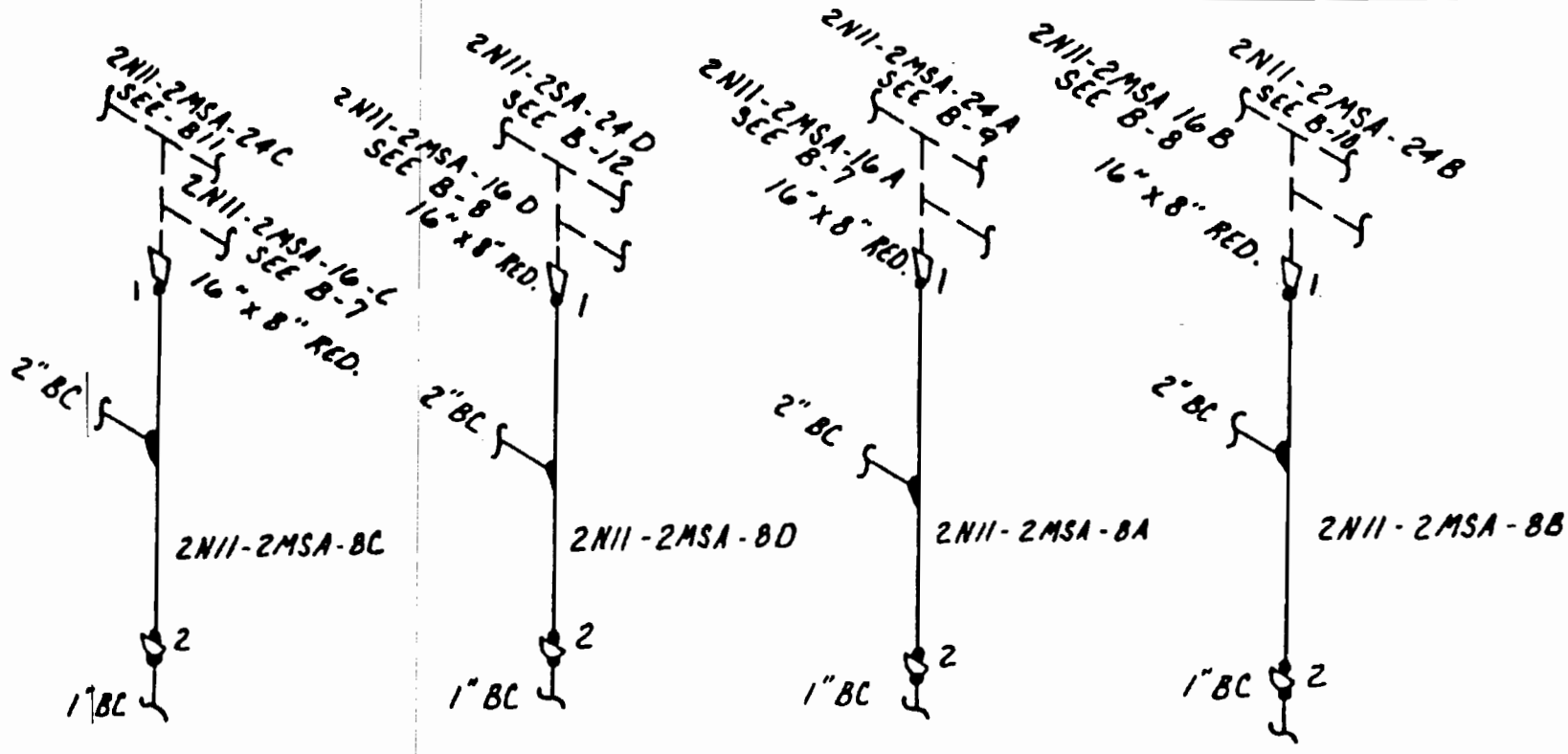

REFERENCE
ISOMETRIC H-26864, REV. 3

5

5

3

FIGURE B-4

2N11-2MSA-8A
2N11-2MSA-88
2N11-2MSA-8C
2N11-2MSA-8D
MAIN STEAM AUXILIARY
HATCH 2, CLASS 2

LOCATION: TURBINE BUILDING,
CONDENSER BAY, &
STEAM CHASE

5	10-29-04	TAS	KJP	DDS
Rev.	Date	By	CHK'D	APP.1

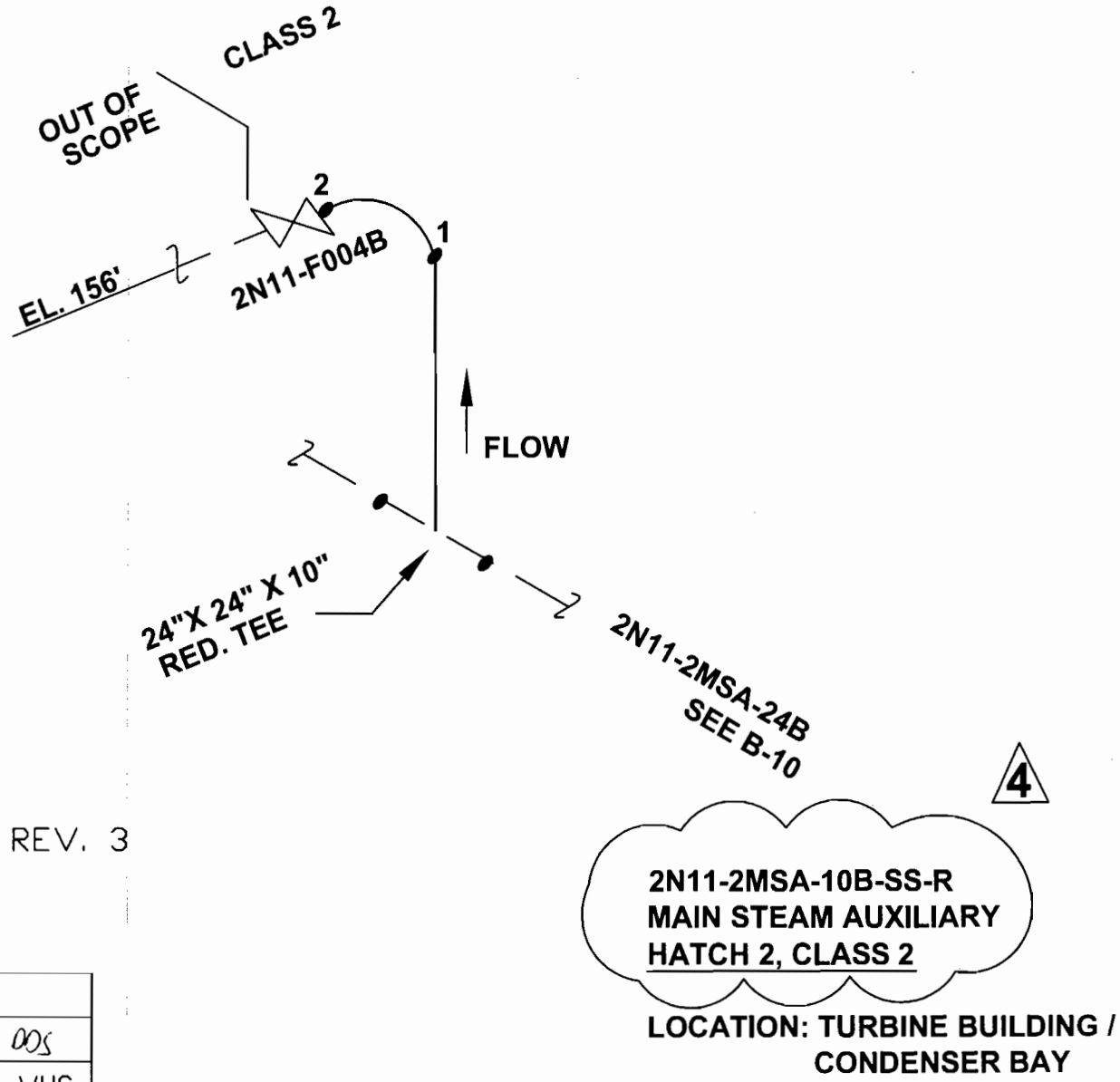

REFERENCE
MAIN STEAM - H26864 REV. 3

4	08-15-06	RAM	KO	DDS
3	11-30-90	WGS	WS	WHC
2	3-2-87	BST	WS	MB
Rev.	Date	By	CHK'D	APP.1

FIGURE B-5

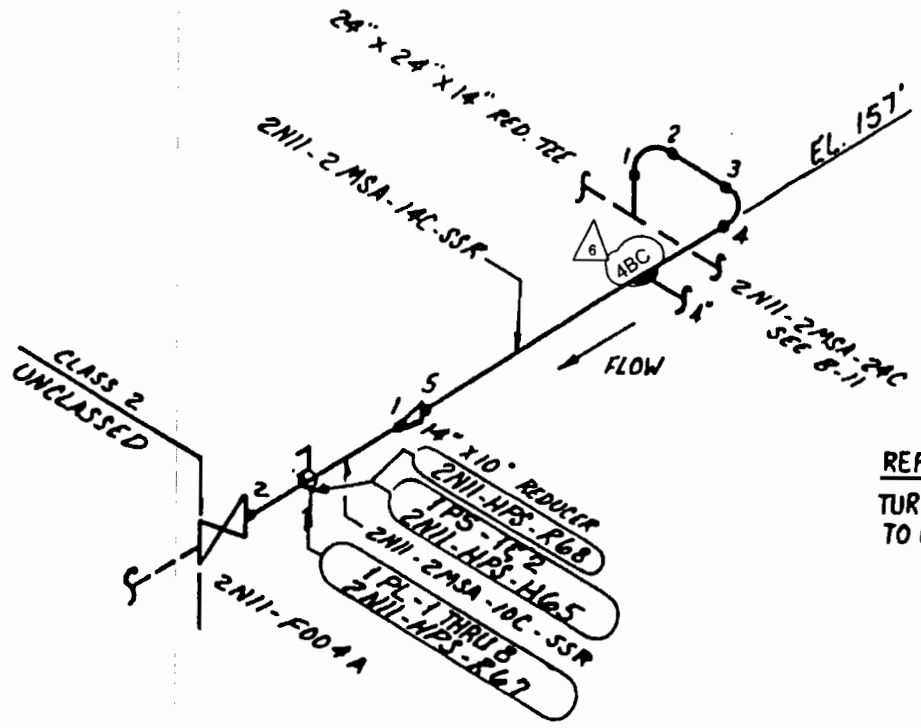

REFERENCES;

TURB. BLDG. H.P. STEAM
TO R.F.P. TURBINE-ISO. __ H-26862
REV. 1
6

STEAM TO RFP TURBINE
2N11-2MSA-10C-SSR
2N11-2MSA-14C-SSR
MAIN STEAM AUXILIARY
HATCH 2, CLASS 2

LOCATION: TURBINE BUILLING;
CONDENSER BAY
STEAM CHASE

REV	DATE	BY	CHK'D	APPR. 1
6	10-11-04	TAS	KSP	DDS
5	1-05-01	RPW	BKJ	DRG
4	11-30-90	WGS	WS	WHC
3	4/13/87	BKG	BST	C
2	3/2/87	BST	WS	MB

FIGURE B-6

REFERENCES:

MAIN STEAM PIPING__ H-26864 REV. 3 AND H-26869 REV. 0

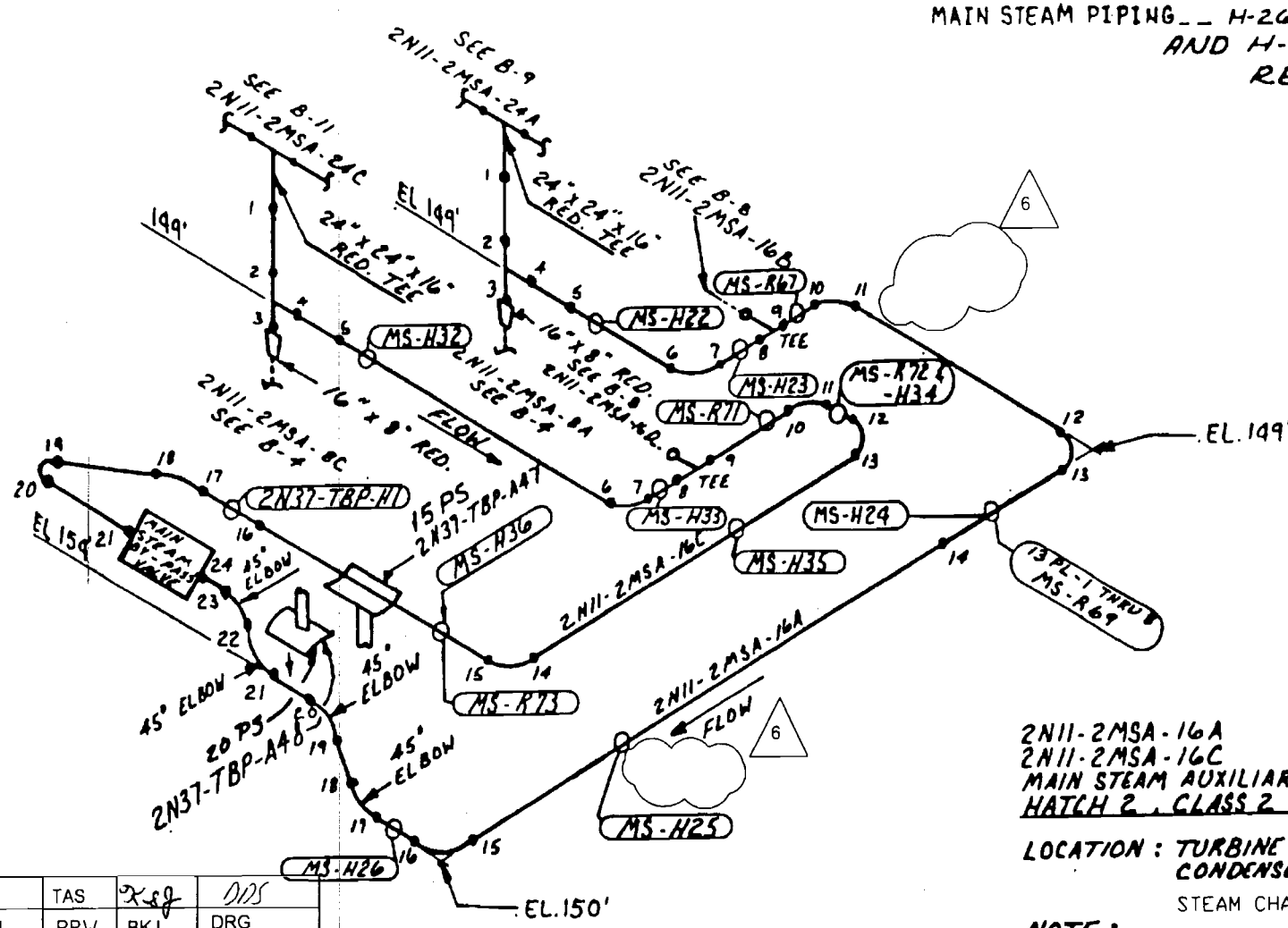

2N11-2MSA-16A
2N11-2MSA-16C
MAIN STEAM AUXILIARY
HATCH 2, CLASS 2

LOCATION: TURBINE BUILDING; CONDENSER BAY

STEAM CHASE

NOTE: ALL DEVICE NUMBERS PRECEDED BY 2N11 UNLESS OTHERWISE INDICATED.

REV	DATE	BY	CHK'D	APPR. 1
6	9-8-04	TAS	KSJ	DDS
5	1-05-01	RPW	BKJ	DRG
4	11-30-90	LJG	WS	WHC
3	5-28-87	CSB	SIAM	C.D
2	3/2/87	BST	WS	MW

FIGURE B-7

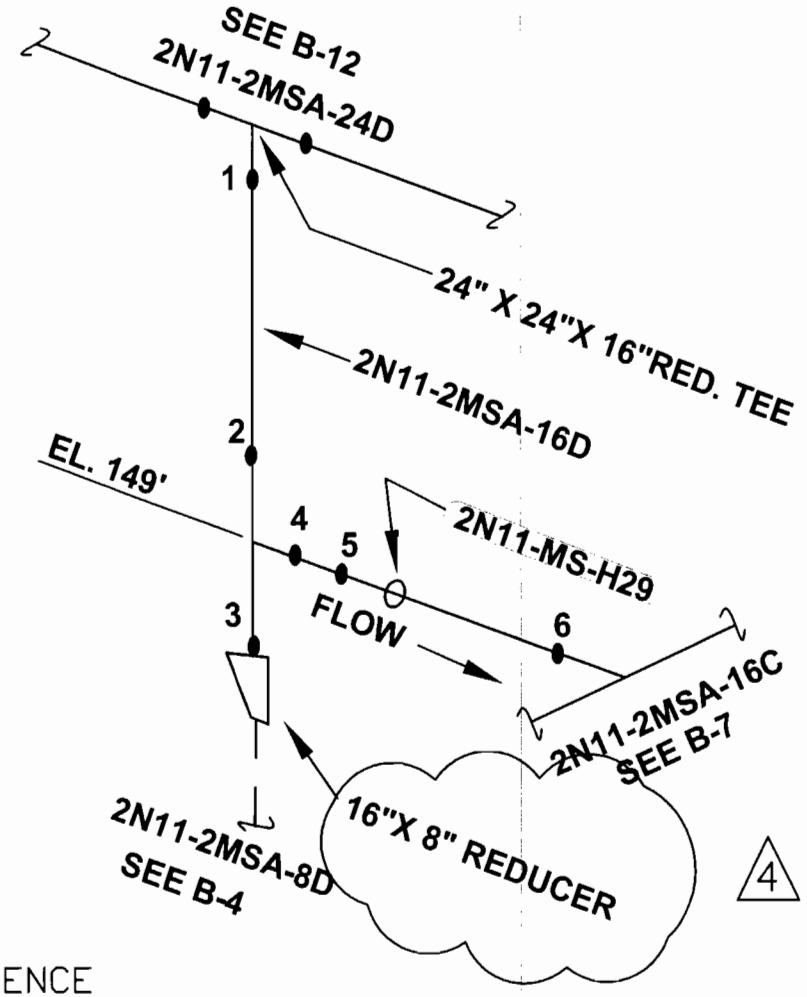

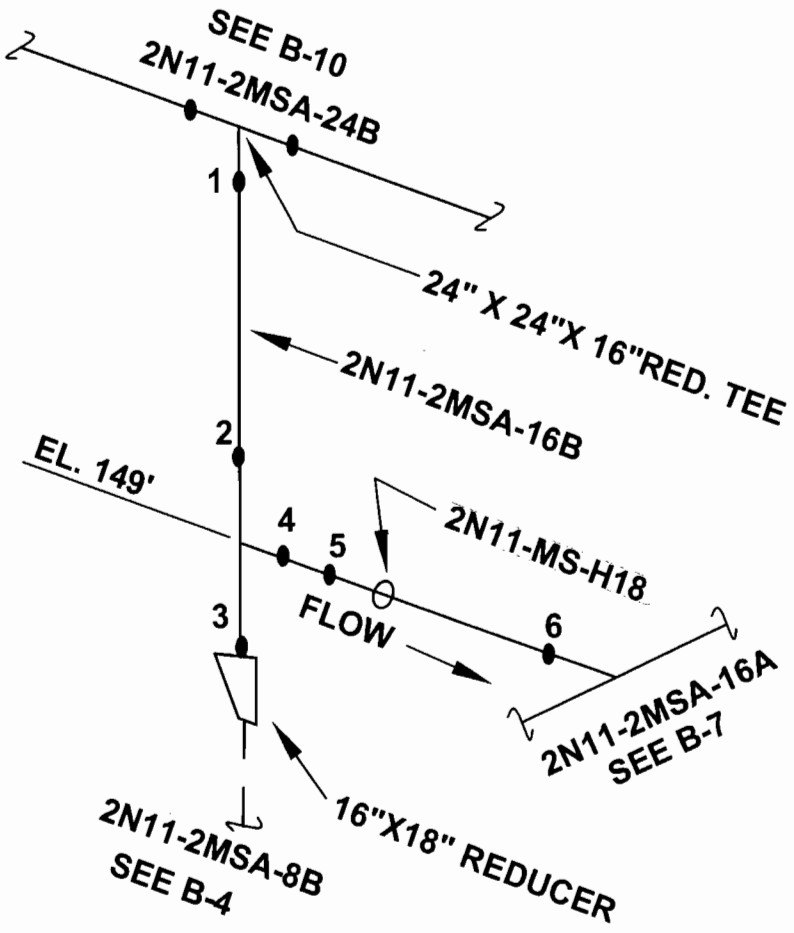

REFERENCE
MAIN STEAM - H26864 REV. 3

4	08-15-06	RAM	KO	DDS
3	11-30-90	WGS	WS	WHC
2	3-2-87	BST	WS	MB
Rev.	Date	By	CHK'D	APP.1

FIGURE B-8

2N11-2MSA-16B
2N11-2MSA-16D
MAIN STEAM AUXILIARY
HATCH 2, CLASS 2

LOCATION: TURBINE BUILDING / CONDENSER BAY

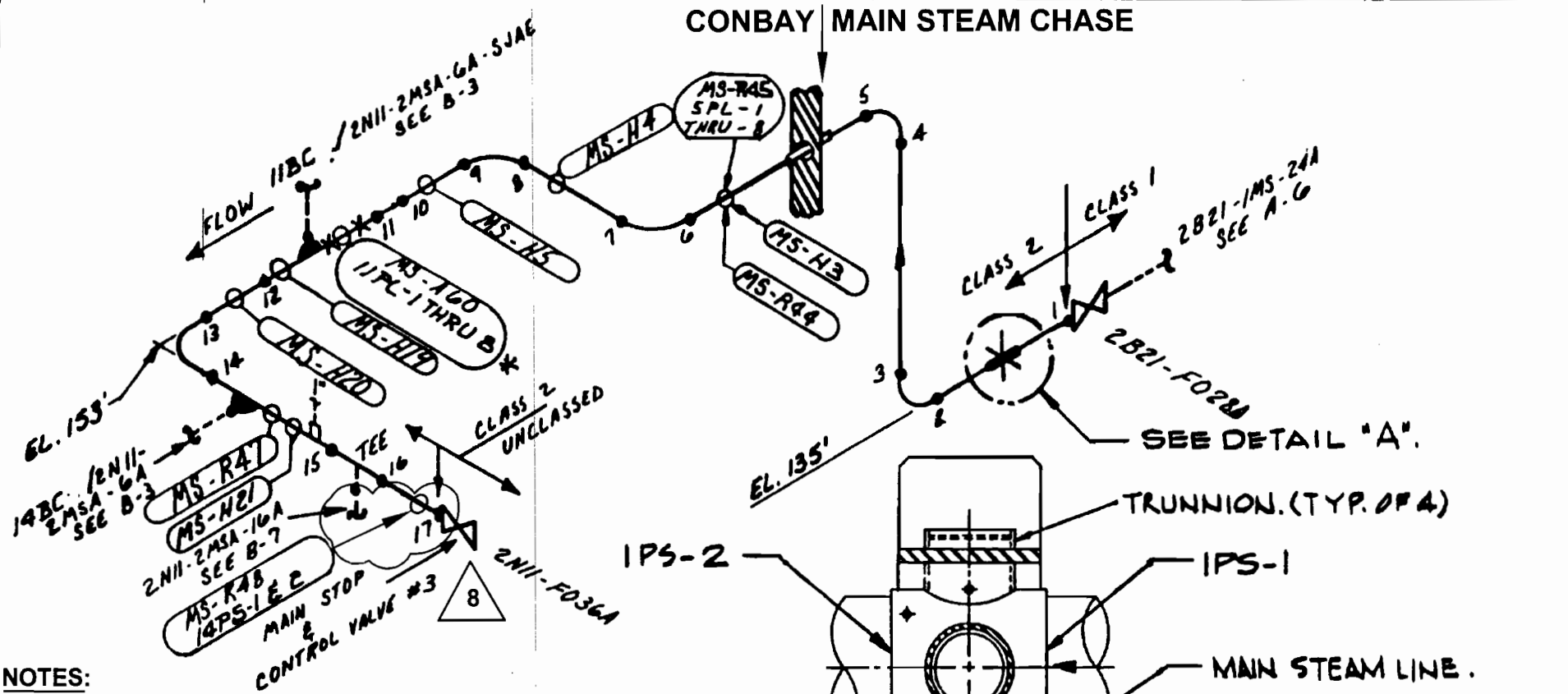

NOTES:

1.)* THIS HANGER ALSO SHOWN ON FIG.8 B-10,B-11,& B-12

REFERENCES:

MAIN STEAM PIPING
ISO. SHT 1-------H-26861 REV. 1
H-26864 REV. 3

MAIN STEAM PIPING ANCHOR
BERGEN-PATTERSON DWG. # E-016-2

REV.	DATE	BY	CHK'D	APPR. 1
8	08-16-06	RAM	KO	DDS
7	10-11-04	SMM	KSJ	DDS
6	6/10/91	WGS	WS	WHC
5	11-30-90	WGS	WS	WHC

FIGURE B-9

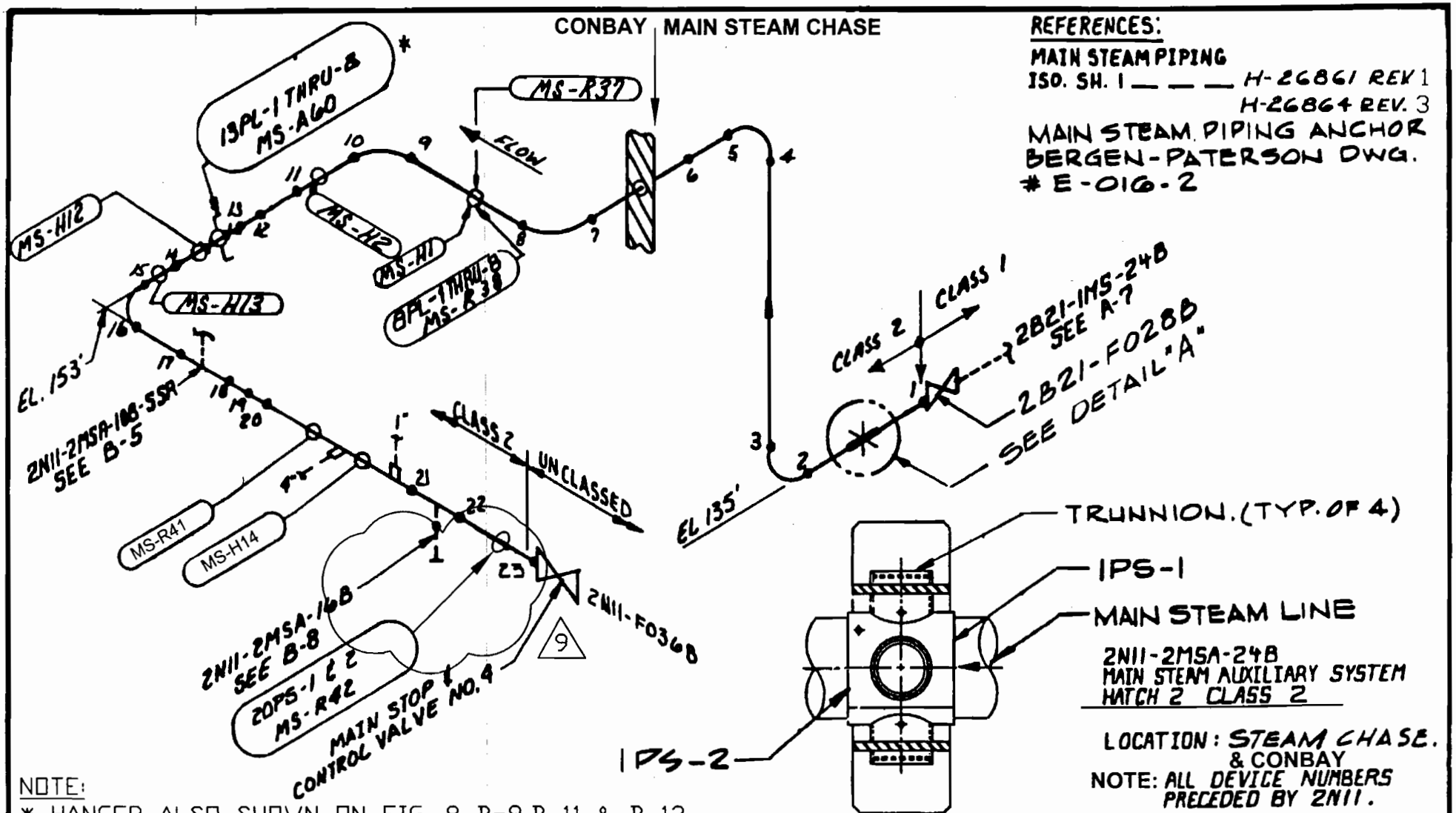

NOTE:
* HANGER ALSO SHOWN ON FIG. 8 B-9, B-11 & B-12

REV	DATE	BY	CHK'D	APPR. 1
9	8-16-06	RAM	RO	DOS
8	9-23-04	SMM	KSJ	TAS
7	6-10-91	WGS	WS	WHC
6	11-30-90	WGS	WS	WHC
8	9-23-04	SM	KSJ	DMS

ANCHOR - DETAIL "A"

FIGURE B-10 (UI 3)

REFERENCES:
MAIN STEAM PIPING
ISO. SH. 1 — — — — — H-26861 REV. 1
H-26864 REV. 3

MAIN STEAM PIPING ANCHOR-
BERGEN-PATERSON DWG.
E-016-2.

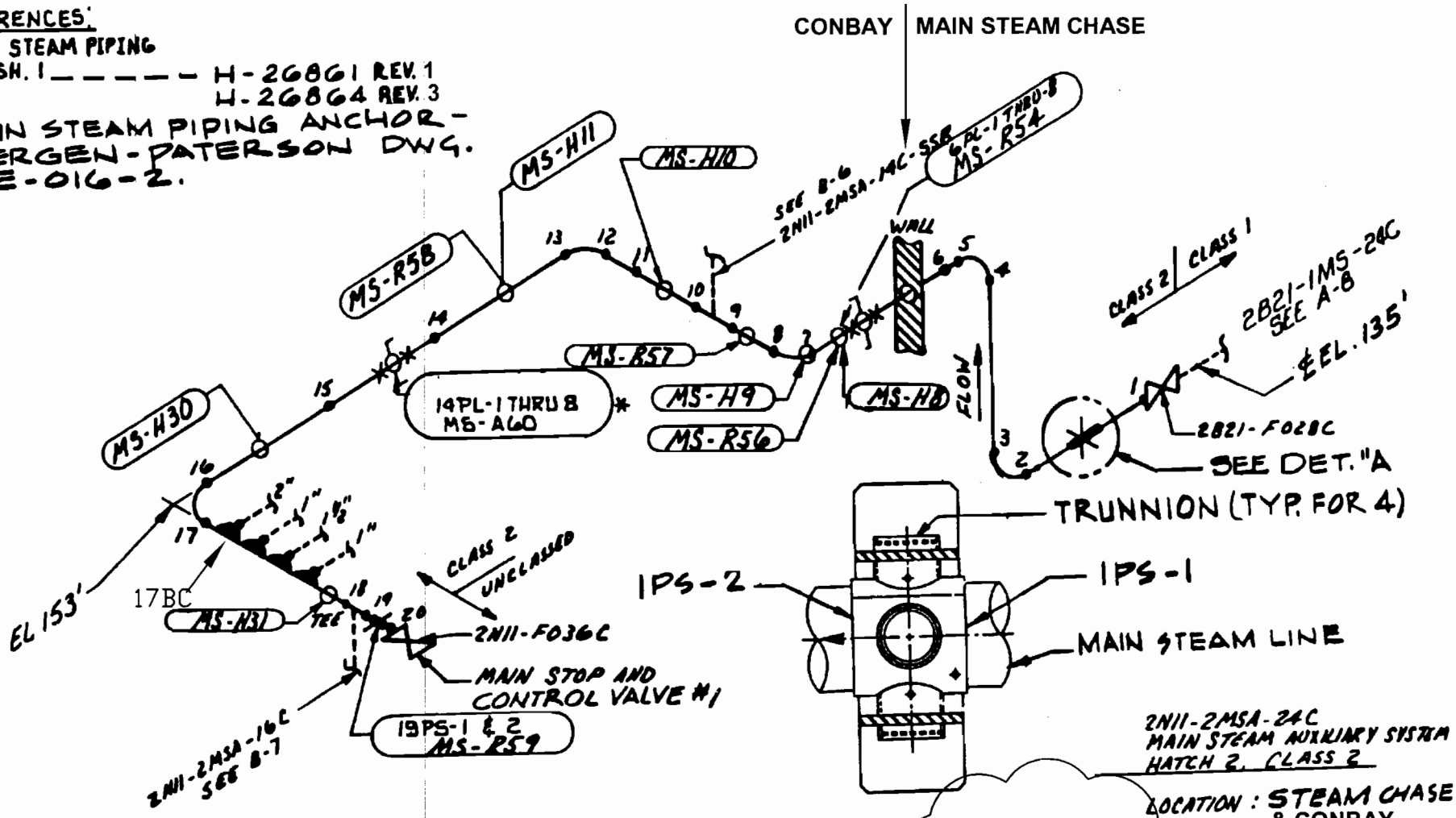

NOTE:
* HANGER ALSO SHOWN ON FIG'S B-9, B-10 & B-12

FIGURE B-11

8	8-31-06	SM	TCO	DDS
7	9-23-04	TAS	KSJ	DDS
Rev.	Date	By	CHK'D	APP.1

REV	DATE	BY	CHK'D	APPR. 1
7	9-23-04	SM	MB	DDS
6	6-10-91	WGS	WS	WHC
5	11-30-90	WGS	WS	WHC

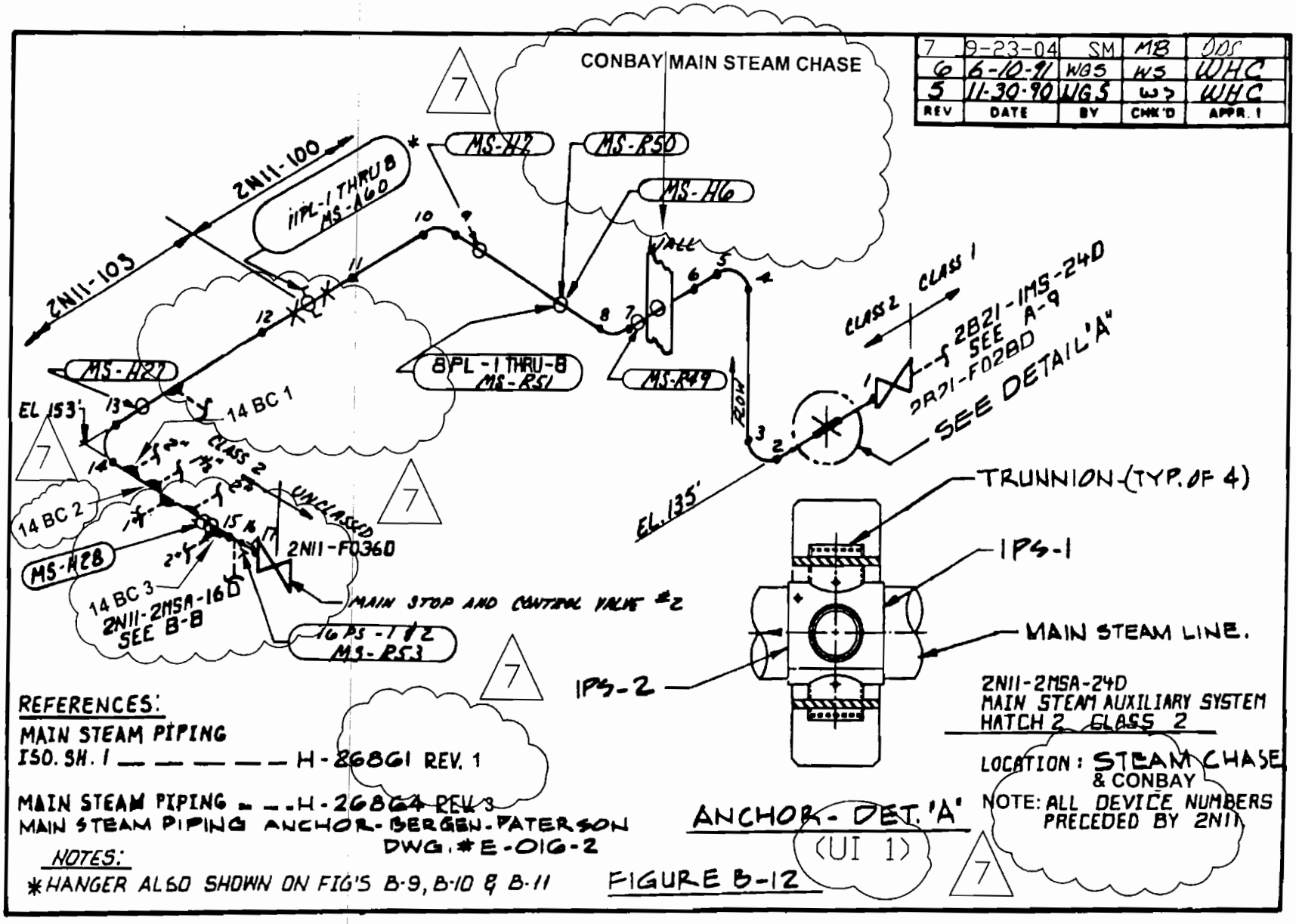

REFERENCES:

MAIN STEAM PIPING
ISO. SH. 1 — — — — — H-26861 REV. 1

MAIN STEAM PIPING — — H-26864 REV. 3
MAIN STEAM PIPING ANCHOR - BERGEN-PATERSON DWG. # E-016-2

NOTES:

*HANGER ALSO SHOWN ON FIG'S B-9, B-10 & B-11

FIGURE B-12

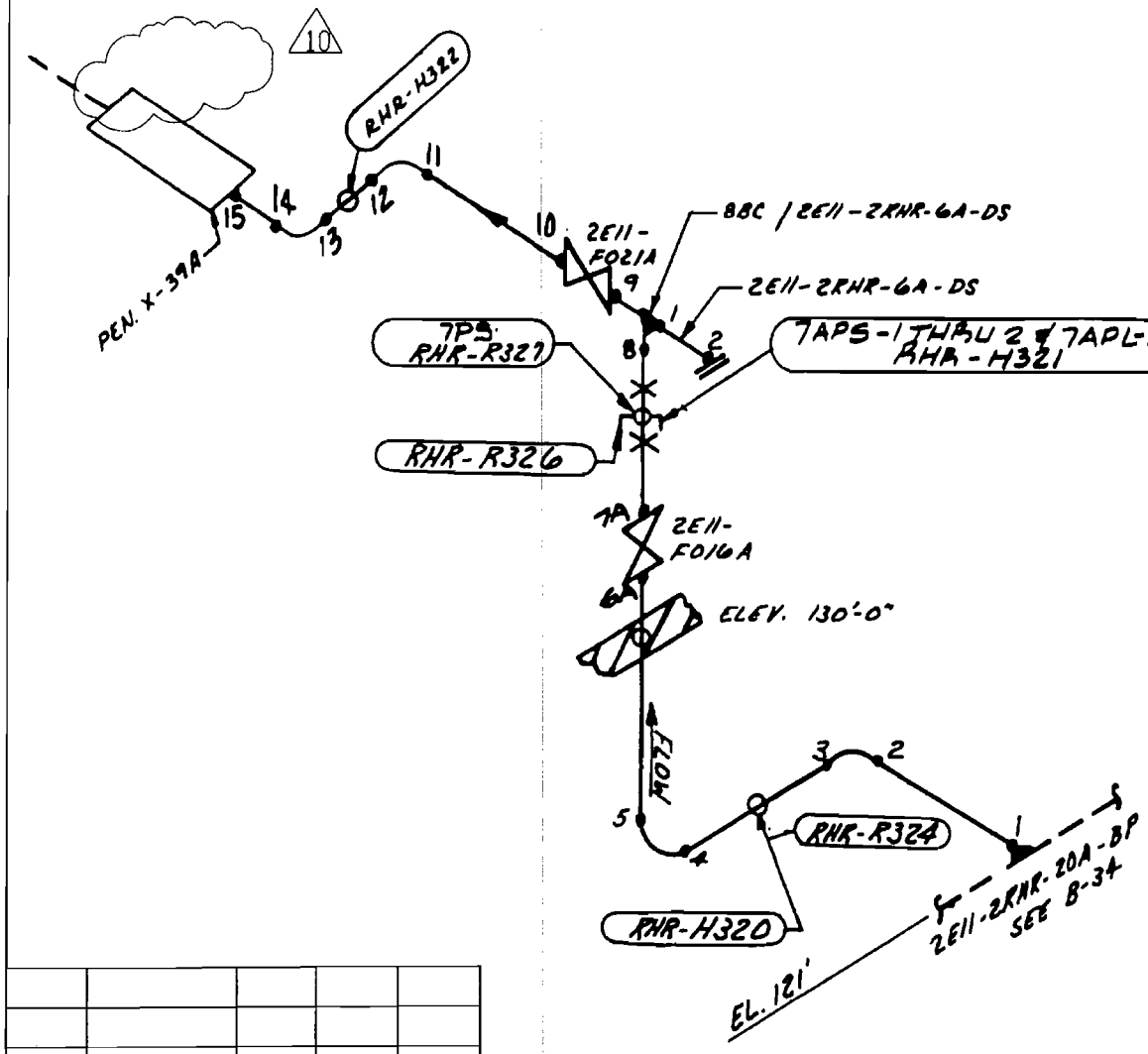

REFERENCES:

R.H.R. SYSTEM-DISCHARGE TO RECIRCULATION HEADER & TEST LINE TO TORUS — H-26821 REV. 6

CONTAINMENT SPRAY- A LOOP
2E11-2RHR-6A-DS
2E11-2RHR-16A-DS
RESIDUAL HEAT REMOVAL SYSTEM
HATCH 2, CLASS 2

LOCATION: ABOVE TORUS AND EAST PENETRATION ROOM

NOTES: 1. ALL DEVICE NUMBERS PRECEDED BY 2E11

10	10-25-04	TAS		ODS
Rev.	Date	By	CHK'D	APP.1

FIGURE B-14

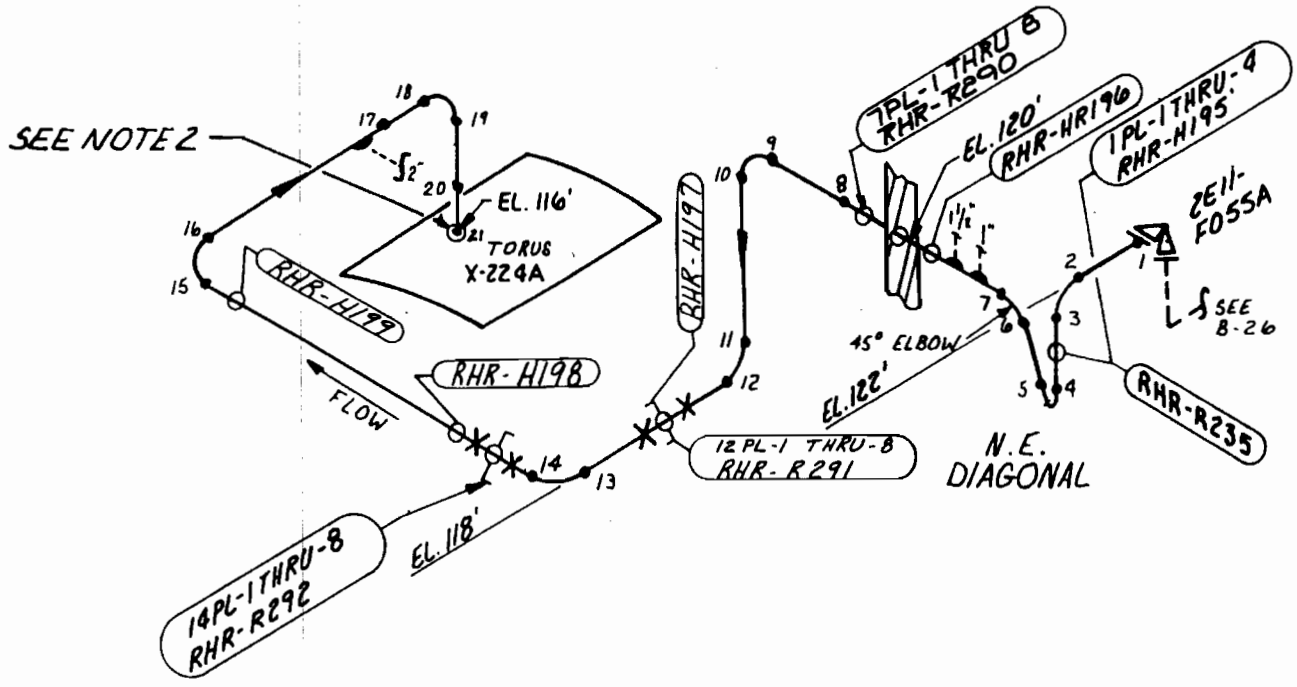

REFERENCES:
R.H.R. SYSTEM RELIEF
VALVE DISCHARGE TO TORUS _ _ H-26824 REV.1

RELIEF VALVE DISCHARGE TO TORUS - LOOP A

2E11-2RHR-6A-RVD
RESIDUAL HEAT REMOVAL
HATCH 2, CLASS 2

LOCATION : ABOVE TORUS AND NORTHEAST DIAGONAL AT 120' LEVEL

NOTE: 1. ALL DEVICE NUMBERS PRECEDED BY 2E11
2. SEE FIG. B-93 FOR DETAILED INFO.

REV	DATE	BY	CHK'D	APPR. 1
4	7/27/90	WS	WC	RLD
3	4-12-91	DST	RKG	(illegible)
5	11-30-90	WGS	WS	WHC

FIGURE B-15

NOTE:

* THIS CAP REPRESENTS THE END OF THE PRESSURE BOUNDRY. THE REMAINING PIPE DOWNSTREAM HAS HAS BEEN ABANDONED AND HAS BEEN RECONNECTED TO THE CAP FOR SUPPORT PURPOSES ONLY.

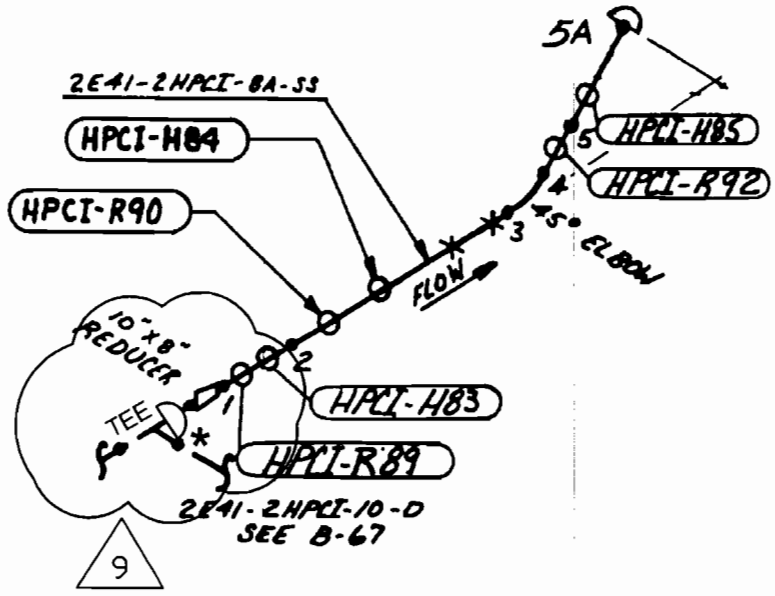

TORUS AREA

REFERENCES:

HPCI SYSTEM-STEAM SUPPLY TO TURBINE & RHR HEAT EXCHANGER __ H-26841 REV 5

9	8-10-06	RAM	766	DDS
8	10-25-04	TAS	SMM	DDS
7	9-24-04	SM	MB	DDS
6	6-24-99	RPW	BKJ	DRG
4	11-30-90	WJGS	WS	WHC
3	4-13-8[illegible]	BST	BKG	CWD
5	1-7-98	WS	[illegible]	WHC
REV.	DATE	BY	CHK'D	APPR. 1

9

STEAM SUPPLY TO RHR

2E41-2HPCI-8A-SS
RESIDUAL HEAT REMOVAL
HIGH PRESSURE COOLANT INJECTION
HATCH 2, CLASS 2

LOCATION: EL. 120' ABOVE TORUS.

NOTE:
ALL DEVICE NUMBERS PRECEDED BY 2E41

FIGURE B-16

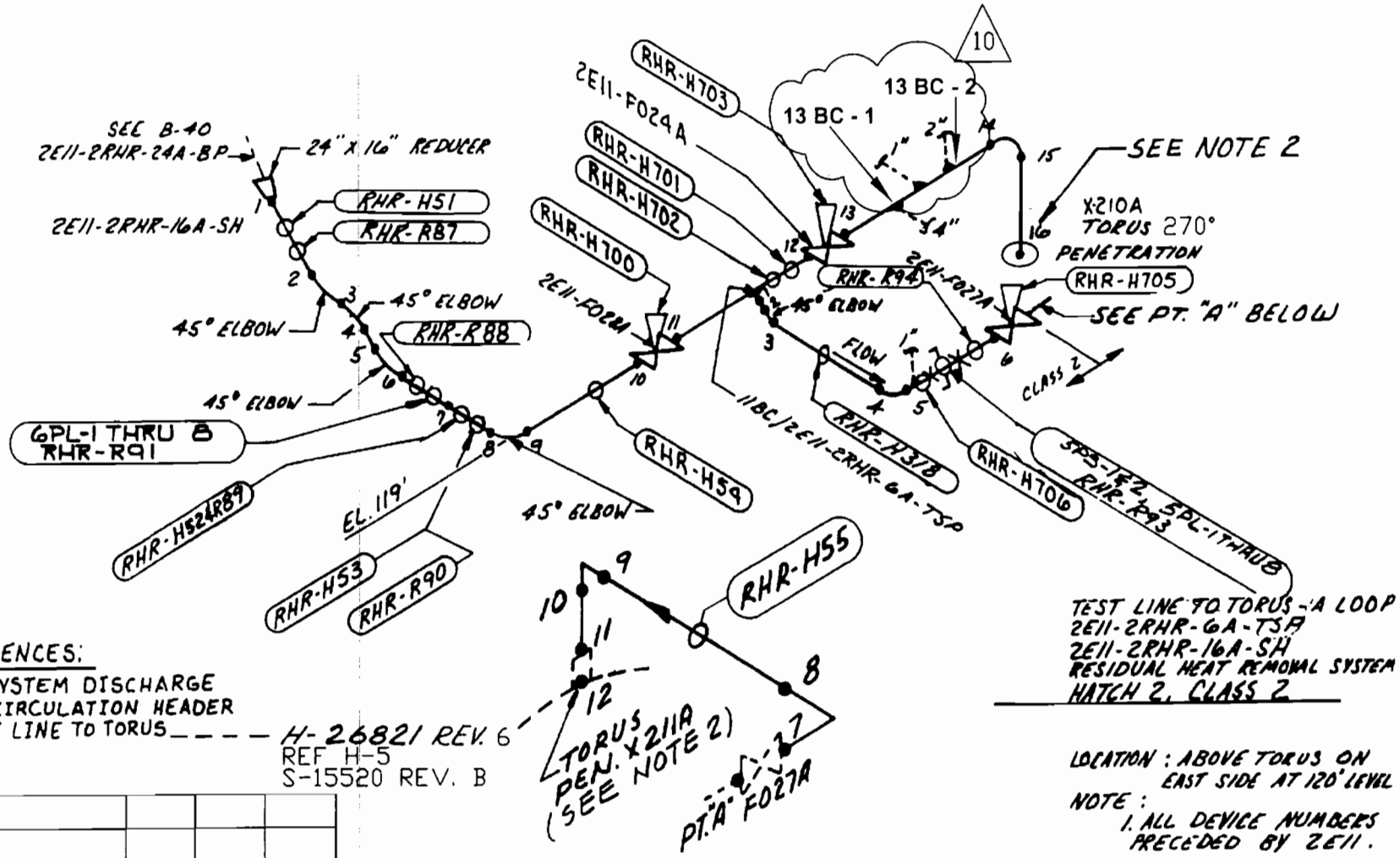

10	10-25-04	TAS	MB	ODS
Rev.	Date	By	CHK'D	APP.1

FIGURE B-17

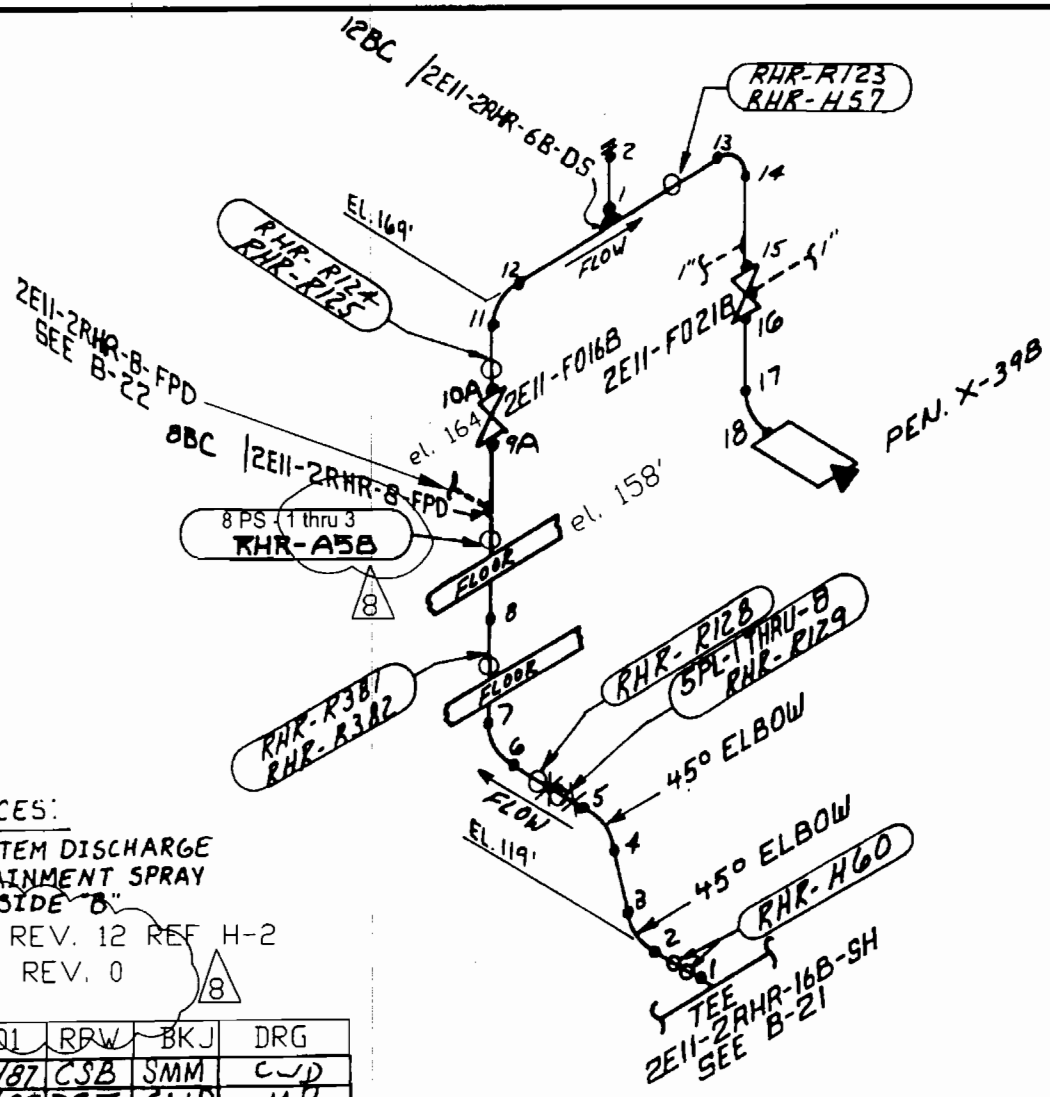

REFERENCES:

R.H.R. SYSTEM DISCHARGE TO CONTAINMENT SPRAY HEADER SIDE "B"

H-26114 REV. 12 REF H-2

H-26827 REV. 0

8

REV	DATE	BY	CHK'D	APPR. 1
7	1-5-01	RPW	BKJ	DRG
5	5/27/87	CSB	SMM	CWD
4	4/3/87	BST	CWD	MB
8	9-24-04	SM	[illegible]	DPS
6	11-30-00	WAS	[illegible]	WHC

FIGURE B-18

CONTAINMENT SPRAY - B LOOP
2E11-2RHR-6B-DS
2E11-2RHR-16B-DS
RESIDUAL HEAT REMOVAL SYSTEM
HATCH 2, CLASS 2

LOCATION: ABOVE TORUS
S.E AREA AND
R.W.C.U. HEAT EXCHANGER ROOM

NOTES: 1. ALL DEVICE NUMBERS PRECEDED BY 2E11.

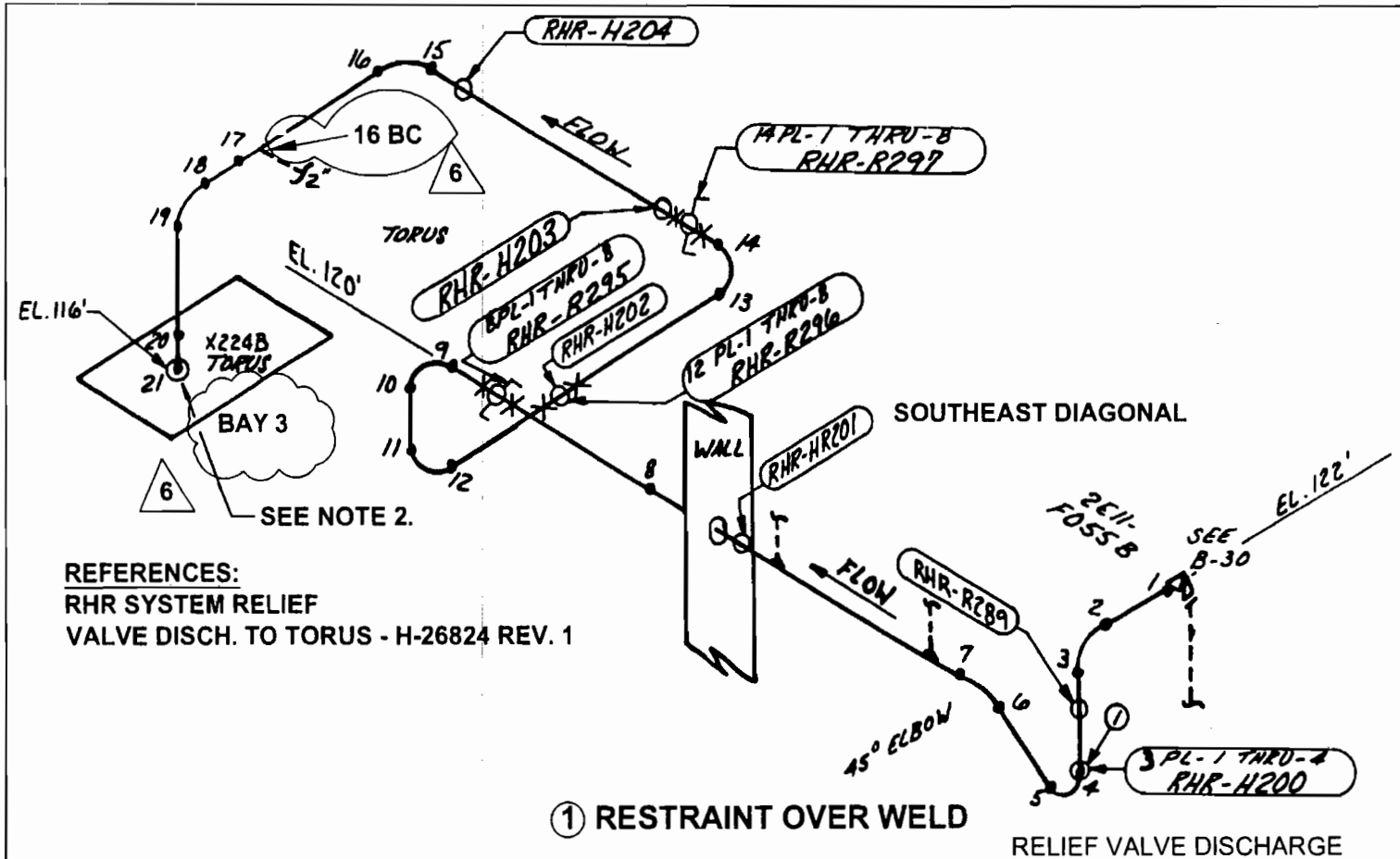

REFERENCES:
RHR SYSTEM RELIEF
VALVE DISCH. TO TORUS - H-26824 REV. 1

① RESTRAINT OVER WELD

RELIEF VALVE DISCHARGE
TO TORUS- B LOOP
2E11-2RHR 6B-RVD
RESIDUAL HEAT REMOVAL SYSTEM
HATCH 2, CLASS 2
LOCATION: SOUTHEAST DIAG. & TORUS
NOTES:
1. ALL DEVICE NUMBERS PRECEDED BY 2E11.
2. FOR DETAILED INFORMATION SEE FIGURE B-93

Rev.	Date	By	CHK'D	APP.1
6	10-13-04	TAS	[illegible]	DDS

FIGURE B-19

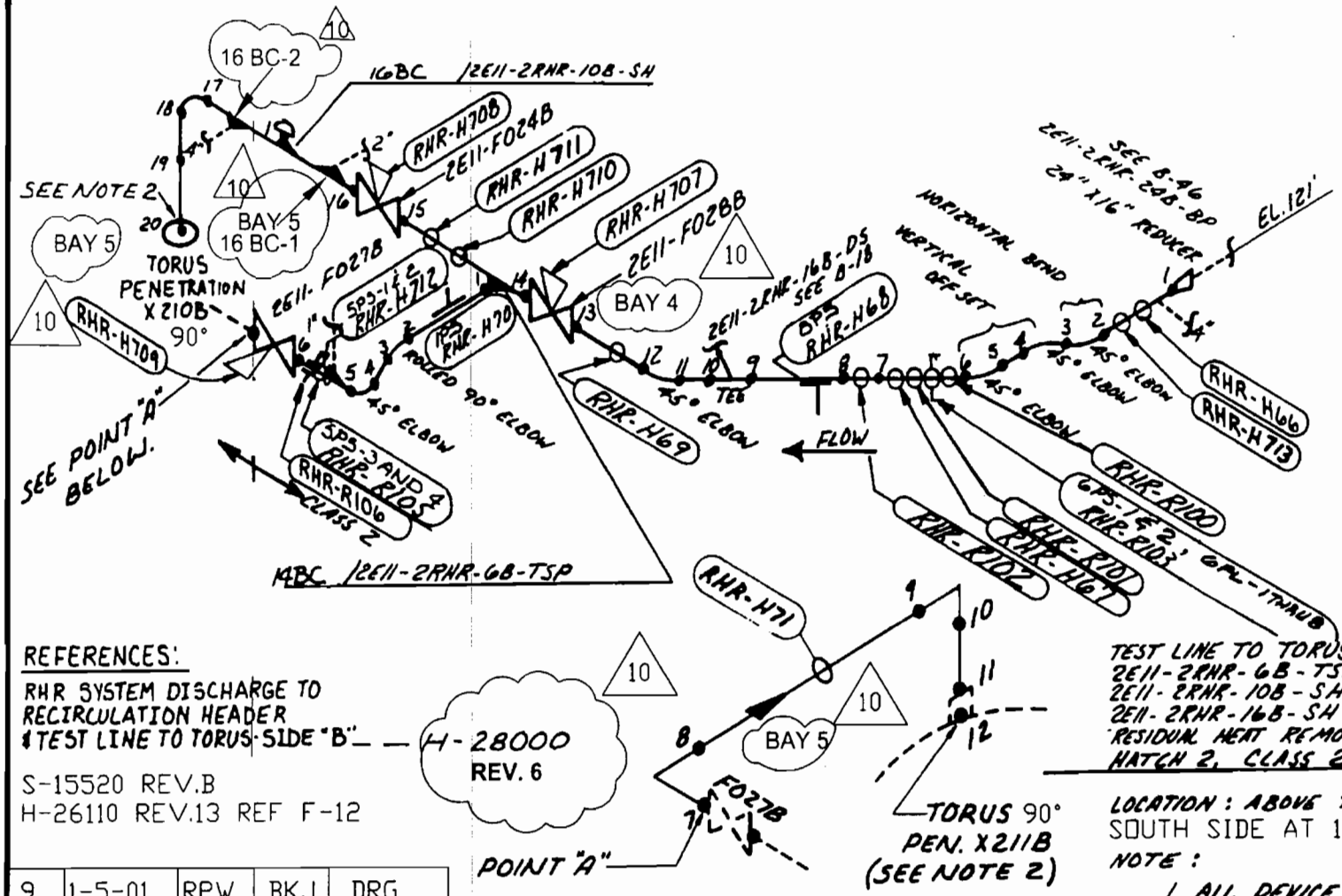

REFERENCES:

RHR SYSTEM DISCHARGE TO RECIRCULATION HEADER & TEST LINE TO TORUS-SIDE "B"

S-15520 REV.B
H-26110 REV.13 REF F-12

TEST LINE TO TORUS - B LOOP
2E11-2RHR-6B-TSP
2E11-2RHR-10B-SH
2E11-2RHR-16B-SH
RESIDUAL HEAT REMOVAL SYSTEM
HATCH 2, CLASS 2

LOCATION: ABOVE THE TORUS
SOUTH SIDE AT 120' LEVEL

NOTE:

1. ALL DEVICE NUMBERS PRECEDED BY 2E11
2. FOR DETAILED INFO. SEE FIGURE B-93

REV.	DATE	BY	CHK'D	APPR. 1
9	1-5-01	RPW	BKJ	DRG
8	6-24-99	RPW	BKJ	DRG
10	9-24-04	SM	[illegible]	DDS
7	10-1-92	[illegible]	WC	[illegible]
6	11-30-90	WGS	[illegible]	WHC

FIGURE B-21

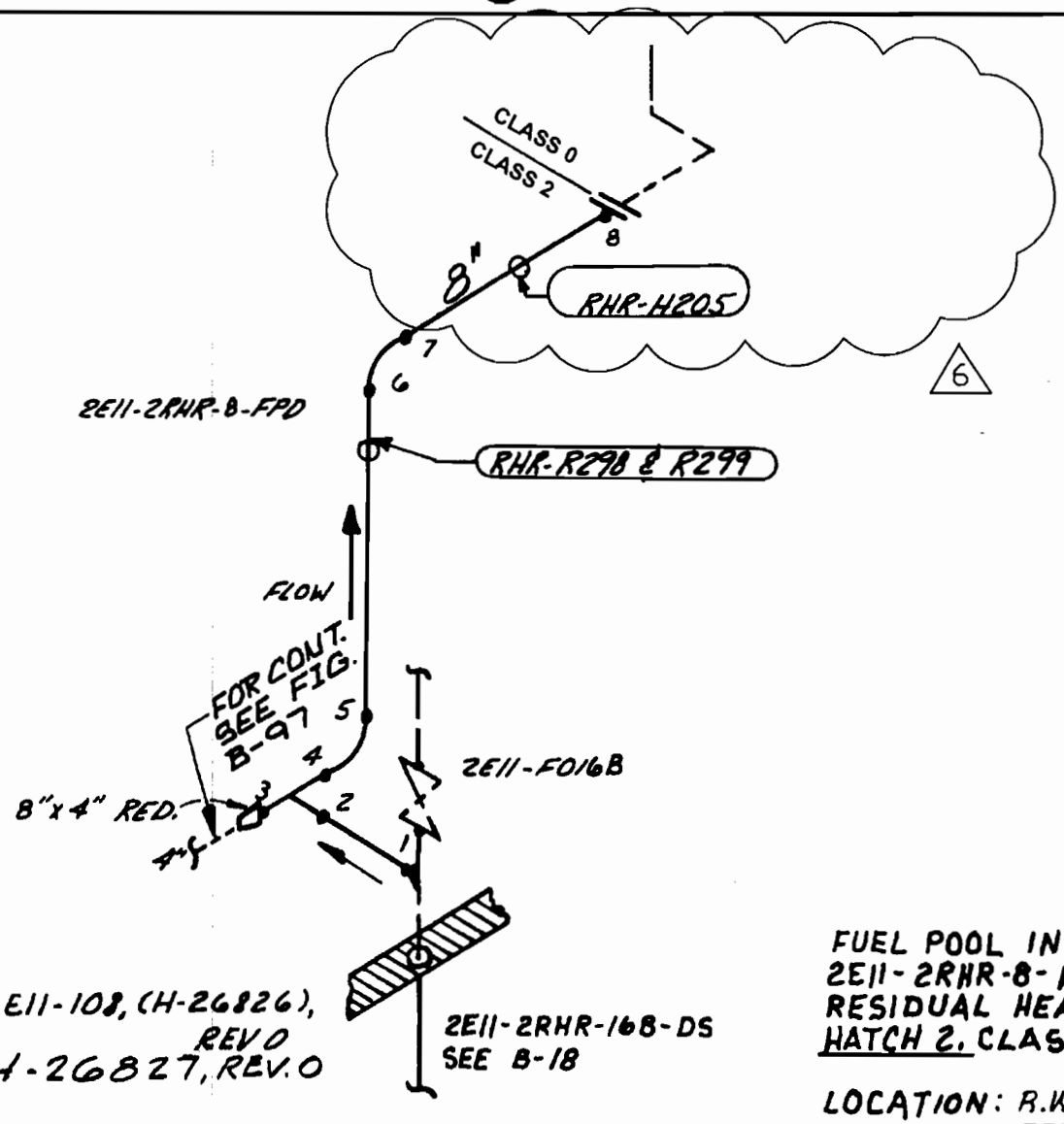

REFERENCES:

RHR SYSTEM 4" DISCH.
TO R.P.V. HEAD SPRAY - - - - 2E11-108, (H-26826), REV 0
H-26827, REV. 0

FUEL POOL INTERTIE
2E11-2RHR-8-FPD
RESIDUAL HEAT REMOVAL SYSTEM
HATCH 2, CLASS 2

LOCATION: R.W.C.U. HEAT EXCHANGER ROOM

NOTE: 1) ALL DEVICE NUMBERS PRECEDED BY 2E11

FIGURE 8-22

6	8-31-06	SM	KO	DOS
5	6-10-91	WGS	WS	WHC
Rev.	Date	By	CHK'D	APP.1

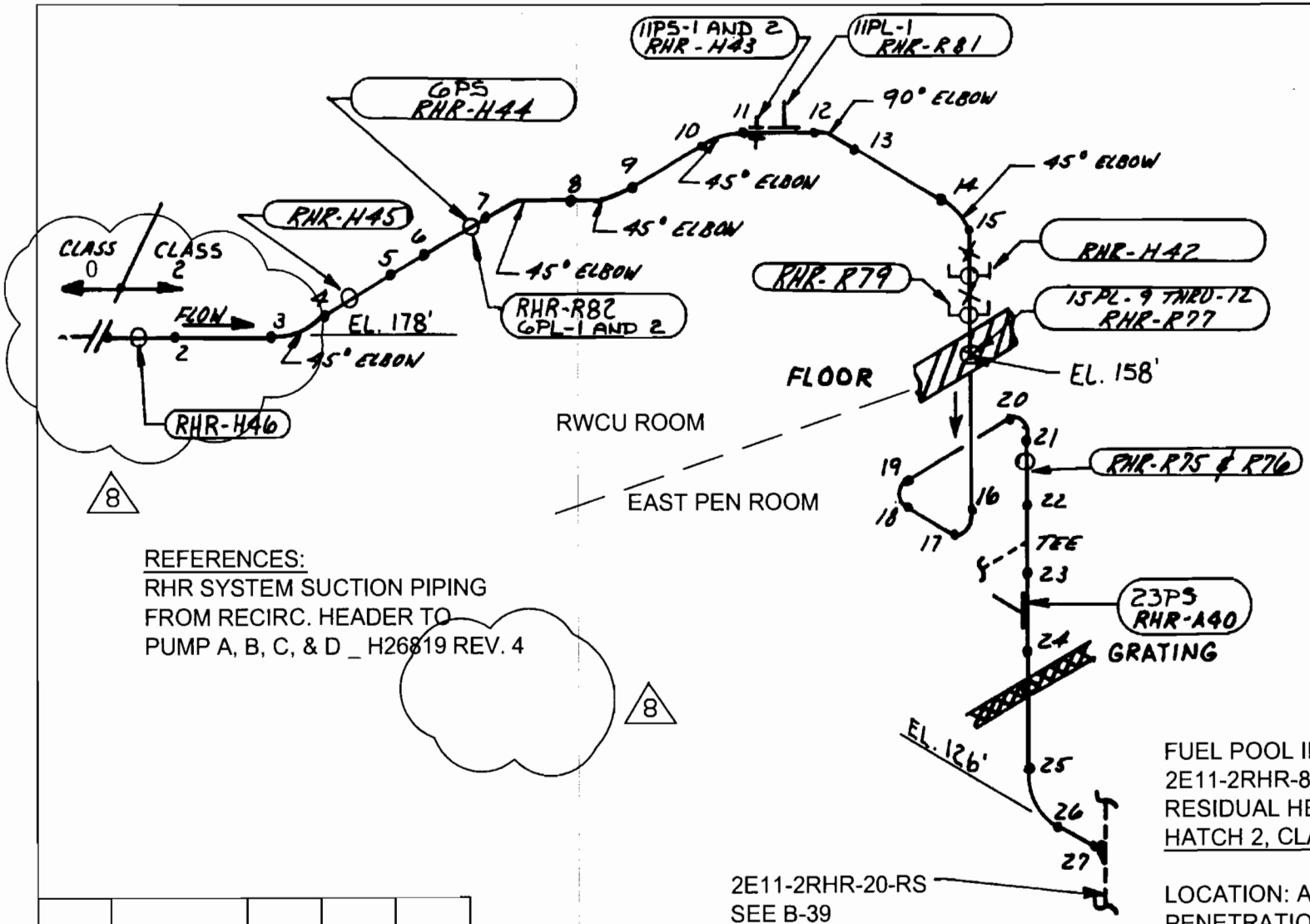

REFERENCES:
RHR SYSTEM SUCTION PIPING
FROM RECIRC. HEADER TO
PUMP A, B, C, & D _ H26819 REV. 4

FUEL POOL INTERTIE
2E11-2RHR-8-FPS
RESIDUAL HEAT REMOVAL SYS.
HATCH 2, CLASS 2

LOCATION: ABOVE TORUS; EAST PENETRATION ROOM; RWCU PUMP AND HEAT EXCHANGER ROOM

NOTES: 1. ALL DEVICE NUMBERS PRECEDED BY 2E11

FIGURE B-23

Rev.	Date	By	CHK'D	APP.1
8	08-16-06	RAM	760	DDS
7	10-20-04	TAS	KSJ	DDS

REFERENCES:

RHR SYSTEM SERVICE WATER SUPPLY TO HEAT EXCHANGER & PUMP DISCHARGE _ _ _ _ _ H-26822 REV. 1

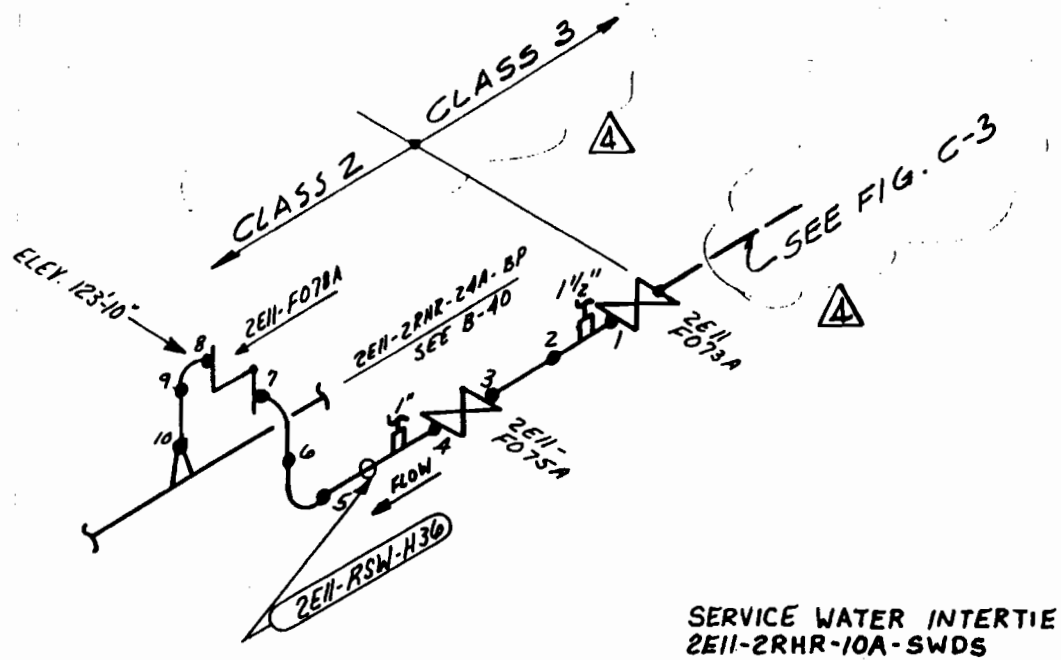

SERVICE WATER INTERTIE
2E11-2RHR-10A-SWDS
RESIDUAL HEAT REMOVAL SYSTEM
HATCH 2 , CLASS 2

LOCATION: ABOVE TORUS EL. 123'-10"

REV.	DATE	BY	CHK'D	APPR. 1
4	6/25/96	WS	KEW	WHC
3	11-30-90	WGS	WS	WHC
2	3/2/87	BST	WS	MB

FIGURE B-24

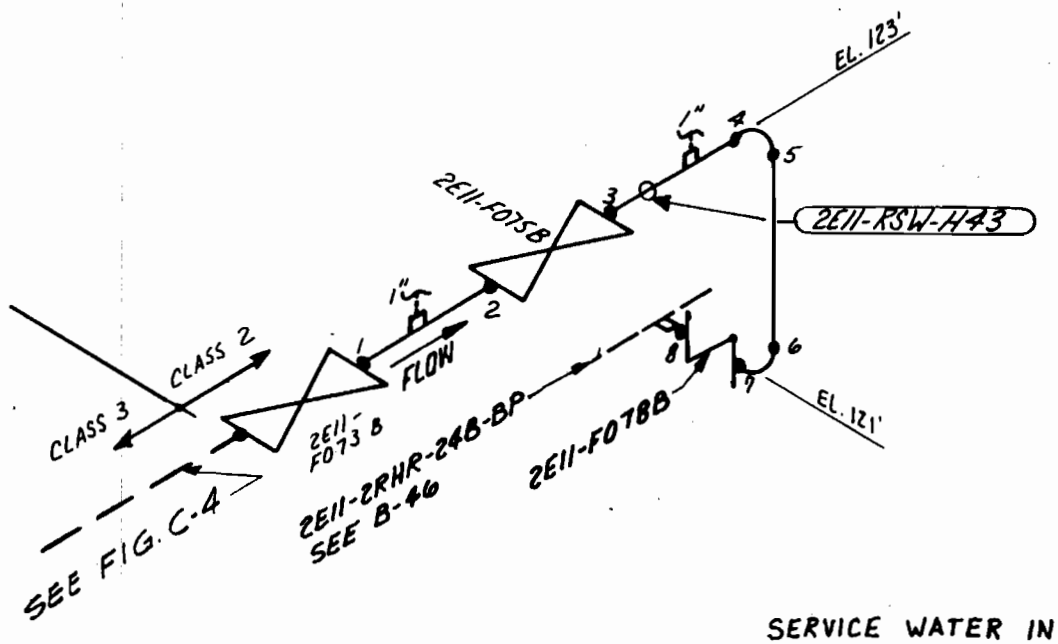

REFERENCES:

RHR SYSTEM SERVICE WATER
SUPPLY TO HEAT EXCHANGER
& PUMP DISCHARGE _ _ _ _ _ _ H-26822 REV. 1

SERVICE WATER INTERTIE
2E11-2RHR-10B-SWDS
RESIDUAL HEAT REMOVAL SYSTEM
HATCH 2, CLASS 2

LOCATION: ABOVE TORUS BY
SE DIAGONAL

REV	DATE	BY	CHK'D	APPR. 1
3	11-30-90	WGS	WS	WHC
2	3/2/87	BST	WS	MB

FIGURE B-25

REV.	DATE	BY	CHK'D	APPR. 1
8	8-16-06	RAM	76	DDS
7	9-27-04	SM	MB	DDS
6	6-24-99	RPW	BKJ	DRG
4	11-30-90	WGS	WS	WHC
3	4/13/87	BKG	BST	CWD
5	4/12/95	WS	KFW	WHC

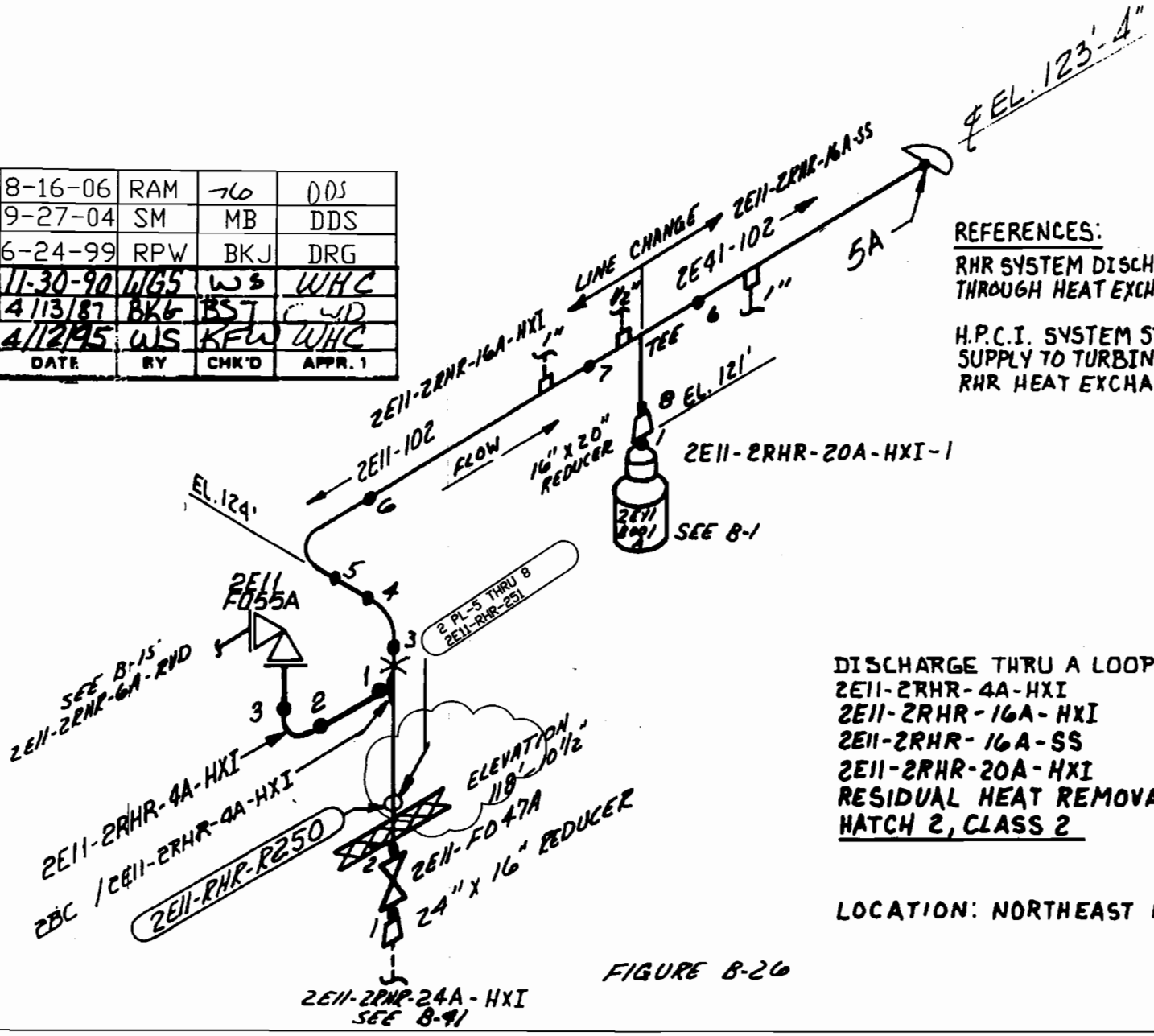

REFERENCES:

RHR SYSTEM DISCHARGE THROUGH HEAT EXCHANGER _ _ H-26820 REV. 1

H.P.C.I. SYSTEM STEAM SUPPLY TO TURBINE & RHR HEAT EXCHANGER _ _ H-26841 REV. 5

8

DISCHARGE THRU A LOOP HX
2E11-2RHR-4A-HXI
2E11-2RHR-16A-HXI
2E11-2RHR-16A-SS
2E11-2RHR-20A-HXI
RESIDUAL HEAT REMOVAL SYSTEM
HATCH 2, CLASS 2

LOCATION: NORTHEAST DIAGONAL

FIGURE B-26

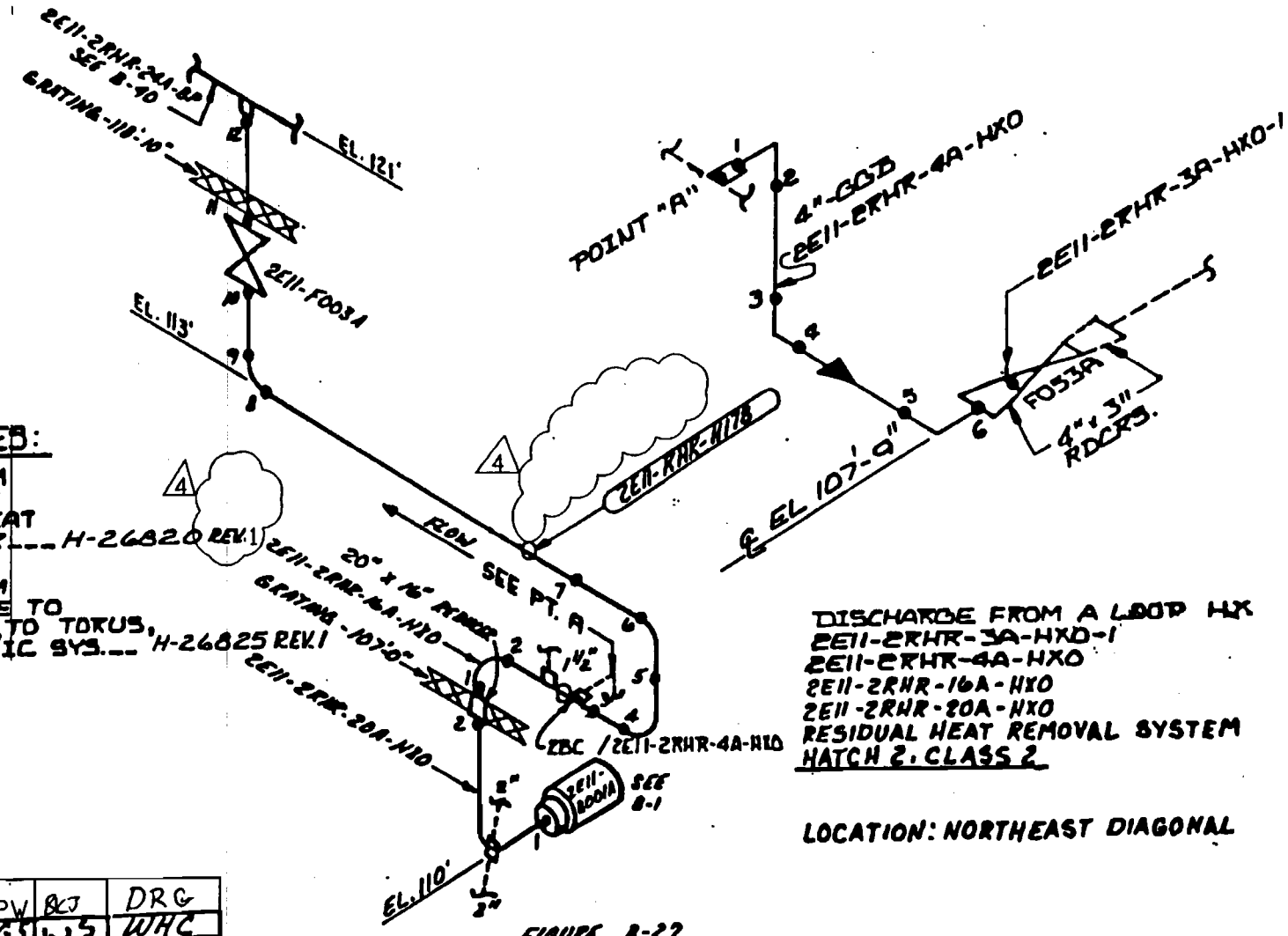

REV	DATE	BY	CHK'D	APPR. 1
4	6-24-99	RPW	RCJ	DRG
3	11-30-90	WGS	WS	WHC
2	4/13/87	BKG	[illegible]	C.L.P.
1	2/26/86	DJT	WS	MH

FIGURE B-27

REFERENCES:

RHR SYSTEM DISCHARGE
THROUGH HEAT EXCHANGER___ H-26820 REV. 1

RHR SYSTEM DRAIN LINES___ H-26828 REV. 0

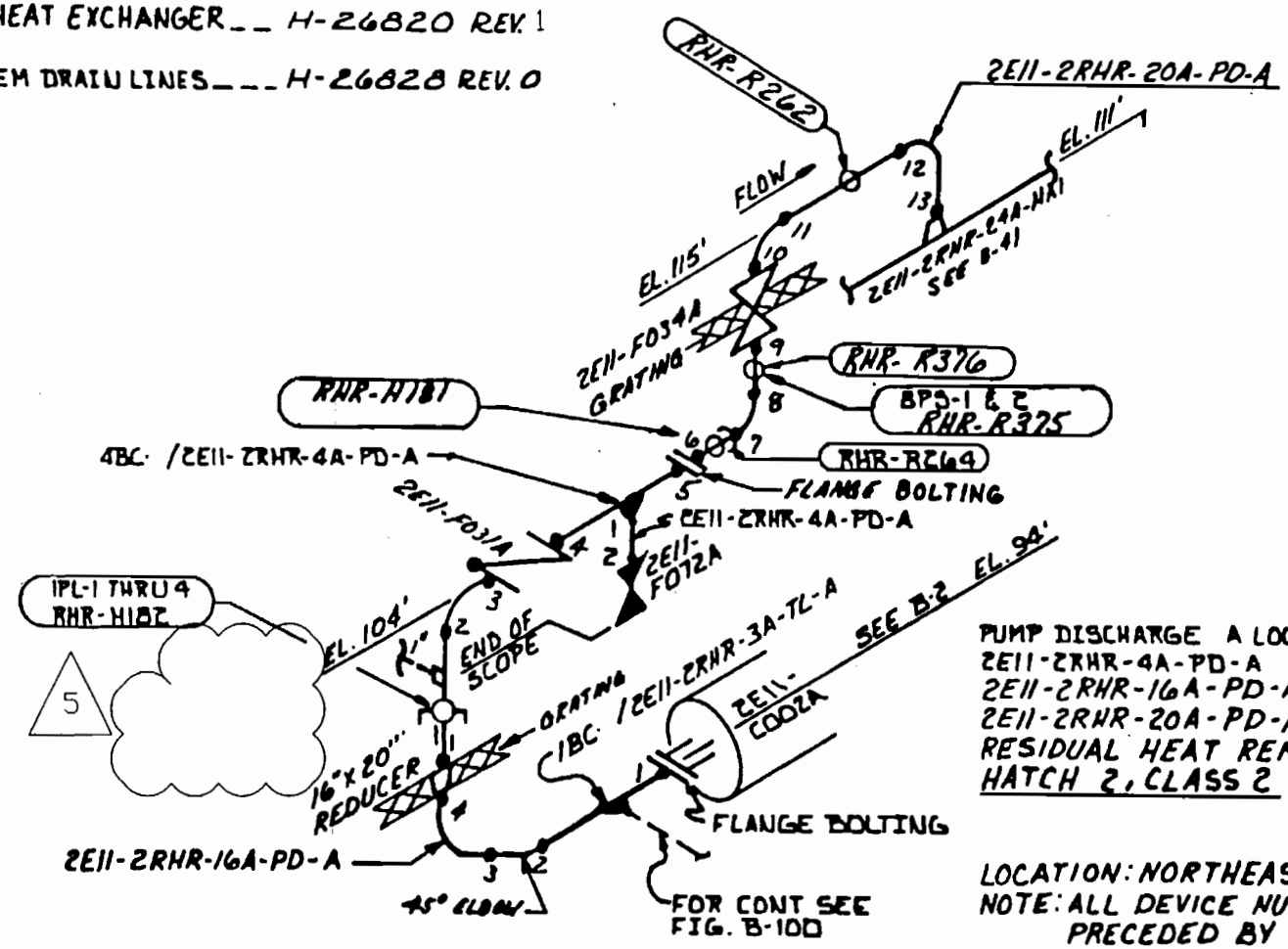

PUMP DISCHARGE A LOOP
2E11-2RHR-4A-PD-A
2E11-2RHR-16A-PD-A
2E11-2RHR-20A-PD-A
RESIDUAL HEAT REMOVAL SYSTEM
HATCH 2, CLASS 2

LOCATION: NORTHEAST DIAGONAL
NOTE: ALL DEVICE NUMBERS PRECEDED BY 2E11

FIGURE B-2B

5	9-27-04	SM		
REV.	DATE	BY	CHK'D	APPR. 1

REFERENCES:

RHR SYSTEM DISCHARGE THROUGH HEAT EXCHANGER___ H-26820 REV. 1

RHR SYSTEM DRAIN LINES___ H-26828 REV. 0

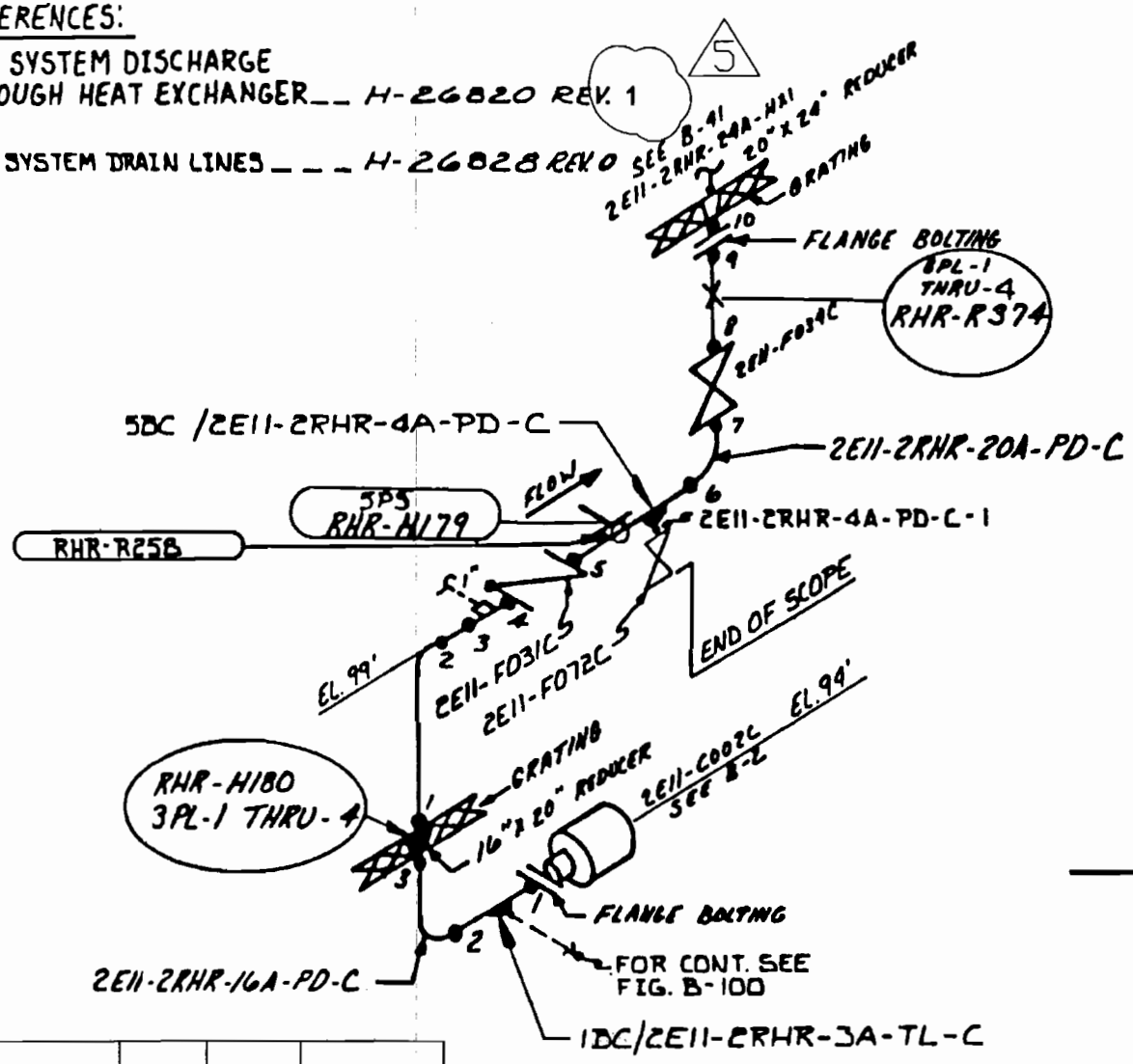

FIGURE B-29

PUMP DISCHARGE - C LOOP
2E11-2RHR-4A-PD-C
2E11-2RHR-16A-PD-C
2E11-2RHR-20A-PD-C
RESIDUAL HEAT REMOVAL SYSTEM
HATCH 2, CLASS 2

LOCATION : NORTHEAST DIAGONAL
NOTE :
ALL DEVICE NUMBERS PRECEDED BY 2E11.

5	9-27-04	SM		DDS
REV.	DATE	BY	CHK'D	APPR. 1

REFERENCES:

RHR SYSTEM DISCHARGE THROUGH HEAT EXCHANGER__

H-26820 REV.1 REF E-1
H-26113 REV.11 REF G-4
H-26841 REV.5 REF G-1

9

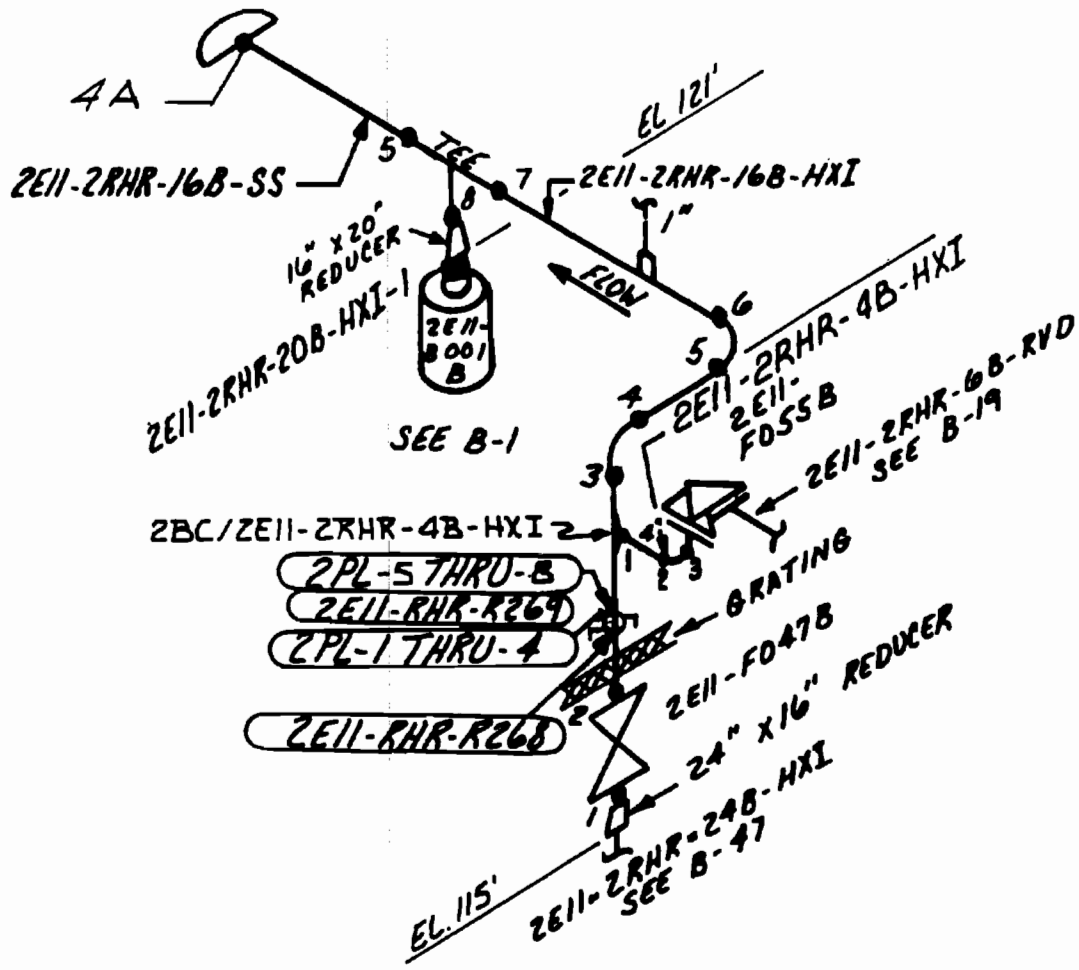

DISCHARGE THRU B LOOP HX
2E11-2RHR-4B-HXI
2E11-2RHR-16B-SS
2E11-2RHR-16B-HXI
2E11-2RHR-20B-HXI
RESIDUAL HEAT REMOVAL SYSTEM
HATCH 2, CLASS 2

LOCATION : SOUTHEAST DIAGONAL

9	8-10-06	RAM	TCB	DDS
8	9-27-04	SM	KSJ	DDS
REV.	DATE	BY	CHK'D	APPR. 1

FIGURE B-30

REFERENCES:

RHR SYSTEM DISCHARGE THROUGH HEAT EXCHANGER
H-26820 REV. 1 REF. J-5, H-26825 REV. 1 REF. E-2
H-26113 REV. 1 REF. G-7

RHR SYSTEM CONDENSATE TO TEST LINE, TO TORUS, AND RCIC SYS. H-26825 REV. 1

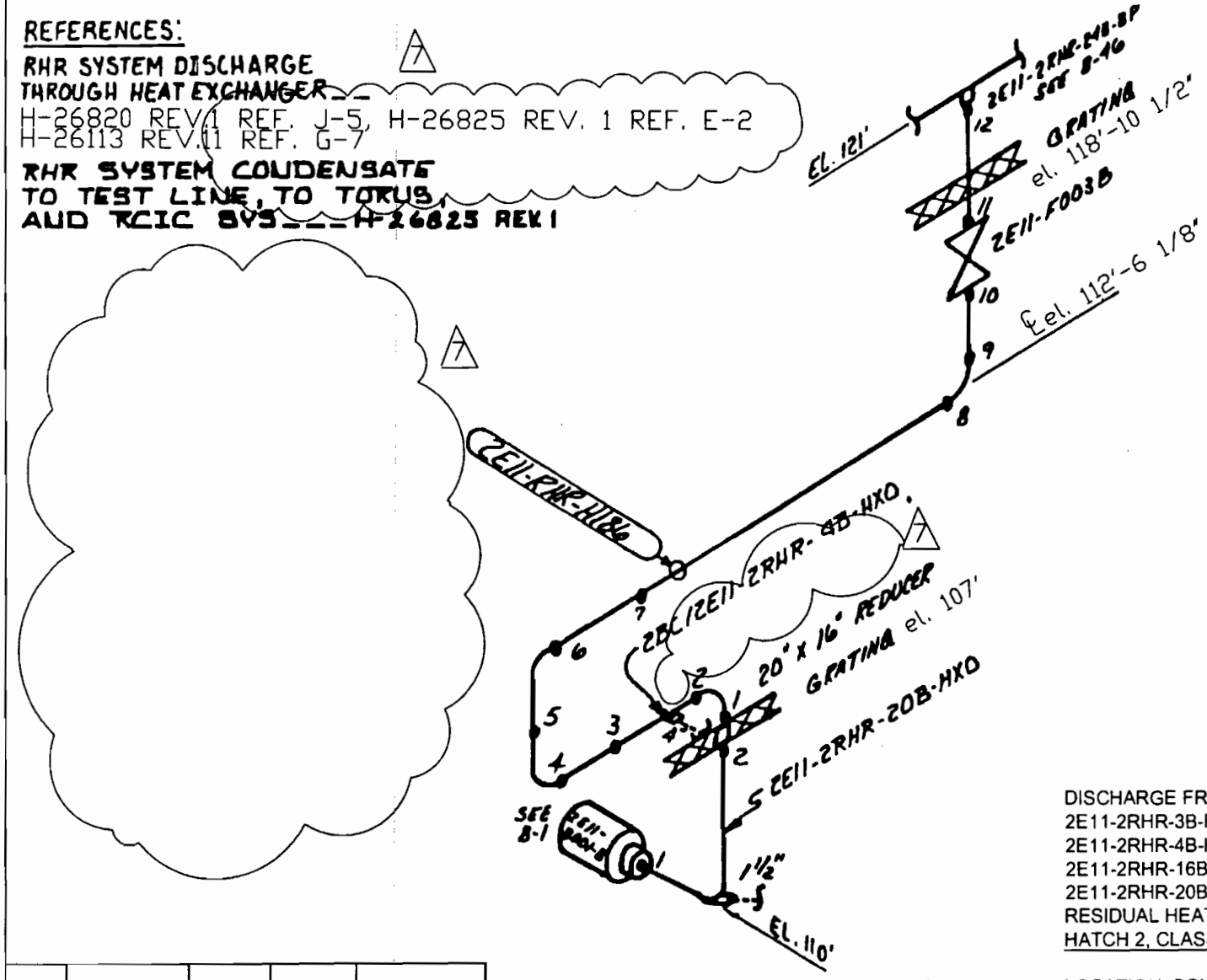

FIGURE B-31

DISCHARGE FROM B LOOP HX
2E11-2RHR-3B-HXO
2E11-2RHR-4B-HXO
2E11-2RHR-16B-HXO
2E11-2RHR-20B-HXO
RESIDUAL HEAT REMOVAL SYSTEM
HATCH 2, CLASS 2

LOCATION: SOUTHEAST DIAGONAL

7	9-27-04	SM	MB	DDS
REV.	DATE	BY	CHK'D	APPR. 1

REFERENCES:

RHR SYSTEM DISCHARGE THROUGH HEAT EXCHANGER__ H-26820 REV 1 REF E-3

RHR SYSTEM DRAIN LINES__ 2E11-112 REV. 1 (H-26830)

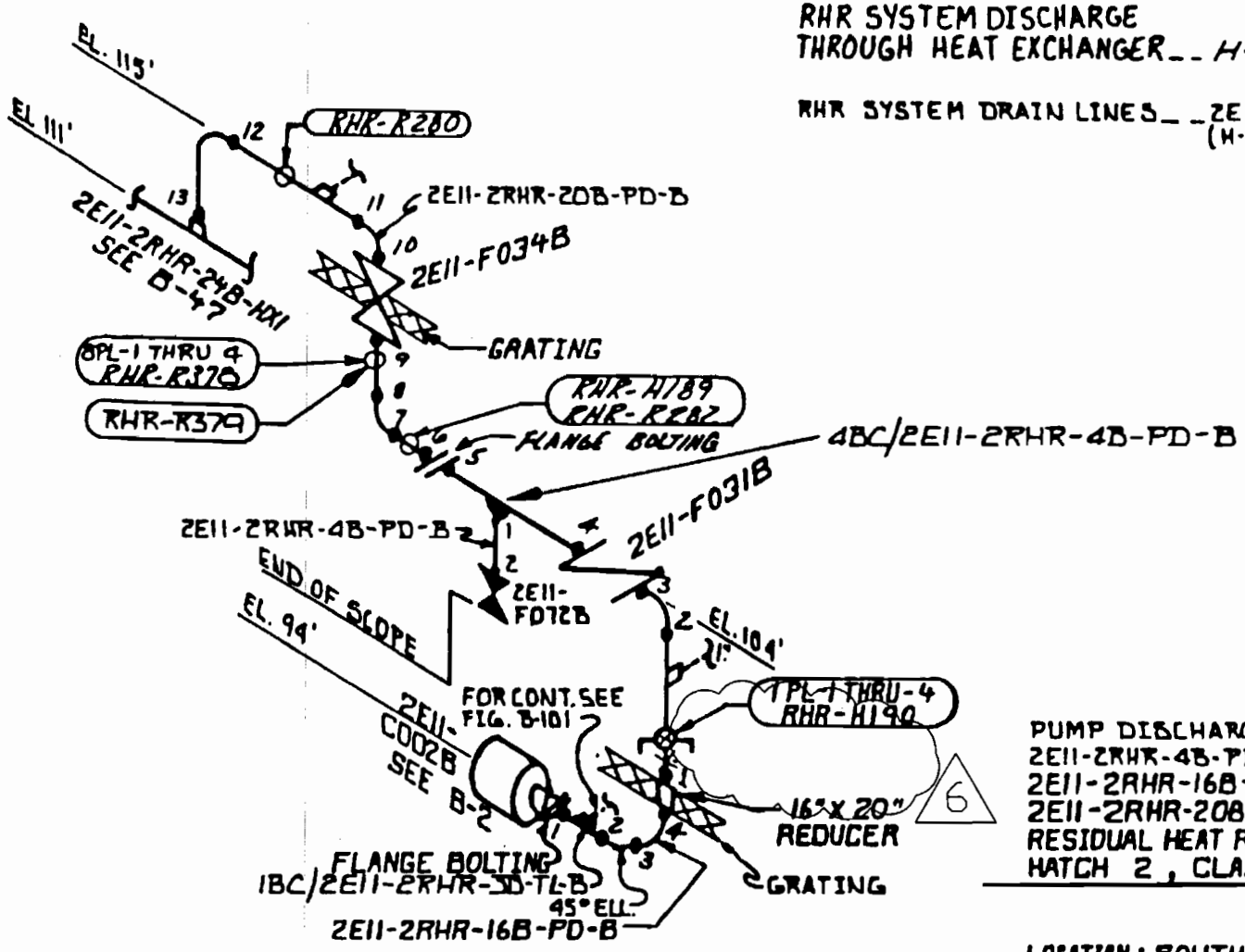

PUMP DISCHARGE-B LOOP
2E11-2RHR-4B-PD-B
2E11-2RHR-16B-PD-B
2E11-2RHR-20B-PD-B
RESIDUAL HEAT REMOVAL SYSTEM
HATCH 2, CLASS 2

LOCATION: SOUTHEAST DIAGONAL

NOTE:
ALL DEVICE NUMBERS PRECEDED BY 2E11

6	9-27-04	SM		
REV.	DATE	BY	CHK'D	APPR. 1

FIGURE B-32

REFERENCES:

RHR SYSTEM DISCHARGE THROUGH HEAT EXCHANGER — H-26820 REV. 1 REF F-3

RHR SYSTEM DRAIN LINES — 2E11-112 REV 1 (H-26830)

H-26113 REV.11 REF H-3

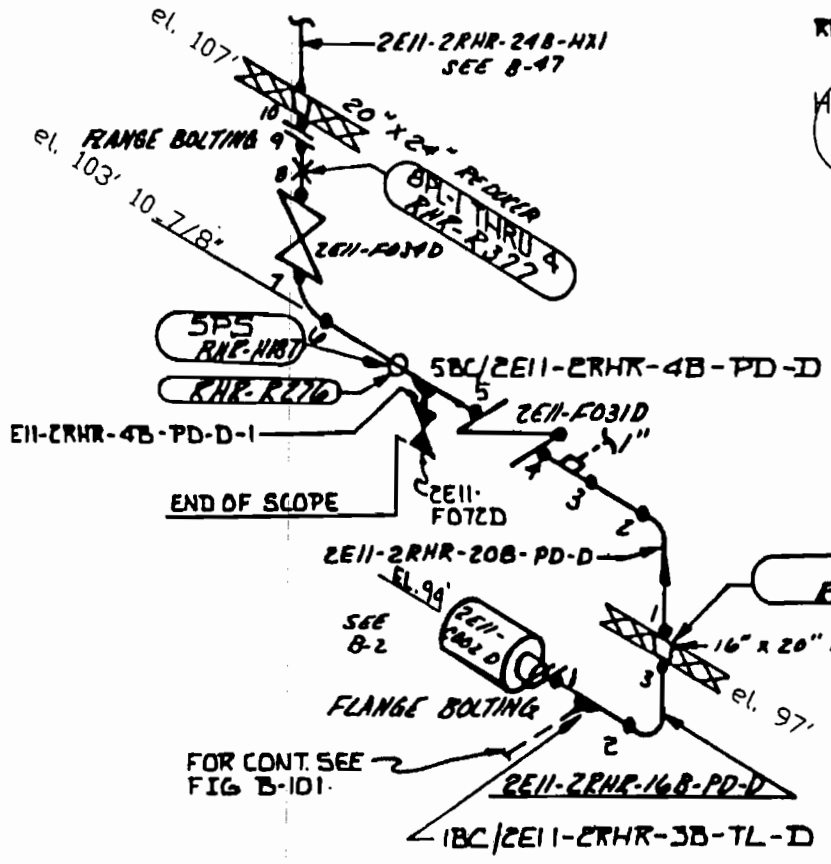

PUMP DISCHARGE - D LOOP
2E11-2RHR-4B-PD-D
2E11-2RHR-16B-PD-D
2E11-2RHR-20B-PD-D
RESIDUAL HEAT REMOVAL SYSTEM
HATCH 2, CLASS 2

LOCATION: SOUTHEAST DIAGONAL
NOTE: ALL DEVICE NUMBERS PRECEDED BY 2E11

FIGURE B-33

7	9-27-04	SM	MB	ODS
REV.	DATE	BY	CHK'D	APPR. 1

8	9-27-04	SM		
REV.	DATE	BY	CHK'D	APPR. 1

REFERENCES:

RHR SYSTEM DISCH. TO RECIRC. HEADER & TEST LINE TO TORUS _ _ _ _ H-26821 REV. 6

RHR SYSTEM DISCH. TO RECIRC. HEADER & TEST LINE TO TORUS-SIDE "B" _ _ _ H-28000 REV. 6

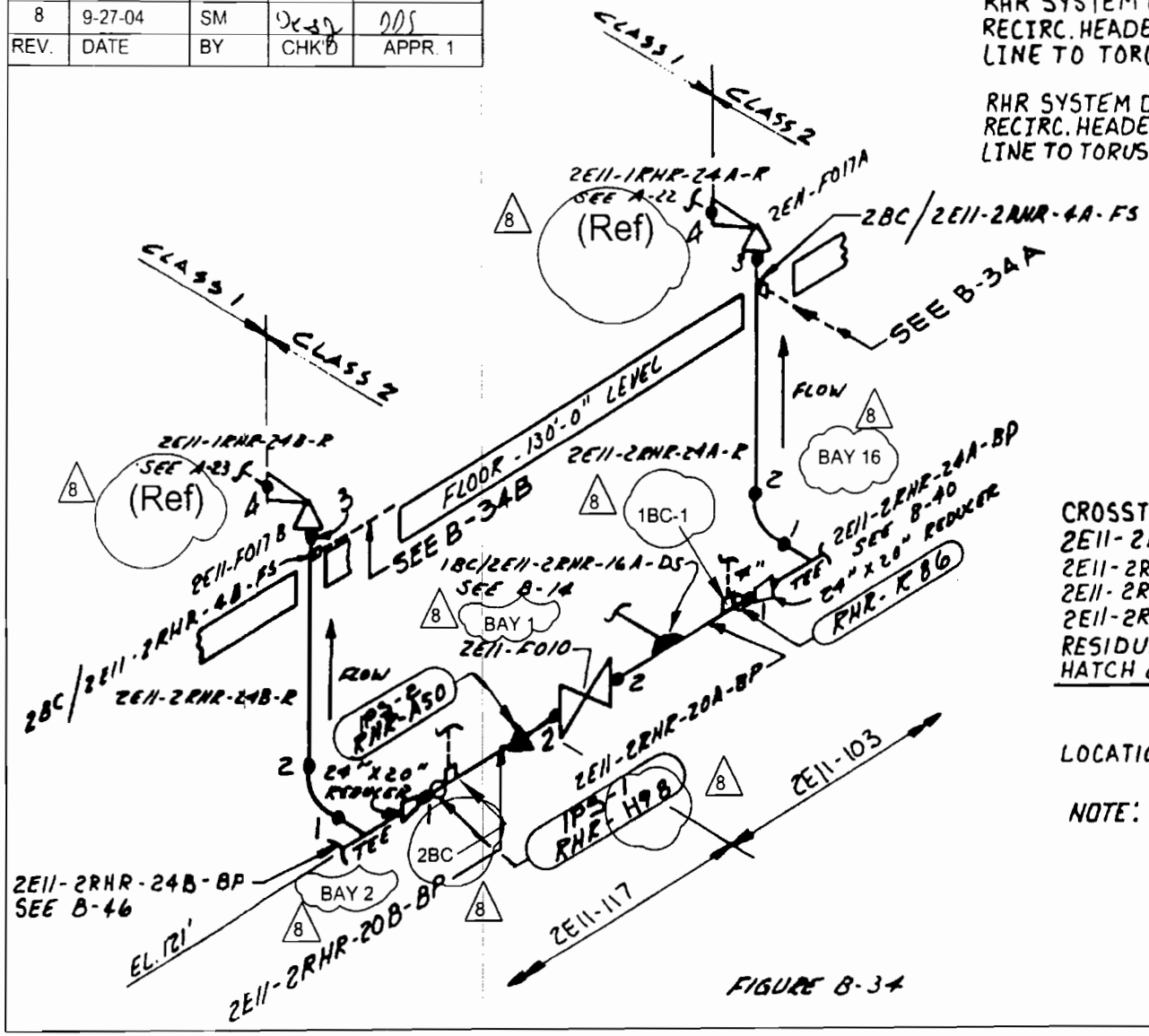

FIGURE B-34

CROSSTIE FOR A & B LOOPS
2E11-2RHR-20A-BP
2E11-2RHR-20B-BP
2E11-2RHR-24A-R
2E11-2RHR-24B-R
RESIDUAL HEAT REMOVAL SYSTEM
HATCH 2, CLASS 2

LOCATION: ABOVE TORUS AND EAST PENETRATION ROOM

NOTE: ALL DEVICE NUMBERS PRECEDED BY 2E11

REFERENCES:

RHR SYSTEM SUCTION PIPING
FROM RECIRC. HEADER TO
PUMPS A,B,C & D — — — — — H-26819 REV. 4

F-3

6

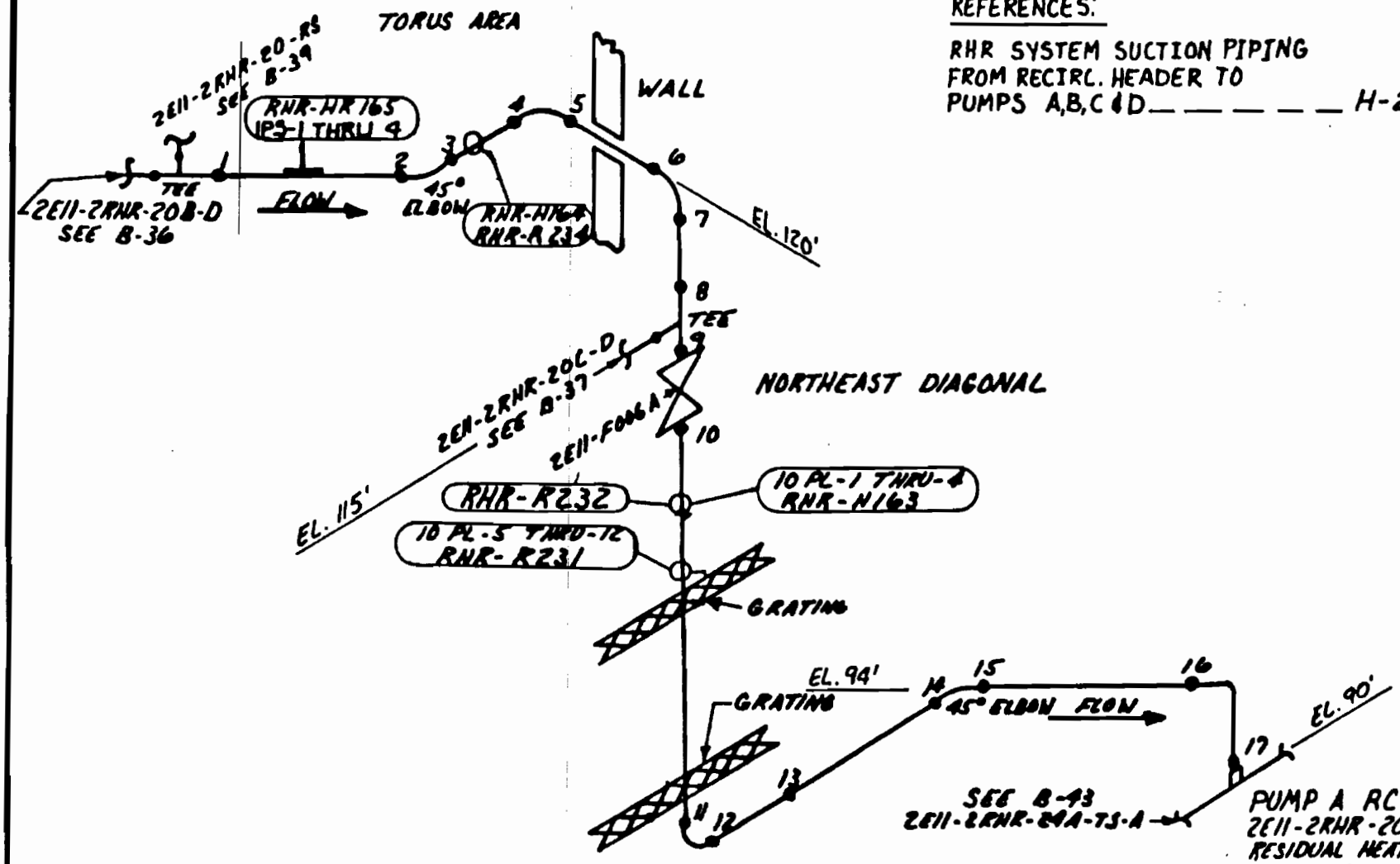

LOCATION: TORUS AND NORTHEAST DIAGONAL

NOTE: ALL DEVICE NUMBERS PRECEDED BY 2E11.

FIGURE B-35

REV.	DATE	BY	CHK'D	APPR. 1
6	8-10-06	RAM	JCO	DDS
5	6-24-99	RPW	BKJ	DRG
4	11-30-90	WGS	WS	WHC
3	4-13-87	BST	BKG	CLD
2	3/2/87	BST	WB	MB

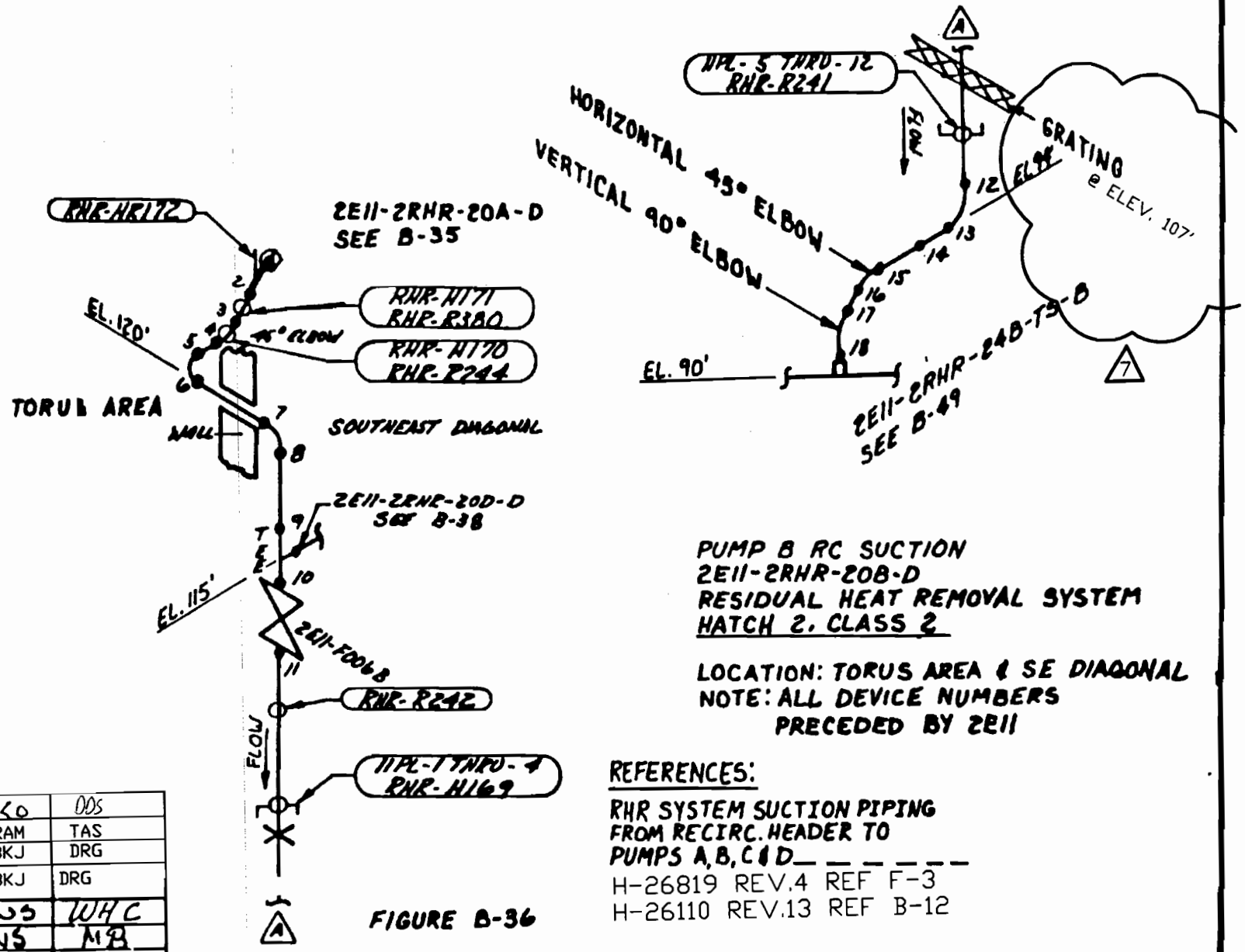

PUMP B RC SUCTION
2E11-2RHR-20B-D
RESIDUAL HEAT REMOVAL SYSTEM
HATCH 2, CLASS 2

LOCATION: TORUS AREA & SE DIAGONAL
NOTE: ALL DEVICE NUMBERS PRECEDED BY 2E11

REFERENCES:

RHR SYSTEM SUCTION PIPING FROM RECIRC. HEADER TO PUMPS A, B, C & D

H-26819 REV.4 REF F-3
H-26110 REV.13 REF B-12

FIGURE B-36

REV	DATE	BY	CHK'D	APPR. 1
7	8-11-06	RAM	7Co	DDS
6	9-27-04	SM	RAM	TAS
5	1-05-01	RPW	BKJ	DRG
4	6-25-99	RPW	BKJ	DRG
3	11-30-90	WGS	WS	WHC
2	3/2/87	DST	WS	MB

REFERENCES:

RHR SYSTEM SUCTION PIPING
FROM RECIRC. HEADER TO
PUMPS A,B,C & D _ _ _ _ _ H-26819 REV 4 △7
H-26113 REV.11 REF B-4

E-5

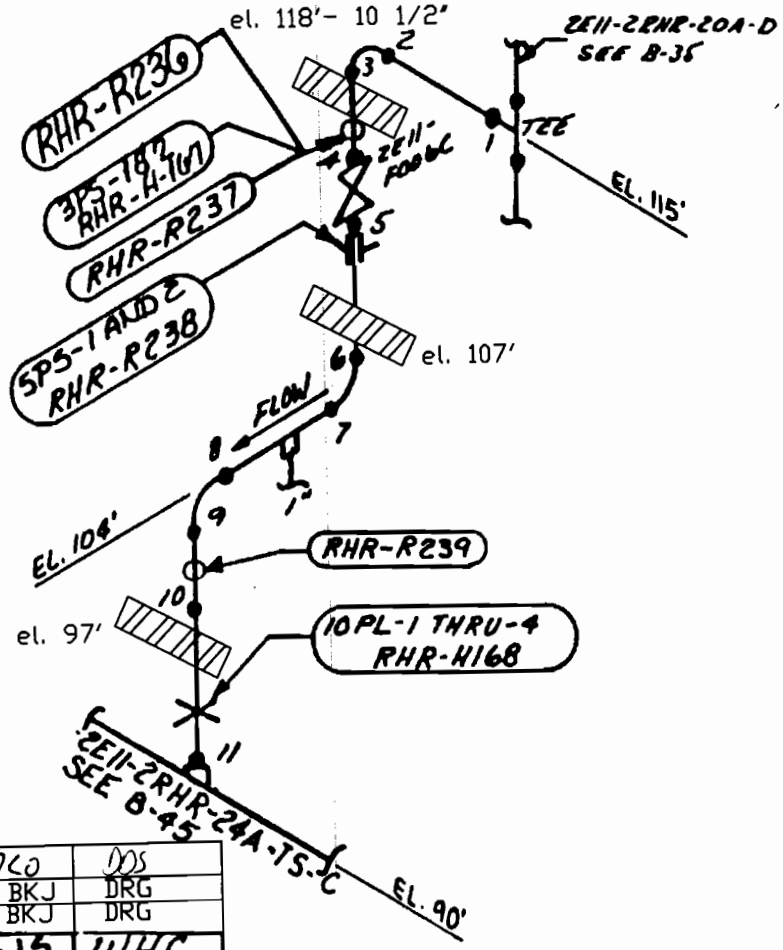

PUMP C RC SUCTION
2E11-2RHR-20C-D
RESIDUAL HEAT REMOVAL SYSTEM
HATCH 2, CLASS 2

LOCATION: NORTHEAST DIAGONAL
NOTE: ALL DEVICE NUMBERS
PRECEDED BY 2E11

FIGURE B-37

REV.	DATE	BY	CHK'D	APPR. 1
7	8-11-06	RAM	7CO	DDS
6	1-05-01	RPW	BKJ	DRG
5	6-25-99	RPW	BKJ	DRG
4	11-30-90	WJGS	WS	WHC
3	4-13-88	BST	BKG	CWD
2	3/2/87	BST	WS	MB

REFERENCES:

RHR SYSTEM SUCTION PIPING
FROM RECIRC. HEADER TO
PUMPS A,B,C,&D _ _ _ _ _ _ H-261119 REV 4

H-261110 REV.13 REF B-10

E-5

7

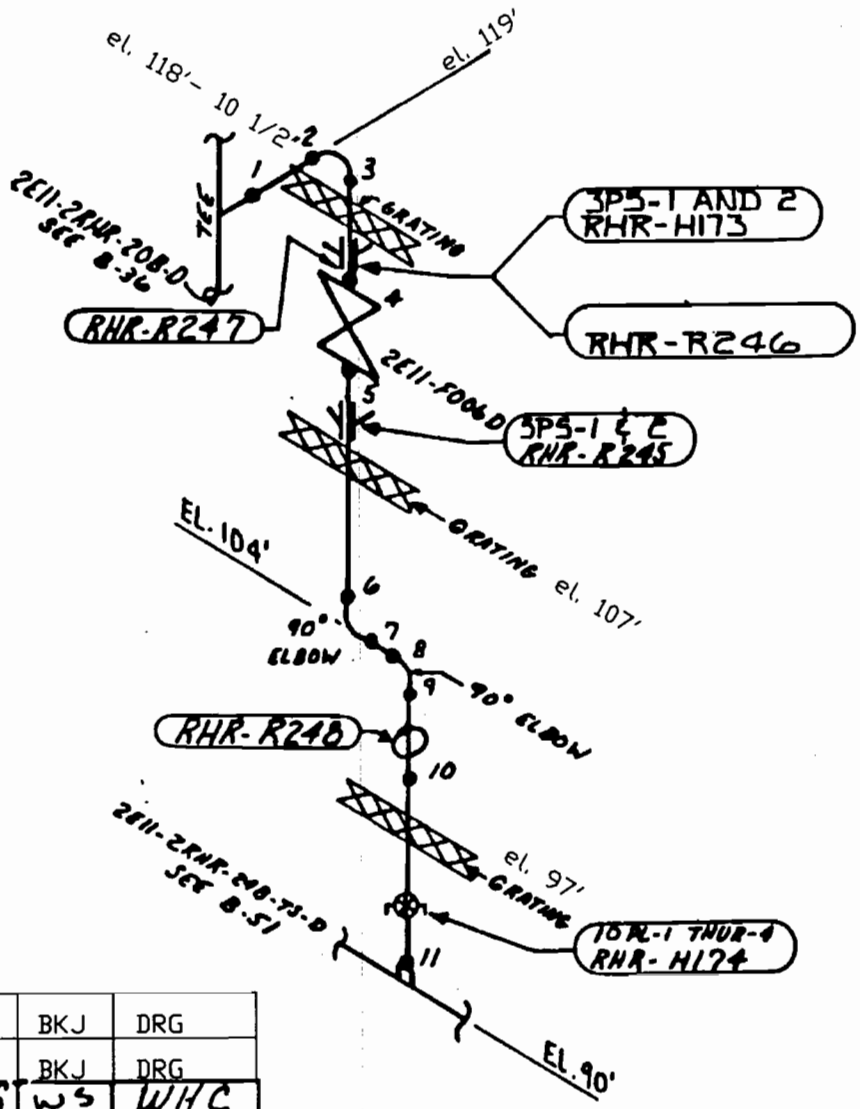

FIGURE B-3B

PUMP D RC SUCTION
2E11-2RHR-20D-D
RESIDUAL HEAT REMOVAL SYSTEM
HATCH 2, CLASS 2

LOCATION : SOUTHEAST DIAGONAL
NOTE :
ALL DEVICE NUMBERS
PRECEDED BY 2E11.

REV.	DATE	BY	CHK'D	APPR. 1
6	1-05-01	RPW	BKJ	DRG
5	6-25-99	RPW	BKJ	DRG
4	11-30-90	WGS	WS	WHC
3	4-13-87	DST	BKG	CWD
7	8-16-06	SM	KG	DDS

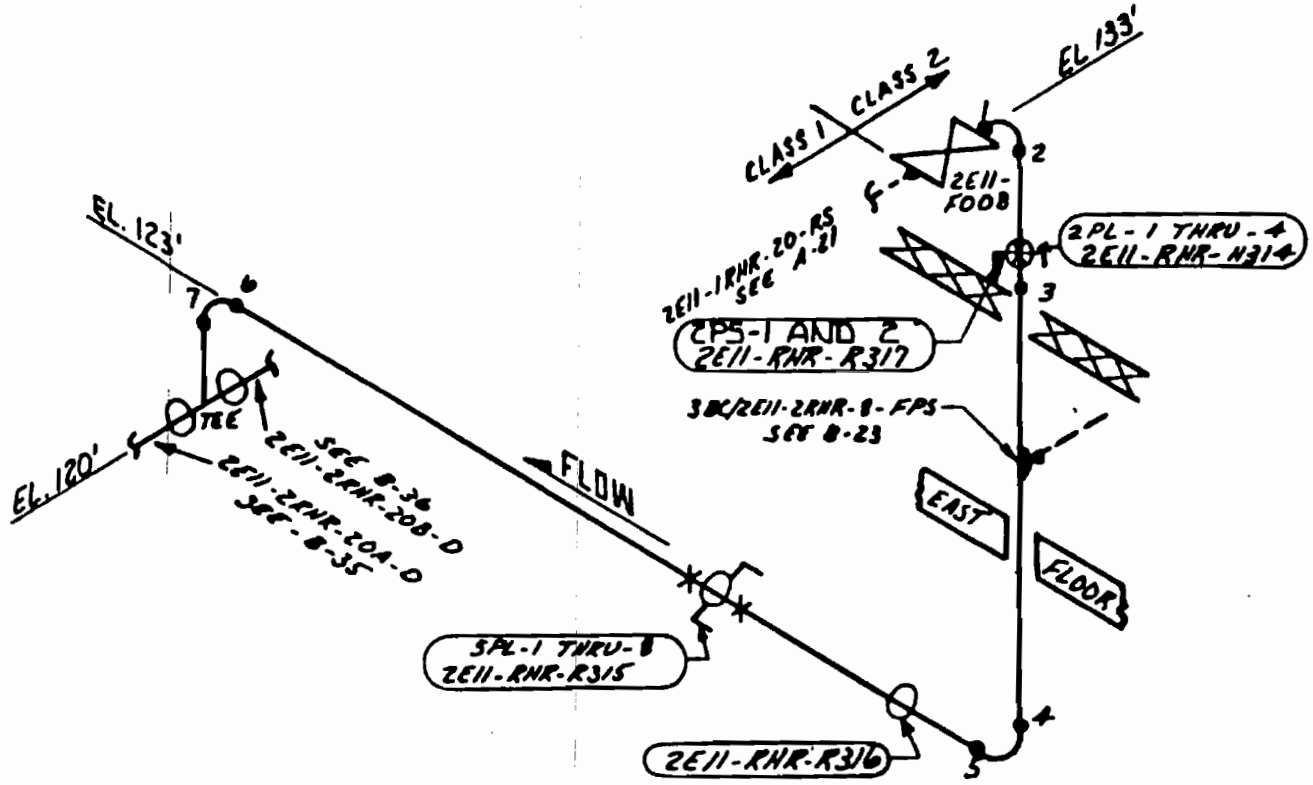

REFERENCES:

RHR SYSTEM SUCTION PIPING FROM RECIRC. HEADER TO PUMPS A,B,C & D — — — — — — H 26819 REV. 4 REF C-8

6

RECIRC. SUCTION
2E11-2RHR-20-RS
RESIDUAL HEAT REMOVAL SYSTEM
HATCH 2, CLASS 2

LOCATION: EAST PENETRATION ROOM AND ABOVE TORUS NEAR SOUTH WALL

REV.	DATE	BY.	CHK'D	APPR. 1
5	6-25-99	RPW	BKJ	DRG
4	11-30-90	WGS	WS	WHC
3	4-13-87	BST	BKG	CWD
6	8-16-06	SM	KU	DDS

FIGURE B-39

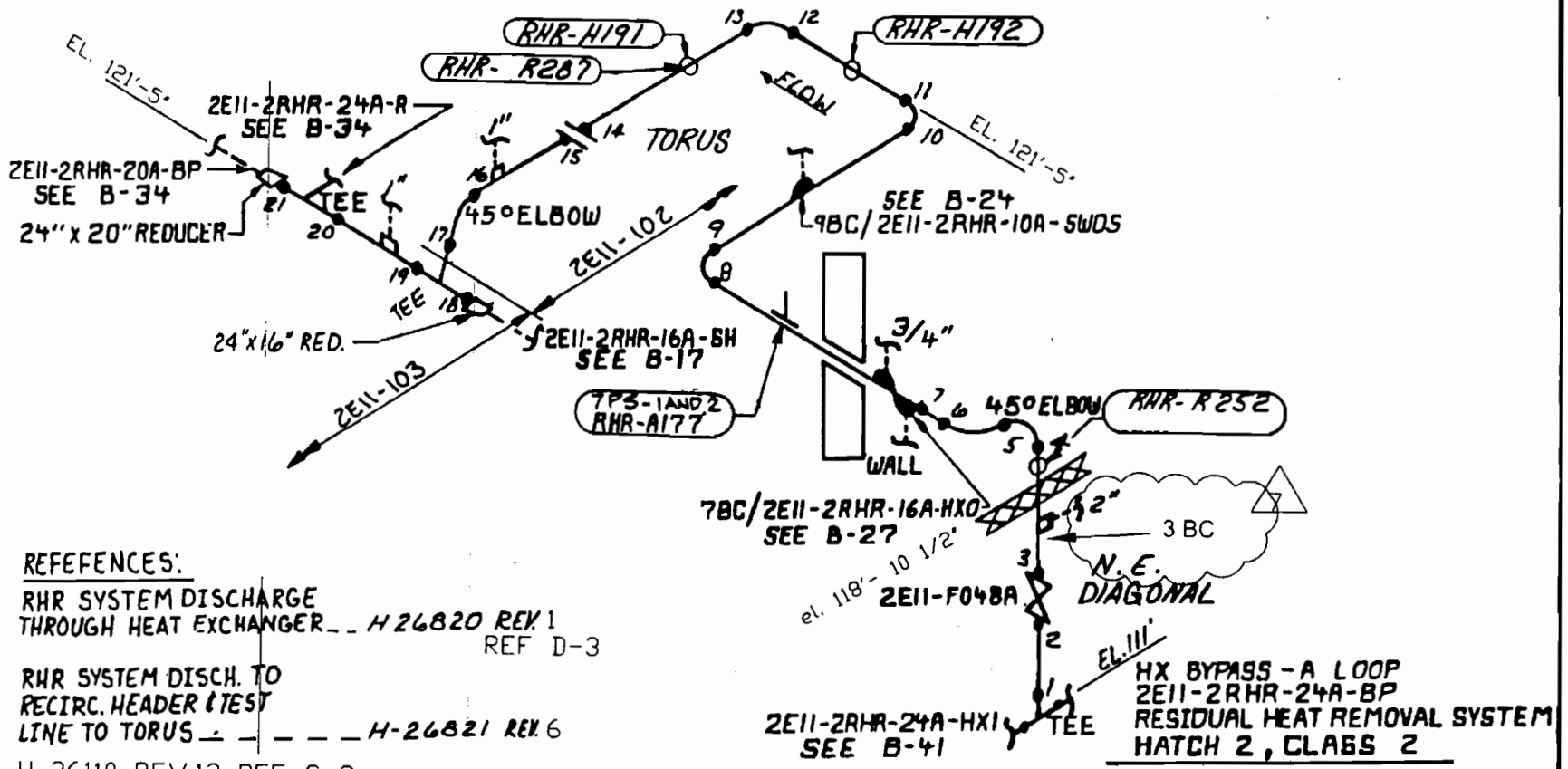

REFEFENCES:

RHR SYSTEM DISCHARGE THROUGH HEAT EXCHANGER _ _ H 26820 REV. 1 REF D-3

RHR SYSTEM DISCH. TO RECIRC. HEADER & TEST LINE TO TORUS _ _ _ _ _ H-26821 REV. 6

H-26110 REV.13 REF C-3

REV.	DATE	BY	CHK'D	APPR. 1
7	10-11-04	TAS	MB	DDS
6	1-05-01	RPW	BKJ	DRG
5	6-25-99	RPW	BKJ	DRG
4	10-1-92	WS	WC	DMB
3	11-30-90	WGS	WS	WHC
2	3/2/87	BST	WS	MB

LOCATION: N.E. DIAGONAL AND ABOVE TORUS

NOTE:
ALL DEVICE NUMBERS PRECEDED BY 2E11.

FIGURE B-40

REFERENCES:

RHR SYSTEM DISCHARGE
THROUGH HEAT EXCHANGER — — H-26820 REV. 1
REF F-2

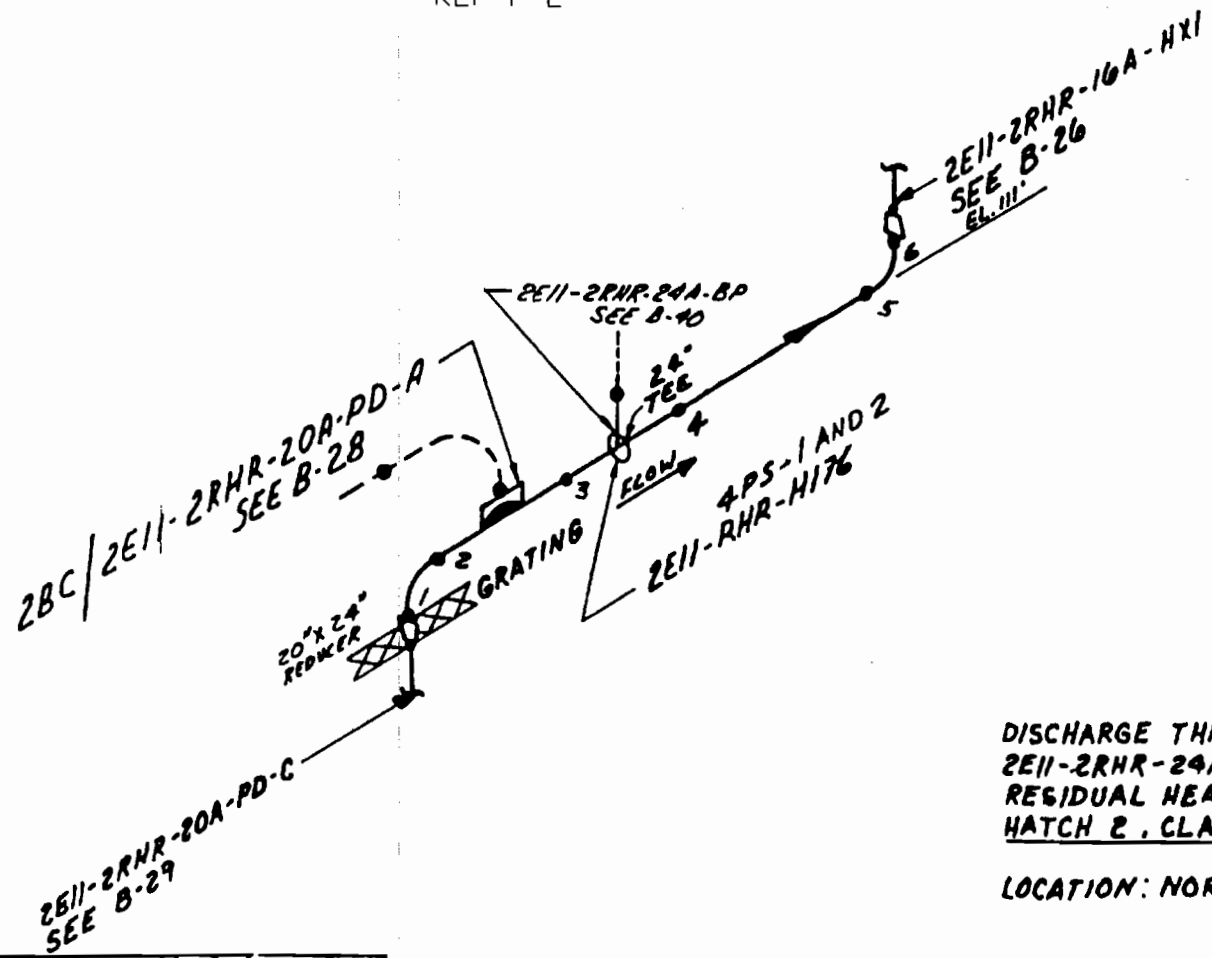

6

DISCHARGE THRU A LOOP HX
2E11-2RHR-24A-HXI
RESIDUAL HEAT REMOVAL SYSTEM
HATCH 2, CLASS 2

LOCATION: NORTHEAST DIAGONAL

REV.	DATE	BY	CHK'D	APPR. 1
4	10-1-92	WS	WC	DMB
6	9-27-04	SM	MB	DDS
5	6-25-99	RPW	BKJ	DRG

FIGURE B-41

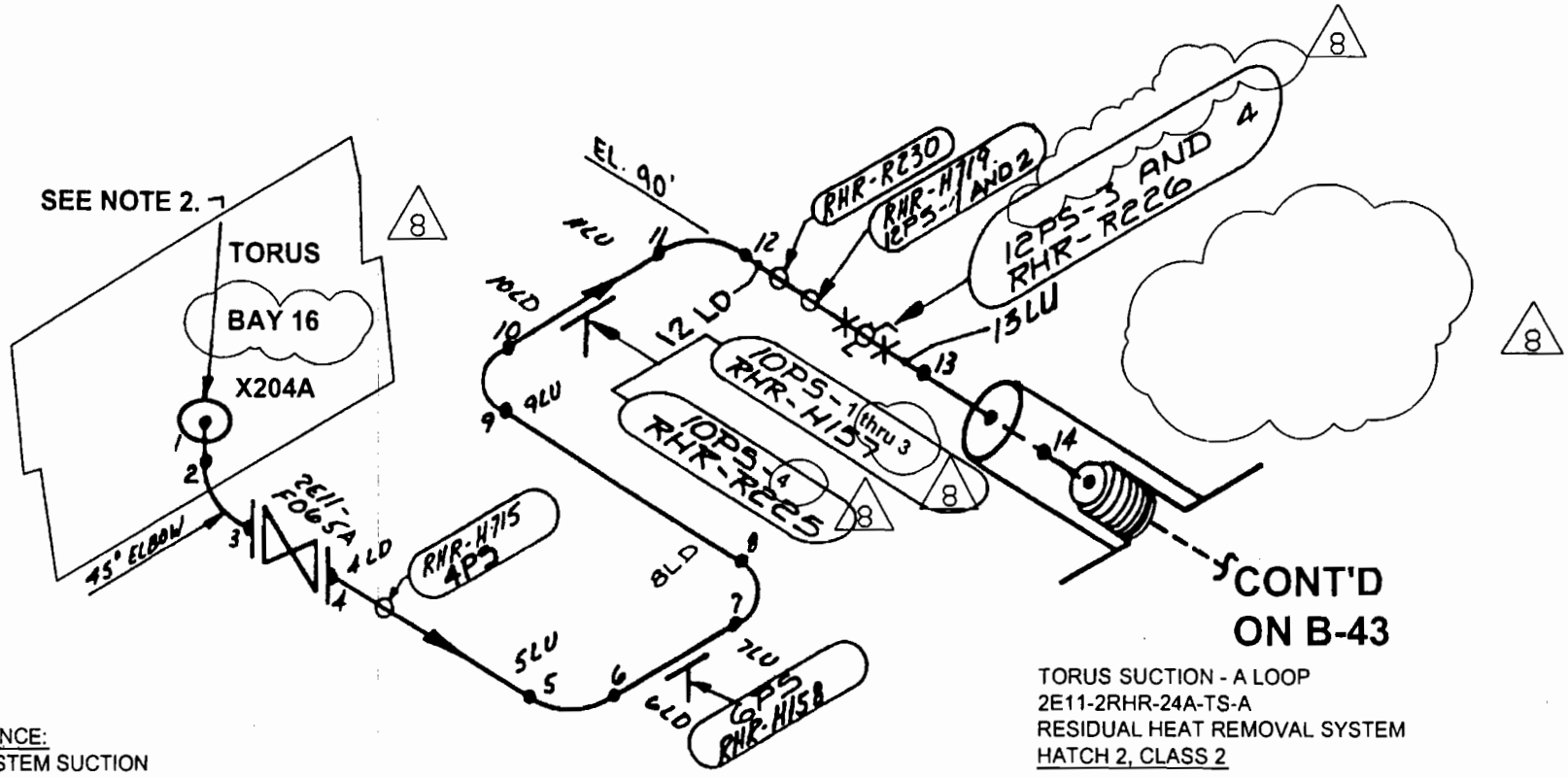

REFERENCE:
RHR SYSTEM SUCTION
FROM TORUS TO PUMPS
A, B, C, & D _ H-26818 REV. 2 REF. F-7

TORUS SUCTION - A LOOP
2E11-2RHR-24A-TS-A
RESIDUAL HEAT REMOVAL SYSTEM
HATCH 2, CLASS 2

LOCATION: TORUS AT 87' LEVEL
NOTE: 1. ALL DEVICE NUMBERS PRECEDED BY 2E11.
2. FOR DETAILED INFORMATION SEE FIGURE B-93

8	10-11-04	TAS	MB	DDS
Rev.	Date	By	CHK'D	APP.1

FIGURE B-42

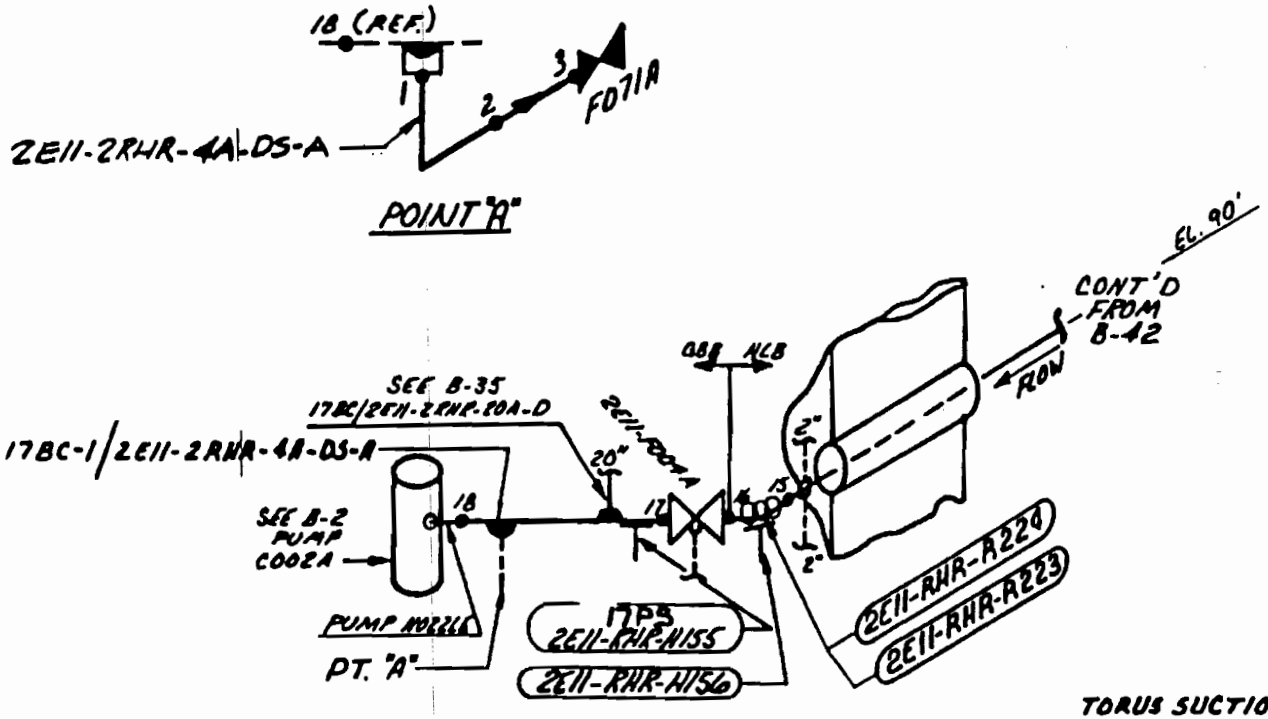

REFERENCES:
RHR SYSTEM SUCTION FROM TORUS TO PUMPS A,B,C & D — H-26818 REV. 2 REF G-5 (4)

TORUS SUCTION-A LOOP
2E11-2RHR-4A-DS-A
2E11-2RHR-24A-TS-A
RESIDUAL HEAT REMOVAL SYSTEM
HATCH 2-CLASS 2

LOCATION: NORTHEAST DIAGONAL

REV	DATE	BY	CHK'D	APPR. 1
4	6-25-99	RPW	BKJ	DRG
3	11-30-90	WGS	WS	WHC
2	3/2/87	BST	WS	MB

FIGURE B-43

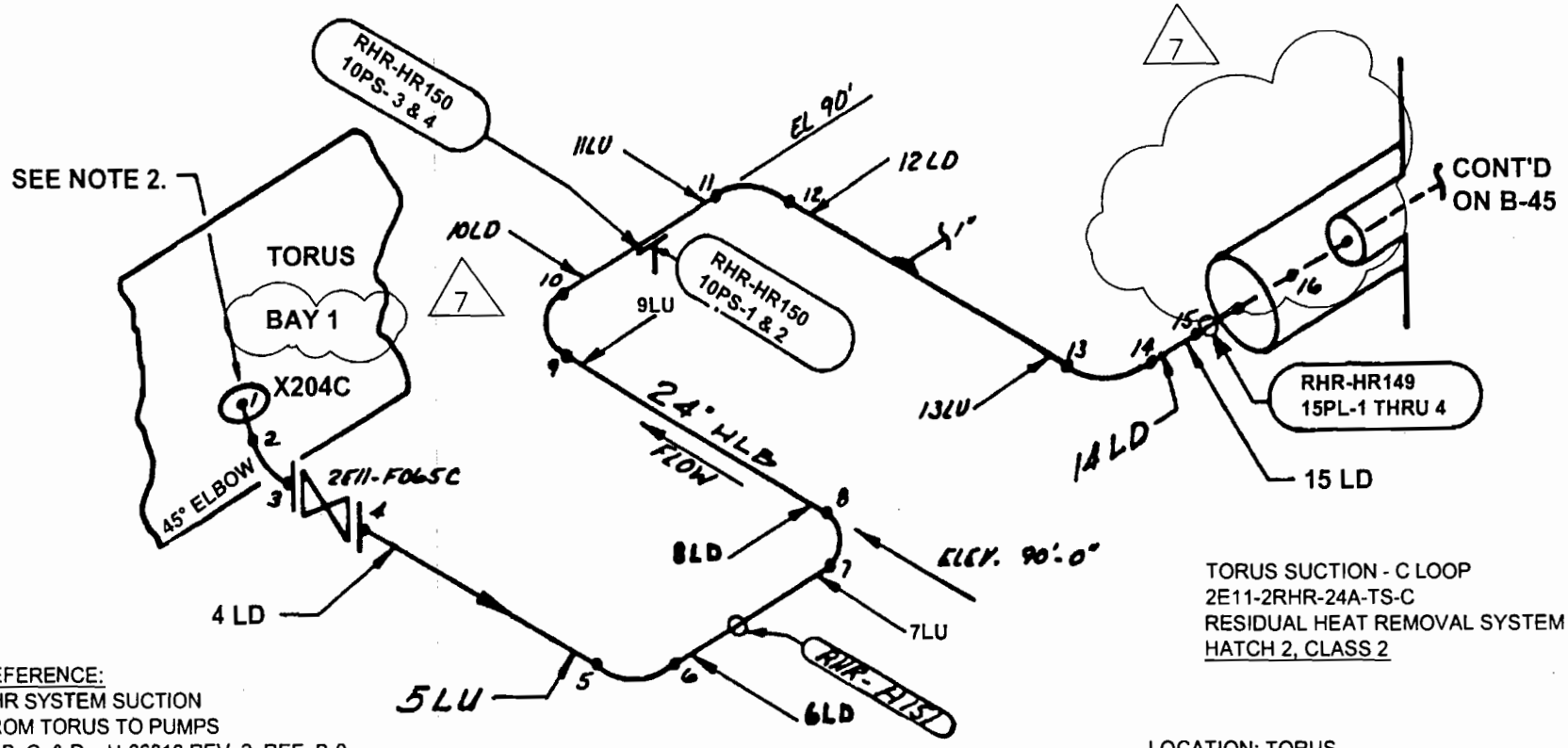

REFERENCE:
RHR SYSTEM SUCTION
FROM TORUS TO PUMPS
A, B, C, & D _ H-26818 REV. 2 REF. B-9

TORUS SUCTION - C LOOP
2E11-2RHR-24A-TS-C
RESIDUAL HEAT REMOVAL SYSTEM
HATCH 2, CLASS 2

LOCATION: TORUS
NOTE: 1. ALL DEVICE NUMBERS PRECEDED BY 2E11.
2. FOR DETAILED INFORMATION SEE FIGURE B-93

7	10-11-04	TAS	MB	DDS
Rev.	Date	By	CHK'D	APP.1

FIGURE B-44

REFERENCES:

RHR SYSTEM SUCTION
FROM TORUS TO PUMPS
A, B, C & D — — — — — H-26818 REV. 2
REF C-6

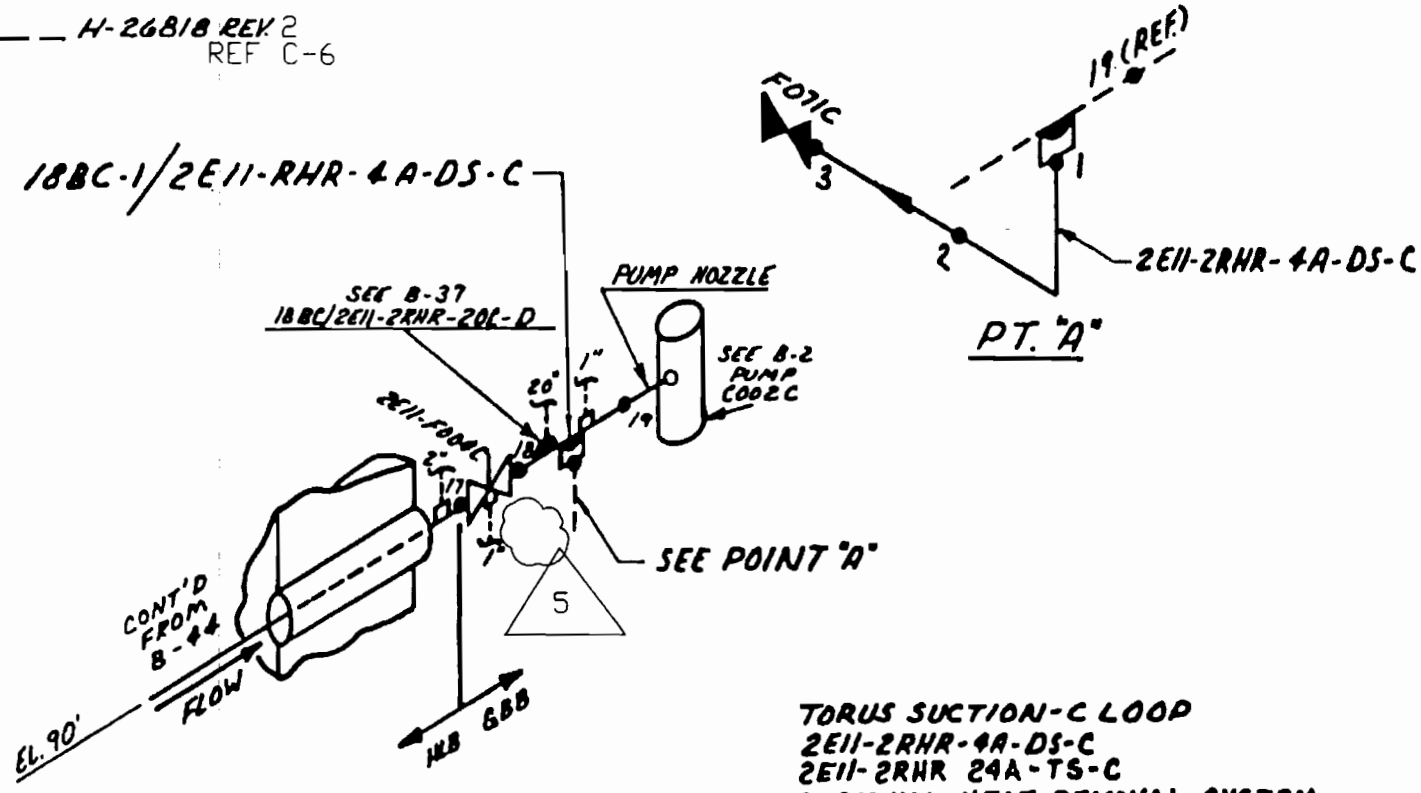

TORUS SUCTION-C LOOP
2E11-2RHR-4A-DS-C
2E11-2RHR 24A-TS-C
RESIDUAL HEAT REMOVAL SYSTEM
HATCH 2, CLASS 2

LOCATION: NORTHEAST DIAGONAL

REV.	DATE	BY	CHK'D	APPR. 1
5	10-11-04	TAS	MB	OOS
4	6-25-99	RPW	BKJ	DRG
3	11-30-90	WGS	WS	WHC
2	3/2/87	BST	WS	MB

FIGURE B-45

REFERENES:
RHR SYSTEM DISCHARGE
THROUGH HEAT EXCHANGER __ H-26820 REV. 1 REF D-3
~~H-26110 REV.13 REF. D-11~~
H-28000 REV. 6 REF. F-3

5

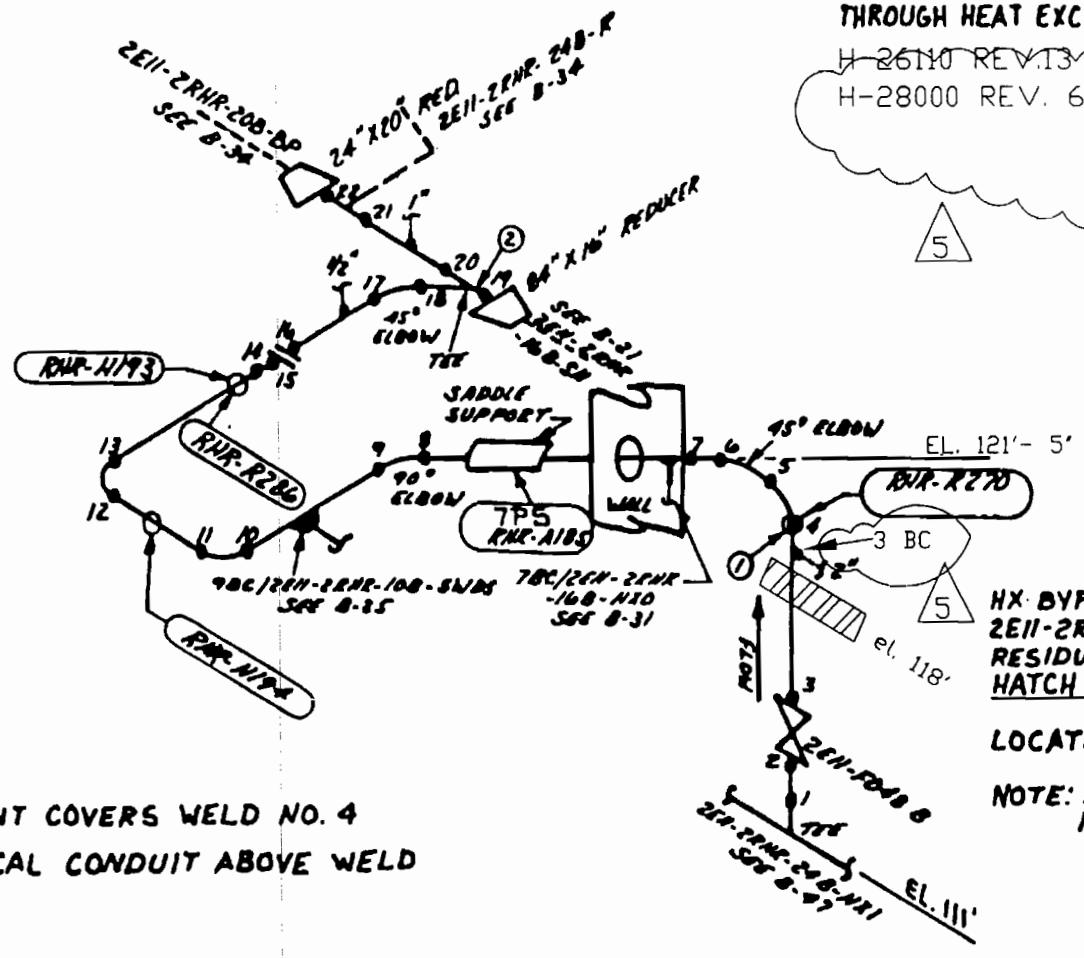

HX BYPASS - B LOOP
2E11-2RHR-24B-BP
RESIDUAL HEAT REMOVAL SYS.
HATCH 2, CLASS 2

LOCATION: SE DIAGONAL AND ABOVE TORUS

NOTE: ALL DEVICE NUMBERS PRECEDED BY 2E11

① RESTRAINT COVERS WELD NO. 4

② ELECTRICAL CONDUIT ABOVE WELD

REV	DATE	BY	CHK'D	APPR. 1
4	1-05-01	RPW	BKJ	DRG
3	6-25-99	RPW	BKJ	DRG
2	11-30-90	WGS	WS	WHC
5	9-27-04	SM	MB	DDS

FIGURE B-46

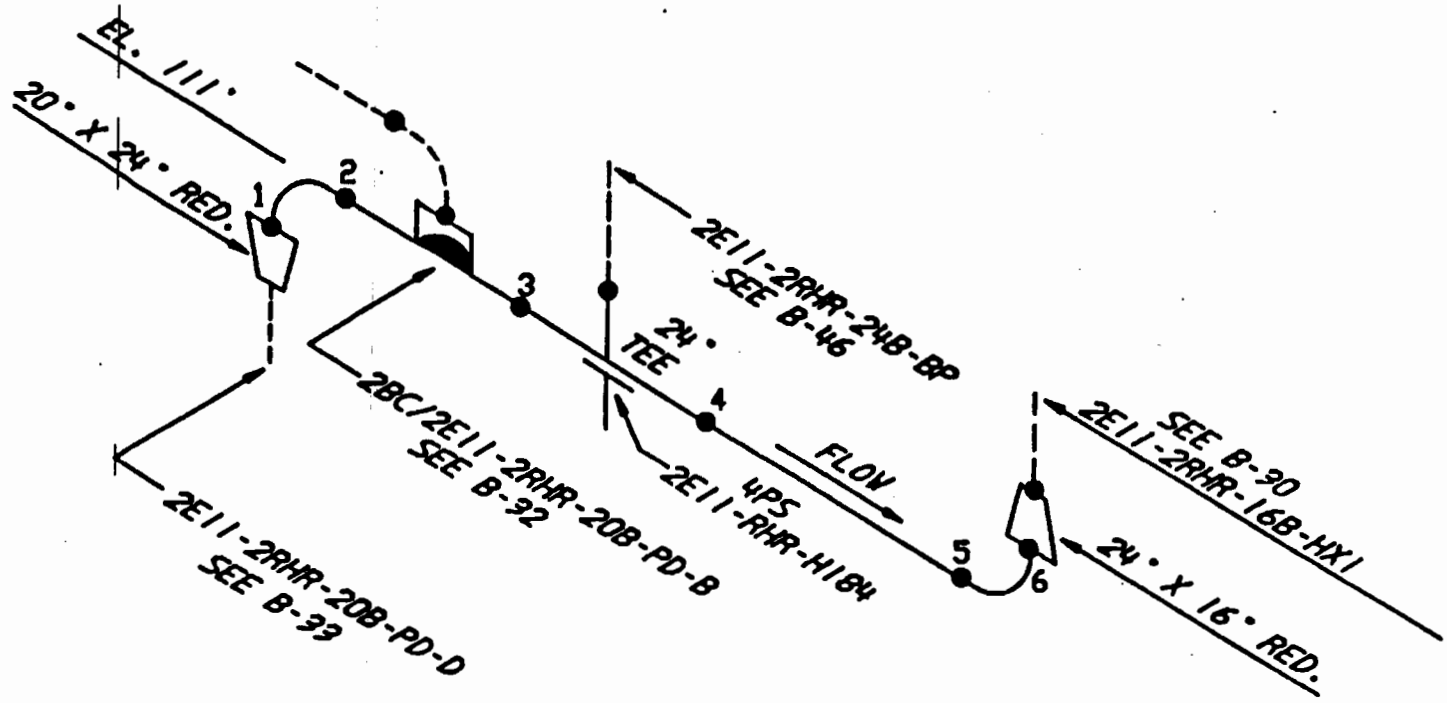

REFERENCE

RHR SYSTEM DISCHARGE
THROUGH HEAT EXCHANGER---H-26820 REV.1 4

REV	DATE	BY	CHK'D	APPR 1
4	6-25-99	RPW	BKJ	DRG
3	1-30-91	WGS	WS	WHC

FIGURE B-47

DISCHARGE THRU B LOOP HX
2E11-2RHR-24B-HXI
RESIDUAL HEAT REMOVAL SYSTEM
HATCH 2 CLASS 2

LOCATION: SE DIAGONAL

REFERENCES:
RHR SYSTEM SUCTION
FROM TORUS TO PUMPS
A,B, C, & D _ H-26818 REV. 2 , REF. F-7

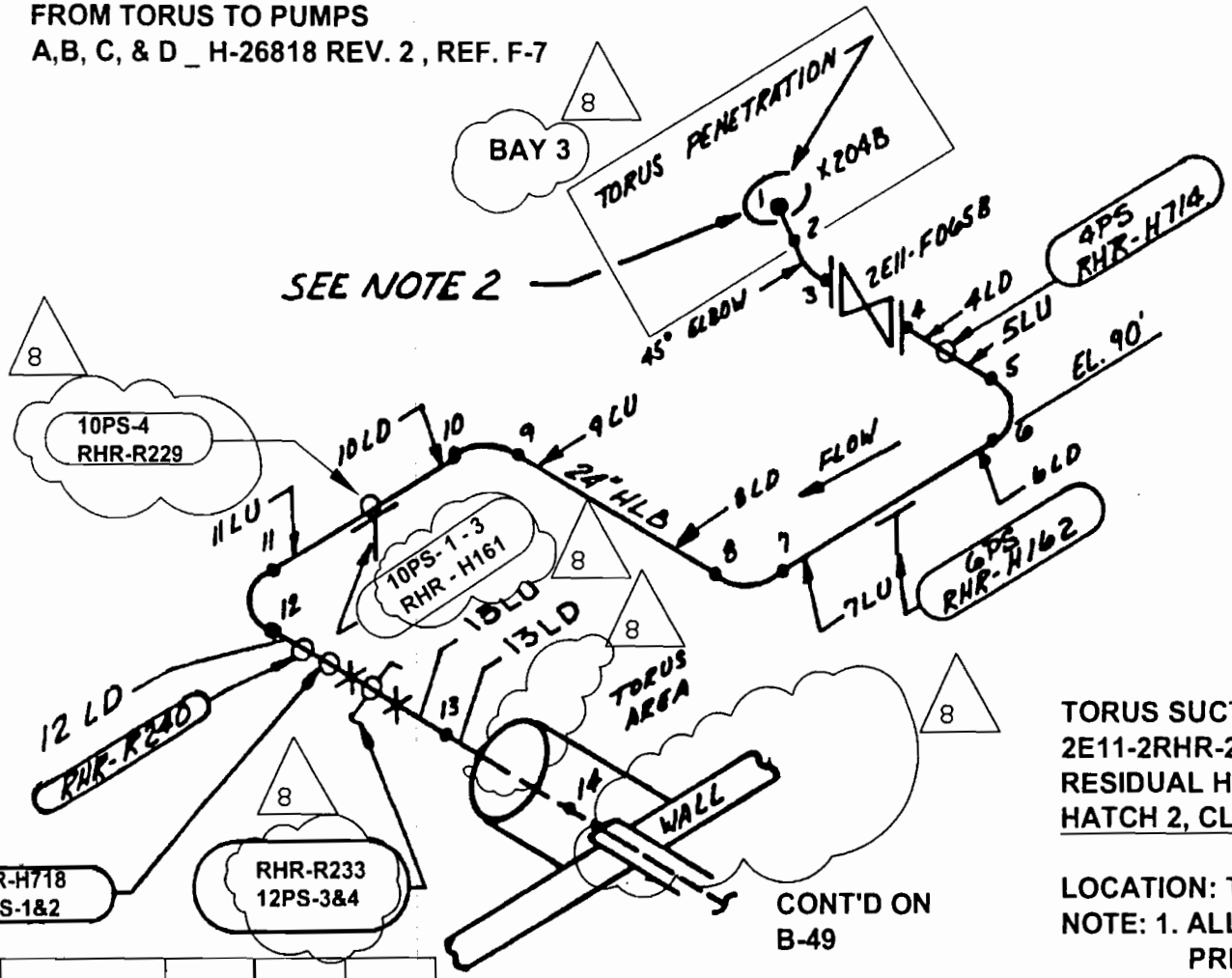

TORUS SUCTION - B LOOP
2E11-2RHR-24B-TS-B
RESIDUAL HEAT REMOVAL SYSTEM
HATCH 2, CLASS 2

LOCATION: TORUS AT 87' LEVEL
NOTE: 1. ALL DEVIC NUMBERS PRECEDED BY 2E11.
2. FOR DETAILED INFO. SEE FIGURE B-93.

FIGURE B-48

Rev.	Date	By	CHK'D	APP.1
8	10-25-04	TAS	MB	DDS

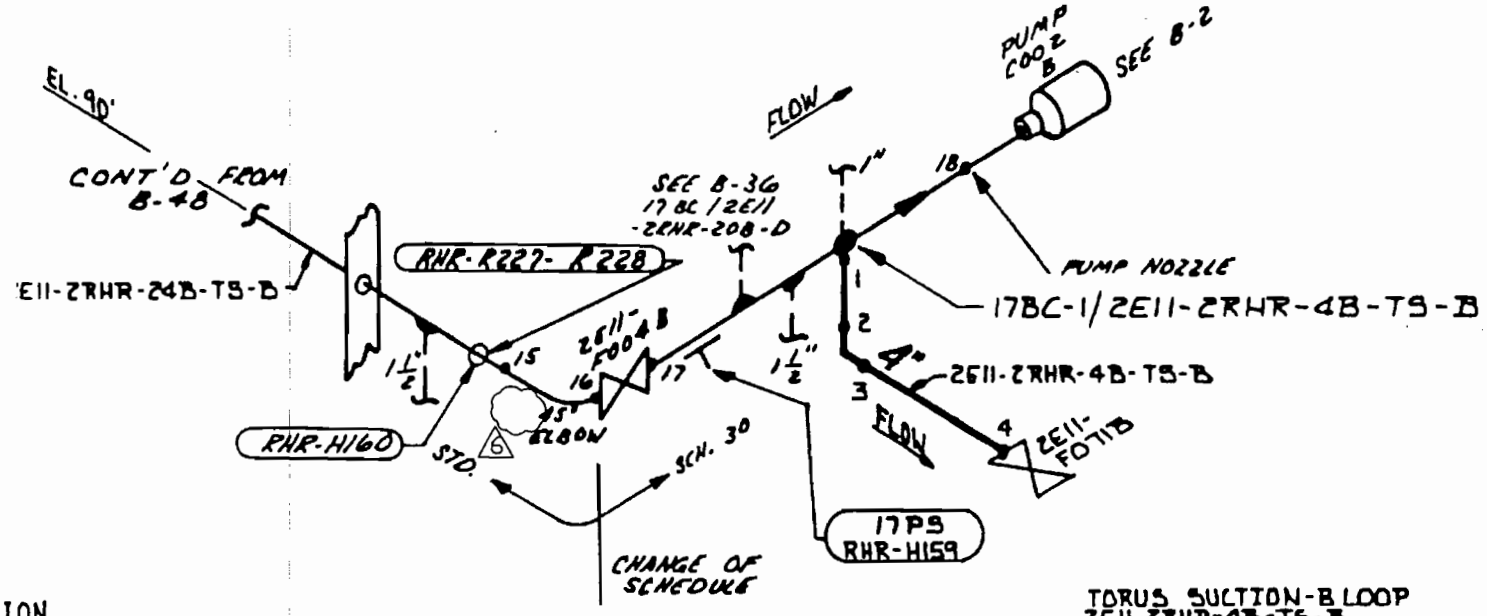

REFERENCES:

RHR SYSTEM SUCTION FROM TORUS TO PUMPS A,B,C & D — H-26818 REV. 2 REF G-5

RHR DRAIN LINES — 2E11-112 REV 1 (H-26830) REF G-10

REV	DATE	BY	CHK'D	APPR. 1
6	10-11-04	TAS	MB	OOS
5	6-25-99	RPW	BKJ	DRG
4	11-30-90	WGS	WS	WHC
3	4-15-87	BSIT	BKG	CWD
2	2/26/87	BKG	WS	MB

TORUS SUCTION-B LOOP
2E11-2RHR-4B-TS-B
2E11-2RHR-24B-TS-B
RESIDUAL HEAT REMOVAL SYSTEM
HATCH 2, CLASS 2

LOCATION: SOUTHEAST DIAGONAL
NOTE:
ALL DEVICE NUMBERS PRECEDED BY 2E11.

FIGURE B-49

REFERENCE:
RHR SYSTEM SUCTION
FROM TORUS TO PUMPS
A, B, C, & D _ H-26818 REV. 2 REF. B-9

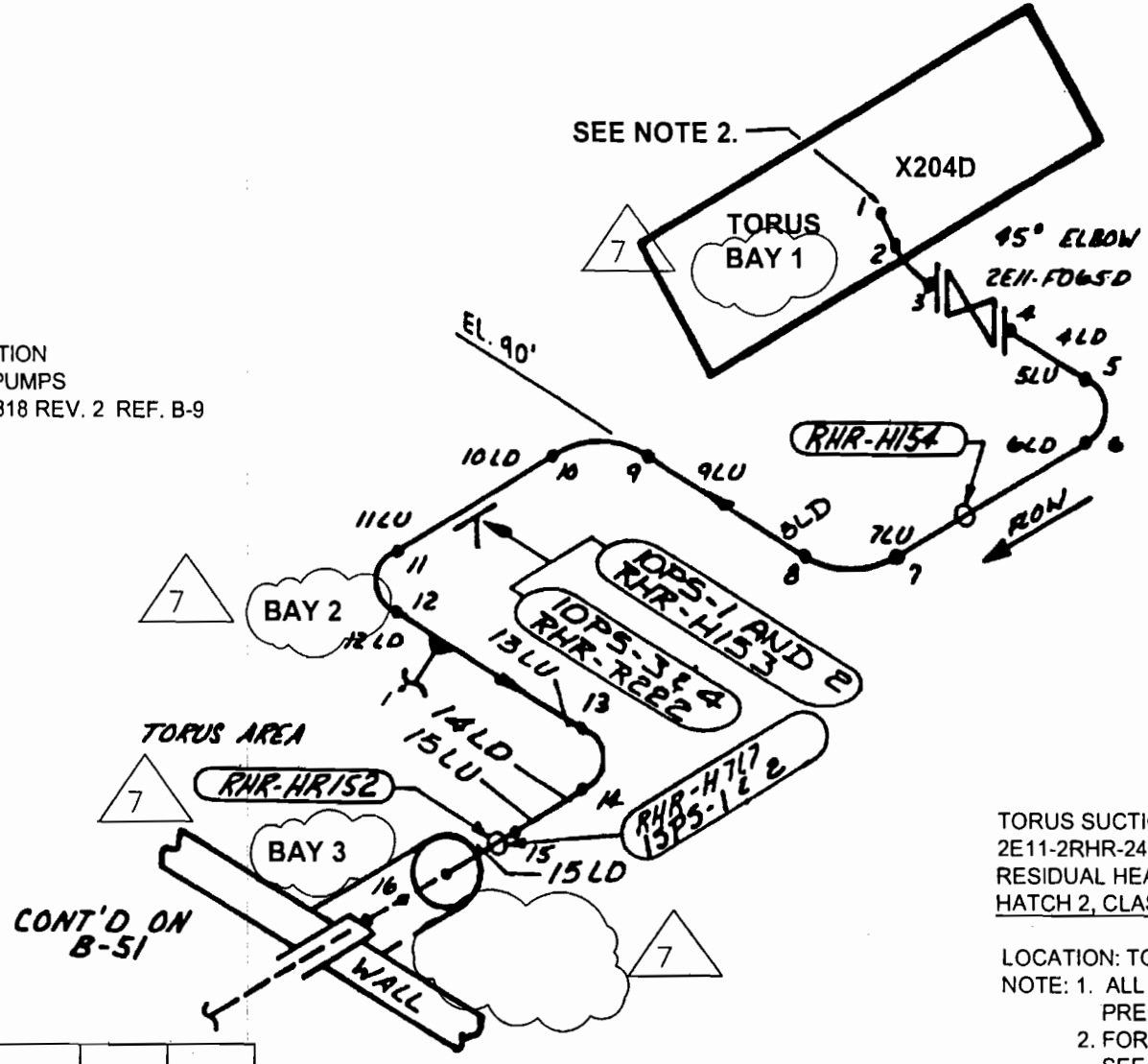

TORUS SUCTION - D LOOP
2E11-2RHR-24B-TS-D
RESIDUAL HEAT REMOVAL SYSTEM
HATCH 2, CLASS 2

LOCATION: TORUS 87' LEVEL
NOTE: 1. ALL DEVICE NUMBERS PRECEDED BY 2E11.
2. FOR DETAILED INFORMATION SEE FIGURE B-93

FIGURE B-50

7	10-11-04	TAS	MB	DDS
Rev.	Date	By	CHK'D	APP.1

REFERENCES:

RHR SYSTEM SUCTION FROM TORUS TO PUMPS A, B, C & D — H26818, REV. 2 REF C-6

RHR DRAIN LINES — H-26830, REV. 1 REF G-7

5

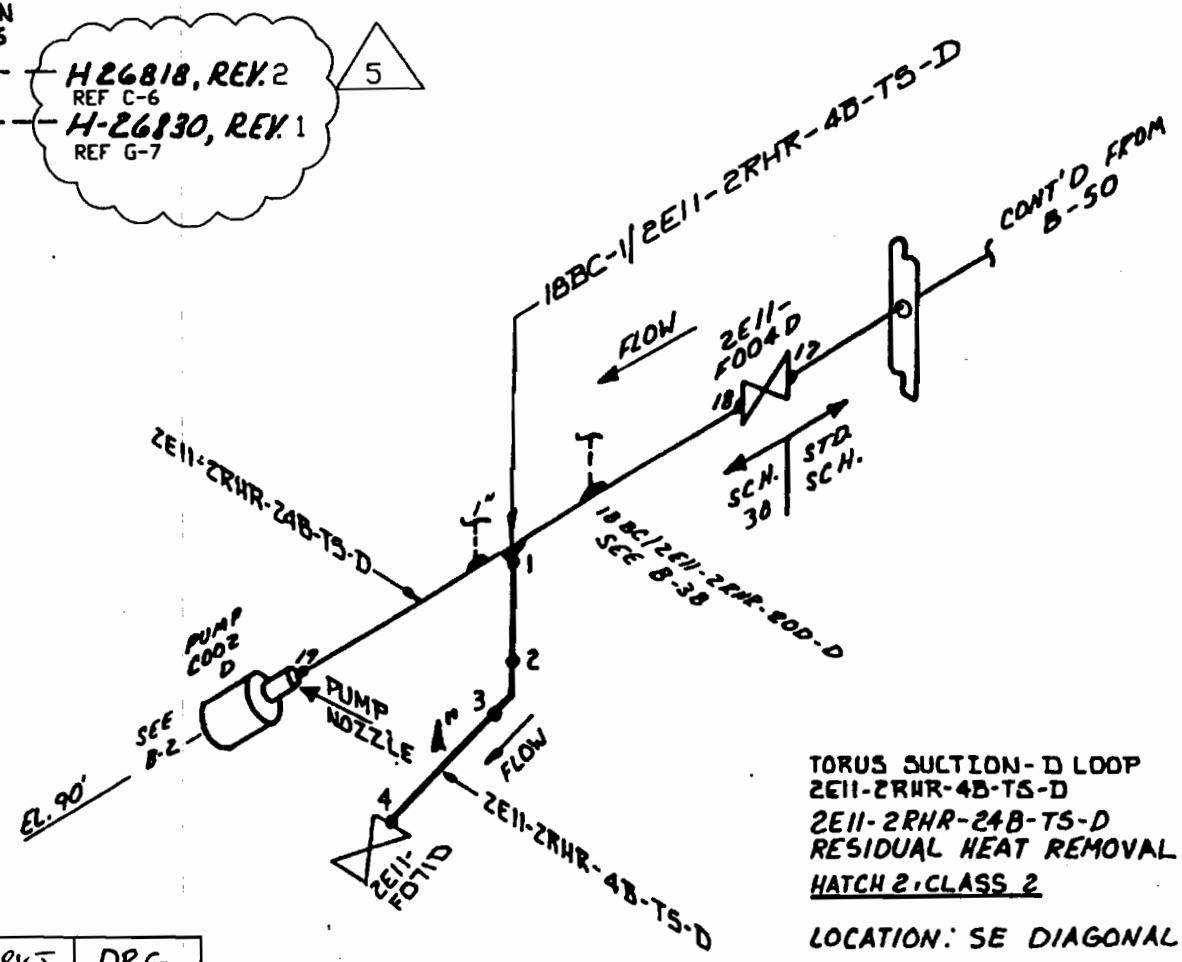

TORUS SUCTION-D LOOP
2E11-2RHR-4B-TS-D
2E11-2RHR-24B-TS-D
RESIDUAL HEAT REMOVAL SYSTEM
HATCH 2, CLASS 2

LOCATION: SE DIAGONAL

FIGURE B-51

REV	DATE	BY	CHK'D	APPR 1
5	6-25-99	RPW	BKJ	DRG
4	11-30-90	WGS	WS	WHC
3	4-13-87	BST	BKG	[illegible]
2	2/26/87	BKG	WS	MB

REFERENCES:
CORE SPRAY SYSTEM
PUMP "A" DISCH. TO RPV. — H-26836 REV 3 (5)
REF D-9

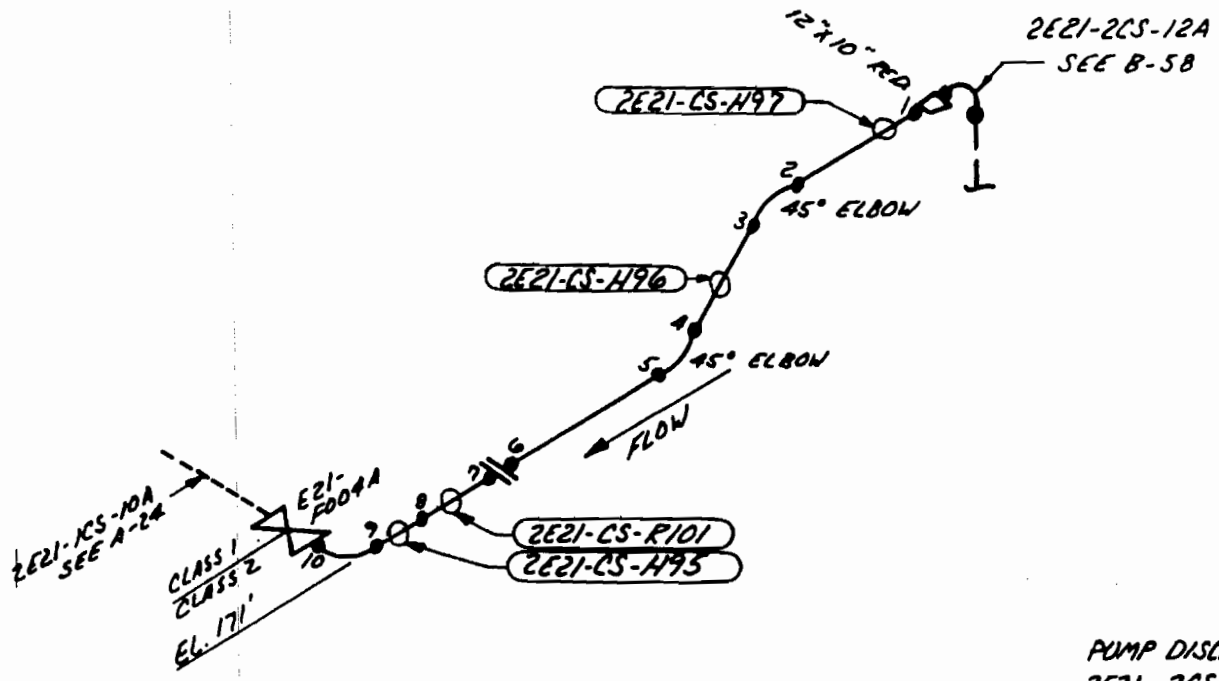

PUMP DISCHARGE - LOOP A
2E21 - 2CS - 10A
CORE SPRAY SYSTEM
HATCH 2, CLASS 2

LOCATION : NORTH SIDE OF DRYWELL

FIGURE B-52

REV	DATE	BY	CHK'D	APPR. 1
4	6-25-99	RPW	BK	DRG
3	11-30-90	WGS	WS	WHC
5	9-27-04	SM	MB	DDS

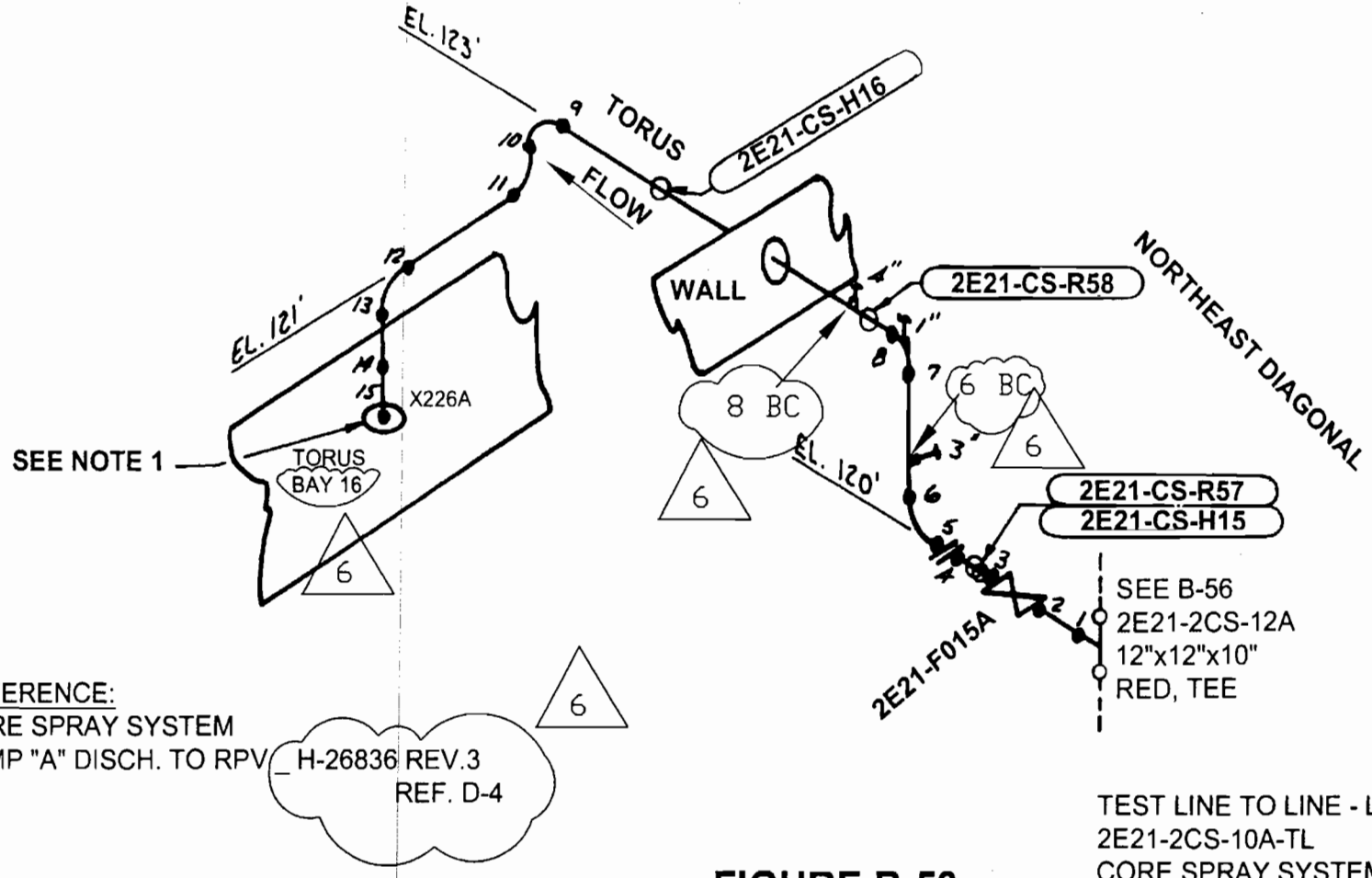

REFERENCE:
CORE SPRAY SYSTEM
PUMP "A" DISCH. TO RPV _ H-26836 REV.3
REF. D-4

6	9-27-04	SM	MB	DDS
Rev.	Date	By	CHK'D	APP'd

FIGURE B-53

TEST LINE TO LINE - LOOP A
2E21-2CS-10A-TL
CORE SPRAY SYSTEM
HATCH 2, CLASS 2
LOCATION: NE. DIAGONAL
AND ABOVE TORUS
NOTE:
1. FOR DETAILED INFO. SEE FIGURE B-93

REFERENCES:

CORE SPRAY SYSTEM
PUMP "B" DISCH. TO RPV__ H-26837, REV. 2

REF G-6

6

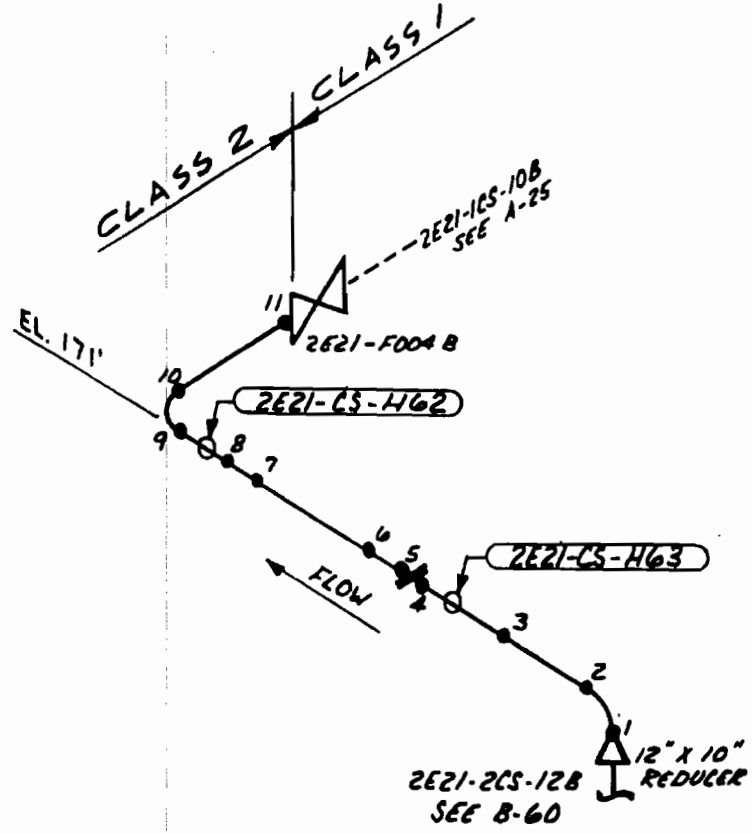

PUMP DISCHARGE - B LOOP
2E21-2CS-10B
CORE SPRAY SYSTEM
HATCH 2, CLASS 2

LOCATION: R.W.C.U. HEAT EXCHANGER ROOM

FIGURE B-54

REV	DATE	BY	CHK'D	APPR. 1
4	6-10-91	WGS	WS	WHC
6	9-27-04	SM	MB	ODS
5	9-23-92	WS	WC	DMS

REFERENCES:
CORE SPRAY SYSTEM
PUMP "8" DISCH. TO RPV - H-26837 REV. 2, REF-3

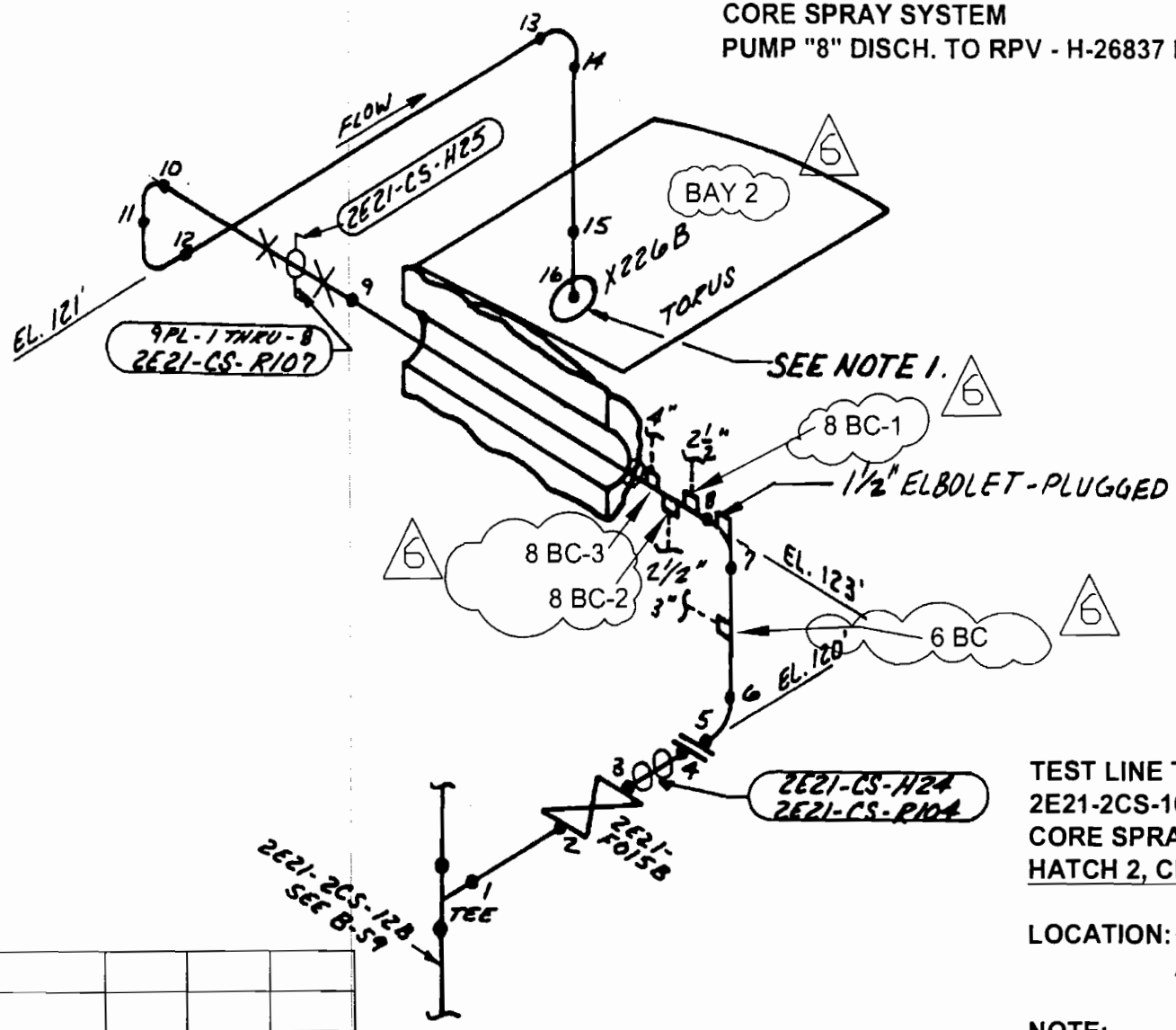

FIGURE B-55

TEST LINE TO TORUS - LOOP B
2E21-2CS-10B-TL
CORE SPRAY SYSTEM
HATCH 2, CLASS 2

LOCATION: SOUTHEAST DIAG.
AND ABOVE TORUS

NOTE:
1. FOR DETAILED INFORMATION SEE FIGURE B-93

Rev.	Date	By	CHK'D	APP.1
6	9-27-04	SM	MB	DDS

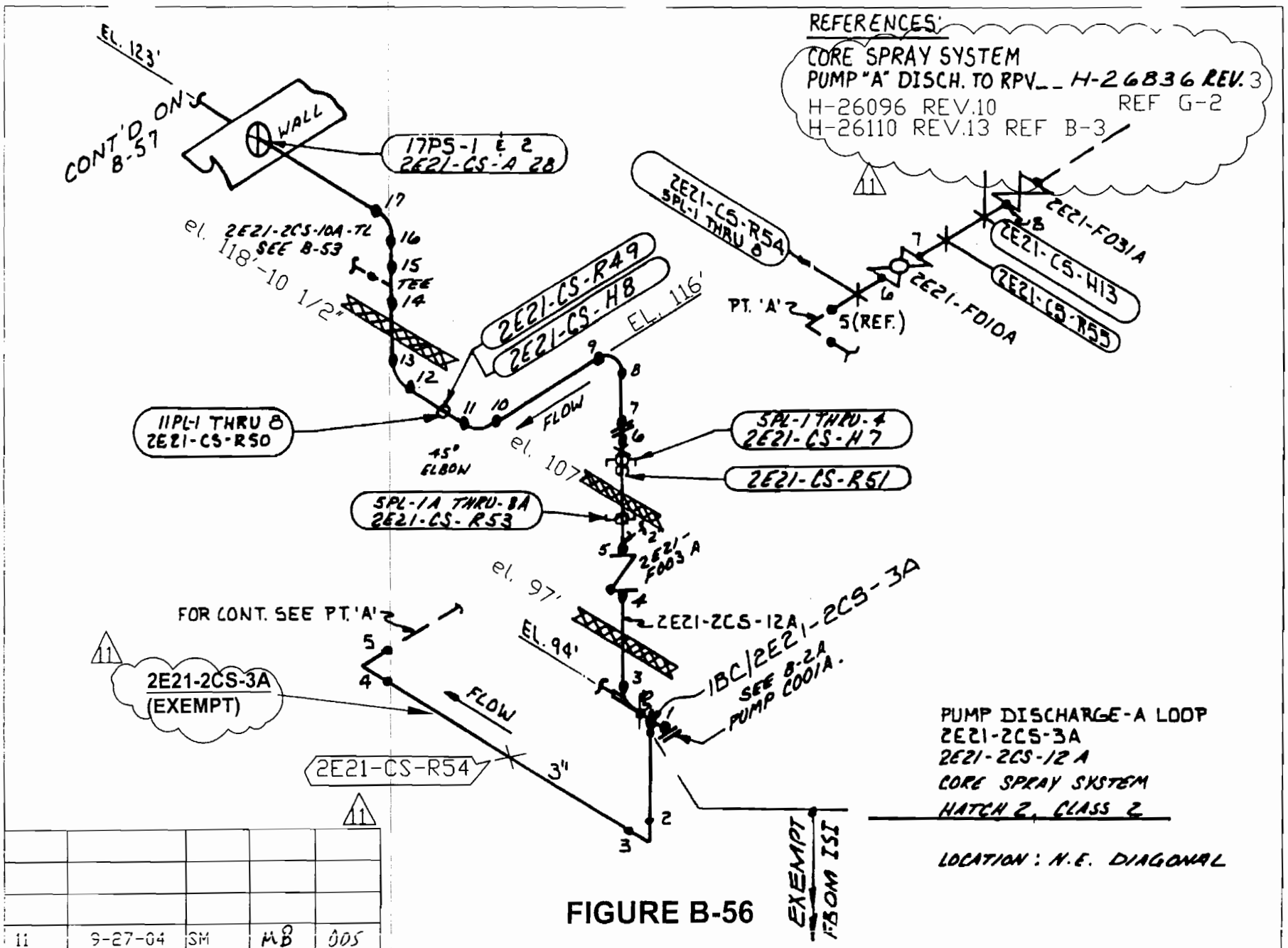

FIGURE B-56

Rev.	Date	By	CHK'D	APP.1
11	9-27-04	SM	MB	ODS

REFERENCES:
CORE SPRAY SYSTEM
PUMP "A" DISCH. TO RPV__ H-26836 REV. 3
REF C-6

7

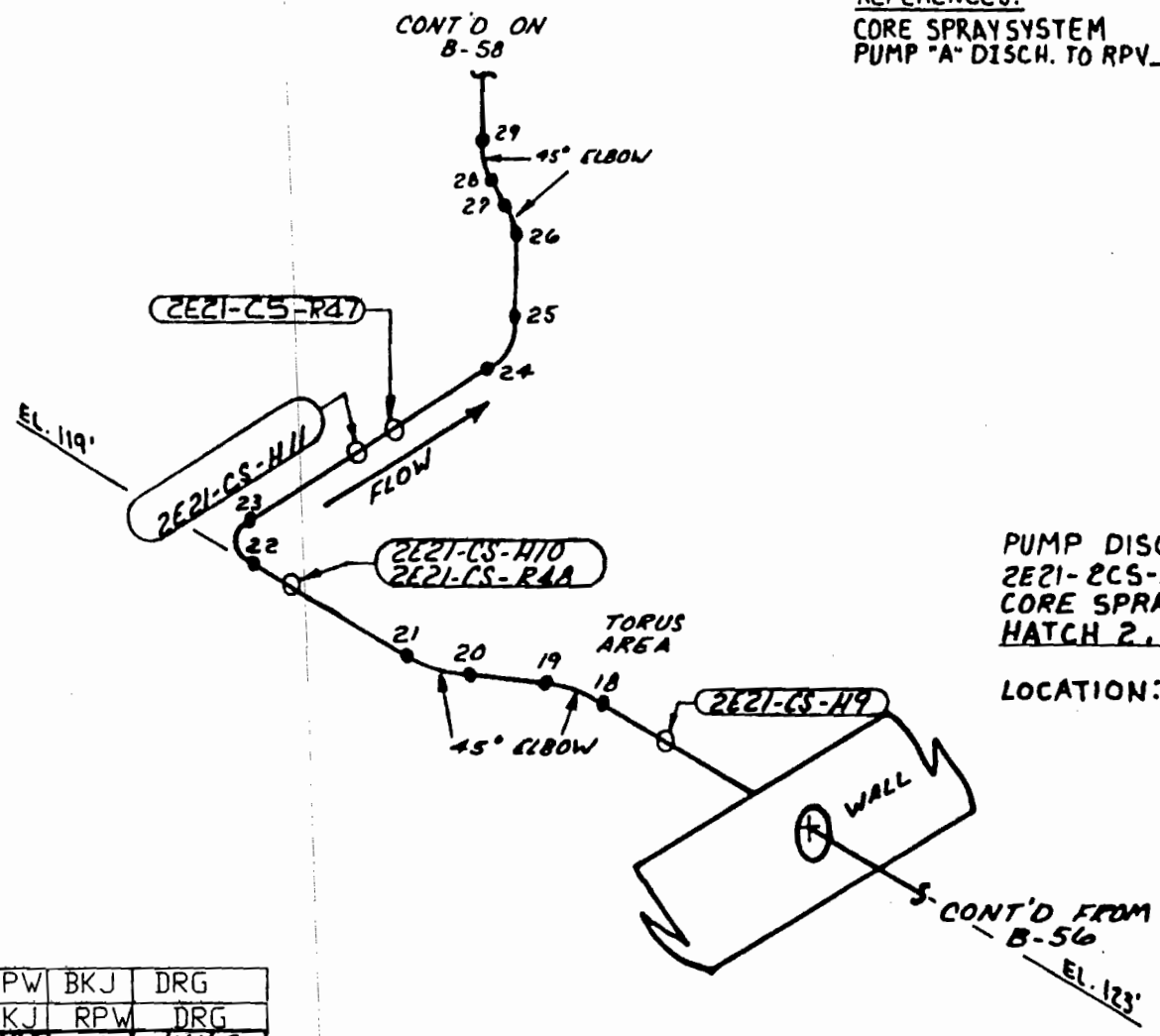

PUMP DISCHARGE-A LOOP
2E21-2CS-12A
CORE SPRAY SYSTEM
HATCH 2, CLASS 2

LOCATION: ABOVE TORUS
N.E. Diagonal

FIGURE B-57

REV.	DATE	BY	CHK'D	APPR.
6	1-05-01	RPW	BKJ	DRG
5	6/25/99	BKJ	RPW	DRG
4	11-30-90	WJGS	WS	WHC
3	4-13-87	BST	EPL	C. D
7	9-27-04	SM	MB	DDS

REFERENCES:

CORE SPRAY SYSTEM
PUMP "A" DISCH. TO RPV _ H-26836 REV. 3
REF E-8

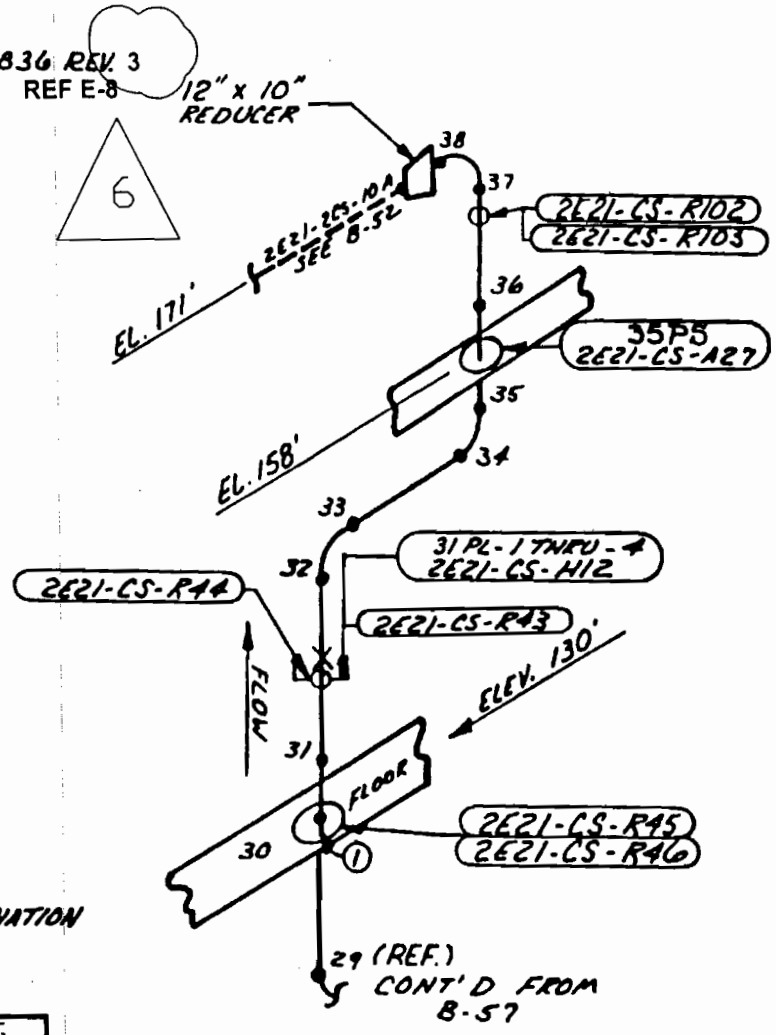

NOTES:

1. FLOOR WILL LIMIT EXAMINATION OF WELD NO. 30

REV.	DATE	BY	CHK'D	APPR. 1
5	6-25-98	BKJ	RPW	DRG
4	11-30-90	WJGS	WS	WHC
3	5-28-87	CSB	[illegible]	[illegible]
6	9-27-04	SM	MB	DDS

FIGURE B-58

PUMP DISCHARGE - A LOOP
2E21-2CS-12A
CORE SPRAY SYSTEM
HATCH 2, CLASS 2

LOCATION : NORTH SIDE OF DRYWELL

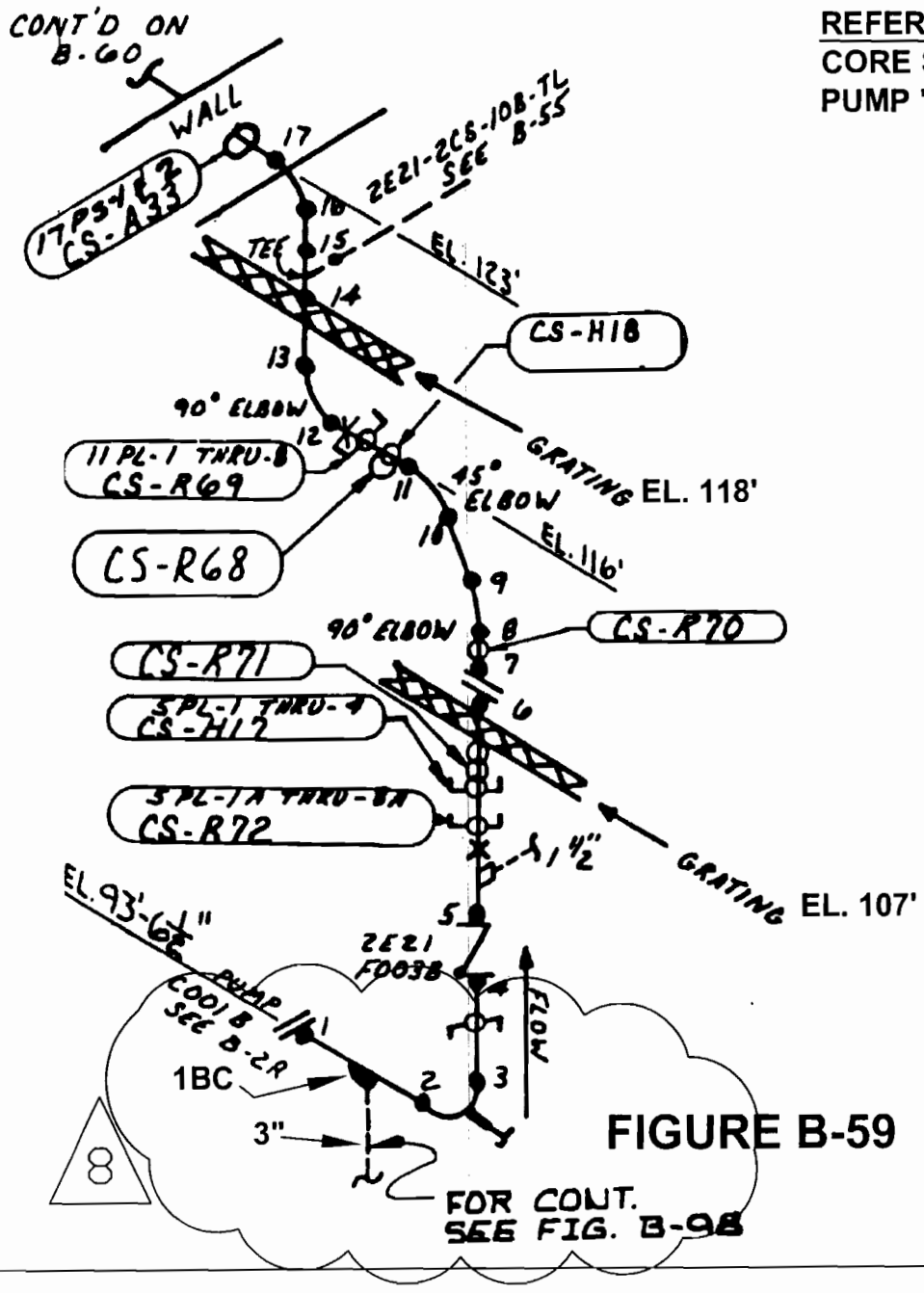

REFERENCES:
CORE SPRAY SYSTEM
PUMP "B" DISCH. TO RPV_ H-26837
REV.2, REF G-8

PUMP DISCHARGE- B LOOP
2E21-2CS-12B
CORE SPRAY SYSTEM
HATCH 2, CLASS 2

LOCATION: SOUTHEAST DIAGONAL
NOTE:
ALL DEVICE NUMBERS PROCEDED BY 2E21.

FIGURE B-59

8	11-20-06	SM	KO	DDS
7	9-27-04	SM	MB	DDS
Rev.	Date	By	CHK'D	APP.1

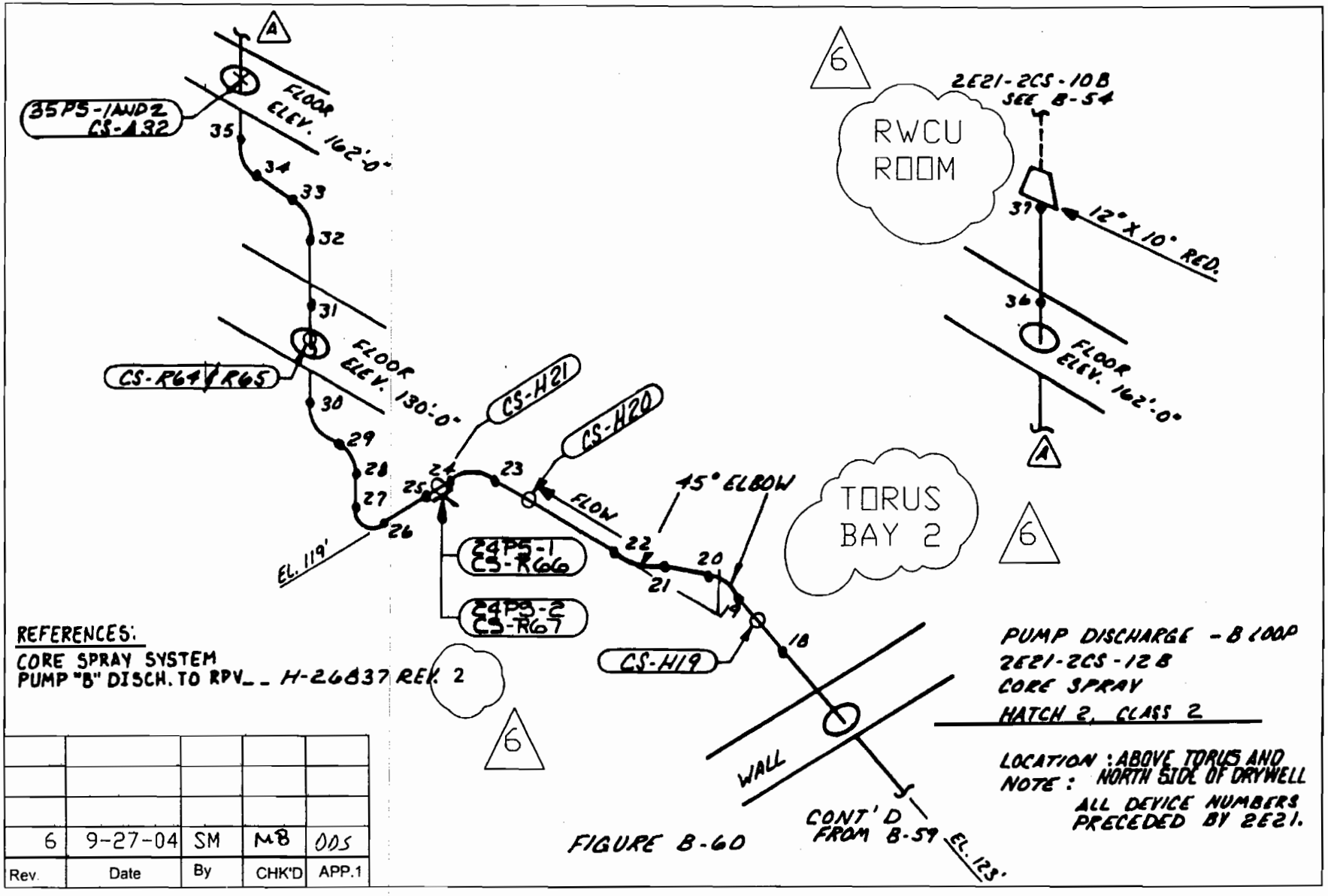

FIGURE B-60

6	9-27-04	SM	MB	ODS
Rev.	Date	By	CHK'D	APP.1

REFERENCES:

CORE SPRAY SYSTEM SIDE A&B PUMP SUCTION FROM TORUS & CONDENSATE STORAGE TANK — — — — H-26835 REV.3

REF. C-2

5

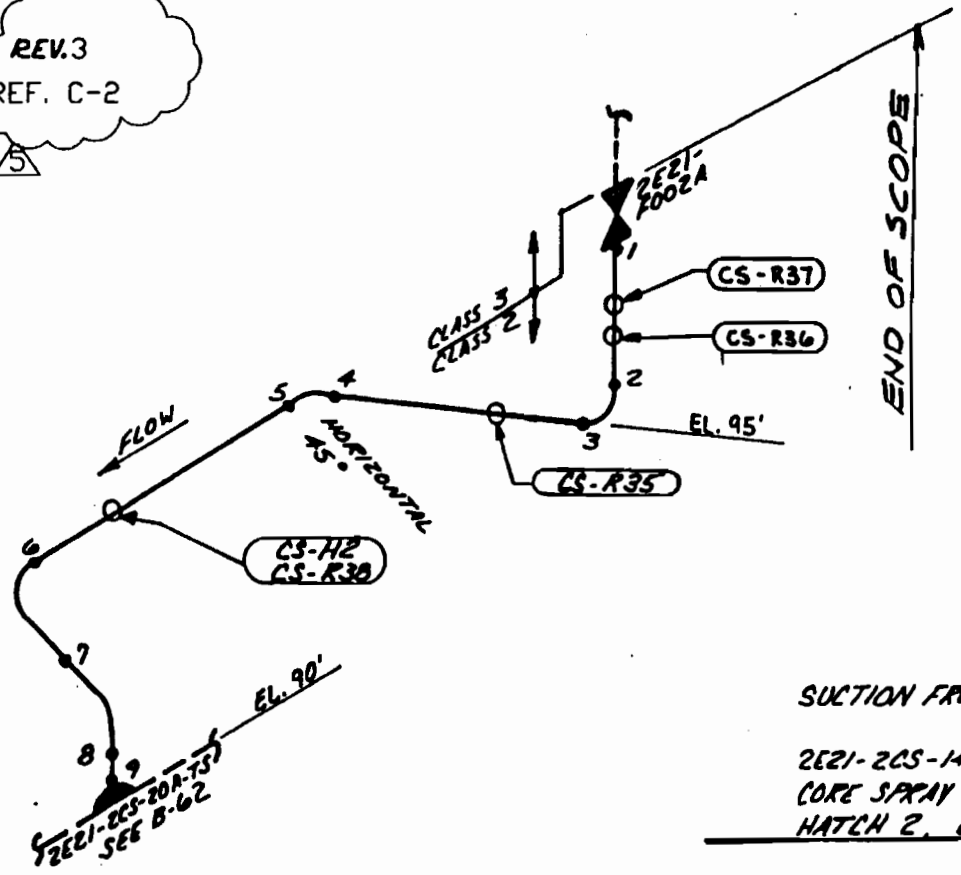

SUCTION FROM COND. STOR. - A LOOP

2E21-2CS-14A-CTS
CORE SPRAY SYSTEM
HATCH 2, CLASS 2

LOCATION: N.E. DIAGONAL
NOTE:
ALL DEVICE NUMBERS PRECEDED BY 2E21.

FIGURE B-60A

REV.	DATE	BY	CHK'D	APPR. 1
5	6-25-99	BKJ	DW	D&G
4	6/25/96	WS	KEW	WHC
3	11-30-90	WGS	WS	WHC
2	3/2/87	BST	WS	MB

CORE SPRAY SYSTEM SIDE
A & B PUMP SUCTION FROM
TORUS & CONDENSATE
STORAGE TANK — — — — H-26035 REV 3 REF C9
H-26109 REV.10 REF D-12

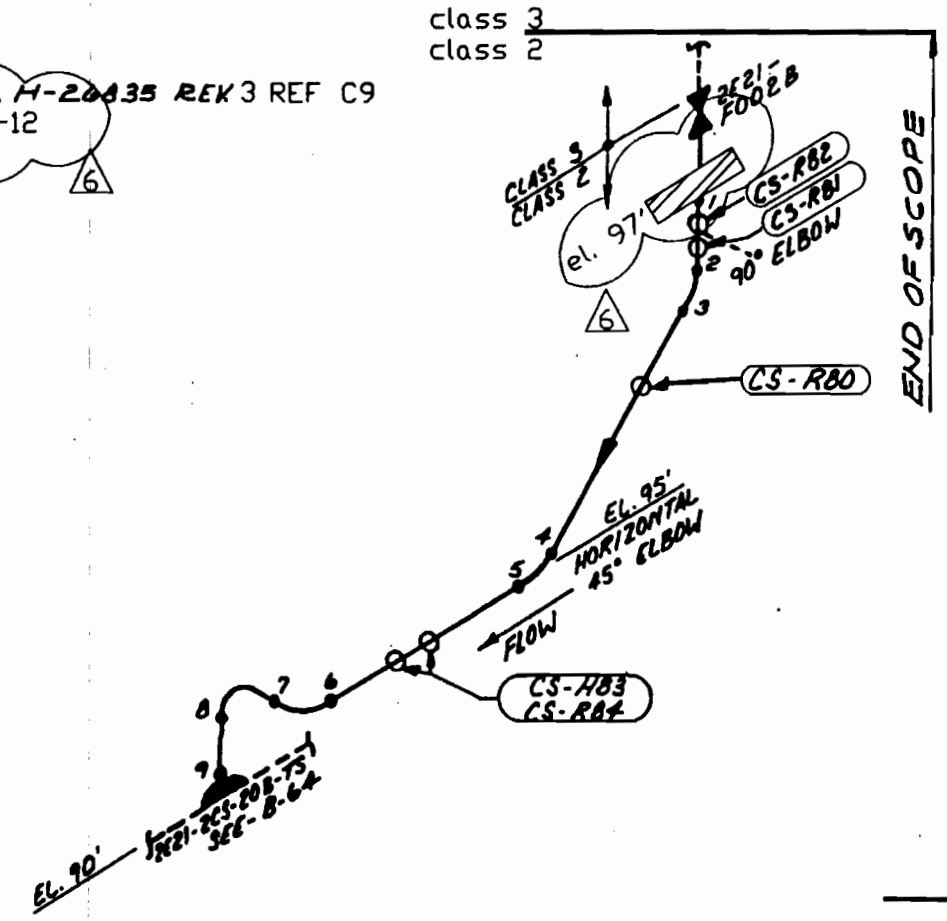

SUCTION FROM COND. STOR. - B LOOP
2E21-2CS-14B-CTS
CORE SPRAY SYSTEM
HATCH 2, CLASS 2

LOCATION: S.E. DIAGONAL
NOTE:
ALL DEVICE NUMBERS PRECEDED BY 2E21.

FIGURE B-60B

REV.	DATE	BY	CHK'D	APPR. 1
6	1-05-01	RPW	BKJ	DRG
4	6/25/96	WS	KEW	WHC
3	11-30-90	WJGS	WS	WHC
5	6-28-99	RPW	BKJ	DRG

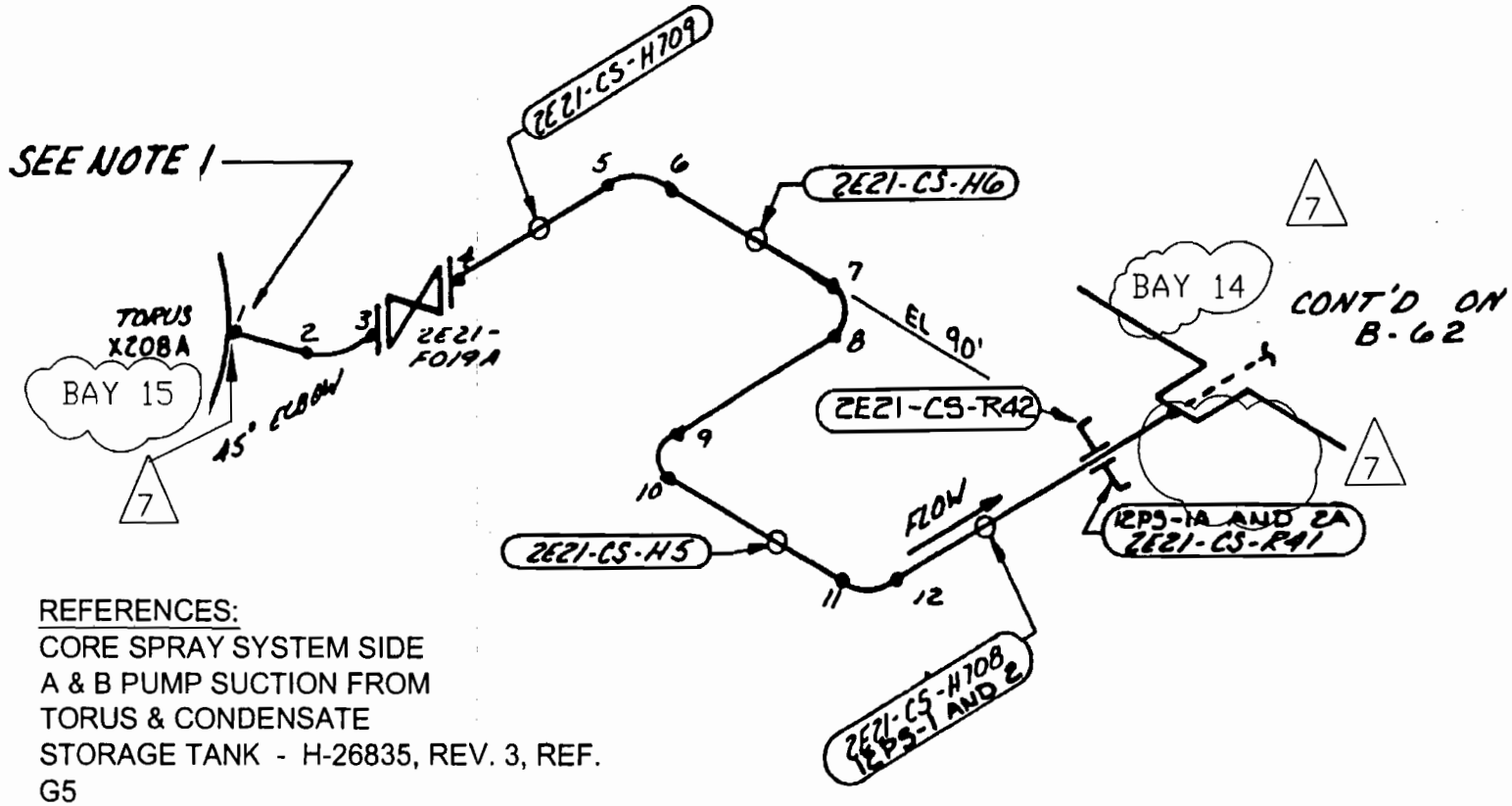

REFERENCES:
CORE SPRAY SYSTEM SIDE
A & B PUMP SUCTION FROM
TORUS & CONDENSATE
STORAGE TANK - H-26835, REV. 3, REF.
G5

NOTES:
1. FOR DETAILED INFORMATION
SEE FIGURE B-93.

PUMP SUCTION - A LOOP
2E21-2CS-20A-TS
CORE SPRAY SYSTEM
HATCH 2, CLASS 2

LOCATION: TORUS AT 87' LEVEL

FIGURE B-61

Rev.	Date	By	CHK'D	APP.1
7	9-27-04	SM	MB	DDS

REFERENCES:

CORE SPRAY SYSTEM SIDE
A & B PUMP SUCTION FROM
TORUS & CONDENSATE
STORAGE TANK - - - - - H-26835 REV. 3
REF G4

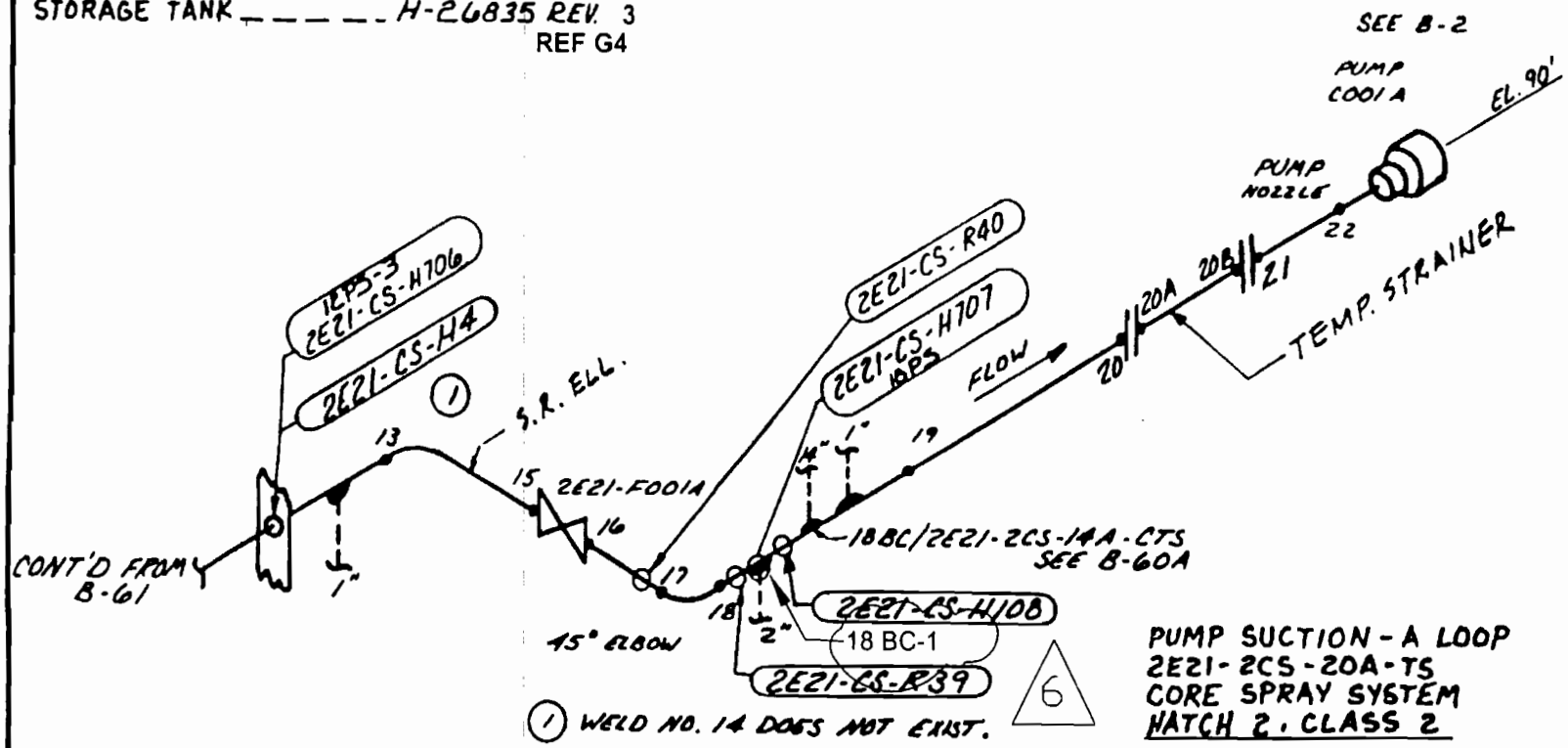

1 WELD NO. 14 DOES NOT EXIST.

PUMP SUCTION - A LOOP
2E21-2CS-20A-TS
CORE SPRAY SYSTEM
HATCH 2, CLASS 2

LOCATION: NE DIAGONAL

REV	DATE	BY	CHK'D	APPR. 1
5	6-28-99	RPW	BKJ	DRG
4	11-30-90	WGS	WS	WHC
3	4-13-91	BST	[illegible]	[illegible]
6	9-27-04	SM	MB	ODS

FIGURE B-62

REFERENCES:

CORE SPRAY SYSTEM SIDE
A & B PUMPS SUCTION FROM
TORUS & CONDENSATE
STORAGE TANK _ _ H-26835 REV.3, REF H-8

H-26118 REV.12 REF D-11
S-15520 REV.B

NOTES:

1. FOR DETAILED INFORMATION SEE FIGURE B-93

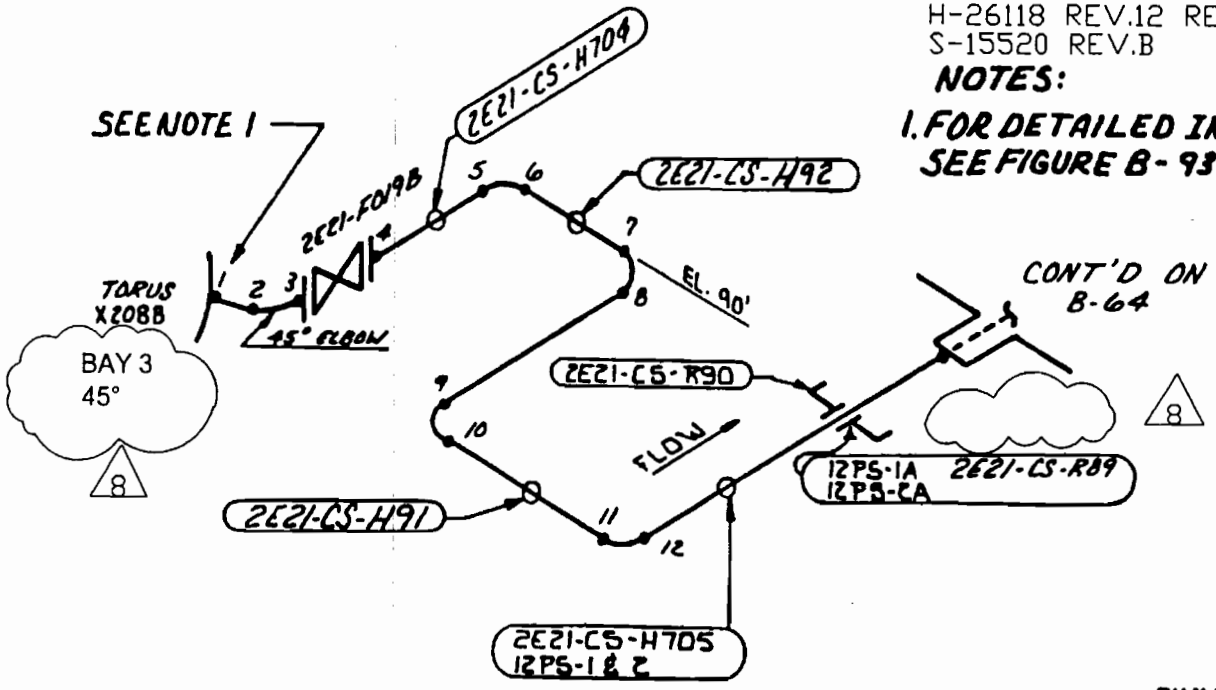

PUMP SUCTION - B LOOP
2E21-2CS-20B-TS
CORE SPRAY SYSTEM
HATCH 2, CLASS 2

LOCATION: TORUS AT 87' LEVEL

S.E. DIAG

FIGURE B-63

8	9-27-04	SM	MB	DDS
Rev.	Date	By	CHK'D	APP.1

REFERENCES:

CORE SPRAY SYSTEM SIDE
A & B PUMP SUCTION FROM
TORUS & CONDENSATE
STORAGE TANK — — — H-26835 REV.3
REF G-10

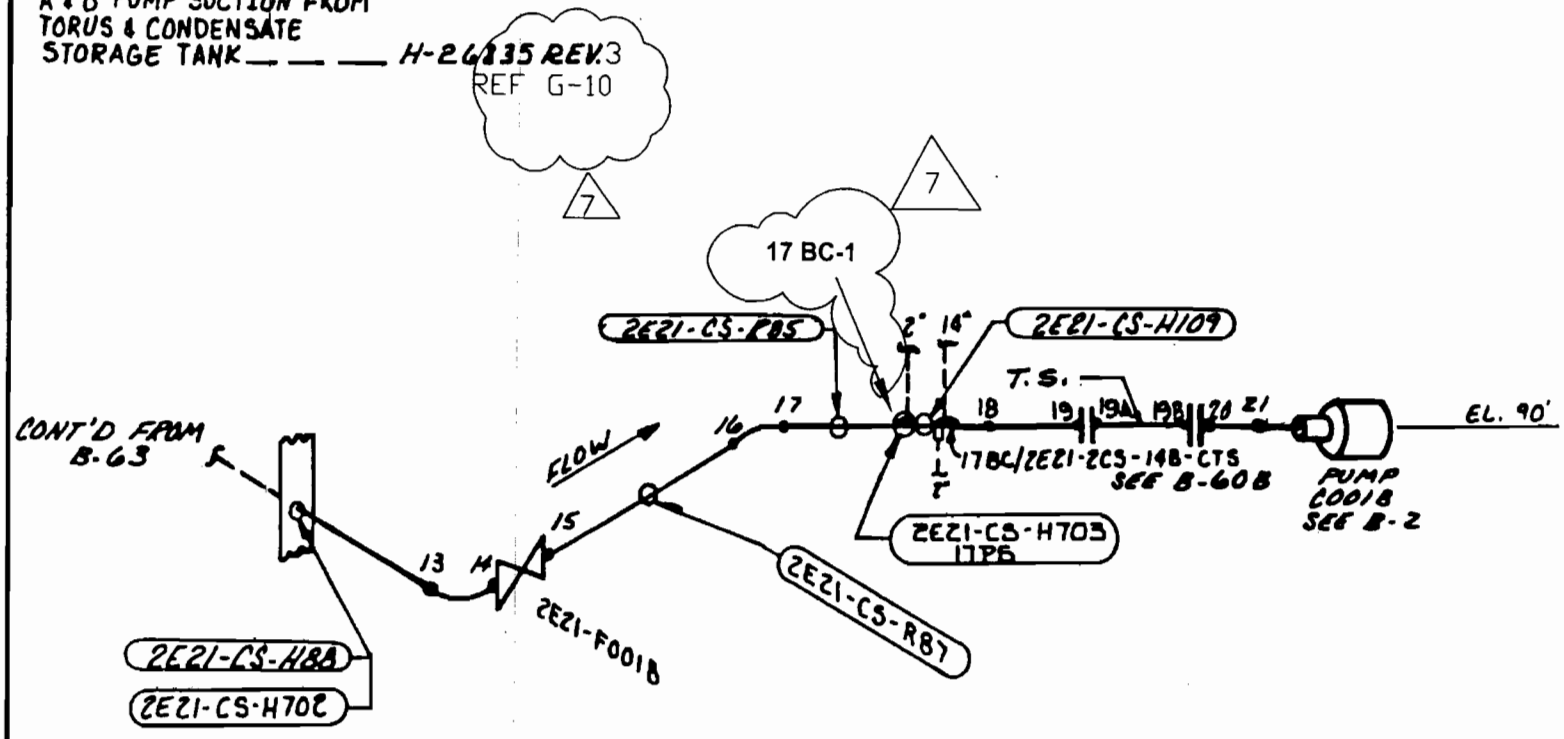

PUMP SUCTION - B LOOP
2E21-2CS-20B-TS
CORE SPRAY SYSTEM
HATCH 2, CLASS 2

LOCATION: S.E. DIAGONAL

REV	DATE	BY	CHK'D	APPR. 1
6	6-28-99	RPW	BKJ	DRG
4	11-30-90	WGS	WS	WHC
7	9-27-04	SM	MB	OOS
5	6-12-91	WGS	WS	WHC

FIGURE B-64

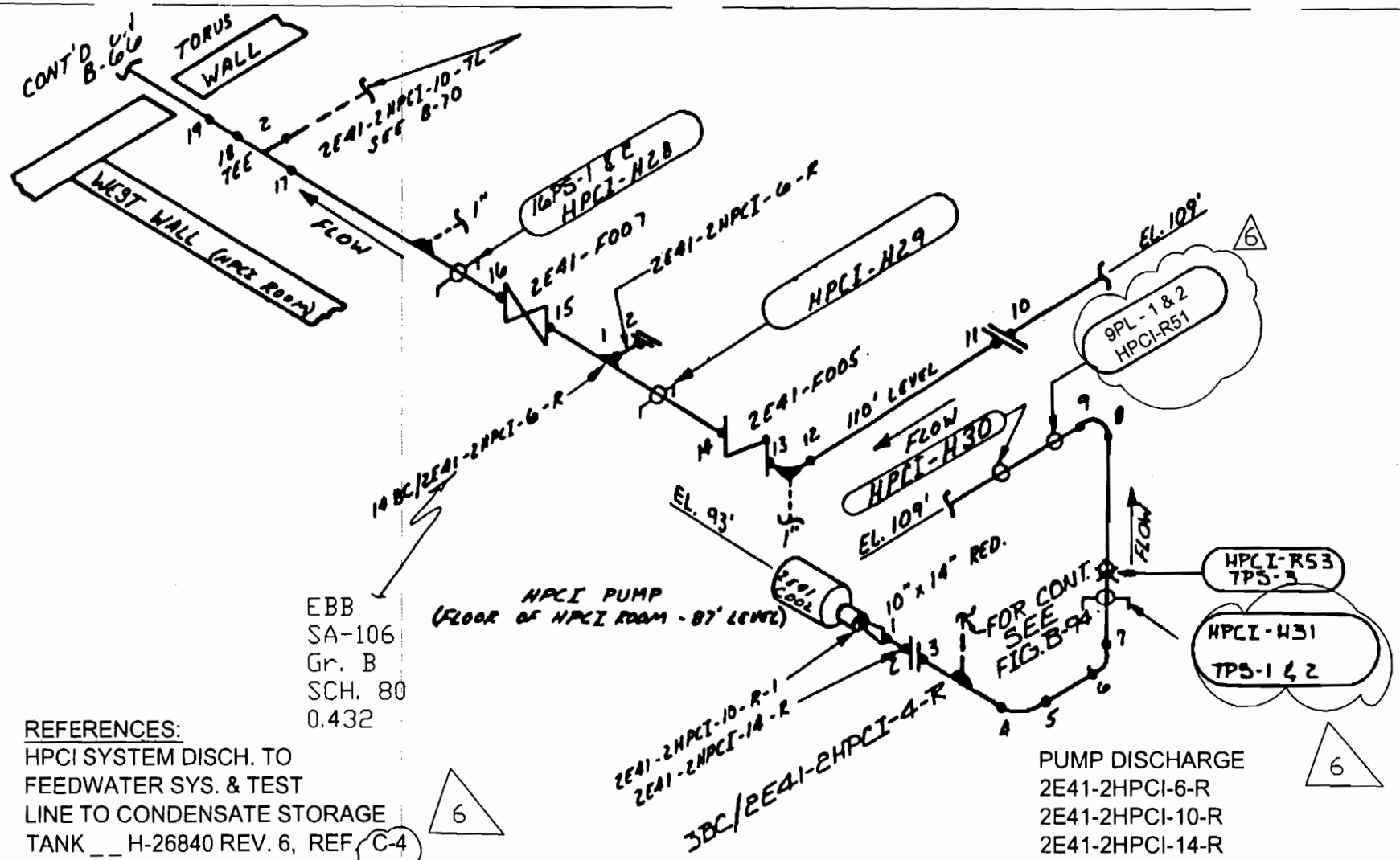

REFERENCES:
HPCI SYSTEM DISCH. TO FEEDWATER SYS. & TEST LINE TO CONDENSATE STORAGE TANK __ H-26840 REV. 6, REF C-4

FIGURE B-65

PUMP DISCHARGE
2E41-2HPCI-6-R
2E41-2HPCI-10-R
2E41-2HPCI-14-R
HIGH PRESSURE COOLANT INJECTION SYSTEM
HATCH 2, CLASS 2

LOCATION: HPCI TURBINE ROOM
NOTE: ALL DEVICE NUMBERS ARE PRECEDED BY 2E41

6	9-27-04	TAS	MB	ODS
Rev.	Date	By	CHK'D	APP.1

REFERENCES:

HPCI SYSTEM DISCH. TO FEEDWATER SYS. & TEST LINE TO CONDENSATE STORAGE TANK — — — H-26840 REV. 6
REF D-3

H-26855 REV. 3

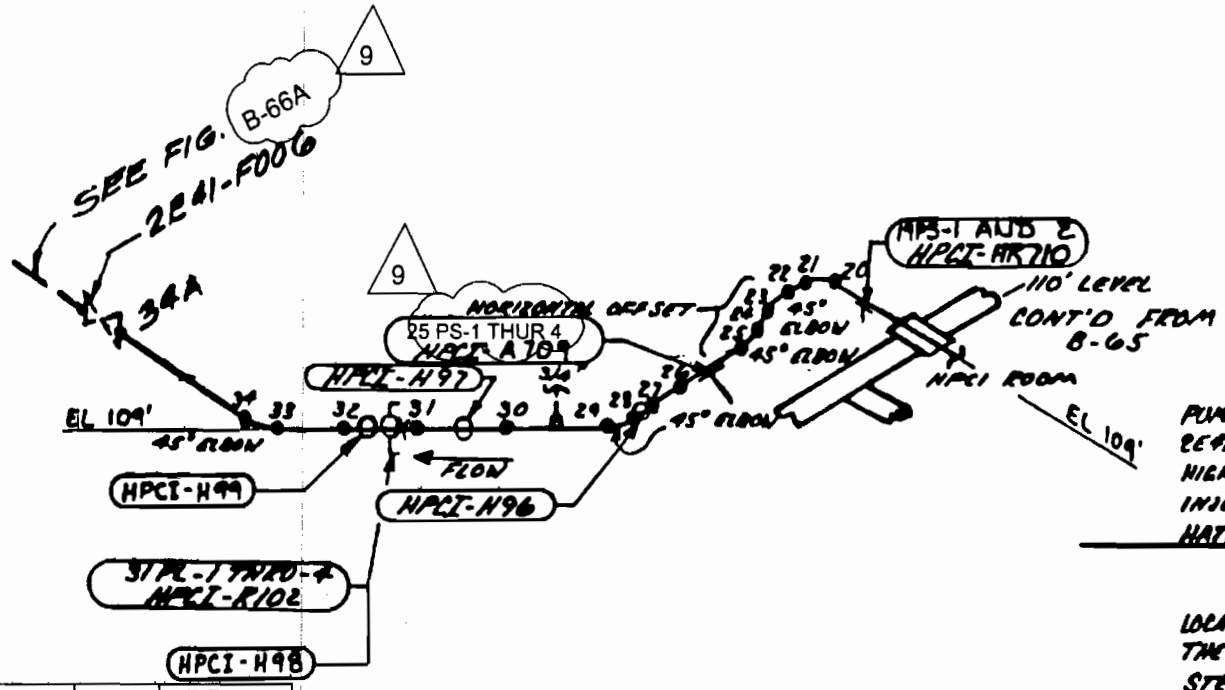

PUMP DISCHARGE
2E41-2HPCI-14-R
HIGH PRESSURE COOLANT INJECTION SYSTEM
HATCH 2, CLASS 2

LOCATION: ALONG SIDE AND ABOVE THE TORUS AND IN THE MAIN STEAM CHASE AREA.
NOTE:
ALL DEVICE NUMBERS PRECEDED BY 2E41

REV.	DATE	BY	CHK'D	APPR. 1
8	6-28-99	RPW	BKJ	DRG
7	7-31-99	WJS	REN	WHC
6	10-1-92	WJS	WC	[illegible]
9	9-27-04	TAS	MB	MDS

FIGURE B-66

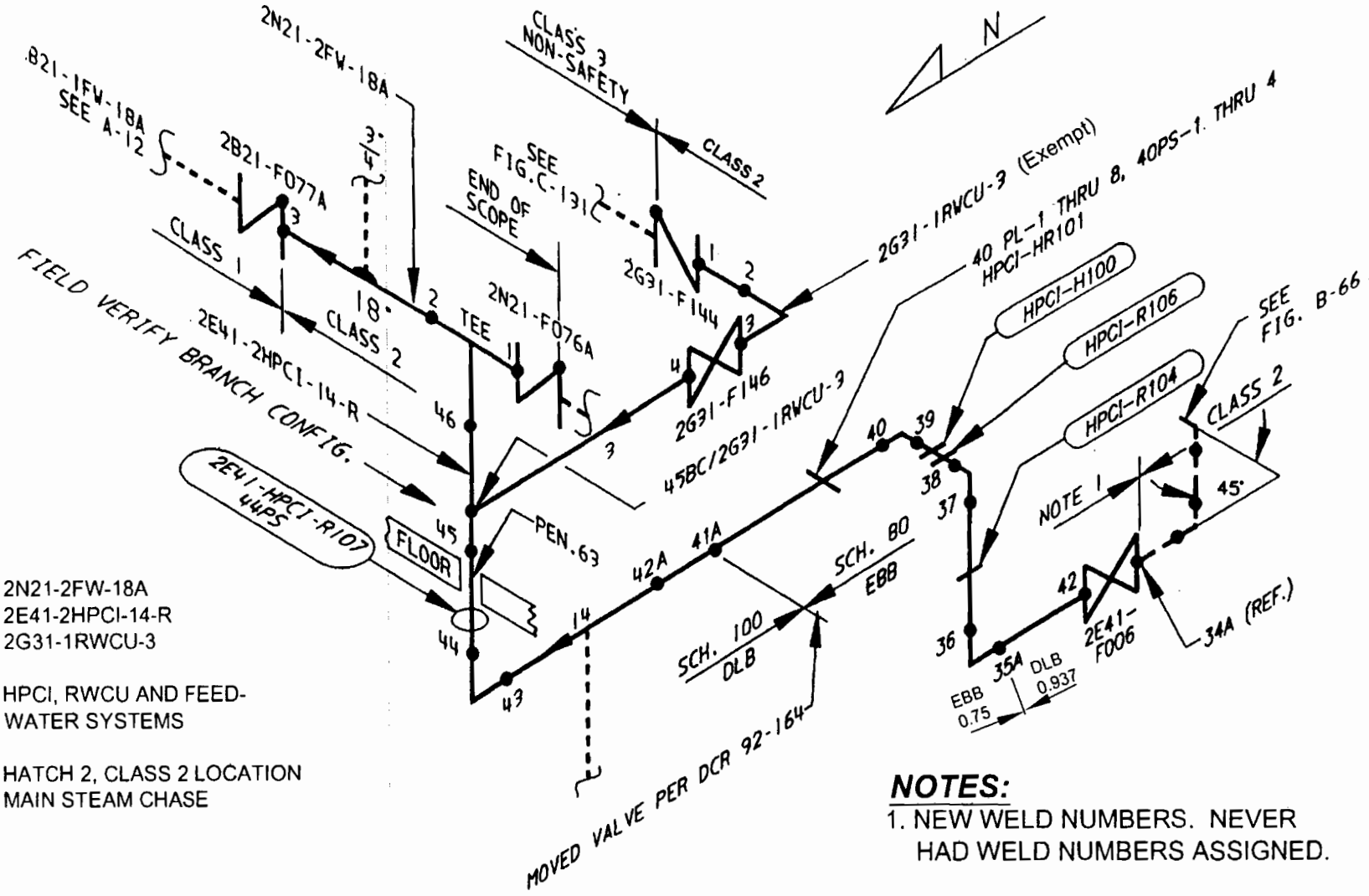

2N21-2FW-18A
2E41-2HPCI-14-R
2G31-1RWCU-3

HPCI, RWCU AND FEED-WATER SYSTEMS

HATCH 2, CLASS 2 LOCATION
MAIN STEAM CHASE

0	9-27-04	TAS	MB	005
REV	DATE	BY	CHK'D	APPR.1

FIGURE B-66A

NOTES:

1. NEW WELD NUMBERS. NEVER HAD WELD NUMBERS ASSIGNED.

2. REFERENCE ISOMETRICS-
   H-26800 REV. 1
   H-26840 REV. 6
   H-26855 REV. 3

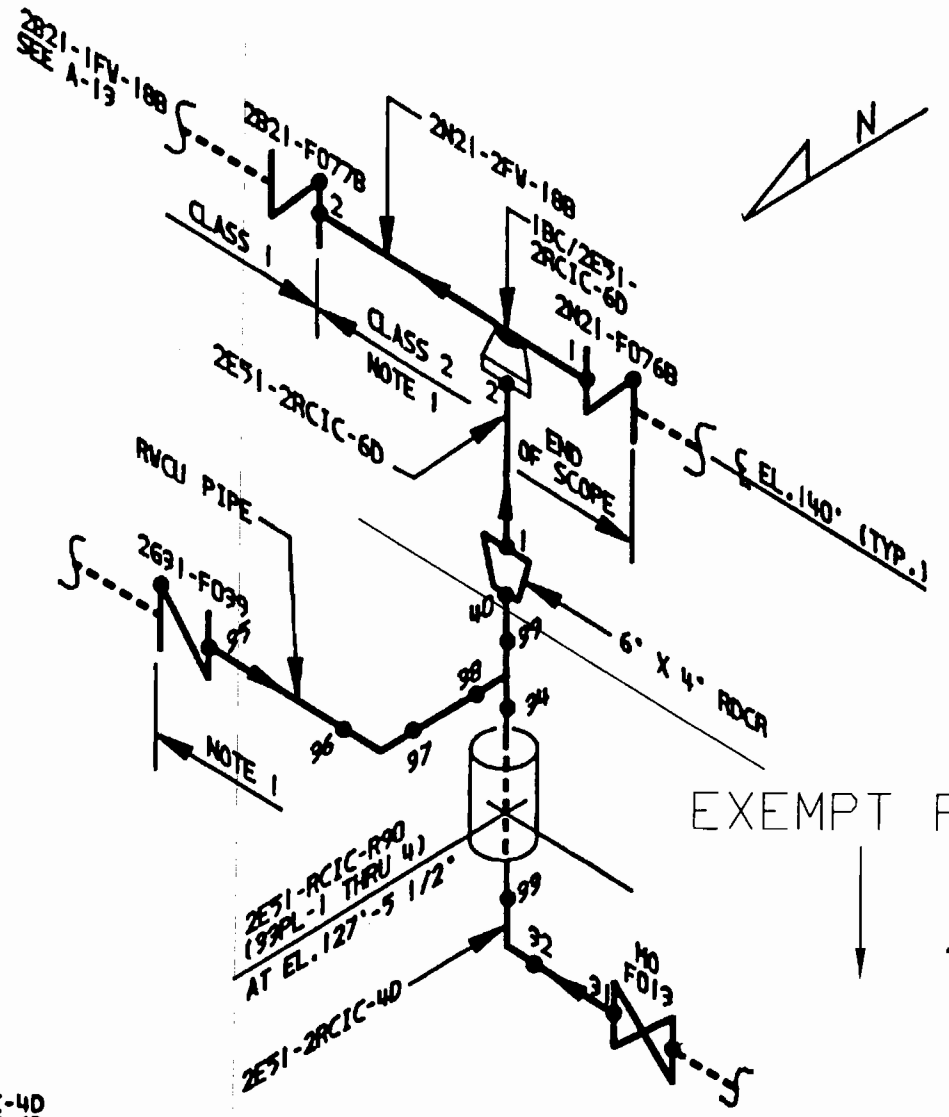

NOTES:

1. RWCU PIPE HAS RCIC WELD/LINE IDENTIFICATION NUMBERS.
2. REFERENCE ISOMETRICS-
   H-26845 REV. 2
   H-26855 REV. 1
   H-26800 REV. 1

2E51-2RCIC-4D
2E51-2RCIC-6D
2N21-2FV-188

LOCATION: MAIN STEAM CHASE

REV	DATE	BY	CHK'D	APPR.1
0	9-27-04	SM	MB	OOS

FIGURE B-66B

SEE FIG. B-91

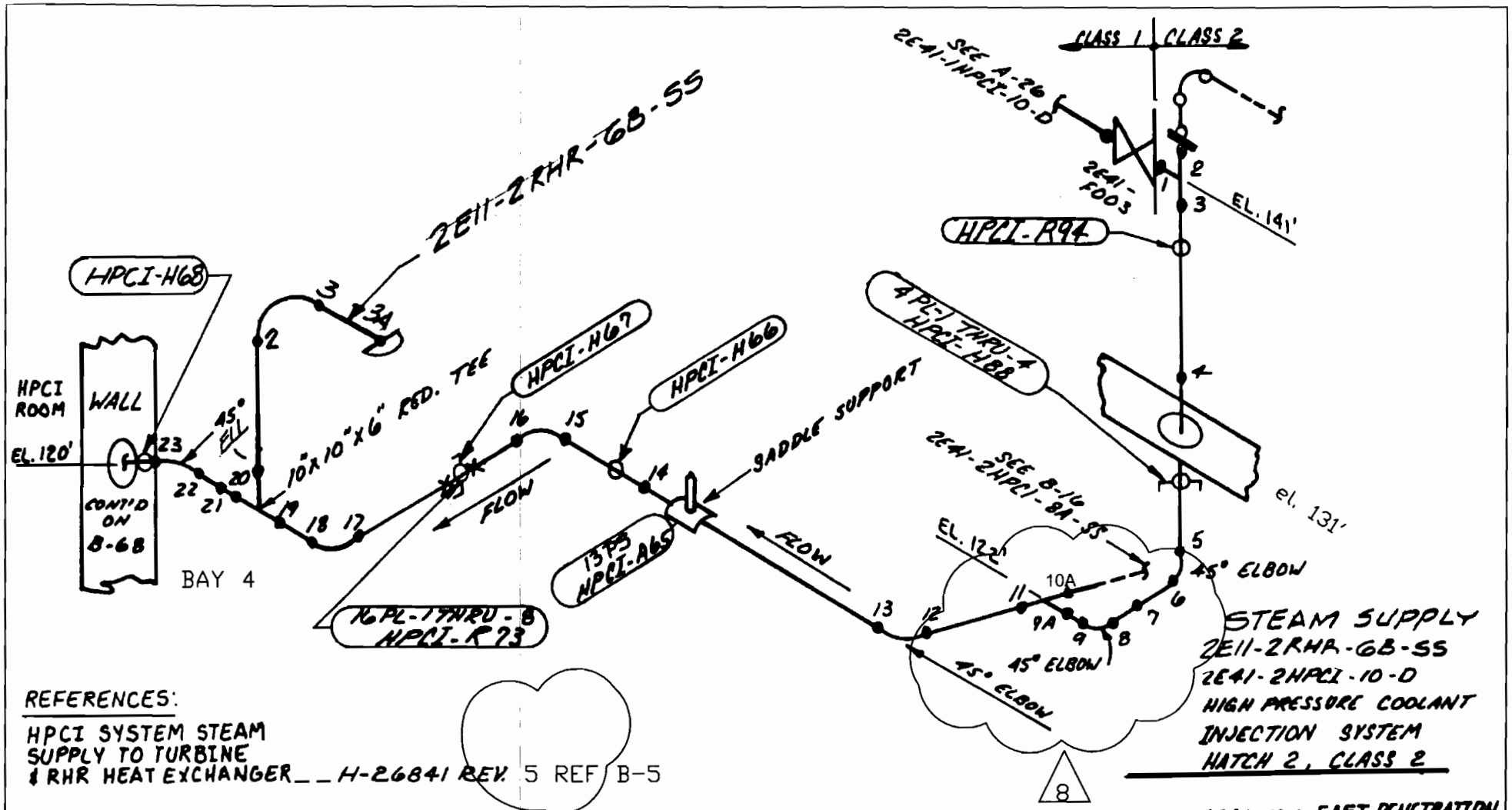

Rev.	Date	By	CHK'D	APP.1
8	8-11-06	SM	JCO	DDS
7	10-18-04	TAS	MB	DDS

FIGURE B-67

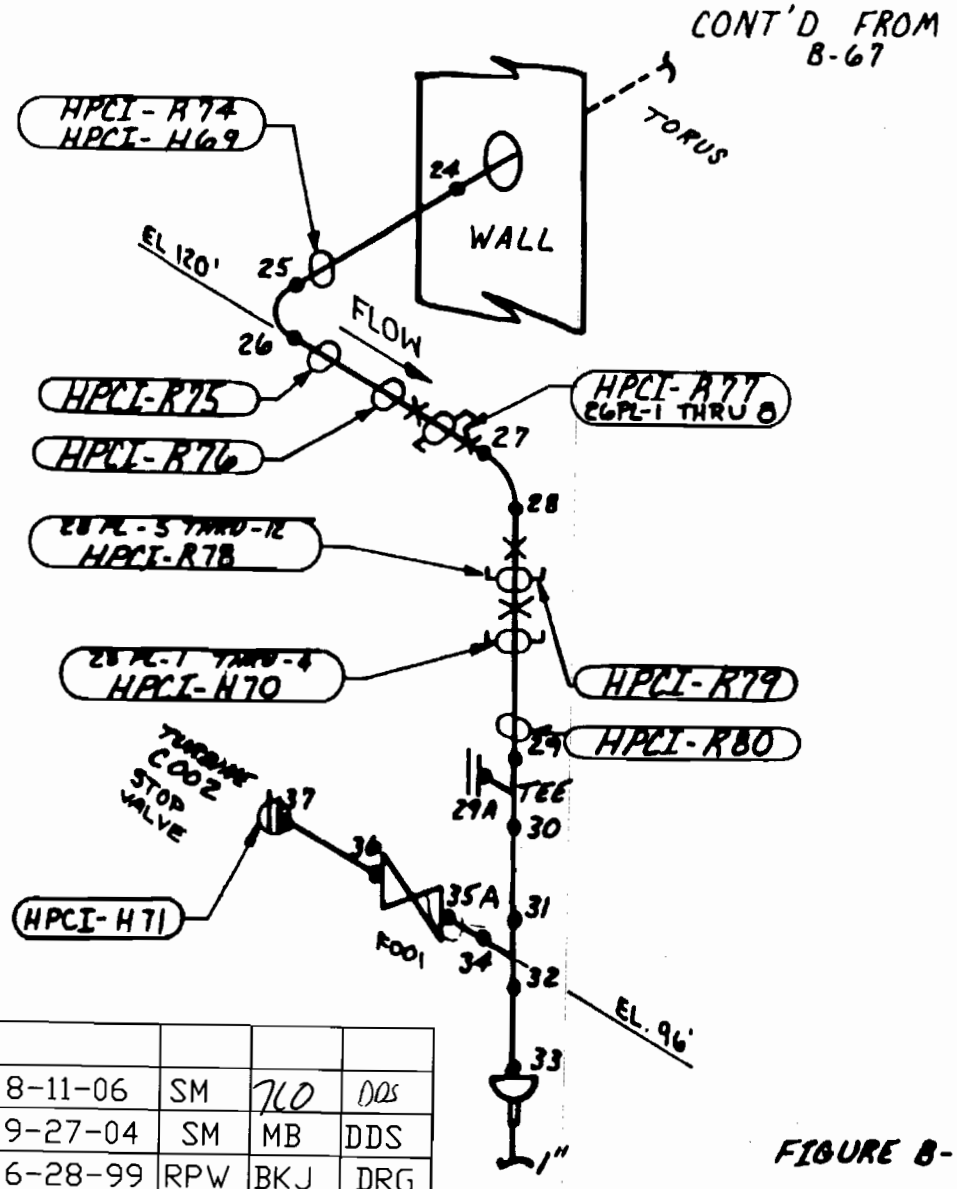

REFEFENCES:

HPCI SYSTEM STEAM SUPPLY TO TURBINE & RHR. HEAT EXCHANGER — H-26841 REV. 5 REF E-10 (8)

STEAM SUPPLY
2E41-2HPCI-10-D
HIGH PRESSURE COOLANT INJECTION SYSTEM
HATCH 2, CLASS 2

LOCATION: HPCI TURBINE ROOM
NOTE:
ALL DEVICE NUMBERS PRECEDED BY 2E41

FIGURE B-68

Rev.	Date	By	CHK'D	APP.1
8	8-11-06	SM	7LO	DDS
7	9-27-04	SM	MB	DDS
6	6-28-99	RPW	BKJ	DRG

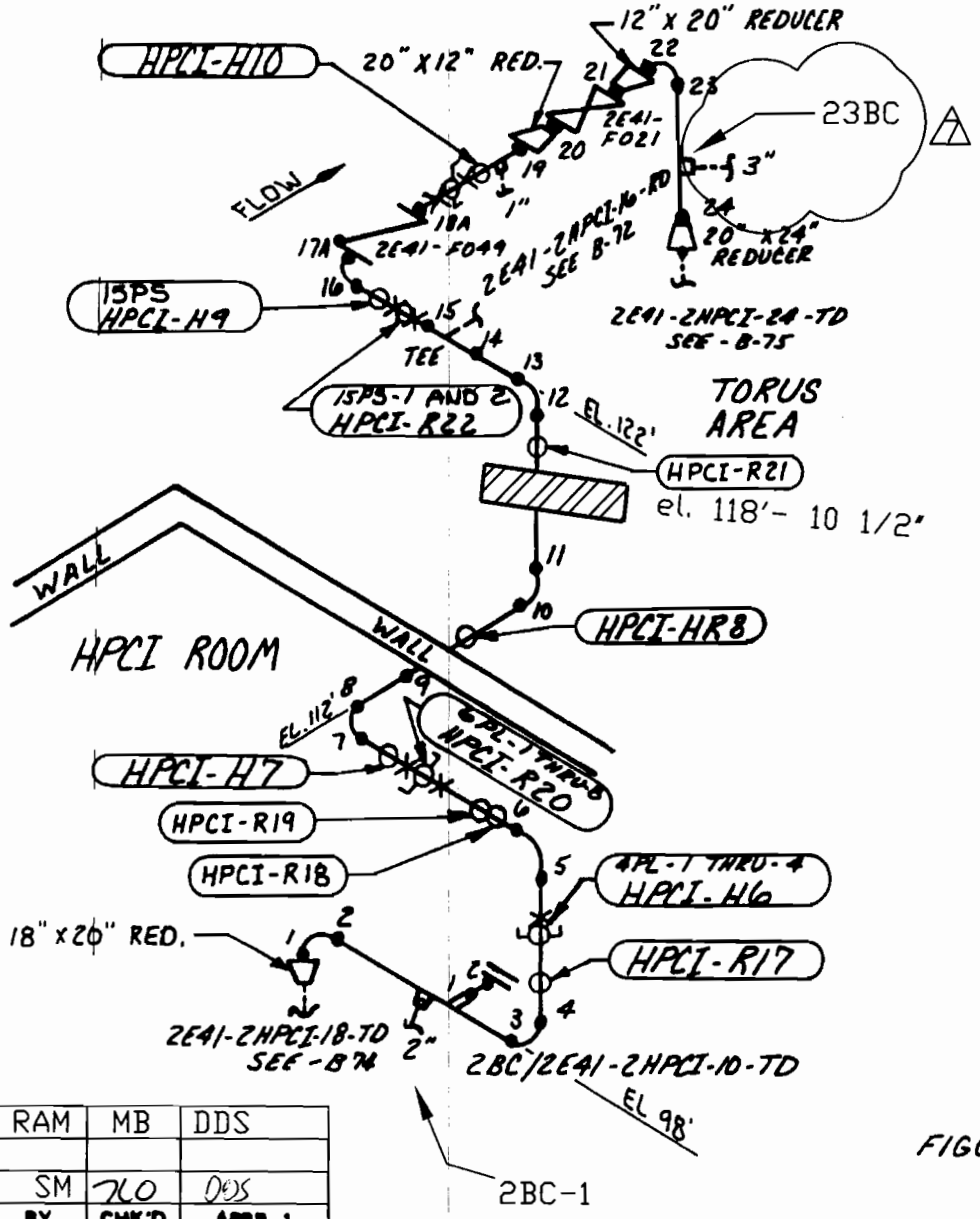

REFERENCES:

HPCI SYSTEM TURBINE EXHAUST TO TORUS — — — 2E41-103 (H-26842) REV. 0 REF D-6

H-26275 REV.11 REF G-11

TURBINE EXHAUST
2E41-2HPCI-12-TD
2E41-2HPCI-10-TD
2E41-2HPCI-20-TD
HIGH PRESSURE COOLANT INJECTION SYSTEM
HATCH 2, CLASS 2

LOCATION: HPCI TURBINE ROOM AND ABOVE TORUS
SOUTH AREA

NOTE:
ALL DEVICE NUMBERS PRECEDED BY 2E41

FIGURE B-69

REV.	DATE	BY	CHK'D	APPR. 1
6	10-12-04	RAM	MB	DDS
7	11-20-06	SM	7LO	DDS

REFERENCES:

HPCI SYSTEM DISCH. TO FEEDWATER SYS. & TEST LINE TO CONDENSATE STORAGE TANK — — — — H-26840 REV.6
REF C3

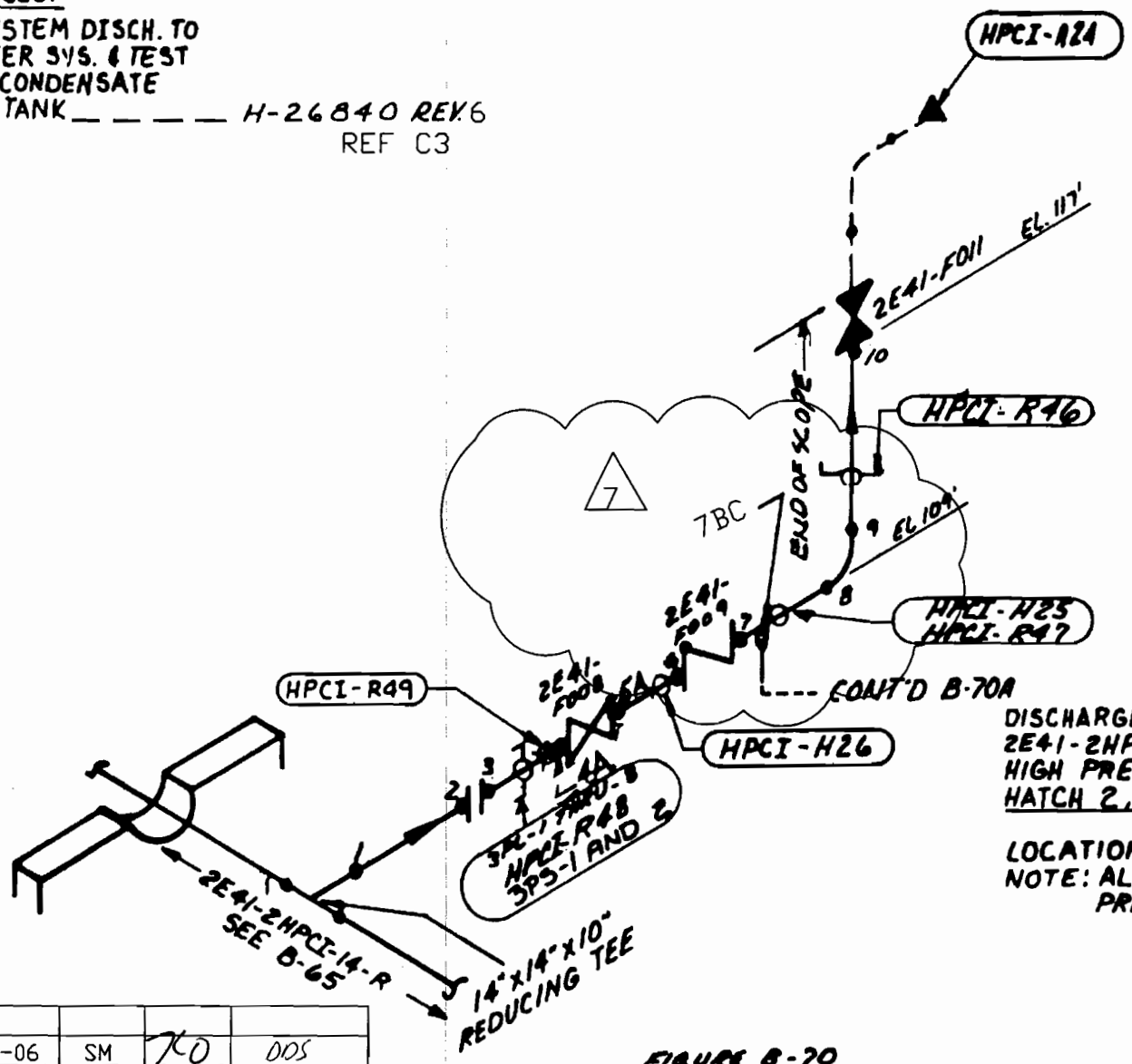

DISCHARGE TO COND. STORAGE
2E41-2HPCI-10-TL
HIGH PRESSURE COOLANT INJECTION SYS.
HATCH 2, CLASS 2

LOCATION: HPCI TURBINE ROOM
NOTE: ALL DEVICE NUMBERS PRECEDED BY 2E41

FIGURE B-70

7	11-20-06	SM	KO	DDS
6	6-28-99	RPW	BKJ	DRG
Rev.	Date	By	CHK'D	APP.1

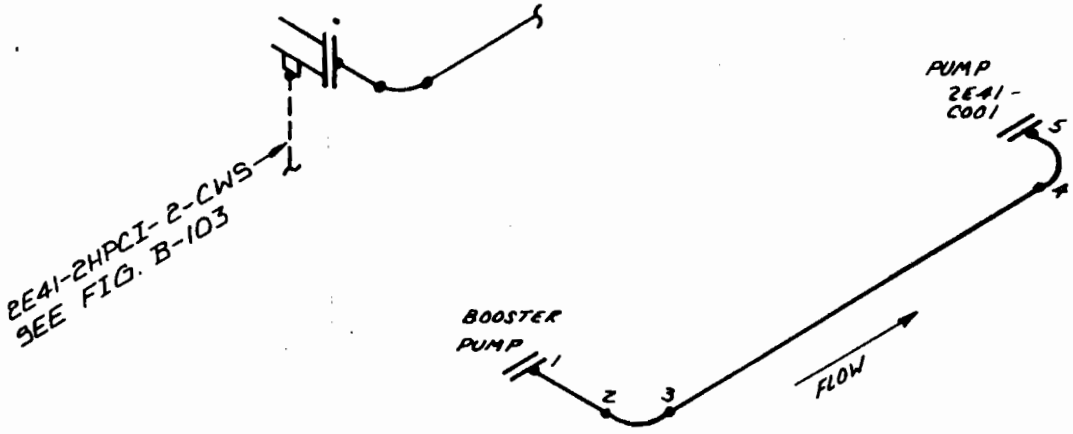

HPCI PUMP CROSSOVER
2E41-2HPCI-12-PC
HIGH PRESSURE COOLANT
INJECTION SYSTEM
HATCH 2, CLASS 2

LOCATION: HPCI TURBINE ROOM

FIGURE B-71

REV	DATE	BY	CHK'D	APPR. 1
2	4-13-87	BST	BKG	[illegible]
1	3/2/87	BST	WS	MB

REFERENCES:
HPCI SYSTEM TURBINE
EXHAUST TO TORUS - H-26842
REV. 0

5

REF E-7

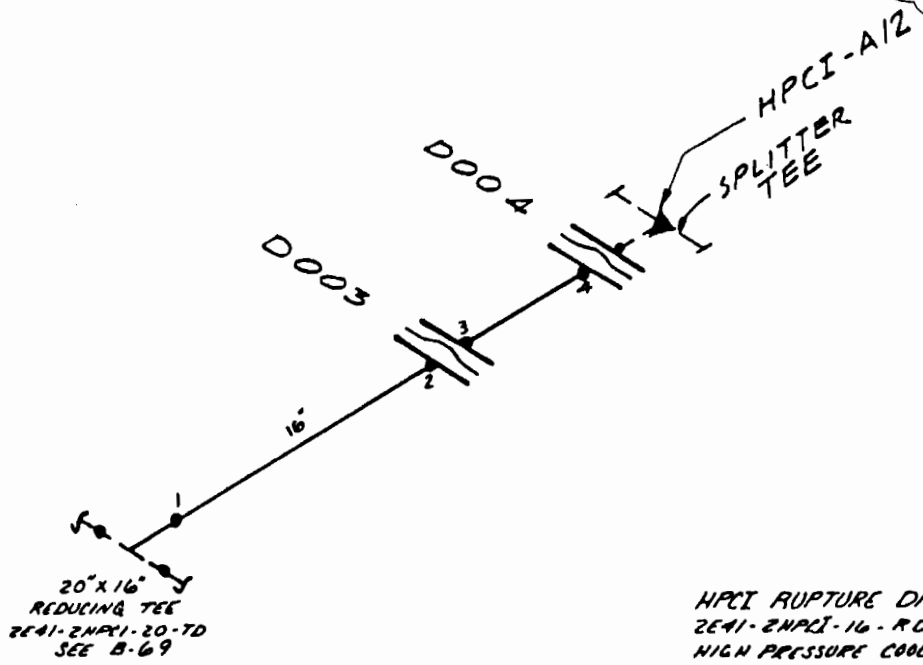

HPCI RUPTURE DISC
2E41-2NPCI-16-RD
HIGH PRESSURE COOLANT
INJECTION SYSTEM
HATCH 2 CLASS 2

LOCATION: ABOVE THE TORUS

REV.	DATE	BY	CHK'D	APPR 1
3	7/27/90	WGS	WC	RLD
5	9-27-04	SM	MB	DDS
4	11-30-90	WGS	WG	WHC

FIGURE B-72

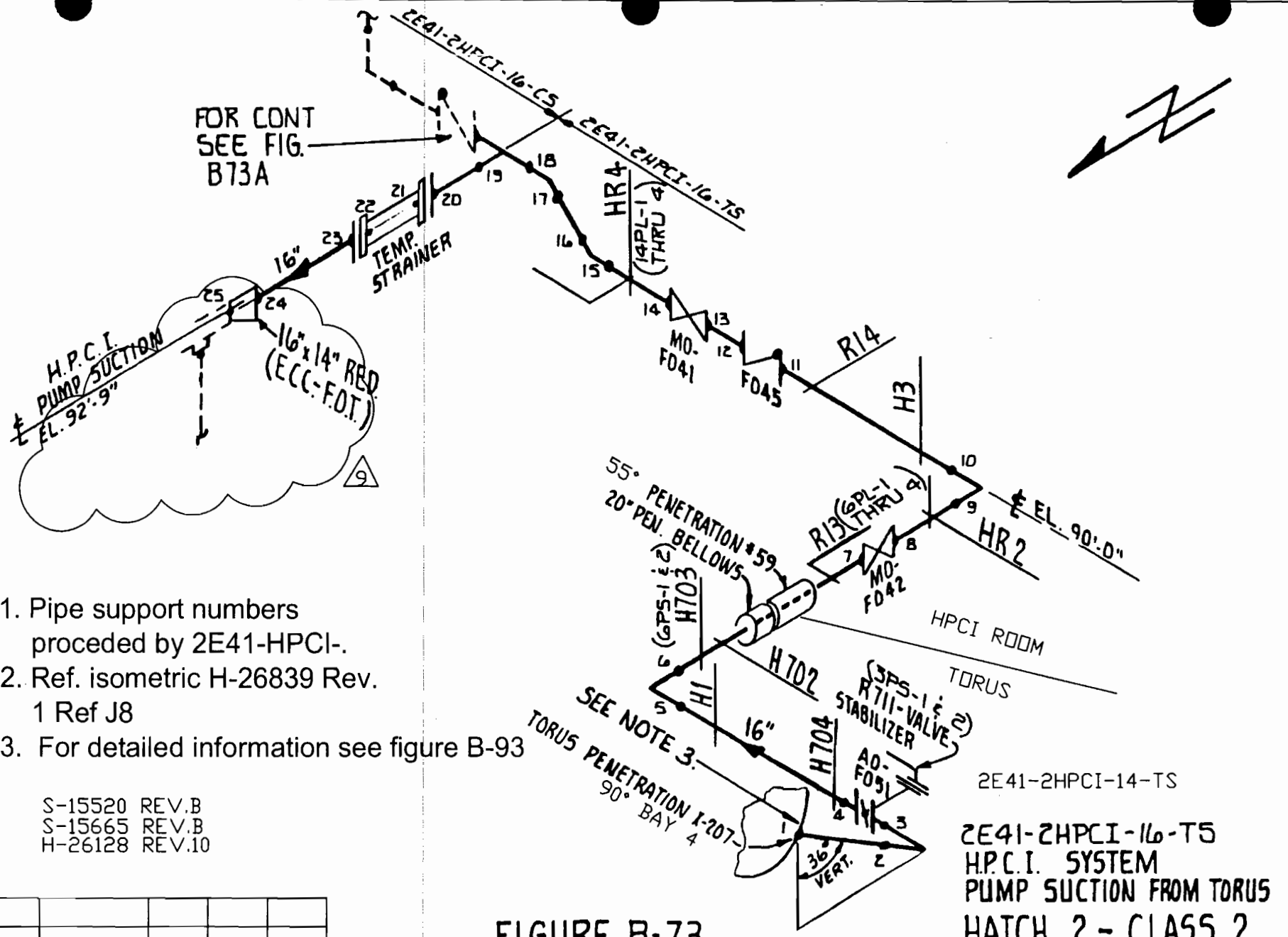

1. Pipe support numbers proceded by 2E41-HPCI-.
2. Ref. isometric H-26839 Rev. 1 Ref J8
3. For detailed information see figure B-93

S-15520 REV.B
S-15665 REV.B
H-26128 REV.10

Rev.	Date	By	CHK'D	APP.1
9	11-20-06	SM	760	DDS
8	9-27-04	SM	MB	DDS

FIGURE B-73

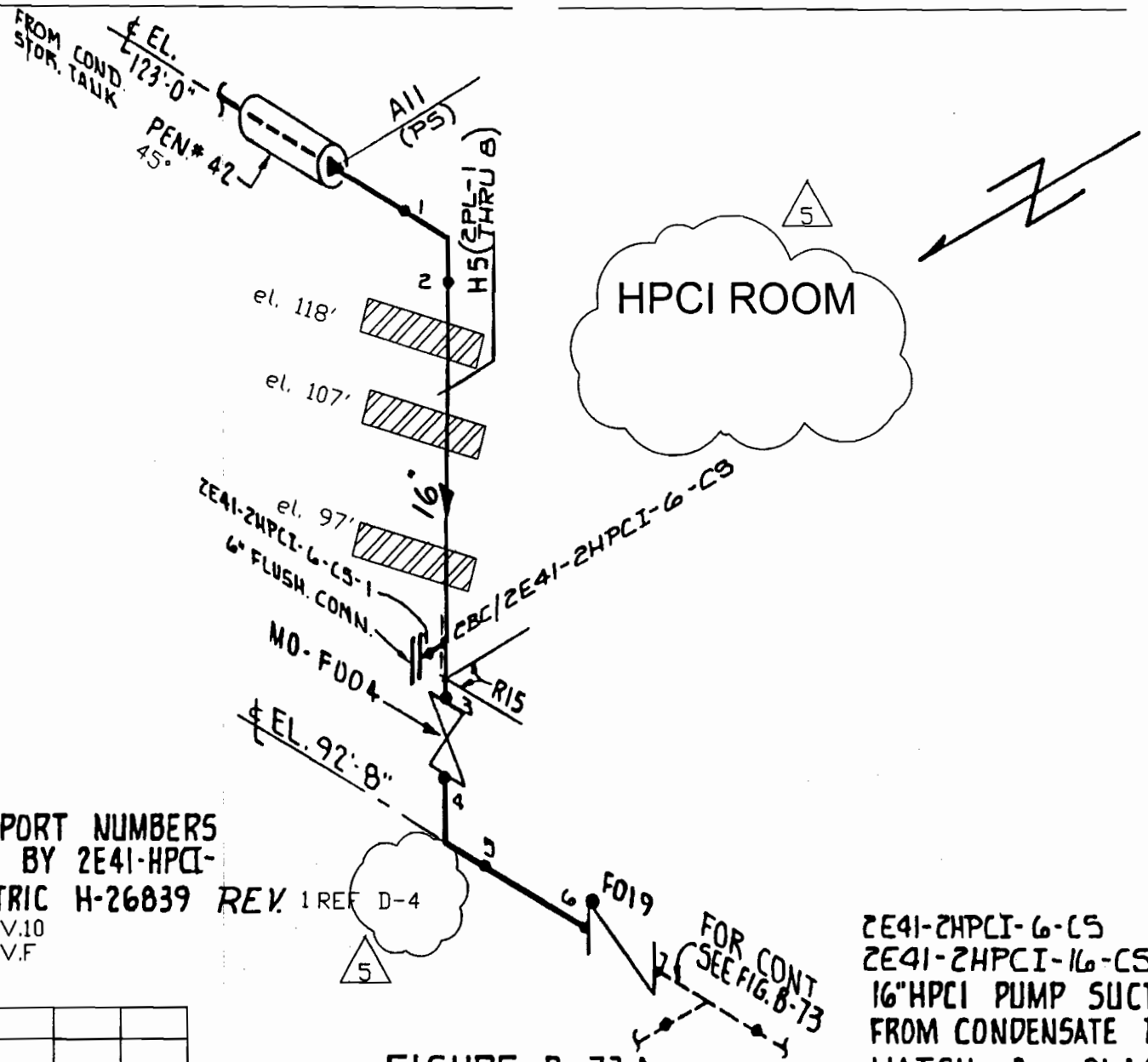

NOTES:

1. PIPE SUPPORT NUMBERS PRECEDED BY 2E41-HPCI-
2. REF. ISOMETRIC H-26839 REV. 1
   H-26128 REV.10
   S-15422 REV.F

2E41-2HPCI-6-CS
2E41-2HPCI-16-CS
16" HPCI PUMP SUCTION FROM CONDENSATE TANK
HATCH 2 - CLASS 2

FIGURE B-73 A

5 LOCATION: REACTOR BLDG. HPCI Diag TORUS AT 90'- LEVEL

Rev.	Date	By	CHK'D	APP.1
5	9-27-04	SM	MB	DDS

REFERENCES:

HPCI SYSTEM TURBINE EXHAUST TO TORUS --- 2E41-103, (H-26842), REV. 0

REF D-6

4

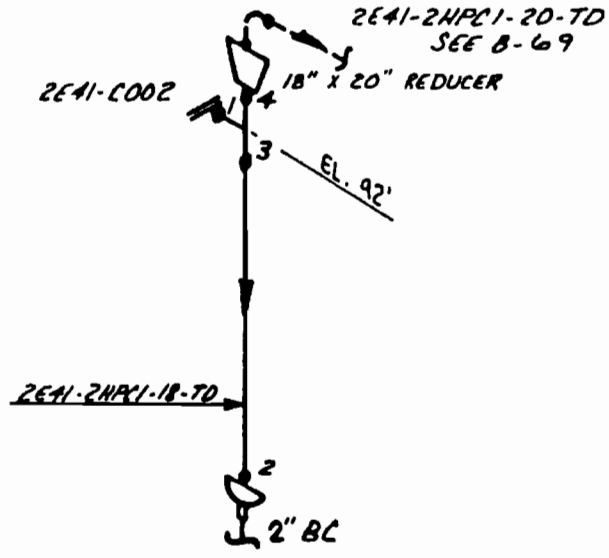

TURBINE EXHAUST
2E41-2HPCI-18-TD
HIGH PRESSURE COOLANT
INJECTION SYSTEM
HATCH 2, CLASS 2

LOCATION: HPCI ROOM

FIGURE B-74

REV.	DATE	BY	CHK'D	APPR. 1
4	9-27-04	SM	MB	DDS
3	11-30-90	WGS	WS	WHC
2	3/2/87	BST	WS	MB

REFERENCES:
HPCI SYSTEM TURBINE
EXHAUST TO TORUS --- 2E41-103 CH-26842), REV. 0 (REF. H-6)

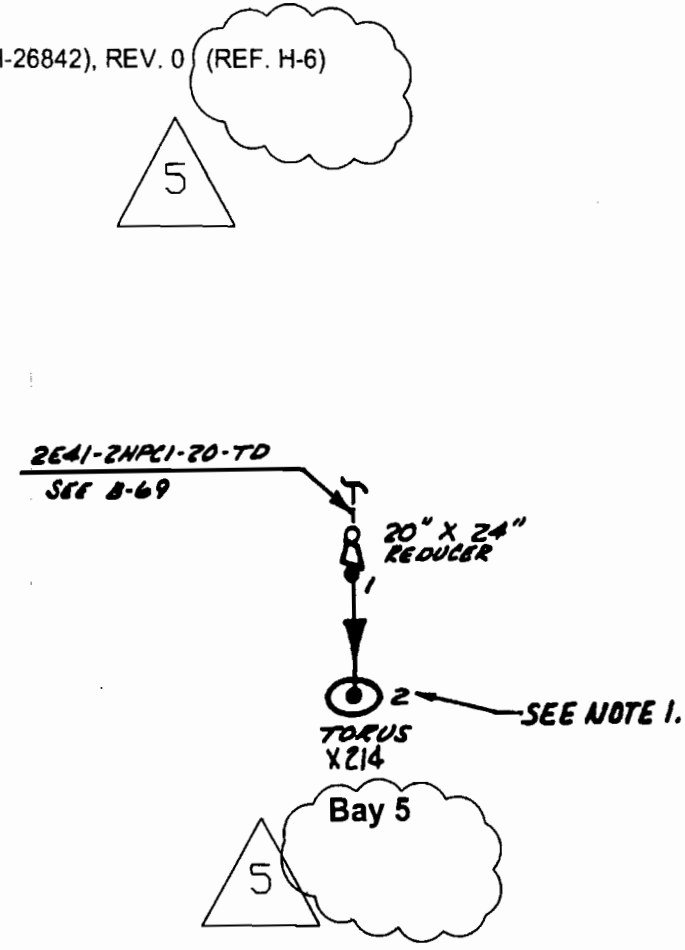

NOTES:

1. FOR DETAILED INFORMATION SEE FIGURE B-93.

TURBINE EXHAUST
2E41-2HPCI-24-TD
HIGH PRESSURE COOLANT
INJECTION SYSTEM
HATCH 2, CLASS 2

LOCATION: ABOVE THE TORUS

5	9-27-04	SM	MB	005
Rev.	Date	By	CHK'D	APP.1

FIGURE B-75

REFERENCES:

TORUS DRAINAGE & PURIFICATION SYS. — — H-268GO REV.0 REF B-2

5

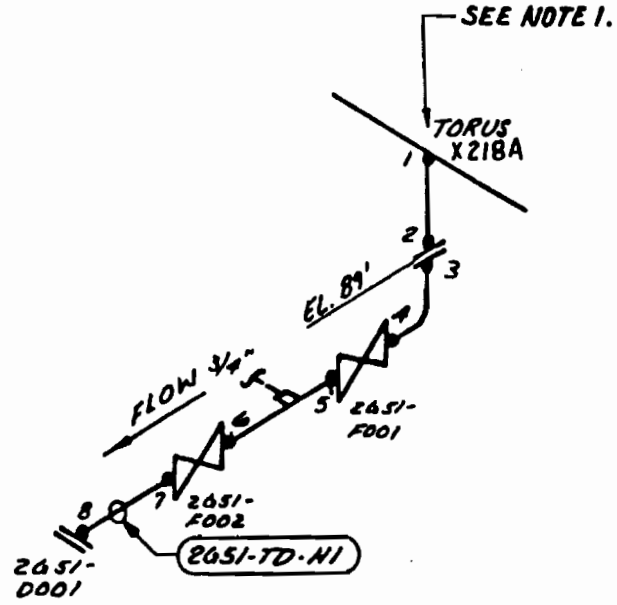

NOTES:

1. FOR DETAILED INFO. SEE FIGURE B-93.

TORUS DRAIN
2651-2TDP. B-D
TORUS DRAINAGE AND PURIFICATION SYSTEM
HATCH 2, CLASS 2

LOCATION: EXITS THE TORUS NEAR THE SW LADDER AT THE 87' LEVEL

REV	DATE	BY	CHK'D	APPR 1
4	11-30-90	WGS	WS	WHC
3	7/27/90	WGS	WC	RLD
5	9-27-04	SM	MB	DDS

FIGURE B-76

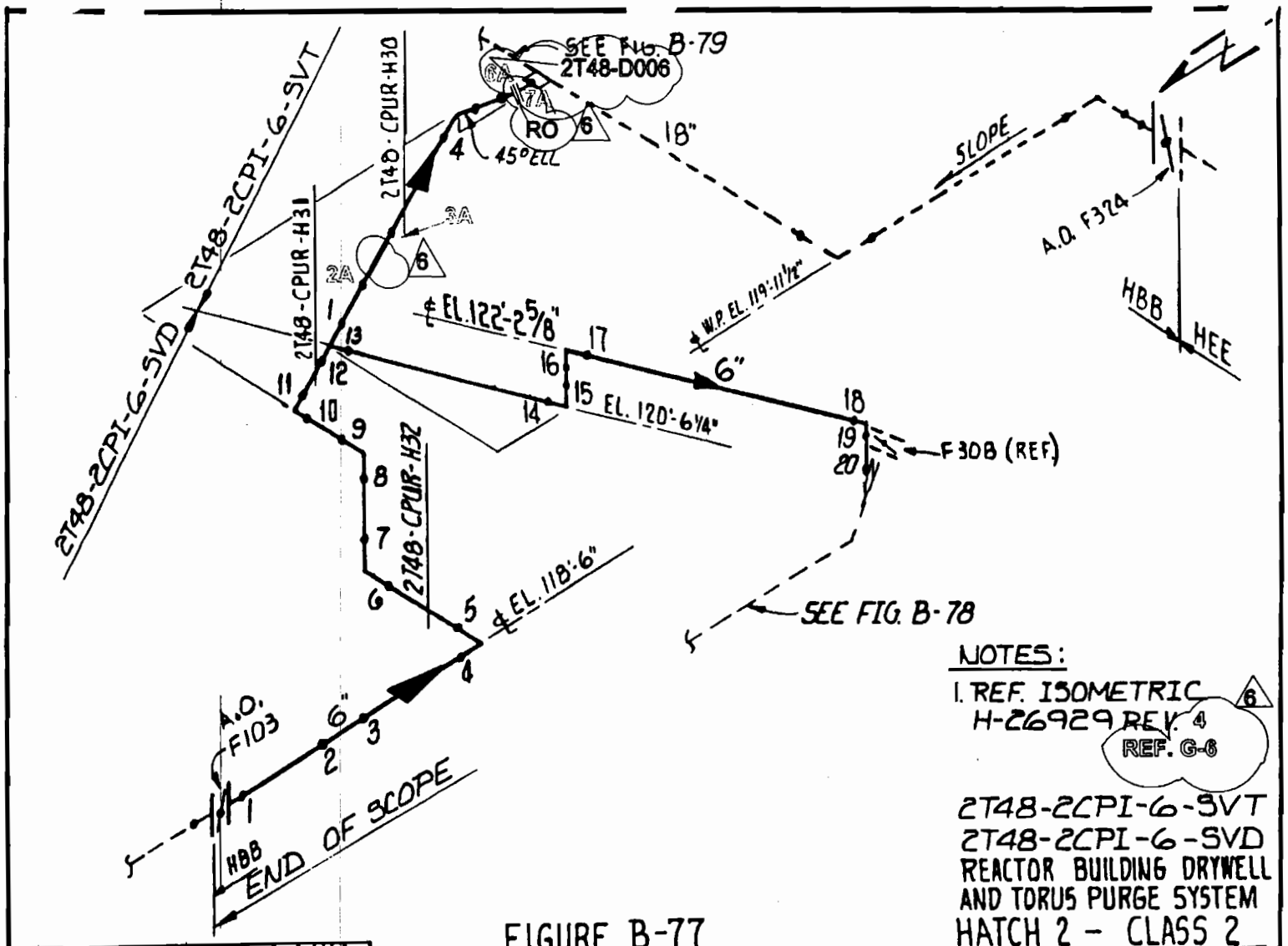

NOTES:

1. REF. ISOMETRIC H-26929 REV. 4 REF. G-6 (6)

2T48-2CPI-6-SVT
2T48-2CPI-6-SVD
REACTOR BUILDING DRYWELL AND TORUS PURGE SYSTEM
HATCH 2 - CLASS 2
LOCATION: ABOVE TORUS

FIGURE B-77

REV	DATE	BY	CHK'D	APPR.
4	11-30-90	WGS	WS	WHC
6	9-27-04	TAS	MB	DDS
5	9-23-92	WS	WC	DMS

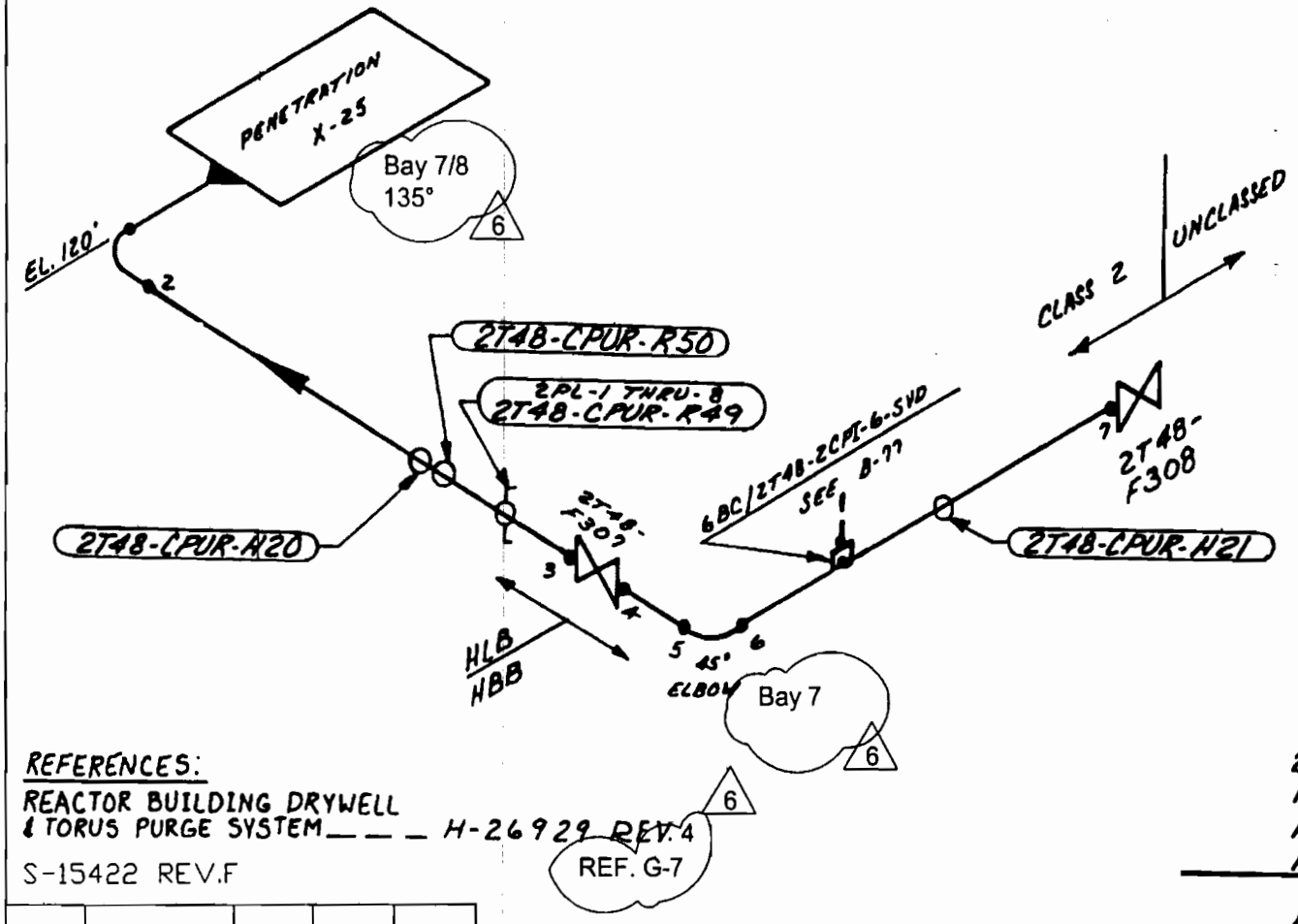

REFERENCES:

REACTOR BUILDING DRYWELL & TORUS PURGE SYSTEM — — — H-26929 REV.4

S-15422 REV.F

6

REF. G-7

2T48-2CPT-1B-PID
PRIMARY CONTAINMENT PURGE AND INERTING SYSTEM
HATCH 2, CLASS 2

LOCATION: ABOVE THE TORUS

S.W. AREA

6

6	9-27-04	TAS	MB	DDS
5	1-5-01	RPW	BKJ	DRS
Rev.	Date	By	CHK'D	APP.1

FIGURE B-78

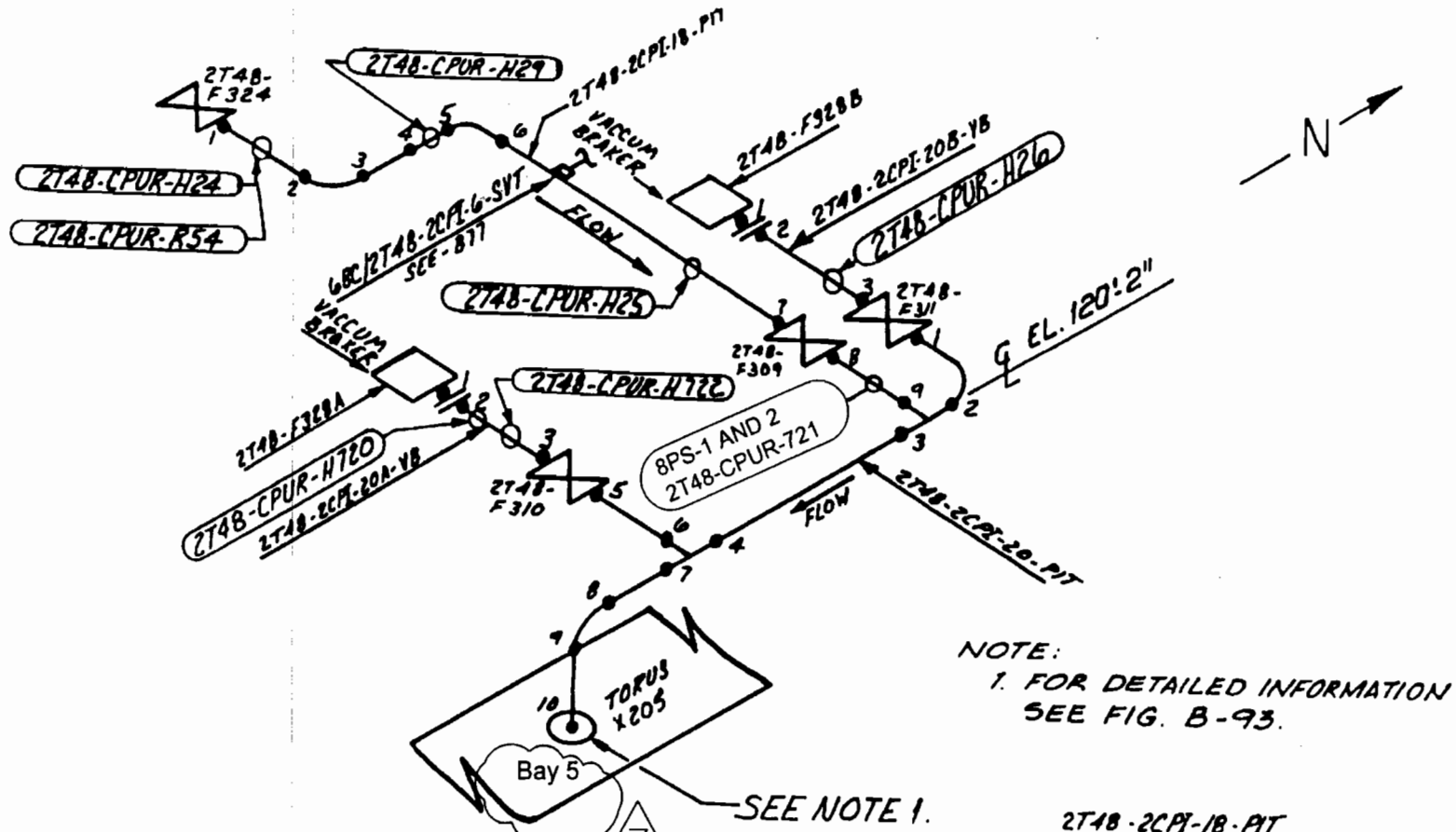

NOTE:
1. FOR DETAILED INFORMATION SEE FIG. B-93.

REFERENCES:
REACTOR BUILDING DRYWELL & TORUS PURGE SYSTEM - - - H-26929 REV. 4
REF C-7

2T48-2CPI-1B-PIT
2T48-2CPI-20-PIT
2T48-2CPI-20A-VB
2T48-2CPI-20B-VB
PRIMARY CONTAINMENT PURGE AND INERTING SYSTEM
HATCH 2, CLASS 2

LOCATION: ABOVE TORUS NEAR THE SOUTHEAST WALL

FIGURE B-79

7	9-27-04	SM	MB	DDS
Rev.	Date	By	CHK'D	APP.1

REFERENCE:
DRYWELL AND TORUS PURGE TO
STANDBY GAS SYSTEM H-26928, REV. 3
REF A-6

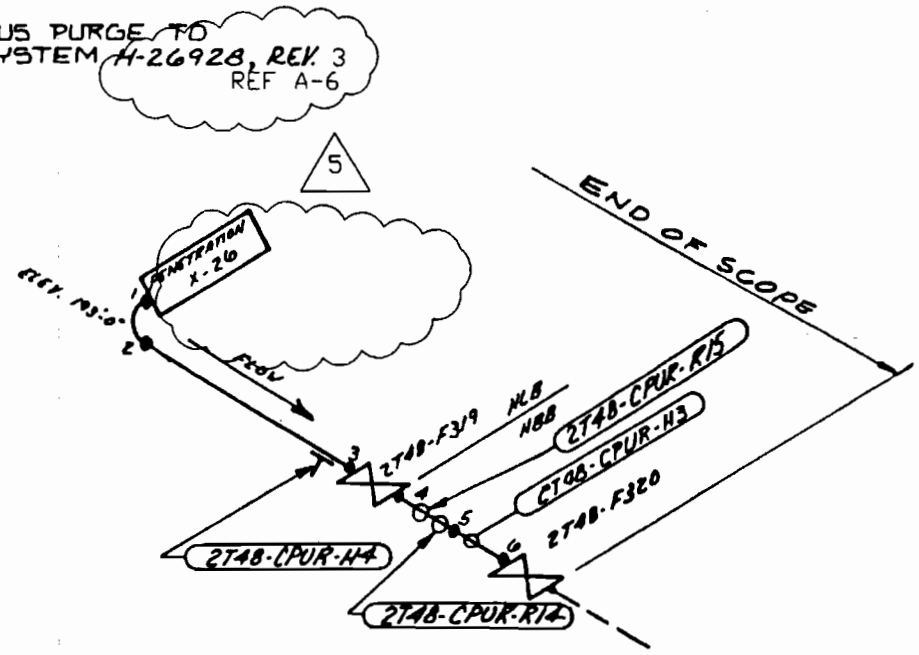

2T48-2CPM-18-POD
PRIMARY CONTAINMENT PURGE
AND INERTING SYSTEM
HATCH 2, CLASS 2

LOCATION: 193'-0" LEVEL
SOUTH WALL

REV.	DATE	BY	CHK'D	APPR.1
4	6-28-99	RPW	BKJ	DRG
3	11-30-90	WOS	WS	WHC
2	4-13-87	BST	BKJ	
5	9-27-04	SM	MB	

FIGURE 8-80

REFERENCES:

DRYWELL & TORUS PURGE TO STANDBY GAS SYSTEM _ _ H-2692B REV. 3
REF G3

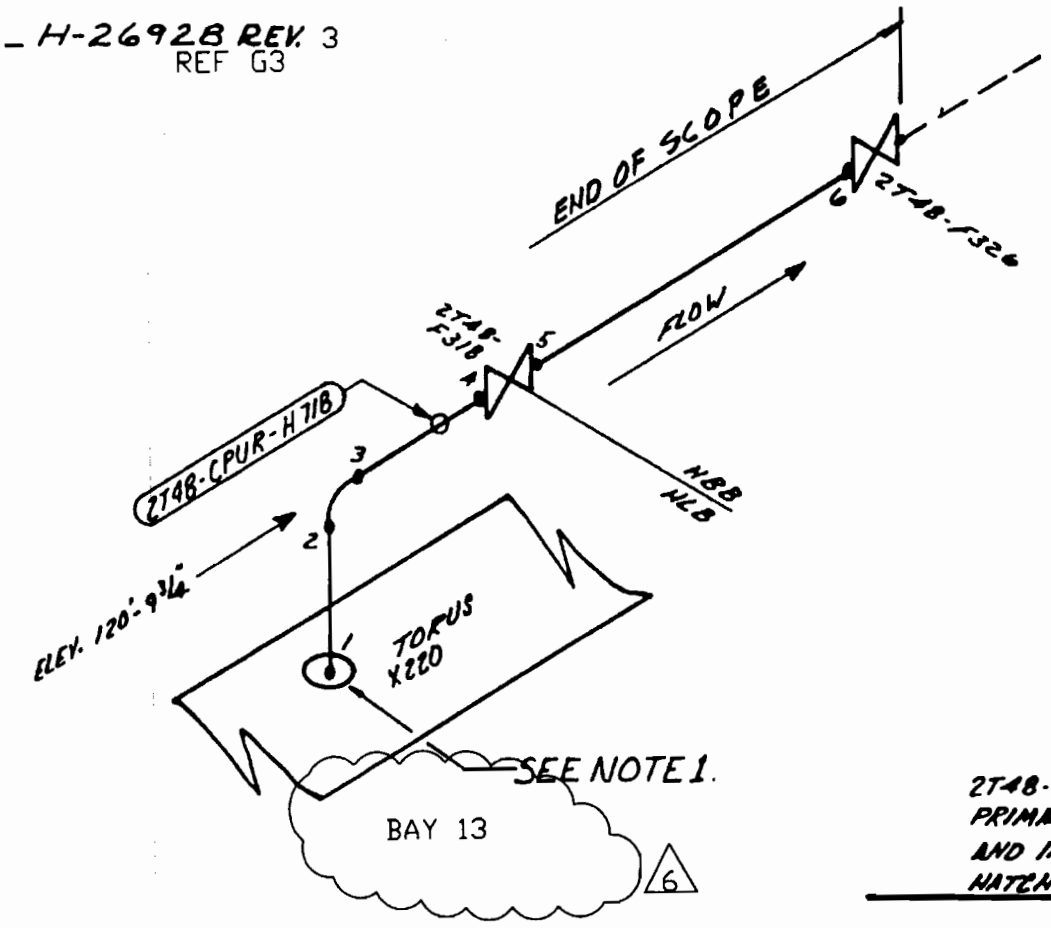

2T48-2CPI-18-POT
PRIMARY CONTAINMENT PURGE AND INERTING SYSTEM
HATCH 2, CLASS 2

LOCATION: NORTH WALL IN TORUS ELEV. 120'-0"

REV	DATE	BY	CHK'D	APPR 1
5	6-28-99	RPW	BKJ	DRG
4	11-30-90	WGS	WS	WHC
3	7/27/90	WGS	WC	RLS
6	9-27-04	SM	MB	DOS

FIGURE B-81

NOTES:

1. FOR DETAILED INFO. SEE FIG. B-93.

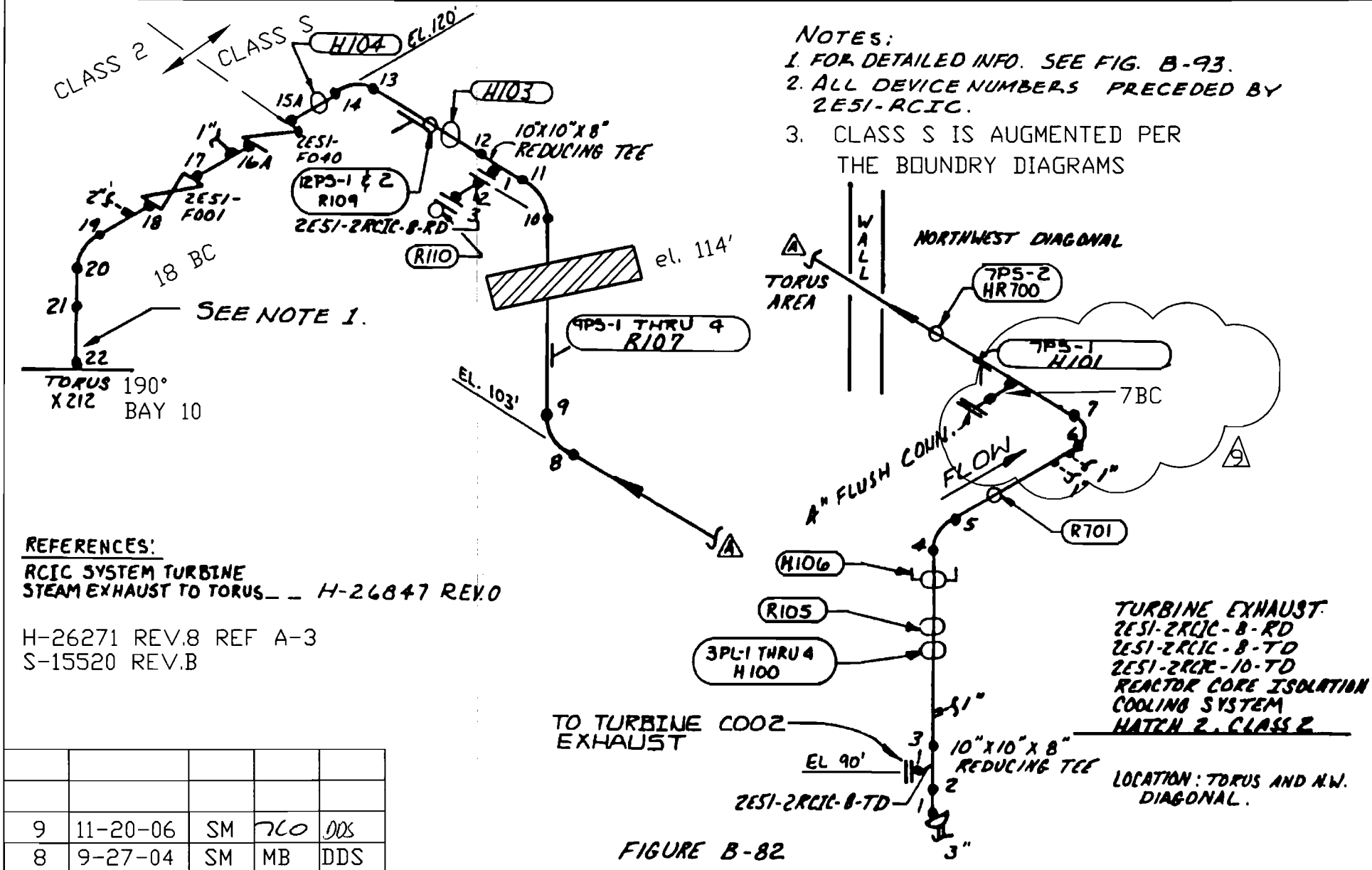

FIGURE B-82

9	11-20-06	SM	TCO	DDS
8	9-27-04	SM	MB	DDS
Rev.	Date	By	CHK'D	APP.1

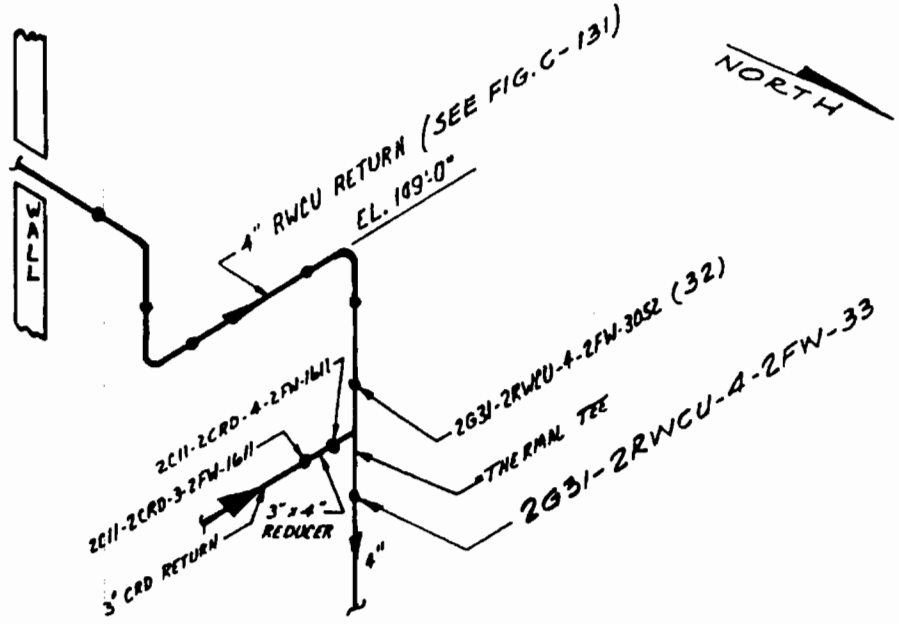

2C11-2CRD-3-2FW

CONTROL ROD DRIVE AND REACTOR WATER CLEANUP CONNECTION
MATCH 2, CLASS 2

LOCATION : MAIN STEAM CHASE

REFERENCE ISO: H-26855, REV. 3

REF E-8

5

REV.	DATE	BY	CHK'D	APPR. 1
4	11-30-90	WGS	WS	WKC
3	7/27/90	WS	WC	RLD
5	9-27-04	SM	MB	DDS

FIGURE B-83

THERMAL TEE AUGMENTED EXAMS

5

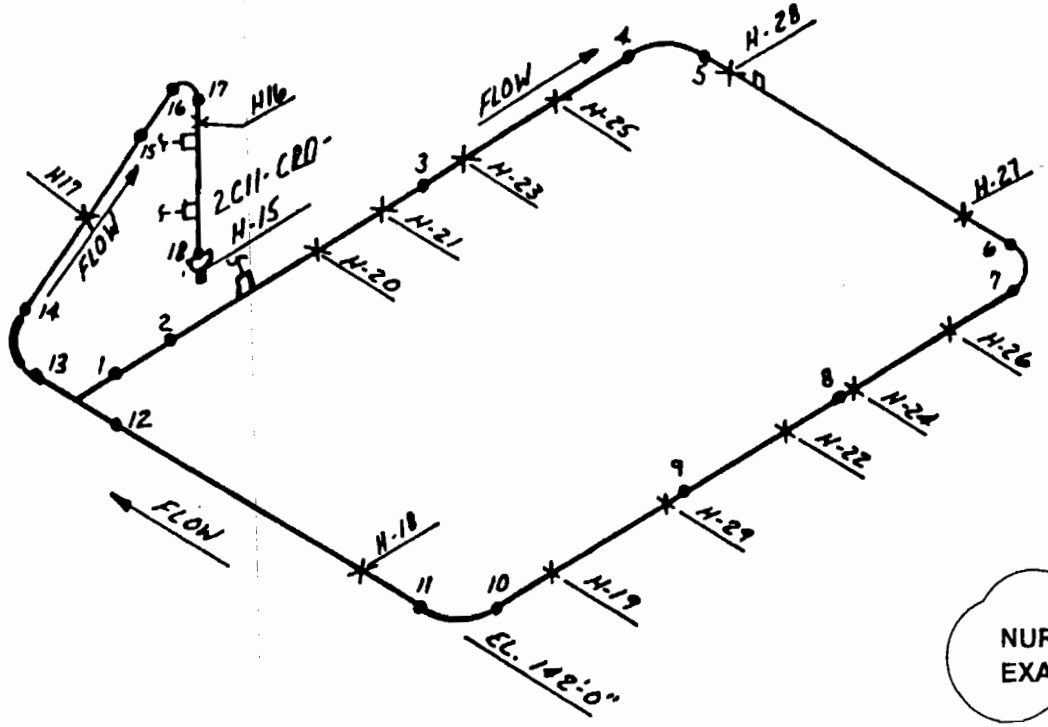

REFERENCES:

CONTROL ROD DRIVE VENTS & DRAINS EL. 130'-0" (SOUTH SIDE) — — — — — — — H-26803 REV. 1

REF G-6

5

5

NUREG-0803 AUGMENTED EXAMINATIONS

SCRAM DISCHARGE VOLUME CONTROL
ROD DRIVE SYSTEM
2C11-2CRD-8S-SDV
HATCH 2, CLASS 2

LOCATION : SOUTHSIDE OF DRYWELL
NOTE :
ALL DEVICE NUMBERS PRECEDED BY 2C11-SK1

REV.	DATE	BY.	CHK'D	APPR. 1
5	9-27-04	SM	MB	ODS
4	11-30-90	WGS	WS	WKC
3	3/2/87	BST	WS	MB

FIGURE B-84

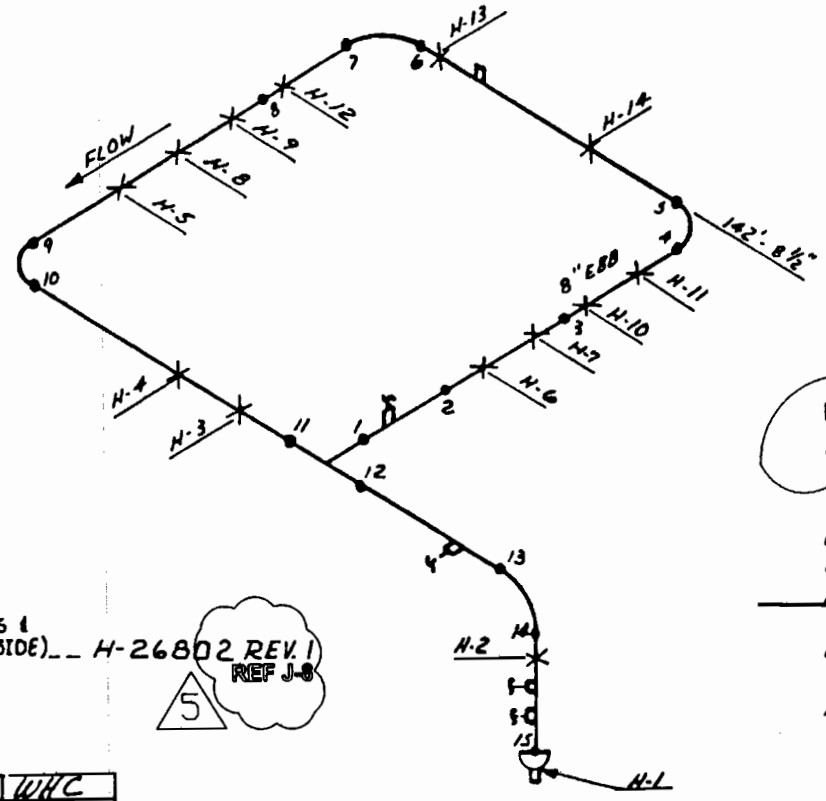

NUREG-0803
AUGMENTED EXAMS

5

SCRAM DISCHARGE VOLUME
CONTROL ROD DRIVE SYSTEM
2C11-2CRD-8N-SDV
HATCH 2, CLASS 2

LOCATION: NORTHSIDE OF DRYWELL

NOTE:
ALL DEVICE NUMBERS PRECEDED BY 2C11-SK2.

REFERENCES:
CONTROL ROD DRIVE - VENTS & DRAINS EL. 130'-0" (NORTH SIDE) H-26802 REV. 1
REF J-8

5

REV	DATE	BY	CHK'D	APPR. 1
4	11-30-90	WGS	WS	WHC
3	[illegible]	BST	[illegible]	[illegible]
5	9-27-04	SM	MB	DDS

FIGURE B-85

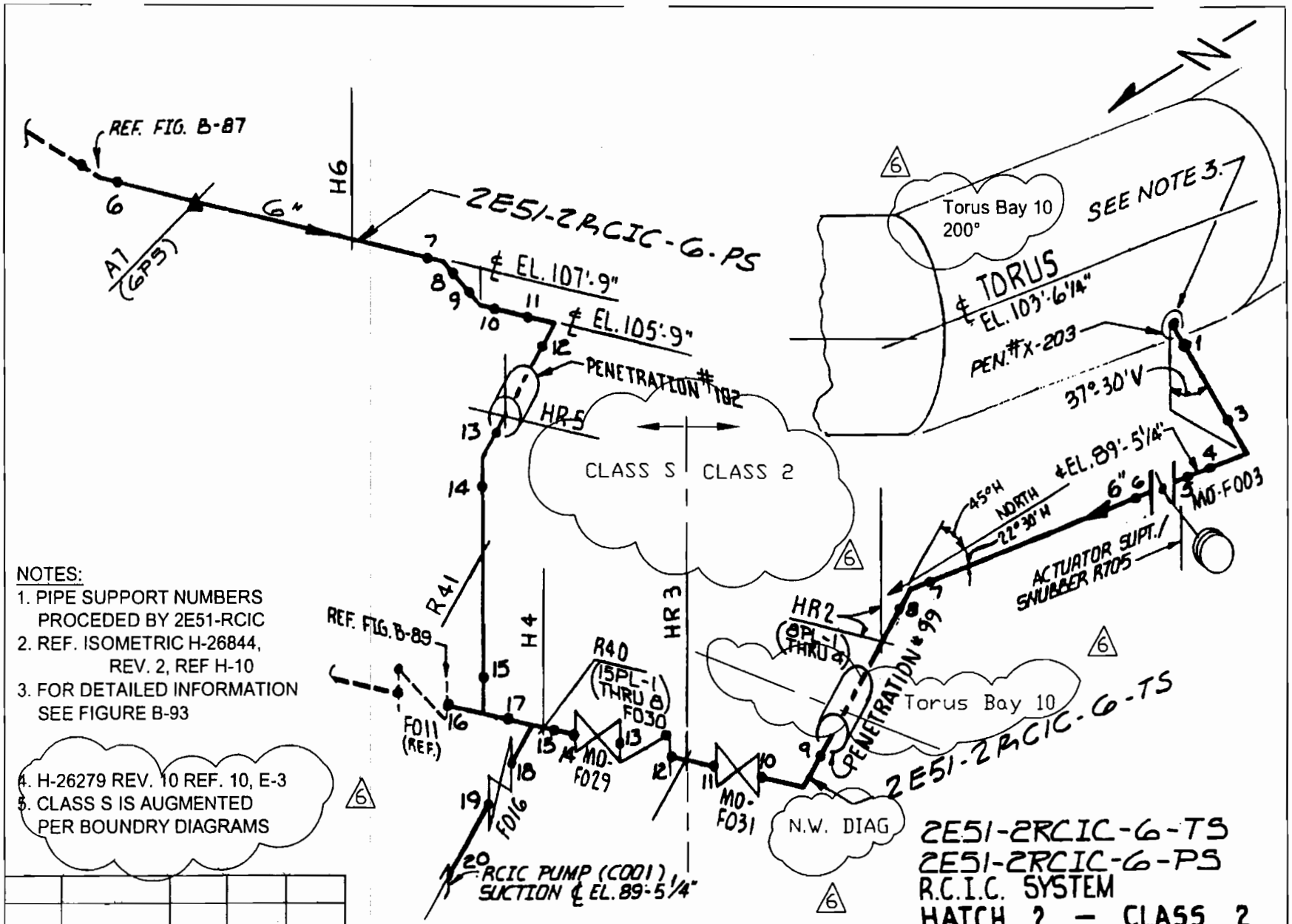

NOTES:
1. PIPE SUPPORT NUMBERS PROCEDED BY 2E51-RCIC
2. REF. ISOMETRIC H-26844, REV. 2, REF H-10
3. FOR DETAILED INFORMATION SEE FIGURE B-93
4. H-26279 REV. 10 REF. 10, E-3
5. CLASS S IS AUGMENTED PER BOUNDRY DIAGRAMS

Rev.	Date	By	CHK'D	APP.1
6	9-28-04	SM	MB	DOS

FIGURE B-86

2E51-2RCIC-6-TS
2E51-2RCIC-6-PS
R.C.I.C. SYSTEM
HATCH 2 — CLASS 2
LOCATION: TORUS ROOM
N.W. DIAG

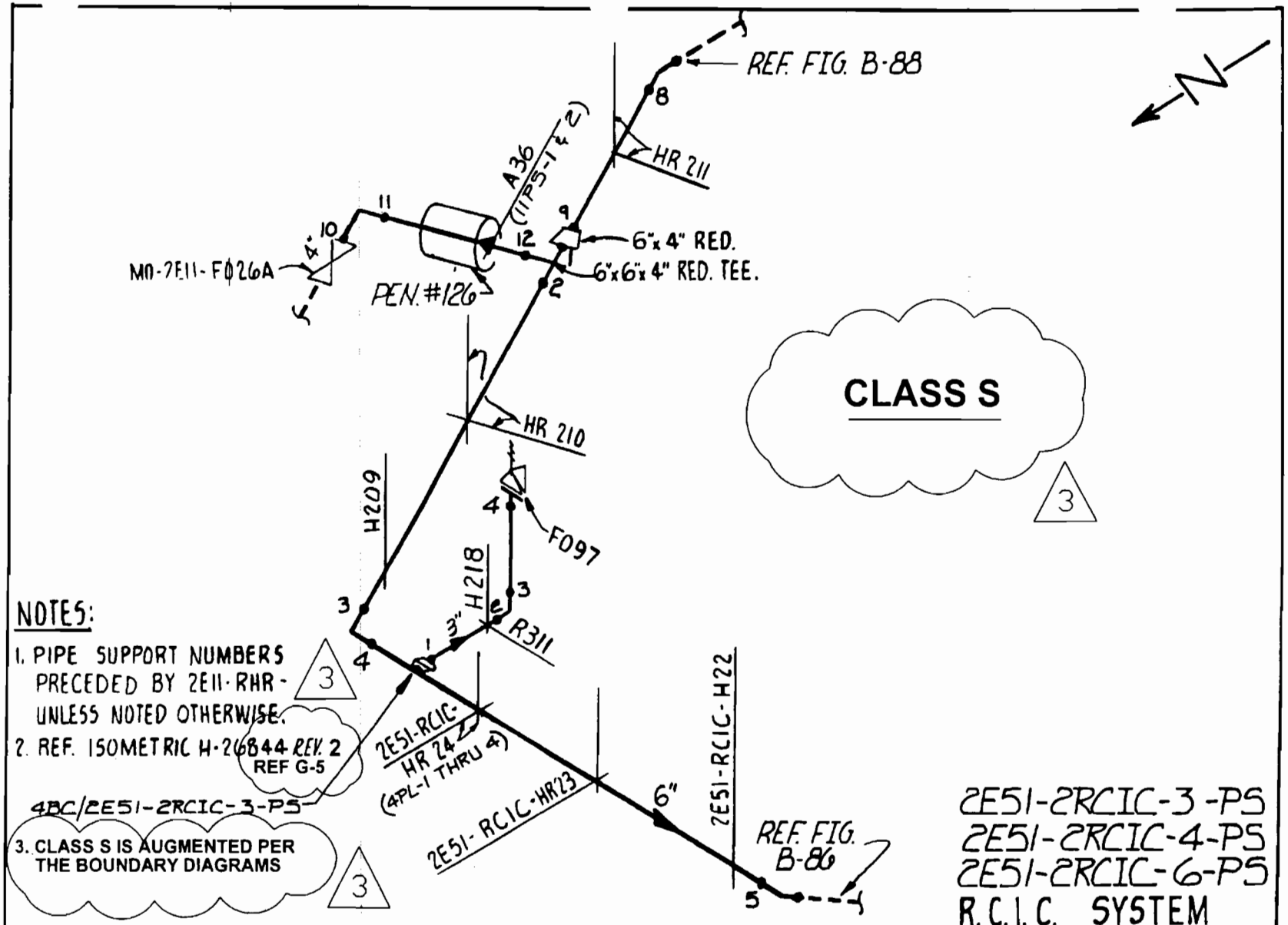

NOTES:

1. PIPE SUPPORT NUMBERS PRECEDED BY 2E11-RHR- UNLESS NOTED OTHERWISE.
2. REF. ISOMETRIC H-26844 REV. 2
3. CLASS S IS AUGMENTED PER THE BOUNDARY DIAGRAMS

REV.	DATE	BY	CHK'D	APPR. 1
2	11-30-90	WGS	WS	WHC
1	4-13-87	BST	BKG	CWD
3	9-28-04	SM	MB	DDS

FIGURE B-87

2E51-2RCIC-3-PS
2E51-2RCIC-4-PS
2E51-2RCIC-6-PS
R.C.I.C. SYSTEM
HATCH 2 – CLASS 2
LOCATION: TORUS ROOM

NOTES:
1. PIPE SUPPORT NUMBERS PRECEDED BY 2E11-RHR-
2. REF. ISOMETRIC H-26844, REV.2, REF. C-3
3. CLASS "S" IS AUGUMENTED, (SEE BOUNDARY DIAGRAMS)

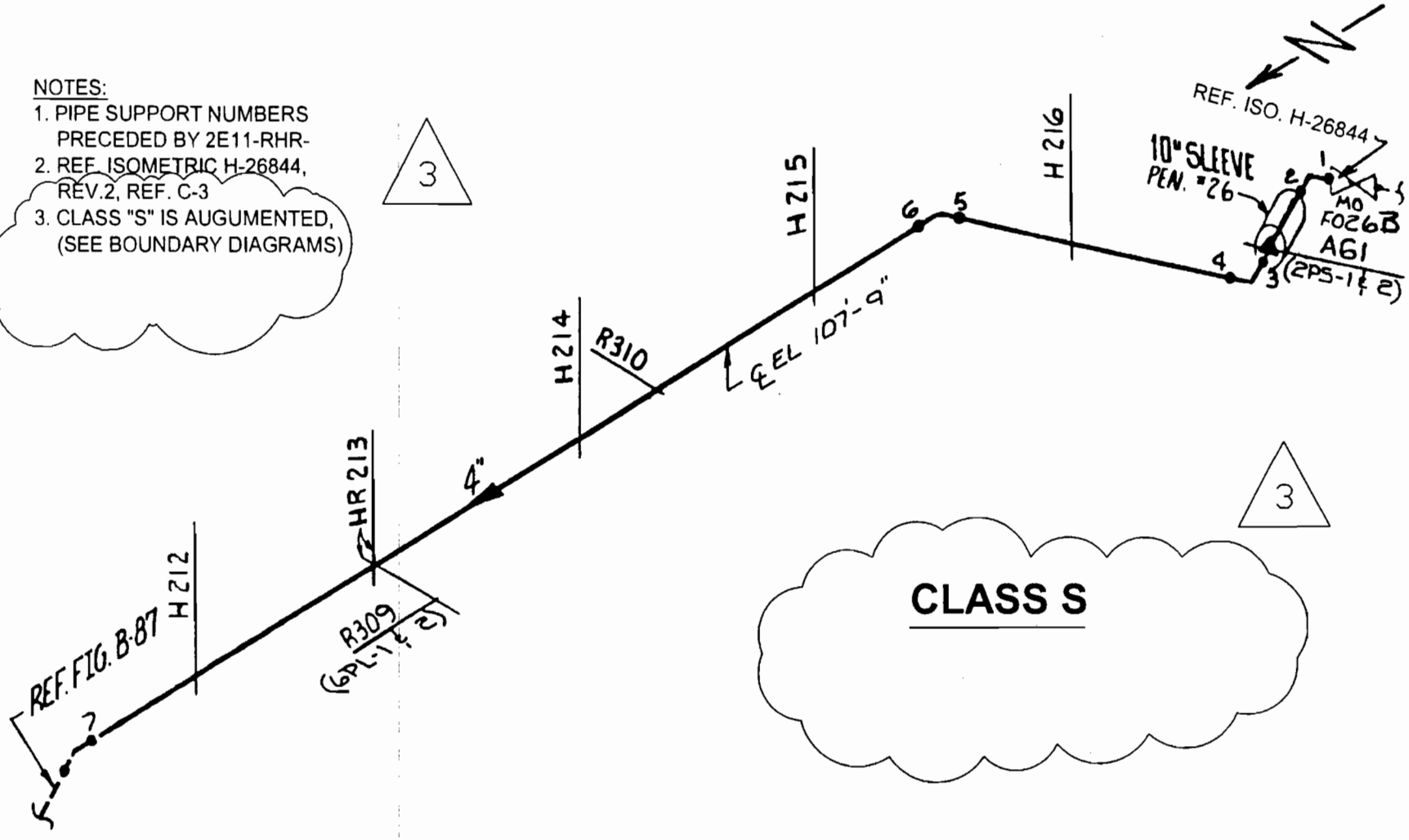

FIGURE B-88

3	9-28-04	SM	MB	DDS
Rev.	Date	By	CHK'D	APP.1

2E51-2RCIC-4-PS
R.C.I.C. SYSTEM
HATCH 2 CLASS 2
LOCATION: TORUS ROOM

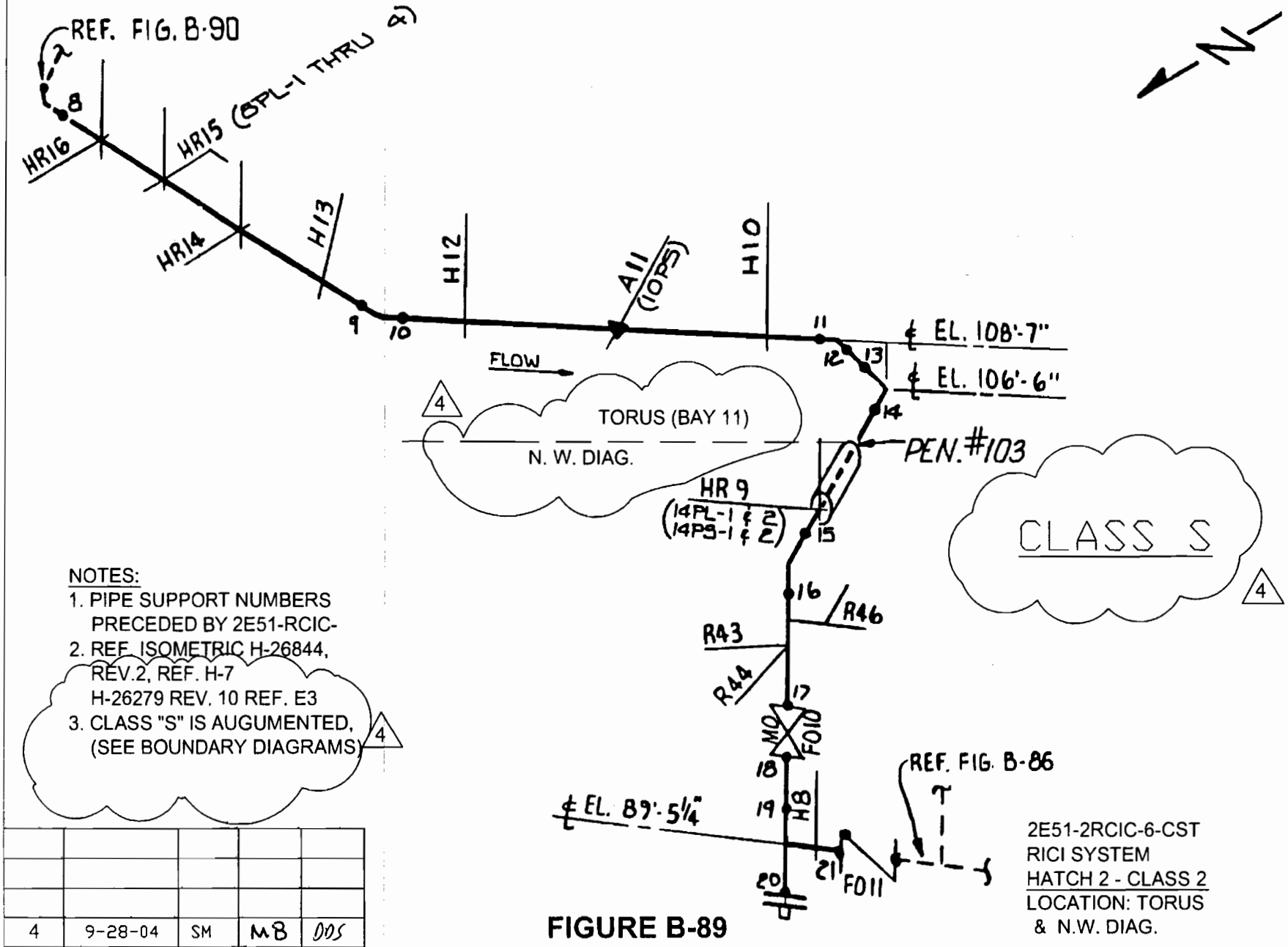

NOTES:
1. PIPE SUPPORT NUMBERS PRECEDED BY 2E51-RCIC-
2. REF. ISOMETRIC H-26844, REV.2, REF. H-7
   H-26279 REV. 10 REF. E3
3. CLASS "S" IS AUGUMENTED, (SEE BOUNDARY DIAGRAMS) 4

4	9-28-04	SM	MB	DDS
Rev.	Date	By	CHK'D	APP.1

FIGURE B-89

2E51-2RCIC-6-CST
RICI SYSTEM
HATCH 2 - CLASS 2
LOCATION: TORUS
& N.W. DIAG.

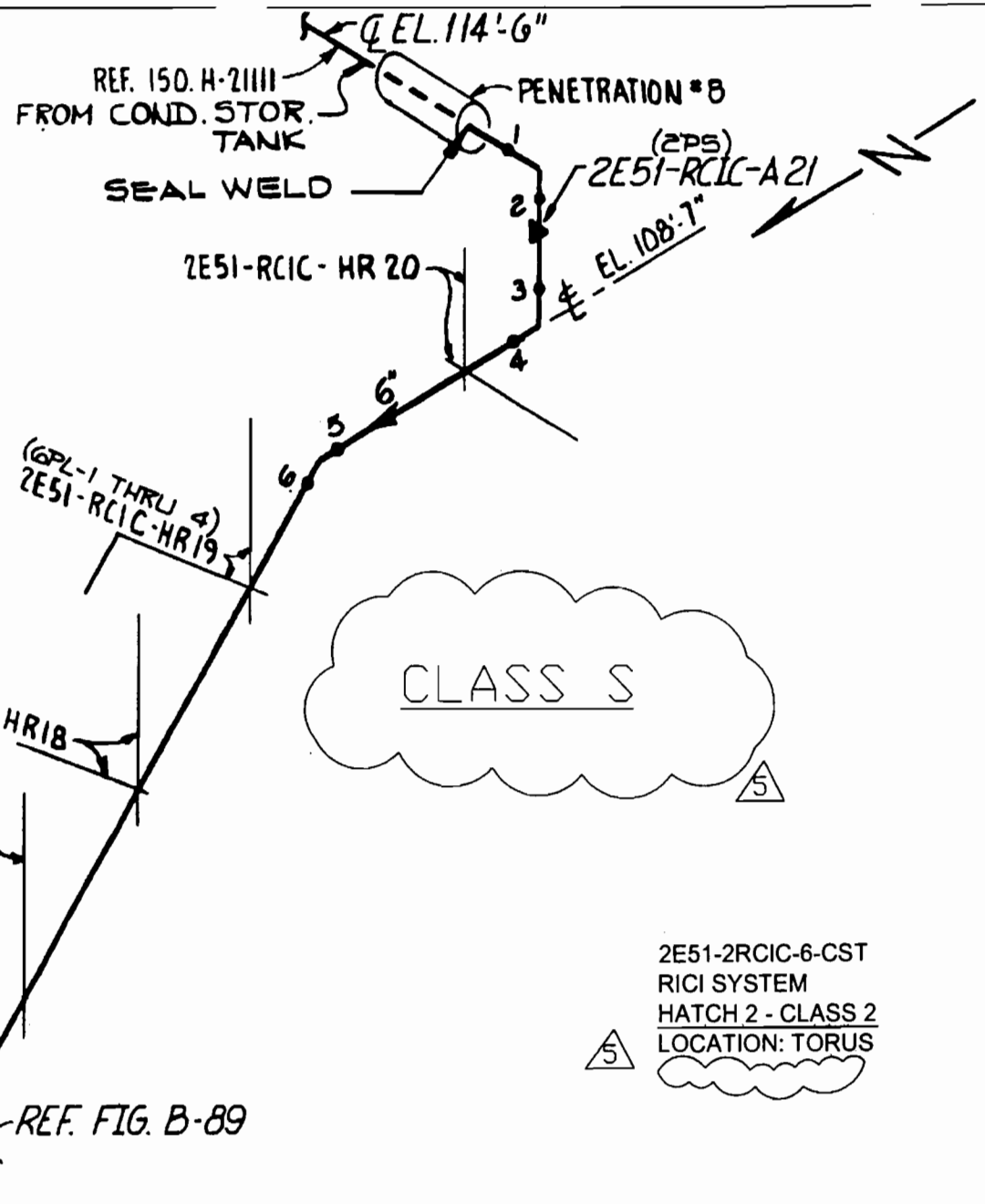

CLASS S

5

NOTES:
1. REF. ISOMETRIC H-26844, REV.2, REF. A-3
H-26279 REV. 10 REF. E-3
2. CLASS "S" IS AUGUMENTED, (SEE BOUNDARY DIAGRAMS)

5

2E51-2RCIC-6-CST
RICI SYSTEM
HATCH 2 - CLASS 2
LOCATION: TORUS

5

5	9-28-04	SM	MB	ODS
Rev.	Date	By	CHK'D	APP.1

FIGURE B-90

CLASS S

NOTES:
1. PIPE SUPPORT NUMBERS PROCEDED BY 2E51-RCIC-
2. REF. ISOMETRIC H-26845, REV 2, REF. J-3
H-26280 REV. 5 REF. SECTION "D-D"
3. CLASS "S" IS AUGUMENTED, (SEE BOUNDARY DIAGRAMS)

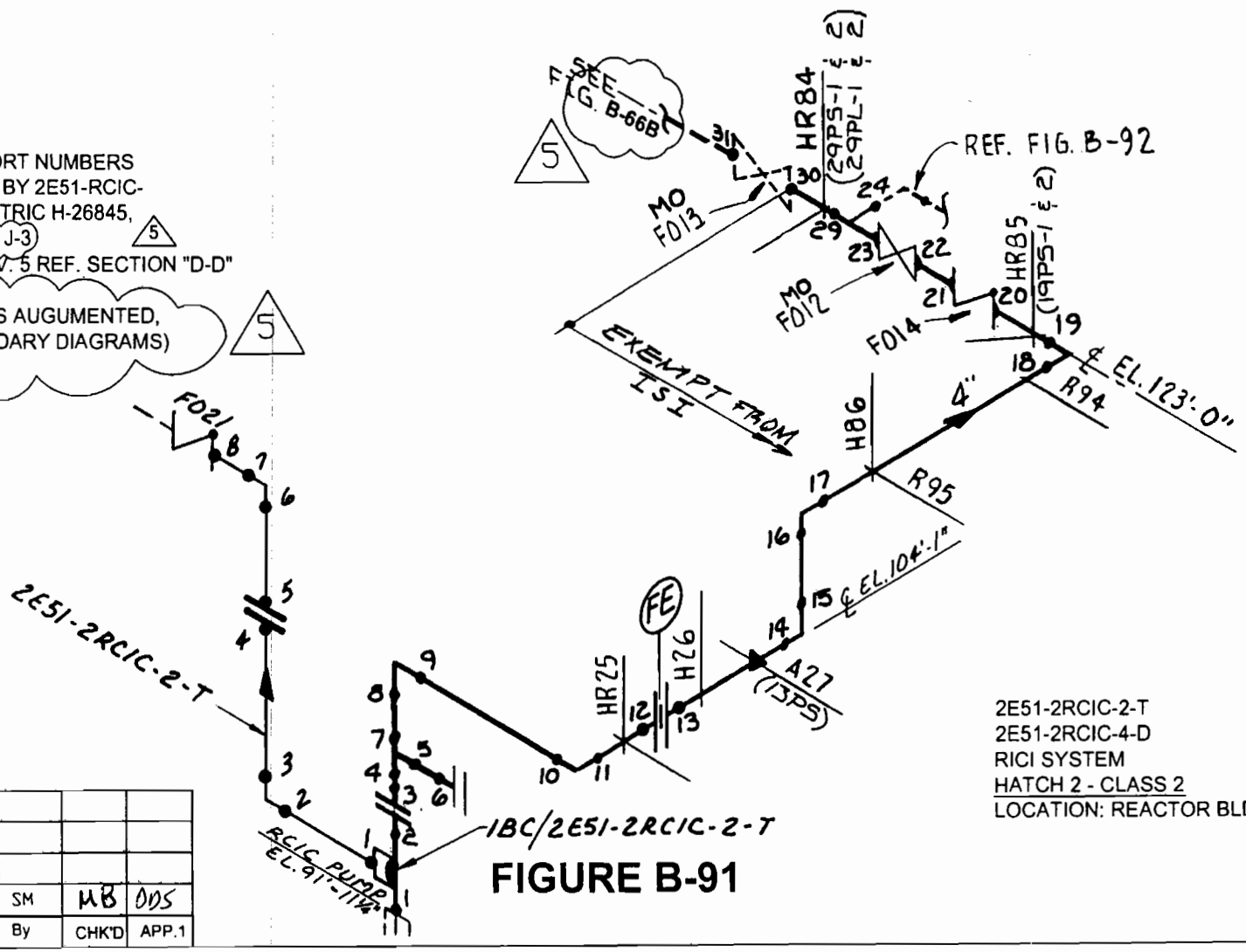

2E51-2RCIC-2-T
2E51-2RCIC-4-D
RICI SYSTEM
HATCH 2 - CLASS 2
LOCATION: REACTOR BLDS.

Rev.	Date	By	CHK'D	APP.1
5	9-28-04	SM	MB	DDS

FIGURE B-91

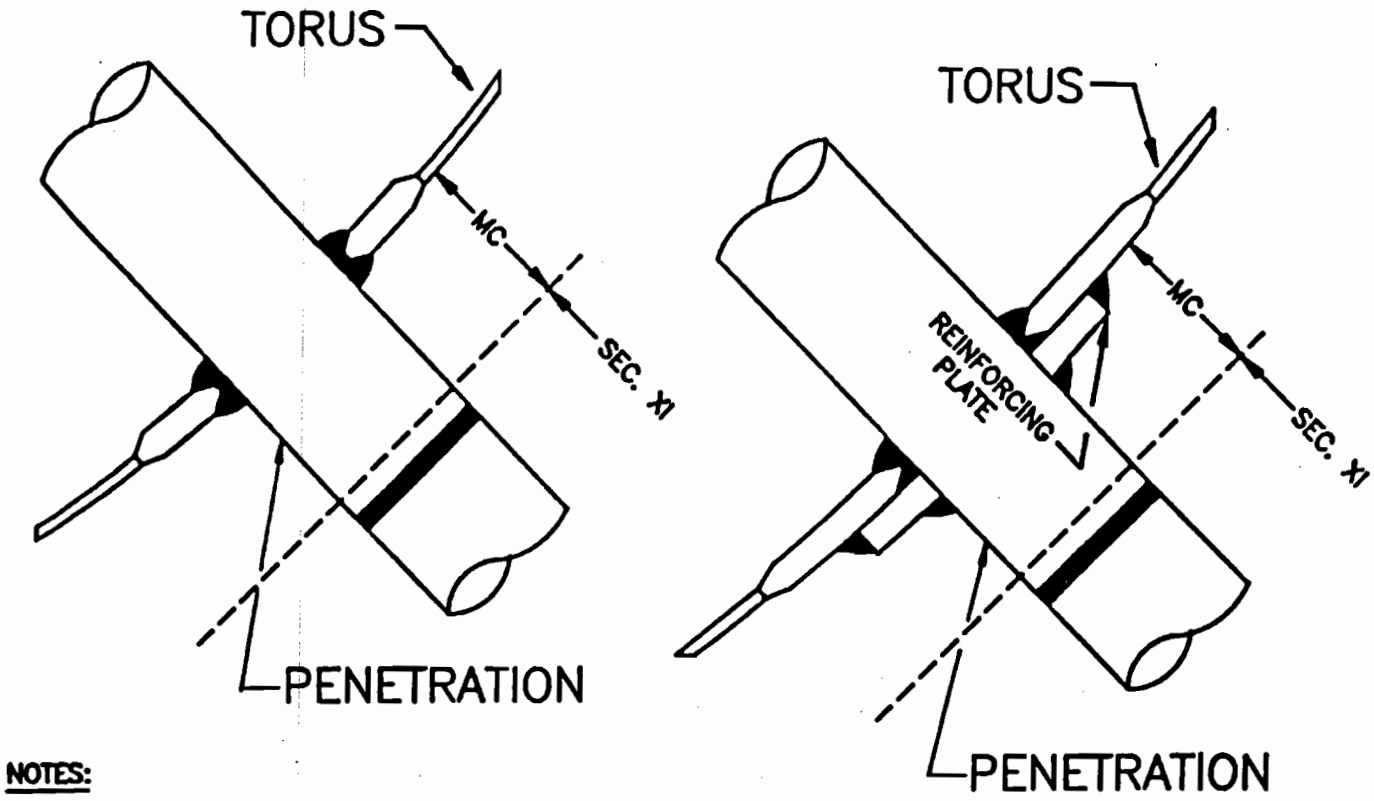

NOTES:

1. PIPING ON MC SIDE FURNISHED BY CB&I AND IS NOT UNDER JURISDICTION OF ASME SECTION XI
2. 10 CFR 50.55a DOES NOT REQUIRE IWE EXAMINATION ON CLASS MC COMPONENTS (REFERENCE RELIEF REQUEST 6.1.4) 1

FIGURE B-93

HATCH UNIT 2

1	8-26-93	WS	KEW	WHC
0	7/27/90	WS	[illegible]	[illegible]

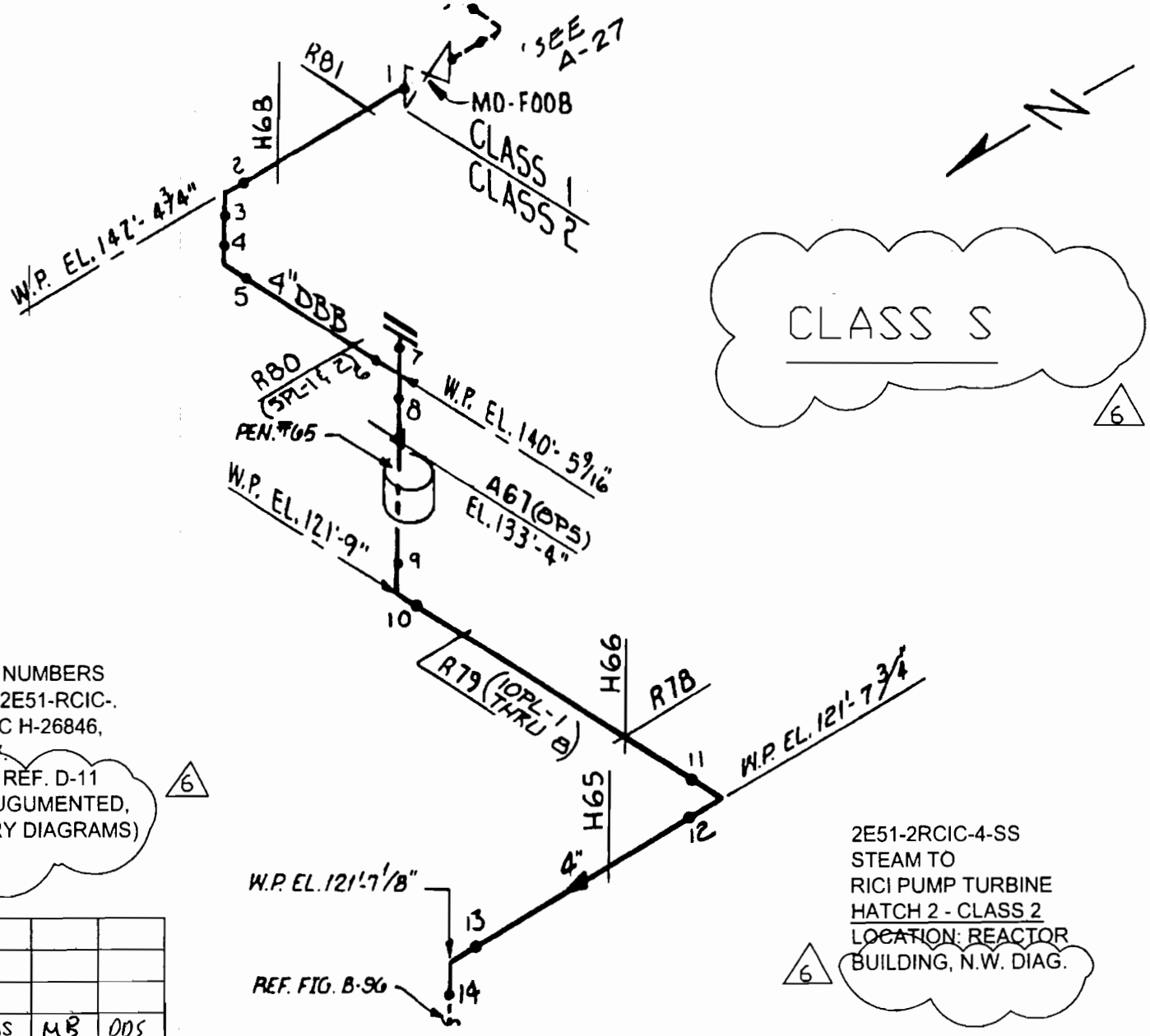

NOTES:
1. PIPE SUPPORT NUMBERS PRECEDED BY 2E51-RCIC-.
2. REF. ISOMETRIC H-26846, REV.7, REF. ~~C-7~~. H-26271 REV. 8 REF. D-11
3. CLASS "S" IS AUGUMENTED, (SEE BOUNDARY DIAGRAMS)

6

Rev.	Date	By	CHK'D	APP.1
6	10-26-04	TAS	MB	DDS

FIGURE B-95

NOTES:

1. PIPE SUPPORT NUMBERS PRECEDED BY 2E51-RCIC
2. REF. ISOMETRIC H-26B46 REV. 7 REF F-7
3. LINE SLOPED APPROX. 1/16" PER FOOT IN HORIZONTAL RUNS. H-26271 REV.8 REF E-3
4. CLASS "S" IS AUGUMENTED, (SEE BOUNDARY DIAGRAMS)

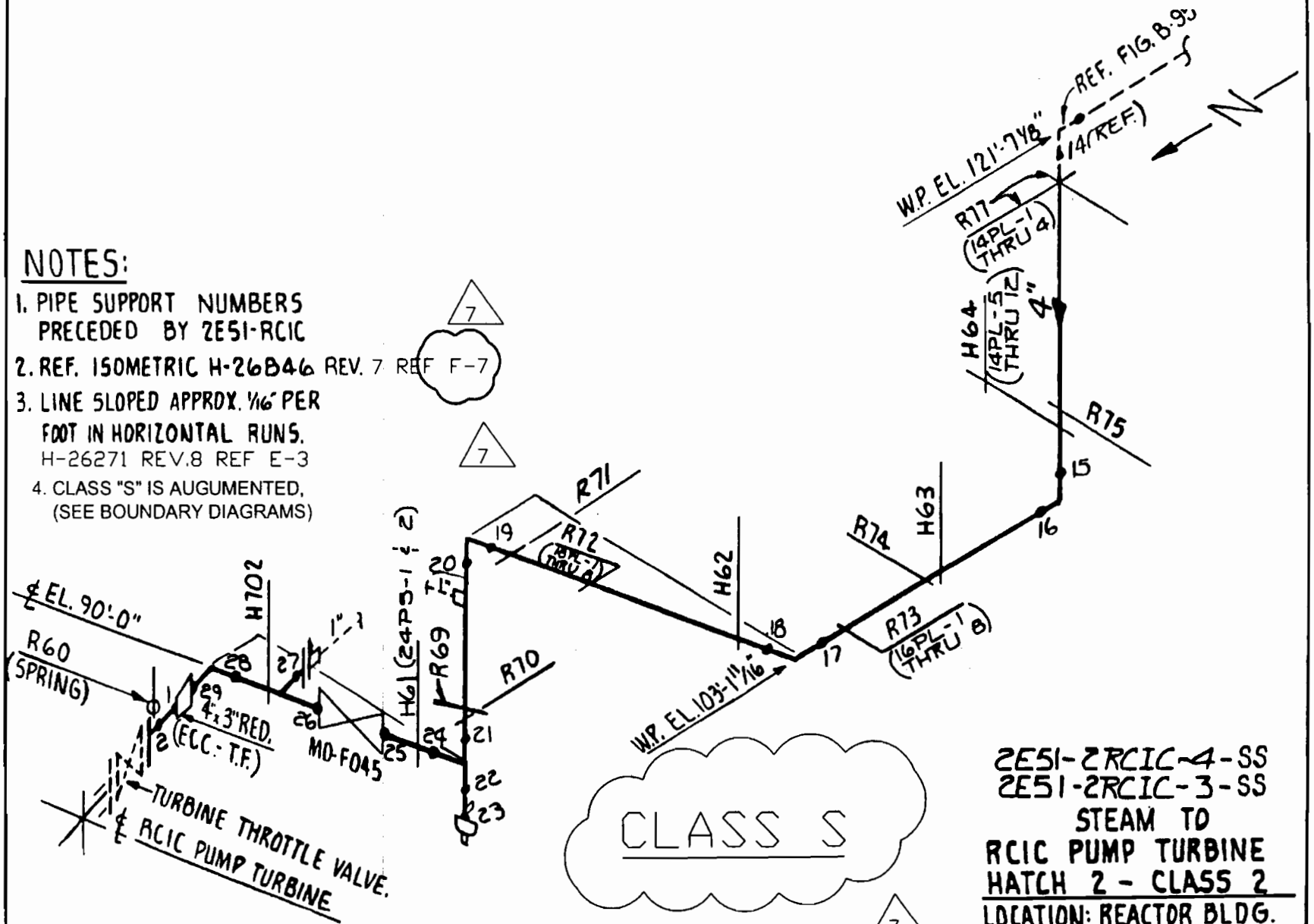

2E51-2RCIC-4-SS
2E51-2RCIC-3-SS
STEAM TO
RCIC PUMP TURBINE
HATCH 2 - CLASS 2
LOCATION: REACTOR BLDG.
N.W. Diag

REV.	DATE	BY	CHK'D	APPR. 1
5	6-28-99	RPW	BKJ	DRG
7	9-28-04	SM	MB	DDS
6	1-05-01	RPW	BKJ	DRG

FIGURE B-96

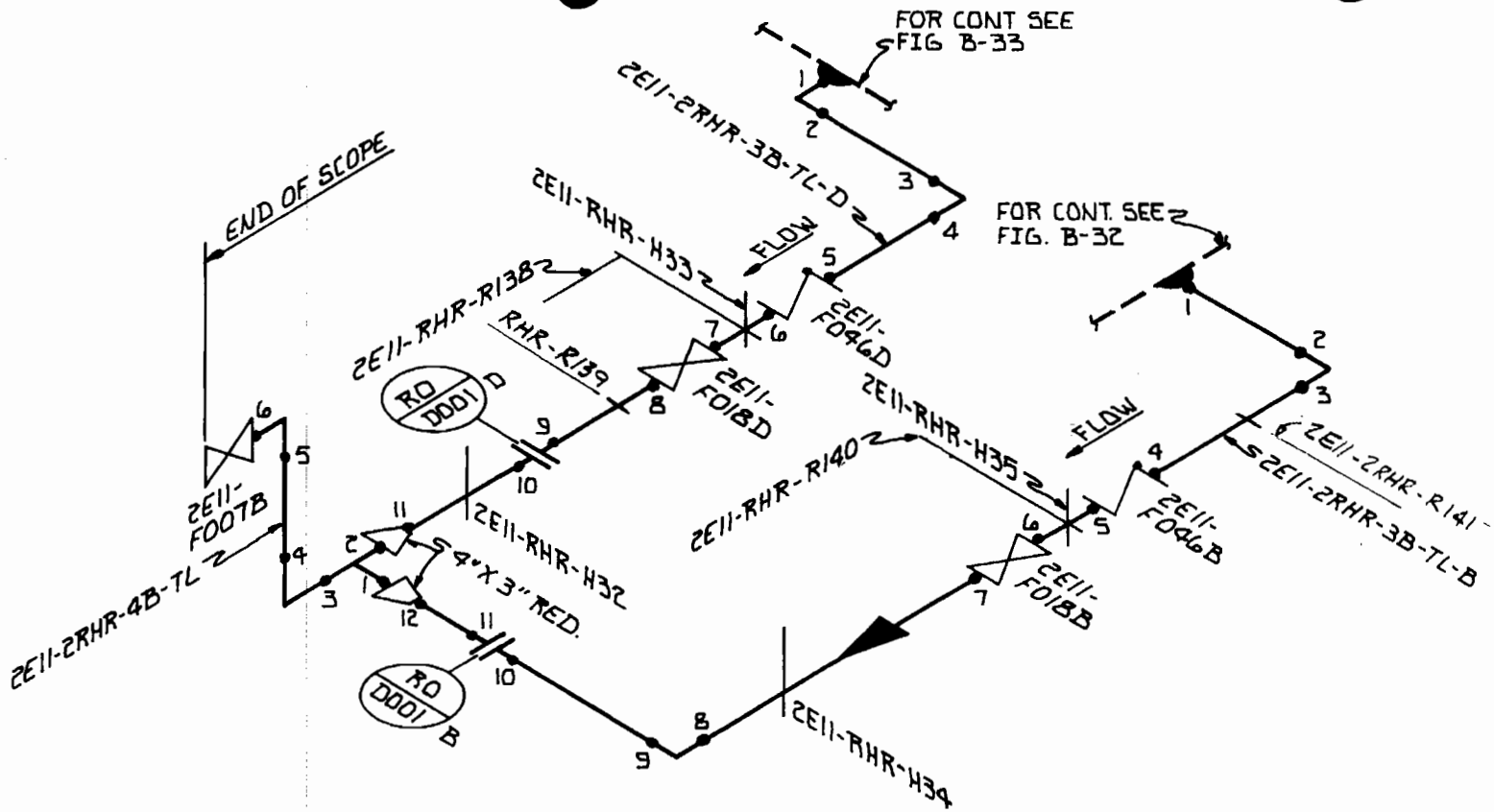

REFERENCES:
RHR SYSTEM MINIMUM
FLOW BYPASS — — — — H-26829 REV. 3, B-4, C-3

4

RHR TO CORE SPRAY TEST LINE-B SIDE
2E11-2RHR-3B-TL-B
2E11-2RHR-3B-TL-D
2E11-2RHR-4B-TL
HATCH 2 CLASS 2
LOCATION: SE DIAGONAL

EXEMPT

REV.	DATE	BY	CHK'D	APPR. 1
2	11-30-90	WGS	WS	WHC
4	8-11-06	SM	JCD	DDS
3	9-28-04	SM	MB	DDS

FIGURE B-101

Hatch Unit 2 Fourth Ten Year Inservice Inspection Plan
Class 3 Figures

Figure No.	Rev. No.	Description
C-1	-	Not used
C-2	3	RHR - Side A Service Water Supply to Hx & Pump Discharge - NE Diagonal
C-3	4	RHR - Side A Service Water Supply to Hx & Pump Discharge - Above Torus
C-4	4	RHR - Side B Service Water Supply to Hx & Pump Discharge - Above Torus
C-5	3	RHR - Side B Service Water Supply to Hx & Pump Discharge - SE Diagonal
C-6	-	Not used
C-7	5	RHR Service Water Return - Reactor Bldg. - NE Diagonal - Above Torus
C-8	4	RHR Service Water Return - Reactor Building
C-9	4	RHR Service Water - River Intake Structure
C-10	4	RHR Service Water - River Intake Structure
C-11	4	RHR Service Water - River Intake Structure
C-12	-	Not used
C-13	-	Not used
C-14	-	Not used
~~C-14A~~	~~-~~	~~Not used~~
C-15	5	Plant Service Water East Side - Reactor Building
C-16	-	Not used
C-16A	-	Not used
C-17	6	Plant Service Water East Side - Reactor Building
C-17A	2	Plant Service Water East Side - Reactor Building
C-17B	1	Plant Service Water – Reactor Building

Figure No.	Rev. No.	Description
C-18	-	Not used
C-19	-	Not used
C-20	-	Not used
C-21	-	Not used
C-22	-	Not used
C-23	5	Plant Service Water Piping Near Chiller Condensers - Reactor Building
C-23A	1	Plant Service Water Return West Side - Reactor Building
C-23B	1	Plant Service Water Return West Side - Reactor Building
C-24	-	Not used
C-25	-	Not used
C-26	-	Not used
C-26A	-	Not used
C-27	-	Not used
C-28	4	Plant Service Water - River Intake Structure
C-29	5	Plant Service Water - River Intake Structure
C-30	-	Not used
C-31	-	Not used
C-32	4	Plant Service Water - Reactor Building West
C-33	-	Not used
C-34	-	Not used
C-35	-	Not used

Figure No.	Rev. No.	Description
C-57	-	Not used
C-58	-	Not used
C-59	-	Not used
C-60	-	Not used
C-61	-	Not used
C-62	-	Not used
C-63	-	Not used
C-64	-	Not used
C-65	-	Not used
C-66	-	Not used
C-67	-	Not used
C-68	-	Not used
C-69	-	Not used
C-70	-	Not used
C-71	-	Not used
C-72	-	Not used
C-73	-	Not used
C-74	-	Not used
C-75	-	Not used
C-76	-	Not used
C-77	-	Not used

Figure No.	Rev. No.	Description
C-78	-	Not used
C-79	-	Not used
C-80	-	Not used
C-81	-	Not used
C-82	-	Not used
C-83	-	Not used
C-84	-	Not used
C-85	-	Not used
C-86	-	Not used
C-87	-	Not used
C-88	-	Not used
C-89	-	Not used
C-90	-	Not used
C-91	-	Not used
C-92	-	Not used
C-93	-	Not used
C-94	-	Not used
C-95	-	Not used
C-96	-	Not used
C-97	-	Not used
C-98	-	Not used

Figure No.	Rev. No.	Description
C-99	-	Not used
C-100	-	Not used
C-101	-	Not used
C-102	-	Not used
C-103	-	Not used
C-104	-	Not used
C-105	-	Not used
C-106	-	Not used
C-107	-	Not used
C-108	-	Not used
C-109	5	Main Steam - Primary Steam Relief Valve F013K Piping - Discharge Side
C-110	4	Main Steam - Primary Steam Relief Valve F013K Piping - Discharge Side
C-111	5	Main Steam - Primary Steam Relief Valve F013F Piping - Discharge Side
C-112	3	Main Steam - Primary Steam Relief Valve F013F Piping - Discharge Side
C-113	4	Main Steam - Primary Steam Relief Valve F013B Piping - Discharge Side
C-114	3	Main Steam - Primary Steam Relief Valve F013B Piping - Discharge Side
C-115	4	Main Steam - Primary Steam Relief Valve F013E Piping - Discharge Side
C-116	5	Main Steam - Primary Steam Relief Valve F013E Piping - Discharge Side
C-117	5	Main Steam - Primary Steam Relief Valve F013A Piping - Discharge Side
C-118	5	Main Steam - Primary Steam Relief Valve F013A Piping - Discharge Side
C-119	5	Main Steam - Primary Steam Relief Valve F013G Piping - Discharge Side

Figure No.	Rev. No.	Description
C-120	4	Main Steam - Primary Steam Relief Valve F013C Piping - Discharge Side
C-121	4	Main Steam - Primary Steam Relief Valve F013H Piping - Discharge Side
C-122	4	Main Steam - Primary Steam Relief Valve F013D Piping - Discharge Side
C-123	4	Main Steam - Primary Steam Relief Valve F013L Piping - Discharge Side
C-124	4	Main Steam - Primary Steam Relief Valve F013M Piping - Discharge Side
C-125	3	Reactor Water Cleanup System
C-126	2	Reactor Water Cleanup System

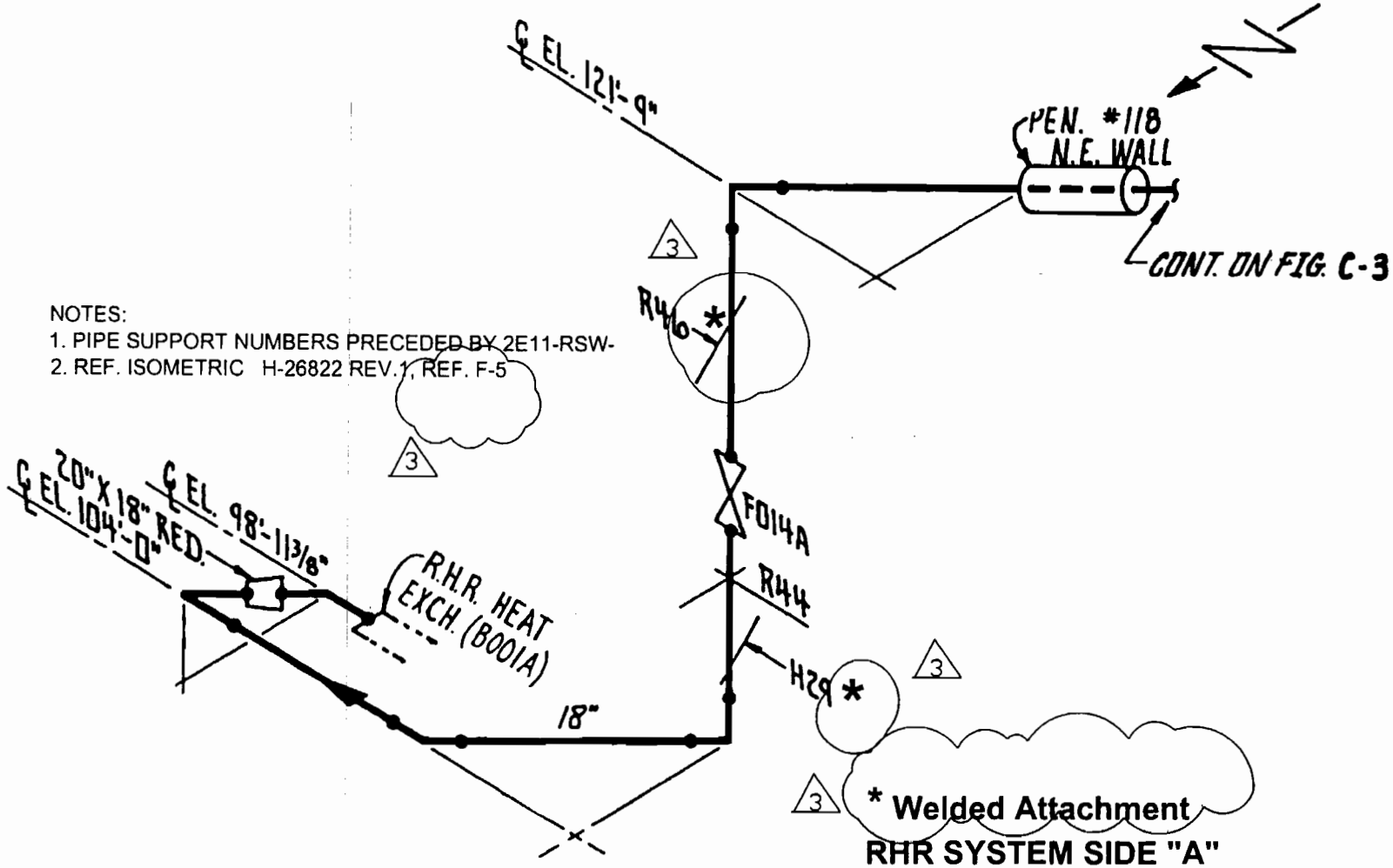

NOTES:
1. PIPE SUPPORT NUMBERS PRECEDED BY 2E11-RSW-
2. REF. ISOMETRIC H-26822 REV.1, REF. F-5

* Welded Attachment

RHR SYSTEM SIDE "A"
SERVICE WATER SUPPLY TO HEAT EXCHANGER AND PUMP DISCH.
HATCH 2. CLASS 3
LOCATION: N.E. DIAGONAL

FIGURE C-2

3	9-17-04	SM	MB	DDJ
Rev		By	CHK'D	APP.1

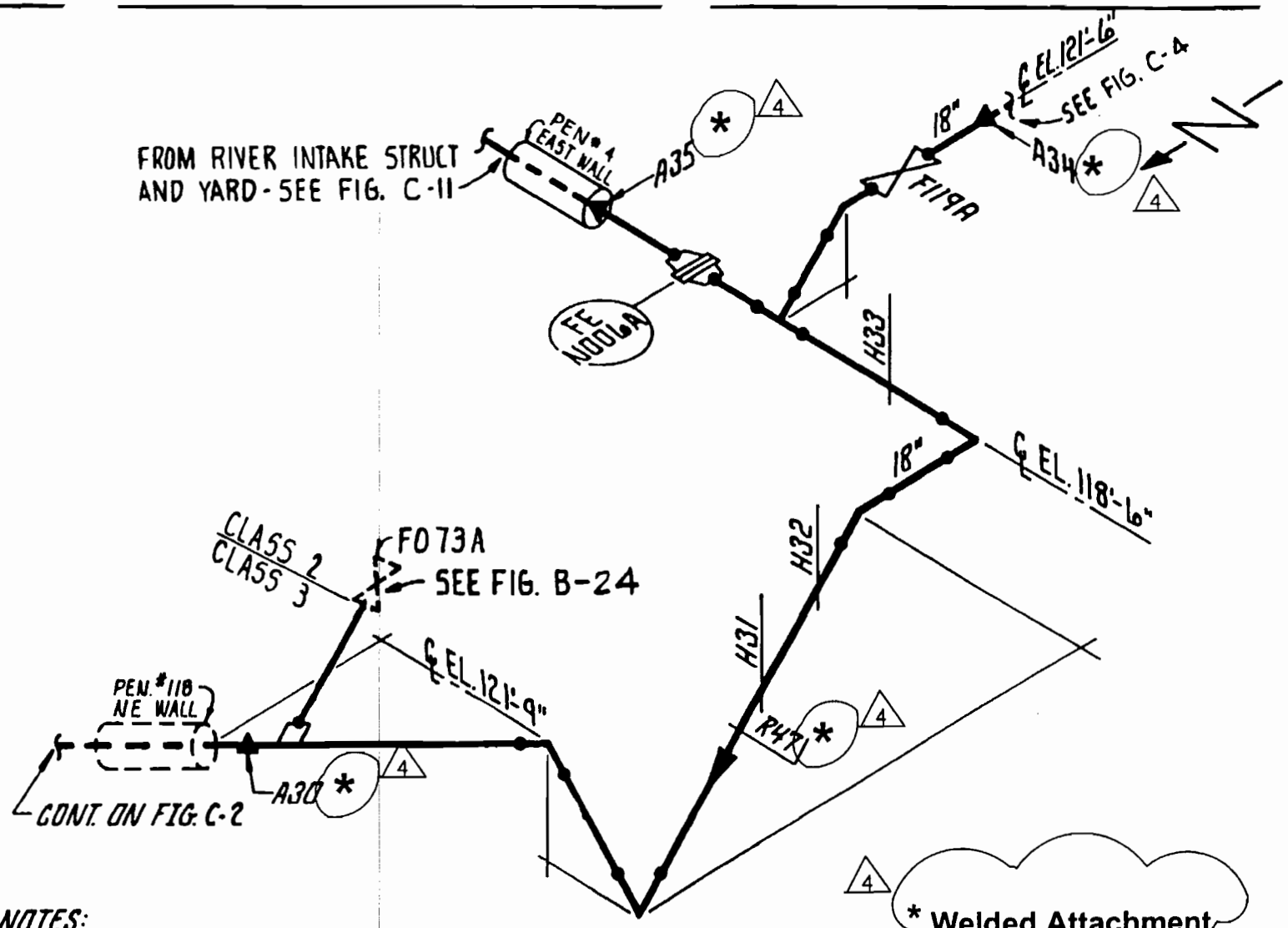

NOTES:

1. PIPE SUPPORT NUMBERS PRECEDED BY 2E11-RSW:-
2. REF. ISOMETRIC H-26822 REV. 1, REF C-7

REV.	DATE	BY	CHK'D	APPR. 1
2	7/27/90	WGS	CWD	RLD
4	9-17-04	SM	MB	DDS
3	11-30-90	WGS	WS	WHC

FIGURE C-3

R.H.R. SYSTEM SIDE "A"
SERVICE WATER SUPPLY TO
HEAT EXCHANGER AND PUMP DISCH.

HATCH 2 CLASS 3

LOCATION: ABOVE TORUS

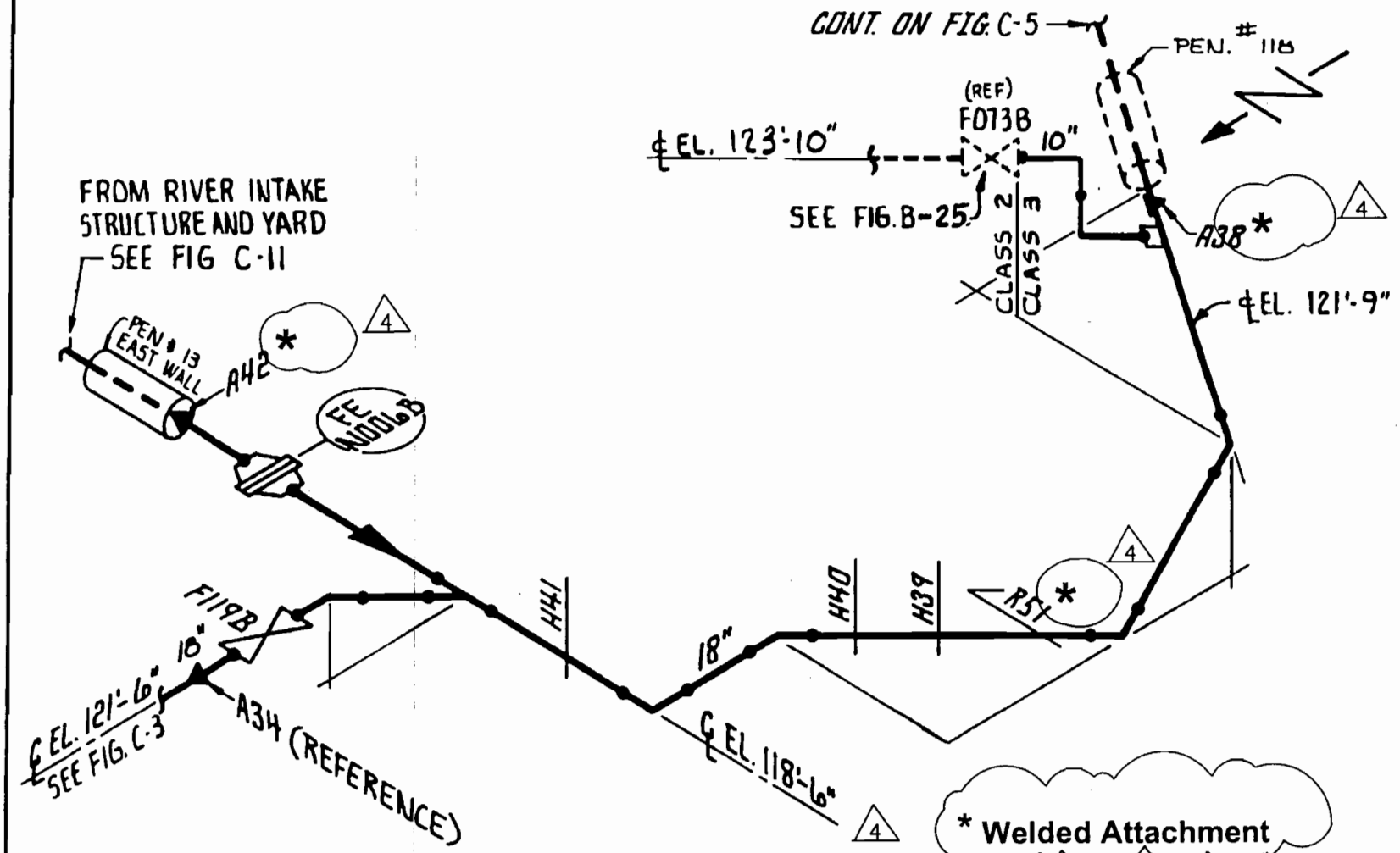

* Welded Attachment

R.H.R. SYSTEM SIDE "B"
SERVICE WATER SUPPLY TO
HEAT EXCHANGER AND PUMP DISCH.

HATCH 2 CLASS 3

LOCATION: ABOVE TORUS
EAST SIDE

NOTES:

1. PIPE SUPPORT NUMBERS PRECEDED BY 2E11-RSW-
2. REF. ISOMETRIC H-26822 REV.1 REF C-7
   H-26110 REV.13 REF B-8

REV.	DATE	BY	CHK'D	APPR. 1
3	1-5-01	RPW	BKJ	DRG
2	11-30-90	WGS	WS	WHC
1	7-87	BST	CJG	[illegible]
4	10-13-04	TAS	MB	DDS

FIGURE C-4

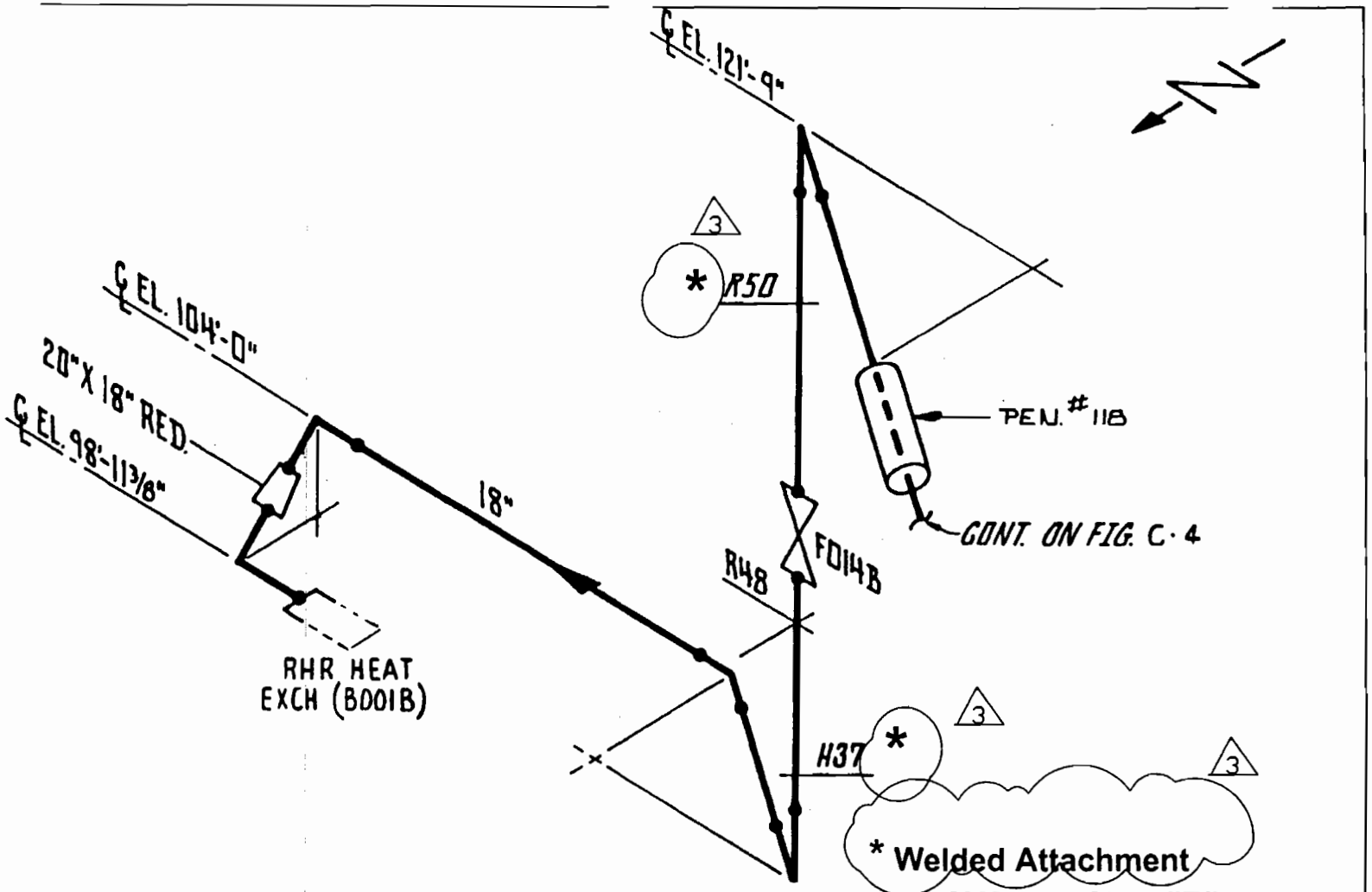

RHR SYSTEM SIDE "B"
SERVICE WATER SUPPLY TO
HEAT EXCHANGER AND PUMP
DISCH.
HATCH 2. CLASS 3
LOCATION: S.E. DIAGONAL

NOTES:

1. PIPE SUPPORT NUMBERS PRECEDED BY 2E11-RSW-.
2. REF. ISOMETRIC H-26822 REV. 1, REF. F-5 3

FIGURE C-5

3	9-20-04	SM	MB	DOS
Rev.	Date	By	CHK'D	APP.1

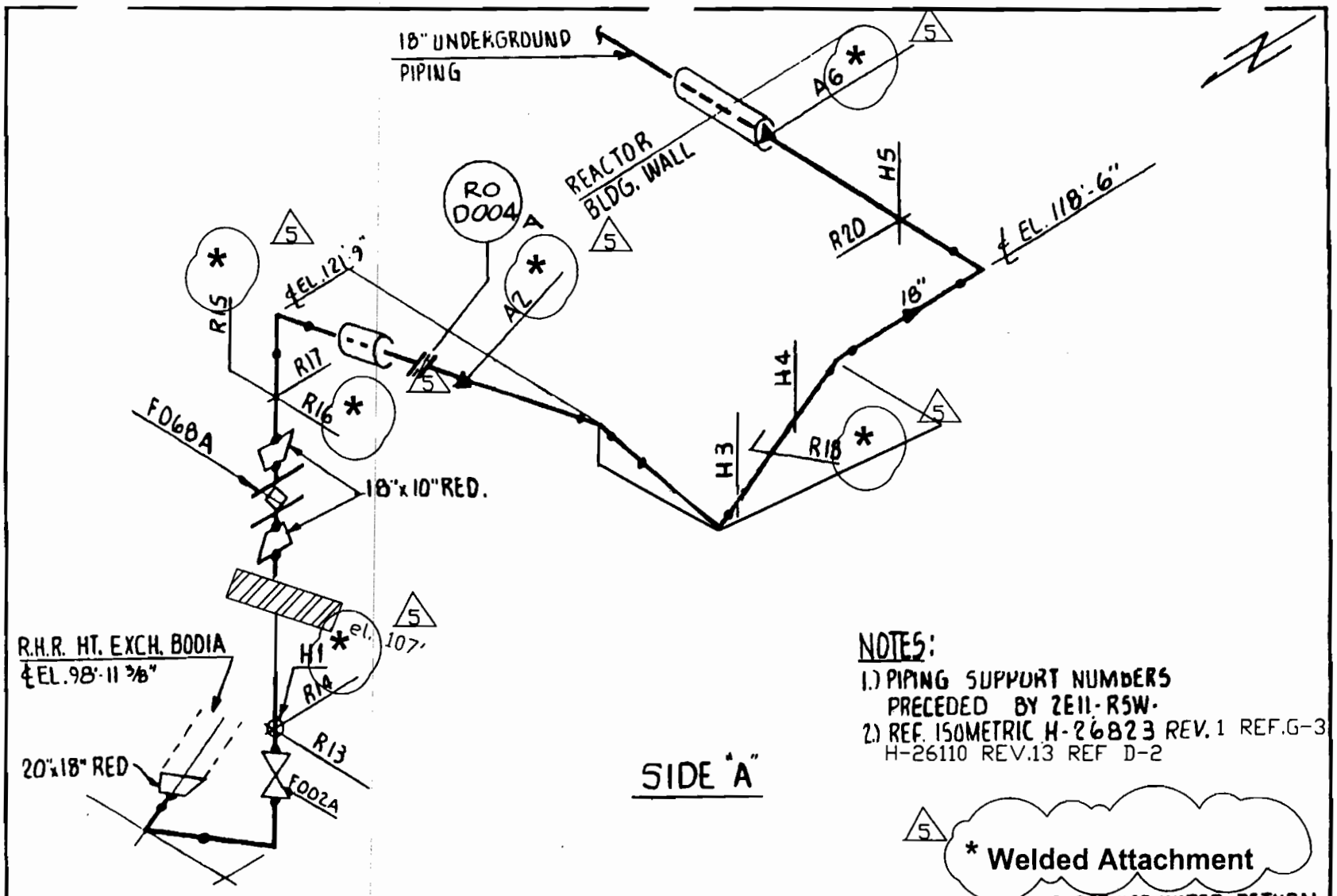

REV.	DATE	BY	CHK'D	APPR. 1
5	10-13-04	TAS	MB	DDS
3	1-05-01	RPW	BKJ	DRG
2	11-30-90	WGS	WS	WHC
1	4-13-87	DST	BKG	[illegible]
4	1-05-01	RPW	BKJ	DRG

FIGURE C-7

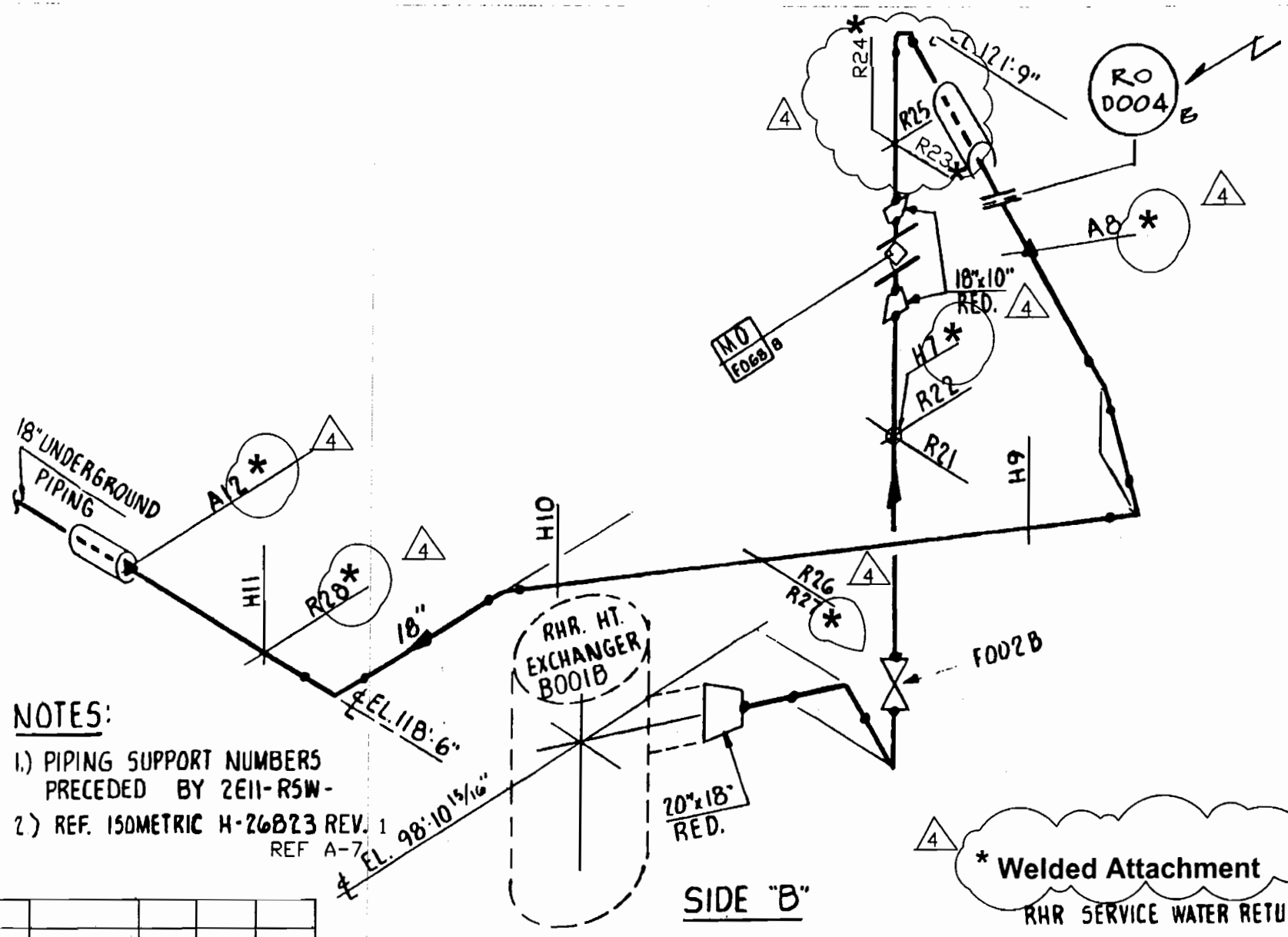

NOTES:

1.) PIPING SUPPORT NUMBERS PRECEDED BY 2E11-RSW-

2.) REF. ISOMETRIC H-26823 REV. 1
REF A-7

4	9-20-04	SM	MB	DOS
Rev.		By	CHK'D	APP.1

FIGURE C-8

HATCH 2 CLASS 3

LOCATION: REACTOR BLDG.

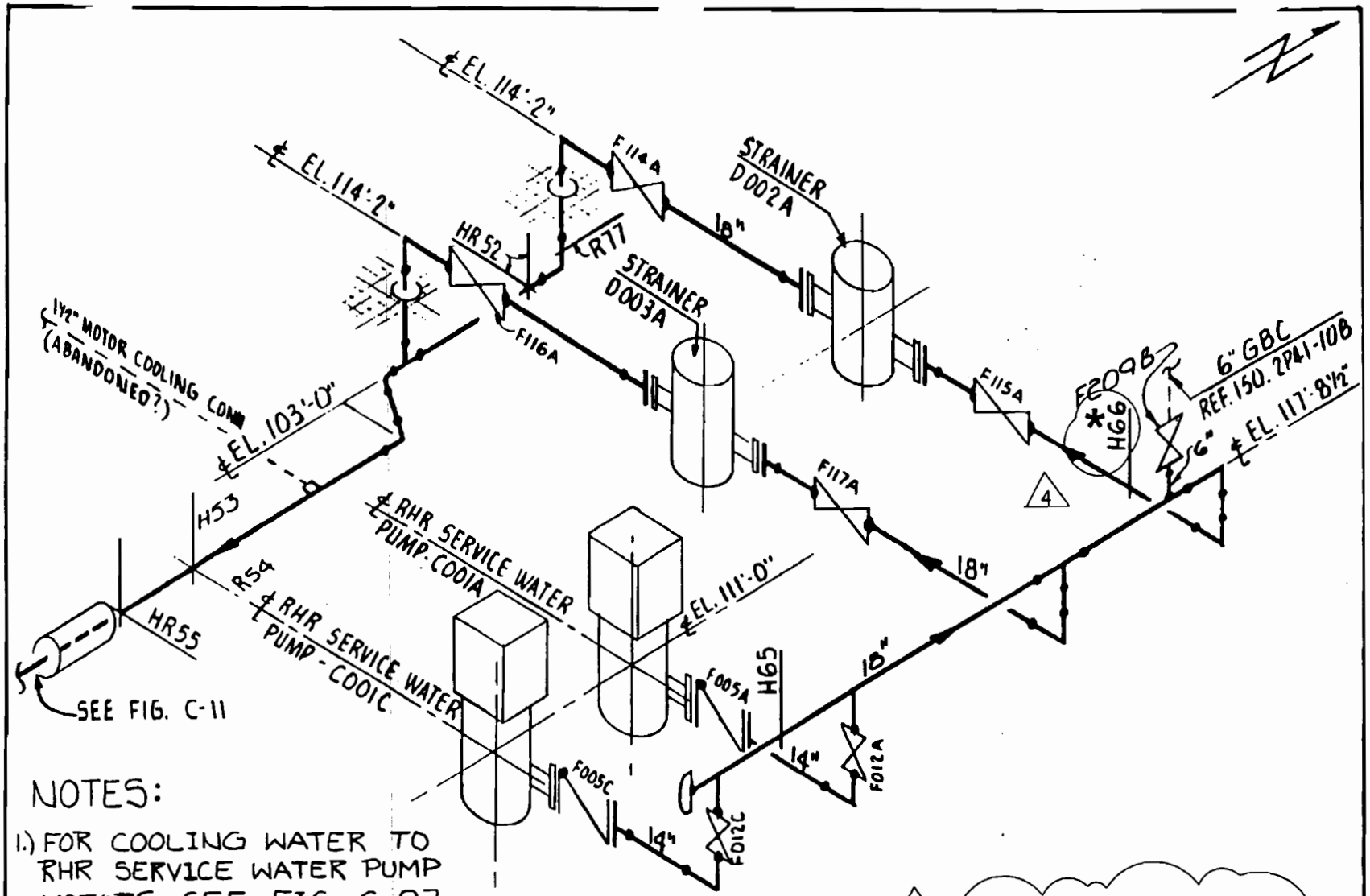

REV.	DATE	BY	CHK'D	APPR. 1
2	11-30-90	WGS	WS	WHC
4	9-15-04	SM	MB	DDS
3	6-30-99	RPW	BKJ	DRG

FIGURE C-9

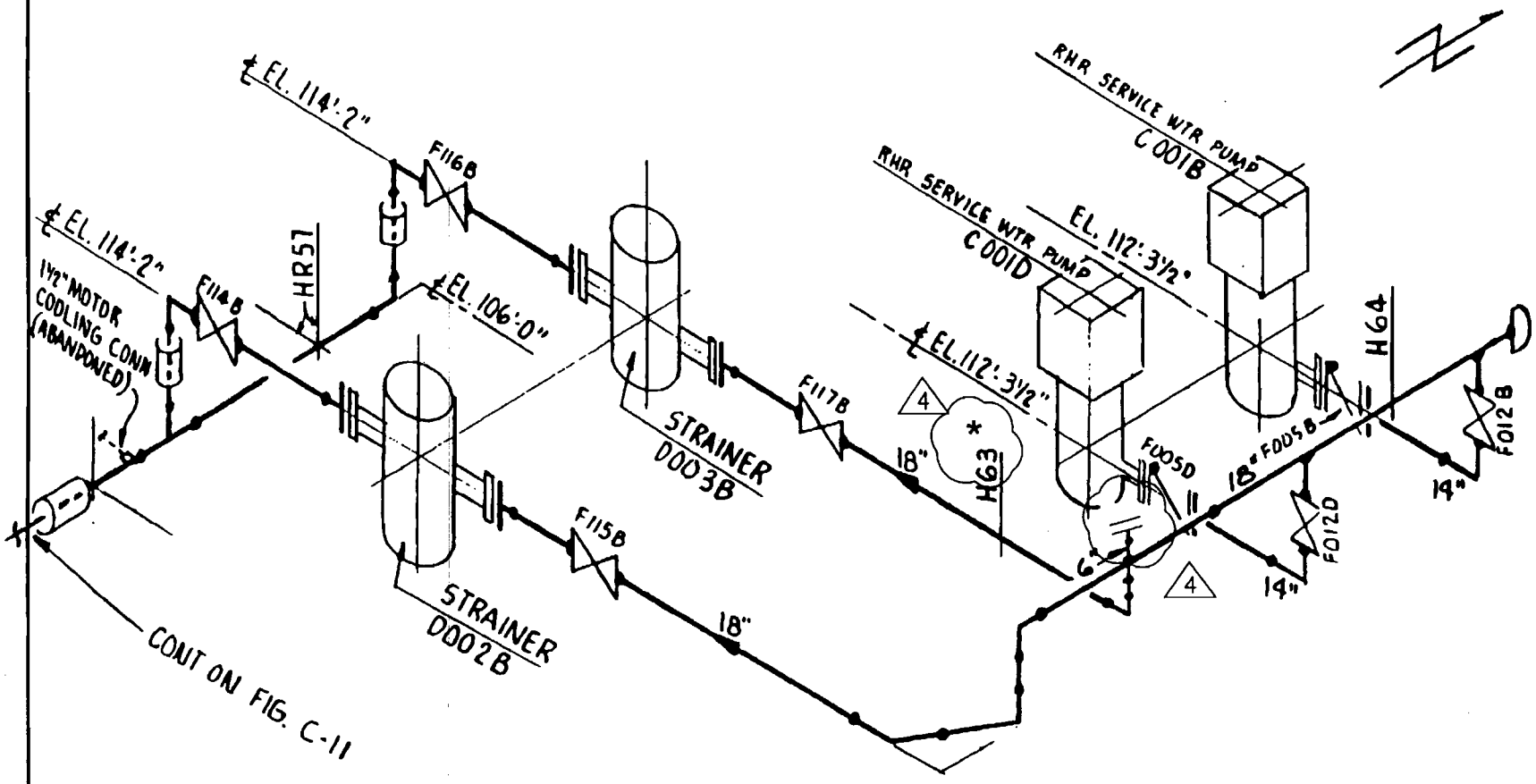

NOTES:

1.) PIPE SUPPORT NUMBERS PRECEDED BY 2E11-RSW-

2.) REF. ISOMETRIC H-26833 REV. 1, REF. D-9 4

3.) FOR COOLING WATER TO ~~RHR~~ SERVICE WATER PUMP MOTOR SEE FIG. C-97

REV.	DATE	BY	CHK'D	APPR. 1
2	11-30-90	RXS	WS	WHC
4	9-15-04	SM	MB	ODS
3	6-30-99	RPW	BKJ	DRG

FIGURE C-10

4 * Welded Attachment

R.H.R. SERVICE WATER
HATCH 2 — CLASS 3
LOCATION: RIVER INTAKE STRUCTURE

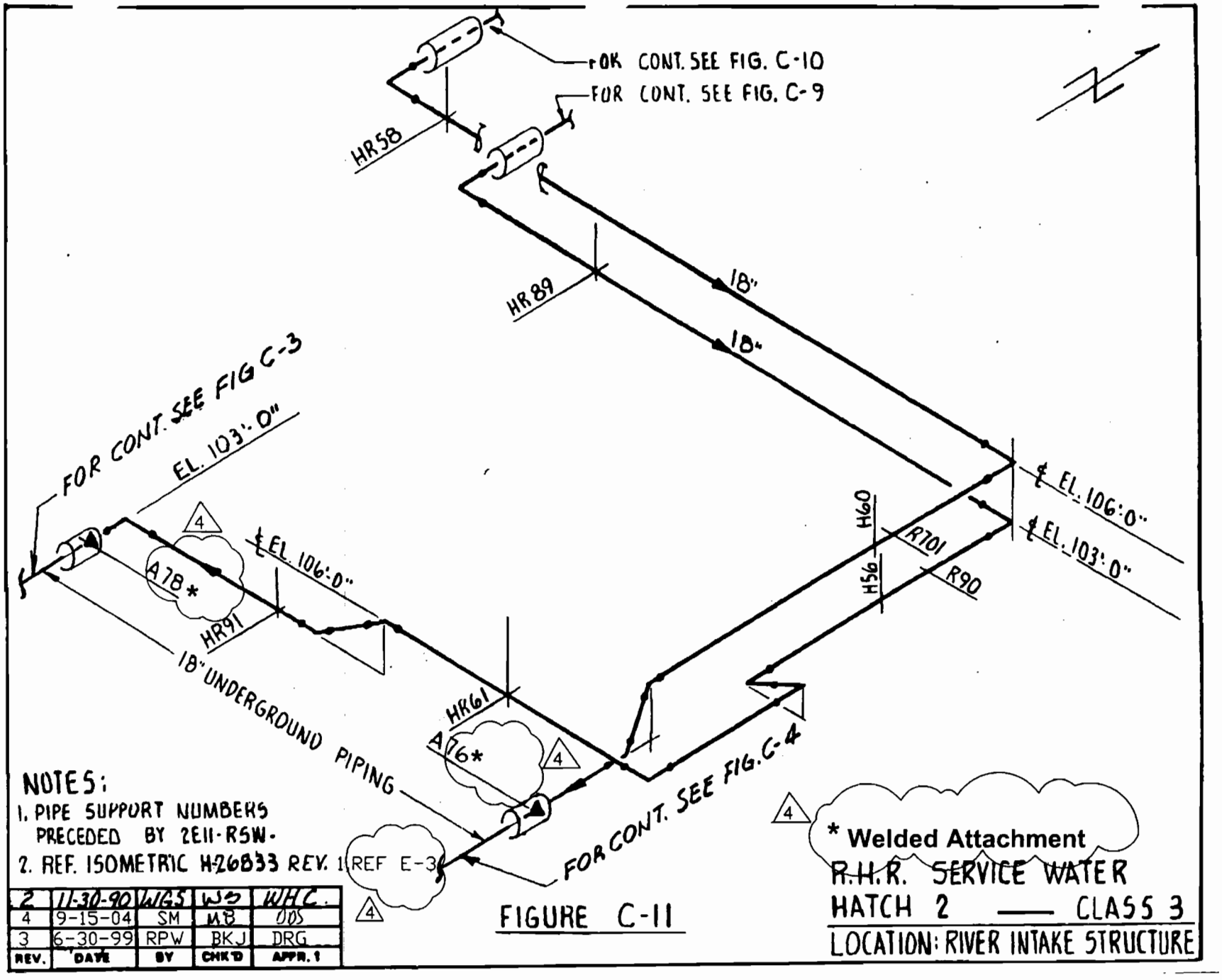

NOTES:

1. PIPE SUPPORT NUMBERS PRECEDED BY 2E11-RSW-
2. REF. ISOMETRIC H-26833 REV. 1

REV.	DATE	BY	CHK'D	APPR. 1
2	11-30-90	WIGS	WS	WHC.
4	9-15-04	SM	MB	DDS
3	6-30-99	RPW	BKJ	DRG

FIGURE C-11

R.H.R. SERVICE WATER
HATCH 2 —— CLASS 3
LOCATION: RIVER INTAKE STRUCTURE

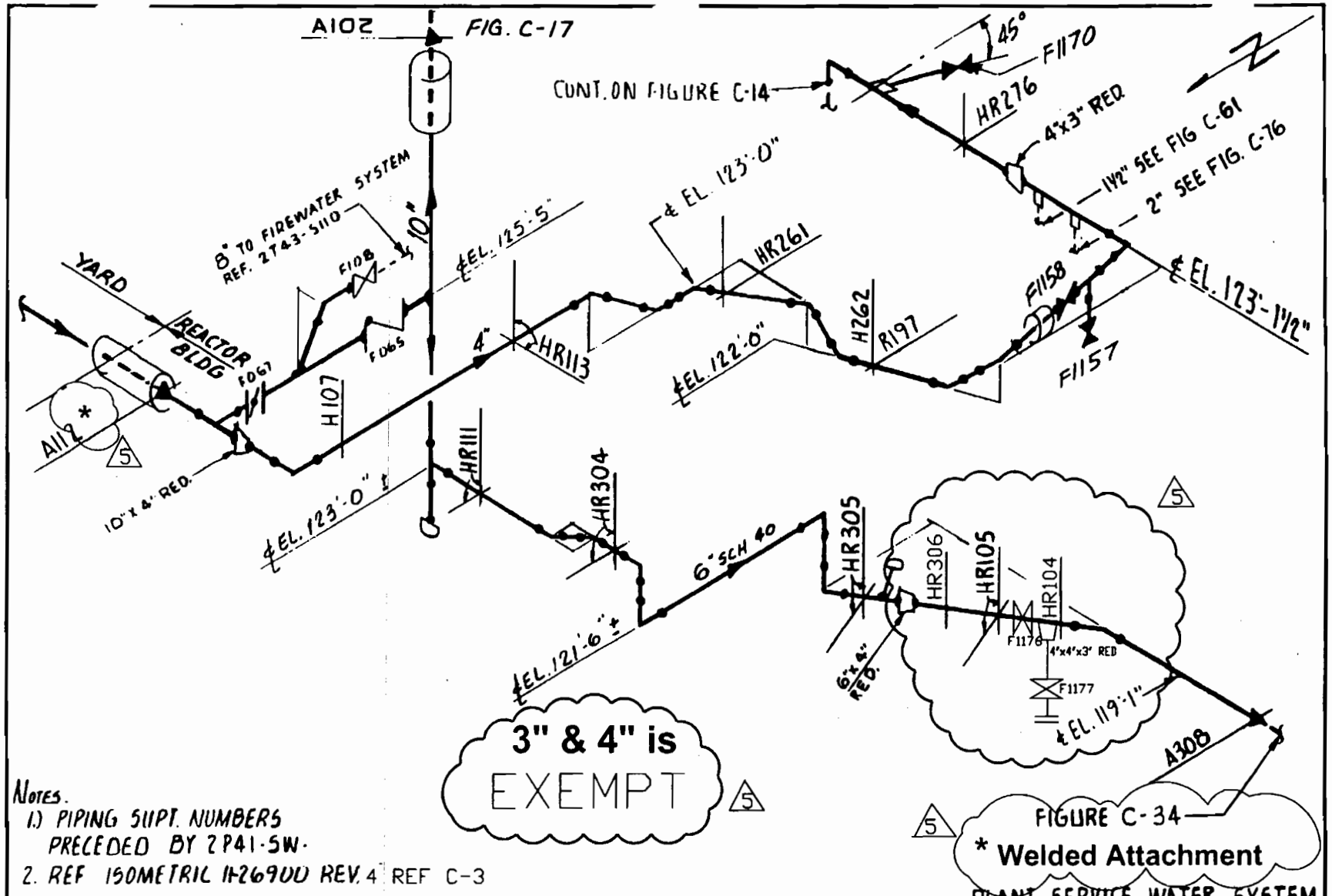

NOTES.
1.) PIPING SLIPT. NUMBERS PRECEDED BY 2P41-SW-
2. REF ISOMETRIC 1-26900 REV. 4 REF C-3

REV	DATE	BY	CHK'D	APPR. 1
5	9-15-04	SM	MB	ODS
4	6-30-99	RPW	BKJ	DRG
2	11-30-90	WGS	WG	WHC
1	4-13-87	BST	BKG	[illegible]
3	9-23-92	WS	WC	[illegible]

FIGURE C-15

PLANT SERVICE WATER SYSTEM
EAST SIDE
HATCH 2 — CLASS 3
LOCATION: REACTOR BUILDING

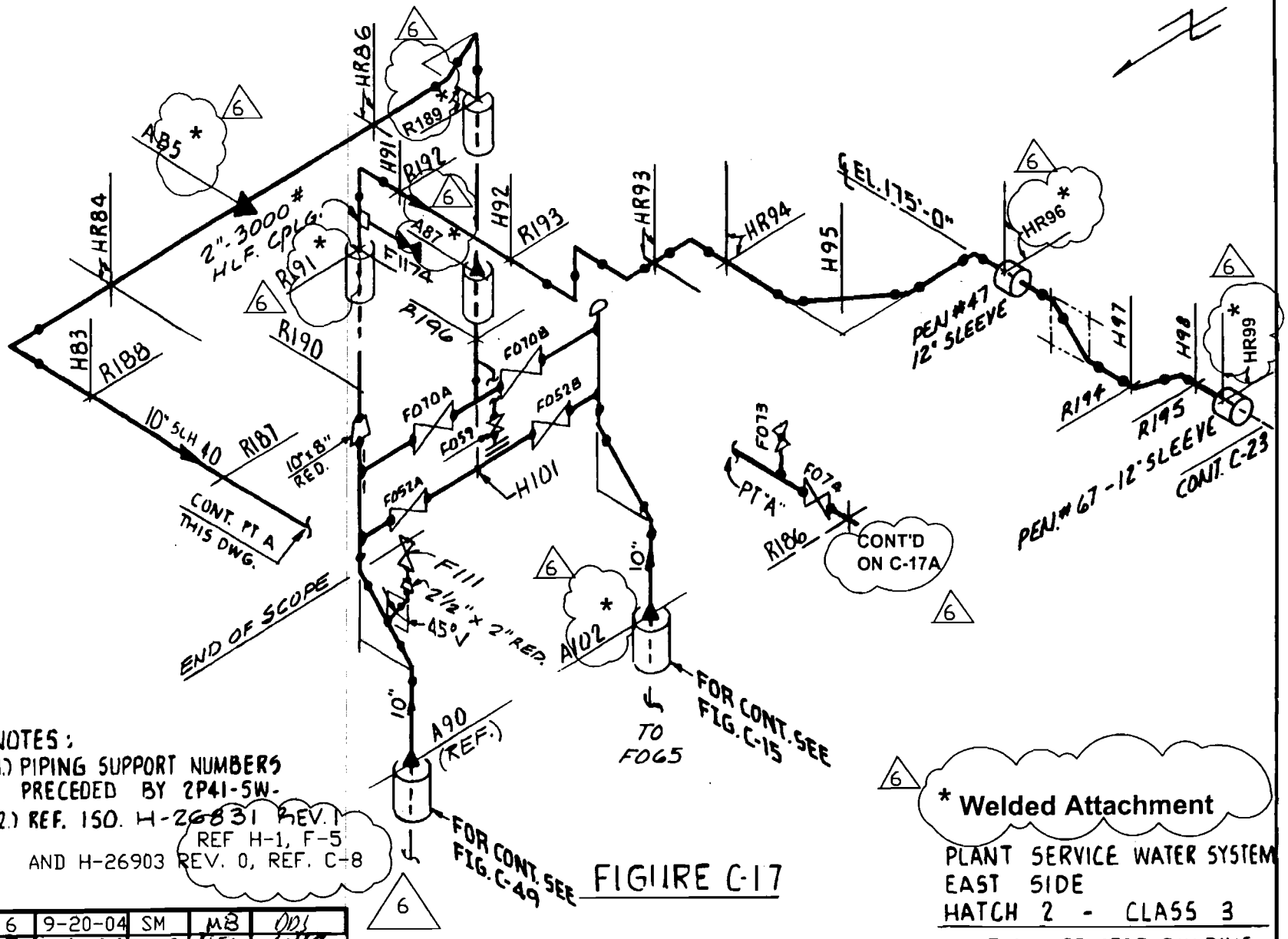

NOTES:

1.) PIPING SUPPORT NUMBERS PRECEDED BY 2P41-5W-

2.) REF. ISO. H-26831 REV. 1 REF H-1, F-5 AND H-26903 REV. 0, REF. C-8

FIGURE C-17

* Welded Attachment

PLANT SERVICE WATER SYSTEM
EAST SIDE
HATCH 2 - CLASS 3

LOCATION: REACTOR BUILDING

REV	DATE	BY	CHK'D	APPR.1
6	9-20-04	SM	MB	ODS
5	6/25/96	WS	KTN	WHC
4	9/27/93	WS	[illegible]	WHC
3	7-23-92	WS	WHC	DMS

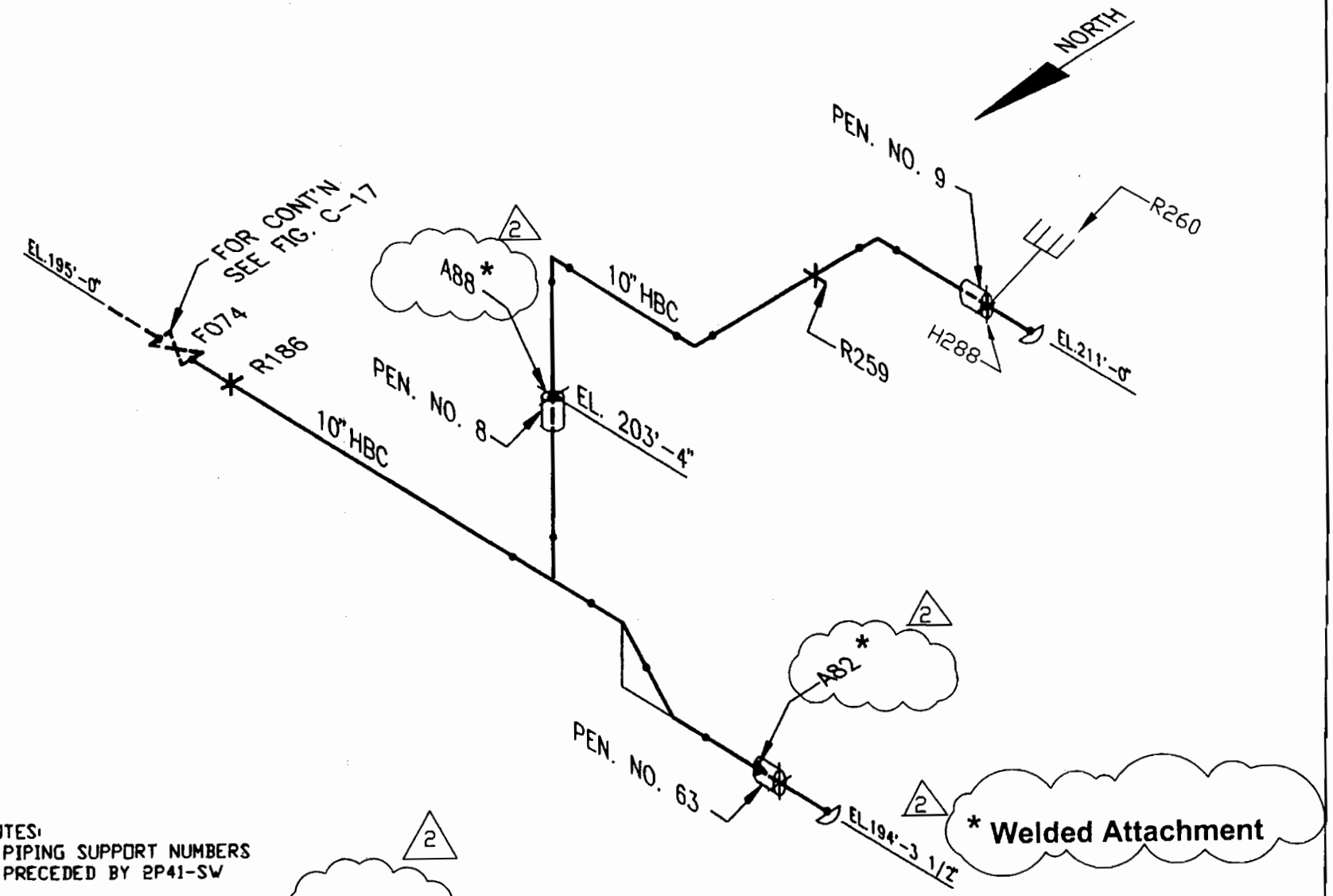

NOTES:
1. PIPING SUPPORT NUMBERS PRECEDED BY 2P41-SW
2. REF. ISOMETRIC H-26831 REV.1, REF. E-6

REV	DATE	BY	CHK'D	APPR.1
2	9-20-04	SM	MB	DDJ
1	2-15-01	WS	KSJ	DMS
0	7/2/96	WS	KFW	WC

FIGURE C-17A

PLANT SERVICE WATER
EAST SIDE
HATCH 2 - CLASS 3
LOCATION: REACTOR BUILDING

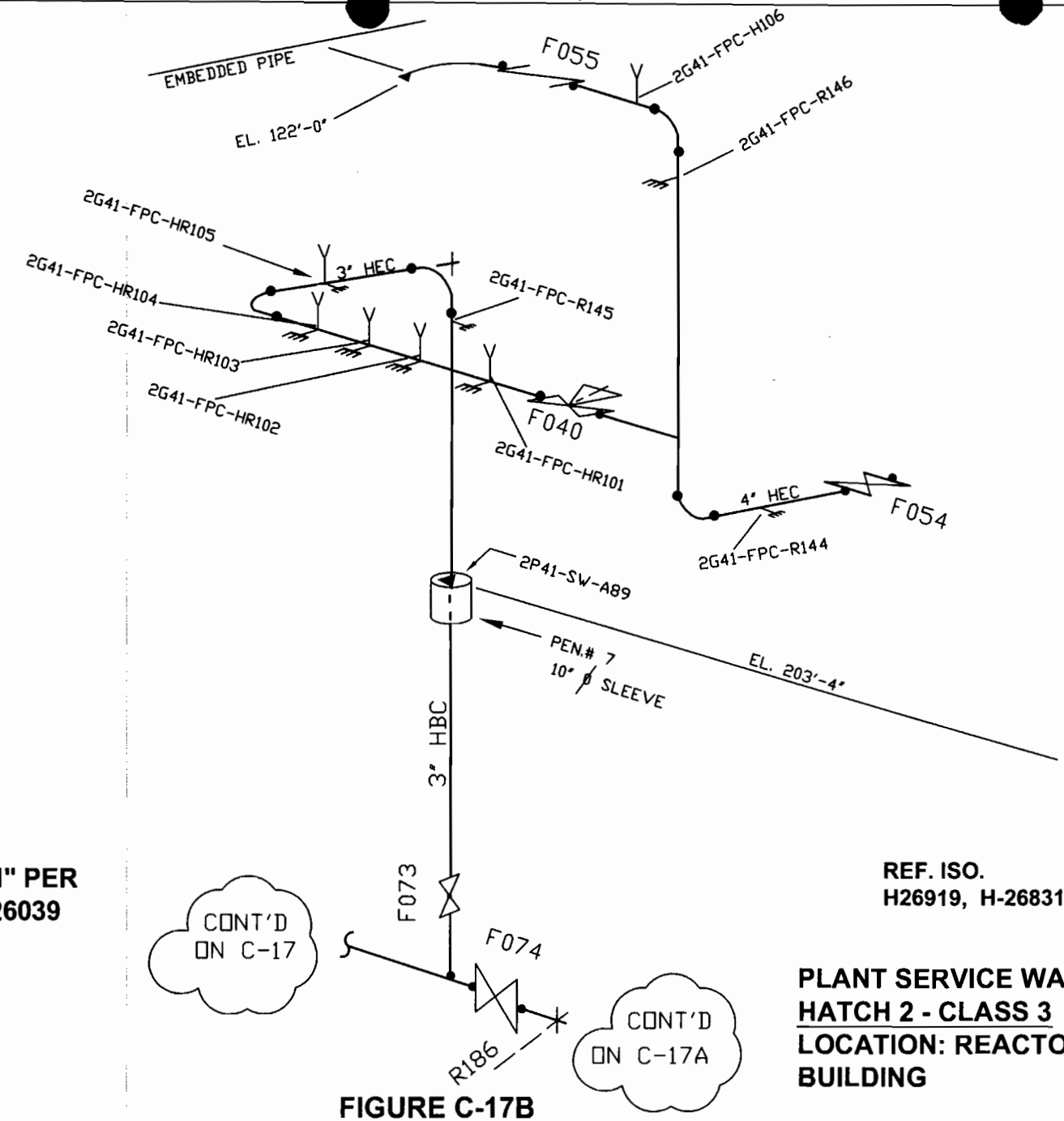

NOTES:

1. PIPING IS DESIGNATED AS "N" PER BOUNDRY DIAGRAHAM HB-26039

REF. ISO.
H26919, H-26831

PLANT SERVICE WATER
HATCH 2 - CLASS 3
LOCATION: REACTOR BUILDING

FIGURE C-17B

1	5-24-06	RAM	SMM	MB
Rev.	Date	By	CHK'D	APP.1

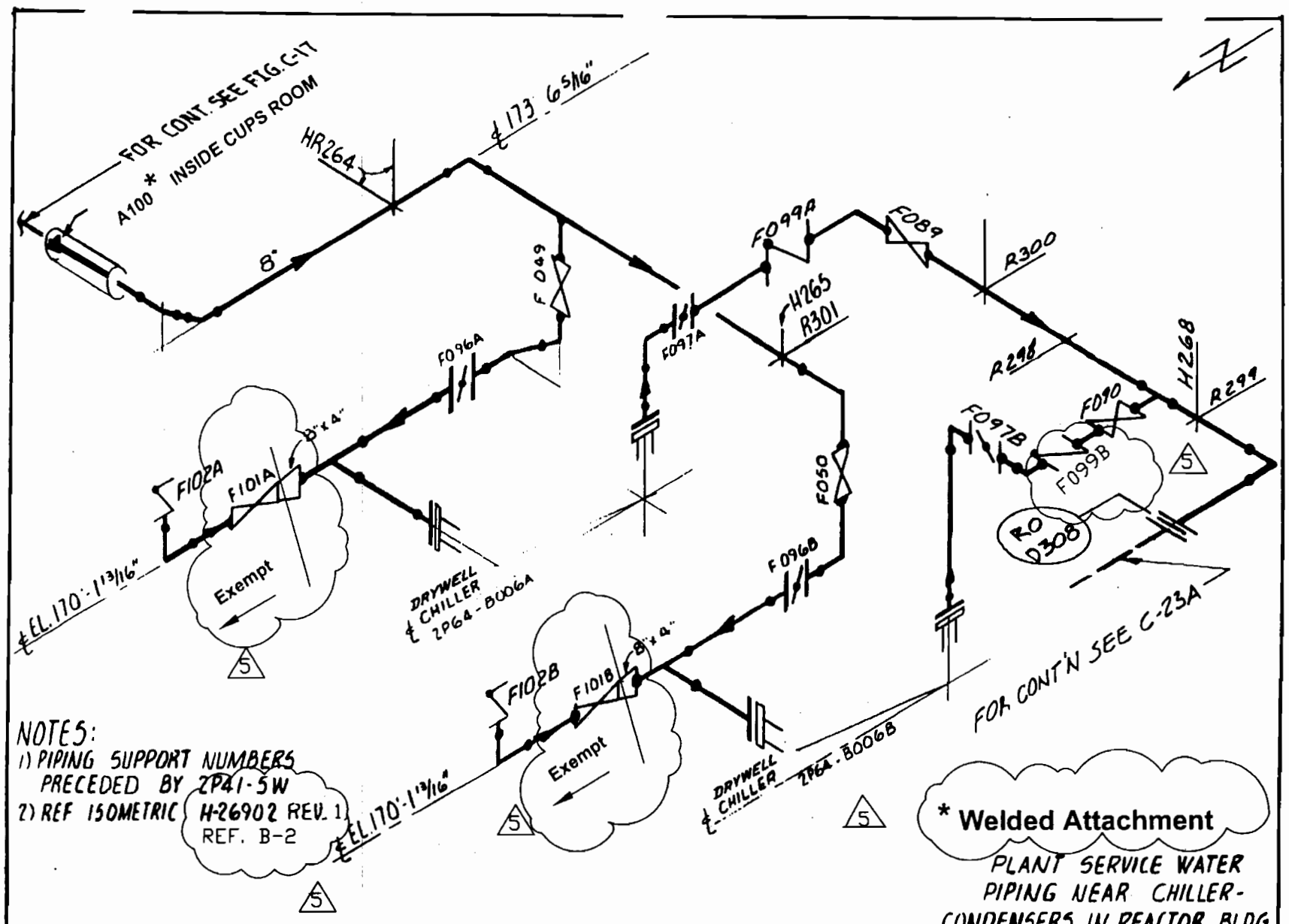

REV.	DATE	BY	CHK'D	APPR. 1
5	9-21-04	SM	MB	DDS
4	6/25/96	WS	KFW	WHC
3	6-10-91	WBS	WS	WHC

FIGURE C-23

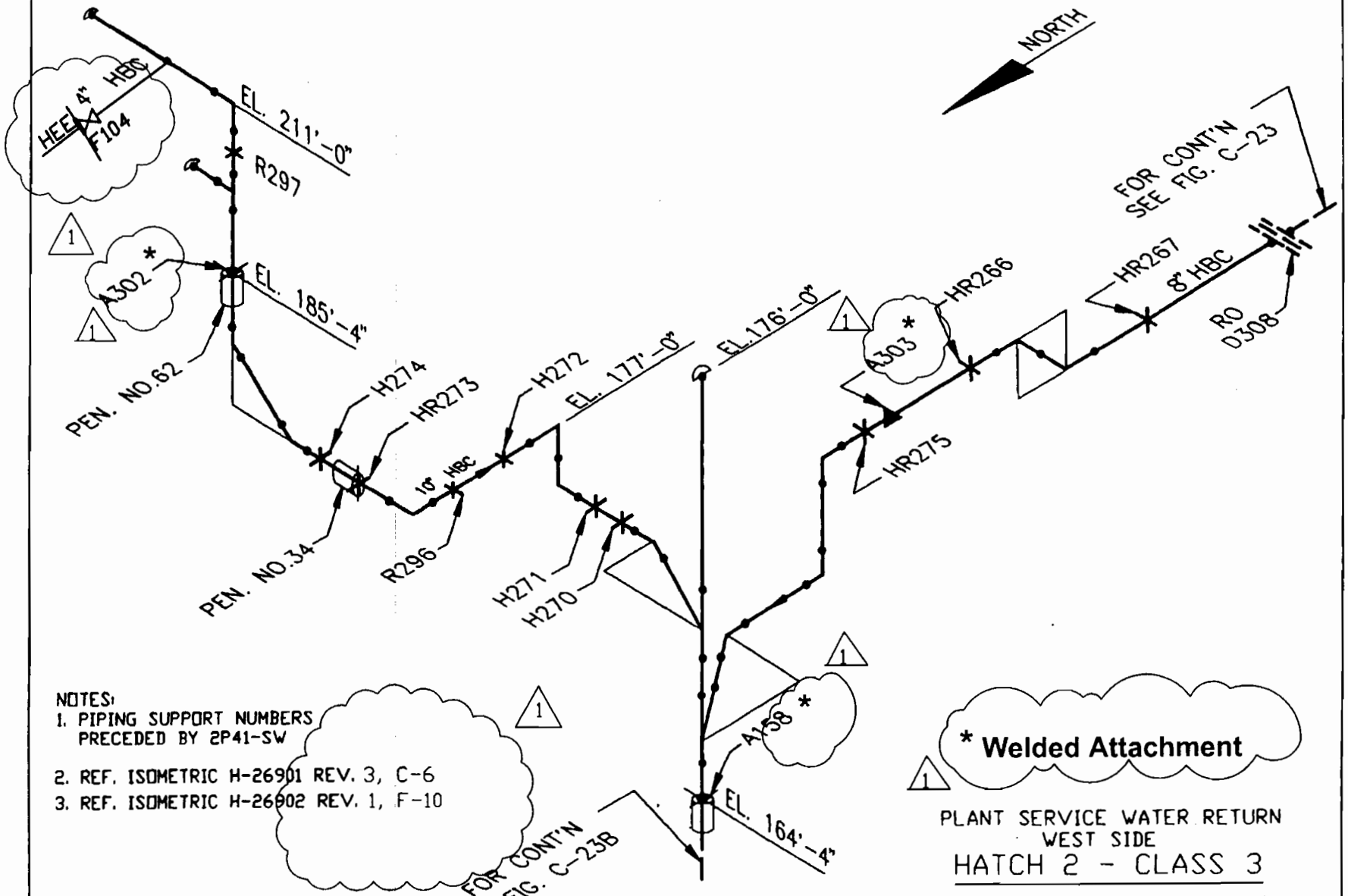

NOTES:
1. PIPING SUPPORT NUMBERS PRECEDED BY 2P41-SW
2. REF. ISOMETRIC H-26901 REV. 3, C-6
3. REF. ISOMETRIC H-26902 REV. 1, F-10

REV	DATE	BY	CHK'D	APPR.1
1	9-21-04	SM	MB	ODS
0	7/2/96	WS	KFW	WC

FIGURE C-23A

PLANT SERVICE WATER RETURN
WEST SIDE
HATCH 2 - CLASS 3

LOCATION: REACTOR BUILDING

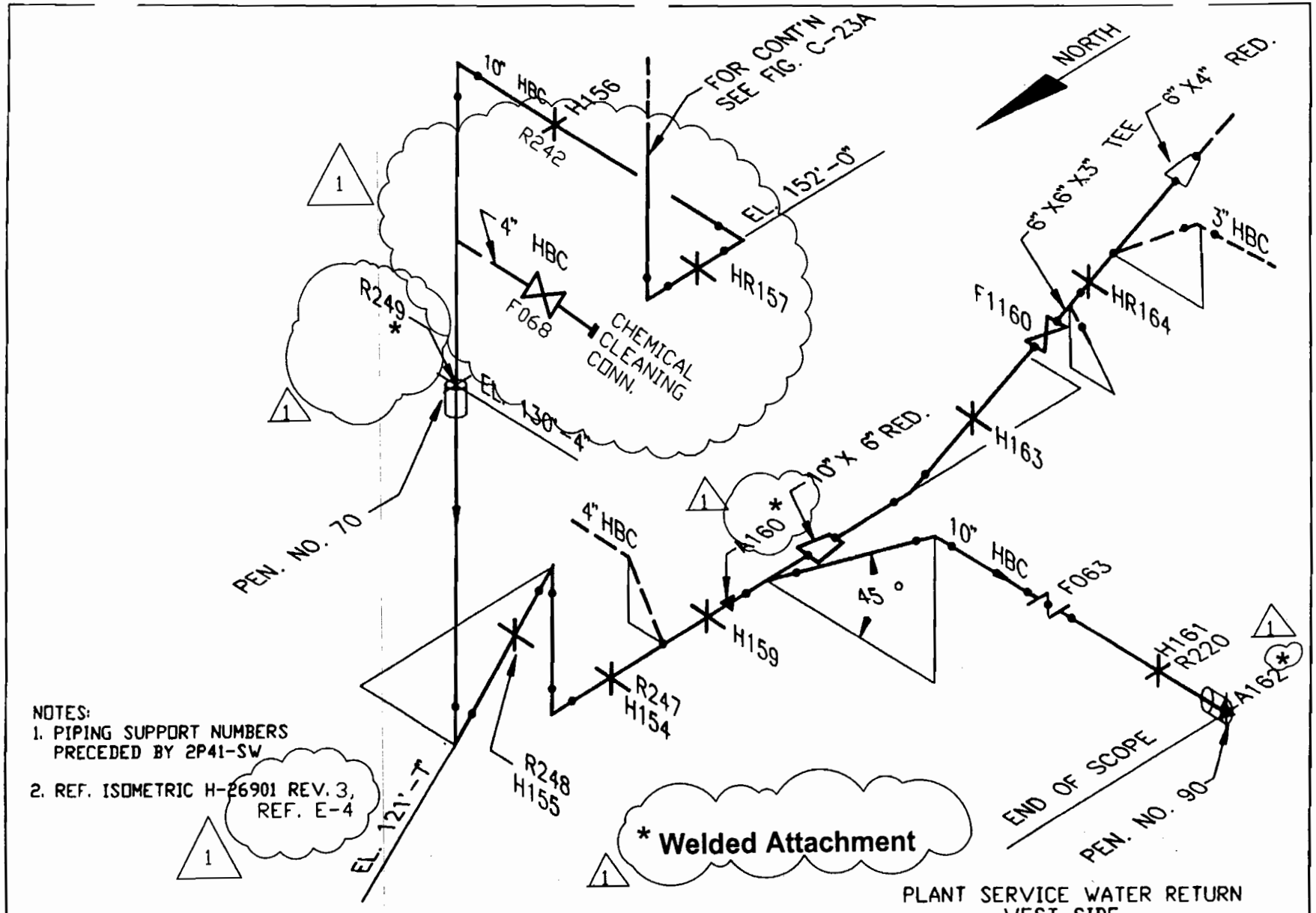

NOTES:
1. PIPING SUPPORT NUMBERS PRECEDED BY 2P41-SW
2. REF. ISOMETRIC H-26901 REV. 3, REF. E-4

REV	DATE	BY	CHK'D	APPR.1
1	9-21-04	SM	MB	ODS
0	7/2/96	WS	KFW	WC

FIGURE C-23B

PLANT SERVICE WATER RETURN
WEST SIDE
HATCH 2 - CLASS 3
LOCATION: REACTOR BUILDING

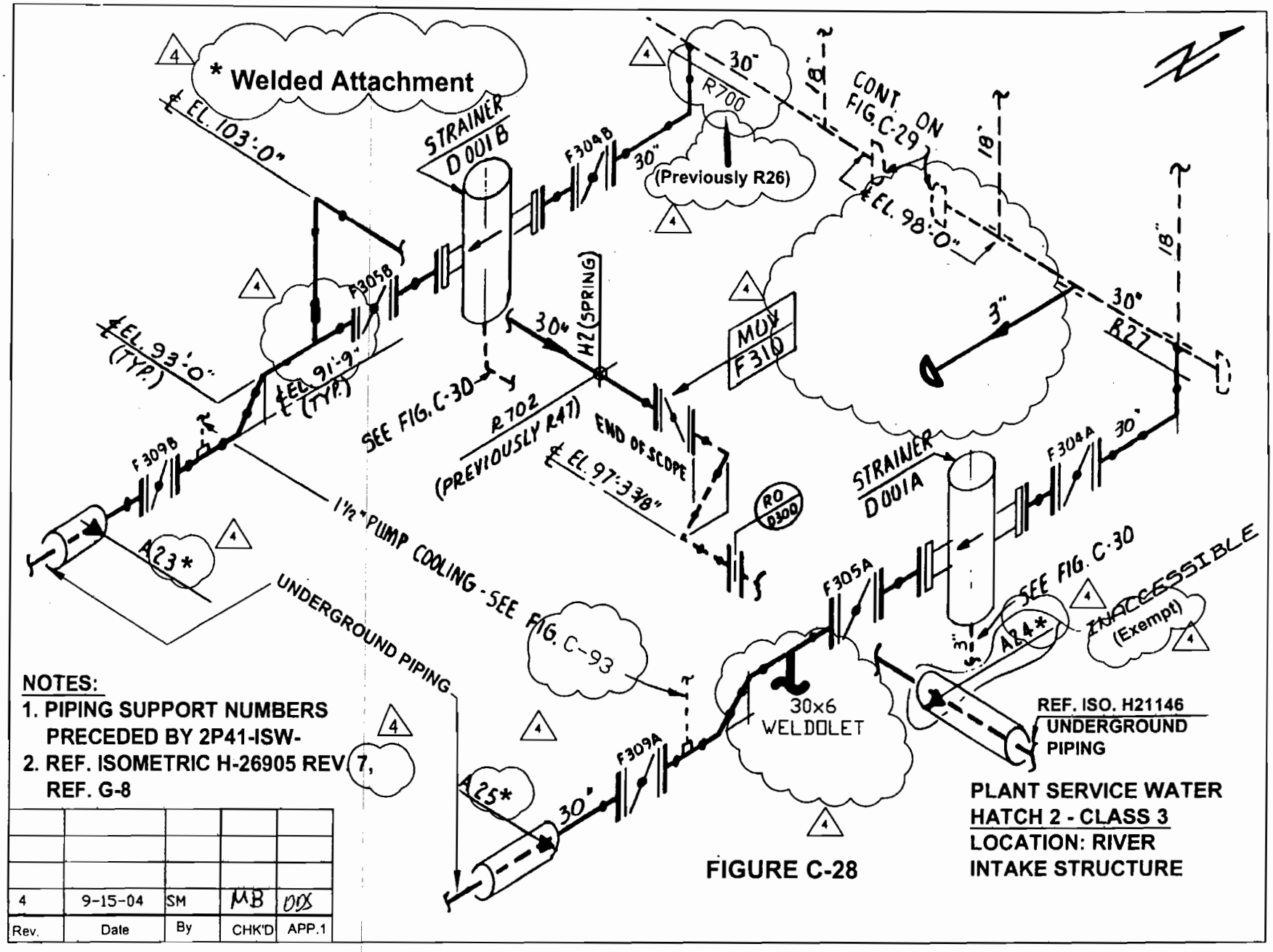

NOTES:

1. PIPING SUPPORT NUMBERS PRECEDED BY 2P41-ISW-
2. REF. ISOMETRIC H-26905 REV 7, REF. G-8

4	9-15-04	SM	MB	DDS
Rev.	Date	By	CHK'D	APP.1

FIGURE C-28

PLANT SERVICE WATER
HATCH 2 - CLASS 3
LOCATION: RIVER INTAKE STRUCTURE

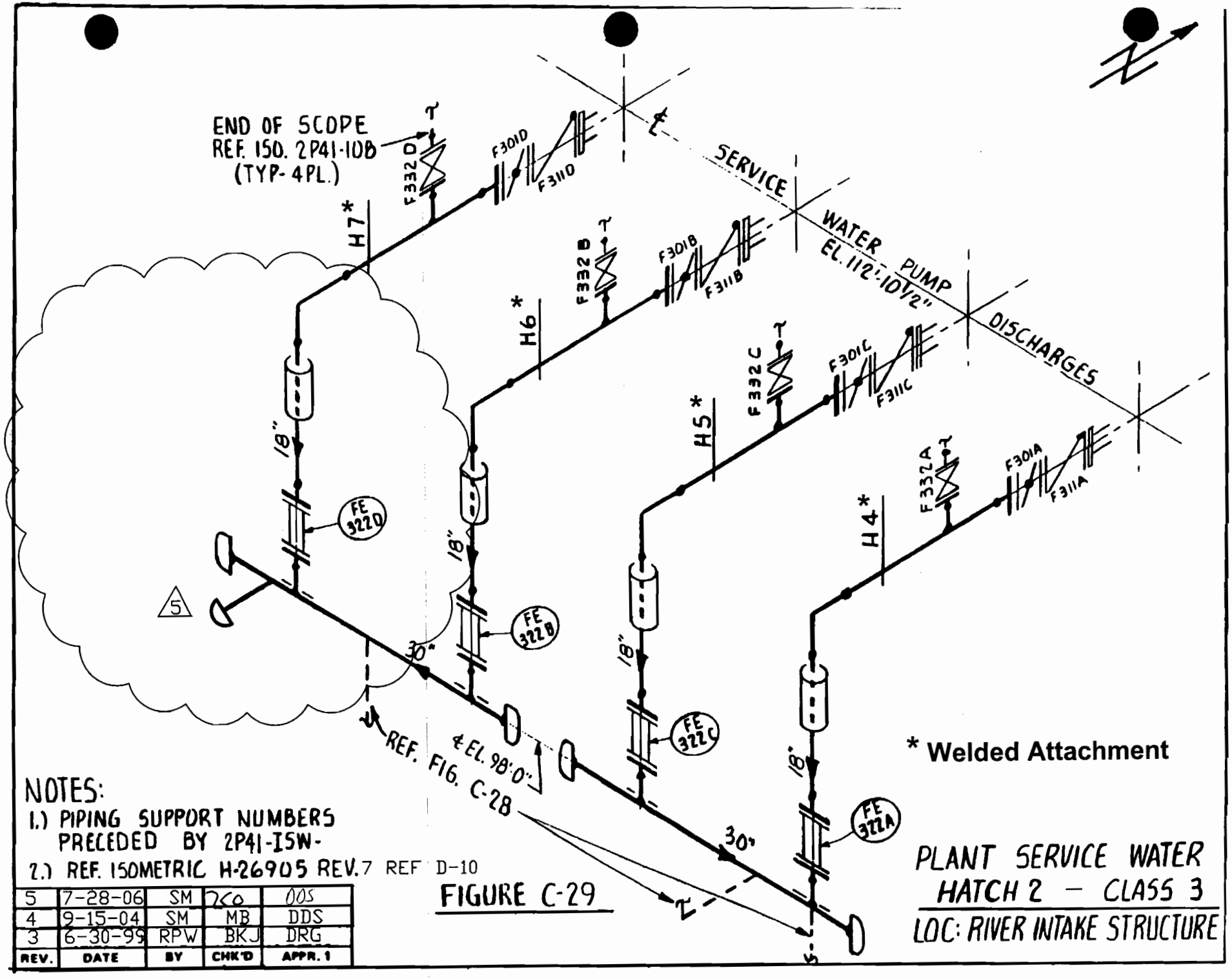

REV.	DATE	BY	CHK'D	APPR. 1
5	7-28-06	SM	260	005
4	9-15-04	SM	MB	DDS
3	6-30-99	RPW	BKJ	DRG

FIGURE C-29

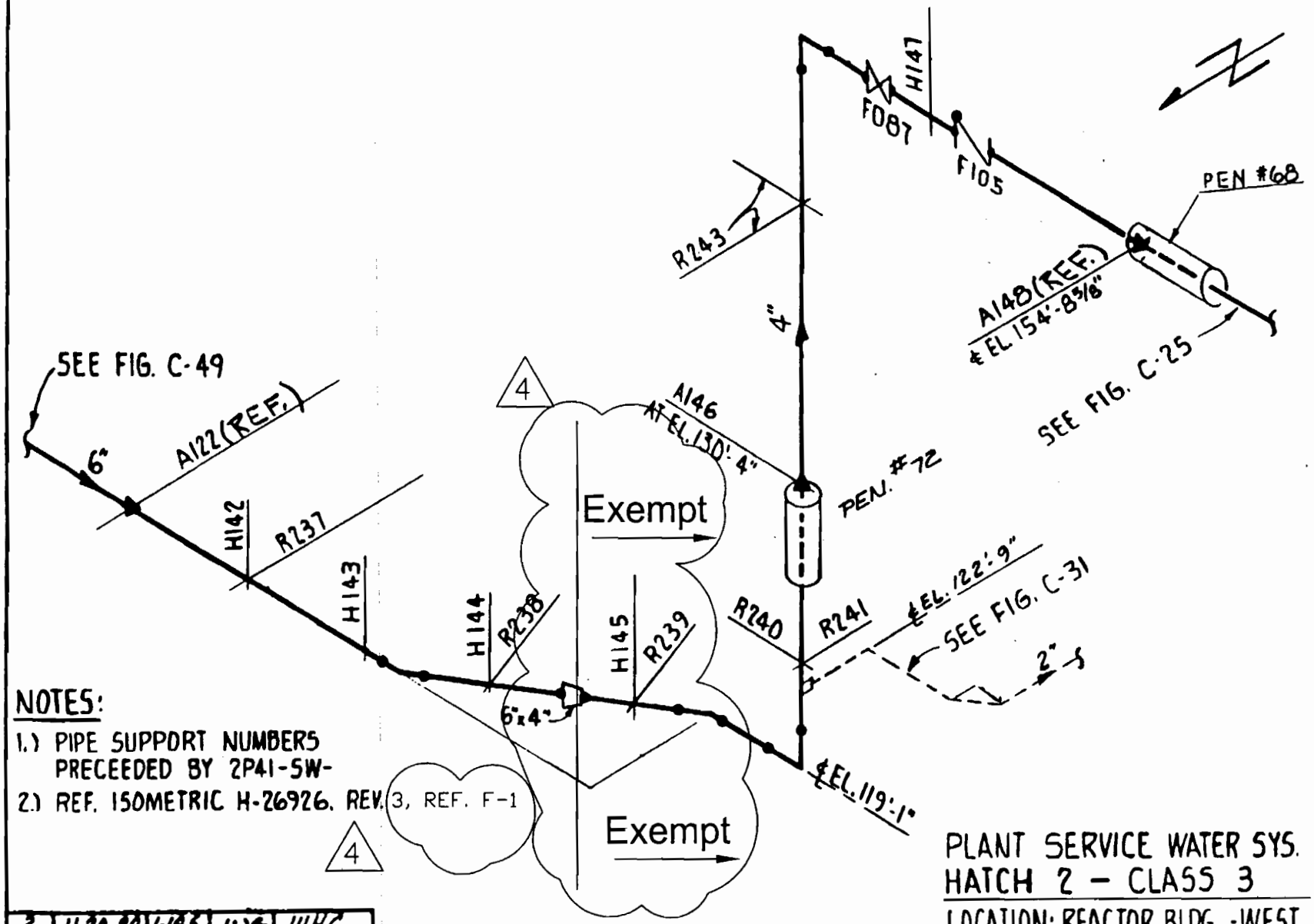

NOTES:

1.) PIPE SUPPORT NUMBERS PRECEEDED BY 2P41-SW-

2.) REF. ISOMETRIC H-26926, REV. 3, REF. F-1

4

REV.	DATE	BY	CHK'D	APPR.1
2	11-30-90	WBS	WS	WHC
4	9-21-04	SM	MB	DDS
3	9-23-92	WS	WC	[illegible]

FIGURE C-32

PLANT SERVICE WATER SYS.
HATCH 2 - CLASS 3
LOCATION: REACTOR BLDG. -WEST

NOTE: ING SUPPORT NUMBERS
PROCEDED BY 2P41-DSW-
REF. DWG. H-26907 REV. 2, REF. F-6 3

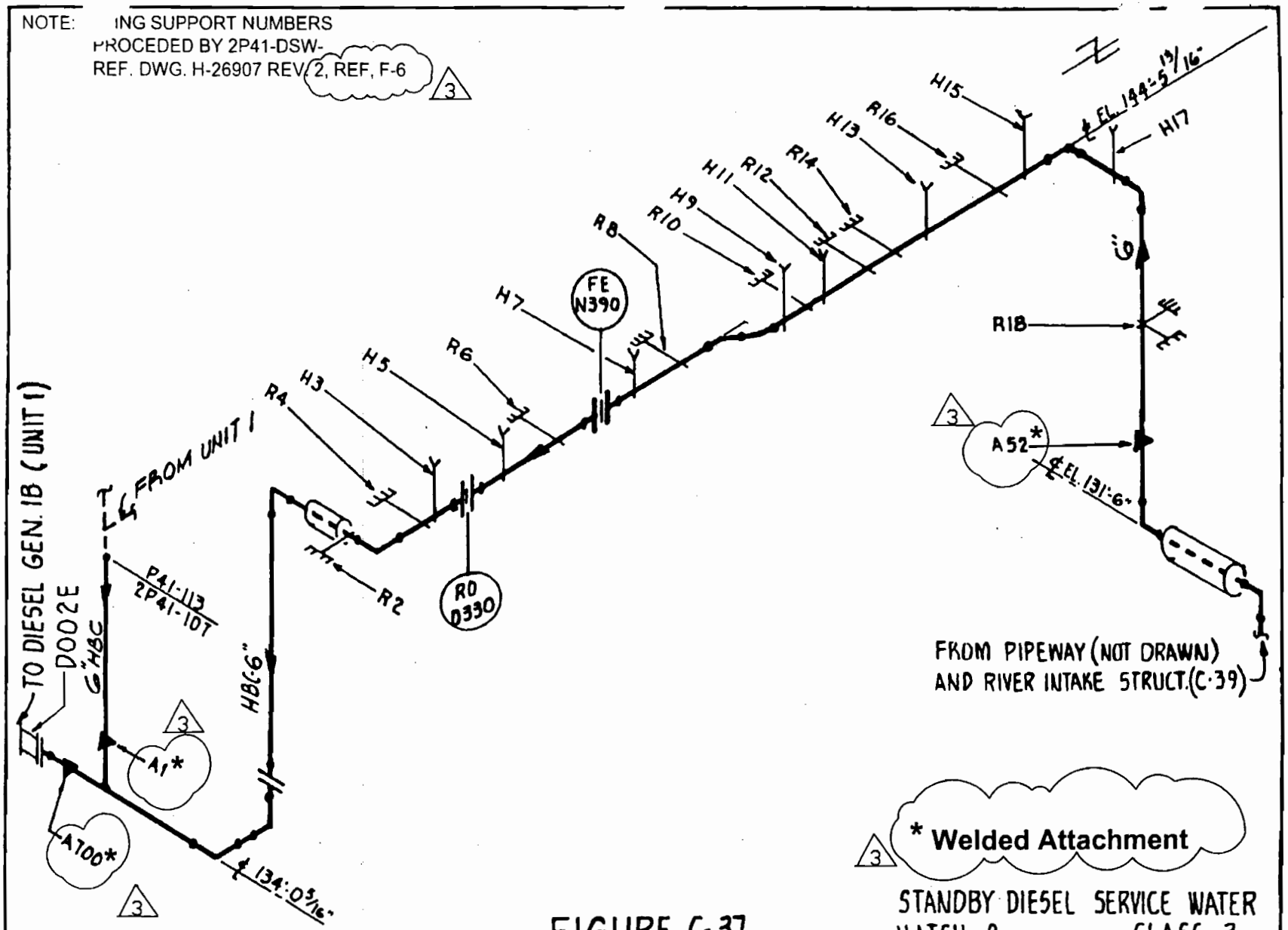

REV.	DATE	BY	CHK'D	APPR. 1
2	11-30-90	WGS	WS	WHC
1	4-13-87	BST	BKB	[illegible]
3	10-13-04	SM	MB	DDS

FIGURE C-37

STANDBY DIESEL SERVICE WATER
HATCH 2 — CLASS 3
LOCATION: DIESEL GENERATOR BLDG.

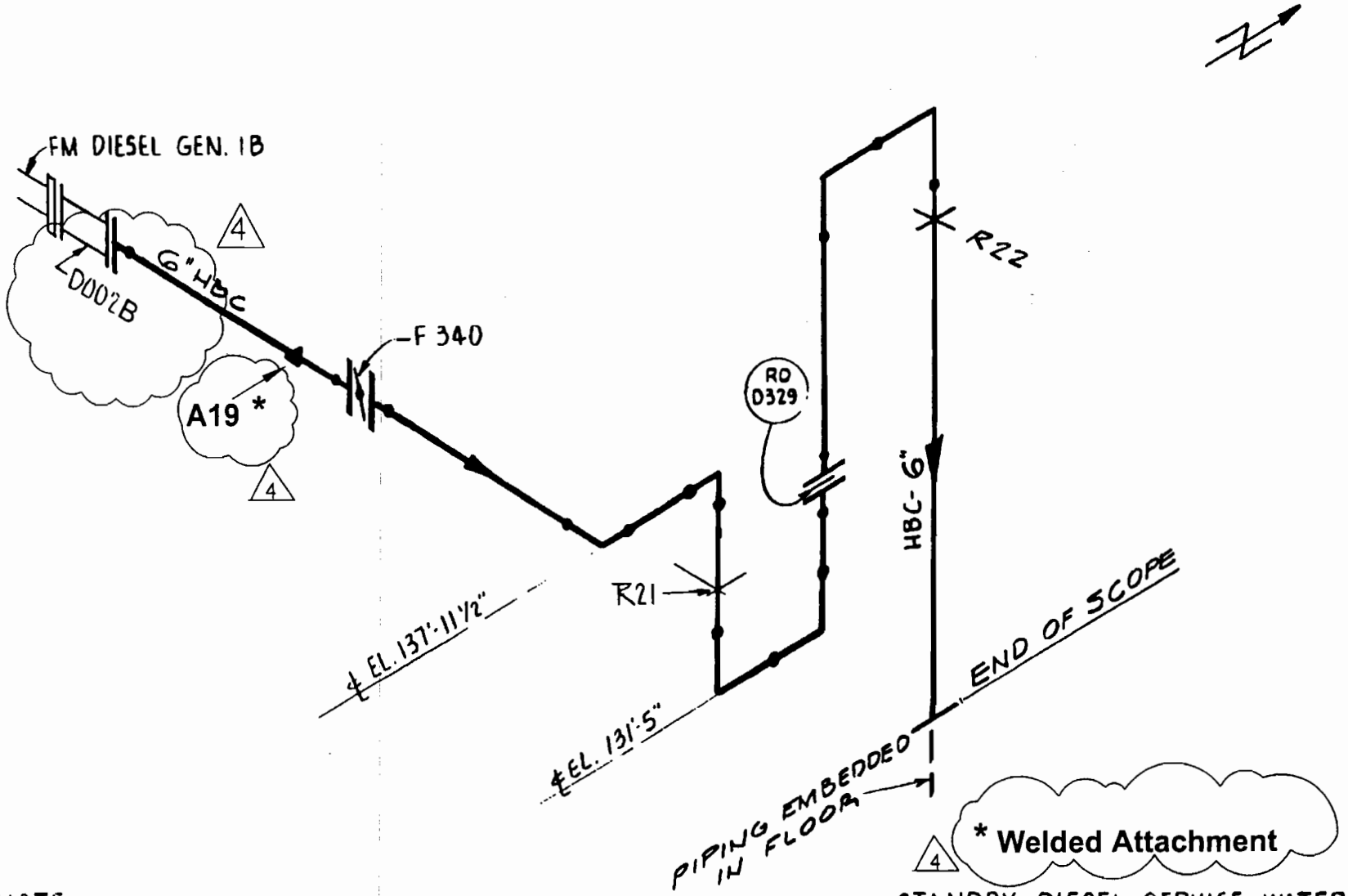

NOTE: 1) PIPING SUPPORT NUMBERS PRELEDED BY 2P41-DSW
2.) REF. 150METRIC H-26907 REV. 2, G-3

FIGURE C-38

4

STANDBY DIESEL SERVICE WATER
HATCH 2 — CLASS 3
LOCATION: DIESEL GENERATOR BLDG.

REV.	DATE	BY	CHK'D	APPR. 1
2	11-30-90	WGS	WS	WHC
4	9-21-04	SM	MB	ODS
3	6/25/96	WS	[illegible]	WHC

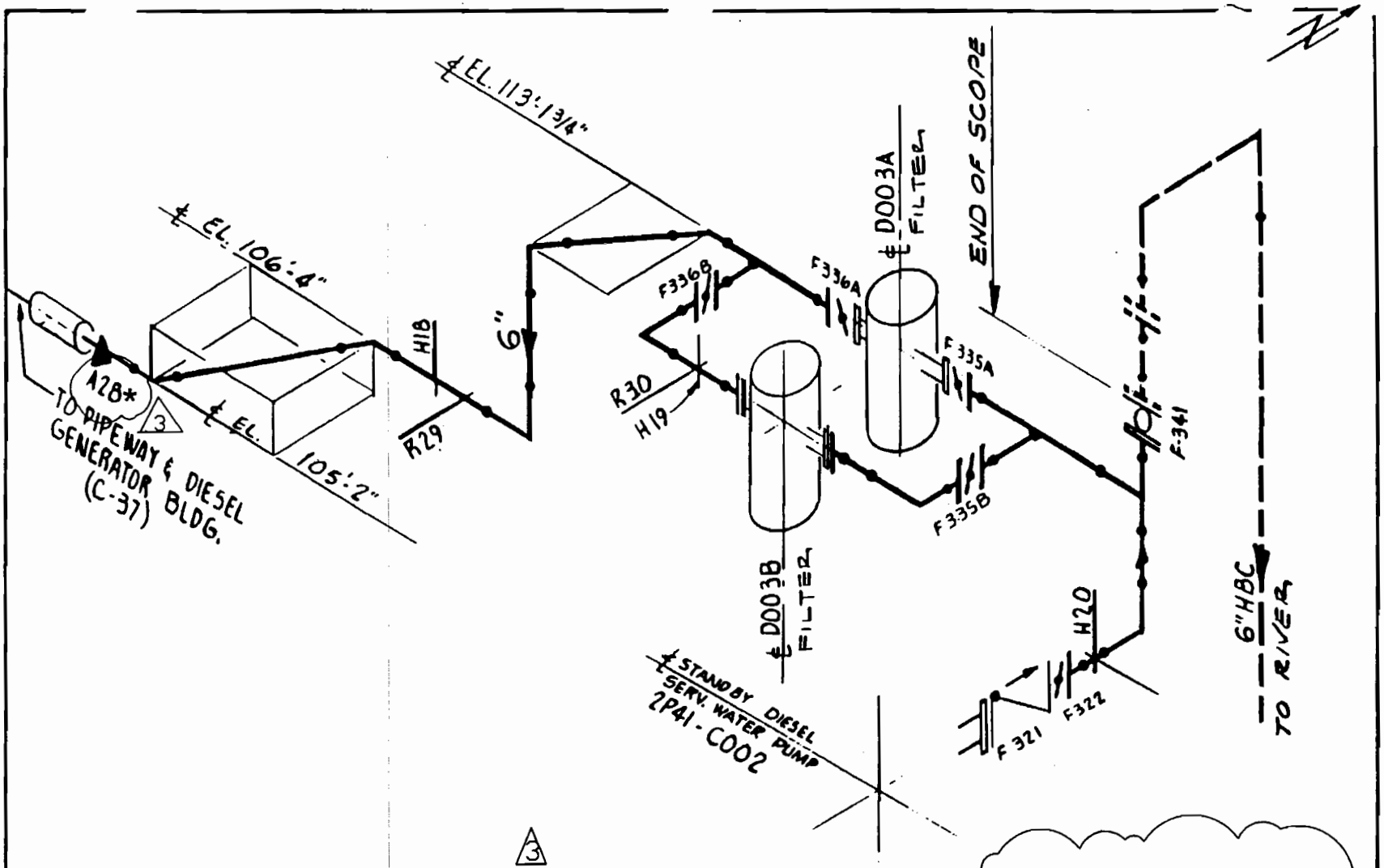

NOTES:

1.) PIPING SUPT. NUMBERS PRECEDED BY 2P41-ISW

2.) REFERENCE DWG H-26907 REV. 2, D-8

FIGURE C-39

* Welded Attachment

STANDBY DIESEL SERVICE WATER
HATCH 2 - CLASS 3
LOCATION: RIVER INTAKE STRUCT.

REV.	DATE	BY	CHK'D	APPR. 1
2	11-30-90	WGS	WS	WHC
1	5-7-87	DST	CSO	[illegible]
3	9-21-04	SM	MB	DDS

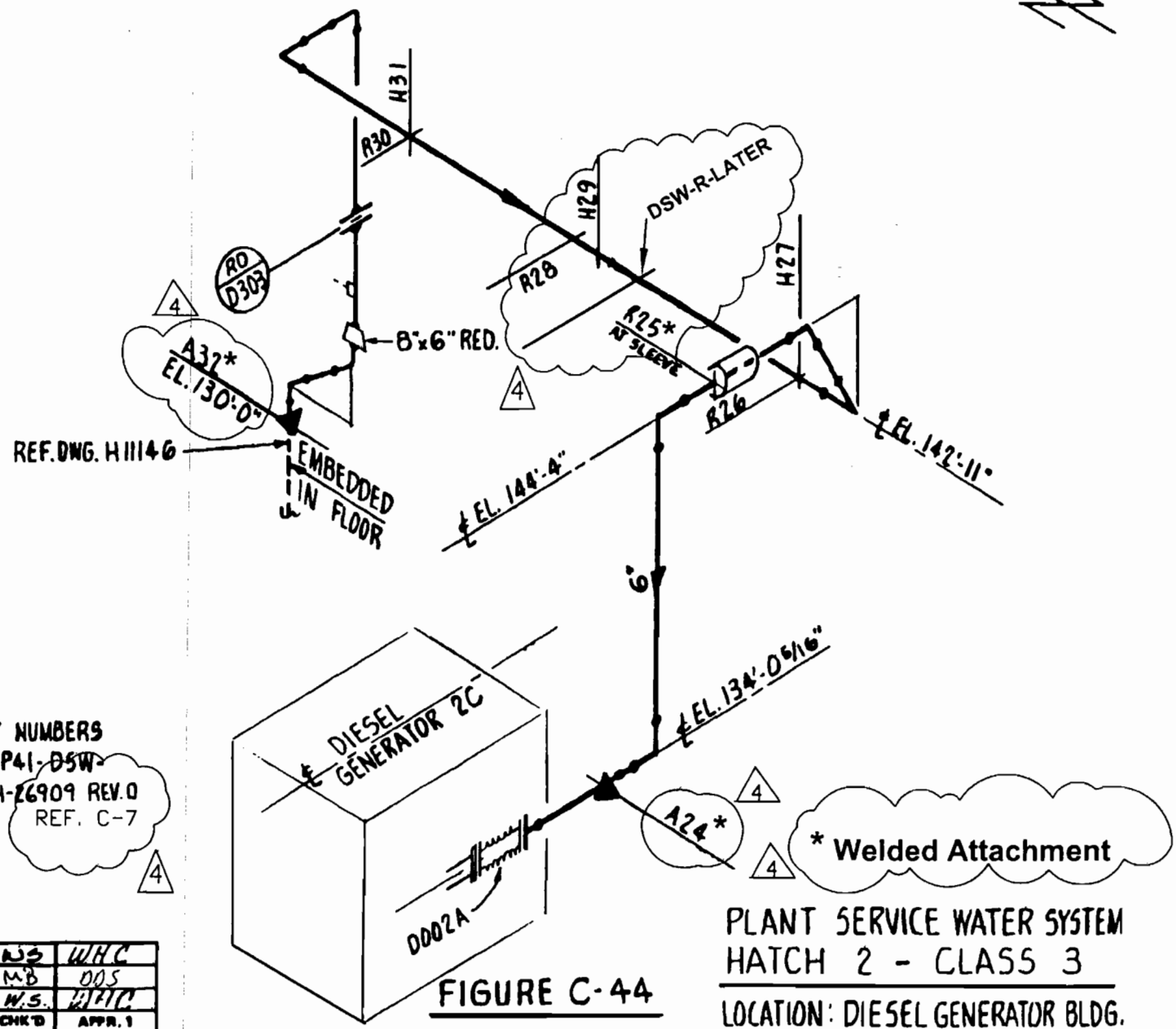

NOTES:
1. PIPING SUPPORT NUMBERS PRECEDED BY 2P41-~~DSW-~~
2. REF. ISOMETRIC H-26909 REV.0
REF. C-7

REV.	DATE	BY	CHK'D	APPR. 1
2	11-30-92	WGS	RJS	WHC
4	9-21-04	SM	MB	DOS
3	6-18-91	WGS	W.S.	WHC

FIGURE C-44

PLANT SERVICE WATER SYSTEM
HATCH 2 - CLASS 3

LOCATION: DIESEL GENERATOR BLDG.

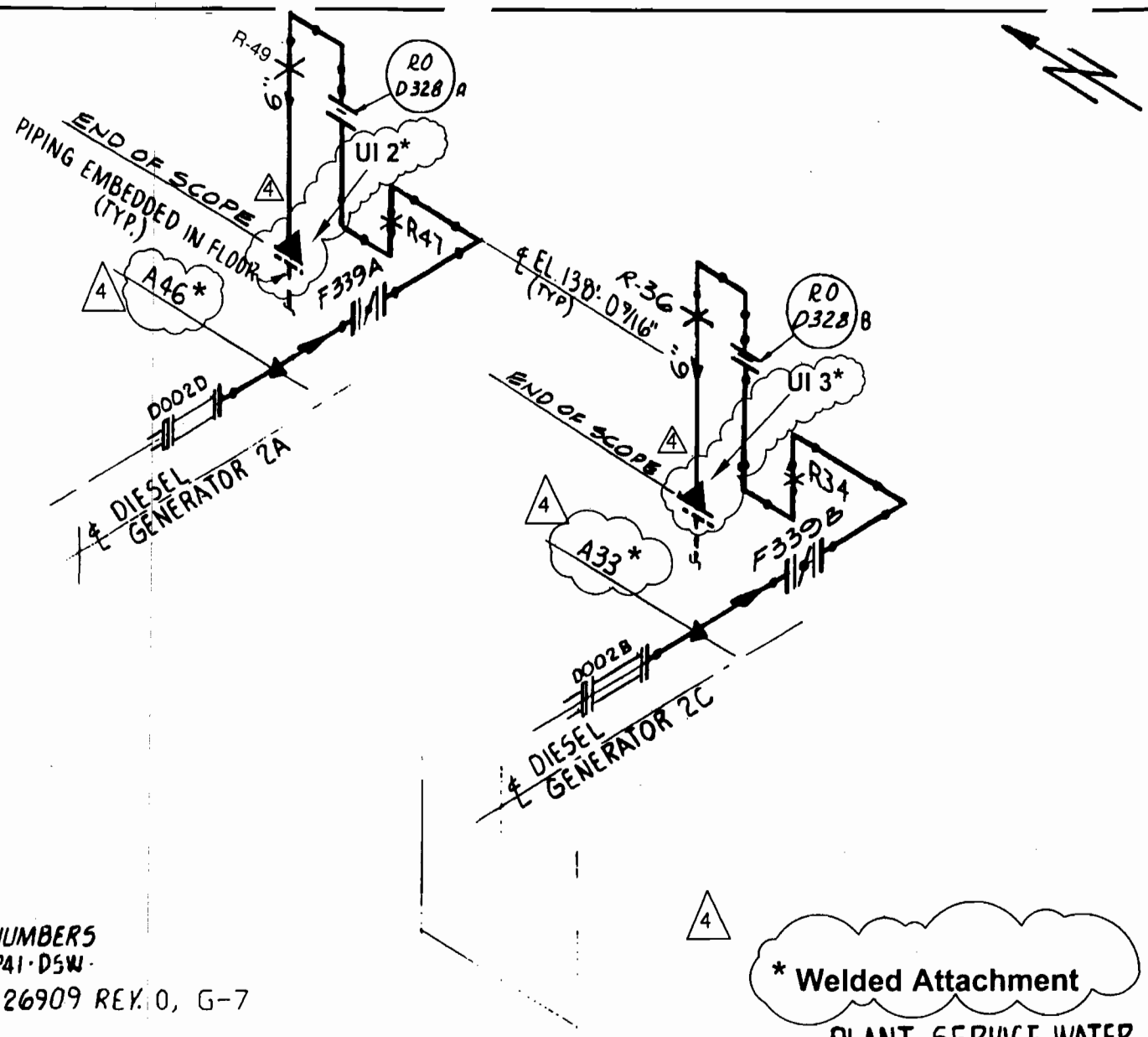

NOTES:

1.) PIPING SUPPORT NUMBERS PRECEDED BY 2P41-DSW-

2.) REF. ISOMETRIC H-26909 REV. 0, G-7

REV	DATE	BY	CHK'D	APPR'D
2	11-30-90	WGS	WS	WHC
4	9-21-04	SM	MB	DDS
3	6/25/96	WS	[illegible]	WHC

FIGURE C-45

PLANT SERVICE WATER
HATCH 2 - CLASS 3
LOCATION: DIESEL GEN. BLDG.

NOTES

1.) PIPE SUPPORT NUMBERS PRECEDED BY 2P41-D5W-.
2.) REF. ISOMETRIC H-26909 REV. 0
REF F-1

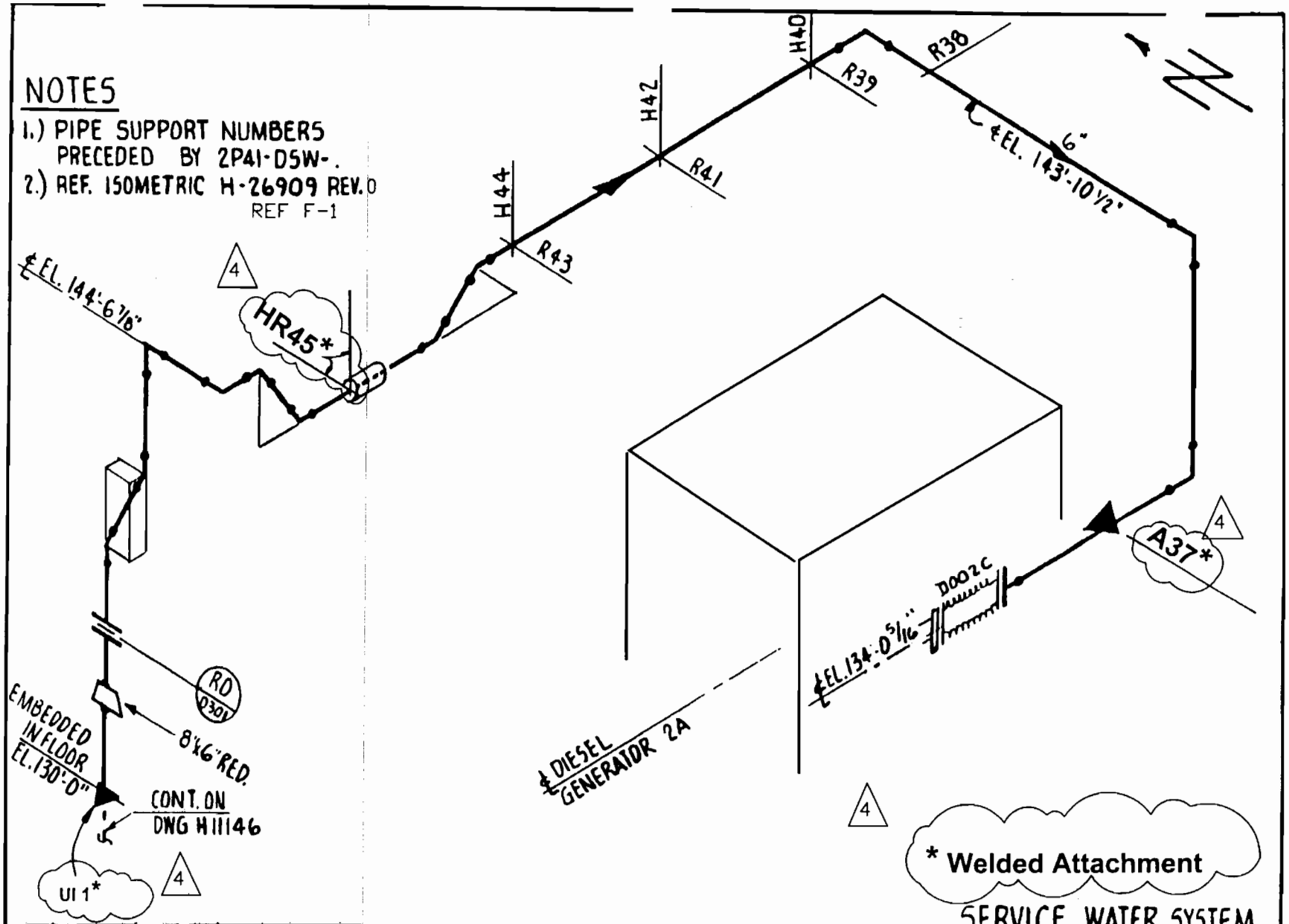

REV.	DATE	BY	CHK'D	APPR. 1
3	6-30-99	RPW	BKJ	DRG
2	11-30-90	WGS	WS	WHC
1	5-7-87	BST	CSG	CWD
4	10-13-04	TAS	MB	ODS

FIGURE C-46

SERVICE WATER SYSTEM
HATCH 2 CLASS 3
LOCATION: DIESEL GEN. BLDG.

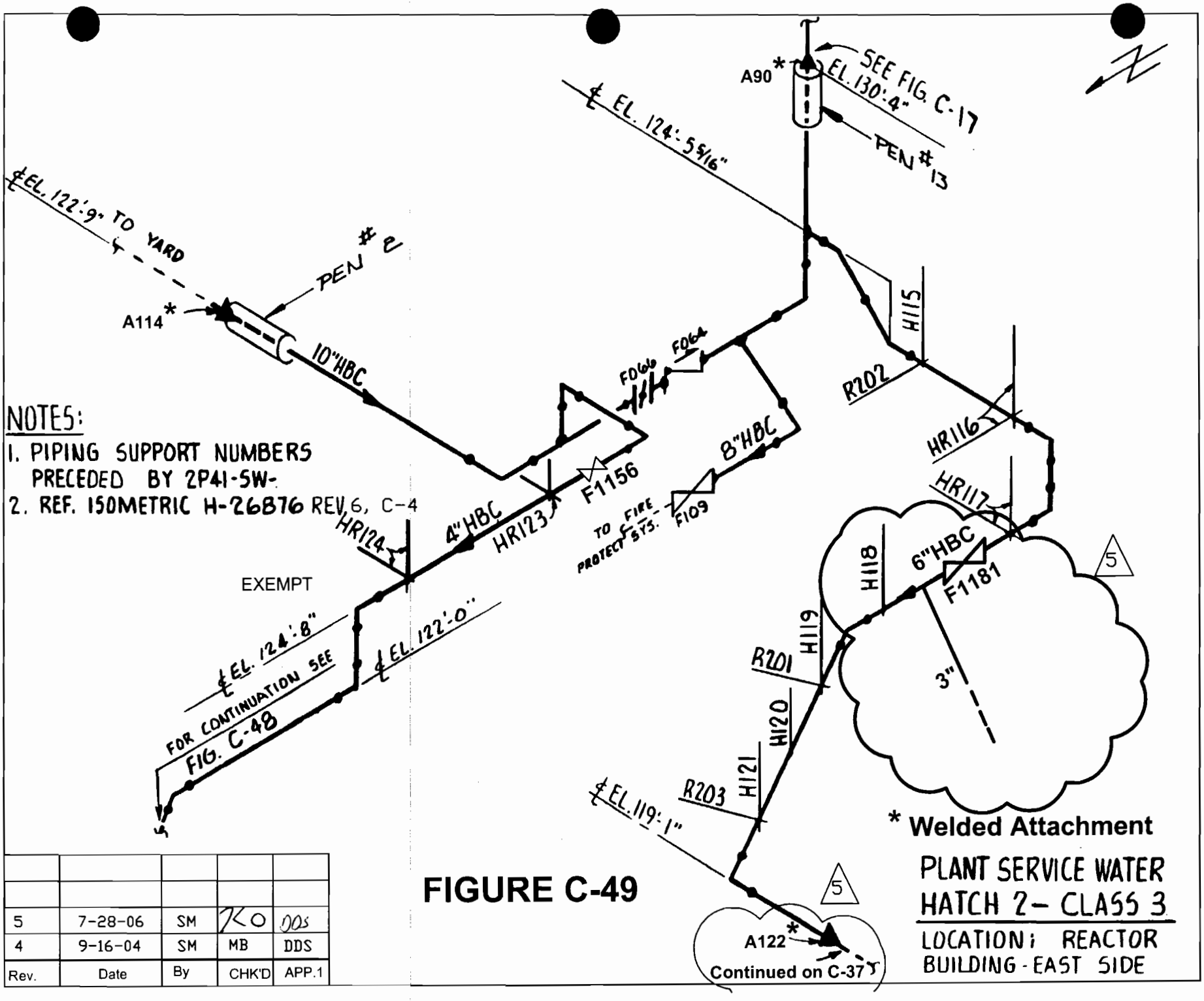

NOTES:

1. PIPING SUPPORT NUMBERS PRECEDED BY 2P41-SW-
2. REF. ISOMETRIC H-26876 REV. 6, C-4

Rev.	Date	By	CHK'D	APP.1
5	7-28-06	SM	KO	DDS
4	9-16-04	SM	MB	DDS

FIGURE C-49

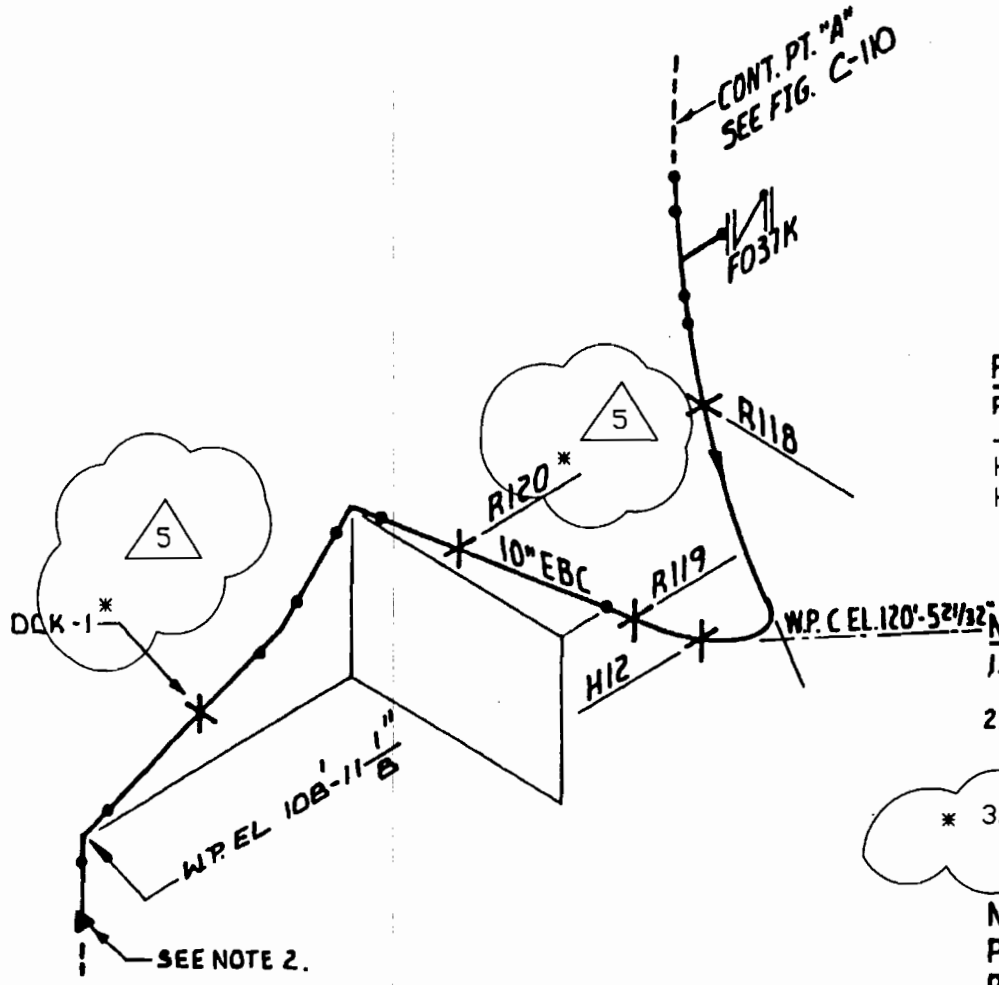

REFERENCE DRAWING:

PRIMARY STEAM RELIEF VALVE PIPING SHT.1 OF 4.

H-26324 REV.11 REF E-7
H-26804 REV.3 REF F-3

NOTES:

1. PIPE SUPPORT NUMBERS PRECEDED BY 2B21-MSRV.
2. ANCHOR NON-SEC. XI, PART OF MC BOUNDARY.

* 3. WELDED ATTACHMENTS

5

MAIN STEAM SYSTEM
PRIMARY STEAM RELIEF VALVE F013K
PIPING - DISCHARGE SIDE

North Side of Drywell

REV	DATE	BY	CHK'D	APPR.1
5	10-13-04	RAM	MB	005
4	1-5-01	RPW	BKJ	DRG
3	7-1-99	RPW	BKJ	DRG

FIGURE C-109

HATCH 2 CLASS 3

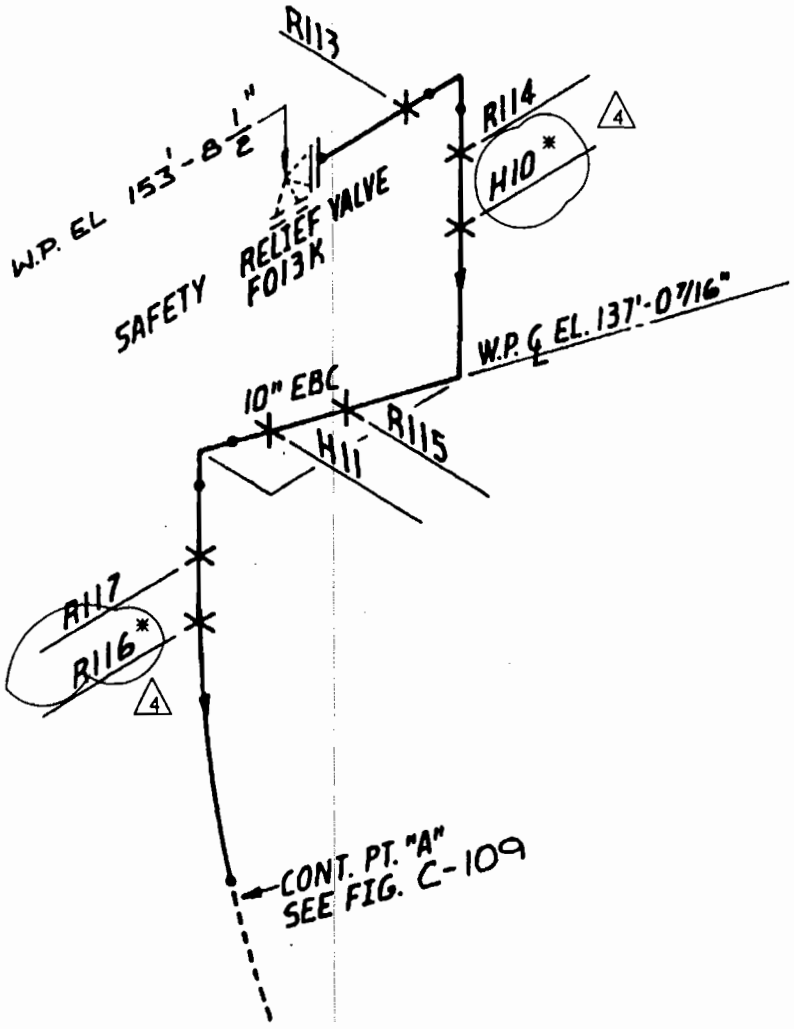

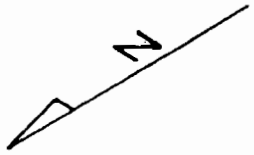

REFERENCE DRAWING:

PRIMARY STEAM RELIEF VALVE PIPING SHT. 1 OF 4 H-26804 REV. 3 REF B-4

H-26324 REV.11 REF E-7

NOTES:

1. PIPE SUPPORT NUMBERS PRECEDED BY 2B21-MSRV.

* WELDED ATTACHMENTS

4

MAIN STEAM SYSTEM
PRIMARY STEAM RELIEF VALVE F013K
PIPING - DISCHARGE SIDE

North Side of Drywell

HATCH 2 CLASS 3

FIGURE C-110

REV.	DATE	BY	CHK'D	APPR.
4	10-13-04	RAM	MB	DDS

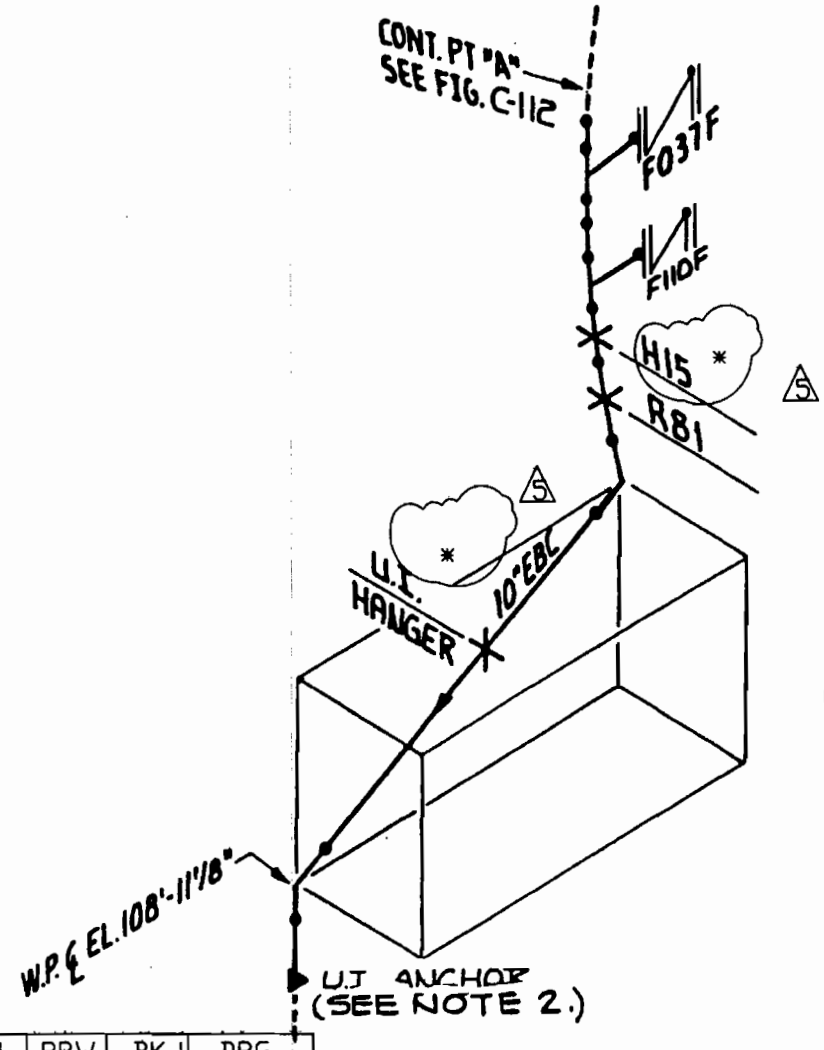

N

REFERENCE DRAWING:

PRIMARY STEAM RELIEF VALVE PIPING SHT. 1 OF 4 - H-26804, REV. 3, F-7

H26324 REV. 11 REF E-8

5

NOTES:

1. PIPE SUPPORT NUMBERS PRECEDED BY 2B21-MSRV.
2. ANCHOR NON-SECTION XI. PART OF MC BOUNDARY.

* 3. WELDED ATTACHMENTS

5

REV.	DATE	BY	CHK'D	APPR. 1
4	1-5-01	RPW	BKJ	DRG
3	7-1-99	RPW	BKJ	DRG
2	6-10-91	WGS	WS	WHC
1	11-30-90	WGS	WS	WHC
5	9-17-04	SM	MB	DOS

FIGURE C-111

MAIN STEAM SYSTEM
PRIMARY STEAM RELIEF VALVE F013F
PIPING - DISCHARGE SIDE

HATCH 2 CLASS 3

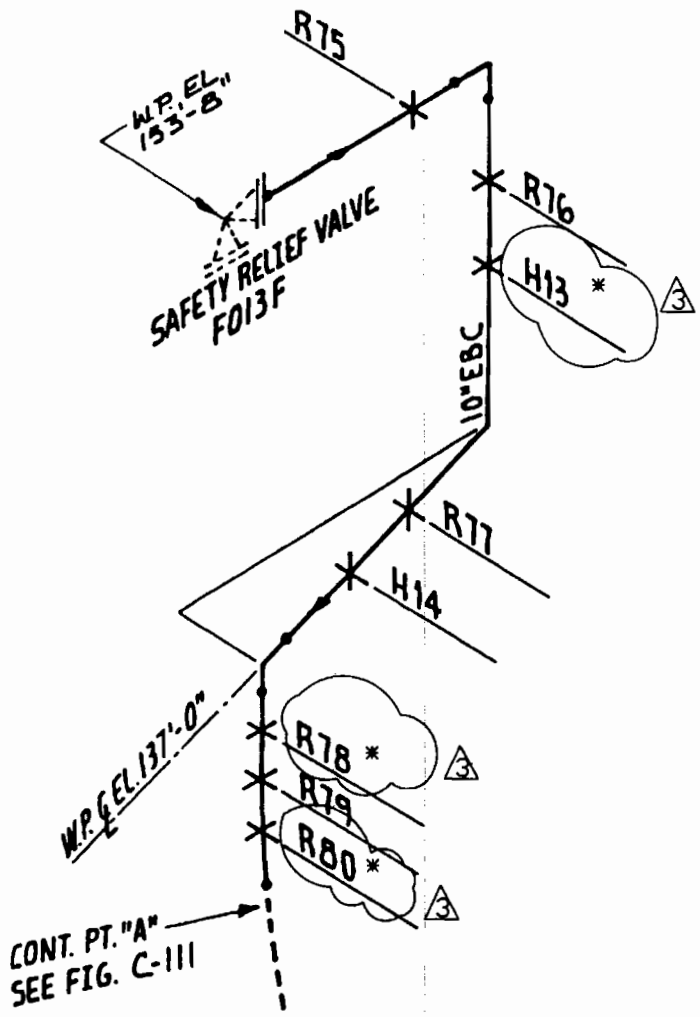

REFERENCE DRAWING:

PRIMARY STEAM RELIEF VALVE PIPING SHT. 1 OF 4... H-26804
REV. 3
REF A-8

NOTES:

1. PIPE SUPPORT NUMBERS PRECEDED BY 2B21-MSRV.

* 2. WELDED ATTACHMENTS 3

REV.	DATE	BY	CHK'D	APPR.1
3	10-13-04	RAM	MB	.005

FIGURE C-112

MAIN STEAM SYSTEM
PRIMARY STEAM RELIEF VALVE F013F
PIPING - DISCHARGE SIDE
HATCH 2 CLASS 3

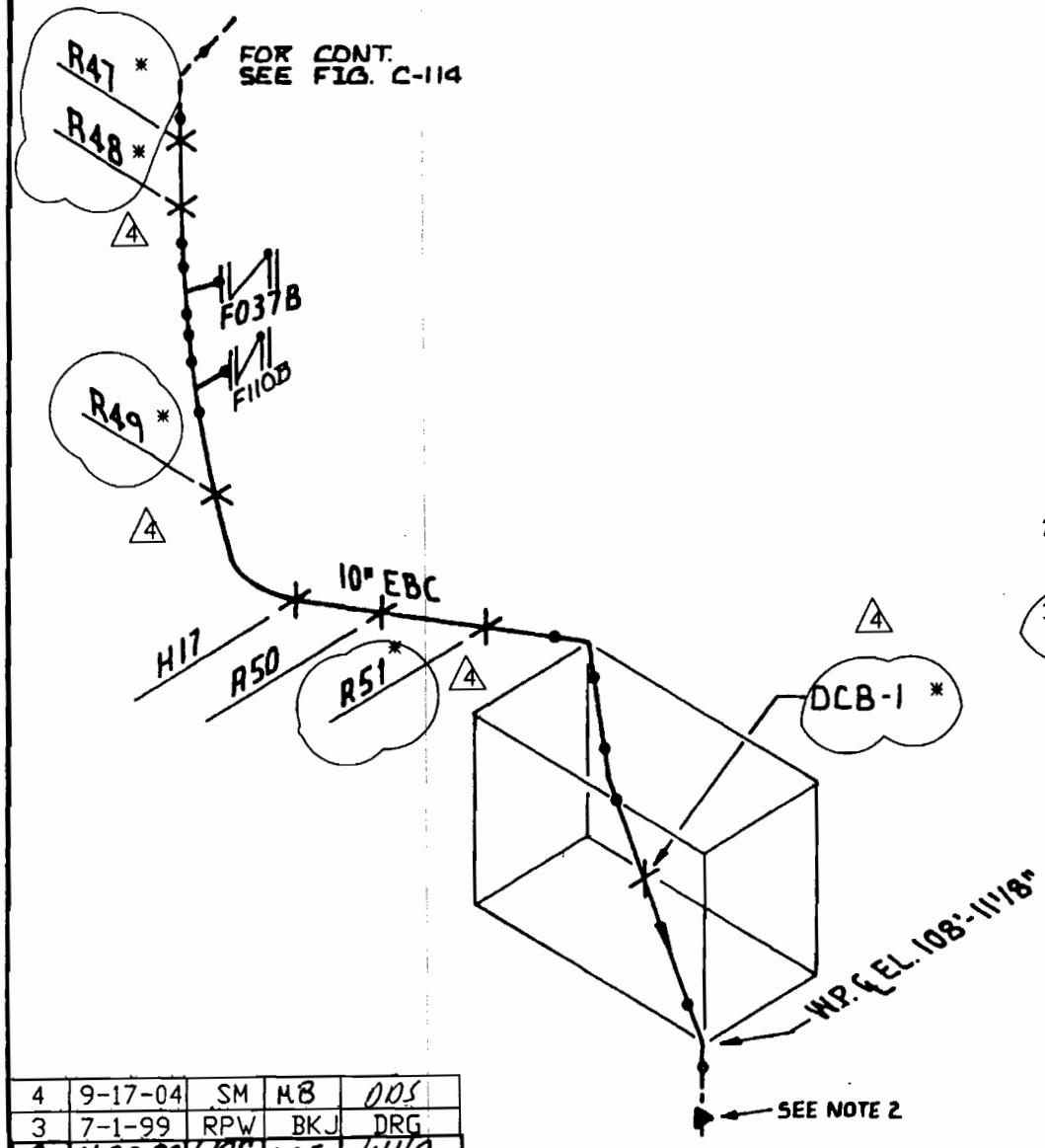

N

REFERENCE DRAWING:

PRIMARY STEAM RELIEF VALVE PIPING SHT. 1 OF 4 - H-26804 REV. 3

REF E-9

NOTES:

1. PIPE SUPPORT NUMBER PRECEDED BY ZB21-MSRV.
2. ANCHOR NON-SEC. XI, PART OF MC BOUNDARY.
3. WELDED ATTACHMENTS

REV.	DATE	BY	CHK'D	APPR.
4	9-17-04	SM	MB	DDS
3	7-1-99	RPW	BKJ	DRG
2	11-30-90	WGS	WS	WHC
1	7/27/90	WGS	WC	RLD
0	4-10-87	EJD	BKG	[illegible]

FIGURE C-113

MAIN STEAM SYSTEM
PRIMARY STEAM RELIEF VALVE F013B
PIPING - DISCHARGE SIDE
HATCH 2 CLASS 3

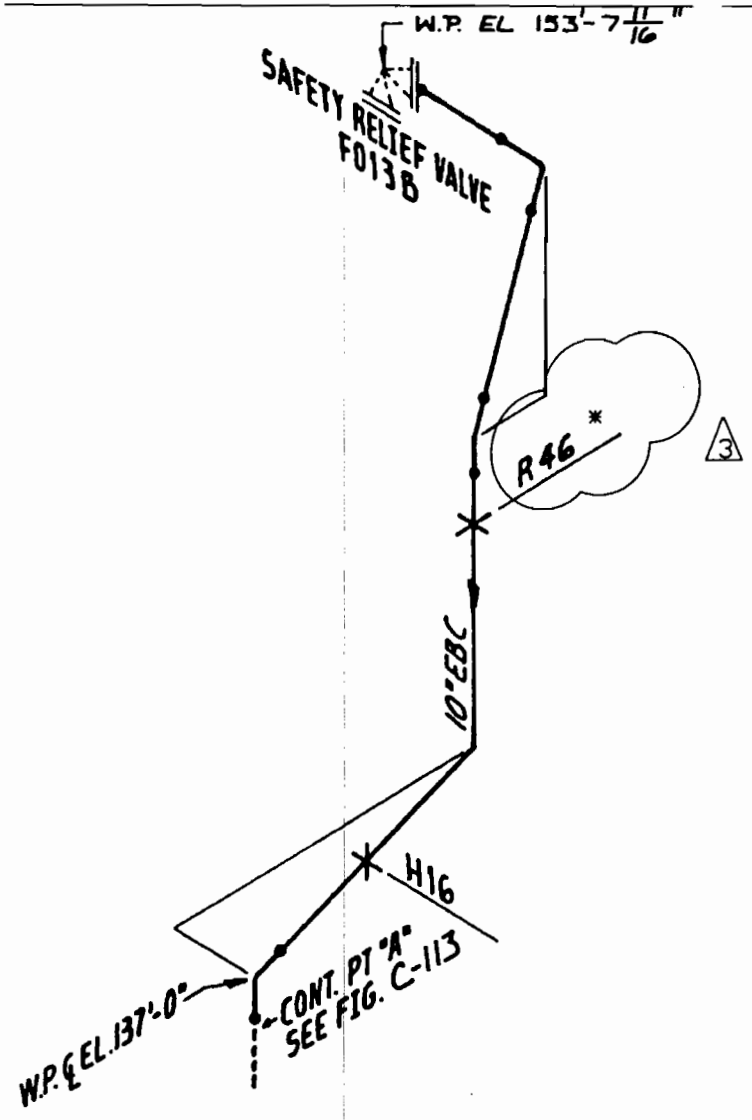

N

REFERENCE DRAWING:

PRIMARY STEAM RELIEF VALVE PIPING ~~SHT. 1 OF 4~~ H-26804 REV. 3, A-9

NOTES:

1. PIPE SUPPORT NUMBERS PRECEDED BY 2B21-MSRV

* 2. WELDED ATTACHMENTS

3

REV.	DATE	BY	CHK'D	APPR. 1
3	9-17-04	SM	MB	DDS
2	7-1-99	RPW	BKJ	DRG
1	11-30-90	WGS	WS	WHC
0	4-10-87	EJO	[illegible]	[illegible]

FIGURE C-114

MAIN STEAM SYSTEM
PRIMARY STEAM RELIEF VALVE F013B
PIPING - DISCHARGE SIDE

HATCH 2 CLASS 3

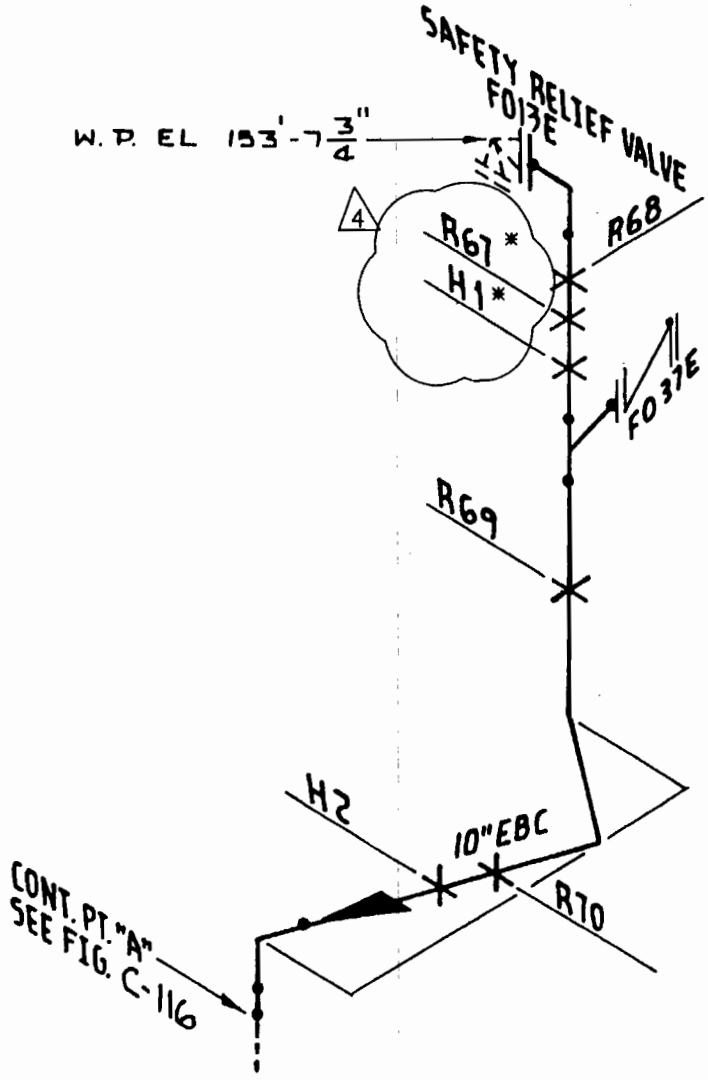

REFERENCE DRAWING:

PRIMARY STEAM RELIEF VALVE PIPING SHT. 2 OF 4 ---------- H-26805
REV. 5
REF B-3

NOTES:

1. PIPE SUPPORT NUMBERS PRECEDED BY 2B21-MSRV.

* 2. WELDED ATTACHMENTS

4

4	10-13-04	RAM	MB	OOS
REV.	DATE	BY	CHK'D	APPR.1

FIGURE C-115

MAIN STEAM SYSTEM
PRIMARY STEAM RELIEF VALVE F013E
PIPING - DISCHARGE SIDE
HATCH 2 CLASS 3

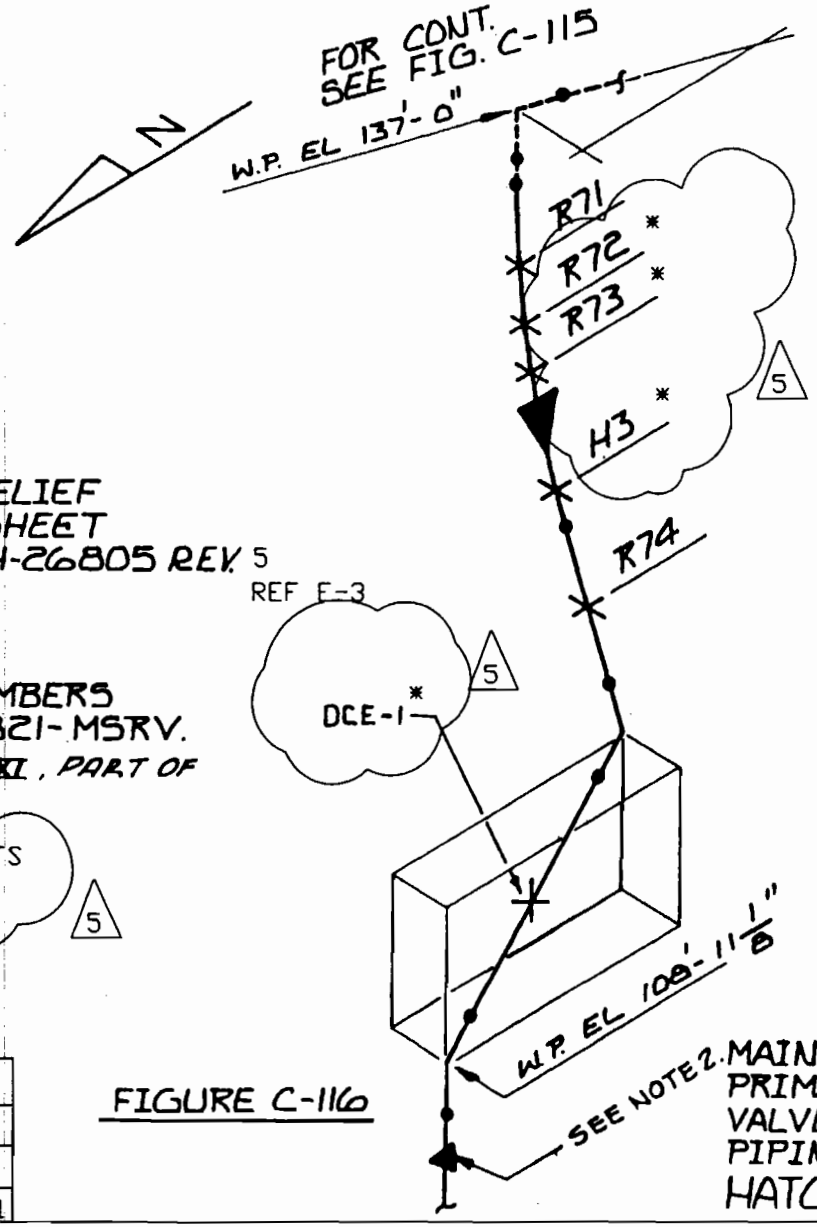

REFERENCES:

PRIMARY STEAM RELIEF VALVE PIPING_ SHEET 2 OF 4_____H-26805 REV. 5

NOTES:

1. PIPE SUPPORT NUMBERS PRECEDED BY 2B21-MSRV.
2. ANCHOR NON-SEC. XI, PART OF MC BOUNDARY.

* 3. WELDED ATTACHMENTS

5

FIGURE C-116

MAIN STEAM SYSTEM
PRIMARY STEAM RELIEF VALVE F013E
PIPING-DISCHARGE SIDE
HATCH 2 CLASS 3

REV.	DATE	BY	CHK'D	APPR.1
5	10-13-04	RAM	MB	005

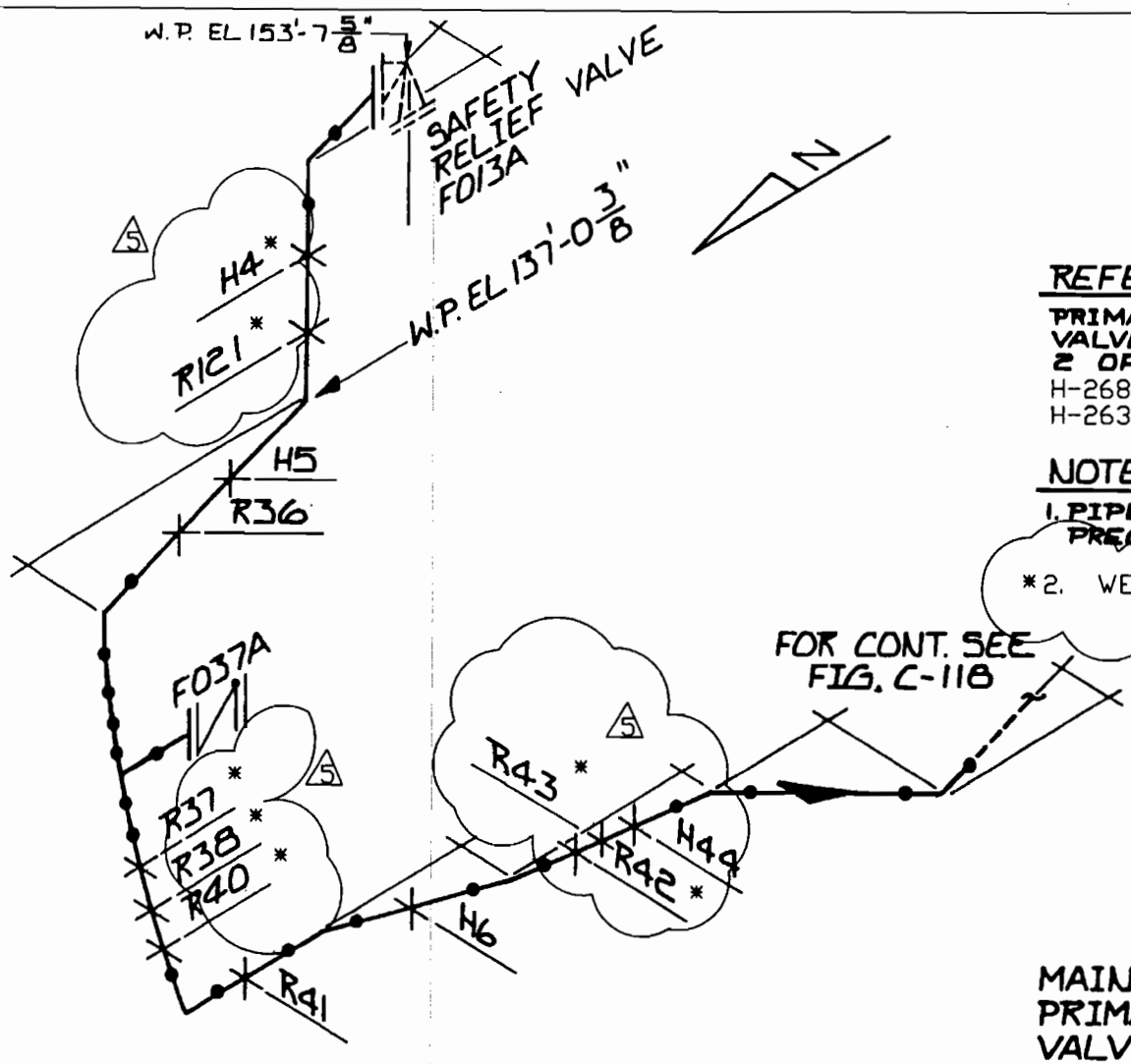

REFERENCES:

PRIMARY STEAM RELIEF VALVE PIPING - SHEET 2 OF 4

H-26805 REV.5 REF B-6
H-26324 REV. 11 REF F-8

NOTES:

1. PIPE SUPPORT NUMBERS PRECEDED BY 2B21-MSRV.
*2. WELDED ATTACHMENTS

MAIN STEAM SYSTEM
PRIMARY STEAM RELIEF VALVE F013A
PIPING - DISCHARGE SIDE

N.W.SIDE OF DRYWELL

HATCH 2 CLASS 3

REV.	DATE	BY	CHK'D	APPR.1
5	9-17-04	SMM	MB	005

FIGURE C-117

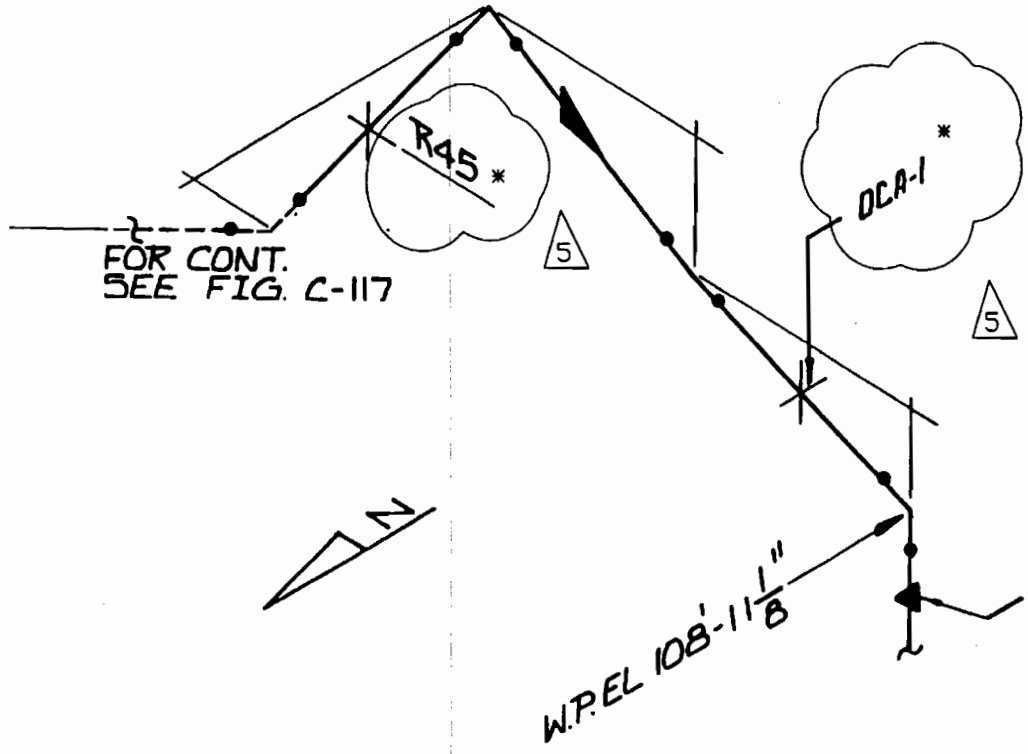

REFERENCES:

PRIMARY STEAM RELIEF VALVE PIPING - SHEET 2 OF 4 ---------- H-26805 REV. 5, REF. F-8

5

NOTES:

1. PIPE SUPPORT NUMBERS PRECEDED BY 2B21-MSRV.
2. ANCHOR NON-SEC. XI, PART OF MC BOUNDARY.

*3. WELDED ATTACHMENTS

5

MAIN STEAM SYSTEM
PRIMARY STEAM RELIEF
VALVE F013A
PIPING-DISCHARGE SIDE
HATCH 2 CLASS 3

REV.	DATE	BY	CHK'D	APPR.1
5	9-17-04	SMM	MB	005

FIGURE C-118

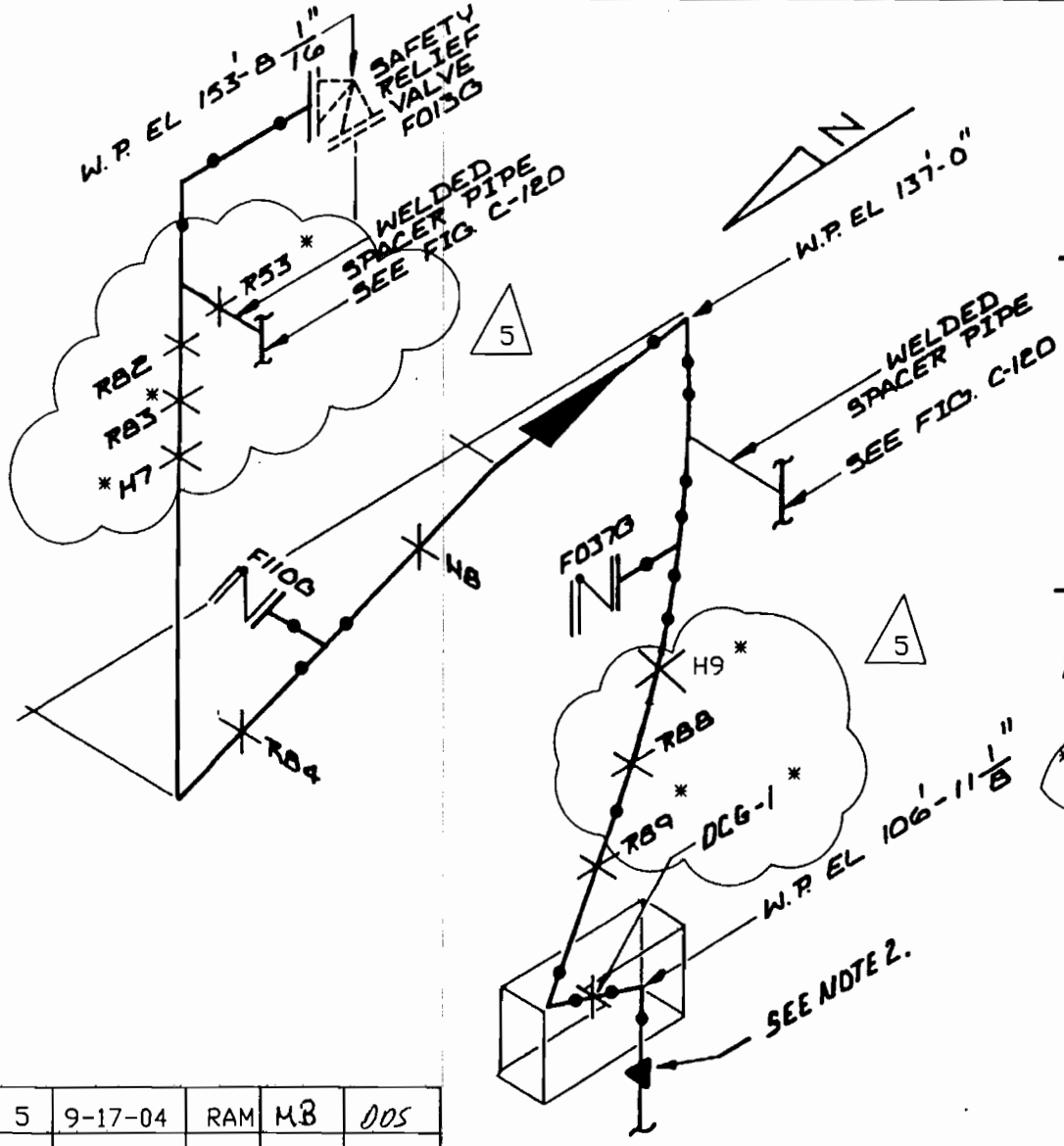

REFERENCES:

PRIMARY STEAM RELIEF VALVE PIPING – SHEET 2 OF 4 ..... H-26805 REV. 5
REF B-9

5

NOTES:

1. PIPE SUPPORT NUMBERS PRECEDED BY 2B21-MSRV.
2. ANCHOR NON-SEC. XI, PART OF MC BOUNDARY.

* 3. WELDED ATTACHMENTS

5

MAIN STEAM SYSTEM
PRIMARY STEAM RELIEF
VALVE F013G
PIPING – DISCHARGE SIDE
HATCH 2 CLASS 3

FIGURE C-119

REV.	DATE	BY	CHK'D	APPR.1
5	9-17-04	RAM	MB	DOS

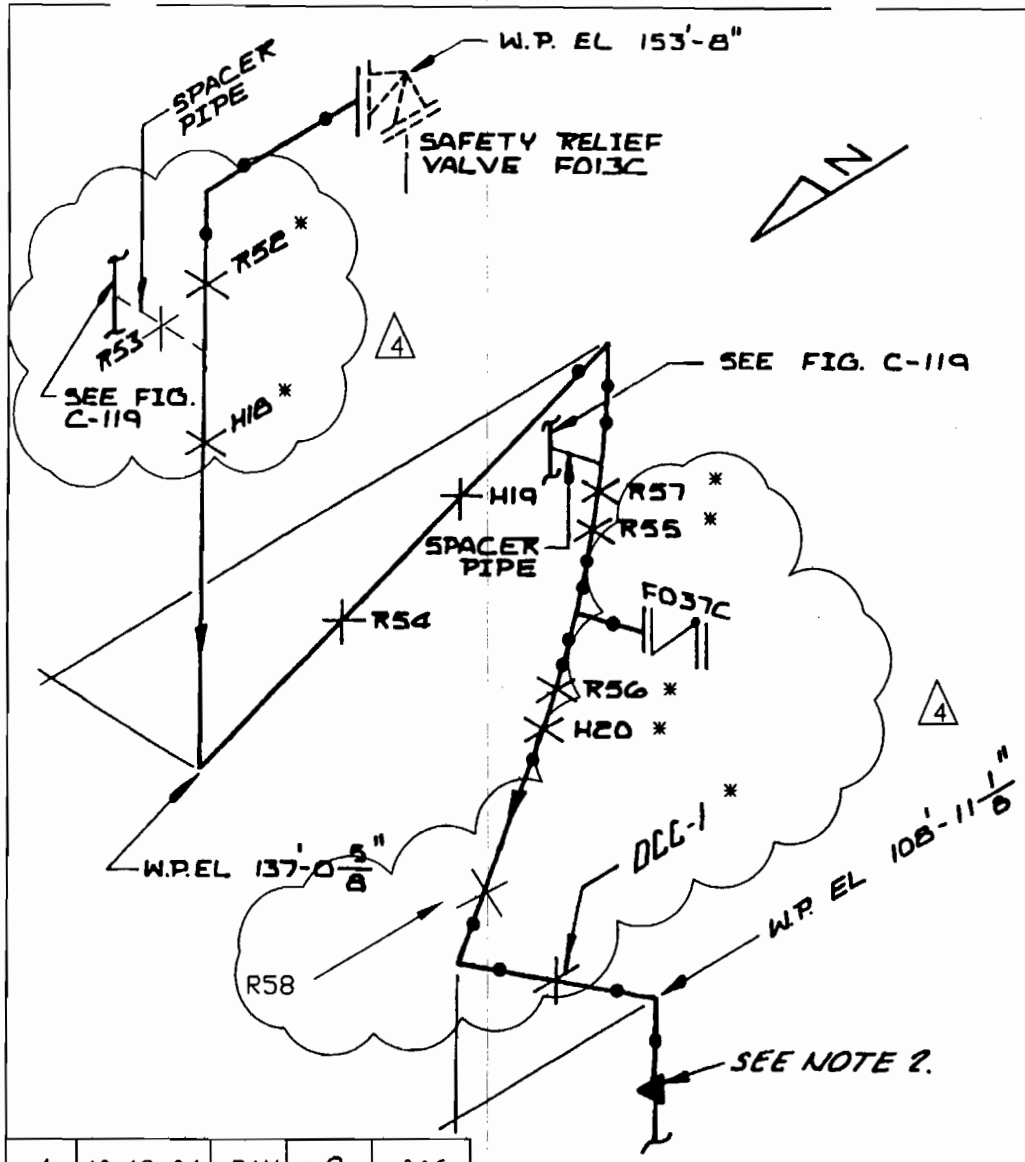

REFERENCES:

PRIMARY STEAM RELIEF VALVE PIPING – SHEET 3 OF 4 ---------- H-26806 REV. 3
REF B-3

NOTES:

1. PIPE SUPPORT NUMBERS PRECEDED BY 2B21-MSRV.
2. ANCHOR NON-SEC. XI, PART OF MC BOUNDARY.

* 3. WELDED ATTACHMENTS

4

MAIN STEAM SYSTEM
PRIMARY STEAM RELIEF
VALVE F013C
PIPING-DISCHARGE SIDE
HATCH 2 CLASS 3

FIGURE C-120

REV.	DATE	BY	CHK'D	APPR.1
4	10-13-04	RAM	MB	DDS

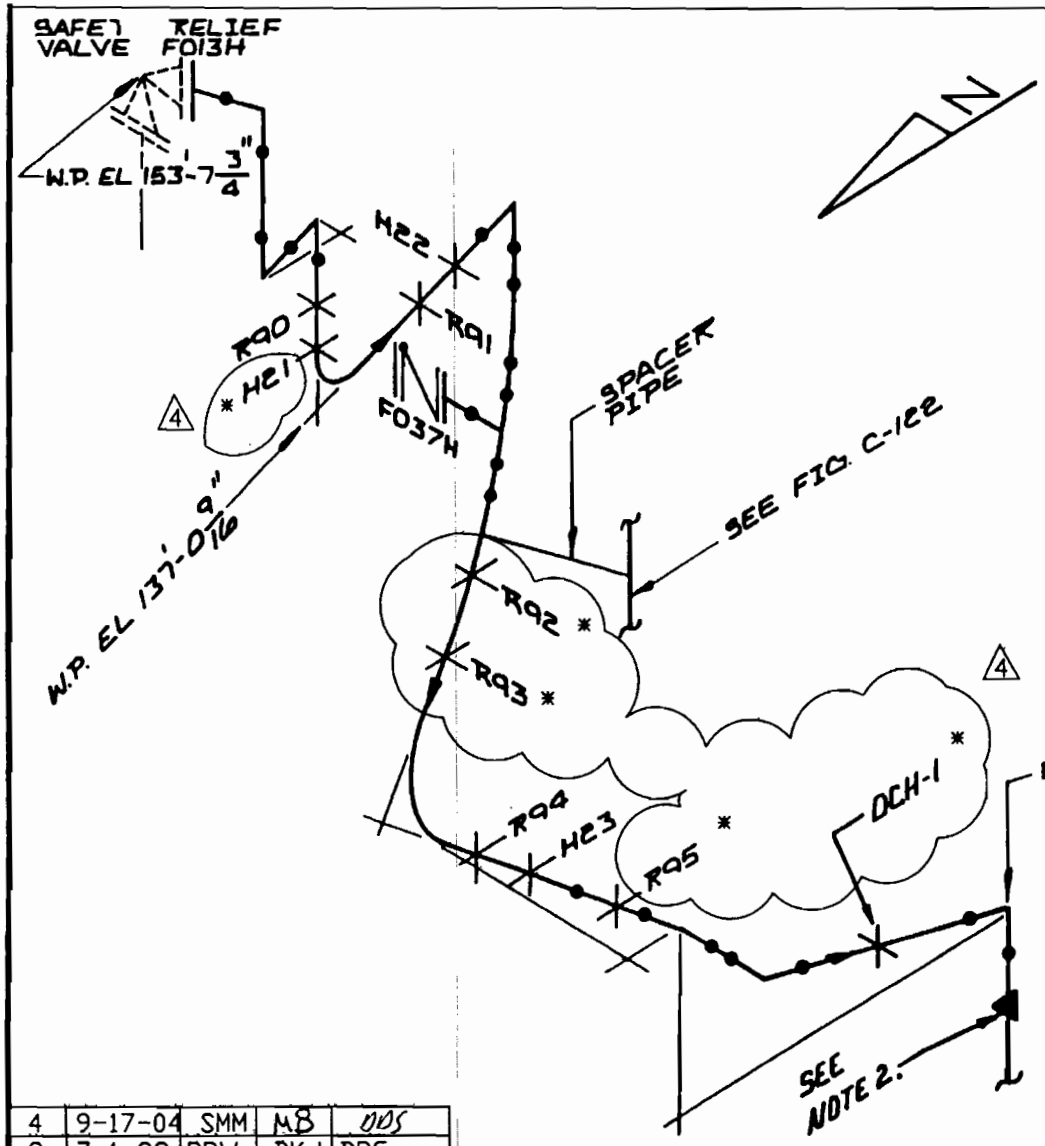

REFERENCES:

PRIMARY STEAM RELIEF VALVE PIPING — SHEET 3 OF 4 ---------- H-26806 REV. 3 REF B-5 (4)

NOTES:

1. PIPE SUPPORT NUMBERS PRECEDED BY 2B21-MSRV.
2. ANCHOR NON-SEC XI, PART OF MC BOUNDARY.
3. WELDED ATTACHMENTS (4)

MAIN STEAM SYSTEM
PRIMARY STEAM RELIEF
VALVE F013H
PIPING-DISCHARGE SIDE
HATCH 2 CLASS 3

REV	DATE	BY	CHK'D	APPR. 1
4	9-17-04	SMM	MB	DDS
3	7-1-99	RPW	BKJ	DRG
2	11-30-90	WGS	WS	WHC
1	7/27/90	WGS	WC	MLB
0	4/28/87	BJT	BKG	C

FIGURE C-121

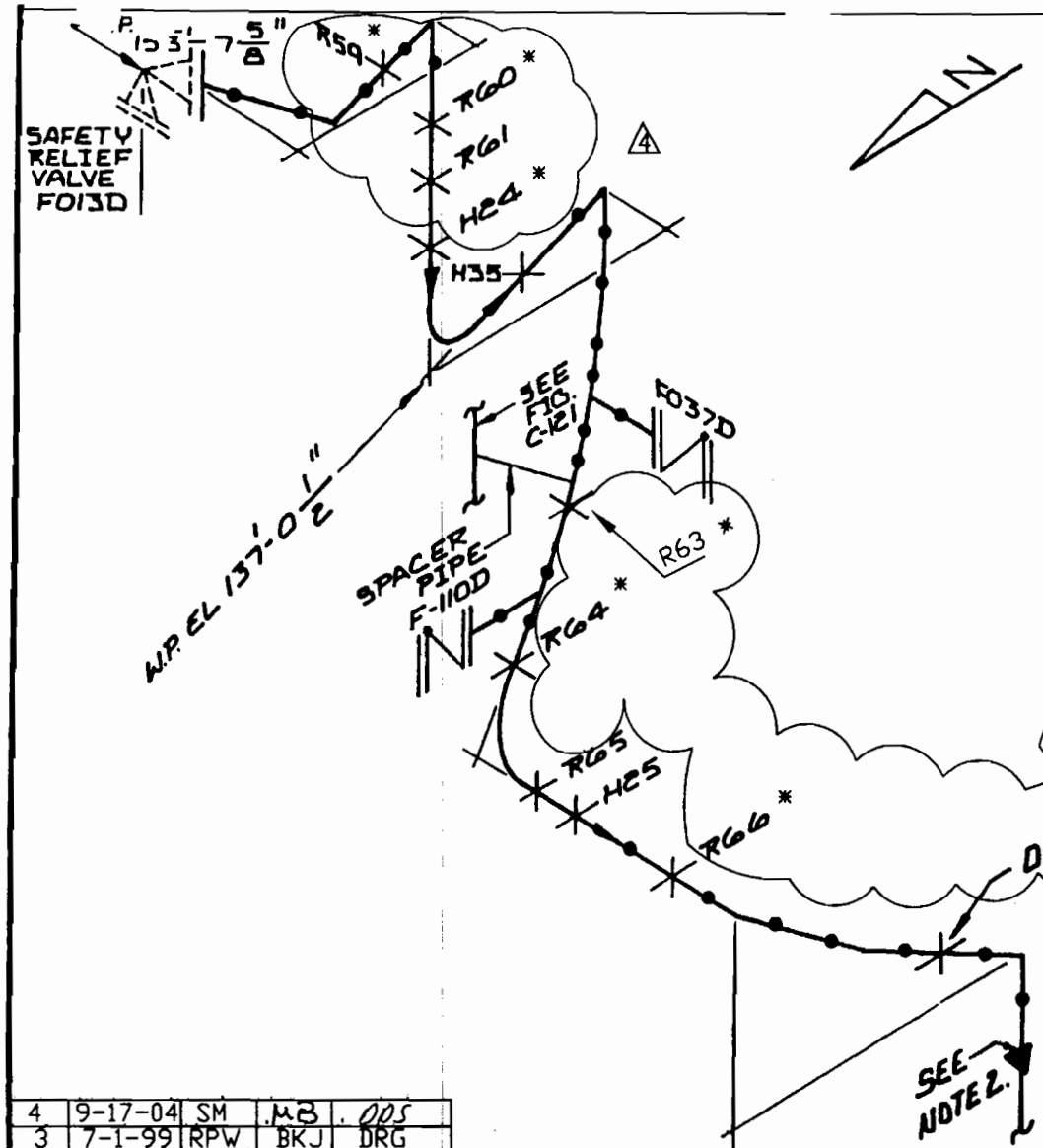

REFERENCES:

PRIMARY STEAM RELIEF VALVE PIPING — SHEET 3 OF 4 _____ ~~H-86806~~ REV. 3

REF B-7

NOTES:

1. PIPE SUPPORT NUMBERS PRECEDED BY 2B21-MSRV.
2. ANCHOR NON-SEC. XI, PART OF MC BOUNDARY.
3. * WELDED ATTACHMENTS

MAIN STEAM SYSTEM
PRIMARY STEAM RELIEF
VALVE F013D.
PIPING-DISCHARGE SIDE
HATCH 2 CLASS 3

FIGURE C-122

REV.	DATE	BY	CHK'D	APPR 1
4	9-17-04	SM	MB	DDS
3	7-1-99	RPW	BKJ	DRG
2	11-30-90	WGS	WS	WHC
1	7/27/90	WGS	JDC	[illegible]
0	4/28/87	DST	F.P.G	CWD

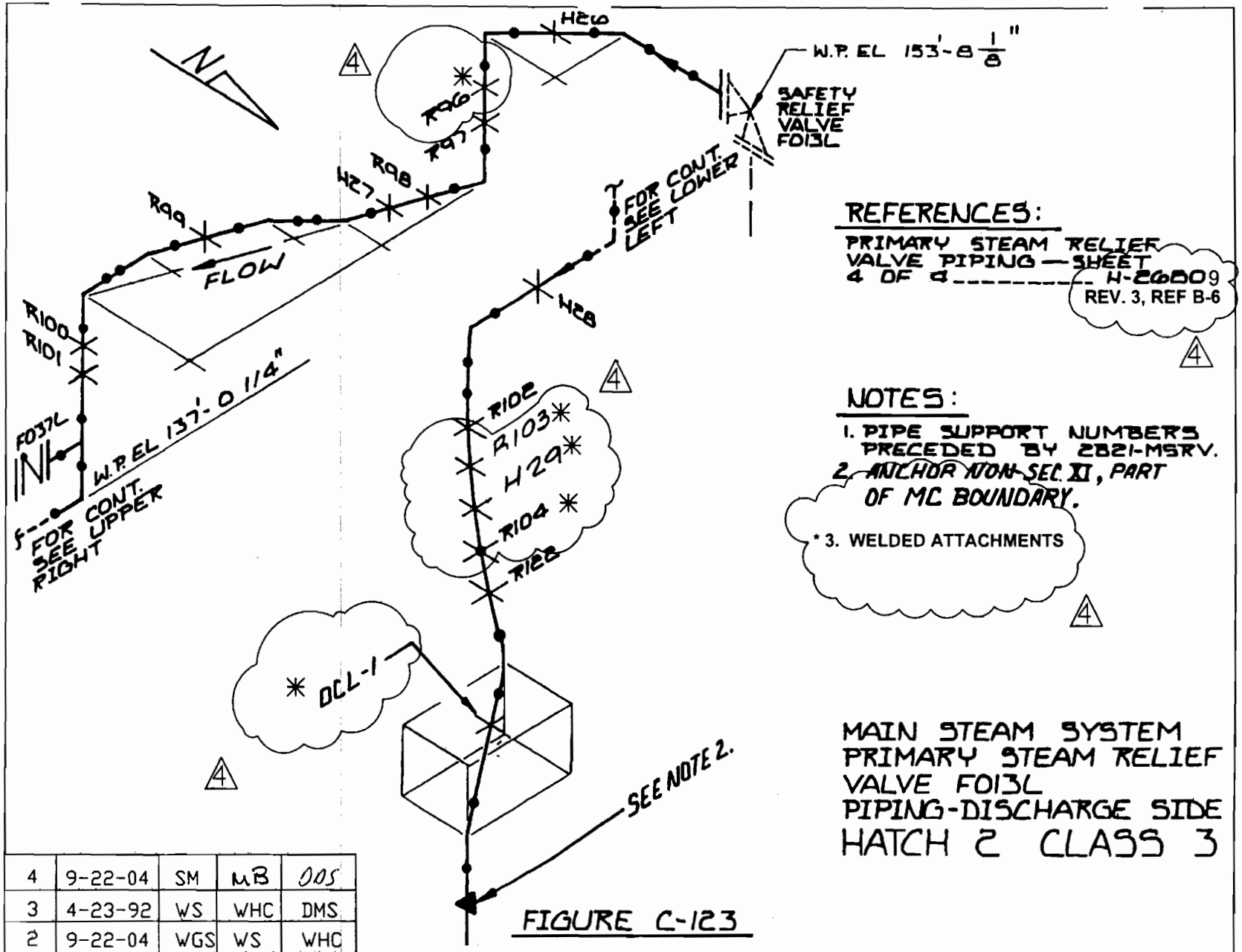

REV.	DATE	BY	CHK'D	APPR.1
4	9-22-04	SM	MB	DDS
3	4-23-92	WS	WHC	DMS
2	9-22-04	WGS	WS	WHC

FIGURE C-123

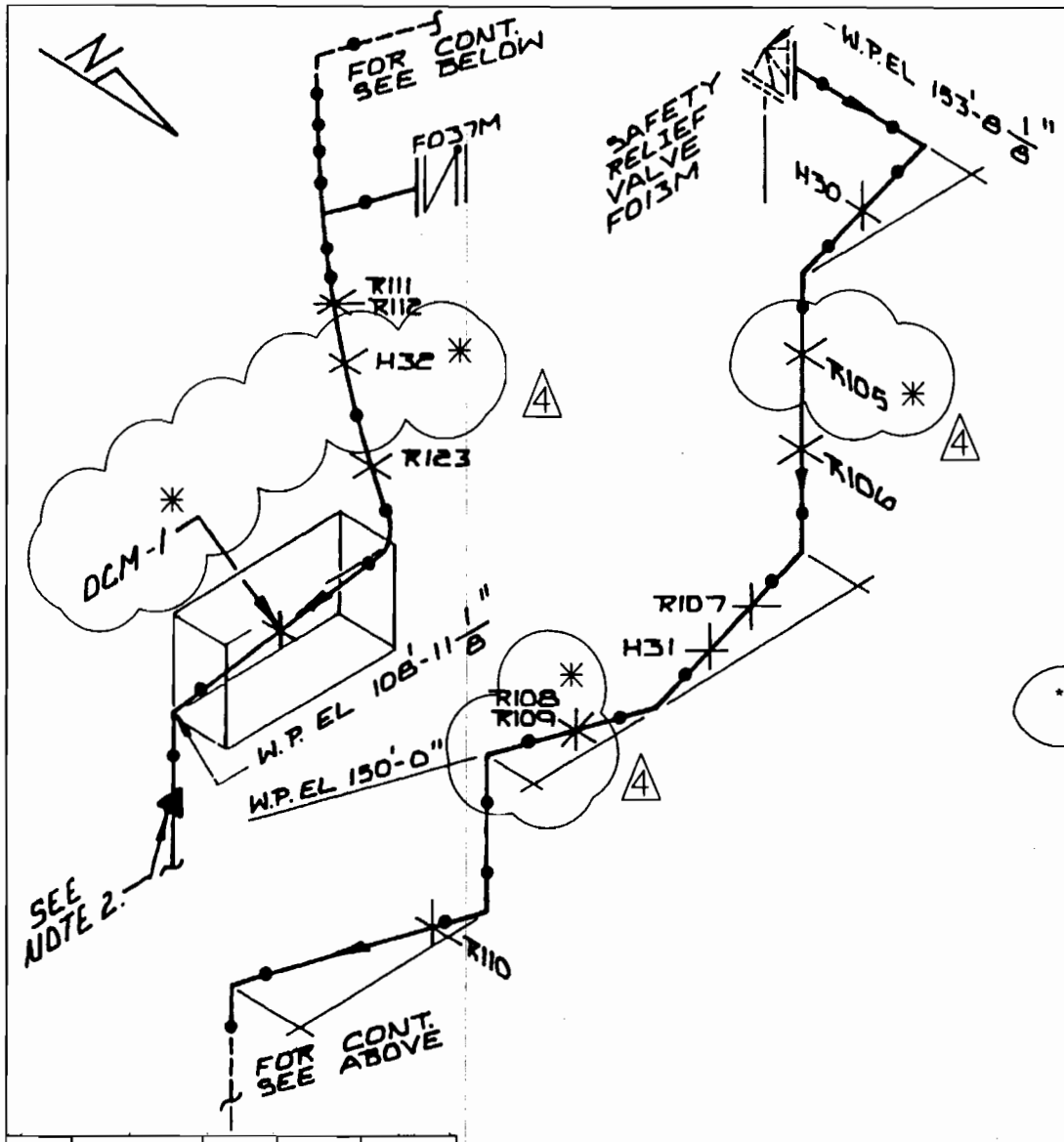

REFERENCES:

PRIMARY STEAM RELIEF VALVE PIPING —— SHEET 4 OF 4 --------- H-26809 REV. 3 REF. B-7

NOTES:

1. PIPE SUPPORT NUMBERS PRECEDED BY 2B21-MSRV.
2. ANCHOR NON-SEC. XI, PART OF MC BOUNDARY.
3. * WELDED ATTACHMENTS

MAIN STEAM SYSTEM
PRIMARY STEAM RELIEF VALVE F013M
PIPING-DISCHARGE SIDE
HATCH 2 CLASS 3

FIGURE C-124

REV.	DATE	BY	CHK'D	APPR.1
4	9-22-04	SM	MB	DDS

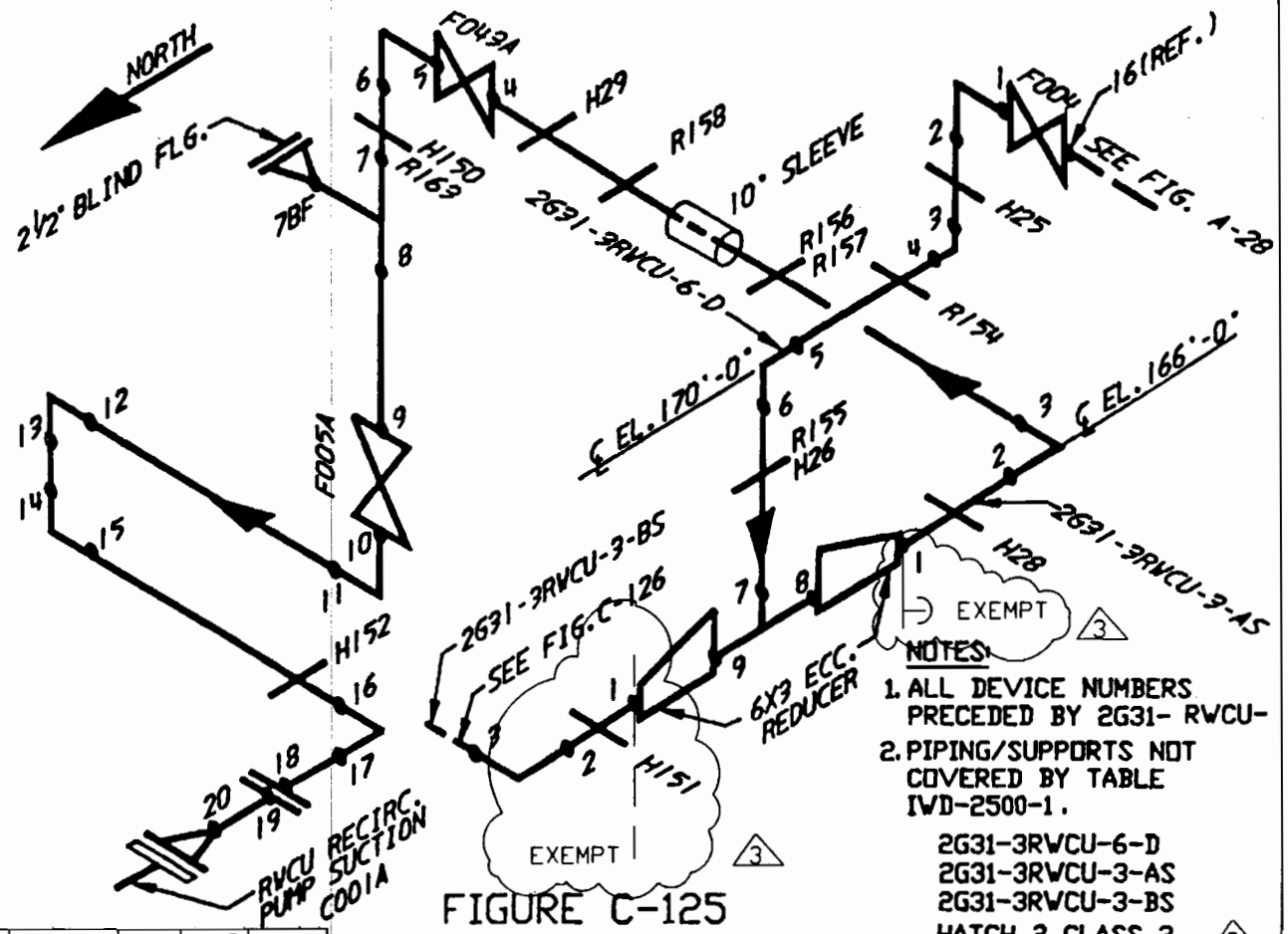

FIGURE C-125

NOTES:

1. ALL DEVICE NUMBERS PRECEDED BY 2G31- RWCU-
2. PIPING/SUPPORTS NOT COVERED BY TABLE IWD-2500-1.

2G31-3RWCU-6-D
2G31-3RWCU-3-AS
2G31-3RWCU-3-BS
HATCH 2 CLASS 3

REFERENCE ISO. H-26854 REV.6
REF D-3

REV.	DATE	BY	CHK'D	APPR.1
3	9-17-04	SM	MB	005
2	7-1-99	RPW	BKJ	DRG

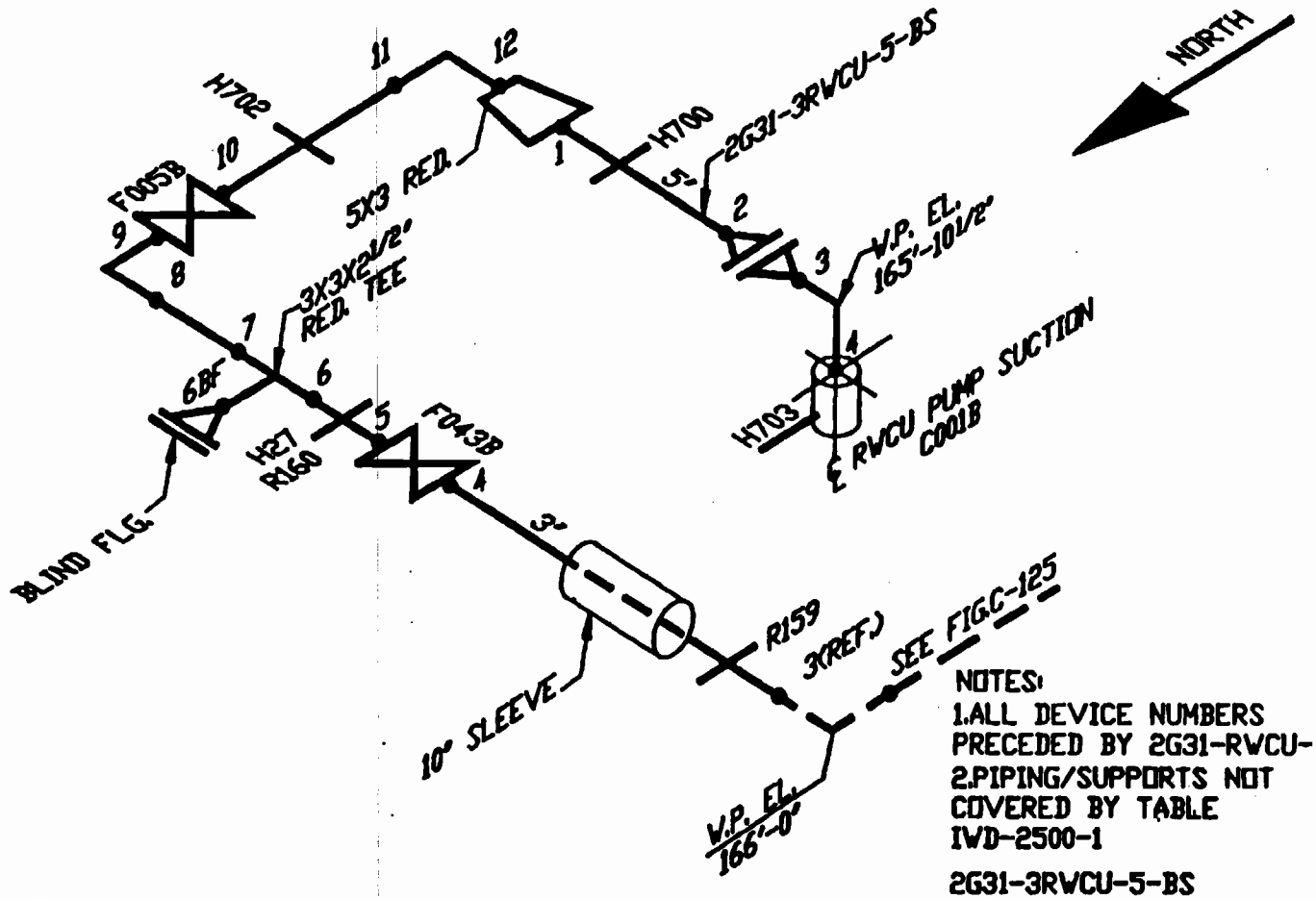

NOTES:
1.ALL DEVICE NUMBERS PRECEDED BY 2G31-RWCU-
2.PIPING/SUPPORTS NOT COVERED BY TABLE IWD-2500-1

2G31-3RWCU-5-BS
2G31-3RWCU-3-BS
HATCH 2 CLASS 3

2

REFERENCE ISO. H-26854 REV.6
REF C-11

FIGURE C-126

REV.	DATE	BY	CK'D.	APPR.
2	7-1-99	RPW	[illegible]	DRG
1	11-30-90	[illegible]	[illegible]	WHC