GE Energy

James C. Kinsey
Project Manager, ESBWR Licensing

PO Box 780 M/C J-70
Wilmington, NC 28402-0780
USA

T 910 675 5057
F 910 362 5057
jim.kinsey@ge.com

Security Notice
This letter forwards Security-Related information in accordance with 10CFR2.390. Upon removal of Enclosure 1, the balance of this letter may be considered non-Security-Related.

MFN 06-528

Docket No. 52-010

December 22, 2006

U.S. Nuclear Regulatory Commission
Document Control Desk
Washington, D.C. 20555-0001

Subject: **Response to Portion of NRC Request for Additional Information Letter No. 60 – Radiation Protection – RAI Numbers 12.2-19, 12.3-10, 12.3-12, 12.4-5, and 12.4-7**

Enclosure 1 contains Security-Related information identified by the designation "{{{Security-Related Information - Withhold Under 10 CFR 2.390}}}." GE hereby requests this information be withheld from public disclosure in accordance with the provisions of 10 CFR 2.390. A public version is contained in Enclosure 2

If you have any questions or require additional information regarding the information provided here, please contact me.

Sincerely,

Kathy Sedney for

James C. Kinsey
Project Manager, ESBWR Licensing

D068

Reference:

1. MFN 06-342, Letter from U.S. Nuclear Regulatory Commission to David Hinds, *Request for Additional Information Letter No. 60 Related to the ESBWR Design Certification Application*, September 18, 2006

Enclosures:

1. MFN 06-528 – Response to Portion of NRC Request for Additional Information Letter No. 60 – Radiation Protection – RAI Numbers 12.2-19, 12.3-10, 12.3-12, 12.4-5, and 12.4-7 – Security-Related Information
2. MFN 06-528 – Response to Portion of NRC Request for Additional Information Letter No. 60 – Radiation Protection – RAI Numbers 12.2-19, 12.3-10, 12.3-12, 12.4-5, and 12.4-7 – Public Version

cc: AE Cubbage USNRC (with enclosures)
GB Stramback GE/San Jose (with enclosures)
eDRF 0062-5833

Enclosure 2

MFN 06-528

Partial Response to RAI Letter No. 71 Related to ESBWR Design Certification Application

Radiation Protection

RAI Numbers 12.2-19, 12.3-10, 12.3-12, 12.4-5 and 12.4-7

Public Version

NRC RAI 12.2-19:

DCD Tier 2, Section 12.1.2.3.2, second bullet, appears to indicate that the shielding around the reactor vessel is sufficient to allow personnel access to the upper drywell during fuel handling operations.

Verify that the ESBWR design is intended to allow occupancy of the upper drywell during fuel movement/refueling.

Provide the dose rates in the upper drywell for the worst case normal fuel handling.

Include a description of radiation streaming through the shield penetration opening.

Provide the dose rates in the upper drywell for the worst case drop accident where the fuel rests against the reactor vessel, and where the fuel comes to rest on the vessel flange/refueling pool seal diaphragm.

Describe maintenance activities anticipated in the upper drywell (from elevation 9060mm and up) and personnel egress routes during a fuel drop event.

Provide all analytical model input parameters, and assumptions, used to determine these doses, include all input parameters necessary calculate the assumed fuel bundle source strength with the ORIGIN Computer code.

GE Response:

The following response addresses the questions of RAI 12.2-19 in the order presented:

Verify that the ESBWR design is intended to allow occupancy of the upper drywell during fuel movement/refueling.

Maintenance operations inside the upper drywell, (ISI of valves, RPV nozzles, RPV supports, etc) are performed during shutdown while the refueling activities are being carried out. Gamma doses due to penetration gap streaming are one of most significant dose sources, and use of shielding doors over the penetrations gaps during maintenance is common practice in operating BWRs to complement other ALARA requirements during shutdown.

Thus, in order to attain a significant reduction in doses during the maintenance and inspection tasks, in terms of ALARA, the following elements are implemented:

- Shield doors in the penetrations to the upper drywell radiation shield wall that surrounds the reactor pressure vessel of the ESBWR. The shield doors are kept closed during operation and refueling and the only time that the doors are open is to access the nozzles for ISI examination.
- Installation of a seal/shield ring located around the reactor vessel and the cavity that is maintained during refueling operations.
- Design of platforms and escape routes.

- Gamma dose rates at different drywell elevations have been calculated considering the presence or absence of steel shield doors at the penetrations.

Provide the dose rates in the upper drywell for the worst case normal fuel handling.

The normal fuel handling worst case scenario occurs when a fuel element moves in the normal position closest to the interior vessel wall (the water shielding is the minimum possible: 62 cm up to internal surface of the reactor vessel), and the element is on the centerline of the RPV nozzle with the largest diameter, i.e. penetrations of the shield wall that correspond to the main steam pipes.

The following calculation hypotheses are used:

- Doses are calculated for the worst case fuel handling scenario, which has been established on the platform at elevation +21000, room 1570, close to the shield wall penetration.
- The gamma radiation path is opening of the pipe nozzle.
- The shielding windows corresponding to said penetration are conservatively considered to be open.
- The resulting dose rate is calculated for these paths considering the time it takes the element to cross the front of the elevation.

Considering the exposure path and a 2 cm steel plug at the pipe nozzle inside the RPV, the resulting dose rate for the worst case fuel handling scenario is 58.93 mSv/h.

Other exposure pathways contribute to the total dose; such as, the continuous contribution from pipes of the RWCU system and the water of the reactor vessel, and the vessel core. However, their contribution of 1.16·10-2 mSv/h is trivial when compared to the worst case fuel handling scenario.

Maintenance operations shall be performed with the shielding windows that correspond to the aforementioned shield wall penetration closed. By closing the shielding windows, the resulting dose rate from the exposure path is 34.9 mSv/h. Health physics pre-job dose assessments, maintenance procedures and pre-job inspections will ensure that the shielding window penetration is closed prior to any fuel movement activities.

Include a description of radiation streaming through the shield penetration opening.

Some simplifications have been made in the defined geometry in order to build a model that can be used as a basis for calculations with the MCNPX code, and accurately depicts the streaming of the radiation through the penetrations. Thus, a sufficiently representative model is built to obtain acceptable engineering results. This reduces the geometrical complexity of the system and therefore obtains shorter computation periods. This is particularly relevant in the Monte-Carlo calculation.

Described below are some of the simplifications performed in the prepared model:

The thickness of the Reactor Pressure Vessel (RPV) wall has been defined as 182 mm of stainless steel. The shielding effect of the RPV water is conservatively eliminated from the re-fueling dose calculation. The inside RPV radius is 355.6 cm and its height (in the calculation) is 2312.5 cm. The estimated water volume (as a cylinder) is then 9.18E08 cm3.

Another geometrical dimension used in the calculation has been the defined bundle dimensions: 13.8 cm x 13.8 cm x 304.8 cm (only the active length is considered).

Since the shielding effects of the RPV water are eliminated, the dose associated with the Shield Wall penetrations are defined. Only the penetrations in the Shield Wall are included in the MCNPX code calculations for the complete containment. A separate dose calculation is performed for the radioactive water in the piping in another piping only model. Also, a separate dose calculation is performed for the fuel bundle being transferred during refueling operations. All the results will be superimposed. Separate dose calculations are utilized due to the limitations of the code in defining more than one source term per MCNPX case. However, it readily defines the dose contribution from each source when establishing the final dose in a specific point.

Two different models are utilized for each penetration studied. The first model does not consider shielding doors while the other model takes into account the shield door in the corresponding penetration. In either case, the shield doors have been modeled to the outer pipe diameter without the protective heat insulation.

Elements such as piping, steam lines, electrical penetrations, gratings, weirs, room baffles, stairs and other elements which can either increase or reduce the dose contribution in the model, without providing noticeable improvements in the accuracy of the dose calculation, have been omitted.

The Radiation Shield Wall has been included in the geometrical model with the following thickness in the upper drywell: 210 mm between el. 8000 and el. 10000, both from the RPV bottom elevation; and 160 mm for the rest of the Shield Wall up to the top elevation at el. 24180 (measured from the RPV bottom elevation).

The penetration nearest to the +21000 elevation is at el. 22840, has overall dimensions of 172 x 172 cm, and presents the special feature of having insulation around the main steam pipes. The outside diameter of the pipe is 71.1 cm with a steel thickness of 2.4 cm. The insulation thickness used in this case is 20 cm and the material chosen in the simulation is corrugated stainless steel in very thin laminated sheets (3 sheets with a thickness of 0.1 mm per cm). The insulation is made into cylindrical cases with a thickness of 0.6 cm, also of stainless steel.

<u>Calculation of the Homogenous Density of the Insulation (between shells).</u>

The external radius of the internal shell is 36.15 cm, while the interior radius of the external shell is 54.95 cm, and the distance between consecutive plates is 0.333 cm. The total number of plates (N) is calculated as follows:

$$N = \frac{54.95 - 36.15}{0.333} = 56\ plates$$

The volume of plate K (VK) shall be:

$$V_K = 2\pi \cdot (R_0 + K \cdot \Delta R) \cdot E \cdot L$$

Where:

R_0 – the external radius of the internal shell (36.15 cm);

R_{ext} – the internal radius of the external shell (54.95 cm)

ΔR – the distance between consecutive plates (0.333 cm);

E – the thickness of the plate (0.01 cm); and

L – the length of the pipe.

The total volume of the plates shall be:

$$V_T = \sum_{K=1}^{N} V_K = 2\pi \cdot E \cdot L \cdot \sum_{K=1}^{N} (R_0 + K \cdot \Delta R) = 2\pi \cdot E \cdot L \cdot \left(N \cdot R_0 + \frac{N+1}{2} \cdot N \cdot \Delta R \right)$$

The density of the homogenous material (the air inside it is considered negligible) shall be:

$$\rho_{Homog} = \rho_{SS} \cdot \frac{V_T}{\pi (R_{ext}^2 - R_0^2) \cdot L} = 0.029 \cdot \rho_{SS} = 0.23\ g/cm^3$$

Where:

ρ_{ss} – the density of the stainless steel, 8.0 g/cm3;

V_T – the total volume of the corrugated plates in the insulation; and

R_{ext}, R_0, and L have been defined above.

Estimate of the Shielding by the Reflective Insulation.

The value of the mass attenuation coefficient for iron for an energy value of 0.2 MeV (the average of the source) used in the shielding calculation is 0.138 cm^2/g.

If the photon is assumed to cross the insulation radially, the path traveled shall be 0.6 cm of 7.82 g/cc steel, 20 cm of 0.23 g/cc steel (homogenization of the plates) and 0.6 cm of 7.82 g/cc steel, resulting in a reduction factor of 0.145.

Therefore, if a photon crosses the insulation radially, the flow obtained shall be 0.145 times that obtained without insulation. For any other direction through the insulation, the path crossed shall be longer, so the attenuation effect would increase.

However, there some photons exit the Shield Wall without crossing the pipe through the penetration or through the Shield Wall. As a result, these photons are not attenuated by the insulation, thereby reducing the total flow to the detector.

It is important to point out that a plug must be placed in each main steam hole line before the fuel movement activities. Results from two different plug thickness were considered in the calculation: a 2 cm thick plug, and a 10 cm thick carbon-steel plug.

In each plug thickness case, the attenuation effect of shielding doors or the contribution without shielding doors is studied. In the case of shielding doors, the effect of removing

and not removing the reflective insulation is studied, adjusting the shielding door to the un-insulated pipe.

Before the calculations were performed, the most efficient detector position is established. A three detector input was studied with the following coordinates: Detector 1: (469.38, 53.05, 1000), Detector 2: (490, 70, 1000) and Detector 3: (520, 90, 1000).

From this data it can be inferred that the further from the shield wall, the faster the convergence and the lower the dose, due to the geometrical attenuation. This is because when tally F5 is used, the contribution of any photon source or collision point to the flux at the detector is proportional to:

$$\frac{p(\mu)\cdot e^{-\lambda\cdot R}}{2\cdot\pi\cdot R^2},$$

Where:

R - the distance from the source or collision point to the detector;

p(μ) – the value of the probability density function; and

λ - the relative number of mean free paths integrated over the trajectory from the source to the detector.

Thus, if the detector is very close to a high collision point (like the shield wall) where R is close to zero, the contribution to the tally score is too large, complicating the convergence of the problem.

To avoid this problem, the detector has been placed a half-meter away from the shield wall (530, 70, 1000) in the corresponding inputs to the MCNP-X code.

Provide the dose rates in the upper drywell for the worst case drop accident where the fuel rests against the reactor vessel, and where the fuel comes to rest on the vessel flange/refueling pool seal diaphragm.

a. Fuel rests against the reactor vessel

The case of the fuel element being transported within the vessel and suffering a drop accident and resting against the internal surface of the reactor vessel opposite a pipe outlet nozzle is considered highly unlikely; however, an estimation of the dose rate due to this case has been calculated as follows:

The dose rate indicated in worst case fuel handling scenario described above (58.93 mSv/h), for a peripheral fuel element located 62 cm from the internal surface of the reactor vessel, is decreased by the water shielding up to the internal surface of the reactor vessel. The change in the dose rate due to the loss of 62 cm of water shielding has been calculated using the QAD-CGGP Code and is equivalent to a 16.7 increase. Thus, the resulting dose rate due to a fuel element resting against the internal surface of the reactor vessel opposite a pipe outlet nozzle is 984.13 mSv/h.

b. Fuel comes to rest on the vessel flange/refueling pool seal diaphragm

Two different configurations are possible (see Figure 1 entitled "Upper Drywell Shielding Radiation Dose Rates with Fuel Bundle on Shield/Seal Ring") for this case. When the fuel element drops and comes to rest horizontally and leaning completely on the shielding ring, two positions have been studied:

1. The fuel element is located tangentially to the reactor vessel (position 1); or
2. The fuel element is as close as possible to the cylindrical wall of the cavity (position 2)

The most conservative case is in position 2, as close as possible to the cylindrical wall of the cavity, because the solid radiation penetration angle and its projection on the worker standing on the platform at Elev. +21000 is larger. The shield/seal ring, steel with a thickness of 15 cm, has been considered the largest protection element in this case. In accordance with these conservative assumptions, the dose rate on the platform at Elev. 22800 is 4.7 Sv/h, as indicated on Figure 1.

Describe maintenance activities anticipated in the upper drywell (from elevation 9060mm and up) and personnel egress routes during a fuel drop event.

Platforms are located between the Shield Wall and the Vent Wall, and between the RPV and the Shield Wall, in the Reactor Building to facilitate the in-service inspection and maintenance activities during refueling operations and shutdown conditions.

These platforms are designed to allow personnel access close to the RPV nozzles and the various equipment items in the area (valves, actuators, etc.), minimizing the ingress and egress routes and personnel doses.

The following maintenance activities will be performed in the upper drywell (from elevation 9060 mm and up):

Platforms Outside the Reactor Shield Wall

Platform at Elevation 9500

Maintenance and inspection is performed on the Gravity-Driven Cooling System (GDCS) lines and the Water Level Instruments. The platform has openings to allow pipe feed-through and to allow maintenance and dismantling operations of the GDCS valves at a lower level. Further, the platform allows feed-through of the valve actuators.

Platform at Elevation 12100

Maintenance and inspection operations in the lines of the IC Return – the platform has openings to allow pipe and valve actuator feed-throughs to allow maintenance and dismantling operations of the IC Return valves at a lower level

Platform at Elevation 16680

Maintenance and inspection operations in the RWCU and SDC RPV Nozzles - the platform has openings to allow feedwater pipe feed-throughs.

Platform at Elevation 18330

Maintenance and inspection operations in the feedwater RPV Nozzles - the platform has openings to allow feed-through of the feedwater pipes, IC pipes, GDCS pipes, etc.

Platform at Elevation 21000

Maintenance and inspection operations in the DPV and IC lines – the platform has openings to allow feed-through of the pipes and maintenance and dismantling operations in the valves and equipment installed on the platform at elevation 18500.

Two doors have been installed in the Shield Wall above this platform to access the platform located at elevation 19910, between the RPV and the Shield Wall, by means of a foot iron on the Shield Wall.

Platform at Elevation 21910

Maintenance and inspection operations in the Main Steam and Steam Flow Instrument RPV Nozzles are performed at this elevation.

Platforms Inside the Reactor Shield Wall

Platform at Elevation 10900

This platform allows access to the platform at elevation 7462.5 for inspection operations of the RPV supports and instrument pipes.

Platform at Elevation 19910

Maintenance and inspection operations of the RPV stabilizer and RPV stabilizer supports are performed at this elevation.

The attached Figure 2 entitled "RPV ISI Platforms Access Routes Development View by Outside" shows the personnel egress routes.

Provide all analytical model input parameters, and assumptions, used to determine these doses, include all input parameters necessary calculate the assumed fuel bundle source strength with the ORIGIN Computer code.

During a fuel drop event, a dose calculation has been performed for gamma radiation through the penetrations of the Shield Wall due to the release of iodine isotopes attributed to the break of four fuel elements in the RPV water and the refueling cavity.

The intensity of gamma radiation source for a GE-14 fuel element in an ESBWR reactor, with a burn-up of 35 GWd/tU, and after one day of decay following shutdown, is indicated in Table 1.

The source of gamma radiation due to the nuclides of a rod shall be four times greater than the results obtained in the aforementioned Table 1 (obtained with ORIGIN) considering that four fuel elements were assumed to be broken.

These calculations assume that all the iodine isotopes of the four fuel elements (with a burnup of 35 GWd/tU and one day after reactor shutdown) are released. The results are shown in Table 2.

The volume of RPV water plus the refueling cavity water dilutes the gamma radiation because both volumes are linked during the fuel element transfer operations. This results in a 0.26 dilution factor in the activity concentration of the water a with the gamma radiation vessel water source at 1.16E+13 photons/s, distributed evenly throughout the volume of water.

Table 3 shows the ORIGEN code input data.

DCD Impact:

No DCD changes will be made in response to this RAI.

Table -1

Gamma radiation source after one day of shutdown in a fuel element with a burnup of 35 GWd/tonU

E (MeV)	MeV/s
0.01	8.898E+14
0.025	2.979E+14
0.0375	5.272E+14
0.0575	5.303E+14
0.085	1.478E+15
0.125	5.274E+15
0.225	7.460E+15
0.375	3.501E+15
0.575	1.686E+16
0.85	2.290E+16
1.25	4.434E+15
1.75	1.130E+16
2.25	6.880E+14
2.75	6.402E+14
3.5	7.140E+12
5	6.792E+10
7	2.846E+06
9.5	4.449E+05
Total	**7.679E+16**

Table 2

Photon source due to the release of iodine isotopes contained in a fuel element (one day after shutdown).

Mean E (MeV)	Intensity (ph/s)					
	I – 131	I - 132	I - 133	I -134	I -135	TOTAL
0.01	3.96E+14	1.35E+15	8.87E+14	7.22E+07	1.29E+14	2.76E+15
0.025	2.44E+14	3.207E+14	1.81E+14	1.73E+07	2.61E+13	7.72E+14
0.038		1.880E+14	1.16E+14	1.03E+07		3.04E+14
0.058	5.79E+13	2.564E+14	1.63E+14	1.42E+07	2.32E+13	5.00E+14
0.085	1.20E+14	1.517E+14	9.39E+13	8.56E+06	1.33E+13	3.79E+14
0.125				1.50E+07		1.50E+07
0.225	3.03E+14	2.643E+14		1.37E+07	4.97E+13	6.17E+14
0.375	2.91E+15	1.871E+14	5.45E+13	3.08E+07	3.83E+13	3.19E+15
0.575	3.16E+14	7.819E+15	3.05E+15	9.65E+07		1.12E+16
0.85		5.073E+15	2.94E+14	3.67E+08	6.23E+13	5.43E+15
1.25		1.09E+15	1.72E+14	6.22E+07	4.47E+14	1.71E+15
1.75		1.010E+14		2.81E+07	1.46E+14	2.47E+14
2.25		8.051E+13		2.09E+06	1.58E+13	9.63E+13
2.75						0.00E+00
3.5						0.00E+00
5						0.00E+00
7						0.00E+00
9.5						0.00E+00
Total	4.35E+15	1.69E+16	5.02E+15	7.37E+08	9.50E+14	2.72E+16

Table 3

INPUT FOR ORIGEN2 CODE

Initial Composition of Materials in a GE-14 fuel element, Enriched to 4%.

Element	g	Element	g
922350	7263.2	922380	174316.3
080000	24420		
400000	83510	500000	1275
260000	102	240000	76.5
280000	42.5		
260000	30.8	240000	66
280000	318.9	060000	0.352
160000	0.044	220000	11
730000	2.2	140000	1.54

Irradiation at the reactor: 3975 MWd/MtHM

Burn-up time at the reactor 1652 days

Three equal burn-up steps with 30 days of re-fueling time.

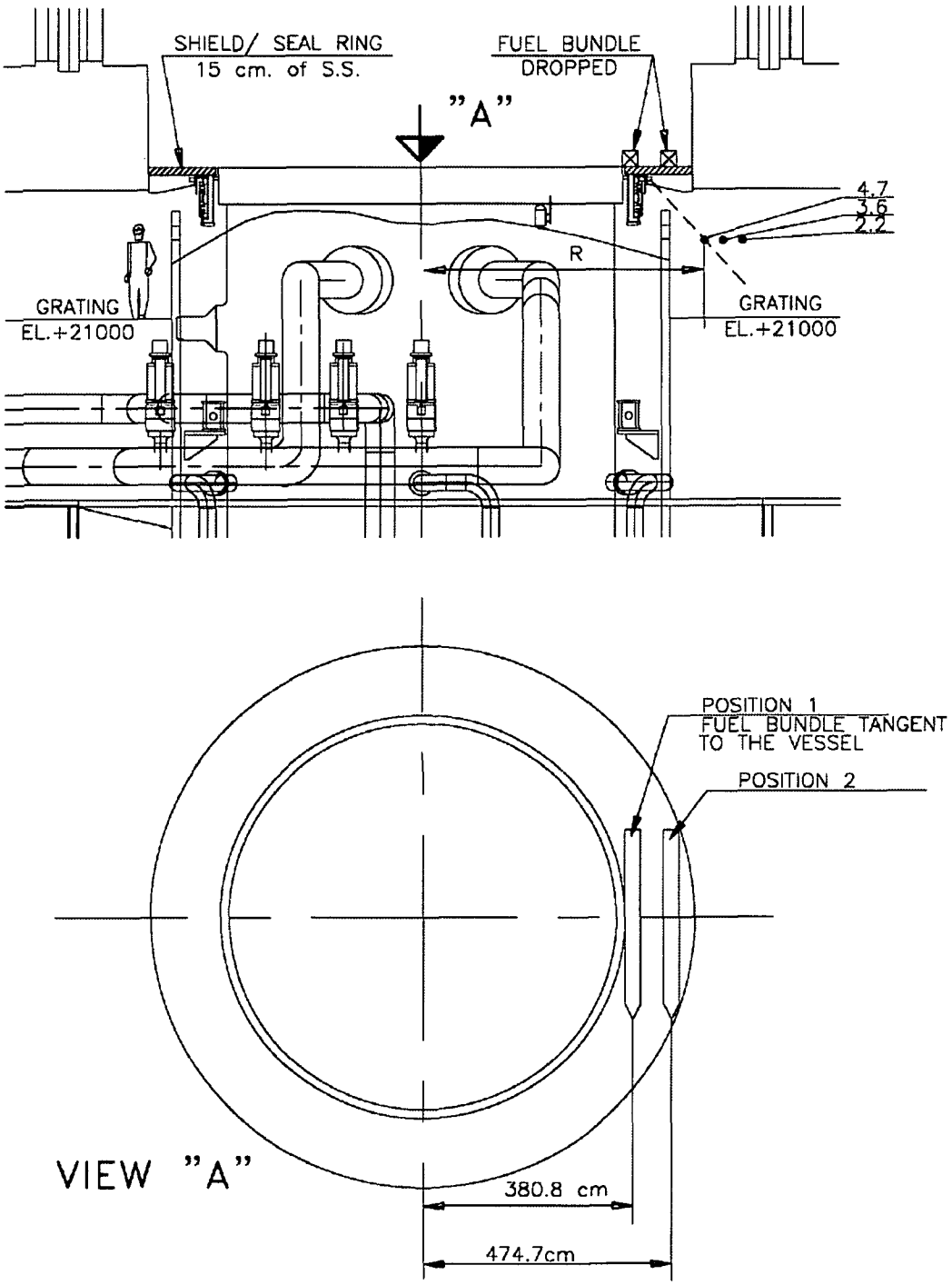

Figure 1
UPPER DRYWELL SHIELDING RADIATION DOSE RATES WITLE FUEL BUNDLE ON SHIELD/SEAL RING (Gy/h)

Fig. 2 RPV ISI PLATFORMS ACCESS ROUTES

DEVELOPED VIEW BY OUTSIDE

{{{Security-Related Information – Withhold Under 10 CFR 2.390}}}

NRC RAI 12.3-10:

Verify that the source term assumptions in NUREG-1465, and the associated dose criteria in GDC 19, were used to determine the in-plant post accident source terms and resultant doses to plant personnel. Provide the source term assumptions used in determining the dose rates indicated on the post-accident radiation zone maps (DCD Tier 2, Figures 12.3-43 through 12.3-51).

GE Response:

The ESBWR design has implemented the Alternate Source Term (AST) in accordance with Regulatory Guide 1.183, which revised the design basis source term from TID-14844 to NUREG-1465. GDC 19 from Appendix A to 10 CFR 50 "Protection by Multiple Fission Product Barriers of Control Room" under accident conditions has been used to obtain the limit of 0.05 Sv for whole body exposures.

The dose rates will be provided in DCD Tier 2 Revision 3, Figures 12.2-43 through 12.3-51, as shown in the response to RAI 12.4-31.

The following assumptions have been considered in the Post-Accident source term calculation:

- Contained radiation sources: Regulatory Guide 1.183 (Table 1 "BWR Core Inventory Fraction Released into Containment", page 1.183-13 and Table 4 "LOCA Release Phases", page 1.183-15)
- Airborne source term in accident conditions: based on the inventories related to the LOCA dose calculation in licensing topical report NEDE-33279P, "ESBWR Containment Fission Product Removal Evaluation Model."

DCD Impact:

No DCD changes will be made in response to this RAI.

RAI 12.3-12:

DCD Tier 2, Section 12.2.2 only addresses airborne radioactivity for environmental considerations.

Provide the nominal airborne concentrations of radionuclides in each building for normal power and shutdown operations.

Provide the assumptions made at arriving at these quantitative values sufficient to demonstrate that airborne concentrations in frequently occupied areas of the plant will be a small fraction of the inhalation values of Table 1 in 10CFR 20 Appendix B.

Tabulated values should reflect the nominal leakage values for typical equipment within the buildings, ventilation flow rates and building volumes, and be consistent with the values and assumptions used to evaluated plant ventilation system effluents.

GE Response:

Calculations of the nominal airborne concentrations of radionuclides in each building for normal power operations were conservatively performed for the Reactor Building, Fuel Building, Turbine Building and Radwaste Building.

Description of the methodology and airborne radionuclides concentrations will be provided in DCD Tier 2, revision 3 as shown in the attached mark-ups to DCD Subsections 11.1.5, 12.2.2, 12.2.3, and 12.3.7.

During shutdown, the airborne radionuclide concentrations are described in subsection 12.2.3 as provided on the attached mark-up.

DCD Impact:

DCD Tier 2 Subsections 11.1.5, 12.2.2, 12.2.3 and 12.3.7 will reflect the attached markups in Revision 3.

where:

F_c = cleanup system flow rate

E_c = fraction of radionuclide removed in cleanup demineralizer

F_s = steam flow rate

A = ratio of radionuclide concentration in steam to concentration in water (carryover ratio)

B = fraction of radionuclide in steam which is circulated through the condensate demineralizer

E_s = fraction of radionuclide removed in condensate demineralizer.

The Reference Plant and ESBWR plant parameters and the nuclide-dependent removal rate parameters used for the ESBWR are shown in Table 11.1-3. The nuclide-dependent parameters are the same as those used for the Reference Plant except for the fraction circulated through the condensate demineralizer.

11.1.4 Fuel Fission Production Inventory

Fuel fission product inventory information is used in establishing fission product source terms for accident analysis and is discussed in Chapter 15.

11.1.5 Process Leakage Sources

Process leakage results in potential release of noble gases and other volatile fission products via ventilation systems. Liquid from process leaks is collected and routed to the liquid-solid radwaste system. With the effective process offgas treatment systems now in use, the ventilation releases are relatively insignificant contributions to total plant releases.

Leakage of fluids from the process system results in the release of radionuclides into plant buildings. In general, the noble radiogases remain airborne and are released to the atmosphere with little delay via the building ventilation exhaust ducts. Other radionuclides partition between air and water and may plate-out on metal surfaces, concrete, and paint. Radioiodines are found in ventilation air as methyl iodide and as inorganic iodine (particulate, elemental, and hypoiodous acid forms).

As a consequence of normal steam and water leakage into the drywell, equilibrium drywell concentrations exist during normal operation. Purging of this activity from the drywell to the environment occurs via the CONAVS as described in Subsection 9.4.6.2.

The Section 12.2.3 sets out the models, parameters, and sources required to evaluate the airborne concentrations of radionuclides during plant operations in various plant radiation areas due to process leakage.

12.2.2 Airborne and Liquid Sources for Environmental Consideration

This subsection deals with the models, parameters, and sources required to evaluate the airborne concentration of radionuclides during plant operations in various plant radiation areas where personnel occupancy is expected. This subsection also deals with the sources and parameters required to evaluate airborne and liquid releases during normal plant operation for compliance with 10 CFR 20 and 10 CFR 50, Appendix I criteria.

12.2.2.1 Airborne Releases Offsite

Airborne sources are calculated using the source terms given in Section 11.1. A ratio to an expected release rate is shown in Table 12.2-15 for average annual releases and subject to the criteria of Reference 12.2-1.

The bases for these calculations are shown in Table 12.2-15.

Since the ESBWR is designed for a generic site, the determination of the annual average dilution factors (X/Q and D/Q) has been made considering multiple sites. Data used were derived from the ABWR program for 27 US sites and one fictitious site, assuming an 800 meter exclusion area boundary (site boundary). The value for X/Q was determined using the NRC computer code XOQDOQ (NUREG/CR-2919) for the above sites and the dispersion coefficient for the worst (most conservative) sector was chosen. The D/Q value was taken from a table of annual average meteorological coefficients prepared by the GE REFAE computer code.

The X/Q and D/Q values in Table 12.2-15 conservatively bound all 28 sites and are obtained following the methodology of NUREG-0800.

Table 12.2-15 contains values used in calculating the annual airborne release source term provided in Table 12.2-16. Design basis noble gas, iodine, and other fission product concentrations are taken from the tables in Chapter 11. The methodology of NUREG-0016 was used in determining the annual airborne release values in Table 12.2-16.

~~*Airborne Source During Refueling*~~

~~Airborne radioactivity during refueling is expected to be similar to that observed in operating sites. Experience has shown that airborne radioactivity can result from the water in the reactor cavity exceeding 38°C (100°F) and flaking of cobalt dioxide (CoO2) from the steam dryer and separator if their surfaces are allowed to dry. Other potential airborne sources resulting from reactor vessel head and internals removal have been determined from experience. I131, Co60, Mn54, Nb95, Zr95, Ru103, and Ce144 were the major radioisotopes found with Ce141, Cs137, Co58, and Cr51 at lower concentrations. The radioactive particulates ranged as high as 740 µBq/cm3 (2 x 10-8 Ci/cm3) and I131 as high as 1,500 µBq/cm3 (4 x 10-8 µCi/cm3).~~

~~To minimize airborne radioactivity the following actions are specified:~~

- ~~Keep steam dryer and separator surfaces wet or covered.~~
- ~~Cool fuel pools through large heat capacity heat exchangers.~~

~~•Fuel pool ventilation system designed to sweep the pool surface and prevent pool releases from mixing with the area atmosphere.~~

Annual Releases

Based upon the above criteria, the normal operating source terms are given in Table 12.2-16 and a comparison to 10 CFR 20 criteria is given in Table 12.2-17.

12.2.2.2 Airborne Dose Evaluation Offsite

Airborne doses were calculated based upon the criteria specified in Subsection 12.2.2.1 for compliance with 10 CFR 50, Appendix I. Doses were calculated using methodologies and conversion factors consistent with Regulatory Guides 1.109 and 1.111 as implemented in References 12.2-1 and 12.2-2. The airborne offsite dose calculation bases are provided in Table 12.2-18a. Default parameters of Regulatory Guide 1.109 were used in determining the offsite dose, with the exception of the explicitly stated values in Table 12.2-18a. The results of the dose analysis are given in Table 12.2-18b.

12.2.2.3 Liquid Releases Offsite ~~Sources~~

The ESBWR Radwaste System as described in Section 11.2 is designed to monitor and process all radioactive liquid streams in the ESBWR and to provide water management for those streams. Under normal conditions, the water management is not expected to result in any routine release of radioactive effluents in the liquid discharges. However, under some conditions such as high water inventory, some processed radioactive liquid effluents may be released. By administrative control, the discharge of these effluents through the discharge line is adjusted so that it can be shown that the discharge meets the requirements of 10 CFR 20 on isotopic concentration limits and Appendix I of 10 CFR 50 on annualized dose requirements.

The bounding annualized release is shown in Table 12.2-19b. Decontamination factors listed in Table 11.2-3 were used in determining the annual liquid release to the environment. The decontamination factors used were based on two in-series ion exchangers and weighted by liquid waste volume and activity for obtaining primary coolant activity values, which were used as input to the BWR-GALE computer code calculation (Reference 12.2-1). The BWR-GALE code input parameters for determining the Table 12.2-19b annual liquid release values are provided in Table 12.2-19a.

12.2.2.4 Liquid Doses Offsite

Liquid pathway doses were calculated based upon the criteria specified in Subsection 12.2.2.3 for compliance with 10 CFR 50, Appendix I. Dose conversion factors and methodologies consistent with Regulatory Guide 1.113 were used as described in Reference 12.2-4. It is assumed that a dilution factor of ten exists between the discharge canal and the subsequent consumption or recreational activity involving liquid effluents. This assumption is expected to bound conditions found at actual sites. The liquid effluent pathway offsite dose calculation bases are provided in Table 12.2-20a. The results of the dose calculation are given in Table 12.2-20b.

12.2.3 Airborne Sources Onsite

Design efforts are directed toward keeping all radioactive material in containers. Leaks from process systems, refuelling, and decontamination may lead to airborne radioactivity. Equipment cubicles, corridors, and areas routinely occupied by operating personnel do not contain significant airborne radioactivity sources. Radioactive equipment that could potentially leak is installed in separate shielded compartments not routinely occupied.

In general, airflow within the building ventilation systems is from areas of low potential for airborne contamination to areas of increasing potential. Thus, routinely occupied areas are maintained at low levels of airborne radioactivity. Data from operating BWRs corroborate the general lack of airborne activity in corridors and routinely occupied operating areas (Reference 12.2-04). Air samples and surface contamination swipe samples are performed to verify the absence of airborne and surface contamination.

Process leakage results in potential release of noble gases and other volatile fission products via ventilation systems. Leakage of fluids from the process system results in the release of radionuclides into plant buildings. In general, the noble radiogases remain airborne and are released to the atmosphere with little delay via the building ventilation exhaust ducts. Other radionuclides partition between air and water and may plate-out on metal surfaces, concrete, and paint. Radioiodines are found in ventilation air as methyl iodide and as inorganic iodine (particulate, elemental, and hypoiodous acid forms).

12.2.3.1 Calculation of Airborne Radionuclides

See Appendix 12.A

12.2.3.2 Reactor Building

The Reactor Building HVAC system is discussed in Section 9.4.6. Subsection 12.3.3.2.2/3 discusses the radiation control aspects of the HVAC system.

12.2.3.2.1 Airborne Sources During Normal Operation

The main source of airborne activity in the Reactor Building is leakage of primary coolant. Therefore, airborne activities in the Reactor Building are expected to be low except for within the reactor water cleanup (RWCU) pump and valve cubicle. This cubicle is not normally occupied due to radiation levels.

The contaminated area system conditions and circulates air through the contaminated areas of the building. Flow into both areas is directed from the corridors (point of highest pressure) to the equipment alcove rooms, then to the rooms themselves, and finally to the external wall pipe chases and from the pipe chases back to the HVAC system.

Access into the containment drywell is not permitted during normal operation. The ventilation system inside merely circulates the air, without filtering it. The only airflow out of the drywell into accessible areas is minor leakage through the wall. During maintenance, the drywell air is purged before access is permitted.

As a consequence of normal steam and water leakage into the drywell, equilibrium drywell concentrations exist during normal operation. Purging of this activity from the drywell to the environment occurs via the drywell purge system, which can be routed and processed through a charcoal filtration system. These are minor contributions to total plant releases.

The assumptions and parameters used to determine the airborne activity levels in the Reactor Building are listed in Table 12.2-22a. The airborne concentrations are provided in Table 12.2-22b. Even though the values presented were obtained in a very conservative manner, they are below the limits established in 10CFR 20 Appendix B table 1 column 3.

12.2.3.2.2 Airborne Sources During Refueling

Experience at operating BWRs has shown that airborne radioactivity can result from the reactor vessel dryer and separator if their surfaces are allowed to dry. Other potential airborne sources could occur during vessel head venting and fuel movement. The airborne radioactive material sources resulting from reactor vessel head removal are minimized by venting prior to removal either to the drywell purge exhaust system or to the main condenser, with vacuum supplied by the mechanical vacuum pump. The contribution to the airborne radioactivity due to the reactor vessel internals is minimized by keeping them wet or submerged.

Airborne radioactivity during refueling is expected to be similar to that observed in operating sites. Experience has shown that airborne radioactivity can result from the water in the reactor cavity exceeding 38°C (100°F) and flaking of cobalt dioxide (CoO_2) from the steam dryer and separator if their surfaces are allowed to dry. Other potential airborne sources resulting from reactor vessel head and internals removal have been determined from experience. I-131, Co-60, Mn-54, Nb-95, Zr-95, Ru-103, and Ce-144 were the major radioisotopes found with Ce-141, Cs-137, Co-58, and Cr-51 at lower concentrations. The radioactive particulates ranged as high as 740 $\mu Bq/cm^3$ (2×10^{-8} Ci/cm^3) and I-131 as high as 1,500 $\mu Bq/cm^3$ (4×10^{-8} $\mu Ci/cm^3$).

To minimize airborne radioactivity the following actions are specified:

- Keep steam dryer and separator surfaces wet or covered.
- Cool fuel pools through large heat capacity heat exchangers.
- Fuel pool ventilation system designed to sweep the pool surface and prevent pool releases from mixing with the area atmosphere.

12.2.3.3 Fuel Building

The Reactor Building HVAC system is discussed in Section 9.4.2. Subsection 12.3.3.2.5 discusses the radiation control aspects of the HVAC system.

The source of airborne activity in the fuel building is in the spent fuel storage pool and equipment areas. The ventilation system is designed to sweep air from the spent fuel pool surface, thereby removing the major portion of potential airborne contamination. In addition, evaporation from the spent fuel pool is minimized by cooling of the pool.

The assumptions and parameters used to determine the airborne activity levels in the spent fuel storage pool and equipment areas are listed in Table 12.2-22a. The airborne concentrations are provided in Table 12.2-22c. Even though the values presented were obtained in a very conservative manner, they are below the limits established in 10CFR 20 Appendix B Table 1 column 3.

12.2.3.4 Turbine Building

The Turbine Building HVAC system is discussed in Section 9.4.4.

The main potential source of airborne radioactivity within the Turbine Building is leakage from valves on large lines carrying high-pressure steam. The design provides for collection of this leakage and its transport back to the condenser. Therefore, noble gas airborne concentrations are expected to be negligible throughout the Turbine Building except for inside the steam jet air ejector (SJAE) cubicles. These areas are not normally occupied during operation, and the exhaust from these cubicles is exhausted to the environment after filtration to eliminate the possibility of contamination of adjoining areas.

Others sources of airborne activity in the Turbine Building atmosphere is equipment leakage.

The assumptions and parameters used to determine the airborne activity levels in the Turbine Building are listed in Table 12.2-22a. The airborne concentrations are provided in Table 12.2-22d. Even though the values presented were obtained in a very conservative manner, they are below the limits established in 10CFR 20 Appendix B table 1 column 3.

12.2.3.5 Radwaste Building

The Radwaste Building HVAC system is discussed in Section 9.4.3. Subsection 12.3.3.2.4 discusses the radiation control aspects of the HVAC system.

Corridors and routine access operating areas within the Radwaste Building are not expected to have significant airborne radioactivity levels. Equipment cubicles are infrequently accessed and may contain low levels of airborne radioactivity, but design provisions are provided to minimize the release of radioactivity.

Radwaste Building tanks are filled from the top and as the water splashes into the tanks, dissolved and entrained radioactivity may become airborne. This activity is not released into the atmosphere in the rooms because the tank vents are connected directly to the building ventilation system. Pumps and valves for radioactive systems in the Radwaste Building are located in separate compartments that are not normally occupied. The Radwaste Building ventilation design provides airflow from areas of low potential for airborne contamination to areas of increasing potential. This insures that any leakage from radwaste pumps and valves is not directed into normally occupied areas of the building, but is exhausted from the building.

The assumptions and parameters used to determine the airborne activity levels in the Radwaste Building are listed in Table 12.2-22a. The airborne concentrations are provided in Table 12.2-22e. Even though the values presented were obtained in a very conservative manner, they are below the limits established in 10CFR 20 Appendix B table 1 column 3.

~~12.2.3~~ 12.2.4 COL Information

None.

~~12.2.4~~ 12.2.5 References

12.2-1 U.S.N.R.C, "Calculation of Releases of Radioactive Materials in Gaseous and Liquid Effluents from Boiling Water Reactors," NUREG-0016, Revision 1, January 1979.

12.2-2 U.S.N.R.C., "GASPAR II Technical Reference and User Guide" NUREG/CR-4653, March 1987

12.2-3 U.S.N.R.C., "LADTAP II Technical Reference and User Guide" NUREG/CR-4013, April 1986

12.2-4 Sources of Radioiodine at Boiler Water Reactors, EPRI NP-495, Research Project 274-1, Final Report, February 1978.

Table 12.2-22a
Parameters and assumptions used for calculating inside the building airborne radioactivity concentrations

Parameter/Assumption	Value
Reactor Building outside Containment	
Source Term	Radioisotopes in reactor water and steam. See Section 11.1. Liquid Phase
Leakage Flowrate	3.9E-4 kg/s
Contaminated Volume	1781.5 m^3
Flashing Fraction	0.4
Normal HVAC flowrate	12.6 m^3/s
Fuel Building	
Source Term	Radioisotopes in spent fuel pool: 1% of radioisotopes in reactor water (see section 11.1), except H-3 (100% of section 11.1 value
Leakage Flowrate	9.4E-2 kg/s
Contaminated Volume	12897 m^3
Flashing Fraction	0.4
Normal HVAC flowrate	14.2 m^3/s
Turbine Building	
Source Term	Radioisotopes in reactor water and steam. See Section 11.1. Steam phase and liquid phase
Leakage Flowrate	0.12 kg/s
Contaminated Volume	93565 m^3
Flashing Fraction	0.4
Carry-over ratio	1 for noble gases 0.02 for iodines 0.001 for other isotopes
Normal HVAC flowrate	47.5 m^3/s
Radwaste Building	
Source Term	Radioisotopes in reactor water and steam See Section 11.1. Liquid Phase
Leakage Flowrate	1.5E-4 kg/s
Contaminated Volume	10447 m^3
Flashing Fraction	0.4
Normal HVAC flowrate	5E-4 /s

Table 12.2-22b
Reactor Building outside Containment airborne radioactivity concentrations during normal operation

Nucleide	Concentration Bq/m^3	10 CFR 20 Bq/m^3
I-131	4.8E+00	7.4E+02
I-132	4.5E+01	1.1E+05
I-133	3.3E+01	3.7E+03
I-134	8.2E+01	7.4E+05
I-135	4.7E+01	2.6E+04
Rb-89	7.7E+00	2.2E+06
Cs-134	5.6E-02	1.5E+03
Cs-136	3.7E-02	1.1E+04
Cs-137	1.5E-01	2.2E+03
Cs-138	1.6E+01	7.4E+05
Ba-137m	9.1E-02	3.7E+03
H-3	4.6E+00	7.4E+05
Na-24	4.0E+00	7.4E+04
P-32	8.2E-02	7.4E+03
Cr-51	6.2E+00	3.0E+05
Mn-54	7.2E-02	1.1E+04
Mn-56	4.7E+01	2.2E+05
Fe-55	2.1E+00	3.0E+04
Fe-59	6.2E-02	3.7E+03
Co-58	2.1E-01	1.1E+04
Co-60	4.1E-01	3.7E+02
Ni-63	2.1E-03	1.1E+04
Cu-64	5.9E+00	3.3E+05
Zn-65	2.1E+00	3.7E+03
Sr-89	2.1E-01	2.2E+03
Sr-90	1.5E-02	7.4E+01
Y-90	1.5E-02	1.1E+04
Sr-91	7.9E+00	3.7E+04
Sr-92	1.8E+01	1.1E+05
Y-91	8.2E-02	1.9E+03
Y-92	1.1E+01	1.1E+05
Y-93	7.9E+00	3.7E+04

Table 12.2-22b (Continued)
Reactor Building outside Containment airborne radioactivity concentrations during normal operation

Nucleide	Concentration Bq/m^3	10 CFR 20 Bq/m^3
Zr-95	1.6E-02	1.9E+03
Nb-95	1.6E-02	1.9E+04
Mo-99	4.1E+00	2.2E+04
Tc-99m	4.1E+00	2.2E+06
Ru-103	4.1E-02	1.1E+04
Rh-103m	4.0E-02	1.9E+07
Ru-106	6.2E-03	1.9E+02
Rh-106	1.4E-03	3.7E+03
Ag-110m	2.1E-03	1.5E+03
Te-129m	8.2E-02	3.7E+03
Te-131m	2.0E-01	7.4E+03
Te-132	2.0E-02	3.3E+03
Ba-140	8.2E-01	2.2E+04
La-140	8.2E-01	1.9E+04
Ce-141	6.2E-02	7.4E+03
Ce-144	6.2E-03	2.2E+02
Pr-144	5.7E-03	1.9E+06
W-187	6.1E-01	1.5E+05
Np-293	1.6E+01	3.3E+04

Table 12.2-22c
Spent Fuel Storage pool and Equipment Areas airborne radioactivity concentrations

Nucleide	Concentration Bq/m^3	10 CFR 20 Bq/m^3
I-131	1.0E+01	7.4E+02
I-132	9.0E+01	1.1E+05
I-133	7.0E+01	3.7E+03
I-134	1.5E+02	7.4E+05
I-135	9.7E+01	2.6E+04
Rb-89	1.1E+01	2.2E+06
Cs-134	1.2E-01	1.5E+03
Cs-136	7.9E-02	1.1E+04
Cs-137	3.2E-01	2.2E+03
Cs-138	2.8E+01	7.4E+05
Ba-137m	6.2E-02	3.7E+03
H-3	9.7E+02	7.4E+05
Na-24	8.3E+00	7.4E+04
P-32	1.7E-01	7.4E+03
Cr-51	1.3E+01	3.0E+05
Mn-54	1.5E-01	1.1E+04
Mn-56	9.4E+01	2.2E+05
Fe-55	4.5E+00	3.0E+04
Fe-59	1.3E-01	3.7E+03
Co-58	4.5E-01	1.1E+04
Co-60	8.7E-01	3.7E+02
Ni-63	4.5E-03	1.1E+04
Cu-64	1.2E+01	3.3E+05
Zn-65	4.5E+00	3.7E+03
Sr-89	4.5E-01	2.2E+03
Sr-90	3.2E-02	7.4E+01
Y-90	3.1E-02	1.1E+04
Sr-91	1.7E+01	3.7E+04
Sr-92	3.7E+01	1.1E+05
Y-91	1.7E-01	1.9E+03
Y-92	2.3E+01	1.1E+05
Y-93	1.7E+01	3.7E+04

Table 12.2-22c (Continued)
Spent Fuel Storage pool and Equipment Areas airborne radioactivity concentrations

Nucleide	Concentration Bq/m^3	10 CFR 20 Bq/m^3
Zr-95	3.4E-02	1.9E+03
Nb-95	3.4E-02	1.9E+04
Mo-99	8.7E+00	2.2E+04
Tc-99m	8.4E+00	2.2E+06
Ru-103	8.7E-02	1.1E+04
Rh-103m	7.3E-02	1.9E+07
Ru-106	1.3E-02	1.9E+02
Rh-106	6.0E-04	3.7E+03
Ag-110m	4.5E-03	1.5E+03
Te-129m	1.7E-01	3.7E+03
Te-131m	4.2E-01	7.4E+03
Te-132	4.2E-02	3.3E+03
Ba-140	1.7E+00	2.2E+04
La-140	1.7E+00	1.9E+04
Ce-141	1.3E-01	7.4E+03
Ce-144	1.3E-02	2.2E+02
Pr-144	8.2E-03	1.9E+06
W-187	1.3E+00	1.5E+05
Np-293	3.4E+01	3.3E+04

Table 12.2-22d
Turbine Building airborne radioactivity concentrations

Nucleide	Concentration Bq/m^3	10 CFR 20 Bq/m^3
Ar-41	1.7E+03	1.1E+05
Kr-83m	1.1E+02	3.7E+08
Kr-85m	2.1E+02	7.4E+05
Kr-85	9.1E-01	3.7E+06
Kr-87	5.9E+02	1.9E+05
Kr-88	6.7E+02	7.4E+04
Kr-89	5.9E+02	3.7E+03
Xe-131m	7.6E-01	1.5E+07
Xe-133m	1.1E+01	3.7E+06
Xe-133	3.3E+02	3.7E+06
Xe-135m	4.1E+02	3.3E+05
Xe-135	8.5E+02	3.7E+05
Xe-137	8.8E+02	3.7E+03
Xe-138	1.4E+03	1.5E+05
I-131	7.9E+00	7.4E+02
I-132	6.4E+01	1.1E+05
I-133	5.4E+01	3.7E+03
I-134	9.6E+01	7.4E+05
I-135	7.3E+01	2.6E+04
Rb-89	2.8E-01	2.2E+06
Cs-134	4.6E-03	1.5E+03
Cs-136	3.0E-03	1.1E+04
Cs-137	1.2E-02	2.2E+03
Cs-138	8.3E-01	7.4E+05
Ba-137m	1.2E-03	3.7E+03
H-3	3.8E+02	7.4E+05
Na-24	3.2E-01	7.4E+04
P-32	6.7E-03	7.4E+03
Cr-51	5.1E-01	3.0E+05
Mn-54	5.9E-03	1.1E+04

Table 12.2-22d (Continued)
Turbine Building airborne radioactivity concentrations

Nucleide	Concentration Bq/m^3	10 CFR 20 Bq/m^3
Mn-56	3.4E+00	2.2E+05
Fe-55	1.7E-01	3.0E+04
Fe-59	5.1E-03	3.7E+03
Co-58	1.7E-02	1.1E+04
Co-60	3.3E-02	3.7E+02
Ni-63	1.7E-04	1.1E+04
Cu-64	4.7E-01	3.3E+05
Zn-65	1.7E-01	3.7E+03
Sr-89	1.7E-02	2.2E+03
Sr-90	1.2E-03	7.4E+01
Y-90	1.2E-03	1.1E+04
Sr-91	6.2E-01	3.7E+04
Sr-92	1.3E+00	1.1E+05
Y-91	6.7E-03	1.9E+03
Y-92	8.5E-01	1.1E+05
Y-93	6.3E-01	3.7E+04
Zr-95	1.3E-03	1.9E+03
Nb-95	1.3E-03	1.9E+04
Mo-99	3.3E-01	2.2E+04
Tc-99m	3.1E-01	2.2E+06
Ru-103	3.3E-03	1.1E+04
Rh-103m	2.4E-03	1.9E+07
Ru-106	5.1E-04	1.9E+02
Rh-106	1.1E-05	3.7E+03
Ag-110m	1.7E-04	1.5E+03
Te-129m	6.7E-03	3.7E+03
Te-131m	1.6E-02	7.4E+03
Te-132	1.6E-03	3.3E+03
Ba-140	6.7E-02	2.2E+04
La-140	6.6E-02	1.9E+04
Ce-141	5.1E-03	7.4E+03
Ce-144	5.1E-04	2.2E+02
Pr-144	2.2E-04	1.9E+06
W-187	4.9E-02	1.5E+05
Np-293	1.3E+00	3.3E+04

Table 12.2-22e
Radwaste Building airborne radioactivity concentrations

Nucleide	Concentration Bq/m^3	10 CFR 20 Bq/m^3
I-131	4.3E+00	7.4E+02
I-132	3.5E+01	1.1E+05
I-133	3.0E+01	3.7E+03
I-134	5.3E+01	7.4E+05
I-135	4.0E+01	2.6E+04
Rb-89	3.1E+00	2.2E+06
Cs-134	5.0E-02	1.5E+03
Cs-136	3.3E-02	1.1E+04
Cs-137	1.3E-01	2.2E+03
Cs-138	9.1E+00	7.4E+05
Ba-137m	1.3E-02	3.7E+03
H-3	4.1E+00	7.4E+05
Na-24	3.5E+00	7.4E+04
P-32	7.4E-02	7.4E+03
Cr-51	5.6E+00	3.0E+05
Mn-54	6.5E-02	1.1E+04
Mn-56	3.7E+01	2.2E+05
Fe-55	1.9E+00	3.0E+04
Fe-59	5.6E-02	3.7E+03
Co-58	1.9E-01	1.1E+04
Co-60	3.7E-01	3.7E+02
Ni-63	1.9E-03	1.1E+04
Cu-64	5.2E+00	3.3E+05
Zn-65	1.9E+00	3.7E+03
Sr-89	1.9E-01	2.2E+03
Sr-90	1.3E-02	7.4E+01
Y-90	1.3E-02	1.1E+04
Sr-91	6.9E+00	3.7E+04
Sr-92	1.5E+01	1.1E+05
Y-91	7.4E-02	1.9E+03
Y-92	9.4E+00	1.1E+05
Y-93	6.9E+00	3.7E+04

Table 12.2-22e (Continued)
Radwaste Building airborne radioactivity concentrations

Nucleide	Concentration Bq/m^3	10 CFR 20 Bq/m^3
Zr-95	1.5E-02	1.9E+03
Nb-95	1.5E-02	1.9E+04
Mo-99	3.7E+00	2.2E+04
Tc-99m	3.5E+00	2.2E+06
Ru-103	3.7E-02	1.1E+04
Rh-103m	2.6E-02	1.9E+07
Ru-106	5.6E-03	1.9E+02
Rh-106	1.2E-04	3.7E+03
Ag-110m	1.9E-03	1.5E+03
Te-129m	7.4E-02	3.7E+03
Te-131m	1.8E-01	7.4E+03
Te-132	1.8E-02	3.3E+03
Ba-140	7.4E-01	2.2E+04
La-140	7.3E-01	1.9E+04
Ce-141	5.6E-02	7.4E+03
Ce-144	5.6E-03	2.2E+02
Pr-144	2.4E-03	1.9E+06
W-187	5.4E-01	1.5E+05
Np-293	1.4E+01	3.3E+04

RAI 12.4-05:

Identify the personnel access and egress routes of the plant (as depicted in DCD Tier 2, Figures 12.3-1 through 12.3-22) during normal power operations and shutdown conditions. Provide layout drawings of the Health Physics facilities (including men's and women's changing rooms, and decontamination facilities) and show their relationship to plant access/egress traffic patterns.

GE Response:

The personnel access and egress routes of the plant during normal power operations and shutdown conditions will be included as Figures 12.3-52 through 12.3-70 in DCD Tier 2, Revision 3 as shown on the attached markups.

Layout drawings of the Health Physics showing their relationship to plant access/egress traffic patterns will be included in the response to RAI 12.6-1.

A site-specific definition and identification of the personnel access/egress routes and access controls will be provided by the COL holder in the plant specific Health Physics Program.

DCD Impact:

The attached markups of Figures 12.3-52 through 12.3-70 will be reflected in DCD Tier 2, Revision 3.

Figure 12.3-52 REACTOR, FUEL & CONTROL BUILDINGS PERSONNEL EGRESS ROUTES. EL. -11500

{{{Security-Related Information – Withhold Under 10 CFR 2.390}}}

Figure 12.3-53 REACTOR, FUEL & CONTROL BUILDINGS PERSONNEL EGRESS ROUTES. EL. -6400

{{{Security-Related Information – Withhold Under 10 CFR 2.390}}}

Figure 12.3-54 REACTOR, FUEL & CONTROL BUILDINGS PERSONNEL EGRESS ROUTES. EL. -1000

{{{Security-Related Information – Withhold Under 10 CFR 2.390}}}

Figure 12.3-55 REACTOR, FUEL & CONTROL BUILDINGS PERSONNEL EGRESS ROUTES. EL. 4650

{{{Security-Related Information – Withhold Under 10 CFR 2.390}}}

Figure 12.3-56 REACTOR, FUEL & CONTROL BUILDINGS PERSONNEL EGRESS ROUTES. EL. 9060

{{{Security-Related Information – Withhold Under 10 CFR 2.390}}}

Figure 12.3-57 REACTOR, FUEL & CONTROL BUILDINGS PERSONNEL EGRESS ROUTES. EL. 13570

{{{Security-Related Information – Withhold Under 10 CFR 2.390}}}

Figure 12.3-58 REACTOR, FUEL & CONTROL BUILDINGS PERSONNEL EGRESS ROUTES. EL. 17500

{{{Security-Related Information – Withhold Under 10 CFR 2.390}}}

Figure 12.3-59 REACTOR, FUEL & CONTROL BUILDINGS PERSONNEL EGRESS ROUTES. EL. 27000

{{{Security-Related Information – Withhold Under 10 CFR 2.390}}}

Figure 12.3-60 REACTOR, FUEL & CONTROL BUILDINGS PERSONNEL EGRESS ROUTES. EL. 34000

{{{Security-Related Information – Withhold Under 10 CFR 2.390}}}

Figure 12.3-61 RADWASTE BULDING
PERSONNEL EGRESS ROUTES. EL. -9350

{{{Security-Related Information – Withhold Under 10 CFR 2.390}}}

**Figure 12.3-62 RADWASTE BULDING
PERSONNEL EGRESS ROUTES. EL. -2350**

{{{Security-Related Information – Withhold Under 10 CFR 2.390}}}

Figure 12.3-63 RADWASTE BULDING
PERSONNEL EGRESS ROUTES. EL. -9350

{{{Security-Related Information – Withhold Under 10 CFR 2.390}}}

Figure 12.3-64 RADWASTE BULDING PERSONNEL EGRESS ROUTES. EL. 10650

{{{Security-Related Information – Withhold Under 10 CFR 2.390}}}

**Figure 12.3-65 TURBINE BULDING
PERSONNEL EGRESS ROUTES. EL. -1400**

{{{Security-Related Information – Withhold Under 10 CFR 2.390}}}

Figure 12.3-66 TURBINE BULDING
PERSONNEL EGRESS ROUTES. EL. 4650

{{{Security-Related Information – Withhold Under 10 CFR 2.390}}}

**Figure 12.3-67 TURBINE BULDING
PERSONNEL EGRESS ROUTES. EL. 12000**

{{{Security-Related Information – Withhold Under 10 CFR 2.390}}}

**Figure 12.3-68 TURBINE BULDING
PERSONNEL EGRESS ROUTES. EL. 20000**

{{{Security-Related Information – Withhold Under 10 CFR 2.390}}}

**Figure 12.3-69 TURBINE BULDING
PERSONNEL EGRESS ROUTES. EL. 28000**

{{{Security-Related Information – Withhold Under 10 CFR 2.390}}}

Figure 12.3-70 TURBINE BULDING
PERSONNEL EGRESS ROUTES. EL. 30000 & 38000

{{{Security-Related Information – Withhold Under 10 CFR 2.390}}}

NRC RAI 12.4-07:

DCD Tier 2, Figures 12.3-3 and 12.3-12 depict subterranean radwaste piping galleries from the Reactor Building (RB) and Turbine Building (TB) respectively. Provide the expected dose rates in areas above and adjacent to the galleries during transfer of radioactive wastes and resins.

GE Response:

A gallery runs to the Radwaste Building starting at elevation –11500 of the Reactor Building and Fuel Building. This gallery contains pipes that convey fluids and spent resins to the radwaste treatment system. The gallery is divided into two areas: one for radwaste transfer pipes, and the other one for controlled access of personnel. The latter is protected from the former by a 20 cm thick, 150 cm high concrete wall. The entire gallery, up to and including its roofing at elevation –6400, is shielded with a layer of concrete 100 cm thick.

At elevation 2000 of the Turbine Building, there is also a gallery that runs to the Radwaste Building. The height of this gallery up to its ceiling is 215 cm. As above, this gallery is similarly divided into two areas, one for radwaste transfer pipes and another for controlled access of personnel, protected from the former by a 20 cm thick, 150 cm high concrete wall. The entire length of the gallery, up to its roof at elevation 4650, features a 100 cm thick concrete shield on the sides, with a concrete thickness of 50 cm for the top and bottom of the gallery.

When resins are conveyed from the Reactor Building to the Radwaste Building, the dose rate in the controlled access area has been established at 6.58 mSv/hr, while the dose rate outside the gallery is of 6.41E-04 mSv/hr on the sides and 5.00E-04 mSv/hr for the area located above the gallery roof.

When draining the sumps through this gallery, the dose rate achieved in the controlled access corridor is 3.13E-02 mSv/hr.

Similarly, when spent resins are carried through the gallery extending from the Turbine Building to the Radwaste Building, the dose rate reached in the controlled access area is 4.86E-01 mSv/hr, while the dose rate outside the sides of the gallery reaches 7.45E-05 mSv/hr, and 7.45E-05 mSv/hr above the gallery roof.

When draining the sumps through this gallery, the dose rate achieved in the controlled access corridor from the Turbine Building to the Radwaste Building is 4.72E-05 mSv/hr.

DCD Impact:

No DCD changes will be made in response to this RAI.