REGIONAL TECHNICAL ASSISTANCE REQUEST FORM

Date: 9/8/95

Mail or E-Mail to: Donald A. Cool (DAC), Mail Stop: T-8 F5, Division of Industrial and Medical Nuclear Safety, NMSS **If E-mail, cc:** CLE

From: M. Shanbaky (Name and E-mail initials) **Region** I
Chief, Nuclear Materials Safety and Safeguards Branch

Licensee: Shield Alloy **License No.:** ~~STB-281~~ SMB-743

☐ **Control No.** N/A **(if applicable)**

☑ **Letter dated:** 3/14/95, 5/15/95 **(if applicable)**

☑ **Suggested change in licensing procedure (enclosed):** Licensee wants to obtain an adjusted DAC based upon particle sizing and thorium + uranium to gross α ratios.

☑ **Problem/Issue:** Are these adjusted DAC's acceptable?

☑ **Action Required:** Review of data from licensee's documents dated March 14 and May 15, 1995 (Both of these documents are in response to a CAL) and Sept 22, 1995 * See Item 1 of letter

Recommended Action (with revisions): ☑ Approve or ☐ Reject
Region I recommends that the licensee be able to use adjusted DAC's.

Remarks:

Headquarter Reviewer:
Regional Reviewer: Sher Arredondo
Reviewer Code: K6
Reviewer Phone No.: (610) 337-5342 **FAX No.:** (610) 337-5269
Request Needed by: N/A / / (date)

Form TAR-10
9/93

SHIELDALLOY METALLURGICAL CORPORATION

WEST BOULEVARD
P.O. BOX 768
NEWFIELD, NJ 08344
TELEPHONE (609) 692-4200
FAX (609) 692-4017

September 22, 1995

Mohamed M. Shanbaky, Ph.D.
Nuclear Materials Safety Branch
Division of Radiation Safety and Safeguards
U. S. Nuclear Regulatory Commission
475 Allendale Road
King of Prussia, Pennsylvania 19406-1415

Re: Materials License No. SMB-743

Dear Dr. Shanbaky:

Shieldalloy Metallurgical Corporation (SMC) is in receipt of your letter dated July 21, 1995 requesting additional information with respect to SMC's request to adjust the Derived Air Concentration (DAC) for airborne thorium and uranium activity at SMC's Newfield, New Jersey facility. Attached is our response to your questions. Please contact me at (609) 692-4200 if you have any additional questions.

Sincerely,

C. Scott Eves, RSO
Vice President, Environmental Services

cc: H. N. Schooley
S. Arredondo, Region I

RESPONSE TO USNRC QUESTIONS
REGARDING ADJUSTMENTS TO DAC FOR AIRBORNE THORIUM AND URANIUM

USNRC Question 1: You are authorized to possess thorium and uranium in any form. In your analyses and calculations, you assign the thorium and uranium aerosol in the workplace to inhalation Class Y. Please state what forms of these materials you use and justification for using Class Y. A clarification of this point is necessary because the DAC for Class W is 50% lower than that for Class Y, and appropriate adjustments must be made depending upon the for that is used.

SMC Response: SMC works only with thorium and uranium in oxide form. The International Commission on Radiological Protection states that, for dose assessment purposes, uranium oxides and thorium oxides are assigned to inhalation Class Y (ICRP Report No. 30, "Limits for Intakes of Radionuclides by Workers", pages 100 and 102). Therefore, SMC assigns all airborne radioactivity measured during licensed operations to inhalation Class Y.

USNRC Question 2: You used isotopic ratios to calculate the thorium and uranium activity from the results of gross alpha counting. This value is the ratio of the concentration of thorium and uranium activity to the total activity of alpha emitters in materials used at your facility, and was determined by isotopic analysis. You did not provide assurances that this ratio will reflect the ratio of emissions from the various alpha emitters in an air sample. This latter ratio may differ from that obtained by isotopic analysis because of the inaccuracies in determining counting efficiency such as self-absorption, geometry and detector efficiency. Please provide a justification for using this scaling method based upon evidence that this ratio will reflect the ratio of emission in an air sample.

SMC Response: The following is the methodology SMC uses to convert gross alpha activity in/on a sample (e.g., air filter or smear) into ^{232}Th activity in/on that sample:

$$A_{Th}(Bq) = A_{\alpha}(Bq) \times 0.076$$

where A_{Th} = the ^{232}Th activity in/on the sample and A_{α} = the measured gross alpha activity in/on the sample. For ^{238}U, the following methodology is used:

$$A_{U}(Bq) = A_{\alpha}(Bq) \times 0.061$$

where A_U = the ^{238}U activity in/on the sample. In the unlikely event of a systematic error in the procedure for determining A_{α} for a filter (i.e., efficiency, geometry, etc.), the A_{Th} or A_U for that filter will, depending upon the error type, be greater or less than the true ^{232}Th activity on the filter. However, the ratio of A_{Th} to A_{α}, or A_U to A_{α}, will not change since the uranium, thorium, and their daughters are intimately combined

(e.g., on an atomic level) in the material and thus are immune from fractionation. Aside from heating, which only occurs during a single stage of ferrocolumbium processing (e.g., during a heat), SMC cannot envision a physical mechanism that would preferentially diminish detection of certain of the alpha-emitting daughters in the thorium series without doing the same for the remainder.[1]

The counting procedure SMC uses to obtain gross alpha activity on an air filter is consistent with industry standards. An alpha source that is traceable to the National Institute of Standards and Technology (NIST), with the same geometry (e.g., size and surface area) as the air filters to be counted, is used to determine the efficiency of a zinc sulfide detector. Corrections are made for background contribution to the gross counting results. Corrections for self-absorption of alphas during the counting process are not necessary since there is negligible dust loading and surface deposition on the filters. Based upon confidence in the counting procedure and confidence in the assessment of the thorium-to-gross alpha and uranium-to-gross alpha ratios, SMC is confident that the "scaling method" results in an acceptable means of estimating airborne thorium and uranium in the workplace.

USNRC Question 3: You stated in your discussion of the analysis of the sampling results that the AMAD was calculated by calculating the mean particle size for the distribution. The correct quantity however, is the median size. Please clarify this point by providing details on the method used to calculate the AMAD.

SMC Response: The median of a set of measurements is defined as that value that falls in the middle when the measurements are arranged in order of magnitude. Attachment 2 of our May 11, 1995 letter clearly demonstrates that the individual measurements of particle size are, in fact, the median diameter of each distribution.[2] Since more than one assessment of median diameter was made, a simple average (mean) of the median diameters from each location was taken to represent a single AMAD for that location.[3] These were the values presented in Item 3 of our May 11, 1995 letter, and reported in units of activity median aerodynamic diameter.

USNRC Question 4: In addition to our concerns regarding calculation of the AMAD, we also note that the Graseby/Anderson Model Mark III particle fractionating sampler that you used is susceptible to many errors that would result in nonrepresentative particle size distributions. These include changes in air flow

---

1 During a heat, the gaseous daughters of thorium and uranium are emitted. However, this action serves to reduce the thorium- or uranium-to-gross alpha ratio when the emissions are collected. Consequently, use of the above thorium-to-gross alpha and uranium-to-gross alpha ratios for all measurement conditions results in a conservative assessment of dose.

2 Schooly, N.E., and C. S. Eves, Shieldalloy Metallurgical Corporation, written communication to Thomas T. Martin, Regional Administrator, USNRC, May 15, 1995.

3 The median of the measured particle size distributions are normally distributed about some mean value. Therefore, this approach is statistically acceptable.

rates, operating pressure, collection plate spacing, loss of sample due to movement of the sampler, calibration of the sampler, and other factors. The method is also subject to substantial errors due to particle bounce if proper precautions are not taken. The above concerns are heightened by the fact that data analysis was conducted offsite, thus involving transportation of the samples. Please describe the methods used to obtain the samples, the operating procedures for calibration and sampling, the precautions taken during transportation, the methods used to minimize particle bounce and their effects on alpha counting, and the qualifications of the person(s) who operated the sampler and shipped the samples for analysis. Error estimates for the activity determined for each stage should also be provided.

SMC Response: The potential errors referenced in Question 4 are equally applicable to any form of air monitoring, whether there is a size fractionating device in line with the collection media or not. However, it is important to note that the majority of these potential errors (e.g., loss of sample due to movement of the sampler, particle bounce, transportation losses) will result in preferential selection of small particles over large particles if they were to occur.[4] Improper plate spacing is not possible due to the design of the device. The operating flow is monitored similar to the way in which air flow rate is monitored during conventional air sampling. As long flow is maintained, air will be drawn through the system. Attachment 2 contains a description of and operating instructions for the Graseby/Anderson sampler.

It is important to note that the critical information for determining particle size by this methodology is the relative alpha activity per stage. The airborne concentration of alpha emitters (e.g., pCi per liter) during the sampling period is of little importance. Therefore, knowledge of the air flow rate through the system is also of limited importance.

After the sample is collected, the filters are removed from the sampler assembly. Each filter is placed in a separate collection container, the containers are sealed and then placed in a transport container for shipment. The filters remain in the containers until they are removed at the commercial analytical laboratory. The laboratory determined the alpha activity on each filter by direct counting of the dissolved filter and the activity from the container wash-out.

Sample collection and shipping for this effort was performed by a consultant to SMC (the former SMC RSO) who has a number of years of experience of experience in collecting/handling/shipping air samples for a variety of radiological and stable contaminants.

The filters used on the stages of the sampler were glass fiber. This filter type is designed to prevent loss of larger particles due to "particle bounce" during sample collection through the trapping action of the fibers.

---

[4] As a result, the internal doses, as calculated using the modified DAC, will be conservative (e.g., overestimated).

The counting error associated with analysis of alpha activity on each stage is included herein as Attachment 1.

USNRC Question 5: Please provide assurances that the air sampling data, particularly the particle size distribution data, is representative of the type of aerosols that workers are exposed to at each work location. Although some information was provided, it was insufficient to provide this assurance.

SMC Response: The Graseby/Anderson sampler was placed in the vicinity of the mixing/blending operation and the tapping operation, as close as possible to where personnel were likely to be positioned.[5] The mixing/blending operations themselves do not fractionate by particle size or in any other way distort the physical and chemical properties of the airborne radioactive constituents produced. Furthermore, the density and deposition velocity of the materials in use are not conducive to wide dispersion as a result of unusual airflow patterns.

The data acquired for the particle size assessment are as representative as the conventional stationary air sampling data that have been acquired in these work areas over the years, and that are typically used throughout the nuclear industry.[6] Therefore, SMC is confident that the measurements of particle size adequately and conservatively reflect the particle sizes in the breathing zone of workers.

---

5 Because of the physical size of the sampling device and our desire to not impede the movements of the worker, it was not possible to place the sampling head as close to the source of emissions as the worker (e.g., within 30 cm. of the head of the worker, as recommended in Section 3.1, of NUREG-1400, "Air Sampling in the Work Place"). Consequently, the data from this assessment reflect significantly smaller particle sizes than would be expected if the collection locations were closer to the source due to the increased proximal deposition of larger particles over smaller particles. As a result, the internal doses, as calculated using the modified DAC, will be conservative (e.g., overestimated).

6 Hickey, E. E., G. A. Stoetzel, D. J. Strom, C. R. Cicotte, C. M. Wiblin and S. A. McGuire, "Air Sampling in the Workplace", NUREG-1400, Section 3.0, September, 1993.

ATTACHMENT 1
PARTICLE SIZE DATA FROM D.111 OPERATIONS

Location	Stage	Effective Cut Diameter (microns)	Total Activity (pCi)	Percent of Total Activity	Cumulative (Percent Less Than)
Vicinity of scale, 10 feet from hopper	0	13.6 and above	5.90 ± 1.2	8.81	91.19
	1	8.6	3.76 ± 0.98	5.61	85.58
	2	5.6	2.94 ± 0.86	4.39	81.19
	3	4.0	5.5 ± 1.2	8.21	72.98
	4	2.5	11.0 ± 1.7	16.42	56.55
	5	1.3	10.6 ± 1.6	15.83	40.73
	6	1.8	17.7 ± 2.2	26.43	14.3
	7	.54	6.1 ± 1.2	9.11	5.2
	Final	Less than 0.54	3.48 ± 0.93	5.2	0
		TOTAL	66.98		
Vicinity of scale, 10 feet from hopper	0	13.6 and above	3.37 ± 0.88	9.2	90.80
	1	8.6	3.17 ± 0.88	8.65	82.15
	2	5.6	2.21 ± 0.76	6.03	76.11
	3	4.0	2.48 ± 0.81	6.77	69.34
	4	2.5	3.00 ± 0.87	8.19	61.15
	5	1.3	5.20 ± 1.1	14.20	46.96
	6	1.8	5.50 ± 1.1	15.02	31.94
	7	.54	5.70 ± 1.1	15.56	16.38
	Final	Less than 0.54	6.00 ± 1.2	16.38	0
		TOTAL	36.63		

Location	Stage	Effective Cut Diameter (microns)	Total Activity (pCi)	Percent of Total Activity	Cumulative (Percent Less Than)
Vicinity of scale, 10 feet from hopper	0	13.6 and above	3.93 ± 0.98	13.18	86.82
	1	8.6	2.71 ± 0.84	9.09	77.73
	2	5.6	3.42 ± 0.94	11.47	66.25
	3	4.0	2.76 ± 0.82	9.26	56.99
	4	2.5	2.34 ± 0.77	7.85	49.14
	5	1.3	3.26 ± 0.91	10.94	38.21
	6	1.8	2.66 ± 0.84	8.92	29.29
	7	.54	3.03 ± 0.90	10.16	19.12
	Final	Less than 0.54	5.70 ± 1.2	19.12	0
		TOTAL	29.81		
Outside entrance to control room on second floor.	0	13.6 and above	4.60 ± 0.69	9.21	90.79
	1	8.6	5.70 ± 1.2	11.41	79.38
	2	5.6	3.02 ± 0.87	6.05	73.33
	3	4.0	4.10 ± 1.0	8.21	65.13
	4	2.5	3.47 ± 0.95	6.95	58.18
	5	1.3	5.40 ± 1.2	10.81	47.37
	6	1.8	3.09 ± 0.80	6.19	41.18
	7	.54	3.47 ± 0.81	6.95	34.23
	Final	Less than 0.54	17.1 ± 2.2	34.23	0
		TOTAL	49.95		

Location	Stage	Effective Cut Diameter (microns)	Total Activity (pCi)	Percent of Total Activity	Cumulative (Percent Less Than)
Outside entrance to control room on second floor.	0	13.6 and above	190.0 ± 16	39.6	60.4
	1	8.6	13.6 ± 3.7	2.83	57.57
	2	5.6	9 ± 2.8	1.88	55.69
	3	4.0	12.4 ± 3.5	2.58	53.11
	4	2.5	8.3 ± 2.8	1.73	51.38
	5	1.3	19.8 ± 4.1	4.13	47.25
	6	1.8	32.5 ± 5.4	6.77	40.48
	7	.54	42.2 ± 5.9	8.8	31.68
	Final	Less than 0.54	152.0 ± 14	21.68	0
		TOTAL	479.8		

ATTACHMENT 2
GRASEBY/ANDERSON SAMPLER

GRASEBY ANDERSEN

IN-STACK PARTICLE FRACTIONATING SAMPLER

This sampler collects and automatically sizes all stack particulates in situ.*

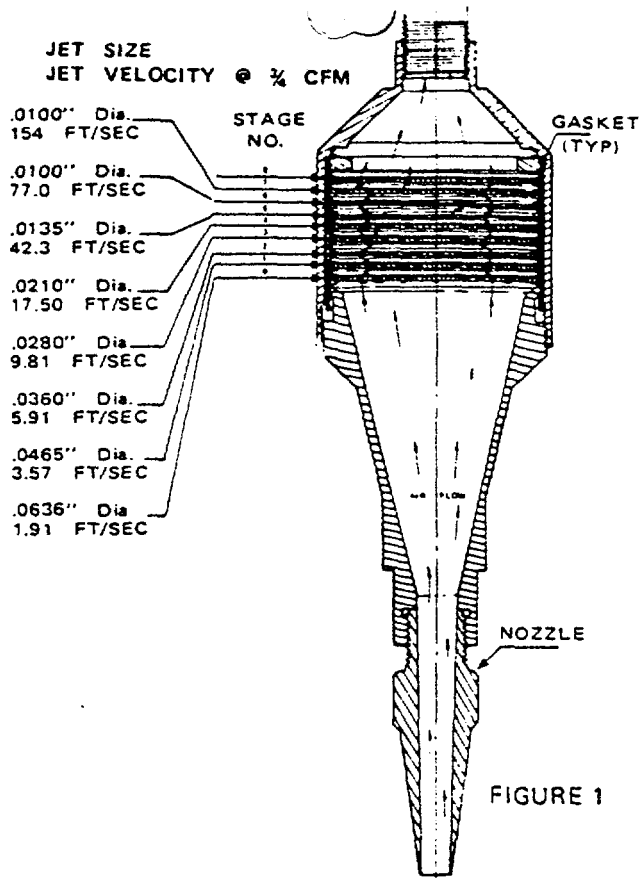

FIGURE 1

• FEATURES

- Fractionates and collects all stack particulates into ten aerodynamic size ranges (including preseparator and backup filter) (See Table I).
- Optional stainless steel preseparator and standard backup filter holder for absolute collection of large (>10 microns) and small (<0.4 microns) particles respectively.
- Constant pressure drop — accurate flow measurement
- Stainless steel case, plates, holder and spacers permit use in stack temperatures up to 1500°F
- Multi-jet multi-stage inertial impactor-patented concept
- Inertial separation incorporates size, shape, and density of particles into aerodynamic dimensions
- Eliminates need for tedious microscopic sizing and counting
- Precision: 99.5%
- Simple to operate, highly versatile, easily cleaned, all parts interchangeable
- Easy adaptation to the "EPA type" pitobe
- Applicable in all stack concentrations up to 1 grain/SCF. Optional preseparator permits sampling in higher grain loadings.
- Flow rates from 0.1 to 0.75 ACFM permit any normal inlet nozzle velocity desired by using the six standard gooseneck nozzle sizes (½", ⅜", 5/16", ¼", 3/16", ⅛"). Straight nozzles and elbow adapters are available
- Compact in size, 10" maximum length (including nozzle) x 2.8" diameter, permits direct insertion into stack through standard 3" opening; preseparator will fit through 3" port also
- Available in 6 and 8 stage, high and low temperature and low corrosion configurations.
- Andersen sampler can be placed in any position for accurate collection and sizing

• APPLICATION

The Andersen Stack Sampling Head is designed to adapt to other commercially available stack trains containing an "EPA type" pitobe. This sampler is useful for in-stack sampling when grain loading and/or particle size distribution is required. Fractionating particles aerodynamically in-stack provides information that is not available with other stack samplers. This information is important in determining the following:

1. Particle behavior after leaving the stack
2. Area of environmental deposition
3. Probable point of respiratory deposition
4. Type of control equipment needed to collect the particles
5. Collection efficiency of existing control equipment

*Meets requirements of OSHA for respirable/non-respirable segregation.

. Compliance with state and federal regulations

.ocation of the Stack Head is determined ›y individual stack characteristics. The ›ost important criteria is to select sam-›ling points whose effluents are repre-entative of the entire stack. Normally, ampling is performed downstream from :ollection equipment to monitor collec-:ion efficiencies. Even wet plumes may be sampled by preheating and holding Stack Head temperature above the dew point.

· DESIGN

The Andersen Stack Sampling Head has been designed to operate with existing stack trains containing the "EPA type" pitobe by means of a minor modifica-tion to the pitobe. This permits use of existing stack samplers with or without the Andersen impactor depending upon the necessity of particle sizing for specific tests.

The Stack Head consists of a stainless steel case and ½ " NPT female pipe fittings. It is designed to be inserted directly into the stack (standard 3 inch opening) where high temperature and/or corrosive conditions may exist.

The Mark III (Figure 2) Andersen Stack Sampler contains nine jet plates, each having a pattern of precision-drilled orifices. Special collection substrates, (e.g., glass fiber, aluminum foil, etc., Fig. 3), placed on the jet/collection plates, permit lighter tare weights for gravimetric analyses and a variety of collection materials for chemical analyses. The Sampler may be used with or without the collection substrate. The nine plates, separated by 2.5 millimeter stainless steel spacers, the preseparator and the backup filter divide the sampler into ten fractions or particle size ranges. The jets on each plate are arranged in modified concentric circles which are offset on each succeeding plate. The size of the orifices is the same on a given plate, but is smaller for each succeeding downstream plate. Therefore, as the sample is drawn through the sampler at a constant flow rate, the jets of air flowing through any particular plate direct the particulates toward the collection substrate on the downstream plate directly below the circles of jets on the plate above. Since the jet diameters decrease from plate to plate, the velocities increase such that whenever the velocity imparted to a particle is sufficiently great, its inertia will overcome the aerodynamic drag of the turning airstream and the particle will be impacted on the collection substrate. Otherwise, the particle remains in the airstream and proceeds to the next plate. Since the particle deposit areas are directly below the jets, seven of the plates act as both a jet stage and a collection plate. Thus, No. 0 plate is only a jet stage and No. 7 plate is only a collection plate. All component parts are 310 stainless steel. The temperature limitation of the sampler is approximately 1500 degrees Fahrenheit without glass filter collection media, 1000°F with glass fiber collection media.

A stainless steel preseparator has been designed to fit directly into the upstream end of the stack head and should be used whenever sampling in stacks which have particles larger than 10 microns. The preseparator-impactor assembly will fit through a standard 3" port.

The Stack Sampler is designed to operate at 0.75 ACFM or less. An optimum flow rate is around 0.5 ACFM (Table I shows the effective cutoff diameter for each stage at various flow rates at 70°F).

The Andersen Stack Sampler is also available with teflon gaskets, aluminum plates and in six stage configurations for use in low temperature, non-corrosive atmospheres, or in low grain loading applications.

• OPERATION

A vacuum source is used to draw a sample of the stack's effluent stream through the Andersen Sampler. All particulates entrained in the air stream are inertially impacted on the preweighed collection surfaces. The size ranges of particles deposited on each stage are shown in Table I. It is recommended that the preseparator be used to remove the larger particles when conditions warrant and it is neces-

TABLE I

50% EFFECTIVE CUT DIAMETER

PARTICLE DENSITY = 1.0 gm/cc

AIR TEMP = 70.0°F

FLOW ACFM	STAGE NO. 0	CYCLONIC PRESEPA-RATOR	STAGE NO. 1	STAGE NO. 2	STAGE NO. 3	STAGE NO. 4	STAGE NO. 5	STAGE NO. 6	STAGE NO. 7
0.1	29.9	22.4	18.7	12.7	8.7	5.6	2.9	1.8	1.2
0.2	21.3	16.0	13.3	9.0	6.2	4.0	2.0	1.3	0.87
0.3	17.4	13.0	10.8	7.4	5.0	3.2	1.6	1.0	0.69
0.4	15.0	11.3	9.4	6.4	4.3	2.8	1.4	0.87	0.59
0.5	13.4	10.1	8.4	5.7	3.9	2.5	1.2	0.77	0.52
0.6	12.3	9.2	7.6	5.2	3.5	2.3	1.1	0.70	0.47
0.7	11.4	8.5	7.1	4.8	3.3	2.1	1.0	0.64	0.43
0.75	10.9	8.2	6.8	4.6	3.2	2.0	1.0	0.61	0.41

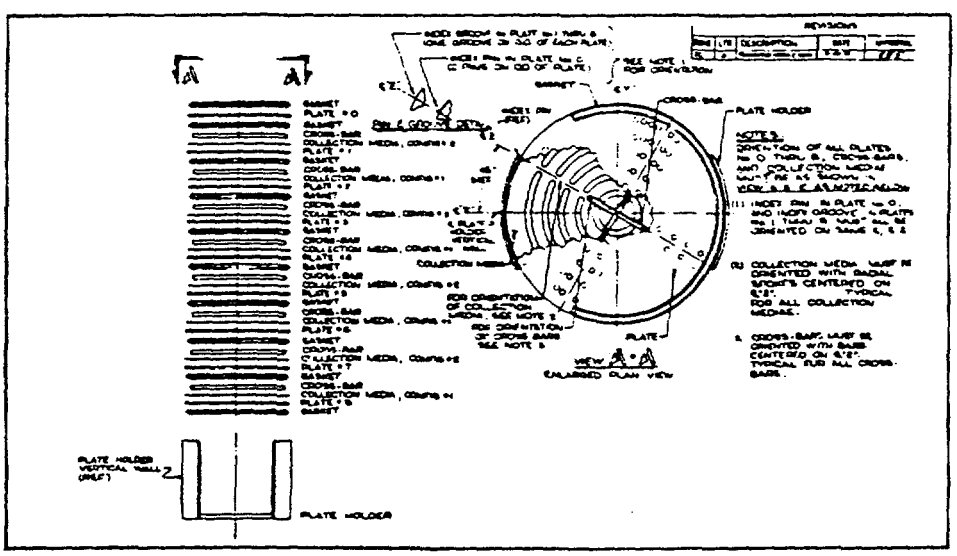

FIGURE 2
Shows glass fiber collection media with appropriate dimensions. In order to hold this media on the orifice-collection plates, stainless steel crossbars are used.

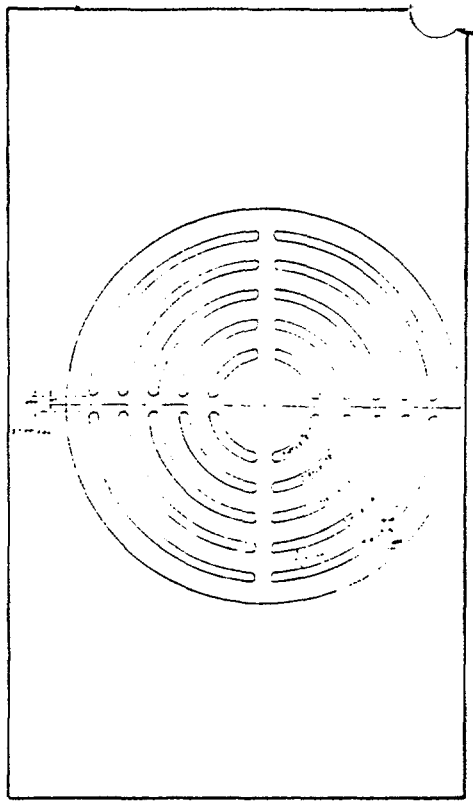

FIGURE 3

sary to use a backup filter always to ensure total collection.

Normally, whenever gravimetric analyses are to be performed, glass fiber collection media is used with the Mark III because of its non-hygroscopic properties. However, other collection substrates may be used if warranted by specific analytical requirements.

Since most particulates do have hygroscopic characteristics, all collection media used in the impactor should be preconditioned prior to weighing — both before and after a sampling cycle — in a desiccator.

For proper fractionation and sizing, the impactor should be operated at or below 0.75 ACFM. Since the bulk of the sample (on a weight basis) is normally collected in the fractionator, the flow rate will remain constant throughout the sampling period.

Normal sampling periods vary from a few minutes to several hours in heavy and light grain loading situations respectively. Ten milligrams of particulate matter on any one plate represents an approximate upper limit because of reentrainment problems. Overloading the sampler can be detected easily by visual inspection and occurs more often during the first test at an unfamiliar stack. Reentrainment is minimized by use of the preseparator.

After the sampling cycle has been completed, the sampler is disassembled (Figure 4). The collection media and plates are removed and then desiccated. After desiccating, the collection media can be weighed for net particulate accumulations, or the particulate matter can be extracted by an appropriate solvent and analyzed chemically for the various components of interest.

It should be noted that whenever a sample has been collected, the particle sizing has already been completed. To determine the nature of the size distribution, simply perform the required gravimetric and/or chemical analyses.

DATA PRESENTATION

To determine the concentration of particulates for any size range, first determine the percentage of total particles for each stage. Then the cumulative percentage is determined beginning with the last stage of the impactor (See Table II).

From Figure 5 it can be seen that approximately 84% of this hypothetical sample is respirable. More than 20% of the sample is submicron. By plotting the effective cutoff diameter (ECD) and the cumulative percent on logarithmic probability graph paper, then the particle concentration by weight for any specific size can be determined. (Figure 5).

TABLE II
TEMP. = 300° F

FLOW RATE (ACFM)	STAGE	TARE (g)*	FINAL (g)	NET (mg)	%	CUM % LESS THAN	ECD (microns)
0.6	0	0.1000	0.1060	6.00	12.0	88.0	13.6 and above
0.6	1	0.1000	0.1020	2.00	4.0	84.0	8.6
0.6	2	0.1000	0.1010	1.00	2.0	82.0	5.6
0.6	3	0.1000	0.1030	3.00	6.0	76.0	4.0
0.6	4	0.1000	0.1060	6.00	12.0	64.0	2.5
0.6	5	0.1000	0.1080	8.00	16.0	48.0	1.3
0.6	6	0.1000	0.1100	10.00	20.0	28.0	0.80
0.6	7	0.1000	0.1100	10.00	20.0	8.0	0.54
0.6	Backup filter	0.1100	0.1040	4.00	8.0	0	< 0.54
				50.00			

*NOTE: Collection substrates will seldom weigh exactly the same.

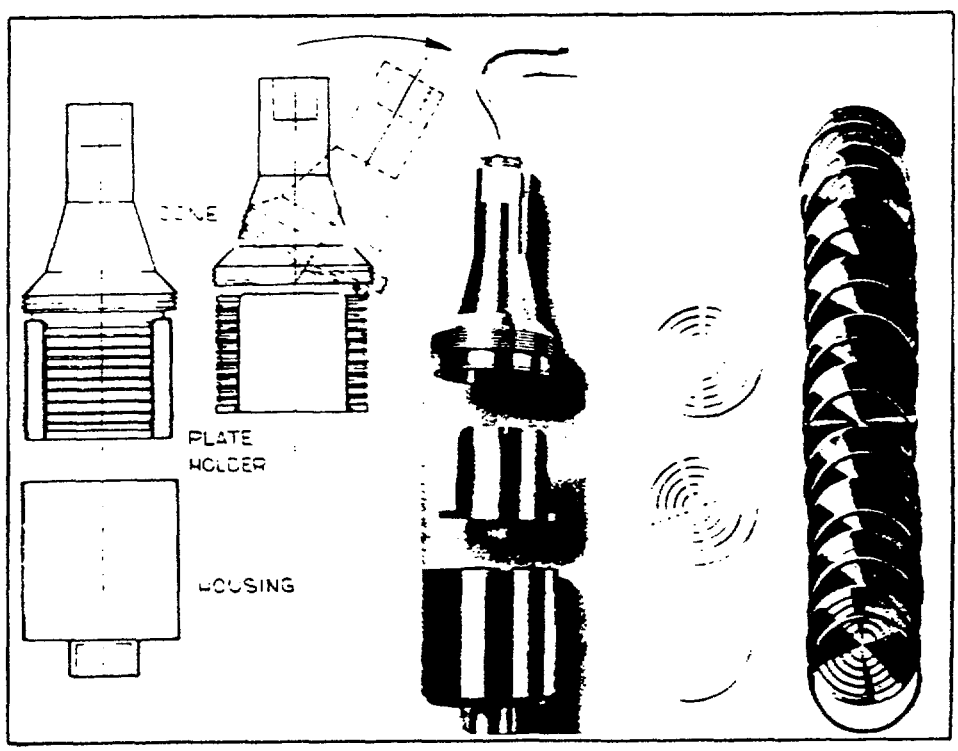

FIGURE 4

Company: _____

Application: _____

Particle Size Distribution Data:

FIGURE 5
PARTICLE SIZE DIAMETER

1. Source: _____
2. Method of Determination: _____
3. Data: _____

Particle Diameter (Microns)	Percent in Size Range	Cumulative Percent Less Than
13.6	12.0	88.0
8.6	4.0	84.0
5.6	2.0	82.0
4.0	6.0	76.0
2.5	12.0	64.0
1.3	16.0	48.0
0.8	20.0	28.0
0.54	20.0	8.0
0.54	8.0	0

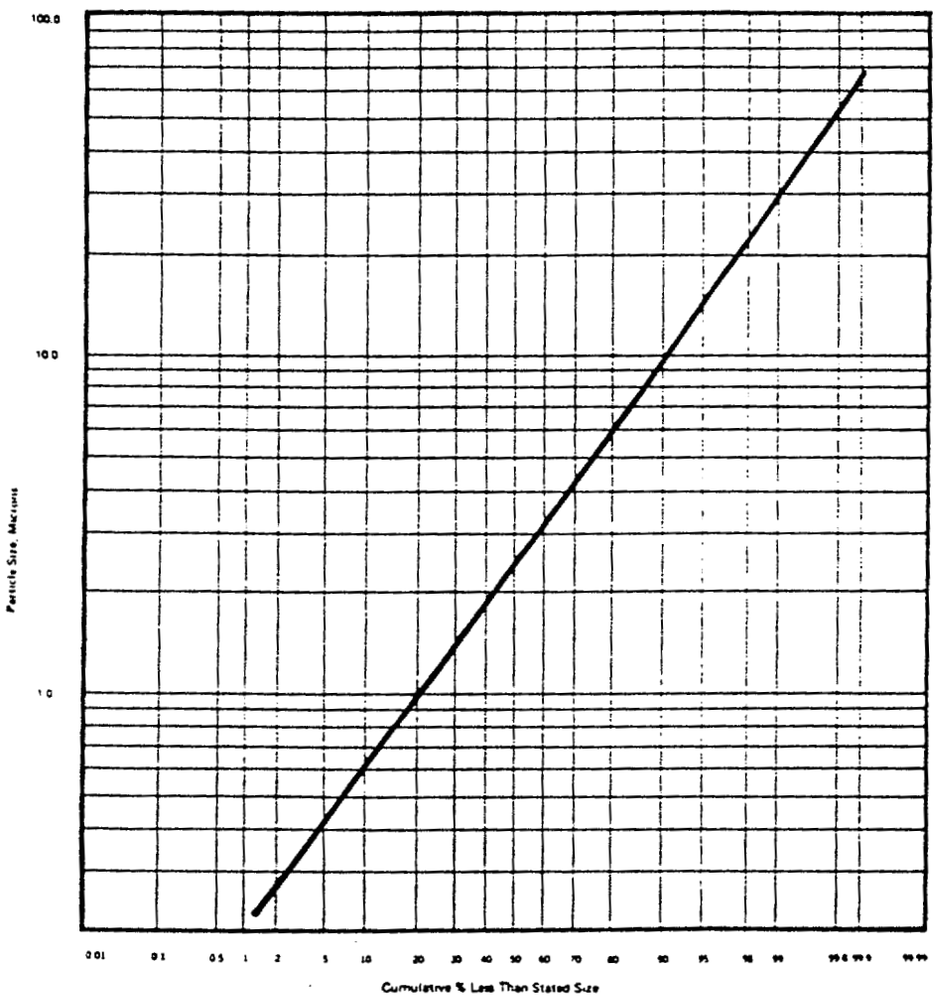

- ORDERING INFORMATION

Specify all units by full name and catalo number.

- OTHER SAMPLING EQUIPMENT

Andersen manufactures and supplies complete line of multi-orifice, mu stage impactors for sampling in a environmental areas in addition to a of air pollution control equipment. Wr or call the toll free number for details o other Andersen Equipment.

GRASEBY ANDERSEN

4801 FULTON IND. BLVD.
ATLANTA, GA 30336
(404) 691-1910
TOLL FREE: 800-241-6898

Bulletin 176-2

FILE

SEP - 8 1995

License No. SMB-743
Docket No. 040-07102

C. Scott Eves
Radiation Safety Officer
Shieldalloy Metallurgical Corporation
West Boulevard
P.O. Box 768
Newfield, NJ 08344

Dear Mr. Eves:

This is in reference to your letters dated March 14, 1995 and May 15, 1995 which indicate that you plan to adjust the Derived Air Concentration (DAC) for airborne thorium and uranium activity at your facility. In your proposed adjusted DAC, you take into account the measured particle size distributions and thorium and uranium to gross alpha ratios. In order to continue our review, we need the following additional information:

1. You are authorized to possess thorium and uranium in any form. In your analyses and calculations, you assign the thorium and uranium aerosol in the workplace to inhalation Class Y. Please state what forms of these materials you use and justification for using Class Y. A clarification of this point is necessary because, for example, the DAC for Class W is 50% lower than that for Class Y, and appropriate adjustments must be made depending upon the form that is used.

2. You used isotopic ratios to calculate the thorium and uranium activity from the results of gross alpha counting. This value is the ratio of the concentration of thorium and uranium activity to the total activity of alpha emitters in materials used at your facility, and was determined by isotopic analysis. You did not provide assurances that this ratio will reflect the ratio of emissions from the various alpha emitters in an air sample. This latter ratio may differ from that obtained by isotopic analysis because of the inaccuracies in determining counting efficiency such as self-absorption, geometry, and detector efficiency. Please provide a justification for using this scaling method based upon evidence that this ratio will reflect the ratio of emissions in an air sample.

3. You stated in your discussion of the analysis of the sampling results that the Activity Median Aerodynamic Diameter (AMAD) was calculated by calculating the mean particle size for the distribution. The correct quantity, however, is the median size. Please clarify this point by providing details on the method they used to calculate the AMAD.

4. In addition to our concerns regarding calculation of the AMAD, we also note that the Graseby/Anderson Model Mark III particle fractionating sampler that you used is susceptible to many errors that would result in nonrepresentative particle size distributions. These include changes in air flow rates, operating pressure, collection plate spacing, loss of sample due to movement of the sampler, calibration of the sampler, and other factors. The method is also subject to substantial errors due to particle bounce if proper precautions are not taken. The above concerns are heightened by the fact that data analysis was conducted offsite, thus involving transportation of the samples. Please describe the methods used to obtain the samples, the operating procedures for calibration and sampling, the precautions taken during transportation, the methods used to minimize particle bounce and their effects on alpha counting, and the qualifications of the person(s) who operated the sampler and shipped the samples for analysis. Error estimates for the activity determined for each stage should also be provided.

5. Please provide assurances that the air sampling data, particularly the particle size distribution data, is representative of the type of aerosols that workers are exposed to at each work location. Although some information was provided, it was insufficient to provide this assurance.

In order to approve an adjusted DAC, we must resolve the above concerns. Therefore, please submit your detailed discussions of how the above concerns were addressed.

We will continue our review upon receipt of this information. Please reply in duplicate to my attention at the Region I office. If you have any technical questions regarding this deficiency letter, please call Sheri A. Arredondo at (610) 337-5342.

Sincerely,

ORIGINAL SIGNED BY:
SHERYL VILLAR

for Mohamed M. Shanbaky, Chief
Research & Development Section
Nuclear Materials Safety Branch
Division of Radiation Safety
and Safeguards

License No. SMB-743
Docket No. 040-07102

cc: State of New Jersey

SHIELDALLOY METALLURGICAL CORPORATION

WEST BOULEVARD
P.O. BOX 768
NEWFIELD, NJ 08344
TELEPHONE (609) 692-4200
FAX (609) 692-4017

May 15, 1995

MESSAGE NO. 95-0134

NO. OF PAGES INCLUDING THIS COVER 27
If you do not receive the number of pages indicated
or find they are illegible, please contact
Darlene Giannascoli at (609)692-4200 Ext. 348.

TO: Mr. Thomas Martin - USNRC Regional Administrator

FROM: C. Scott Eves

CC: HNS, Carol Berger

SUBJECT: Confirmatory Action Letter Response

MESSAGE:

Dear Mr. Martin:

Accompanying this facsimile is Shieldalloy Metallurgical Corporation's response to Confirmatory Action Letter No. 1-95-004. The original is being sent via Certified Mail.

SHIELDALLOY METALLURGICAL CORPORATION

WEST BOULEVARD
P.O. BOX 768
NEWFIELD, NJ 08344
TELEPHONE (609) 692-4200
FAX (609) 692-4017

May 15, 1995

Mr. Thomas T. Martin, Regional Administrator
United States Nuclear Regulatory Commission
475 Allendale Road
King of Prussia, Pennsylvania 19406

Re: Confirmatory Action Letter No. 1-95-004

Dear Mr. Martin:

As set forth in the Confirmatory Action Letter No. 1-95-004 (CAL-1-95-004), the purpose of this letter is to transmit a status report on Shieldalloy Metallurgical Corporation's (SMC) actions in response to CAL-1-95-004. Attached is a summary of agreed-upon items and the action taken to date. Changes since the March 14, 1995 status report are indicated by margin bars.

All of the actions addressed in CAL-1-95-004 are now complete. Please contact me or Mr. Eves at (609) 692-4200 if you have any questions or if we can provide you with additional information.

Sincerely,

H. Nils Schooley
President

C. Scott Eves, RSO
Vice President, Environmental Services

cc: Ken Pugh

SHIELDALLOY METALLURGICAL CORPORATION
STATUS REPORT FOR
CONFIRMATORY ACTION LETTER NO. 1-95-0048

May 12, 1995

Item 1: Perform an evaluation of workers' intakes of thorium and uranium and determine the occupational doses for all potentially exposed workers, as required by 10 CFR 20.1501. These dose assessments will be based on accurate and validated thorium to alpha ratios, exposure times and air sampling data.

Action (Determination of Isotope-to-Gross Alpha Ratios): As part of the inventory control program, the concentration of all radioactive materials in pyrochlore (the feed material for ferrocolumbium production) is measured on a quarterly basis.[1] Also, as part of the CANAL processing operation, the concentration of the parent and daughter radionuclides in ferrocolumbium slag was measured.[2] All of the measurement results confirm that the parents and the daughters in the pyrochlore and in the slag are in equilibrium. Therefore, the yield-corrected alpha activities of each daughter present in the sample during analysis can be used to determine the thorium-to-gross alpha ratio in the materials. This analysis reveals a mean ratio of 0.076 $\pm$ 0.011. Likewise, the mean uranium-to-gross alpha ratio is 0.061 $\pm$ 0.007. Attachment 1 of the March 14, 1995 status report showed the data from which this ratio was determined.

Action (Evaluation of Worker Stay Time for 1994): An evaluation of each ferrocolumbium production worker's "stay time" was performed.[3] This evaluation, which included a review of time card information and production logs, revealed that the mean stay time for ferrocolumbium production personnel is 939 $\pm$ 917 hours per year. The maximum value was 2478 hours, and the minimum value was 12 hours. A review of the production logs revealed that ferrocolumbium was produced for 236 shifts in 1994. Cleanup and furnace repairs involving source material were performed for an additional 33 shifts. However, some of those activities, which are

---

1 See TMA/E Report of Analysis dated 9/19/94, Teledyne Report of Analysis dated 6/14/94, Teledyne Report of Analysis dated 6/30/94, and TMA/E Report of Analysis dated 10/17/94.

2 See letter from C. D. Berger, Integrated Environmental Management, Inc., to C. Scott Eves, Shieldalloy Metallurgical Corporation, "Slag Sampling Program Summary", October 3, 1994.

3 See memo from David R. Smith, Shieldalloy Metallurgical Corporation, to Carol D. Berger, Integrated Environmental Management, "D.111 Employee Work Hours for CY 94", February 28, 1995, and memo from David R. Smith, Shieldalloy Metallurgical Corporation, to Carol D. Berger, Integrated Environmental Management, Inc., "D.111 Job Assignment and Duration for (employee name) and (employee name)", March 9, 1995.

normally performed during the night shift, occurred during the day shift for a brief period in 1994.

Action (Dose Assessment for 1994): Based upon area air monitoring, individual breathing zone sampling, individual time card data, and personnel dosimetry results, the Committed Dose Equivalent (CDE) to the Bone Surfaces and the Total Effective Dose Equivalent (TEDE) for the entire year was determined for all monitored personnel. Attachment 2 of the March 14, 1995 status report contained a listing of results.[4] In this attachment, the "Quarterly Work Hrs in D.111" were determined by dividing the annual work hours from time card data by four (4). The "Clock No." shown on the attachment is SMC's designation for Employee Number. The "Mean BZA" results shown on the attachment were determined by:

$$Mean\ BZA = \frac{\sum_i M_i}{n}$$

where M = gross alpha activity on filter "I" for the individual, and n = the total number of measurements performed over the quarter for that individual.[5] Finally, the DAC-hours shown on the attachment were determined by:

$$DAC\text{-}hrs = \sum_i \left[\frac{Mean\ BZA \times R_i}{DAC_i} \times T \right]$$

where "Mean BZA" is as described above, R = the isotopic ratio for isotope "I" (e.g., ^{232}Th or ^{238}U), and DAC = the Derived Air Concentration for isotope "I", taken from 10 CFR 20, Appendix B. For those employees spending time in D.111 during a particular quarter, who were not monitored during that quarter, the "Mean BZA" value for the quarter in question was taken to be the average "Mean BZA" value for 1994 (i.e., 1.66×10^{-12} μCi gross α per ml).

Current Status: Closed.

Item 2: Perform an evaluation of doses for potentially exposed members of the public that may receive the highest whole body exposure in the unrestricted area surrounding your facility, as required by 10 CFR 20.1501.

Action (Evaluation of Emissions from D.111): A consultant has been retained to evaluate the means by which emissions from the two baghouses in D.111 can be

---

4 The values listed in Attachment 2 of the March 14, 1995 status report are still considered to be over-estimates of the true doses incurred by these individuals for the reasons listed in therein.

5 With only two exceptions, the monitored employees had only one or two measurement points per quarter. The two exceptions, Clock No. 1717 and 1257, had 10 and seven (7) measurement points, respectively, for Quarter 1.

effectively measured.[6] The consultant's on-site assessment took place on Thursday, March 9, 1995. The consultant's draft report was received on March 28, 1995, and reviewed by SMC. A request for additional information was forwarded to the consultant on April 19, 1995, and a second draft of the report was delivered on May 3, 1995. This document is currently under review. The final report from the air consultant regarding specific measurement locations for the two baghouses is anticipated by May 16, 1994. The Radiation Safety Committee will meet after receipt of the consultant's report to evaluate the findings and implement applicable recommendations.

Action (Off-site Population Dose Estimation for 1994): In 1993, Shieldalloy evaluated the airborne emissions from the Newfield plant in a report entitled "Radiation Dose Estimates for Members of the General Public at the Newfield New Jersey Facility".[7] In that report, emissions from the D.111 baghouses and radon emanation rates from the materials in the Storage Yard were estimated. From this information, the maximum individual off-site dose was calculated using the CAP88-PC computer code. Conservative assumptions were made as input to the code when site-specific information was not available. This analysis demonstrated that the maximum annual radiation dose from particulate emissions (0.22 millirem CEDE) occurred 300 meters East Southeast of the D.111 stack. Likewise, the maximum annual radiation dose from radon (0.009 millirem CEDE) occurred 50 meters East Southeast of the Storage Yard.[8]

As part of its radiation protection program, Shieldalloy deploys environmental dosimeters (TLDs) at various locations on the perimeter fence of the Newfield facility. These are used to estimate the external component of the off-site population dose. In 1994, each TLD remained in place for approximately one quarter, at which time they were retrieved, processed, and the doses were recorded. New dosimeter assemblies were deployed at the time of collection of those that were previously deployed.

The 1994 TLD data demonstrate that the maximum measured perimeter exposure rate occurred due north of the Storage Yard, at a distance of about 30 feet from the slag piles (Station 6).[9] However, ambient exposure rates measured during an

---

6 APEX Environmental, Inc., Oak Ridge, Tennessee provided the consultant.

7 IT Corporation, "Radiation Dose Estimates for Members of the General Public at the Newfield, New Jersey Facility", IT Corporation Report No. IT/NS-93-107, February 16, 1993.

8 Ferrocolumbium production procedures in 1994 did not differ from those of 1993. Therefore, the findings of this 1993 analysis are assumed to be representative, and were used to determine 1994 population doses pursuant to 10 CFR 20.1301.

9 A closed municipal landfill abuts the north boundary of the Shieldalloy property at this location.

environmental assessment indicated that this exposure rate drops by a factor of five at a distance of about 30 feet from the boundary fence.[10] The other area where the TLD data show elevated exposure rates is directly south of the slag piles on the fence line (Stations 10, 11, and 12). To the south of the slag piles, the closest residence is over 85 feet south of the property line. This, in turn, is approximately 250 feet south of the location of the TLDs. The ambient gamma exposure rate at this location is not discernible from background.

There are only three potential exposure scenarios for members of the general public. They involve (1) constant and continuous presence at the south fenceline; (2) periodic presence (e.g., less than one hour per week) at any randomly-selected location around the perimeter fence; or (3) periodic presence (e.g., less than one hour per month) only at Station 6, which is the location of maximum measured exposure.[11] Since the perimeter fence line is patrolled regularly by a security guard, these scenarios are unlikely. Nonetheless, the maximum possible annual exposure of a member of the general public for each of these scenarios, including the maximum dose contribution from particulate and radon emissions, is 0.23, 2.15 and 3.43 millirem, respectively. These values, which over-estimate the true dose that may be incurred by any single individual, are well-below the 100 millirem per year limit specified in 10 CFR 20.

Current Status: Closed.

Item 3: Immediately following the completion of the above dose assessments, implement interim ALARA measures to minimize workers' thorium and uranium intakes. A comprehensive ALARA program showing your long term plans with documented procedures, equipment, engineering controls, and personnel training will be submitted.

Action Taken: A standard operating procedure entitled "ALARA Program" was drafted and has been reviewed by the Radiation Safety Committee. This procedure, which describes the Shieldalloy ALARA program, is enclosed as Attachment 1.

Action Taken: Ferrocolumbium and CANAL production operations are presumed to generate primarily large (e.g., greater than one micrometer AMAD) particles. To improve interpretation of air sampling results in the vicinity of these operations, the particle size distribution was measured using a Graseby/Andersen Model Mark III

---

10 IT Corporation, "Assessment of Environmental Radiological Conditions at the Newfield Facility", IT Corporation Report No. IT/NS-92-106, April 1, 1992.

11 A stay-time of one hour per month at this location is conservative in that there is no physical evidence that individuals frequent this area. Furthermore, monitored Shieldalloy employees who frequent the area for durations greatly in excess of one hour per month, incurred exposures that were only slightly above the detection limits of the dosimetry system.

Particle Fractionating Sampler. Three samples were collected during the trial CANAL crushing operation. The results of these analyses, shown in Attachment 3 of the March 14, 1995 status report, indicated mean particle sizes of 8.65, 7.90 and 8.04 micrometers AMAD.

Action Taken: Cascade impactor samples were collected during ferrocolumbium production (second floor of D.111) beginning on February 16, 1995. Sample collection in the vicinity of the pyrochlore mixing process (first floor of D.111) began on March 5, 1995. These filters were forwarded to the laboratory for analysis and the results, shown in Attachment 2, indicate mean particle sizes of 2.03 micrometers AMAD in the vicinity of the pyrochlore mixing process, and 1.79 micrometers AMAD on the second floor of D.111.

Action Taken: From the particle size analysis of ferrocolumbium production operations, and using the methodologies promulgated by the International Commission on Radiological Protection (ICRP 30), the Derived Air Concentrations used to assess personnel exposures for Item 1, above, may be adjusted to account for site-specific particle size information. Attachment 3 shows the results of this re-evaluation.

From ICRP Publication 30, the following equation expresses the adjustment to the committed dose equivalent in terms of the changed deposition in the different lung compartments as a results of particle size changes:

$$\frac{H_{50}(2\ \mu m)}{H_{50}(1\ \mu m)} = f_{N-P}\frac{D_{N-P}(2\ \mu m)}{D_{N-P}(1\ \mu m)} + f_{T-B}\frac{D_{T-B}(2\ \mu m)}{D_{T-B}(1\ \mu m)} + f_{P}\frac{D_{P}(2\ \mu m)}{D_{P}(1\ \mu m)}$$

where f_{N-P}, f_{T-B}, and f_P are fractions of the committed dose equivalents in the reference tissues resulting from deposition in the nasal passages (N-P), trachea and bronchial tree (T-B) and pulmonary parenchyma (P) regions, and D_{N-P}, D_{T-B}, and D_P are the fractions of inhaled material initially deposited in the three compartments of the lung. These fractions can be found in ICRP Publication 30 and in computer codes like DFINT.[12]

From the adjusted committed dose equivalent per unit intake, an adjusted Annual Limit on Intake (ALI) is determined by:

$$ALI\ (2\ \mu m) = \frac{0.5\ Sv}{H_{50,T}\frac{Sv}{Bq}}$$

From the ALI, the adjusted DAC is determined by:

12 Eckerman, K. F., DFINT, Version 4.0, June 19, 1993, Oak Ridge, Tennessee.

$$DAC\ (2\ \mu m) = \frac{ALI}{2.4\times10^{3}}\ Bq/m^{3}$$

Action Taken: The first quarter, 1995 surveillance results, including the results of breathing zone sampling and external exposure rate measurements, were reviewed by the Radiation Safety Committee on May 10, 1995. As an initial ALARA measure, it was determined that CANAL crushing/packaging operations would henceforth be performed inside of D.111 in order to take advantage of its dust handling system. These operations began on April 12, 1995.[13]

Action Taken: A written statement indicating senior management commitment to the ALARA concept was finalized, signed, and posted in appropriate locations within the plant on May 15, 1995 (See Attachment 4). Personnel training in the provisions of the ALARA program was completed on February 20, 1995.

Current Status: Closed.

[13] In light of changes in the ferrocolumbium production schedule, and a pending increase in CANAL sales, the SMC Radiation Protection Program Plan is scheduled for review and modification to ensure applicability to anticipated operational demands. Once finalized, the Radiation Safety Committee and the RSO will issue approved standard operating procedures for radiation protection.

ATTACHMENT 1
DESCRIPTION OF THE ALARA PROGRAM

STANDARD OPERATING PROCEDURES

ALARA PROGRAM

Minor change	SOP NO:
Number:	Rev No: 001
By:	Date: 4-12-95
Date: / / /	Page 1 of 11
Approved by RSC 5/12/95	

1 PURPOSE

1.1 This procedure describes the Shieldalloy ALARA (as low as reasonably achievable) program regarding exposure to ionizing radiation and radioactive material. This procedure is applicable to all Shieldalloy operations, activities, and personnel at the Newfield Site.

1.2 Responsibilities:

1.2.1 The Director Shall:

1.2.1.1 Ensure that plant personnel are aware and supportive of management's commitment to keep occupational radiation exposures ALARA.

1.2.1.2 Review program audit findings in order to determine how exposures might be reduced.

1.2.1.3 Ensure that workers are trained in radiation protection practices.

1.2.1.4 Ensure that revisions to operating and maintenance procedures, and modifications to plant equipment and facilities are made if they will substantially reduce exposure at a reasonable cost.

1.2.1.5 Ensure that the authority for providing procedures designed to meet ALARA goals is properly delegated.

1.2.1.6 Ensure that the resources needed to achieve ALARA goal are made available to the RSO and RSC.

1.2.2 The Radiation Safety Officer (RSO) Shall:

1.2.2.1 Perform radiological surveys in order to provide comprehensive and current information on the radiological status of Shieldalloy facilities and equipment.

1.2.2.2 Ensure that posting and labeling is appropriate and commensurate with the hazards.

1.2.2.3 Provide appropriate radiation protection information when required.

1.2.2.4 Ensure that radiation monitoring and surveillance instruments are functional, calibrated, and available in adequate quantities to perform both routine and emergency tasks.

1.2.2.5 Provide the listing of ALARA goals to the Radiation Safety Committee for consideration.

1.2.3 The Radiation Safety Committee (RSC) shall review, recommend, and approve ALARA goals at a frequency of not less than once per calendar year.

1.2.4 Shieldalloy personnel shall:

1.2.4.1 Plan work in controlled and restricted areas in order to minimize exposures.

1.2.4.2 Follow the basic radiation protection principles of "time", "distance" and "shielding" whenever possible.

1.2.4.3 Comply with the instructions given by the RSO.

1.2.4.4 Obtain special briefings when advised by the RSO.

1.2.4.5 Comply with the listing of individual worker responsibility for ALARA as contained in Attachment 1.

2. SCOPE

2.1 This procedure applies to all Shieldalloy employees, visitors, and contractors at the Newfield Site.

STANDARD OPERATING PROCEDURES

ALARA PROGRAM

3. REFERENCES

3.1. Title 10, Code of Federal Regulations, Part 20, "Standards for Protection against Radiation"

3.2 U.S. Nuclear Regulatory Commission License No:SMB-743

3.3 USNRC Regulatory Guide 8.8, "Information Relevant to Ensuring that Occupational Radiation Exposure's at Nuclear Power Stations will be as Low as Reasonably Achievable," June 1978.

4. DEFINITIONS

4.1. ALARA -Acronym for "As Low As Reasonably Achievable", a basic concept of radiation protection that specifies that radiation exposures should be maintained as low as is reasonably achievable taking into account technological, economical, and societal considerations.

4.2 Approval- An act of endorsing or adding positive authorization or both.

4.3 Authorized User - Employee who supervises the use of radioactive material; and who supervise individual's who work with radioactive materials. Authorized users are qualified, by training and experience, to ensure radioactive materials are used for their intended purpose and in a manner that protects health and minimizes danger to life or property.

4.4 Contamination Area - Any area accessible to personnel where there exists fixed and/or removable source material contamination in excess of the limits established for unrestricted access.

4.5 Controlled Area - Any area to which access is controlled in order to protect individual's from exposure to radiation and radioactive materials. (The controlled area at Shieldalloy consists of the entire area within the fence line.)

STANDARD OPERATING PROCEDURES

ALARA PROGRAM

4.6 Director - Designated senior manager of Shieldalloy Metallurgical Corporation with the authority to commit Shieldalloy resources for radiation protection purposes.

4.7 May - The word *may* is used to denote permission.

4.8 Pocket Ionization Chambers (PIC) - A self indicating, dose integrating device which is considered to be a "secondary" dosimetry device.

4.9 Radiation Safety Officer (RSO) - An individual who, by virtue of qualifications and experience, has been given the authority to implement the Shieldalloy Radiation Protection Program Plan. The RSO is qualified to use source material for its intended purpose in a manner that protects health and minimizes danger to life and property. The RSO is responsible for recognizing potential radiological hazards, developing a radiation safety program to protect against these hazards, training workers in safe work practices, and supervising day-to-day radiation safety operations.

4.10 Restricted Area - An area within the controlled area to which access is limited for the purpose of protecting individuals against undue risks from exposure to radiation and radioactive materials.

4.11 Shall - The word *shall* is to be understood as a requirement.

4.12 Should - The word *should* is to be understood as a recommendation.

4.13 Thermoluminescent Dosimeter (TLD) - The thermoluminescense phosphor(s) used for determining external radiation exposure to beta, gamma, x-rays, and neutrons. The word TLD and dosimeter are used interchangeably throughout this procedure.

STANDARD OPERATING PROCEDURES

ALARA PROGRAM

Minor Change	SOP No:
Number:	Rev. No: 001
By:	Date: 4-12-95
Date: / /	Page 5 of 11
Approved by RSC 5/12/95	

5. PROCEDURES

5.1 ALARA Objectives

5.1.1 To establish a program for maintaining occupational radiation doses ALARA;

5.1.2 To design facilities and select equipment using ALARA concepts;

5.1.3 To establish radiation controls in the program, plans and procedures, and;

5.1.4 To make available supporting equipment, instrumentation, and facilities.

5.2. Program for Maintaining Personnel Radiation Doses ALARA

5.2.1 A formal management policy and commitment to ALARA shall be established.

5.2.2 Responsibility and authority for the programs shall be clearly delegated by the Director.

5.2.3 A training program in the fundamentals of radiation protection and ALARA procedures shall be established. (Shieldalloy has established an effective program which addresses these topics.)

5.3 Designing Facilities and Selecting Equipment using ALARA Concepts

5.3.1 Whenever applicable, the design of facilities and selection of equipment shall be based upon ALARA concepts.

5.3.2 These reviews shall be conducted by the RSC.

5.3.3 Reviews shall be based upon the work using the guidance of Regulatory Guide 8.8, Section 2.

5.4 Establishing Radiation Controls

5.4.1 Radiation controls shall be established for work operations to ensure radiation exposures are ALARA, and should be included in:

5.4.1.1 Work planning and preparation,

5.4.1.2 Actual work operations, and

5.4.1.3 Post operation reviews.

5.4.2 The specific requirements for implementing radiation controls shall be described in job procedures and/or work plans.

5.5 Supporting Equipment, Instrumentation, and Facilities

5.5.1 Appropriate support equipment, instrumentation , and facilities shall be provided for all Shieldalloy work involving ionizing radiation.

5.5.2 Support may include:

A. A radiation counting area

B. Radiation Survey instrumentation (portable and nonportable)

C. Personnel monitoring devices

D. Protective clothing

STANDARD OPERATING PROCEDURES

ALARA PROGRAM

E. Decontamination areas for personnel and equipment

F. Dedicated change rooms

G. Communication equipment

H. Office Space and equipment

5.6 ALARA Goals

5.6.1. The RSC shall establish radiological goals to direct all levels of management and workers at Shieldalloy toward improvement in radiological performance.

5.6.2 ALARA goals shall be established, reviewed, and documented at a frequency of no less than once per calendar year.

5.6.3. Typical quantitative goals may include reducing, as applicable:

5.6.3.1 Maximum dose to on-site and off-site individuals.

5.6.3.2 Number of individuals with confirmed intakes of radioactive material.

5.6.3.3 Number of individuals that become externally contaminated.

5.6.3.4 Number of contamination incidents.

5.6.3.5 Square footage of contaminated areas.

5.6.3.6 Number of radiological incident reports.

STANDARD OPERATING PROCEDURES

ALARA PROGRAM

5.6.4 The following steps for establishing ALARA goal shall be included in the goal-setting process:

5.6.4.1 The RSC, with input from the RSO, and outside expertise as required shall review existing data to determine where establishing specific goals is appropriate.

5.6.4.2 The RSC shall evaluate the existing condition(s), root cause(s), and corrective action(s).

5.6.4.3 The RSC shall determine the improvement needed and propose the goal.

5.6.4.4 The RSC shall assign and implement action plans.

5.6.4.5 The RSC shall periodically review performance in archieving the goal and modify the action plan, if necessary.

5.6.4.6 The RSO shall document radiological goals, their status, and performance, and shall present them to the RSC at planned and periodic meetings.

6. DOCUMENTATION

6.1 All records pertinent to this procedure shall be maintained by the RSO.

6.2 The minutes of the RSC meetings shall reflect RSC action in establishing and monitoring ALARA goals.

STANDARD OPERATING PROCEDURES

ALARA PROGRAM

7. ATTACHMENTS

7.1 Attachment 1: Individual Worker's Responsibilities for ALARA

ATTACHMENT 1

INDIVIDUAL WORKER'S RESPONSIBILITIES FOR ALARA

1. Obey promptly "stop work" and "evacuate" instructions of RSO.

2. Follow all procedures and instructions.

3. Wear TLD's and pocket ionization chambers (PIC) as required by procedures and instructions, signs, or the RSO.

4. Maintain an awareness of your own radiation dose status through requesting records from the RSO, and avoid exceeding dose control levels and limits.

5. Remain in as low a radiation area as practical to accomplish work.

6. Leave radiation areas or airborne radioactivity areas when not working, and use "wait areas" when designated.

7. **DO NOT** smoke, eat, drink, or chew in radiologically restricted areas, or bring smoking, eating, drinking, or chewing materials into such area.

8. Wear approved protective clothing (Tyvek) and respirators properly whenever required.

9. Remove protective clothing and respirators properly to minimize contamination.

10. Under unusual circumstances be frisked for contamination as directed when leaving contamination zones and radiologically controlled areas.

11. Minimize the spread of a known or possible radioactive spill and notify radiation protection personnel promptly.

12. Avoid unnecessary contact with contaminated surfaces, including your protective clothing, tools and other equipment.

13. Control the amount of tools, equipment and personal belongings brought into radiologically controlled area.

continued

14. Limit the amount of material that has to be decontaminated or disposed of as radioactive waste.

15. Report the presence of treated or open wounds to the RSO before work in areas where radioactive contamination exists; and exit promptly if a wound occurs while in such area.

16. Report promptly unsafe or noncompliance situations to the RSO or Authorized User.

17. Report prior or concurrent occupational radiation exposure to the RSO.

18 Report pregnancy in accordance with Shieldalloy procedures and instructions.

ATTACHMENT 2
PARTICLE SIZE DATA FROM D.111 OPERATIONS

Location	Stage	Effective Cut Diameter (microns)	Total Activity (pCi)	Percent of Total Activity	Cumulative (Percent Less Than)
Vicinity of scale, 10 feet from hopper	0	13.6 and above	5.90	8.81	91.19
	1	8.6	3.76	5.61	85.58
	2	5.6	2.94	4.39	81.19
	3	4.0	5.5	8.21	72.98
	4	2.5	11.0	16.42	56.55
	5	1.3	10.6	15.83	40.73
	6	1.8	17.7	26.43	14.3
	7	.54	6.1	9.11	5.2
	Final	Less than 0.54	3.48	5.2	0
		TOTAL	66.98		
Vicinity of scale, 10 feet from hopper	0	13.6 and above	3.37	9.2	90.80
	1	8.6	3.17	8.65	82.15
	2	5.6	2.21	6.03	76.11
	3	4.0	2.48	6.77	69.34
	4	2.5	3.00	8.19	61.15
	5	1.3	5.20	14.20	46.96
	6	1.8	5.50	15.02	31.94
	7	.54	5.70	15.56	16.38
	Final	Less than 0.54	6.00	16.38	0
		TOTAL	36.63		
Vicinity of scale, 10 feet from hopper	0	13.6 and above	3.93	13.18	86.82

Location	Stage	Effective Cut Diameter (microns)	Total Activity (pCi)	Percent of Total Activity	Cumulative (Percent Less Than)
	1	8.6	2.71	9.09	77.73
	2	5.6	3.42	11.47	66.25
	3	4.0	2.76	9.26	56.99
	4	2.5	2.34	7.85	49.14
	5	1.3	3.26	10.94	38.21
	6	1.8	2.66	8.92	29.29
	7	.54	3.03	10.16	19.12
	Final	Less than 0.54	5.70	19.12	0
		TOTAL	29.81		
Outside entrance to control room on second floor.	0	13.6 and above	4.60	9.21	90.79
	1	8.6	5.70	11.41	79.38
	2	5.6	3.02	6.05	73.33
	3	4.0	4.10	8.21	65.13
	4	2.5	3.47	6.95	58.18
	5	1.3	5.40	10.81	47.37
	6	1.8	3.09	6.19	41.18
	7	.54	3.47	6.95	34.23
	Final	Less than 0.54	17.1	34.23	0
		TOTAL	49.95		
Outside entrance to control room on second floor.	0	13.6 and above	190.0	39.6	60.4
	1	8.6	13.6	2.83	57.57
	2	5.6	9	1.88	55.69
	3	4.0	12.4	2.58	53.11

Location	Stage	Effective Cut Diameter (microns)	Total Activity (pCi)	Percent of Total Activity	Cumulative (Percent Less Than)
	4	2.5	8.3	1.73	51.38
	5	1.3	19.8	4.13	47.25
	6	1.8	32.5	6.77	40.48
	7	.54	42.2	8.8	31.68
	Final	Less than 0.54	152.0	21.68	0
		TOTAL	479.8		

ATTACHMENT 3
REVISED 1994 TEDE REPORT

SHIELDALLOY METALLURGICAL CORPORATION - 1994 TEDE REPORT

Clock	Quarterly	Mean				TLD				Th-232				Th-232				U-238					
	Work Hrs	BZA (uCi/ml)				mr				DAC-hrs (NS)				DAC-hrs (S)				DAC-hrs (S)				CDE(BS)	TEDE
No.	in D111	Q1	Q2	Q3	Q4	Q1	Q2	Q3	Q4	Q1	Q2	Q3	Q4	Q1	Q2	Q3	Q4	Q1	Q2	Q3	Q4	Rem	Rem
1448	3	1.80E-12								0.32	0.28	0.28	0.28	0.22	0.19	0.19	0.19	0.02	0.02	0.02	0.02	0.029	0.002
1717	539.25	2.32E-12				18	17	17	14.5	70.96	50.90	50.90	50.90	47.30	33.93	33.93	33.93	3.82	2.74	2.74	2.74	9.619	0.469
1888	433.75	1.03E-12	1.15E-12		1.10E-12			12	0	25.27	40.94	40.94	27.06	16.85	18.86	27.29	18.04	1.36	1.52	2.20	1.46	5.545	0.231
1257	526.75	1.10E-12	1.20E-12		8.40E-13	0	0	14	0	32.86	35.85	49.72	25.10	21.91	23.90	33.15	16.73	1.77	1.93	2.67	1.35	6.173	0.273
1935	11	1.56E-12								0.97	1.04	1.04	1.04	0.64	0.69	0.69	0.69	0.05	0.06	0.06	0.06	0.176	0.007
1589	112.25		1.10E-12			0	0	0	0	10.59	7.00	10.59	10.59	7.06	4.67	7.06	7.06	0.57	0.38	0.57	0.57	1.668	0.070
1737	80.25				2.33E-12			0	0	7.57	7.57	7.57	10.59	5.05	5.05	5.05	7.06	0.41	0.41	0.41	0.57	1.433	0.060
1800	121.25				1.75E-12			0	6.6	11.44	11.44	11.44	12.05	7.63	7.63	7.63	8.03	0.62	0.62	0.62	0.65	1.995	0.090
1727	157.75				1.80E-12	0	0	0	0	14.89	14.89	14.89	16.10	9.93	9.93	9.93	10.74	0.80	0.80	0.80	0.87	2.614	0.109
1996	10				5.80E-12					0.94	0.94	0.94	3.28	0.63	0.63	0.63	2.19	0.05	0.05	0.05	0.18	0.263	0.011
1841	203.5				1.00E-12			0	0	19.21	19.21	19.21	11.54	12.81	12.81	12.81	7.69	1.03	1.03	1.03	0.62	2.975	0.125
1548	619.5				6.60E-13	19	0	10	10	58.47	58.47	58.47	23.19	38.98	38.98	38.98	15.46	3.14	3.14	3.14	1.25	8.542	0.397
0760	0					0	0	0	0	0.00	0.00	0.00	0.00	0.00	0.00	0.00	0.00	0.00	0.00	0.00	0.00	0.000	0.000
1473	0									0.00	0.00	0.00	0.00	0.00	0.00	0.00	0.00	0.00	0.00	0.00	0.00	0.000	0.000
1092	0					0	0	0	0	0.00	0.00	0.00	0.00	0.00	0.00	0.00	0.00	0.00	0.00	0.00	0.00	0.000	0.000
1083	0						0	0	0	0.00	0.00	0.00	0.00	0.00	0.00	0.00	0.00	0.00	0.00	0.00	0.00	0.000	0.000
6508	0					0	0	0	0	0.00	0.00	0.00	0.00	0.00	0.00	0.00	0.00	0.00	0.00	0.00	0.00	0.000	0.000
1965	0							0	0	0.00	0.00	0.00	0.00	0.00	0.00	0.00	0.00	0.00	0.00	0.00	0.00	0.000	0.000
1700	0							0	0	0.00	0.00	0.00	0.00	0.00	0.00	0.00	0.00	0.00	0.00	0.00	0.00	0.000	0.000

ATTACHMENT 4
MANAGEMENT POLICY STATEMENT ON RADIATION PROTECTION

MANAGEMENT POLICY STATEMENT ON RADIATION PROTECTION

Shieldalloy Metallurgical Corporation (SMC) has the responsibility for providing a work-place environment in which employees, visitors and contractors are adequately protected from hazards, including the hazards associated with exposure to radiation and radioactive material. At SMC, some individuals, by nature of their work, will be exposed to these hazards to varying degrees.

While the majority of occupational radiation exposures are low, all exposures are assumed to entail some risk to the employee. Therefore, SMC has adopted the following three principles to govern all work activities with the potential for exposure to radiation or radioactive materials:

1. No activity or operation will be conducted unless its performance will produce a net positive benefit.

2. All radiation exposures will be kept as low as reasonably achievable (ALARA) considering economic and societal costs.

3. No individual will receive radiation doses in excess of federal limits.

The first principle is self-explanatory. SMC personnel will not be exposed to radiological hazards unless there is some benefit to be gained from the activity involving the exposure. The third principle is also self-explanatory. Federal authorities and SMC management have identified an upper limit on radiation doses to which workers may be exposed without incurring unacceptable risks. The second principle, ALARA, is the basis for much of our radiation protection program, other than demonstrating compliance with regulations. ALARA is an operating policy that is integrated into each of our Radiation Safety Procedures.

Incorporated into the SMC radiation protection policy are the following goals:

1. Individual exposures will be ALARA.

2. Collective exposures will be ALARA.

3. Measures to keep radiation exposures ALARA will not result in an increased total risk to workers from other hazards.

The objective of these goals is to minimize the <u>total</u> risk to our employees. Working at SMC should not expose our workers to greater risk than is incurred by workers in other "safe" industries of occupations., These risks should also be no greater than those commonly accepted by each of us in our daily lives.

In support of the employees and supervisors, SMC will maintain an effective radiation protection program designed to comply with our three principles, and a radiation protection staff of qualified personnel. Each SMC employee should become familiar with the procedures for radiation safety to ensure that all of our workday activities are conducted according to the three radiation protection principles in order to meet our ALARA goals.

H. Nils Schooley
President

SHIELDALLOY METALLURGICAL CORPORATION

WEST BOULEVARD
P.O. BOX 768
NEWFIELD, NJ 08344
TELEPHONE (609) 692-4200
TWX (510) 687-8918
FAX (609) 697-9025

C. SCOTT EVES
VICE PRESIDENT – ENVIRONMENTAL SERVICES

March 14, 1995

Mr. Thomas T. Martin, Regional Administrator
United States Nuclear Regulatory Commission
475 Allendale Road
King of Prussia, Pennsylvania 19406

Re: Confirmatory Action Letter No. 1-95-004

Dear Mr. Martin:

As set forth in the Confirmatory Action Letter No. 1-95-004 (CAL-1-95-004), the purpose of this letter is to transmit Shieldalloy Metallurgical Corporation's (SMC) actions in response to CAL-1-95-004. Attached is a summary of agreed-upon items, the action taken to date, the current status of each item (open or closed), and a description of pending action.

Please contact me at (609) 692-4200 if you have any questions or if I can provide you with additional information. We will continue to keep you informed of the status of our efforts regarding CAL 1-95-004. Our next status report will be forwarded to you by May 15, 1995.

Sincerely,

C. Scott Eves, RSO
Vice President, Environmental Services

cc: H. Nils Schooly
Ken Pugh

SHIELDALLOY METALLURGICAL CORPORATION
STATUS REPORT FOR
CONFIRMATORY ACTION LETTER NO. 1-95-0048

March 13, 1995

Item 1: Perform an evaluation of workers' intakes of thorium and uranium and determine the occupational doses for all potentially exposed workers, as required by 10 CFR 20.1501. These dose assessments will be based on accurate and validated thorium to alpha ratios, exposure times and air sampling data.

Action (Determination of Isotope-to-Gross Alpha Ratios): As part of the inventory control program, the concentration of all radioactive materials in pyrochlore (the feed material for ferrocolumbium production) is measured on a quarterly basis.[1] Also, as part of the CANAL processing operation, the concentration of the parent and daughter radionuclides in ferrocolumbium slag was measured.[2] All of the measurement results confirm that the parents and the daughters in the pyrochlore and in the slag are in equilibrium. Therefore, the yield-corrected alpha activities of each daughter present in the sample during analysis can be used to determine the thorium-to-gross alpha ratio in the materials. This analysis reveals a mean ratio of 0.076 ± 0.011. Likewise, the mean uranium-to-gross alpha ratio is 0.061 ± 0.007. Attachment 1 shows the data from which this ratio was determined.

Action (Evaluation of Worker Stay Time for 1994): An evaluation of each ferrocolumbium production worker's "stay time" was performed.[3] This evaluation, which included a review of time card information and production logs, revealed that the mean stay time for ferrocolumbium production personnel is 939 ± 917 hours per year. The maximum value was 2478 hours, and the minimum value was 12 hours. A review of the production logs revealed that ferrocolumbium was produced for 236 shifts in 1994. Cleanup and furnace repairs involving source material were performed for an additional 33 shifts. However, some of those activities, which are normally performed during the night shift, occurred during the day shift for a brief period in 1994.

---

1 See TMA/E Report of Analysis dated 9/19/94, Teledyne Report of Analysis dated 6/14/94, Teledyne Report of Analysis dated 6/30/94, and TMA/E Report of Analysis dated 10/17/94.

2 See letter from C. D. Berger, Integrated Environmental Management, Inc., to C. Scott Eves, Shieldalloy Metallurgical Corporation, "Slag Sampling Program Summary", October 3, 1994.

3 See memo from David R. Smith, Shieldalloy Metallurgical Corporation, to Carol D. Berger, Integrated Environmental Management, "D.111 Employee Work Hours for CY 94", February 28, 1995, and memo from David R. Smith, Shieldalloy Metallurgical Corporation, to Carol D. Berger, Integrated Environmental Management, Inc., "D.111 Job Assignment and Duration for (*) and (*)", March 9, 1995.

Action (Dose Assessment for 1994): Based upon area air monitoring, individual breathing zone sampling, individual time card data, and personnel dosimetry results, the Committed Dose Equivalent (CDE) to the Bone Surfaces and the Total Effective Dose Equivalent (TEDE) was determined for all monitored personnel. Attachment 2 contains a listing of results.[4]

Current Status: Closed.

Pending Action: None required.

Item 2: Perform an evaluation of doses for potentially exposed members of the public that may receive the highest whole body exposure in the unrestricted area surrounding your facility, as required by 10 CFR 20.1501.

Action (Evaluation of Emissions from D.111): An air consultant has been retained to evaluate the means by which emissions from the two baghouses in D.111 can be effectively measured.[5] The consultant's on-site assessment took place on Thursday, March 9, 1995.

Action (Off-site Population Dose Estimation for 1994): In 1993, Shieldalloy evaluated the airborne emissions from the plant in a report entitled "Radiation Dose Estimates for Members of the General Public at the Newfield New Jersey Facility".[6] In that report, emissions from the D.111 baghouses and radon emanation rates from the materials in the Storage Yard were estimated. From this information, the maximum individual off-site

---

4 The values listed in Attachment 2 are considered to be over-estimates of the true doses incurred by these individuals for a variety of reasons. (1) The intakes were determined from the results of breathing zone sampling during ferrocolumbium production only. All other operations performed in D.111 were conservatively assumed to generate the same level of airborne activity. (2) The Derived Air Concentrations (DACs) used for the dose assessments are based on the assumption that the inhaled particulates have a diameter of one micrometer AMAD (activity median aerodynamic diameter). The DACs are also based on the assumption that the radioactive daughters of thorium and uranium, born in the body after intake, are metabolized similar to their parent, and that deposition is uniformly-spread in an infinitely thin layer over the relevant surfaces of the bone, without regard for burial under new bone material. These assumptions are artifacts of the ICRP 30 methodology and serve to overestimate true depositions. (3) The metabolic model for ^{232}Th is derived, primarily, from studies of thorotrast patients, wherein a colloidal form of thorium was injected directly into the blood stream and taken up by bone. The thorium in the possession of Shieldalloy is in a tightly-bound matrix of parents and daughters that, if inhaled, is likely to be tenaciously retained in the lung. Thus the lung, rather than the bone surfaces, is the target organ of interest; the stochastic, rather than the non-stochastic dose is limiting; and the DACs contained in 10 CFR 20 Appendix B are artificially low.

5 APEX Environmental, Inc., Oak Ridge, Tennessee is providing the consultant.

6 IT Corporation, "Radiation Dose Estimates for Members of the General Public at the Newfield, New Jersey Facility", IT Corporation Report No. IT/NS-93-107, February 16, 1993.

dose was calculated using the CAP88-PC computer code. Conservative assumptions were made as input to the code when site-specific information was not available. This analysis demonstrated that the maximum annual radiation dose from particulate emissions (0.22 millirem CEDE) occurred 300 meters East Southeast of the D.111 stack. Likewise, the maximum annual radiation dose from radon (0.009 millirem CEDE) occurred 50 meters East Southeast of the Storage Yard.[7]

As part of its radiation protection program, Shieldalloy deploys environmental dosimeters (TLDs) at various locations on the perimeter fence of the Newfield facility. These are used to estimate the external component of the off-site population dose. In 1994, each TLD remained in place for approximately one quarter, at which time they were retrieved, processed, and the doses were recorded. (New dosimeter assemblies were then deployed for the next quarter.) For the TLDs on the perimeter fence only, the mean measured doses for the first, second and third quarters of 1994 were 77.7 $\pm$ 110.6 millirem, 93.8 $\pm$ 119.8 millirem, and 71.4 $\pm$ 176.2 millirem, respectively.

Fourth-quarter 1994 TLD were retrieved and mailed to the dosimeter processor during the week of February 13, 1995. Results are expected by March 31, 1995. For the first three quarters of 1994, the maximum measured perimeter exposure rate occurred due north of the Storage Yard, at a distance of about 30 feet from the slag piles (Station 6).[8] However, ambient exposure rates measured during an environmental assessment indicated that this exposure rate drops by a factor of five at a distance of about 30 feet from the boundary fence. An equivalent annual average exposure rate (assuming continuous occupancy) of 100 millirem occurs at a distance of 108 feet north of the measurement location.[9]

The closest residence to the Newfield plant is over 85 feet south of the property line, which is over 150 feet from the slag piles. The ambient gamma exposure rate at this location is not discernible from background.

There are only three potential exposure scenarios for members of the general public. They involve (1) constant and continuous presence 85 feet south of the Storage Yard; (2) periodic presence (e.g., less than one hour per week) at any randomly-selected location around the perimeter fence; or (3) periodic presence (e.g., less than one hour per month)

---

7 Ferrocolumbium production procedures in 1994 did not differ from those of 1993. Therefore, the findings of this 1993 analysis are assumed to be representative, and were used to determine 1994 population doses pursuant to 10 CFR 20.1301.

8 A municipal landfill abuts the north boundary of the Shieldalloy property at this location.

9 IT Corporation, "Assessment of Environmental Radiological Conditions at the Newfield Facility", IT Corporation Report No. IT/NS-92-106, April 1, 1992.

only at Station 6, which is the location of maximum measured exposure.[10] The maximum possible annual exposure of a member of the general public for each of these scenarios, with the maximum dose contribution from particulate and radon emissions included in the assessment, is 0.23 , 2.15 and 3.43 millirem, respectively. These values, which over-estimate the true dose that may have been incurred by any single individual, are still well-below the 100 millirem per year limit specified in 10 CFR 20.1301.

Current Status: Open.

Pending Action: The recommendations from the air consultant regarding measurement of baghouse emissions are anticipated by March 30, 1994. The Radiation Safety Committee will meet within 15 days after receipt of the consultant's report to evaluate the findings and implement applicable recommendations. The assessment of 1994 population doses for particulate emissions will be repeated once additional measurement data are obtained.

Item 3: Immediately following the completion of the above dose assessments, implement interim ALARA measures to minimize workers' thorium and uranium intakes. A comprehensive ALARA program showing your long term plans with documented procedures, equipment, engineering controls, and personnel training will be submitted.

Action Taken: A standard operating procedure entitled "ALARA Program" was drafted and is under review by the Radiation Safety Committee. This procedure describes the Shieldalloy ALARA program.

Action Taken: Ferrocolumbium and CANAL production operations are presumed to generate primarily large (e.g., greater than one micrometer AMAD) particles. To improve interpretation of air sampling results in the vicinity of these operations, the particle size distribution was measured using a Graseby/Andersen Model Mark III Particle Fractionating Sampler. Three samples were collected during the trial CANAL crushing operation. The results of these analyses, shown in Attachment 3, indicate mean particles sizes of 8.65, 7.90 and 8.04 micrometers AMAD. Additional samples were collected during ferrocolumbium production (second floor of D.111) beginning on February 16, 1995. On February 21, 1995, the filters were forwarded to a commercial analytical laboratory for analysis. Results are anticipated by March 18, 1995. Sample collection in the vicinity of the pyrochlore mixing process (first floor of D.111) began on March 5, 1995 and continued until March 8th. These filters were forwarded to the laboratory and results are anticipated in early April.

---

10 A stay-time of one hour per month at this location is conservative in that there is no physical evidence that individuals frequent this area. Furthermore, monitored Shieldalloy employees who frequent the area for durations greatly in excess of one hour per month, incurred exposures that were only slightly above the detection limits of the dosimetry system.

Current Status: Open

Pending Action: The particle size analyses are expected to be completed by April 15, 1995. The first quarter, 1995 surveillance results, including the results of breathing zone sampling and external exposure rate measurements, are expected to be completed by March 31, 1995. The Radiation Safety Committee will then to finalize draft standard operating procedures for radiation protection, and set initial ALARA goals based upon the information obtained during the particle size analysis and first quarter's surveillance. A written statement indicating senior management commitment to the ALARA concept will be finalized, signed, and posted in appropriate locations within the plant by May 15, 1995.

ATTACHMENT 1
ISOTOPE-TO-GROSS ALPHA RATIOS

Determination of Gross Alpha to Isotopic Ra

Series Equilibrium Pyrochlore-9401 9/17/94

	pCi/g
Th-232 Concentration:	848.40
U-238 Concentration	557.10

RN	alpha/dis	Br Ratio	Alpha
Th-232	1.00	1.00	848.40
Ra-228	0.00	1.00	0.00
Ac-228	0.00	1.00	0.00
Th-228	0.99	1.00	839.92
Ra-224	1.00	1.00	848.40
Rn-220	1.00	1.00	848.40
Po-216	1.00	1.00	848.40
Pb-212	0.00	1.00	0.00
Bi-212	0.35	1.00	296.94
Po-212	1.00	0.64	542.98
Tl-208	0.00	0.36	0.00
U-238	1.00	1.00	557.10
Th-234	0.00	1.00	0.00
Pa-234m	0.00	1.00	0.00
Pa-234	0.00	0.00	0.00
U-234	1.00	1.00	557.10
Th-230	1.00	1.00	557.10
Ra-226	1.00	1.00	557.10
Rn-222	1.00	1.00	557.10
Po-218	1.00	1.00	556.99
Pb-214	0.00	1.00	0.00
At-218	1.00	0.00	0.11
Bi-214	1.00	1.00	556.99
Po-214	1.00	1.00	556.99
Tl-210	0.00	0.00	0.00
Pb-210	0.00	1.00	0.00
Bi-210	0.00	1.00	0.00
Po-210	1.00	1.00	557.10
Tl-206	0.00	1.00	0.00
	TotAlpha		10087.11
	Th/Alpha		0.084
	U/Alpha		0.055

Determination of Gross Alpha to Isotopic F s

Series Equilibrium Pyrochlore-9402 9/17/94

	pCi/g
Th-232 Concentration:	549.60
U-238 Concentration	521.60

RN	alpha/dis	Br Ratio	Alpha
Th-232	1.00	1.00	549.60
Ra-228	0.00	1.00	0.00
Ac-228	0.00	1.00	0.00
Th-228	0.99	1.00	544.10
Ra-224	1.00	1.00	549.60
Rn-220	1.00	1.00	549.60
Po-216	1.00	1.00	549.60
Pb-212	0.00	1.00	0.00
Bi-212	0.35	1.00	192.36
Po-212	1.00	0.64	351.74
Tl-208	0.00	0.36	0.00
U-238	1.00	1.00	521.60
Th-234	0.00	1.00	0.00
Pa-234m	0.00	1.00	0.00
Pa-234	0.00	0.00	0.00
U-234	1.00	1.00	521.60
Th-230	1.00	1.00	521.60
Ra-226	1.00	1.00	521.60
Rn-222	1.00	1.00	521.60
Po-218	1.00	1.00	521.50
Pb-214	0.00	1.00	0.00
At-218	1.00	0.00	0.10
Bi-214	1.00	1.00	521.50
Po-214	1.00	1.00	521.50
Tl-210	0.00	0.00	0.00
Pb-210	0.00	1.00	0.00
Bi-210	0.00	1.00	0.00
Po-210	1.00	1.00	521.60
Tl-206	0.00	1.00	0.00
	TotAlpha		7980.80
	Th/Alpha		0.069
	U/Alpha		0.065

Determination of Gross Alpha to Isotopic R

Series Equilibrium Pyrochlore-9405 10/14/94

	pCi/g
Th-232 Concentration:	869.30
U-238 Concentration	433.40

RN	alpha/dis	Br Ratio	Alpha
Th-232	1.00	1.00	869.30
Ra-228	0.00	1.00	0.00
Ac-228	0.00	1.00	0.00
Th-228	0.99	1.00	860.61
Ra-224	1.00	1.00	869.30
Rn-220	1.00	1.00	869.30
Po-216	1.00	1.00	869.30
Pb-212	0.00	1.00	0.00
Bi-212	0.35	1.00	304.25
Po-212	1.00	0.64	556.35
Tl-208	0.00	0.36	0.00
U-238	1.00	1.00	433.40
Th-234	0.00	1.00	0.00
Pa-234m	0.00	1.00	0.00
Pa-234	0.00	0.00	0.00
U-234	1.00	1.00	433.40
Th-230	1.00	1.00	433.40
Ra-226	1.00	1.00	433.40
Rn-222	1.00	1.00	433.40
Po-218	1.00	1.00	433.31
Pb-214	0.00	1.00	0.00
At-218	1.00	0.00	0.09
Bi-214	1.00	1.00	433.31
Po-214	1.00	1.00	433.31
Tl-210	0.00	0.00	0.00
Pb-210	0.00	1.00	0.00
Bi-210	0.00	1.00	0.00
Po-210	1.00	1.00	433.40
Tl-206	0.00	1.00	0.00
	TotAlpha		9098.84
	Th/Alpha		0.096
	U/Alpha		0.048

Determination of Gross Alpha to Isotopic R

Series Equilibrium Pyrochlore-9406 10/14/94

	pCi/g
Th-232 Concentration:	804.70
U-238 Concentration	405.00

RN	alpha/dis	Br Ratio	Alpha
Th-232	1.00	1.00	804.70
Ra-228	0.00	1.00	0.00
Ac-228	0.00	1.00	0.00
Th-228	0.99	1.00	796.65
Ra-224	1.00	1.00	804.70
Rn-220	1.00	1.00	804.70
Po-216	1.00	1.00	804.70
Pb-212	0.00	1.00	0.00
Bi-212	0.35	1.00	281.65
Po-212	1.00	0.64	515.01
Tl-208	0.00	0.36	0.00
U-238	1.00	1.00	405.00
Th-234	0.00	1.00	0.00
Pa-234m	0.00	1.00	0.00
Pa-234	0.00	0.00	0.00
U-234	1.00	1.00	405.00
Th-230	1.00	1.00	405.00
Ra-226	1.00	1.00	405.00
Rn-222	1.00	1.00	405.00
Po-218	1.00	1.00	404.92
Pb-214	0.00	1.00	0.00
At-218	1.00	0.00	0.08
Bi-214	1.00	1.00	404.92
Po-214	1.00	1.00	404.92
Tl-210	0.00	0.00	0.00
Pb-210	0.00	1.00	0.00
Bi-210	0.00	1.00	0.00
Po-210	1.00	1.00	405.00
Tl-206	0.00	1.00	0.00
	TotAlpha		8456.94
	Th/Alpha		0.095
	U/Alpha		0.048

Determination of Gross Alpha to Isotopic R

Series Equilibrium Pyrochlore-9403 8/5/95

	pCi/g
Th-232 Concentration:	717.00
U-238 Concentration	484.00

RN	alpha/dis	Br Ratio	Alpha
Th-232	1.00	1.00	717.00
Ra-228	0.00	1.00	0.00
Ac-228	0.00	1.00	0.00
Th-228	0.99	1.00	709.83
Ra-224	1.00	1.00	717.00
Rn-220	1.00	1.00	717.00
Po-216	1.00	1.00	717.00
Pb-212	0.00	1.00	0.00
Bi-212	0.35	1.00	250.95
Po-212	1.00	0.64	458.88
Tl-208	0.00	0.36	0.00
U-238	1.00	1.00	484.00
Th-234	0.00	1.00	0.00
Pa-234m	0.00	1.00	0.00
Pa-234	0.00	0.00	0.00
U-234	1.00	1.00	484.00
Th-230	1.00	1.00	484.00
Ra-226	1.00	1.00	484.00
Rn-222	1.00	1.00	484.00
Po-218	1.00	1.00	483.90
Pb-214	0.00	1.00	0.00
At-218	1.00	0.00	0.10
Bi-214	1.00	1.00	483.90
Po-214	1.00	1.00	483.90
Tl-210	0.00	0.00	0.00
Pb-210	0.00	1.00	0.00
Bi-210	0.00	1.00	0.00
Po-210	1.00	1.00	484.00
Tl-206	0.00	1.00	0.00
	TotAlpha		8643.47
	Th/Alpha		0.083
	U/Alpha		0.056

Determination of Gross Alpha to Isotopic Ra

Series Equilibrium Pyrochlore-9404 8/5/95

	pCi/g
Th-232 Concentration:	751.00
U-238 Concentration	515.00

RN	alpha/dis	Br Ratio	Alpha
Th-232	1.00	1.00	751.00
Ra-228	0.00	1.00	0.00
Ac-228	0.00	1.00	0.00
Th-228	0.99	1.00	743.49
Ra-224	1.00	1.00	751.00
Rn-220	1.00	1.00	751.00
Po-216	1.00	1.00	751.00
Pb-212	0.00	1.00	0.00
Bi-212	0.35	1.00	262.85
Po-212	1.00	0.64	480.64
Tl-208	0.00	0.36	0.00
U-238	1.00	1.00	515.00
Th-234	0.00	1.00	0.00
Pa-234m	0.00	1.00	0.00
Pa-234	0.00	0.00	0.00
U-234	1.00	1.00	515.00
Th-230	1.00	1.00	515.00
Ra-226	1.00	1.00	515.00
Rn-222	1.00	1.00	515.00
Po-218	1.00	1.00	514.90
Pb-214	0.00	1.00	0.00
At-218	1.00	0.00	0.10
Bi-214	1.00	1.00	514.90
Po-214	1.00	1.00	514.90
Tl-210	0.00	0.00	0.00
Pb-210	0.00	1.00	0.00
Bi-210	0.00	1.00	0.00
Po-210	1.00	1.00	515.00
Tl-206	0.00	1.00	0.00
	TotAlpha		9125.77
	Th/Alpha		0.082
	U/Alpha		0.056

Determination of Gross Alpha to Isotopic R

Series Equilibrium Slag-1 7/29/94

	pCi/g
Th-232 Concentration:	354.00
U-238 Concentration	347.00

RN	alpha/dis	Br Ratio	Alpha
Th-232	1.00	1.00	354.00
Ra-228	0.00	1.00	0.00
Ac-228	0.00	1.00	0.00
Th-228	0.99	1.00	350.46
Ra-224	1.00	1.00	354.00
Rn-220	1.00	1.00	354.00
Po-216	1.00	1.00	354.00
Pb-212	0.00	1.00	0.00
Bi-212	0.35	1.00	123.90
Po-212	1.00	0.64	226.56
Tl-208	0.00	0.36	0.00
U-238	1.00	1.00	347.00
Th-234	0.00	1.00	0.00
Pa-234m	0.00	1.00	0.00
Pa-234	0.00	0.00	0.00
U-234	1.00	1.00	347.00
Th-230	1.00	1.00	347.00
Ra-226	1.00	1.00	347.00
Rn-222	1.00	1.00	347.00
Po-218	1.00	1.00	346.93
Pb-214	0.00	1.00	0.00
At-218	1.00	0.00	0.07
Bi-214	1.00	1.00	346.93
Po-214	1.00	1.00	346.93
Tl-210	0.00	0.00	0.00
Pb-210	0.00	1.00	0.00
Bi-210	0.00	1.00	0.00
Po-210	1.00	1.00	347.00
Tl-206	0.00	1.00	0.00
	TotAlpha		5239.78
	Th/Alpha		0.068
	U/Alpha		0.066

Determination of Gross Alpha to Isotopic F s

Series Equilibrium Slag-2 7/29/94

	pCi/g
Th-232 Concentration:	470.00
U-238 Concentration	408.00

RN	alpha/dis	Br Ratio	Alpha
Th-232	1.00	1.00	470.00
Ra-228	0.00	1.00	0.00
Ac-228	0.00	1.00	0.00
Th-228	0.99	1.00	465.30
Ra-224	1.00	1.00	470.00
Rn-220	1.00	1.00	470.00
Po-216	1.00	1.00	470.00
Pb-212	0.00	1.00	0.00
Bi-212	0.35	1.00	164.50
Po-212	1.00	0.64	300.80
Tl-208	0.00	0.36	0.00
U-238	1.00	1.00	408.00
Th-234	0.00	1.00	0.00
Pa-234m	0.00	1.00	0.00
Pa-234	0.00	0.00	0.00
U-234	1.00	1.00	408.00
Th-230	1.00	1.00	408.00
Ra-226	1.00	1.00	408.00
Rn-222	1.00	1.00	408.00
Po-218	1.00	1.00	407.92
Pb-214	0.00	1.00	0.00
At-218	1.00	0.00	0.08
Bi-214	1.00	1.00	407.92
Po-214	1.00	1.00	407.92
Tl-210	0.00	0.00	0.00
Pb-210	0.00	1.00	0.00
Bi-210	0.00	1.00	0.00
Po-210	1.00	1.00	408.00
Tl-206	0.00	1.00	0.00
	TotAlpha		6482.44
	Th/Alpha		0.073
	U/Alpha		0.063

Determination of Gross Alpha to Isotopic R

Series Equilibrium Slag-3 7/29/94

	pCi/g
Th-232 Concentration:	501.00
U-238 Concentration	409.00

RN	alpha/dis	Br Ratio	Alpha
Th-232	1.00	1.00	501.00
Ra-228	0.00	1.00	0.00
Ac-228	0.00	1.00	0.00
Th-228	0.99	1.00	495.99
Ra-224	1.00	1.00	501.00
Rn-220	1.00	1.00	501.00
Po-216	1.00	1.00	501.00
Pb-212	0.00	1.00	0.00
Bi-212	0.35	1.00	175.35
Po-212	1.00	0.64	320.64
Tl-208	0.00	0.36	0.00
U-238	1.00	1.00	409.00
Th-234	0.00	1.00	0.00
Pa-234m	0.00	1.00	0.00
Pa-234	0.00	0.00	0.00
U-234	1.00	1.00	409.00
Th-230	1.00	1.00	409.00
Ra-226	1.00	1.00	409.00
Rn-222	1.00	1.00	409.00
Po-218	1.00	1.00	408.92
Pb-214	0.00	1.00	0.00
At-218	1.00	0.00	0.08
Bi-214	1.00	1.00	408.92
Po-214	1.00	1.00	408.92
Tl-210	0.00	0.00	0.00
Pb-210	0.00	1.00	0.00
Bi-210	0.00	1.00	0.00
Po-210	1.00	1.00	409.00
Tl-206	0.00	1.00	0.00
	TotAlpha		6676.82
	Th/Alpha		0.075
	U/Alpha		0.061

Determination of Gross Alpha to Isotopic R s

Series Equilibrium Slag-4 7/29/94

	pCi/g
Th-232 Concentration:	317.00
U-238 Concentration	323.00

RN	alpha/dis	Br Ratio	Alpha
Th-232	1.00	1.00	317.00
Ra-228	0.00	1.00	0.00
Ac-228	0.00	1.00	0.00
Th-228	0.99	1.00	313.83
Ra-224	1.00	1.00	317.00
Rn-220	1.00	1.00	317.00
Po-216	1.00	1.00	317.00
Pb-212	0.00	1.00	0.00
Bi-212	0.35	1.00	110.95
Po-212	1.00	0.64	202.88
Tl-208	0.00	0.36	0.00
U-238	1.00	1.00	323.00
Th-234	0.00	1.00	0.00
Pa-234m	0.00	1.00	0.00
Pa-234	0.00	0.00	0.00
U-234	1.00	1.00	323.00
Th-230	1.00	1.00	323.00
Ra-226	1.00	1.00	323.00
Rn-222	1.00	1.00	323.00
Po-218	1.00	1.00	322.94
Pb-214	0.00	1.00	0.00
At-218	1.00	0.00	0.06
Bi-214	1.00	1.00	322.94
Po-214	1.00	1.00	322.94
Tl-210	0.00	0.00	0.00
Pb-210	0.00	1.00	0.00
Bi-210	0.00	1.00	0.00
Po-210	1.00	1.00	323.00
Tl-206	0.00	1.00	0.00
	TotAlpha		4802.53
	Th/Alpha		0.066
	U/Alpha		0.067

Determination of Gross Alpha to Isotopic R

Series Equilibrium Slag-5 7/29/94

	pCi/g
Th-232 Concentration:	322.00
U-238 Concentration	323.00

RN	alpha/dis	Br Ratio	Alpha
Th-232	1.00	1.00	322.00
Ra-228	0.00	1.00	0.00
Ac-228	0.00	1.00	0.00
Th-228	0.99	1.00	318.78
Ra-224	1.00	1.00	322.00
Rn-220	1.00	1.00	322.00
Po-216	1.00	1.00	322.00
Pb-212	0.00	1.00	0.00
Bi-212	0.35	1.00	112.70
Po-212	1.00	0.64	206.08
Tl-208	0.00	0.36	0.00
U-238	1.00	1.00	323.00
Th-234	0.00	1.00	0.00
Pa-234m	0.00	1.00	0.00
Pa-234	0.00	0.00	0.00
U-234	1.00	1.00	323.00
Th-230	1.00	1.00	323.00
Ra-226	1.00	1.00	323.00
Rn-222	1.00	1.00	323.00
Po-218	1.00	1.00	322.94
Pb-214	0.00	1.00	0.00
At-218	1.00	0.00	0.06
Bi-214	1.00	1.00	322.94
Po-214	1.00	1.00	322.94
Tl-210	0.00	0.00	0.00
Pb-210	0.00	1.00	0.00
Bi-210	0.00	1.00	0.00
Po-210	1.00	1.00	323.00
Tl-206	0.00	1.00	0.00
	TotAlpha		4832.43
	Th/Alpha		0.067
	U/Alpha		0.067

Determination of Gross Alpha to Isotopic R

Series Equilibrium Slag-6 7/29/94

	pCi/g
Th-232 Concentration:	401.00
U-238 Concentration	455.00

RN	alpha/dis	Br Ratio	Alpha
Th-232	1.00	1.00	401.00
Ra-228	0.00	1.00	0.00
Ac-228	0.00	1.00	0.00
Th-228	0.99	1.00	396.99
Ra-224	1.00	1.00	401.00
Rn-220	1.00	1.00	401.00
Po-216	1.00	1.00	401.00
Pb-212	0.00	1.00	0.00
Bi-212	0.35	1.00	140.35
Po-212	1.00	0.64	256.64
Tl-208	0.00	0.36	0.00
U-238	1.00	1.00	455.00
Th-234	0.00	1.00	0.00
Pa-234m	0.00	1.00	0.00
Pa-234	0.00	0.00	0.00
U-234	1.00	1.00	455.00
Th-230	1.00	1.00	455.00
Ra-226	1.00	1.00	455.00
Rn-222	1.00	1.00	455.00
Po-218	1.00	1.00	454.91
Pb-214	0.00	1.00	0.00
At-218	1.00	0.00	0.09
Bi-214	1.00	1.00	454.91
Po-214	1.00	1.00	454.91
Tl-210	0.00	0.00	0.00
Pb-210	0.00	1.00	0.00
Bi-210	0.00	1.00	0.00
Po-210	1.00	1.00	455.00
Tl-206	0.00	1.00	0.00
	TotAlpha		6492.80
	Th/Alpha		0.062
	U/Alpha		0.070

Determination of Gross Alpha to Isotopic Ra

Series Equilibrium Slag-7 7/29/94

	pCi/g
Th-232 Concentration:	304.00
U-238 Concentration	301.00

RN	alpha/dis	Br Ratio	Alpha
Th-232	1.00	1.00	304.00
Ra-228	0.00	1.00	0.00
Ac-228	0.00	1.00	0.00
Th-228	0.99	1.00	300.96
Ra-224	1.00	1.00	304.00
Rn-220	1.00	1.00	304.00
Po-216	1.00	1.00	304.00
Pb-212	0.00	1.00	0.00
Bi-212	0.35	1.00	106.40
Po-212	1.00	0.64	194.56
Tl-208	0.00	0.36	0.00
U-238	1.00	1.00	301.00
Th-234	0.00	1.00	0.00
Pa-234m	0.00	1.00	0.00
Pa-234	0.00	0.00	0.00
U-234	1.00	1.00	301.00
Th-230	1.00	1.00	301.00
Ra-226	1.00	1.00	301.00
Rn-222	1.00	1.00	301.00
Po-218	1.00	1.00	300.94
Pb-214	0.00	1.00	0.00
At-218	1.00	0.00	0.06
Bi-214	1.00	1.00	300.94
Po-214	1.00	1.00	300.94
Tl-210	0.00	0.00	0.00
Pb-210	0.00	1.00	0.00
Bi-210	0.00	1.00	0.00
Po-210	1.00	1.00	301.00
Tl-206	0.00	1.00	0.00
	TotAlpha		4526.80
	Th/Alpha		0.067
	U/Alpha		0.066

ATTACHMENT 2
1994 TEDE REPORT

SHIELDALLOY METALLURGICAL CORPORATION - 1994 TEDE REPORT

Clock No.	Quarterly Work Hrs in D111	Mean BZA (uCi/ml) Q1	Q2	Q3	Q4	TLD mr Q1	Q2	Q3	Q4	Th-232 DAC-hr (NS) Q1	Q2	Q3	Q4	Th-232 DAC-hr (S) Q1	Q2	Q3	Q4	U-238 DAC-hr (S) Q1	Q2	Q3	Q4	CDE(BS) Rem	TEDE Rem
1448	3	1.90E-12								0.43	0.38	0.38	0.38	0.29	0.25	0.25	0.25	0.02	0.02	0.02	0.02	0.039	0.003
1717	539.25	2.32E-12				18	17	17		95.08	68.20	68.20	68.20	63.39	45.47	45.47	45.47	3.82	2.74	2.74	2.74	12.788	0.582
1689	433.75	1.03E-12	1.15E-12		1.10E-12			12		33.86	54.86	54.86	36.26	22.57	25.27	36.57	24.17	1.36	1.52	2.20	1.46	7.374	0.300
1257	526.75	1.10E-12	1.20E-12		8.40E-13	0	0	14		44.04	48.04	66.62	33.63	29.36	32.03	44.42	22.42	1.77	1.93	2.67	1.35	8.207	0.354
1935	11	1.55E-12								1.30	1.39	1.39	1.39	0.86	0.93	0.93	0.93	0.05	0.06	0.06	0.06	0.233	0.010
1569	112.25		1.10E-12			0	0	0		14.20	9.38	14.20	14.20	9.46	6.26	9.46	9.46	0.57	0.38	0.57	0.57	2.218	0.092
1737	80.25				2.33E-12			0		10.15	10.15	10.15	14.20	6.77	6.77	6.77	9.46	0.41	0.41	0.41	0.57	1.905	0.079
1800	121.25				1.75E-12			0		15.34	15.34	15.34	16.15	10.22	10.22	10.22	10.77	0.62	0.62	0.62	0.65	2.652	0.110
1727	157.75				1.80E-12	0	0	0		19.95	19.95	19.95	21.58	13.30	13.30	13.30	14.39	0.80	0.80	0.80	0.87	3.475	0.144
1995	10				5.80E-12					1.26	1.26	1.26	4.41	0.84	0.84	0.84	2.94	0.05	0.05	0.05	0.18	0.350	0.014
1841	203.5				1.00E-12			0		25.74	25.74	25.74	15.47	17.16	17.16	17.16	10.31	1.03	1.03	1.03	0.62	3.955	0.164
1548	619.5				6.60E-13	19	0	10		78.35	78.35	78.35	31.07	52.24	52.24	52.24	20.72	3.14	3.14	3.14	1.25	11.356	0.499
0750	0					0	0	0		0.00	0.00	0.00	0.00	0.00	0.00	0.00	0.00	0.00	0.00	0.00	0.00	0.000	0.000
1473	0									0.00	0.00	0.00	0.00	0.00	0.00	0.00	0.00	0.00	0.00	0.00	0.00	0.000	0.000
1092	0					0	0	0		0.00	0.00	0.00	0.00	0.00	0.00	0.00	0.00	0.00	0.00	0.00	0.00	0.000	0.000
1083	0						0	0		0.00	0.00	0.00	0.00	0.00	0.00	0.00	0.00	0.00	0.00	0.00	0.00	0.000	0.000
6508	0					0	0	0		0.00	0.00	0.00	0.00	0.00	0.00	0.00	0.00	0.00	0.00	0.00	0.00	0.000	0.000
1965	0							0		0.00	0.00	0.00	0.00	0.00	0.00	0.00	0.00	0.00	0.00	0.00	0.00	0.000	0.000
1700	0							0		0.00	0.00	0.00	0.00	0.00	0.00	0.00	0.00	0.00	0.00	0.00	0.00	0.000	0.000

ATTACHMENT 3
PARTICLE SIZE DATA FROM THE CANAL CRUSHING OPERATION

Location	Stage	Effective Cut Diameter (microns)	Total Activity (micrograms)	Percent of Total Activity	Cumulative (Percent Less Than)
West of feed hopper on crusher	0	13.6 and above	.1034	.128831	.8711687017
	1	8.6	.301	.375031	.496137553
	2	5.6	.0756	.094194	.401943683
	3	4.0	.0492	.061301	.3406429105
	4	2.5	.0806	.100424	.2402192873
	5	1.3	.0743	.092574	.1476451533
	6	1.8	.028	.034887	.1127585348
	7	.54	.0221	.027536	.0852230252
	Final	Less than 0.54	.0684	.085223	6.93889E-17
		TOTAL	.8026		
South of crusher on stairs, pointing east	0	13.6 and above	.1438	.221572	.7784283513
	1	8.6	.162	.249615	.5288135593
	2	5.6	.0798	.122958	.4058551618
	3	4.0	.0598	.091834	.3140215716
	4	2.5	.0887	.136672	.1773497689
	5	1.3	.0449	.069183	.1081664099
	6	1.8	.064	.098613	.0095531587
	7	.54	0	0	.0095531587
	Final	Less than 0.54	.0062	.009553	2.25514E-17
		TOTAL	.649		

Location	Stage	Effective Cut Diameter (microns)	Total Activity (micrograms)	Percent of Total Activity	Cumulative (Percent Less Than)
South of crusher on stairs, pointing north	0	13.6 and above	.1975	.348263	.6517369071
	1	8.6	.0704	.12414	.5275965438
	2	5.6	.0835	.14724	.3806561982
	3	4.0	.0791	.139482	.2408746253
	4	2.5	.0782	.137895	.1029800741
	5	1.3	.0213	.03756	.0654205607
	6	1.8	.0289	.050961	.0144595309
	7	.54	0	0	.0144595309
	Final	Less than 0.54	.0082	.01446	6.93889E-17
		TOTAL	.5671		