71-9187

QSA GLOBAL

QSA Global, Inc.
40 North Avenue
Burlington, MA 01803
Telephone: (781) 272-2000
Toll Free: (800) 815-1383
Facsimile: (781) 273-2216

24 August 2006

Ms. Jessica Glenny, Project Manager
Licensing Section
Spent Fuel Project Office
Office of Nuclear Material Safety and Safeguards
U.S. Nuclear Regulatory Commission
11555 Rockville Pike
One White Flint
Rockville, MD 20852

RE: TAC No. L23952, Supplemental Information for Current Amendment USA/9187/B(U)-96 for the Model 865 Transport Package

Dear Ms. Glenny:

The following is provided in response to your request for additional information dated 9 Aug 2006 and our telephone conversation on 24 Aug 06:

1-1 The SAR index has been reformatted to reference the separation pages for the appendices referenced in Section 2.12. The letter dated March 16, 1999 has been removed from Section 2.12.1 to reduce confusion in evaluation of this document.

We confirm that the technical information and evaluation portions of the documents referenced in Sections 2.12.1, 2.12.2 and 2.12.3 remain unchanged from the versions previously submitted to the USNRC. These documents were not part of the submission re-formatting which occurred for the SAR body text document, as they were only relocated within the reformatted SAR document.

For the Test Plan 84 Report, this submission did include some documents from appendices of the original report which were not previously submitted as part of the SAR appendix. This includes photographs in appendix D of the report (which is not listed on the report index) as well as the data sheets in appendix C of the report.

The data sheets shown in appendix C of Test Plan 84 Report are copies of the original data sheets which were generated using pages from Test Plan 84 which is submitted as Section 2.12.1 of the current SAR. Since the data sheets were part of a precursor document, the pagination of these pages is not sequential to their insertion as part of the separate appendix in the Test Plan 84 Report.

Just as the reference documents inserted into Sections 2.12.1, 2.12.2 and 2.12.3 of the SAR do not incorporate a secondary paginination system relative to the overall SAR document, the sub-appendices of the individual documents in these SAR sections again were not re-paginated when they were originally compiled into their respective upper tier documents.

NMSS01

However, their has been no document changes to the Test Plan 84, Test Plan 84 Report or the Finite Element Report for those originally used to demonstrate compliance of the Model 865 package under the current revision 6 of the USNRC Certificate of Conformance.

2-1 Reference to ASME has been removed from the SAR Section 2.1.4.2.

2-2 All hardware on the 865 is considered to be safety critical. Section 2.1.4.2 of the SAR has been revised to remove the words "safety critical" and stated that "All hardware meets ASME-B18 standards."

2-3 Some of the standards referenced in this Table have been updated to provide consistency across all our transport package approvals for these basic materials. Though the entry for Stainless Steel has been condensed to a single grade material, the weakest grade is now referenced in this table. All other table entries for tensile strength and yield strength for all other materials entries are identical to the values listed in the current SAR. Also for the materials listed only the references for Depleted Uranium and Stainless steel have changed, the other three materials reference the same resources as in the current SAR (although they numerical order in the resource reference list below the table may have changed). These changes will have no adverse impact on the calculations used throughout the document and they were made for administrative purposes to ensure consistency only.

2-4 Section 2.4.1 demonstrates that the package fabrication is satisfactory to meet the stress associated with the lifting requirements of 10 CFR 71.45(a). As this requirement is applicable to normal transport these stress calculations are referenced in Section 2.6.1.3 of the SAR.

Section 2.7.4.3 addresses the package ability to satisfactory withstand the thermal stresses generated under Hypothetical Accident Transport Conditions. Since the Hypothetical Accident Thermal Transport Conditions are more severe than the Normal Transport Thermal conditions and the package is compliant to the Hypothetical Accident conditions, by direct comparison the package will meet the thermal stresses generated under Normal Transport conditions.

For clarification, this discussion on stress applicability will be added to Section 2.6.1.3.

2-5 Section 2.6.3 of the SAR has been corrected to reference the ISO 2919-1999 Class 3 external pressure range as 25 kN/m^2 to 2 MN kN/m^2.

2-6 Section 2.6.11 has been added to the 865 SAR Rev 9 to re-instate the information you requested in your letter.

2-7 Section 2.7 of the SAR has been revised to reference Section 2.7.8 for a summary of the testing results.

2-8 Sections 2.7.1.5 and 2.7.3.3 of the SAR have been revised to reference Table 2.7c instead of 2.7.8.1.

2-9 Sections 2.7.4.5 and 2.7.4.6 of the SAR have been revised to reference Section 2.12.3 as the appropriate reference for the Finite Element Analysis.

7-1 Section 7.1.1 of the SAR has been revised as requested. See SAR Revision 9.

7-2 Section 7.1.2.1.c of the proposed application ensures the lock is secured. This step was expanded to fully explain how the lock is ensured to be secured over the source.

7-3 The information referenced in your letter relates to the use of overpacks as required for package shipment according to regulations established in 10 CFR 71 and 49 CFR 171-178. Compliance to the transportation regulations is referenced for users of this package in Section 7.1.3.4 which requires the user of the package to ensure the package is shipped in accordance with the requirements of 49 CFR 171-178. As the items noted in your letter are part of the standard transportation regulations in 49 CFR 171-178 and Section 7.1.3.4 of the SAR requires users to comply with those regulations, repetition of the transportation requirements is not necessary, therefore they were removed as separate steps in Section 7.

7-4 Section 7.1.1 covers "Preparation for Loading" and the subsections 7.1.1.1 and 7.1.1.2 are actions to be performed on an empty package prior to source loading.

Section 7.1.2 and 7.1.2.1 cover "Loading of Contents" and as a prerequisite to transportation it confirms that steps 7.1.2.1.a and 7.1.2.1.b have been performed before you load the source into the package in step 7.1.2.1.c.

To improve clarity a step has been added to Section 7.1.2.1.c which reminds the user that the assembly must be disassembled prior to insertion of the source rod.

7-5 This has been added to Section 7.2.1.2.a as you requested.

7-6 This section has been clarified to improve understanding of the intent of this section.

7-7 This information has been included in Revision 9 of the SAR as Section 7.2.1.2.e.

7-8 Section 7.1.3.2 has been revised to directly reference the applicable regulation for compliance with the contamination wipe results.

8-1 Affected number in Section 8 has been corrected to remove typographical errors.

8-2 Section 8.1.6 has been revised to incorporate the wording you requested.

8-3 Section 8.2.2 is referring to the fact that when a Model 865 is shipped to us for reloading or maintenance work, QSA Global will perform the following:

- Unload the radioactive source from the device and perform a wipe test directly on the source.
- After the source rod is unloaded from the device QSA Global will take an additional, precautionary contamination wipe of the now empty Model 865 source tube which is a permanent part of the Model 865 device and is not removed or disassembled by the customer. Each Model 865 has only one source tube which is an integral part of the device.

Enclosed is a complete copy of Revision 9 to the SAR including all appendices. Also enclosed is a list of affected pages for this revision of the SAR. Changes to the text of Revision 8 of the SAR addressing items discussed in this letter are indicated by vertical lines in the right hand margin. Should you have any additional questions or wish to discuss this submission, please contact me as shown below.

Sincerely,

Lori Podolak
Product Licensing Specialist
Regulatory Affairs Department

Enclosures:

- SAR Revision 9
- List of Affected Pages

List of Affected Pages	
Revision 1, November, 2001	Revision in entirety. This revision supercedes previously submitted SAR's for the 865.
Revision 2, January, 2003	Revision of Descriptive Drawings and minor modifications including Section 3.5 on device assessment regarding thermal testing and Sections 2.6 and 2.7 regarding actuator sleeves.
Revision 3, July 2003	Revision of Descriptive Drawings, Chapters 5 and 7 and minor modifications throughout to address heat output calculations.
Revision 4, July 24, 2003	Revised Section 7 to reference device drawing for package surveys.
Revision 5, August 27, 2003	Revision of Descriptive Drawings and reference to drawing revision level under Section 1.2.2.
Revision 6, September 10, 2003	Revision to Section 8 clarifying NDT as NDE (Non-destructive examination).
Revision 7, October 10, 2003	Revision to Section 8 providing additional clarification to maintenance requirements
Revision 8, March 6, 2006	Revision in entirety. This revision supercedes previously submitted SAR's for the 865. Change detail is contained in "Revision Description for the Model 865 SAR from Revision 7 to Revision March 2006"
Revision 9, 24 August 2006	Revisions to Table of contents pagination, pages 2-1, 2-19, 2-20, 2-27, 2-28, 2-31, 2-32, 2-37, 7-2, 7-3, 7-4, 8-1 and 8-2. Letter dated March 16, 1999 removed from Section 2.12.1. Change detail is contained in "Revision Description for the Model 865 SAR from Revision 8 to Revision 9"

Revision Description for the Model 865 SAR from Revision 8 to Revision 9

Section Reference	Page	Description
Table of Contents	i-v	Contents repaginated based on textual changes in document. Sections 2.12.1 through 2.12.4 page references based on separation page locations in SAR document.
2.1.4.2	2-1	Reference to ASME removed for consistency with drawing specification. Further words "safety critical" removed when referencing hardware as all hardware on the 865 is considered safety critical.
2.6.1.3	2-19	Added justifications to section for compliance basis of referenced sections 2.4.1 and 2.7.4.3.
2.6.3	2-20	Corrected typographical error in ANSI pressure range.
2.6.11	2-27 & 2-28	Added Summary section.
2.7	2-28	Corrects Section reference for the summary table in this section.
2.7.1.5	2-31	Corrects table reference.
2.7.3.3	2-32	Corrects table reference.
2.7.4.5 & 2.7.4.6	2-37	Corrects Section 2.12 reference for the appendix containing the finite element analysis.
2.12.1	2-43	Letter dated March 16, 1999 from NRC removed from appendix documentation.
7.1.2.1.c.2	7-2	Step added for clarification of operation.
7.1.2.1.c.3	7-3	Step modified for clarification of operation.
7.1.3.2	7-3	Acceptance criteria modified to reference applicable regulation in 49 CFR.
7.2.1.2.a	7-3	Acceptance criteria modified to reference applicable regulation in 10 CFR 20.
7.2.1.2.c	7-4	Acceptance criteria modified to reference applicable regulation in 10 CFR 71.
7.2.1.2.d	7-4	Inspection criteria clarified to reference 865 and/or overpack if an overpack is used.
7.2.1.2.e	7-4	Requirement to inspect for seal wire re-instated.
8.1.1	8-1	Subsection identification corrected as applicable.
8.1.6	8-2	Modified to confirm profile performed using an approved source capsule.

Safety Analysis Report

QSA Global Inc.

Model 865
Type B(U) - 96
Transport Package

24 August 2006

Revision 9

Contents

SECTION 1 - GENERAL INFORMATION **1-1**

1.1 INTRODUCTION 1-1
1.2 PACKAGE DESCRIPTION 1-1
1.2.1 Packaging *1-1*
1.2.2 Containment System *1-3*
1.2.3 Contents *1-3*
1.2.4 Operational Features *1-4*
1.3 GENERAL REQUIREMENTS FOR ALL PACKAGES 1-4
1.3.1 Minimum Package Size *1-4*
1.3.2 Tamper-Indicating Feature *1-4*
1.4 APPENDIX: DRAWINGS OF THE MODEL 865 TRANSPORT PACKAGE. 1-5

SECTION 2 - STRUCTURAL EVALUATION **2-1**

2.1 DESCRIPTION OF STRUCTURAL DESIGN 2-1
2.1.1 Discussion *2-1*
2.1.2 Design Criteria *2-1*
2.1.3 Weight and Centers of Gravity *2-1*
2.1.4 Identification of Codes and Standards for Package Design *2-1*
2.2 MATERIALS 2-2
2.2.1 Material Properties and Specifications *2-2*
2.2.2 Chemical, Galvanic or Other Reactions *2-3*
2.2.3 Effects of Radiation on Materials *2-3*
2.3 FABRICATION AND EXAMINATION 2-3
2.3.1 Fabrication *2-3*
2.3.2 Examination *2-4*
2.4 LIFTING AND TIE-DOWN STANDARDS FOR ALL PACKAGES 2-4
2.4.1 Lifting Devices *2-4*
2.4.1.1 Section Properties *2-4*
2.4.1.1.1 Tubular Handle *2-4*
2.4.1.1.2 Flat Bar *2-5*
2.4.1.1.3 Connecting Welds *2-6*
2.4.1.2 Case 1 ..... *2-7*
2.4.1.3 Case 2 ..... *2-10*
2.4.1.4 Case 3 ..... *2-11*
2.4.2 Tie-Down Devices *2-12*
2.4.2.1 Design Assumptions *2-13*
2.4.2.2 Design Forces *2-14*
2.4.2.3 Calculation of General Case of Tie-Down *2-14*
2.4.2.3.1 Input information *2-14*
2.4.2.3.2 Determination of Individual Tie-Down Forces *2-15*
2.4.2.4 Maximum load on handle *2-17*
2.5 GENERAL CONSIDERATIONS 2-18
2.5.1 Evaluation by Test *2-18*
2.5.2 Evaluation by Analysis *2-18*
2.6 NORMAL CONDITIONS OF TRANSPORT 2-18
2.6.1 Heat *2-18*
2.6.1.1 Summary of Pressures and Temperatures *2-18*
2.6.1.2 Differential Thermal Expansion *2-19*
2.6.1.3 Stress Calculations *2-19*

2.6.1.4 Comparison with Allowable Stresses *2-19*
2.6.2 Cold *2-19*
2.6.3 Reduced External Pressure *2-19*
2.6.4 Increased External Pressure *2-20*
2.6.5 Vibration *2-21*
2.6.6 Water Spray *2-21*
2.6.7 Free Drop *2-22*
2.6.7.1 Top Down Orientation *2-22*
2.6.7.2 Side Drop Orientation *2-23*
2.6.9 Compression *2-25*
2.6.10 Penetration *2-26*
2.6.10.1 Cover Bolt Impact *2-26*
2.6.10.2 Shell Impact *2-27*
2.6.11 Summary *2-27*
2.7 HYPOTHETICAL ACCIDENT CONDITIONS OF TRANSPORT 2-28
2.7.1 Free Drop *2-29*
2.7.1.1 End Drop *2-29*
2.7.1.2 Side Drop *2-29*
2.7.1.3 Corner Drop *2-30*
2.7.1.4 Oblique Drops *2-30*
2.7.1.5 Summary of Results *2-30*
2.7.2 Crush *2-31*
2.7.3 Puncture *2-31*
2.7.3.1 Test Specimen TP84(A) *2-31*
2.7.3.2 Test Specimen TP84(B) *2-32*
2.7.3.3 Summary of Results *2-32*
2.7.4 Thermal *2-33*
2.7.4.1 Projector Weldment under Pressure Loading Induced by the Fire Test. *2-33*
2.7.4.2 Welded End Plates *2-34*
2.7.4.3 Thermal Analysis *2-35*
2.7.4.4 Summary of Pressures and Temperatures *2-36*
2.7.4.5 Differential Thermal Expansion *2-37*
2.7.4.6 Stress Calculations *2-37*
2.7.4.7 Comparison of Allowable Stresses *2-37*
2.7.5 Immersion - Fissile Material *2-37*
2.7.6 Immersion - All Packages *2-37*
2.7.7 Deep Water Immersion Test (for Type B Packages Containing More than 10^5 A_2) *2-38*
2.7.8 Summary of Damage *2-38*
2.8 ACCIDENT CONDITIONS FOR AIR TRANSPORT OF PLUTONIUM 2-42
2.9 ACCIDENT CONDITIONS FOR FISSILE MATERIAL PACKAGES FOR AIR TRANSPORT 2-42
2.10 SPECIAL FORM 2-42
2.11 FUEL RODS 2-42
2.12 APPENDIX 2-42
2.12.1 Test Plan 84 Rev 1 (March 1999). *2-43*
2.12.2 Test Plan 84 Report Minus Appendix A (March 2000). *2-44*
2.12.3 Model 865 Finite Element Analysis (June 2000). *2-45*

SECTION 3 - THERMAL EVALUATION **3-1**

3.1 DESCRIPTION OF THERMAL DESIGN 3-1
3.1.1 Design Features *3-1*
3.1.2 Content's Decay Heat *3-1*
3.1.3 Summary Tables of Temperatures *3-1*
3.1.4 Summary Tables of Maximum Pressures *3-1*
3.2 MATERIAL PROPERTIES AND COMPONENT SPECIFICATIONS 3-2

3.2.1 Material Properties *3-2*
3.2.2 Component Specifications *3-2*
3.3 GENERAL CONSIDERATIONS 3-3
3.3.1 Evaluation by Analysis *3-3*
3.3.2 Evaluation by Test *3-3*
3.3.3 Margins of Safety *3-3*
3.4 THERMAL EVALUATION FOR NORMAL CONDITIONS OF TRANSPORT 3-3
3.4.1 Heat and Cold *3-3*
3.4.2 Maximum Normal Operating Pressure *3-8*
3.4.3 Maximum Thermal Stresses *3-8*
3.5 THERMAL EVALUATION UNDER HYPOTHETICAL ACCIDENT CONDITIONS 3-8
3.5.1 Initial Conditions *3-8*
3.5.2 Fire Test Conditions *3-9*
3.5.3 Maximum Temperatures and Pressure *3-9*
3.5.4 Maximum Thermal Stresses *3-9*
3.5.5 Accident Conditions for Fissile Material Packages for Air Transport *3-9*
3.6 APPENDIX 3-9

SECTION 4 – CONTAINMENT 4-1

4.1 DESCRIPTION OF THE CONTAINMENT SYSTEM 4-1
4.1.1 Containment Boundary *4-1*
4.1.2 Special Requirements for Plutonium *4-1*
4.2 GENERAL CONSIDERATIONS 4-1
4.2.1 Type A Fissile Packages *4-1*
4.2.2 Type B Packages *4-1*
4.3 CONTAINMENT UNDER NORMAL CONDITIONS OF TRANSPORT (TYPE B PACKAGES) 4-1
4.4 CONTAINMENT UNDER HYPOTHETICAL ACCIDENT CONDITIONS (TYPE B PACKAGES) 4-2
4.5 LEAKAGE RATE TESTS FOR TYPE B PACKAGES 4-2
4.6 APPENDIX 4-2

SECTION 5 - SHIELDING EVALUATION 5-1

5.1 DESCRIPTION OF SHIELDING DESIGN 5-1
5.1.1 Design Features *5-1*
5.1.2 Summary Table of Maximum Radiation Levels *5-1*
5.2 SOURCE SPECIFICATION 5-3
5.2.1 Gamma Source *5-3*
5.2.2 Neutron Source *5-3*
5.3 SHIELDING MODEL 5-3
5.3.1 Configuration of Source and Shielding *5-3*
5.4 SHIELDING EVALUATION 5-3
5.4.1 Methods *5-3*
5.4.2 Input and Output Data *5-3*
5.4.3 Flux-to-Dose-Rate Conversion *5-5*
5.4.4 External Radiation Levels *5-5*
5.5 APPENDIX 5-5

SECTION 6 - CRITICALITY EVALUATION 6-1

SECTION 7 – PACKAGE OPERATIONS 7-1

7.1 PACKAGE LOADING 7-1
7.1.1 Preparation for Loading *7-1*
7.1.1.1 Authorized Package Contents *7-1*

7.1.1.2 Packaging Maintenance and Inspection Prior to Loading *7-1*
7.1.2 Loading of Contents *7-2*
7.1.3 Preparation for Transport *7-3*
7.2 PACKAGE UNLOADING 7-3
7.2.1 Receipt of Package from Carrier *7-3*
7.2.2 Removal of Contents *7-4*
7.3 PREPARATION OF EMPTY PACKAGE FOR TRANSPORT 7-5
7.4 OTHER OPERATIONS 7-5
7.4.1 Package Transportation By Consignor *7-5*
7.4.2 Emergency Response *7-6*
7.5 APPENDIX 7-6

SECTION 8 - ACCEPTANCE TESTS AND MAINTENANCE PROGRAM 8-1

8.1 ACCEPTANCE TEST 8-1
8.1.1 Visual Inspections and Measurements *8-1*
8.1.2 Weld Examinations *8-1*
8.1.3 Structural and Pressure Tests *8-1*
8.1.4 Leakage Tests *8-2*
8.1.5 Component and Material Tests *8-2*
8.1.6 Shielding Tests *8-2*
8.1.7 Thermal Tests *8-2*
8.1.8 Miscellaneous Tests *8-2*
8.2 MAINTENANCE PROGRAM 8-2
8.2.1 Structural and Pressure Tests *8-2*
8.2.2 Leakage Tests *8-3*
8.2.3 Component and Material Tests *8-3*
8.2.4 Thermal Tests *8-3*
8.2.5 Miscellaneous Tests *8-3*
8.3 APPENDIX 8-4

SECTION 9 – IAEA TS-R-1 1996 EDITION (REVISED) REQUIREMENTS NOT OTHERWISE ADDRESSED – SECTION VI 9-1

9.1 GENERAL PACKAGE DESIGN REQUIREMENTS 9-1
9.2 REQUIREMENTS FOR TYPE A PACKAGES (REQUIRED BY TS-R-1 PARAGRAPH 650) 9-2
9.3 REQUIREMENTS FOR TYPE B(U) PACKAGES 9-2
9.4 APPENDIX 9-2

List of Tables

TABLE 1.2A: MODEL 865 PACKAGE INFORMATION 1-1
TABLE 2.2A: MECHANICAL PROPERTIES OF PRINCIPAL SAFETY RELATED 2-2
TABLE 2.7A: SUMMARY TABLE OF TEMPERATURES 2-36
TABLE 2.7B: SUMMARY TABLE OF MAXIMUM PRESSURES 2-36
TABLE 2.7C: SUMMARY OF DAMAGES DURING TEST PLAN 84 2-38
TABLE 3.1A: SUMMARY TABLE OF TEMPERATURES 3-1
TABLE 3.1B: SUMMARY TABLE OF MAXIMUM PRESSURES 3-2
TABLE 3.2A: THERMAL PROPERTIES OF PRINCIPAL TRANSPORT PACKAGE MATERIALS 3-2
TABLE 3.4A: INSOLATION DATA 3-5
TABLE 5.1A: MODEL 865 TEST UNIT TP84(A) AFTER TRANSPORT TESTING 5-2
TABLE 5.1B: MODEL 865 TEST UNIT TP84(B) AFTER TRANSPORT TESTING 5-2
TABLE 7.1A: MODEL 865 PACKAGE INFORMATION 7-1

List of Figures

FIGURE 1.2A: MODEL 865 RADIOGRAPHIC EXPOSURE DEVICE 1-3
FIGURE 2.4A: HANDLE CROSS SECTION 2-4
FIGURE 2.4B: FLAT BAR CROSS-SECTION. 2-5
FIGURE 2.4C: WELD CROSS-SECTION. 2-6
FIGURE 2.4D: WELD DIMENSIONS. 2-6
FIGURE 2.4E: LIFTING CASE 1. 2-7
FIGURE 2.4F: FORCE SYSTEM APPLIED TO HANDLE. 2-8
FIGURE 2.4G: LIFTING CASE 2. 2-10
FIGURE 2.4H: LIFTING CASE 3. 2-11
FIGURE 2.4I: FORCE SYSTEM APPLIED TO FLAT BAR LINKS. 2-11
FIGURE 2.4J: GENERAL CASE OF TIE-DOWN. 2-13
FIGURE 2.4K: RESULTANT FORCE ON LINK WELD. 2-17
FIGURE 2.6A - MODEL 865 (TP84(A)) 1.2 M DROP TEST ORIENTATION 2-23
FIGURE 2.6B - MODEL 865 (TP84(B)) 1.2 M DROP TEST ORIENTATION 2-24
FIGURE 2.6C - MODEL 865 COMPRESSION TEST ORIENTATION 2-25
FIGURE 2.6D - MODEL 865 TP84(A) PENETRATION TEST ORIENTATION 2-26
FIGURE 2.6E - MODEL 865 TP84(B) PENETRATION TEST ORIENTATION 2-27
FIGURE 2.7A - MODEL 865 (TP84(A)) 9 M DROP TEST ORIENTATION – END DROP 2-29
FIGURE 2.7B - MODEL 865 (TP84(B)) 9 M DROP TEST ORIENTATION – SIDE DROP 2-30
FIGURE 2.7C - MODEL 865 (TP84(A)) PUNCTURE TEST ORIENTATION 2-32
FIGURE 3.4A: MODEL OF CYLINDRICAL PACKAGE FOR HEAT ANALYSIS 3-4
FIGURE 5.1A: PROFILE ORIENTATION FOR THE MODEL 865 5-1
FIGURE 5.4.2.A. SAMPLE SURFACE CORRECTION FACTOR DISTANCE CRITERIA 5-5

Section 1 - GENERAL INFORMATION

1.1 Introduction

The Model 865 is designed as industrial radiography device and transport package for Type B quantities of special form radioactive material. It conforms to the Type B(U)-96 criteria for packaging in accordance 10 CFR 71, 49 CFR 173, and the IAEA Regulations for the Safe Transport of Radioactive Material (TS-R-1) which were in effect at the time of sign-off of this report.

1.2 Package Description

(Reference:

- *10 CFR 71.33*
- *IAEA TS-R-1, paragraph 220 & 807)*

The Model 865 package is constructed in accordance with the drawings included in Section 1.4. The package measures approximately 12 ¼ inches (311 mm) long by 7 5/8 inches (194 mm) in diameter. The general package information is shown in Table 1.2a:

Table 1.2a: Model 865 Package Information

Identification	Nuclide	Form	Maximum Capacity[1]	Chemical/ Physical Form	Maximum Content Weight	Maximum Decay Heat[3]	Maximum DU Weight	Maximum Package Weight
865	Ir-192	Special Form[2] Sources	240 Ci	Metal	< 1 gram	4.8 Watts	42 lbs (19 kg)	60 lbs (27 kg)

[1] Maximum Activity for Ir-192 is defined as output Curies as required in ANSI N432 and 10 CFR 34.20 and in line with TS-R-1 and Rulemaking by the USNRC and the USDOT published in the Federal Register on 26 January 2004.

[2] Special Form is defined in 10 CFR 71, 49 CFR 173, and IAEA TS-R-1.

[3] Maximum decay heat for Ir-192 is calculated by correcting the output activity to content activity. A factor of 2.3 is used for Ir-192 to account for source capsule and self-absorption in this conversion.

1.2.1 Packaging

Except for the shield assembly, fill foam and some components of the lock assembly, all materials of construction are stainless steels. The major components of the package consist of the following:

- Tungsten source rod and stainless steel source capsule holder
- Stainless steel projector weldment
- Depleted Uranium shield
- Locking assembly
- Actuator Guard and Shipping Cover
- Stainless steel tubular handle
- Folded stainless steel feet

The package consists of a stainless steel cylindrical housing (projector weldment) which contains a depleted uranium shield onto which two brass support rings are fitted. The shield is secured in position by locating the brass support rings into a rabbet machined into two stainless steel plates welded onto each end of the cylindrical housing. It is prevented from rotating by an offset stainless steel pin extending from the lower shield collar through to the shield. The brass rings also prevent a eutectic reaction between the steel and uranium at elevated temperatures.

The depleted uranium shield provides the primary radiation protection for the Model 865. When the source is in the shielded position, the shield limits the transmission of gamma rays to a maximum dose level of 200 mR/hr at the package surface and 10 mR/hr at one meter from the surface of the package.

The Model 865 radioactive source assembly contains a special form source capsule contained within a source rod. Actuation of the source rod and movement of the source is accomplished by pneumatic actuation.

The package is key operated to prevent unauthorized personnel from actuating the source rod. The unit can only be locked when the source assembly is in the shielded storage position. During transportation the actuator and lock assembly is protected by a stainless steel shipping cover which is bolted to the container weldment and fitted with seal wires for evidence of tampering. The container incorporates a positive visual indication of source position. This is accomplished by means of a rod, which emerges from the actuating cylinder as the source is exposed. The emergent length of the rod indicates the position of the source. When the source is in its fully shielded storage position the rod is no longer visible. The source rod is spring actuated to the shielded position when at rest.

The Model 865 is fitted with two folded stainless steel feet welded to the cylindrical container weldment which allow the unit to be stabilized on a flat or large cylindrical surface. To assist in lifting the unit there is a stainless steel tubular handle, again fixed to the projector weldment. The handle is suitable for manual or mechanical lifting and may assist in securing the package during transportation, as may the feet.

The external surfaces of the Model 865 are smooth stainless steel and are easily decontaminated. Because the Model 865 is designed for underwater use, there are no materials, which will degrade due to short-term exposure to water.

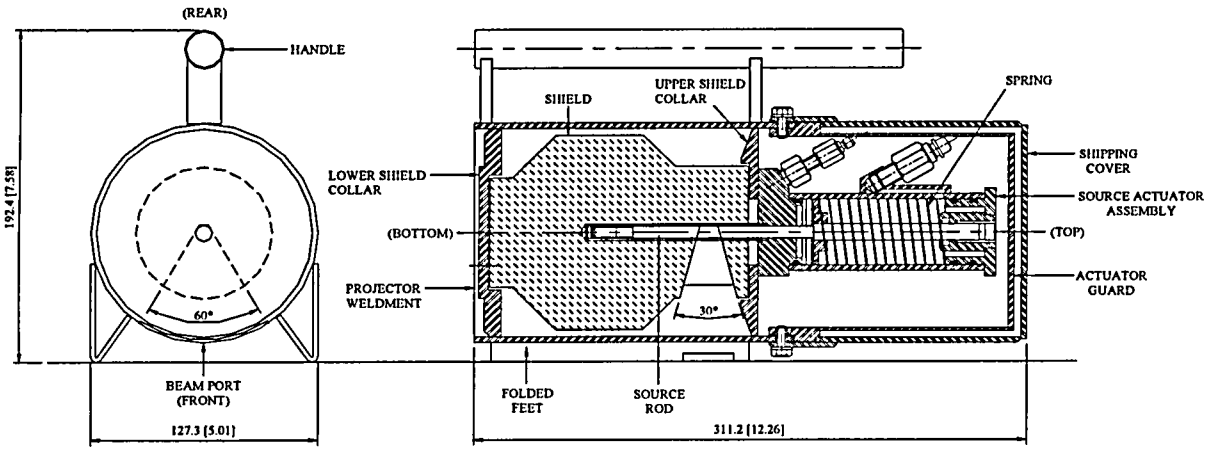

Figure 1.2a: Model 865 Radiographic Exposure Device

1.2.2 Containment System

(Reference:

- *10 CFR 71.33(a)(4)*
- *IAEA TS-R-1, paragraph 213 and 501(b))*

The locking assembly on the Model 865 transport package is shown on the drawing included in Section 1.4. The lock assembly secures the source rod with source capsule within the package during transport. The radioactive material of the source is sealed in a special form source capsule.

The containment system for the Model 865 transport package is the radioactive source capsule referred to in Section 4.1 of this Safety Analysis Report. The source capsule transported in the 865 transport package is certified as special form radioactive material under 10 CFR Part 71, USDOT regulations in 49 CFR and the IAEA Regulations for the Safe Transport of Radioactive Material (TS-R-1).

1.2.3 Contents

(Reference:

- *10 CFR 71.33(b)*
- *IAEA TS-R-1, Section IV & paragraph 807(a))*

The Model 865 transport package is designed to transport a special form capsule containing Ir-192. The maximum decay heat for Ir-192 in Table 1.2a has been adjusted to account for content activity of the source. Actual content to output activity varies based on the capsule configuration as well as variations in isotope self-absorption. A factor of 2.3 was used for Ir-192 to convert output activity to content activity as this factor reflects the worst case variation for Ir-192 sources transported in this package. The source capsule is loaded into the Model 865 device and secured according to the procedure described in Section 7.

The maximum weight of the source is also listed in Table 1.2a. The content weight value is calculated based on the package capacity and the lowest specific activity of Ir-192 (200 Ci/gram) used in source production for these devices.

Note: Ir-192 of higher specific activity can be used but this would produce sources with lower total mass of the contents. The value listed in the Table 1.2a are the maximum content masses.

1.2.4 Operational Features

This package does not involve complex containment systems for source securement. The source for this package is a special form, welded capsule. The source rod assembly is held securely in the device by components of the source actuator assembly attached to the upper shield collar. The lock plunger on the source actuator assembly engages the source rod and prevents it from moving the source to the exposed position during transport.

When the Model 865 device is prepared for transport,

- the source rod is in the fully shielded position,
- the lock plunger is engaged in the locked, secured position by a key lock,
- an actuator guard is installed over the actuator assembly and
- a shipping cover is secured over the actuator guard to further protect the actuator assembly during transport.

1.3 General Requirements for All Packages

1.3.1 Minimum Package Size

(Reference:
- *USNRC, 10 CFR 71.43(a)*
- *USDOT, 49 CFR 173.412(b)*
- *IAEA TS-R-1, paragraph 634)*

The package measures approximately 12 ¼ inches (311 mm) long by 7 5/8 inches (194 mm) in diameter. Therefore, it exceeds the minimum package size requirements specified in the referenced regulations.

1.3.2 Tamper-Indicating Feature

(Reference:
- *USNRC, 10 CFR 71.43(b)*
- *USDOT, 49 CFR 173.412(a)*
- *IAEA TS-R-1, paragraph 635)*

Two bolts which secure the shipping cover of the Model 865 package to the body of the device, are seal wired to provide a tamper indicating seal for the package. This seal wire is not readily breakable, therefore if it is broken during transport, it serves as evidence of possible unauthorized access to the contents.

1.4 **Appendix:** Drawings of the Model 865 transport package.

Section 1.4 Appendix: Drawings of the Model 865 transport package.

FIGURE WITHHELD UNDER 10 CFR 2.390

ERF #	APPROVALS	DATE
669		27 Aug 03
		27 Aug 03

UNLESS OTHERWISE SPECIFIED
DIMENSIONS IN INCHES
TOLERANCES:

FRACTIONAL	±1/16
X.X	±0.1
X.XX	±0.01
X.XXX	±0.005
Xmm	± ½ mm
X.Xmm	±0.1mm

PART NAME	QTY.	MATERIAL	DESCRIPTION

ABATECHNOLOGY
QSA
40 NORTH AVE, BURLINGTON, MA 01803

DESCRIPTIVE DRAWING

TITLE MODEL 865 TYPE B PROJECTOR DESCRIPTIVE ASSEMBLY

SIZE	DWG. NO.	REV
B	R86590	F
	SCALE: NONE	SHEET 1 OF 8

FIGURE WITHHELD UNDER 10 CFR 2.390

AEATECHNOLOGY QSA 40 NORTH AVE, BURLINGTON, MA 01803		DESCRIPTIVE DRAWING
TITLE	MODEL 865 TYPE B PROJECTOR DESCRIPTIVE ASSEMBLY	
SIZE B	DWG. NO. R86590	REV F
	SCALE: NONE / SHEET 2 OF 8	

FIGURE WITHHELD UNDER 10 CFR 2.390

AEATECHNOLOGY QSA 40 NORTH AVE, BURLINGTON, MA 01803		DESCRIPTIVE DRAWING
TITLE	MODEL 865 TYPE B PROJECTOR DESCRIPTIVE ASSEMBLY	
SIZE B	DWG. NO. R86590	REV F
	SCALE: NONE	SHEET 3 OF 8

FIGURE WITHHELD UNDER 10 CFR 2.390

AEATECHNOLOGY QSA 40 NORTH AVE, BURLINGTON, MA 01803			DESCRIPTIVE DRAWING
TITLE	MODEL 865 TYPE B PROJECTOR DESCRIPTIVE ASSEMBLY		
SIZE B	DWG. NO. R86590		REV F
	SCALE: NONE	SHEET 4 OF 8	

FIGURE WITHHELD UNDER 10 CFR 2.390

AEATECHNOLOGY QSA 40 NORTH AVE, BURLINGTON, MA 01803		DESCRIPTIVE DRAWING	
TITLE	MODEL 865 TYPE B PROJECTOR DESCRIPTIVE ASSEMBLY		
SIZE B	DWG. NO. R86590		REV F
	SCALE: NONE	SHEET 5 OF 8	

FIGURE WITHHELD UNDER 10 CFR 2.390

AEA TECHNOLOGY QSA 40 NORTH AVE, BURLINGTON, MA 01803		DESCRIPTIVE DRAWING	
TITLE	MODEL 865 TYPE B PROJECTOR DESCRIPTIVE ASSEMBLY		
SIZE B	DWG. NO. R86590		REV F
	SCALE: NONE	SHEET 6 OF 8	

FIGURE WITHHELD UNDER 10 CFR 2.390

AEA TECHNOLOGY QSA 40 NORTH AVE, BURLINGTON, MA 01803		DESCRIPTIVE DRAWING	
TITLE	MODEL 865 TYPE B PROJECTOR DESCRIPTIVE ASSEMBLY		
SIZE B	DWG. NO. R86590		REV F
	SCALE: NONE	SHEET 7 OF 8	

FIGURE WITHHELD UNDER 10 CFR 2.390

AEATECHNOLOGY
QSA
40 NORTH AVE, BURLINGTON, MA 01803

DESCRIPTIVE DRAWING

TITLE	MODEL 865 TYPE B PROJECTOR DESCRIPTIVE ASSEMBLY		
SIZE B	DWG. NO. R86590		REV F
	SCALE: NONE	SHEET 8 OF 8	

Section 2 - STRUCTURAL EVALUATION

This section identifies and describes the principal structural engineering design of the packaging, components, and systems important to safety and compliance with the performance requirements of 10 CFR Part 71.

2.1 Description of Structural Design

(Reference:

- *10 CFR 71.33(a)*
- *IAEA TS-R-1, paragraph 220 & 807(b))*

2.1.1 Discussion

The Model 865 transport package is described in Section 1.2.

2.1.2 Design Criteria

The Model 865 transport package is designed to comply with the requirements for Type B(U) packaging as prescribed by 10 CFR 71 and IAEA TS-R-1. All design criteria are evaluated by a straightforward application of the appropriate section of 10 CFR 71 or IAEA TS-R-1.

2.1.3 Weight and Centers of Gravity

The transport package weighs a maximum of 60 lbs (27 kg). The center of gravity of the 865 transport package is located along the cylindrical axis of the package at a distance of 3.4 inches (86 mm) above the bottom surface.

2.1.4 Identification of Codes and Standards for Package Design

2.1.4.1 Package Design

See Section 2.1.2 relating to design criteria of the package. No specific codes or standards were directly incorporated in the design effort of the finished assembly for the 865 transport package. However the design was based on the Type A and Type B(U) container requirements of 49 CFR, 10 CFR 71 and IAEA regulations in effect at the time of the package component design.

2.1.4.2 Fabrication & Assembly

All container fabrication (including assembly) is controlled under the QSA Global Inc. Quality Assurance Plan approved by the USNRC and ISO. All welding under this plan adheres to AWS standards appropriate to the materials and designs fabricated. All hardware meets ASME-B18 standards. All external fabrication deemed critical to safety is either verified to equivalent in-house standards or dedicated as appropriate for use prior to release as part of this transport package.

2.1.4.3 Maintenance & Use

Maintenance and use of this transport container is described in Sections 7 and 8.

2.2 Materials

(Reference:
- *10 CFR 71.33(a)(5)*
- *IAEA TS-R-1, paragraph 220 & 807(b))*

2.2.1 Material Properties and Specifications

Table 2.2a lists the relevant mechanical properties (at ambient temperature) of the principal materials used in the Model 865 transport package. The location and use of these materials is shown on the drawings contained in Section 1.4. The reference for the table information is listed in the last column of the table.

Table 2.2a: Mechanical Properties of Principal Safety Related Transport Package Materials

Material	Tensile Strength	Yield Strength	Source
Depleted Uranium	65 kpsi	30 kpsi	Reference #2
Stainless Steel	75 kpsi	30 kpsi	Reference #1, page 854
Tungsten	265-590 ksi	NA	Reference #3, page 20.12
Bronze	27-119 ksi	13-68 ksi	Reference #4, page 535
Brass	34-68 ksi	12-30 ksi	Reference #4, page 535

Resource references:

1. American Society for Metals. Metals Handbook, Volume 1, Tenth Edition. Ohio: Materials Park, 1990.

2. Lowenstein, Paul. *Industrial Uses of Depleted Uranium.* American Society for Metals. Metals Handbook, Volume 3, Ninth Edition.

3. Boyer et.al., Metals Handbook Desk Edition, ASM.

4. J.R. Davis, Metals Handbook Desk Edition, 2nd Edition ASM International.

2.2.2 Chemical, Galvanic or Other Reactions

(Reference:
- *USNRC, 10 CFR 71.43(d)*
- *IAEA TS-R-1, paragraph 613 and 642)*

The materials used in the construction of the Model 865 are listed in Table 2.2a of this SAR. The Model 865 is designed to be submersed in water. Seawater, in particular, may act as an electrolyte and assist the process of bimetallic corrosion.

The bimetallic corrosion of phosphor bronzes and tin bronzes in contact with austenitic stainless steel may be quite severe in a marine environment; particularly if the area of stainless steel is large compared to the area of bronze. However, the two metals are only in contact within the projector weldment, which is sealed against water ingress by rubber O-ring seals, which form part of the actuator assembly. Crevice corrosion occurs typically between nuts and washers or around the thread of a screw or the shank of a bolt. Crevices can also occur in welds, which fail to penetrate, and under deposits or films on the steel surface. Type 304 stainless steel has a critical crevice temperature below -2.5°C and is therefore susceptible to crevice corrosion. The Model 865 units, which are used in an environment where chloride is present, particularly a marine offshore application, are checked during maintenance procedures for signs of corrosion. (See Chapter 8.) These units have been used by radiographers in the USA since 1984 with no evidence of significant corrosion occurring from use which would adversely effect the package ability for safe transport.

To prevent the possible formation of a eutectic alloy of stainless steel and depleted uranium at elevated temperatures, brass spacers have been used. The spacers are located between the depleted uranium shield and stainless steel projector weldment.

2.2.3 Effects of Radiation on Materials

(Reference:
- *USNRC, 10 CFR 71.43(d)*
- *IAEA TS-R-1, paragraph 613)*

Depleted uranium, tungsten, steel, bronze and brass have been used in this package as well as other transport packaging for decades without degradation of the package performance over time due to irradiation from the package contents.

2.3 Fabrication and Examination

(Reference:
- *10 CFR 71.33(a)(5)*
- *IAEA TS-R-1, paragraph 232, 310, 638 and 807(b))*

2.3.1 Fabrication

Package components are procured, manufactured and inspected for use under QSA Global Inc. NRC approved QA Program Number 0040.

2.3.2 Examination

Section 8 describes the acceptance testing and routine maintenance requirements for package components used on the Model 865 package.

2.4 Lifting and Tie-Down Standards for All Packages

2.4.1 Lifting Devices

(Reference:

- *USNRC, 10 CFR 71.45(a)*
- *IAEA TS-R-1, paragraphs 502(b), 606, 607 and 608)*

The Model 865 is a portable device, which is designed to be lifted manually or with mechanical assistance by its tubular handle. It is reasonable to assume that no other part or method of lifting will be used. The lifting analysis will therefore focus on the ability of the tubular handle and connecting welds to resist the applied loads. All elements must remain within yield when subjected to the weight of the Model 865 with a factor of safety of three. The mass of the Model 865 is 60 lbs. (27 kg), therefore the applied load is 3×27×9.81 = 795 N.

2.4.1.1 Section Properties

2.4.1.1.1 Tubular Handle

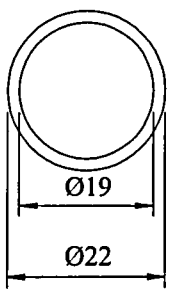

Figure 2.4a: Handle Cross Section

Design strength, $p_y = Y_{0.2} = 210 \text{N/mm}^2$ where $Y_{0.2}$ is 0.2% proof stress for grade 304 stainless steel

Gross area, $A_g = \frac{\pi}{4} \times \left(22^2 - 19^2\right) = 97 \text{mm}^2$

Second moment of area, $I = \frac{\pi}{64} \times \left(22^4 - 19^4\right) = 5{,}102 \text{mm}^4$

Section modulus, $Z = \frac{I}{22/2} = 464 \text{mm}^3$

Radius of gyration, $r = \sqrt{\frac{I}{A}} = 7.3\,\text{mm}$

2.4.1.1.2 Flat Bar

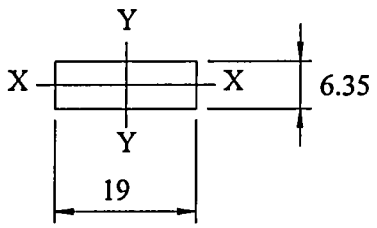

Figure 2.4b: Flat Bar Cross-section.

Design strength, $p_y = Y_{0.2} = 210\,\text{N/mm}^2$

Gross area, $A_g = 19 \times 6.35 = 121\,\text{mm}^2$

Second moment of area,

$$I_{xx} = \frac{19 \times 6.35^3}{12} = 405\,\text{mm}^4$$

$$I_{yy} = \frac{6.35 \times 19^3}{12} = 3{,}630\,\text{mm}^4$$

Section modulus,

$$Z_{xx} = \frac{405}{6.35/2} = 128\,\text{mm}^3$$

$$Z_{yy} = \frac{3630}{19/2} = 382\,\text{mm}^3$$

Radius of Gyration,

$$r_x = \sqrt{\frac{I_{xx}}{A}} = 1.8\,\text{mm}$$

2.4.1.1.3 Connecting Welds

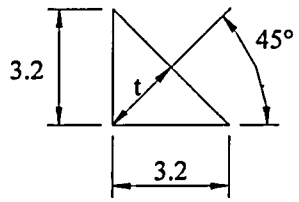

Figure 2.4c: Weld cross-section.

Throat thickness, $t = \frac{3.2}{\sqrt{2}} = 2.25\,\text{mm}$

From reference 1, the design strength of the weld may be taken as:

$p_w = 0.46U_s$

where,

minimum UTS of gr.304 stainless steel, $U_s = 500\ \text{N/mm}^2$

$\therefore p_w = 230\ \text{N/mm}^2$

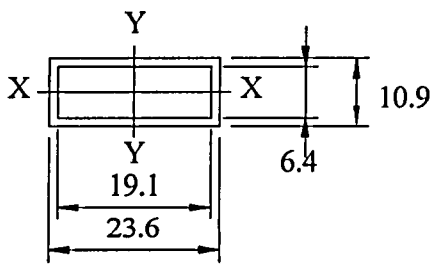

Figure 2.4d: Weld Dimensions.

Area of weld, $A_w = (23.6 \times 10.9) - (19.1 \times 6.4) = 135\,\text{mm}^2$

Second moment of area of weld, $I_{xx} = \frac{23.6 \times 10.9^3}{12} - \frac{19.1 \times 6.4^3}{12} = 712\,\text{mm}^4$

Modulus of weld, $Z_{xx} = \frac{I_{xx}}{10.9/2} = 391\,\text{mm}^3$

2.4.1.2 Case 1

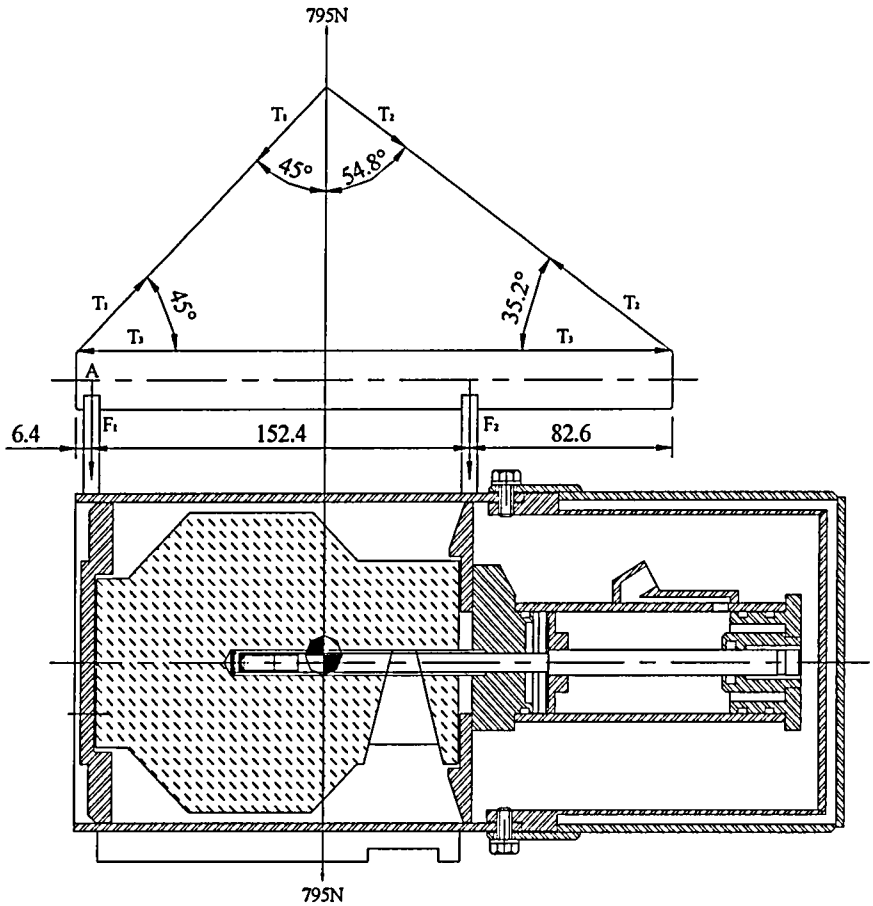

Figure 2.4e: Lifting Case 1.

$$T_1\cos 45° + T_2\cos 54.8° = 795\text{ N}.....(1)$$

$$T_1\cos 45° = T_3.....(2)$$

$$T_2\cos 35.2° = T_3.....(3)$$

(2) & (3) into (1)

$$T_3 + \frac{T_3\cos 55°}{\cos 35°} = 795\text{N}$$

$$T_3 = \frac{795}{\left[1 + \frac{\cos 55°}{\cos 35^0}\right]} = 468\text{N}$$

Therefore, substituting back into (2) & (3), $T_1 = 662$ N and $T_2 = 571$ N

Now,

$$F_1 + F_2 = 795 \text{ N.....(4)}$$

Taking moments about A,

$$152.4 \times F_2 + 6.4 \times T_1 \sin 45° = (152.4 + 82.6) \times T_2 \sin 35.2° \text{.....(5)}$$

Substituting for T_1 and T_2 into (5) and rearranging,

$$F_2 = (235 \times 571 \times \sin 35° - 6.4 \times 662 \times \sin 45°)/152.4$$

$$= 487 \text{ N}$$

Substituting F_2 into (4)

$$F_1 = 795 - 487$$

$$= 308 \text{ N}$$

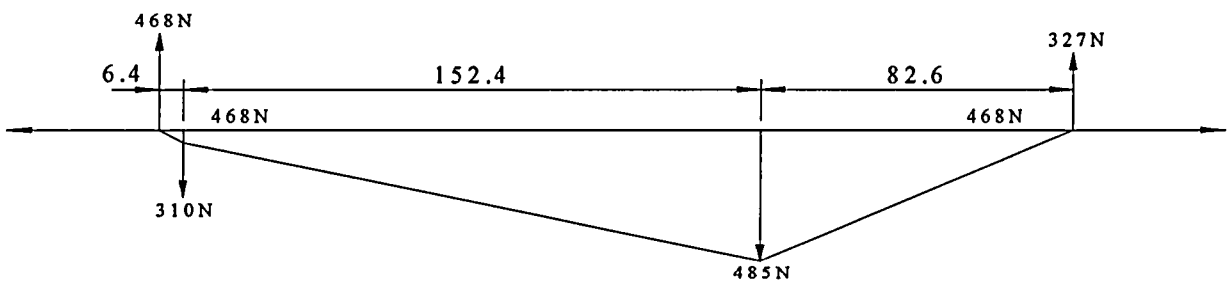

Figure 2.4f: Force System Applied to Handle.

Applied compression force, $T_3 = 468$ N

Effective length, $L_E = 2L = 2 \times 82.6 = 166$ mm

Slenderness, $\lambda = L_E/r = 166/7.3 = 23$

Compression capacity of tube, $P_c = \chi \beta_c A_g p_y$

Where,

$$\beta_c = 1, \text{ for plastic, compact or semi-compact sections}$$
$$\overline{\alpha} = 0.49$$
$$\overline{\lambda_0} = 0.40$$
$$\chi = 1$$

Therefore,

$$P_c = 1 \times 1 \times A_g P_y$$
$$= 97 \times 210$$
$$= 20{,}370 \text{ N} > 468 \text{ N}$$

Applied bending moment, $M = (327 \times 83) + (468 \times 9.5)$

$= 31{,}587$ Nmm

Moment capacity, M_c $= P_y Z$

$= 210 \times 464$

$= 97{,}440 \text{ Nmm} > 31{,}587 \text{ Nmm}$

Combined bending and compression stress check

$$\frac{F}{Pc} + \frac{M}{Mc} = 1$$

$$\frac{468}{20{,}370} + \frac{31{,}587}{98{,}440} = 0.35 < 1$$

Conclusion: The handle does not yield when the Model 865 is lifted with the aid of an attachment in the orientation shown in case 1.

2.4.1.3 Case 2

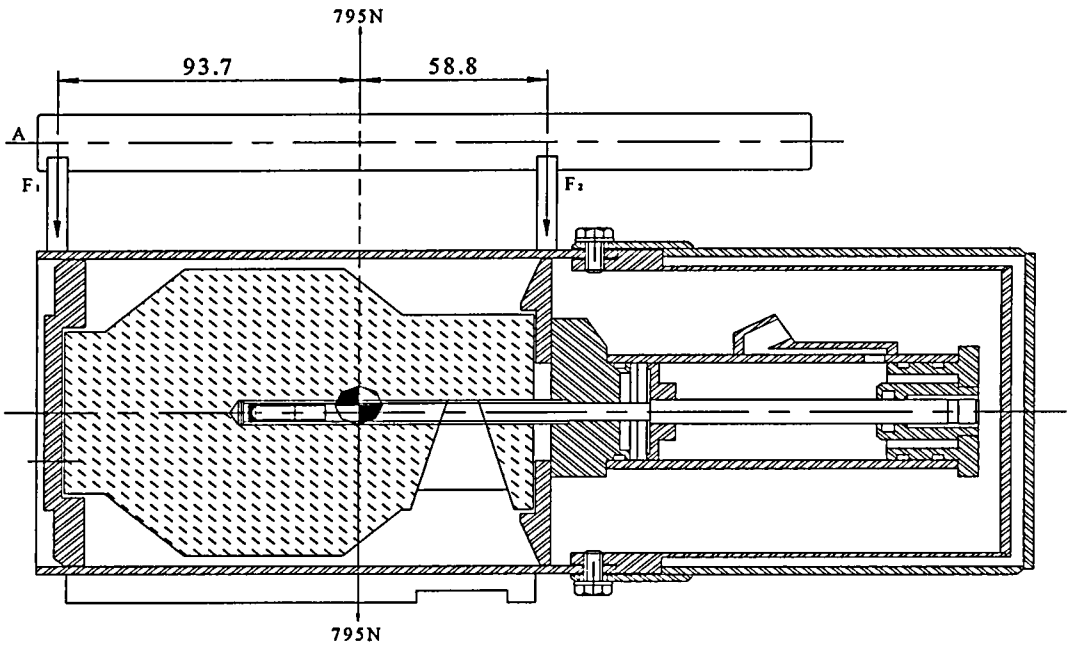

Figure 2.4g: Lifting Case 2.

$F_1 + F_2 = 795$ N.....(1)

Taking moments about A,

$795 \times 93.7 = 152.5F_2$

$F_2 = 488$ N.....(2)

Substituting (2) into (1)

$F_1 = 795 - 488$

$= 307$ N

Maximum applied moment, $M = 307 \times 93.7$

$= 28{,}766$ Nmm < 98,440 Nmm

From reference 1, Section 4.2,

Tension capacity of flat bar, $P_t = A_g p_y$

$= 121 \times 210$

$= \quad 25{,}410\ N > 488\ N$

Tension capacity of weld, $P_{tw} = A_w p_w$

$= 135 \times 230$

$= 31{,}050N > 488\ N$

Conclusion: All elements of the handle are within yield capacity. A single weld group is capable of resisting the applied load in tension without yielding.

2.4.1.4 Case 3

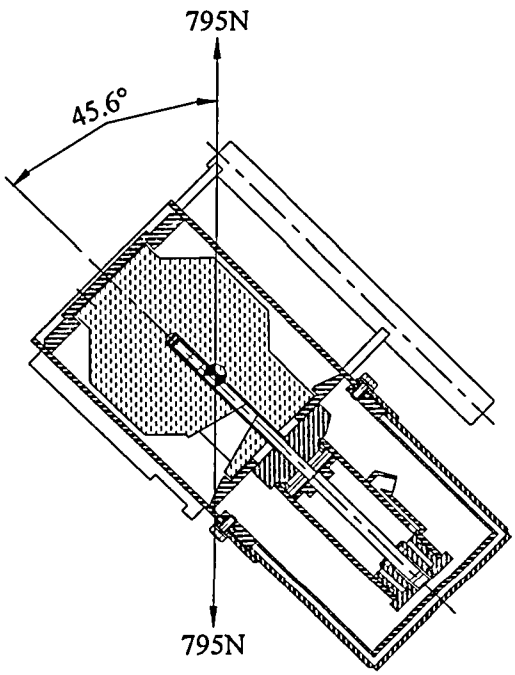

Figure 2.4h: Lifting Case 3.

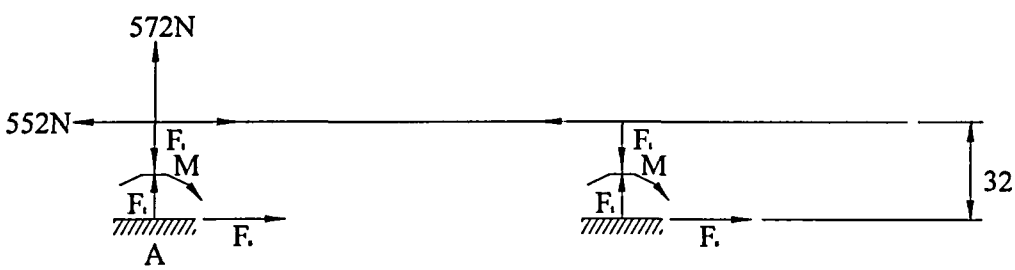

Figure 2.4i: Force System Applied to Flat Bar Links.

Section and weld most heavily stressed at Point A

Applied tensile load, F_t = 795sin46°
= 572 N

Tensile stress on weld = F_t/A_w
= 572/135
= 4.3 N/mm^2

Applied shear load, F_s = 795cos46°/2
= 276 N

Shear stress on weld = 276/135
= 2.1 N/mm^2

Applied bending moment, M = ½×552×32
= 8,832 Nmm

Applied bending stress = 8,832/391
= 22.6 N/mm^2

Maximum combined stress on weld = $\sqrt{((22.6 + 4.3)^2 + 2.1)}$
= 27 N/mm^2 < 230 N/mm^2

Conclusion: The lifting force is applied to the flat bar and connecting weld both of which have been demonstrated above to be within yield.

From the analysis contained in this section, the lifting device complies with the requirements of 10 CFR 71.45(a).

2.4.2 Tie-Down Devices

(Reference:

- *USNRC, 10 CFR 71.45(b) (1) (2) (3)*
- *IAEA TS-R-1, paragraph 606 and 636)*

The following design analysis calculates the minimum tension required in the tie-down lashings to achieve a no-slip condition and to prevent overturning without the requirement for chocks.

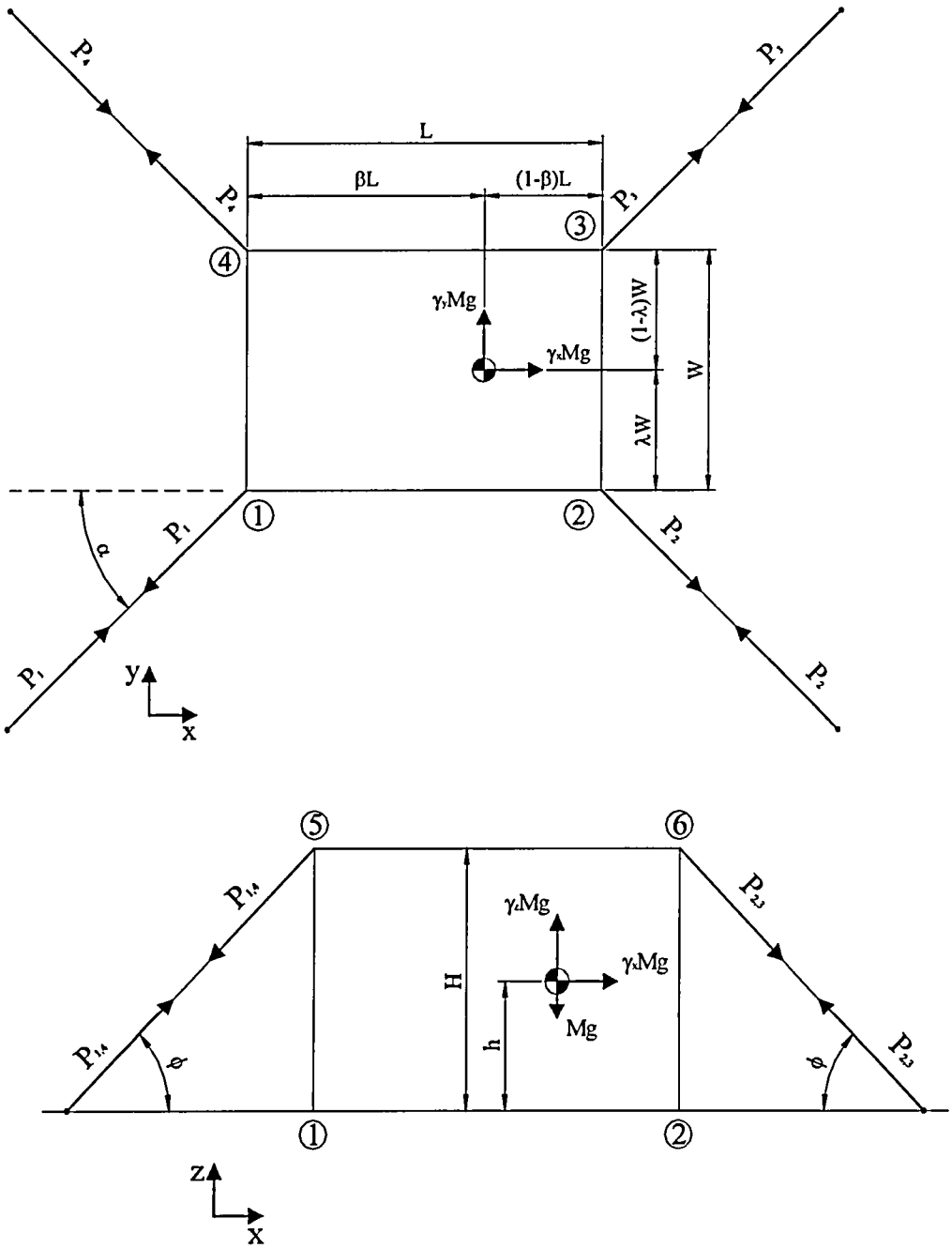

Figure 2.4j: General Case of Tie-Down.

2.4.2.1 Design Assumptions

(i) The coefficient of friction between the package and transport bed is known.
(ii) The center of gravity of the package is known.
(iii) All lashings are independent.

2.4.2.2 Design Forces

All applied forces are assumed to act through the center of gravity of the package and are resolved into components along the three orthogonal axes shown in Fig. 2.11. The applied forces are determined by calculating the product of the given acceleration and the total mass of the package.

Tie-down members 1 & 4 resist acceleration a_x, therefore, $P_{1x} = P_{4x}$
Tie-down members 1 & 2 resist acceleration a_y, therefore, $P_{1y} = P_{2y}$
All tie-down members resist acceleration a_z, therefore, $P_{1z} = P_{2z} = P_{3z} = P_{4z}$

The maximum tension will occur in tie-down 1:

$$P_1 = P_{1x} + P_{1y} + P_{1z}$$

2.4.2.3 Calculation of General Case of Tie-Down

2.4.2.3.1 Input information

Acceleration factor in x-direction, γ_x	= 10
Acceleration factor in y-direction, γ_y	= 5
Acceleration factor in y-direction, γ_z	= 2
Height of attachment to package, H	= 0.14 m
Length of Package, L	= 0.153 m
Width of Package, W	= 0.127 m
Distance to center of gravity, βL	= 0.094 m
Distance to center of gravity, λW	= 0.0635 m
Height to center of gravity, h	= 0.078 m
Angle of tie-down, α	= 45 deg
Angle of tie-down, ϕ	= 45 deg
Coefficient of friction, μ (metal/metal)	= 0.2
Total mass of package, M	= 27 kg
β	= 0.61
λ	= 0.50

2.4.2.3.2 Determination of Individual Tie-Down Forces

Consider acceleration a_x

The package is subjected to a longitudinal acceleration a_x. The vertical components of the tension in the tie-down, which arise from the longitudinal acceleration, will generate a friction force between the package and the conveyance platform, which will oppose the applied force.

Vertical load imported to platform $= 2P_{1x}\sin\phi + Mg(1-\gamma_z)$

Horizontal load on package $= Ma_x$
$= 2P_{1x}\cos\phi\cos\alpha + \mu[2P_{1x}\sin\phi + Mg(1 - \gamma_z)]$

Rearranging, $P_{1x} = \dfrac{Mg[\gamma_x-\mu(1-\gamma_z)]}{2(\cos\phi\cos\alpha + \mu\sin\phi)}$

Tension in tie-down 1 to stop slip, P_{1x} = 2,106 N

Consider overturning about 2,3 due to acceleration a_x

$Mg\gamma_x h + Mg\gamma_z(1-\beta)L = 2P_{1x}H\cos\phi\cos\alpha + 2P_{1x}L\sin\phi + Mg(1-\beta)L$

Rearranging, $P_{1x} = \dfrac{Mg[\gamma_x h + (1-\beta)(\gamma_z-1)L]}{2[H\cos\phi\cos\alpha + L\sin\phi]}$

$= 624$ N

Consider spinning about 6,7 due to acceleration a_x. P_{1x} must be large enough to induce sufficient friction between the package and freight bed to prevent spinning of the package.

$\gamma Mg(H-h) + Mg(\gamma_z-1)\beta L = \mu H[2P_{1x}\sin\phi + Mg(1-\gamma_z)]$

Rearranging, $P_{1x} = \dfrac{Mg[\gamma_x(H-h) + (\gamma_z-1)(\beta L + \mu H)]}{2\mu H\sin\phi}$

$=$ **4,963 N**

Therefore, P_{1x} is governed by spinning about 6,7.

Similarly, considering acceleration a_y.

Vertical load imparted to platform $= 2P_{1y}\sin\phi + M(g-a_y)$

Horizontal load on package $= Mg\gamma_y$
$= 2P_{1y}\cos\phi\sin\alpha + \mu[2P_{1y}\sin\phi + Mg(1-\gamma_y)]$

Rearranging, $P_{1y} = \dfrac{Mg[\gamma_y - \mu(1-\gamma_z)]}{2(\cos\phi\sin\alpha + \mu\sin\phi)}$

Tension in tie-down 1 to stop slip, P_{1y} = 1,084 N

Consider overturning about 3,4 due to acceleration a_y.

$$Mg\gamma_y h + Mg\gamma_y(1-\lambda)W = 2P_{1y}H\cos\phi\sin\alpha + 2P_{1y}W\sin\phi + Mg(1-\lambda)W$$

Rearranging, $P_{1y} = \dfrac{Mg[\gamma_y h + (1-\lambda)(\gamma_z-1)W]}{2[H\cos\phi\sin\alpha + W\sin\phi]}$

$= 376$ N

Consider spinning about 7,8 due to acceleration a_y.

$$\gamma_y Mg(H-h) + Mg(\gamma_z-1)\lambda W = \mu H[2P_{1y}\sin\phi + Mg(1-\gamma_z)]$$

Rearranging, $P_{1y} = \dfrac{Mg[\gamma_y(H-h) + (\gamma_z-1)(\lambda W + \mu H)]}{2\mu H\sin\phi}$

$= \mathbf{2{,}686\ N}$

Therefore, P_{1y} is governed by spinning.

Finally, vertical acceleration a_z.

$$4P_{1z}\sin\phi = Mg(1-\gamma_z)$$

Rearranging, $P_{1z} = \dfrac{Mg(1-\gamma_z)}{4\sin\phi}$

$P_{1z} = \mathbf{94\ N}$

The individual tie-down forces are thus:

P_1	=	$P_{1x} + P_{1y} + P_{1z}$	=	**7,743 N**
P_2	=	$P_{1y} + P_{1z}$	=	**2,780 N**
P_3	=	P_{1z}	=	**94 N**
P_4	=	$P_{1x} + P_{1z}$	=	**5,057 N**

2.4.2.4 Maximum load on handle

It is assumed that P_1 and P_4 are attached to the package at the same point on handle.

Resultant Maximum Load on Handle = $|\mathbf{P_1} + \mathbf{P_4}|$
= 9,248 N

Angle of Resultant Load from x-axis = 191.9°

It is also assumed that P_2 and P_3 are attached to the package at the same point.

Resultant Load on Handle = $|\mathbf{P_2} + \mathbf{P_3}|$
= 2,781 N

Angle of Resultant Load from x-axis = 316.9°

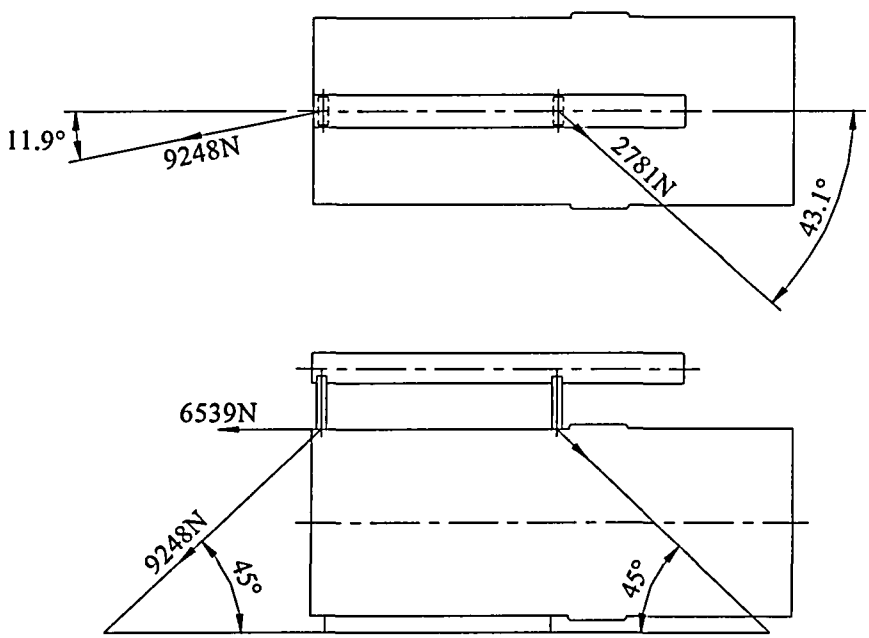

Figure 2.4k: Resultant Force on Link Weld.

The weld is subjected to a shear force equal to the horizontal resultant of the maximum tensile load from the tie-down system on an individual link;

Maximum horizontal resultant force = 9,248cos45°
= 6,539 N

$$\sigma_{sw} = 6{,}539/61 = 107\ N/mm^2 < 230\ N/mm^2$$

Therefore, the weld will not be subjected to stresses greater than the weld design strength in the tie-down case considered.

2.5 General Considerations

(Reference:
- *10 CFR 71.41(a)*
- *IAEA TS-R-1, paragraph 807(c))*

2.5.1 Evaluation by Test

Evaluations by direct testing are documented in Test Plan Report contained in Section 2.12.

2.5.2 Evaluation by Analysis

Evaluations by analysis are described in the section they apply to in this Safety Analysis Report or when applicable in Test Plan Report contained in Section 2.12.

2.6 Normal Conditions of Transport

2.6.1 Heat

(Reference:
- *USNRC, 10 CFR 71.71(c)(1)*
- *IAEA TS-R-1, paragraph 615, 617, 618, 637, 651, 662 and 664)*

The heat sources for the Model 865 transport package is listed in Table 1.2a. Iridium-192, releases approximately 8.6 milliwatts per Curie based on assuming a decay energy of 1.46 MeV/decay. The thermal evaluation for the heat test is described in Section 3.

2.6.1.1 Summary of Pressures and Temperatures

(Reference:
- *IAEA TS-R-1, paragraph 615 and 661)*

Table 2.6.1.a: Summary Temperatures Normal Transport

Temperature Condition	Model 865	Comments
Insolation (38°C in full sun)	99.5°C (211°F)	Section 3.4.1.1.
Decay Heating (38°C in shade)	44°C (111°F)	Section 3.4.1.2

As all components are vented to ambient, no pressure will build up in the package under Normal Transport conditions that would adversely effect package performance or integrity. Evaluation of pressures for this package are contained in Section 3.4.2 and summarized in Table 3.1.4.a.

2.6.1.2 Differential Thermal Expansion

Any thermal expansion encountered during Normal Transport will be insignificant with respect to the manufacturing tolerances for the components of this package.

2.6.1.3 Stress Calculations

Stress calculations for normal transport of this package are contained in Sections 2.4.1 and 2.7.4.3. Results of these calculations demonstrate that the package meets the requirements for Normal Transport.

Section 2.4.1 demonstrates that the package fabrication is satisfactory to meet the stress associated with the lifting requirements of 10 CFR 71.45(a). As this requirement is applicable to normal transport these stress calculations are referenced in Section 2.6.1.3 of the SAR.

Section 2.7.4.3 addresses the package ability to satisfactory withstand the thermal stresses generated under Hypothetical Accident Transport Conditions. Since the Hypothetical Accident Thermal Transport Conditions are more severe than the Normal Transport Thermal conditions and the package is compliant to the Hypothetical Accident conditions, by direct comparison the package will meet the thermal stresses generated under Normal Transport conditions.

2.6.1.4 Comparison with Allowable Stresses

The Model 865 package was fully tested and passed under Normal Conditions of transport. It is therefore concluded that the package will satisfy the performance requirements specified by the regulations.

2.6.2 Cold

(Reference:
- *USNRC, 10 CFR 71.71 (c)(2)*
- *IAEA TS-R-1, paragraph 615, 637 and 664)*

There are no components of the Model 865 that have increased susceptibility to failure by any mechanism at ambient temperatures of -40°C. Though the tungsten source rod can exhibit brittle tendencies, the reduction in temperature will not adversely affect the relative brittleness of the tungsten rod. Therefore it is concluded that the Model 865 transport package will withstand the normal transport cold condition.

2.6.3 Reduced External Pressure

(Reference:
- *USNRC, 10 CFR 71.71 (c)(3)*
- *IAEA TS-R-1, paragraph 643 & 619*

On 17 October 1983, a prototype Model 865 package was subjected to a reduced pressure test. The Model 865 package was installed in a pressure chamber. The pneumatic fittings of the exposure device were sealed. The pressure chamber was connected to a vacuum pump. The internal pressure in the chamber was reduced to 6.9 kPa absolute (1 psia). The exposure device was maintained at this reduced pressure for thirty minutes. The regulations call for a reduced pressure of 25 kPa absolute (3.6 psia).

At the conclusion of the test, the package was removed from the pressure chamber and examined. There was no evidence of any deformation or damage, no impairment of any design features and the package operated satisfactorily. A shielding efficiency test performed subsequent to the completion of the test demonstrated that this reduced pressure condition did not reduce the shielding efficiency of the package.

The authorized contents are special form source capsules that meet a minimum ISO 2919-1999 classification of Class 3 for pressure. This classification is more limiting than the reduced external pressure requirement as it covers 25 kN/m^2 to 2 MN kN/m^2. Therefore, the reduced external pressure requirements of 3.5 psi in 10 CFR, 8.7 psi (60 kPa) in 49 CFR and IAEA will not adversely affect the package containment.

Reference: ISO 2919-1999, Radiation Protection – Sealed radioactive sources - General requirements and classification.

2.6.4 Increased External Pressure

(Reference:

- *USNRC, 10 CFR 71.71(c)(4))*

On 4 October 1983, a prototype Model 865 package was subjected to an external pressure test. A standard Model 865 package was fitted with an adapter attached to the source position indicator and two electrical switches used to indicate the position of the source assembly. The Model 865 was installed in a pressure chamber and the pneumatic fittings of the container were attached to the actuation air supply. The electrical switches were connected to the source assembly position indication system. A supply of argon was connected to the pressure chamber for pressure control. The internal pressure in the chamber was monitored with a pressure gauge.

The pressure in the chamber was increased to 350 kPa (50 psig). At this pressure, the Model 865 container was actuated for 100 complete expose and retract cycles. Upon completion of the sequence, the pressure was increased to 690 kPa (100 psig) and the container was actuated for an additional 100 complete expose and retract cycles. This procedure was repeated, each time increasing the pressure in the chamber by 350 kPa (50 psig) until the pressure reached 2.49 Mpa (360 psig). With the container in an external pressure environment of 2.49 Mpa (360 psi), it was actuated for a total of 1,010 complete expose and retract cycles. The container remained in this external pressure environment for two hours.

At the conclusion of this test, the container was removed from the pressure chamber and examined. There was no evidence of any deformation or damage and no impairment of any design features. The container operated satisfactorily both during and after the external pressure test. A shielding efficiency test performed subsequent to the completion of the Model 865 test

program demonstrated that this external pressure condition did not reduce the shielding efficiency of the package.

In the event of failure of the package seal, the source capsule is relied upon to provide the radioactive containment, therefore it is evaluated for its ability to withstand this external pressure. The authorized contents are special form source capsules that meet a minimum ISO 2919-1999 classification of Class 3 for pressure which proves the capsules ability to withstand a pressure of 2 MN/m^2 abs (290 lb_f/in^2). Under failure of the packaging seal, the source capsule would withstand an external pressure of 25 kPa (17 psi). Therefore, the increased external pressure requirements of 20 psi in 10 CFR 71 will not adversely affect the package containment.

2.6.5 Vibration

(Reference:

- *USNRC, 10 CFR 71.71(c)(5)*
- *IAEA TS-R-1, paragraph 612)*

On 31 August 1983, a prototype Model 865 package was subjected to a vibration resistance test as prescribed in International Standard ISO 3999, Section 6.3. The test was performed by Associated Testing Laboratories, Inc., Burlington, MA.

The Model 865 was secured to the platform of a vibration machine. A resonant search was conducted within a maximum acceleration of 9.8 m/s^2 (lg) over the frequency range of 5 Hz to 80 Hz. No resonant frequency was found. The device was then vibrated with a maximum acceleration of 9.8 m/s^2 for seventy minutes at each of the following frequencies: 5Hz, 8Hz, 12Hz, 20Hz, 32Hz and 80Hz. At the conclusion of this test the package was removed from the vibration apparatus and examined.

There was no evidence of any deformation or damage and no impairment of any design features. There was no loosening of any fasteners. The package operated satisfactorily after the test. A shielding efficiency test performed subsequent to the completion of the vibration test demonstrated that there was no reduction in shielding efficiency of the package.

Since this test was performed, the Model 865 has been in active service for over 15 years. Over this period there has been no evidence of vibration induced failure. It is therefore concluded that the Model 865 package will withstand vibration normally incident to transport.

2.6.6 Water Spray

(Reference:

- *USNRC, 10 CFR 71.71(c)(6)*
- *IAEA TS-R-1, paragraph 719, 720 and 721)*

The Model 865 transport package is constructed of water-resistant materials throughout. Therefore, the water spray test would not reduce the shielding effectiveness or structural integrity of the package.

2.6.7 Free Drop

(Reference:

- *USNRC, 10 CFR 71.71(c)(7)*
- *IAEA TS-R-1, paragraph 722(a))*

The drop test pad used in the 1.2 m free drop, 9 m drop, and puncture tests consists of a monolithic concrete base 7.4 ft x 7.5 ft x 1.25 ft thick. The approximate weight of the concrete was 9,500 lbs. A 3.9 ft x 4 ft x 1 in thick steel plate was embedded in this concrete slab at the time of its construction. Before and after testing the drop pad was visually inspected for damage which could have a significant impact on package testing.

Two Model 865 test packages were subjected to a 1.2m free drop test as per Test Plan 84. The results of these tests are documented in Test Report 84 Report and demonstrate that the Model 865 maintains its structural integrity and shielding effectiveness under the Normal Conditions of Transport free drop test. Drop orientation impact locations for the 1.2 m free drop are shown in Figures 2.6a and 2.6b. The justification for these orientations is provided in Sections 2.6.7.1 through 2.6.7.3.

The Model 865 package maintained its structural integrity and shielding effectiveness under the normal transport drop test conditions and the package complies with the requirements of this section.

2.6.7.1 Top Down Orientation

The intent of this orientation was to challenge the shipping cover, actuator cover and cover bolts. If the cover can be removed in the drop test damage, may be caused to the actuator assembly and locking pin. The top down orientation was selected to cause removal or partial removal of the shipping cover and simultaneous failure of the locking pin and actuator assembly. Testing for this orientation (shown in Figure 2.6a) was performed on test specimen TP84(A).

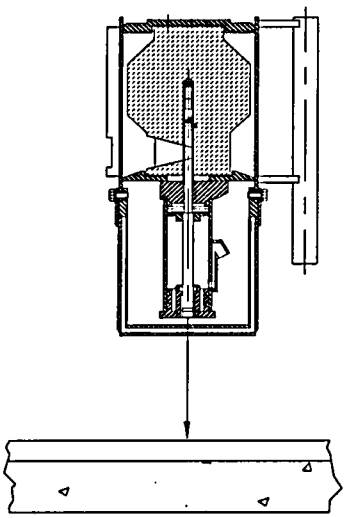

Figure 2.6a - Model 865 (TP84(A)) 1.2 m Drop Test Orientation Top Down Drop

Damage to TP84(A) was limited to impact witness marking on the top cover. As damage was minimal, this unit was used for further testing under the hypothetical accident conditions prior to package profiling. There was no significant change in the radiation profile of the test specimen after all testing including the 1.2 m (4 ft) drop test (See Section 5).

2.6.7.2 Side Drop Orientation

The intent of this test orientation was to cause damage to the locking mechanism and package weldment in an attempt to cause the source to be moved from the shielded position. Testing for this orientation (shown in Figure 2.6b) was performed on test specimen TP84(B).

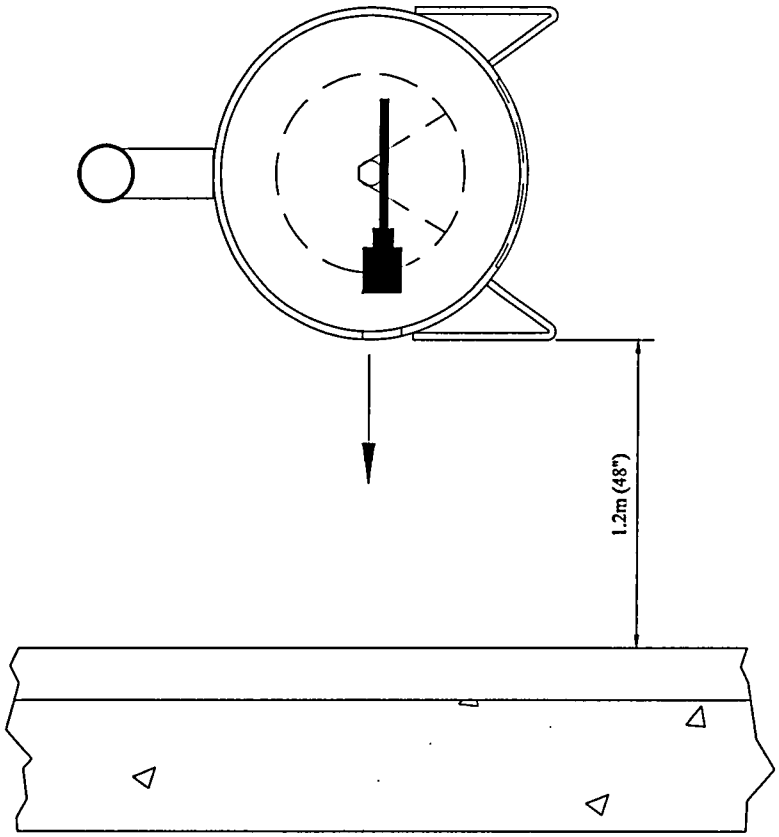

Figure 2.6b - Model 865 (TP84(B)) 1.2 m Drop Test Orientation Side Drop

Damage to TP84(B) was limited to a slight flattening of the cover at the point of impact. As damage was minimal, this unit was used for further testing under the hypothetical accident conditions prior to package profiling. There was no significant change in the radiation profile of the test specimen after all testing including the 1.2 m (4 ft) drop test (See Section 5).

2.6.8 Corner Drop

(Reference:

- *USNRC, 10 CFR 71.71(c)(8)*
- *IAEA TS-R-1, paragraph 722(b))*

This test is not applicable, as the transport package does not transport fissile material, nor is the exterior of the transport package made from either fiberboard or wood.

2.6.9 Compression

(Reference:

- *USNRC, 10 CFR 71.71(c)(9)*
- *IAEA TS-R-1, paragraph 723)*

Test Plan 84 Report (Section 2.12.2) documents that the two test specimens (TP84(A) and TP84(B)) were subjected to a combined compressive load of 649 lbs (294 kg) for a period of 24 hours (See Figure 2.6c). This load exceeded five times the maximum transport package weight of 60 lbs (27 kg). This load was also greater than 13 kPa (2 lb/in^2) multiplied by the vertically projected area of the transport package.

Following the test, no damage to the specimens was observed. Radiation profiles performed at the conclusion of the all testing showed no significant increase in radiation levels. The Model 865 package maintained its structural integrity and shielding effectiveness and demonstrated that the packages comply with the requirements of this section.

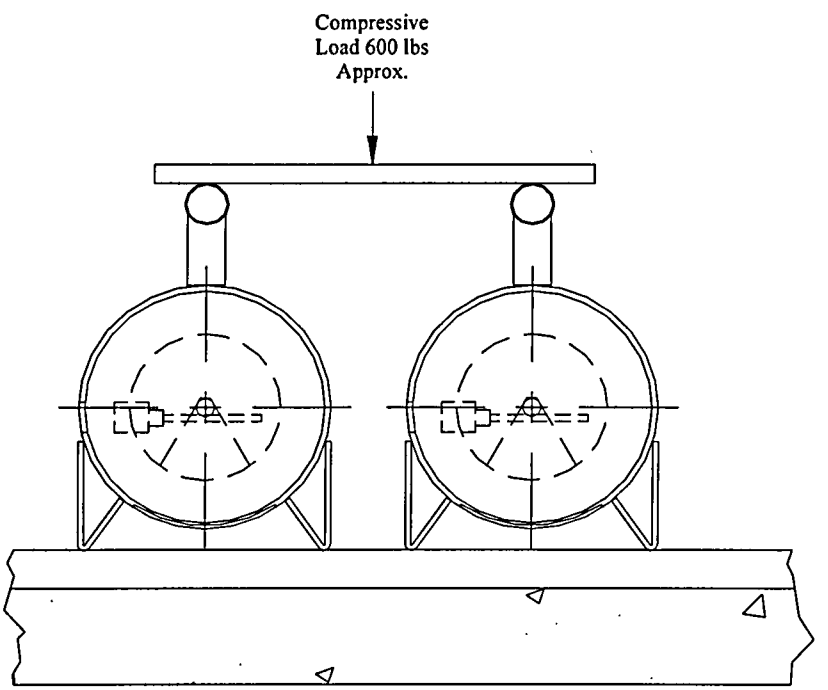

Figure 2.6c - Model 865 Compression Test Orientation

2.6.10 Penetration

(Reference:

- *USNRC, 10 CFR 71.71(c)(10)*
- *IAEA TS-R-1, paragraph 724)*

Test Plan 84 Report (Section 2.12.2) documents that the two test specimens (TP84(A) and TP84(B)) were subjected to the penetration test. Radiation profiles performed after all testing showed no significant increase in radiation levels. The Model 865 package maintained its structural integrity and shielding effectiveness and demonstrated that the packages comply with the requirements of this section.

2.6.10.1 Cover Bolt Impact

The intent of this orientation was to challenge the shipping cover by trying to damage one of the cover bolts. If the bolt is weakened or broken by the impact of the penetration bar the cover may become easier to displace in the following tests. Specimen TP84(A) was rigidly supported so that the penetration bar could be arranged to impact a bolt in such a way as to induce maximum shear stress in the bolt. Testing for this orientation (shown in Figure 2.6d) was performed on test specimen TP84(A).

The penetration bar impacted the specimen twice to achieve the intended impact point. Damage to the package was limited to a small witness mark on the bolt. No significant damage occurred to the specimen.

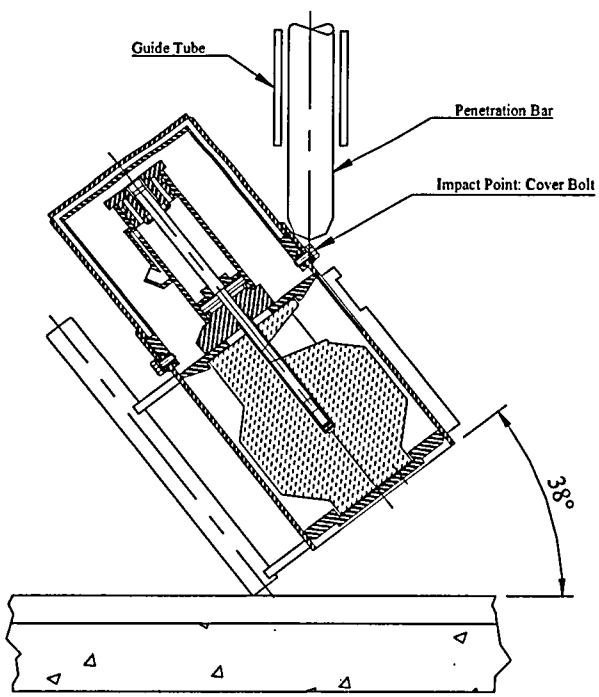

Figure 2.6d - Model 865 TP84(A) Penetration Test Orientation

2.6.10.2 Shell Impact

The intent of this orientation was to challenge target impact the beam port of the package weldment. Penetration of the package weldment might increase the external dose rate above regulatory limits. Specimen TP84(B) was placed on its handle and supported in this position so that the beam port faced upwards. Testing for this orientation (shown in Figure 2.6e) was performed on test specimen TP84(B).

The penetration bar impacted the specimen as intended leaving an indentation at the point of impact. No significant damage occurred to the specimen.

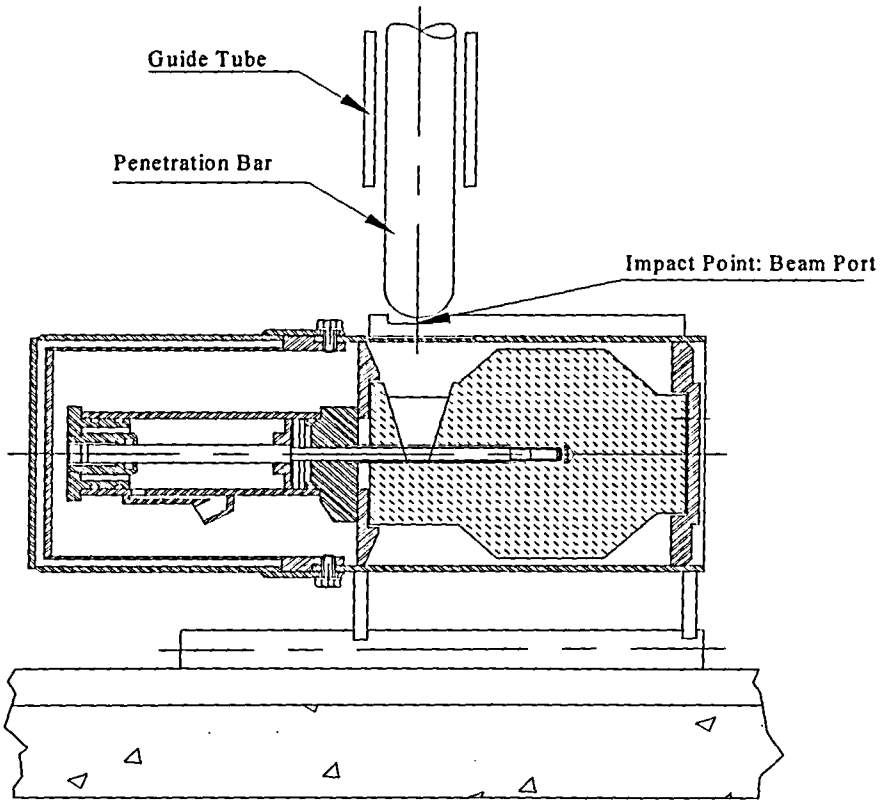

Figure 2.6e - Model 865 TP84(B) Penetration Test Orientation

2.6.11 Summary

Based on the physical tests performed on the Model 865 test packages it is concluded that the Model 865 transport package meets the Normal Conditions of Transport requirements. The post-test radiation profile showed no significant increase in radiation levels.

The Model 865 was tested for compliance to Type A and Type B requirements with the inclusion of stainless steel spacers surrounding the actuator head retaining bolts. These spacers are included on some units to prevent damage to the bolts during normal field use, however, some earlier units are not fitted with spacers.

Although the spacers do provide some protection to the bolts and would minimally strengthen the entire actuator assembly, the use of these spacers would have no affect on the outcome of the previous Type A and Type B testing performed under Test Plan 84. The device's ability to pass, specifically the drop testing, is independent of the sleeves or the bolts.

During testing, the source rod broke at the 0.170 diameter section. This break disconnected the forward part of the source rod containing the source capsule from the section within and attached to the acutator assembly. The forward part of the source rod was still contained within the device by the locking mechanism which is welded to the device housing and not dependent on the integrity of the actuator assembly bolts. The locking mechanism remained undamaged throughout the testing.

Even if the entire actuator assembly sheared off, the source would not move and would remain shielded. As such, any alterations, such as the addition or absence of sleeves over the bolts will not degrade the device's ability to maintain containment and shielding of the source. Final profiling of the device after Type A and Type B testing indicated a maximum dose at 1 meter of 0.7 mR/hr. Removal of the actuator assembly and the additional shielding it provides would not substantially increase this dose rate at 1 meter and would still be well below the limit of 1,000 mR/hr specified by the regulations.

2.7 Hypothetical Accident Conditions of Transport

(Reference:

- *USNRC, 10 CFR 71.73*
- *IAEA TS-R-1, paragraph 726)*

Sections 2.7.1 through 2.7.5 summarize evaluations and testing for the hypothetical accident conditions of transport tests. Section 2.7.8 summarizes the results of this testing.

Two (2) test specimens were used to conduct the hypothetical accident tests. Testing was performed after the test specimens had undergone the testing in Section 2.6 for Normal Conditions of transport. Detailed description of this testing is contained in Test Plan 84 Report (Section 2.12.2).

2.7.1 Free Drop

(Reference:

- *USNRC, 10 CFR 71.73(c)(1)*
- *IAEA TS-R-1, paragraph 727(a))*

Justification for all test unit drop orientations are included in Test Plan 84 (Section 2.12.1).

2.7.1.1 End Drop

This orientation was used for Test Specimen TP84(A) and the orientation is shown in Figure 2.7a. The test specimen impact point was intended to be flat on the top of the lid. This specimen was dropped twice to try and achieve this orientation. It was observed that due to the center of gravity on the device, the package tended to rotate slightly during the drop and therefore a flat drop on the top end of the package could not be achieved.

This unit was dropped twice from a distance of 9 m (30 ft) and it was determined that the combined damage to the unit in the two 9 m (30 ft) drops was more extensive than would occur in a single flat end drop. The cumulative damage caused a local buckling of the shipping cover and slight deformation of two of the cover bolts. There was no other significant damage to the test specimen.

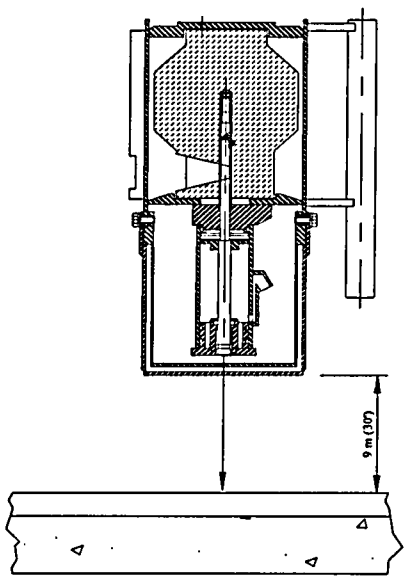

Figure 2.7a - Model 865 (TP84(A)) 9 m Drop Test Orientation – End Drop

2.7.1.2 Side Drop

This orientation was used for Test Specimen TP84(B) and the orientation is shown in Figure 2.7b. Impact was made on the left side of the package in an attempt to break the lock mechanism. The test specimen impacted as intended and caused a slight flattening of the package weldment along the line of impact.

There was no other signs of damage to the specimen.

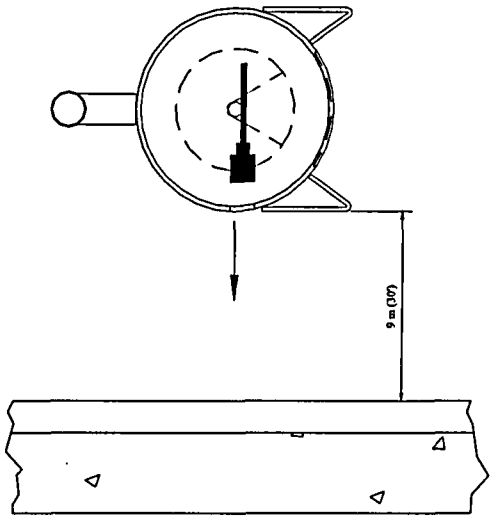

Figure 2.7b - Model 865 (TP84(B)) 9 m Drop Test Orientation – Side Drop

2.7.1.3 Corner Drop

The corner drop was not specifically performed, however the results of the end drop described in Section 2.7.1.1 indicate that this drop orientation would not have produced greater damage than was seen in specimen TP84(A).

2.7.1.4 Oblique Drops

The oblique drop was not performed. In an oblique drop, the energy generated at impact would be distributed across the initial and secondary impact surfaces causing deformation in either the cover/actuator guard or the folded feet of the unit. This type of impact will produce less force at the initial impact location and the force from the secondary impact will cause secondary deformations without contributing to damage which could result in container failure.

Unlike the End and Side drops described in Sections 2.7.1.1 and 2.7.1.2, an oblique drop is less likely to cause a container failure by the mechanisms identified in Test Plan 84 (Section 2.12.1). These included Fracture or penetration of the package weldment, displacement of the shield within the weldment and distortion or fracture of the source, or removal/damage of the shipping cover and simultaneous failure of the locking pin and actuator assembly.

2.7.1.5 Summary of Results

(Reference:

- *USNRC, 10 CFR 71.73(a) and (b)*
- *IAEA TS-R-1, paragraph 726)*

See Table 2.7c for additional test unit results summary. In all cases, radiation profiles performed at the conclusion of all testing showed no significant increase in radiation levels for the test units and demonstrated that the 865 packages comply with the requirements of this section.

2.7.2 Crush

(Reference:

- *USNRC, 10 CFR 71.73(c)(2)*
- *IAEA TS-R-1, paragraph 727(c))*

Not applicable. This package is not used for the Type B transport of normal form radioactive material.

2.7.3 Puncture

(Reference:

- *USNRC, 10 CFR 71.73(c)(3)*
- *IAEA TS-R-1, paragraph 727(b))*

The puncture bar is a 6 inch diameter x 12 inch long, mild steel solid bar attached to a 12 inch x 12 inch x ½ inch thick mild steel base. The bar is attached to the base with a ¼ inch circumferential fillet weld. The puncture bar is attached to the drop test pad steel plate by four stainless steel bolts. Justification for all test unit puncture orientations are included in Test Plan 84 (Section 2.12.1) and results are summarized in the Sections 2.7.3.1 and 2.7.3.2.

2.7.3.1 Test Specimen TP84(A)

Test Specimen TP84(A) impacted the puncture bar to continue the damage inflicted on the specimen by the 9m (30 foot) drop test and to continue to challenge the cover bolts (see Figure 2.7c). The unit hit as intended hitting the cover bolt and causing a secondary impact on the shell and leg of the package. This caused some deformation of the leg, but the unit was fully intact after the impact with no broken or missing parts event externally.

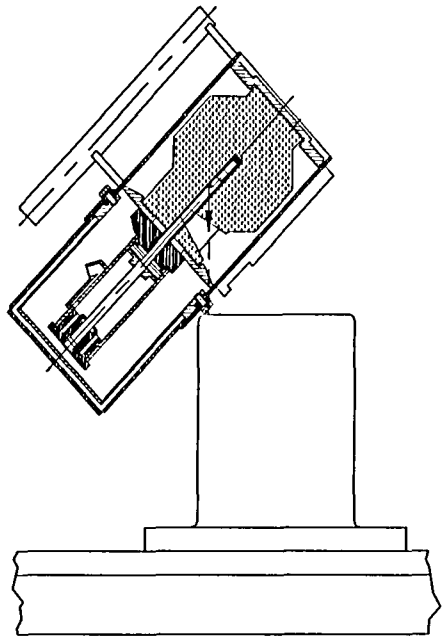

Figure 2.7c - Model 865 (TP84(A)) Puncture Test Orientation Cover Bolts of the Package

2.7.3.2 Test Specimen TP84(B)

Test Specimen TP84(B) was dropped three times onto the puncture billet. The first drop orientation was onto the beam port. During the first drop the test unit rotated after hitting the legs such that the beam port did not strike the puncture billet. The second drop test was performed to achieve impact onto the beam port and was successful. The test specimen was dropped a third time impacting the lock assembly. Following all three drop tests, the device was complete with no broken or missing parts.

2.7.3.3 Summary of Results

(Reference:

- *USNRC, 10 CFR 71.73(a) and (b)*
- *IAEA TS-R-1, paragraph 726)*

See Table 2.7c for additional test unit results summary. A more detailed summary is given in Test Plan 84 Report (Section 2.12.2). The package weldments remained intact showing no signs of tearing or fracturing. The shell weldment was only minimally deformed in one specimen and the deformation was insufficient to allow movement of the shield or source. In all cases, radiation profiles performed at the conclusion of the puncture testing showed no significant increase in radiation levels for the test units and demonstrated that the 865 package complies with the requirements of this section.

2.7.4 Thermal

(Reference:

- *USNRC, 10 CFR 71.73(c)(4)*
- *IAEA TS-R-1, paragraph 651 through 655, and 728)*

Two calculations were performed to determine the ability of the Model 865 to pass the fire test. One is described in the following paragraphs while the other is contained in Section 2.12.3. The Appendix 2.12.3 calculation will be summarized in Section 3.5.

Review of the condition of the test specimens after the drop tests suggests the fire test would have no affect on the resulting radiation measurements if the thermal test was performed. This is justified based on the condition of the test specimens after the drop tests and the properties of the materials used to secure and shield the source within the specimens.

Consideration of the principle materials of manufacture and the melting points indicate that the 865 would not fail causing shield integrity to be impaired. Additionally, the structure of the device is such that the degradation of mechanical properties of the materials of construction will not have a detrimental effect on the stability of the device under temperature.

Failure may only be contemplated by a build up of pressure within the assemblies that contain a trapped volume of air. The projector weldment is such an assembly being predominately a stainless steel welded construction. However, the brass source tube is silver soldered in position and at a temperature of 607°C (880°K) the silver solder will melt and the trapped gases will vent.

2.7.4.1 Projector Weldment under Pressure Loading Induced by the Fire Test.

Assuming the weldment was assembled at 1 bar atmospheric pressure and 20°C (293°K), the internal gas pressure inside the weldment will be (880/293)×1 bar = 3 bar just before the venting process begins.

From reference 1, ¶ 3.5.1.2, the minimum thickness of the cylinder under internal pressure is given by:

$$e = pD_o/(2f + p)$$

where

p = design pressure

D_o = outside diameter of weldment

f = nominal design stress

From reference 2, the 0.1% proof stress for grade 304 stainless steel at 600°C is 123 N/mm^2 and from reference 1, page 2/40 note (c), f = 0.1% proof stress/1.35.

Therefore, $f = 123/1.35$

$$= \quad 91 \text{ N/mm}^2 \text{ (13.2 ksi)}$$

Therefore

$$e = \frac{(3-1)\times10^{-1}\times127}{(2\times91)+(3-1)\times10^{-1}}$$

$$= 0.139 \text{ mm}$$

The nominal thickness of beam port = 1.46 mm, therefore the weldment will not fail due to pressures generated during the thermal test.

2.7.4.2 Welded End Plates

The upper shield collar has the narrowest section of the two end plates. The collar has a through hole directly on its center line. Reference 1, para 3.5.5.2 indicates that where an opening exists, the thickness of the end plate should be reinforced dependent upon plate and hole diameters and hole position. Consideration of the Model 865 design shows that the collar is reinforced over a much larger diameter than that of the through hole by the actuator base sub-assembly which is welded to the collar. The effect of the central through hole is thus mitigated. In this design the weakest section occurs where the collar meets the projector weldment and the collar can be considered as a flat end and the following analysis is applicable.

From reference 1, para 3.5.5.2, the minimum thickness of the end plate is given by:

$e = CD\sqrt{(p/f)}$, where D is the mean diameter of the cylinder weldment

$$p/f = \frac{(3-1)\times10^{-1}}{91}$$

$$= 0.0022$$

$$e_{cylo} = pD/2f$$

$$= \frac{(3-1)\times10^{-1}\times(127-3.048)}{2\times91}$$

$$= 0.136 \text{ mm}$$

$$e_{cyl} = 1.46 \text{ mm}$$

$$e_{cyl}/e_{cylo} = 10.7$$

C = 0.56 from reference 1, Figure 3.5-33.

Thus,

$$e = 0.56 \times 123.952 \sqrt{(2 \times 10^{-1}/91)}$$

= 3.25 mm < minimum thickness of end plate = 4.3 mm, therefore the weldment will not fail due to pressures generated during the thermal test.

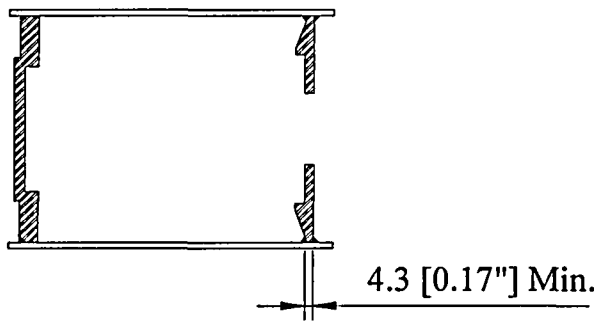

Figure 2.7d: Section Through Projector Weldment.

References:

1. BS 5500:1997 Issue 1, January 1997. Specification for Unfired Fusion welded pressure vessels.
2. High-Temperature Properties of Stainless Steel for Building Structures. Journal of Structural Engineering/April 1998/399. By Y.Sakumoto, T.Nakazato, and A.Matsuzaki.

2.7.4.3 Thermal Analysis

Damage to the outer containment was not sufficient to increase oxygen ingress to the shield or build up pressure within the assembly (See Sections 2.7.4.1 and 2.7.4.2). Prior to reaching the thermal test temperature, the container will be vented to the atmosphere relieving any internal generation or expansion of gases created by the elevated temperatures.

Because no damage occurred during the Hypothetical Accident Conditions of Transport Tests that could result in oxidation of the DU shield, thermal testing was not performed on any of the 865 test specimens. Specifically there were no openings in the container that could result in oxidation of the DU shield. Damage incurred during the drop testing (4 foot, 30 foot and puncture) was minimal, consisting of insignificant deformation of the weldments, actuator block and cover. There were no holes or tears in the cylinder weldment to allow air to circulate through the package. None of the damage significantly increased, or created new, pathways for the ingress of oxygen.

Without the possibility of gross shield oxidation, and subsequent shield degradation, failure under the thermal test conditions would require mechanical degradation of the packages' support structure. The Model 865 support structure is of welded stainless steel construction which will prevent shield movement.

The internal support structure for the test specimen shields was intact and fully functional. The internal support structure consists of the shield, cylinder weldment, and welded endplates. The source was undamaged and secured in the shielded position. The source assembly consists of the source capsule and source rod secured by the actuator assembly.

Since there were no openings in the Model 865 that could result in oxidation of the DU shield. Without oxidation of the shield the shielding integrity of the cask is maintained and the container will meet the requirements of 10 CFR 71.73(c)(4).

A finite element analysis (FEA) was performed to evaluate the 865's performance under stress of the thermal test since the weldment was not breached during the other destructive pre-testing. A copy of this FEA is included in Section 2.12.3. Results of this analysis showed the ability of the 865 package to maintain its structural integrity relative to any thermal expansion that occurs during the thermal test. The 865 is determined to pass the requirements of the hypothetical accident thermal event.

2.7.4.4 Summary of Pressures and Temperatures

(Reference:

- *IAEA TS-R-1, paragraph 502(d))*

Table 2.7a: Summary Table of Temperatures

Surface Temperature Condition	Model 865 Package
During Fire Test (Maximum Temperature)	800°C (1,472°F)
Post-Fire (Maximum Temperature)	800°C (1,472°F)

The Model 865 container is vented to atmosphere. As such, no pressure will build up in the package under Hypothetical Accident conditions.

Table 2.7b: Summary Table of Maximum Pressures

Package Configuration	Void Volume (in^3)	Fire Conditions 800°C (1,472°F) Pressure Developed[1]
865	0	0 psig

[1]During the thermal test, the brass source tube, which is silver soldered in position, will melt at a temperature of 607°C (880°K), and the trapped gases will vent to atmosphere. As such, no pressure will build up in the package under Hypothetical Accident conditions.

2.7.4.5 Differential Thermal Expansion

A finite element analysis (FEA) was performed to evaluate the 865's performance under stress of the thermal test. A copy of this FEA is included in Section 2.12.3. Results of this analysis showed the ability of the 865 package to maintain its structural integrity during any expansion caused during the thermal test. As shown in the FEA, (Section 2.12.3), thermal expansion does not have a significant effect on the Model 865 package.

2.7.4.6 Stress Calculations

As was noted in Sections 2.7.4.5 and 2.12.3, thermal differentials will have no detrimental effect on the package.

2.7.4.7 Comparison of Allowable Stresses

The Model 865 package was tested and/or assessed as passing under Normal and Hypothetical Accident Conditions of transport. It is therefore concluded that the Model 865 package will satisfy the performance requirements specified by the regulations.

2.7.5 Immersion - Fissile Material

(Reference:

- *USNRC, 10 CFR 71.73 (c)(5)*
- *IAEA TS-R-1, paragraphs 731-733)*

Not applicable. This package is not used for transport of Type B quantities of fissile material.

2.7.6 Immersion - All Packages

(Reference:

- *USNRC, 10 CFR 71.73 (c)(6)*
- *IAEA TS-R-1, paragraph 701 and 729)*

The Model 865 transport package is open to the atmosphere and contains no other components that would create a differential pressure under immersion. All materials are impervious to water and would not be affected.

On 7 October 1983, a prototype Model 865 was subjected to a water immersion pressurization test. The Model 865 was fitted with an adapter attached to the source position indicator and two electrical switches used to indicate the source assembly position. The Model 865 was installed in a pressure chamber and the pneumatic fittings of the package were attached to the actuation air supply. The electrical switches were connected to the source assembly position indication system.

The pressure chamber was filled to within 100 mm (4 inches) of the top with sea water. A supply of argon was connected to the pressure chamber. The internal pressure in the chamber was monitored with a pressure gauge. The pressure in the chamber was increased to 2.49 Mpa (360 psi). At this pressure, the package was actuated for a total of 1,020 complete expose and

retract cycles. The package remained in this pressure environment (equivalent to 244 meters or 800 feet below sea level) for more than two hours.

At the conclusion of the test, the package operated satisfactorily. The package was disassembled and examined. There was no evidence of any water ingress during the test. A shielding efficiency test performed subsequent to the test demonstrated that this water immersion pressure condition did not reduce the shielding efficiency of the package.

The primary containment system in the model 865 package is a special form source, which meets the ISO 2919-1999 requirements for Class 3 pressure testing. Therefore the 865 could withstand the immersion test as Class 3 is in excess of the required 150 kPa (21.7 lb ft/in2).

2.7.7 Deep Water Immersion Test (for Type B Packages Containing More than 10^5 A_2)

(Reference:

- *USNRC, 10 CFR 71.61*
- *IAEA TS-R-1, paragraph 657, 658 and 730)*

Not applicable. This package does not transport normal form radioactive material in quantities exceeding 10^5A_2.

2.7.8 Summary of Damage

(Reference:

- *USNRC, 10 CFR 71.73(a) and (b)*
- *IAEA TS-R-1, paragraph 701, 702, 716 and 726)*

Table 2.7c summarizes the results of the Normal Conditions of Transport and Hypothetical Accident testing performed on the Model 865 transport package.

Table 2.7c: Summary of Damages During Test Plan 84

Test Specimen	Test	Actual Impact Point	Damage Observed at Test Site
TP84(A) sn 51 59.8 lb (27.1 kg)	Compression	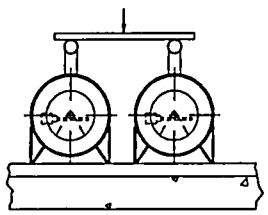	Units TP84(A) & TP84(B) tested together. Combined Load 649 lbs. No damage.
	Penetration Bar	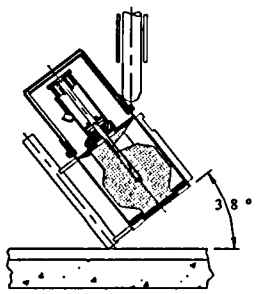	Penetration drop repeated twice since first attempt did not impact where intended. Impact Mark. No other visible damage.

Test Specimen	Test	Actual Impact Point	Damage Observed at Test Site
	4-foot free drop	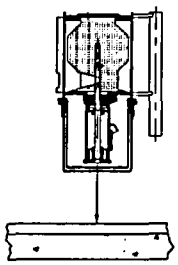	No significant damage.
	30-foot free drop	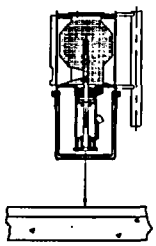	Drop repeated twice since the unit rotated while falling during the first attempt and did not impact where intended. Damage induced caused two of the cover bolts on the impact side to deform slightly and the protective cover to buckle slightly.
	Puncture drop	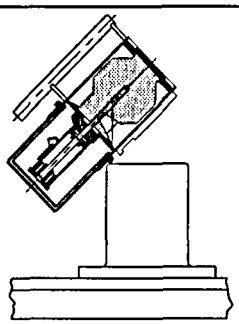	Witness mark on impact bolt. Secondary impact marks on the shell and leg of package. Some deformation of the leg occurred.
	Post Test Inspection	NA	• Protective Lid remained securely in place. • Actuator bolts bent slightly beneath lid but lock was undamaged, source secured. • Source rod fractured at the base of the thread joining the rod to the actuator assembly but the source remained secured with no significant change in source position. • No significant change in radiation profile.
TP80(B) 60.2 lb (27.3 kg)	Compression	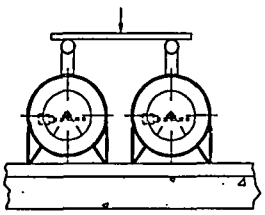	Units TP84(A) & TP84(B) tested together. Combined Load 649 lbs. No damage.

Test Specimen	Test	Actual Impact Point	Damage Observed at Test Site
	Penetration Bar	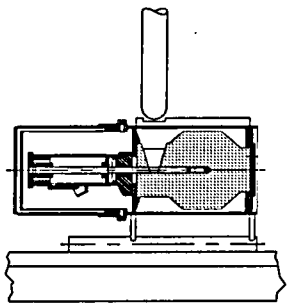	Impact Mark. No other visible damage.
	4-foot free drop	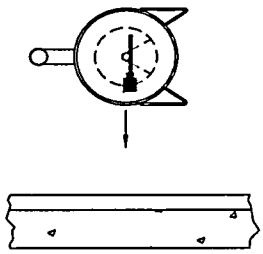	No significant damage.
	30-foot free drop	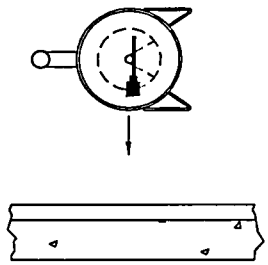	Slight flattening of the package along the line of impact.
	Puncture drop Orientation 1	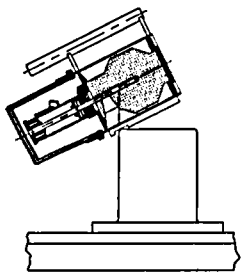	The package was dropped twice in this orientation since it rotated on the first attempt and did not impact where intended. Impact mark.
	Puncture drop Orientation 2	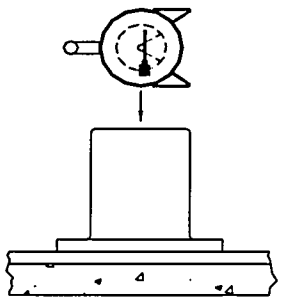	Impact mark.

Test Specimen	Test	Actual Impact Point	Damage Observed at Test Site
	Post Drop Test Inspection	NA	• Protective Lid remained securely in place. • Some of the fixing bolts and location holes in cover showed indications of strain. • Actuator and hold down bolts distorted • Witness mark on actuator base. • Lock assembly intact and undamaged, source secured. • No change in source position. • No significant change in radiation profile.

Based on the results and assessments for the test specimens addressed in Test Plan 84 Report (see Section 2.12.2), it is concluded that the Model 865 transport package maintains structural integrity and shielding effectiveness during Hypothetical Accident Conditions and Normal Conditions of Transport.

2.8 Accident Conditions for Air Transport of Plutonium

Not applicable. This package is not used for transport of plutonium.

2.9 Accident Conditions for Fissile Material Packages for Air Transport

Not Applicable. This package is not used for transport of Type B quantities of fissile material.

2.10 Special Form

(Reference:

- *USNRC, 10 CFR 71.75*
- *IAEA TS-R-1, paragraphs 602-604)*

The Model 865 transport package is designed for use with a special form source capsules which meets the ISO 2919-1999 requirements for Class 3 pressure testing. The source capsule must meet this criteria for transport in the Model 865.

2.11 Fuel Rods

Not applicable. This package is not used for transport of fuel rods.

2.12 Appendix

2.12.1 Test Plan 84 Rev 1 (March 1999).

2.12.2 Test Plan 84 Report Minus Appendix A (March 2000).

2.12.3 Model 865 Finite Element Analysis (June 2000).

Section 2.12.1 Appendix: Test Plan 84 Rev 1 (March 1999)

AEATECHNOLOGY
QSA

TEST PLAN NO. 84, Revision 1

TEST PLAN COVER SHEET

TEST TITLE: MODEL 865 UNDERWATER PROJECTOR	
PRODUCT MODEL: MODEL 865	
ORIGINATED BY: Gravatom (see attached cover sheet)	DATE:

TEST PLAN REVIEW

ENGINEERING APPROVAL: [illegible]	DATE: 12 MAR 99
QUALITY ASSURANCE APPROVAL: Daniel W. Kurtz	DATE: 12 Mar 99
REGULATORY APPROVAL: Cathleen Roughan	DATE: 12 Mar 99
COMMENTS:	

TEST RESULTS REVIEW

ENGINEERING APPROVAL:	DATE:
QUALITY ASSURANCE APPROVAL:	DATE:
REGULATORY APPROVAL:	DATE:

SENTINEL

TEST PLAN 84

MODEL 865

UNDERWATER PROJECTOR

March 1999

Issue 1

Prepared For

M. TREMBLAY
AEAT/QSA

Prepared By:		Date
G.V.HOLDEN GESL		12/3/99
Checked By:		**Date**
G.M.BATES GESL		12/3/99
Approved By:		**Date**
P.E.CULLUM GESL		12/3/99

FROM : GRAVATOM PHONE NO. : 01489894382 12 Mar. 1999 11:09AM P2

Contents

SECTION 1 INTRODUCTION 1

SECTION 2 TRANSPORT PACKAGE DESCRIPTION 2

SECTION 3 REGULATORY COMPLIANCE 5

SECTION 4 DISCUSSION ON SYSTEM FAILURE MODES OF INTEREST 7
4.1 General 7
4.2 Normal and Accident Conditions of Transport 7

SECTION 5 ASSESSMENT OF PACKAGE CONFORMANCE 8
5.1 Regulatory Requirements 8
5.1.1 Normal Conditions of Transport Tests (71.43(f)) 8
5.1.2 Hypothetical Accident Conditions (71.51(a)) 8
5.2 Test Package Contents 8

SECTION 6 CONSTRUCTION AND CONDITION OF TEST SPECIMENS 9

SECTION 7 MATERIAL AND EQUIPMENT LIST 10

SECTION 8 TEST PROCEDURE 11
8.1 General 11
8.2 Roles and Responsibilities 12
8.3 Test Specimen Preparation and Inspection 13
8.4 Summary of Test Schedule 14

8.5 COMPRESSION TEST (10 CFR 71.71(C)(9)) 16
8.5.1 Compression Test Set-up 16
8.5.2 Specimens TP84(A) and TP84(B) Orientation for Compression Test 17
8.5.3 Compression Test Assessment 18

8.6 PENETRATION TEST (10 CFR 71.71(C)(10)) 18
8.6.1 Penetration Test Set-up 18
8.6.2 Specimen TP84(A) Orientation for Penetration Test 19
8.6.3 Specimen TP84(B) Orientation for Penetration Test 20
8.6.4 Penetration Test Assessment 21

8.7 1.2M (4 FOOT) FREE DROP TEST (10 CFR 71.71(C)(7)) 22
8.7.1 1.2m (4 foot) Free Drop Test Set-up 22
8.7.2 Specimen TP84(A) Orientation for 1.2m (4 foot) Free Drop Test 23
8.7.3 Specimen TP84(B) Orientation for 1.2m (4 foot) Free Drop Test 24
8.7.4 1.2m (4 foot) Drop Test Assessment 25

8.8 INTERMEDIATE TEST INSPECTION 25

8.9 9M (30 FOOT) FREE DROP TEST (10 CFR 71.73(C)(1)) 26
8.9.1 9m (30 foot) Free Drop Test Set-up 26
8.9.2 Specimen TP84(A) Orientation for the 9m (30 foot) Drop Test 27
8.9.3 Specimen TP84(B) Orientation for the 9m (30 foot) Drop Test 28
8.9.4 9m (30 foot) Free Drop Test Assessment 29

8.10 PUNCTURE TEST (10 CFR 71.73(C)(3)) 30
8.10.1 Puncture Test Set-up 30
8.10.2 Specimen TP84(A) Orientation for Puncture Test 1 31
8.10.3 Specimen TP84(B) Orientation for Puncture Test 2 32
8.10.4 Specimen TP84(B) Orientation for Puncture Test 3 33
8.10.5 Puncture Test Assessment 33

8.11 FINAL TEST INSPECTION 34

SECTION 9 WORKSHEETS 35

APPENDIX A ..... Drawing R86590 Rev.A

List of Figures

Fig. 2.1 Schematic of the Model 865 Underwater Projector

Fig. 8.5.2.1 Specimens TP84(A) and TP84(B) Orientation for the Compression Test

Fig. 8.6.2.1 Specimen TP84(A) Orientation for the Penetration Test

Fig. 8.6.3.2 Specimen TP84(B) Orientation for the Penetration Test

Fig. 8.7.2.1 Specimen TP84(A) Orientation for the 1.2m (4 foot) Drop Test

Fig. 8.7.3.1 Specimen TP84(B) Orientation for the 1.2m (4 foot) Free Drop Test

Fig. 8.9.2.1 Specimen TP84(A) Orientation for the 9m (30 foot) Drop Test

Fig. 8.9.3.1 Specimen TP84(B) Orientation for the 9m (30 foot) Drop Test

Fig. 8.10.2.1 Specimen TP84(A) Orientation for Puncture Test 1

Fig. 8.10.3.1 Specimen TP84(B) Orientation for Puncture Test 2

Fig. 8.10.4.1 Specimen TP84(B) Orientation for Puncture Test 3

AEAT/QSA Test Plan No. 84

Section 1 Introduction

This document describes the mechanical test plan for the Model 865 Projector to meet NRC requirements for Type B(U) packages as described in the Code of Federal Regulations, 10 CFR Part 71, revised as of January 1, 1997. The test plan also covers the criteria stated in the IAEA Regulations for the Safe Transport of Radioactive Material, Safety Series No.6 1985 Edition, (As Amended 1990).

The Model 865 is currently approved for use under Certificate of Compliance 9187.

This document describes the test package specification, testing equipment, testing scenario, justifies the package orientations for the different test specimens and provides test worksheets to record key steps in the testing sequence.

Section 2 Transport Package Description

The Model 865 Underwater Projector (Figure 2.1) consists of the following major components:

- Nickel plated tungsten source rod and capsule holder enclosed in a depleted-uranium shield
- 1/8" thick stainless steel projector weldment
- Actuator cylinder
- 1/8" thick stainless steel shipping cover
- 2 stainless steel housing supports
- 1/16" thick stainless steel actuator guard
- Stainless steel handle
- Stainless steel lock assembly

The shield assembly consists of a 3/8" nominal outside diameter brass source tube around which is cast the depleted uranium shield. The source tube is closed at one end by a silver soldered brass end cap and sealed against water ingress at the actuator by means of a buna-N rubber O-ring rated for operation at temperatures between -40°F and +125°F. Two machined brass support rings are pressed onto the depleted uranium shield. The brass rings locate into a rabbeted stainless steel plate at each end of the shield. The plates are welded to the ends of a stainless steel cylinder and the whole forms the projector weldment.

The source is manoeuvred by the pneumatically controlled actuator assembly which is fixed to the projector weldment with four 5/16"-18×5" long hex head stainless steel bolts. The source is made fail safe by means of a return spring should the pneumatic control system fail.

The source rod is inserted into the source tube. Radial clearance between the source tube and rod allows a slip fit to facilitate assembly and free movement of the source rod in operation. A locking pin secures the source rod and source within the shielding when not in use. The lock is key operated and the locking pin is manually activated. The source is contained in a Special Form capsule.

The lock and actuator assemblies are protected by a 1/8" thick stainless steel shipping cover which is fixed to the projector weldment and actuator guard weldment with four M6x12mm long hexagon head stainless steel bolts.

The depleted-uranium shield provides the primary radiation protection for the Model 865 underwater projector. The shield accomplishes this by limiting the transmission of gamma

radiationi to a dose rate of 200 mR/hr (2 mSv/hr) at the package surface and limiting the dose rate to 10 mR/hr (0. MSv/hr) at one meter from the surface of the package.

The gross weight of the Model 865 is approximately 59 lbs.

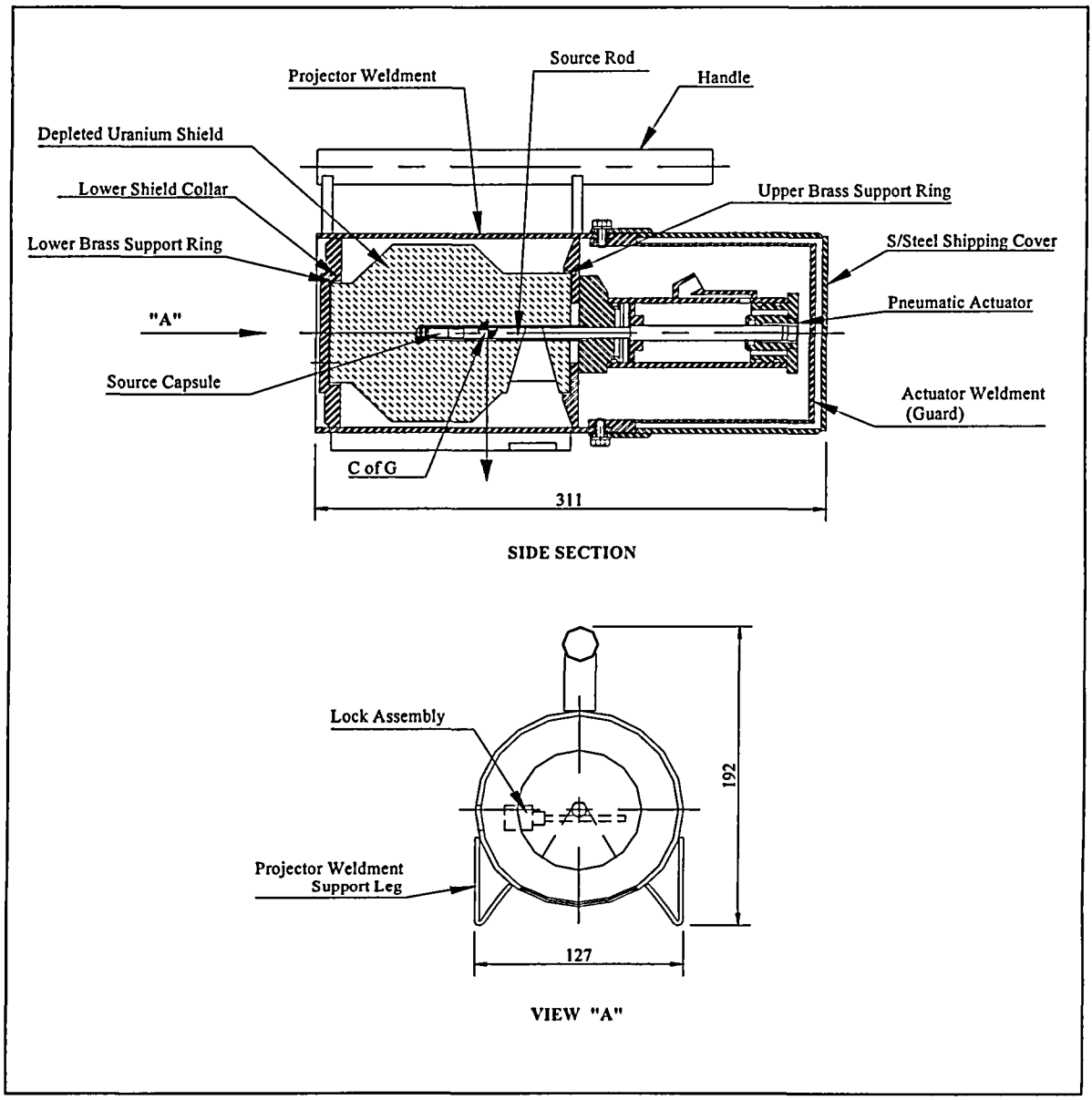

FIGURE 2.1: MODEL 865 UNDERWATER PROJECTOR

Section 3 Regulatory Compliance

The purpose of this plan, which was developed in accordance with AEAT/QSA SOP-E005, is to ensure that the Model 865 underwater projector complies with the Type B(U) transport package test requirements of 10 CFR 71 and the IAEA Safety Series No.6.

The tests for Normal Conditions of Transport (10 CFR 71.71) to be performed are the compression test, penetration test and 1.2m (4 foot) (four foot) free drop test.

The water spray preconditioning of the package is not performed as the Model 865 underwater projector is constructed of waterproof materials throughout. The water spray would not contribute to any degradation in structural integrity.

The Hypothetical Accident Tests (10 CFR 71.73) to be performed are the 9m (30 foot) free drop test and the puncture test.

The crush test (10 CFR 71.73(c)(2)) will not be performed because the radioactive contents are qualified as Special-Form radioactive material.

The thermal test of 10 CFR 71.73(c)(4) has been excluded from the series of tests following an appraisal of the package design and materials used in its production. The main components of the package and their respective melting points are listed below:

Material.	Melting Point.	
Stainless steel	1390°C	2534°F
Depleted uranium	1135°C	2075°F
Copper	1083°C	1981°F

No components apart from the O-ring seals will degrade at temperatures of 800°C, the thermal test temperature.

The depleted uranium shield is surrounded by a small closed volume of air. Testing of the package under normal and hypothetical accident conditions of transport are not expected to cause a breach of this sealed containment. Subject to damage assessment post hypothetical accident conditions there will be no mechanism for a free supply of oxygen to reach the shield and thereby cause it to burn. During a fire test limited oxidation only will occur due to the small volume of oxygen present following assembly of the package and melting of the rubber O-rings and silver solder which seals the brass end cap onto the source tube.

The shield is completely encased and secured within a stainless steel weldment. Severe disruption of the weldment must occur for the shield to be displaced with relation to the source. In addition, the source capsule is held within the shield by a rod which is secured mechanically by a plunger lock and a spring located within the actuator. Both mechanisms must be removed to allow the rod to become free and the source to move out of the shield. As neither of these events are likely, as shown through experimental testing and analysis, the shield will not move relative to the source during thermal testing.

In the event that either of these catastrophic events occur during testing, the requirement for a thermal test will be re-assessed.

Section 4 Discussion on System Failure Modes of Interest

4.1 General

The tests in this plan focus on damaging those components of the package which could cause displacement of the source from its stored position within the depleted uranium shield and which affect the integrity of the shield itself.

4.2 Normal and Accident Conditions of Transport

The modes of failure under normal and accident conditions which could lead to elevated dose rates include the following:

4.2.1 Fracture or penetration of the projector weldment.

4.2.2 Displacement of the shield within the projector weldment and distortion or fracture of the source.

4.2.3 Removal or partial removal of the shipping cover and simultaneous failure of the locking pin and actuator assembly.

The test conditions specified in this Test Plan are intended to challenge the ability of the Model 865 package with respect to these failure modes.

The orientations shown in Figures 8.7.2.1 and 8.9.2.1 are intended to challenge the shipping cover, actuator cover and cover bolts. If the covers can be removed in the drop test damage may be caused to the actuator assembly and locking pin either directly or in the subsequent puncture test (failure mode 4.2.2 & 4.2.3).

The orientations shown in Figures 8.7.3.1 and 8.9.3.1 are intended to challenge the locking mechanism and projector weldment (failure mode 4.2.1 & 4.2.3). Additionally, testing in these orientations will challenge the fixture and position of the shield and source (failure mode 4.2.2).

Section 5 Assessment of Package Conformance

5.1 Regulatory Requirements

5.1.1 Normal Conditions of Transport Tests (71.43(f))

There should be no loss or dispersal of radioactive contents, no significant increase in external surface radiation levels and no substantial reduction in the effectiveness of the packaging.

5.1.2 Hypothetical Accident Conditions (71.51(a))

There should be no escape of radioactive materials greater than A_2 in one week and no external dose rate greater than 1 Rem/hr (10 mSv/hr) at 1m from the external surface with the maximum radioactive contents which the package is designed to carry.

5.2 Test Package Contents

The Model 865 underwater projector is designed to carry a Special Form Source. Containment of the radioactive source is tested at manufacture. The source capsule design has been certified by the US DOT in accordance with the performance requirements for Special Form as specified in 49 CFR.

This test plan therefore does not discuss/specify tests of the containment of the radioactive source. The purpose of the tests is to demonstrate that the shielding remains effective within the limits specified by the regulations.

A simulated source will be used during testing of the package. The radiation levels post test will be monitored by replacing the simulated source with an active source.

Section 6 Construction and Condition of Test Specimens

Two test specimens built to drawing 86590 Rev.A and the AEAT/QSA Quality Assurance Program are to be tested. They are to be designated TP84(A) and TP84(B). The weight of the test units will be a minimum of 59 lbs.

The Model 865 is constructed principally from Type 304 stainless steel, which is not susceptible to embrittlement at low temperatures. Additionally, the effect of the difference between 38°C (100.4°F) and ambient, nominally 20°C (68°F), on the mechanical properties is insignificant. Therefore, the testing will be performed under ambient temperature conditions.

Section 7 Material and Equipment List

The test worksheets in Section 9 list the equipment to the specifications required by 10 CFR 71 and all other necessary equipment and measuring instruments needed to perform the tests. Additional materials and equipment may be used to facilitate the tests.

Section 8 Test Procedure

8.1 General

Two units are to be tested in the sequence presented below. Each test has been designed to check the integrity of various components of the package. An assessment of transport integrity of the package can be made, based on the cumulative effect of the tests performed on the package.

Since these units may experience rough handling prior to transportation and during normal use, the specimens will be subjected to normal conditions of transport tests in sequence with the hypothetical accident tests.

The tests have the following sequences:

Test sequence 1. (Specimen TP84(A))

Normal Conditions of Transport Tests.

1. Test specimen preparation and inspection
2. Compression test (10 CFR 71.71(c)(9))
3. Penetration test (10 CFR 71.71(c)(10)
4. 1.2m (4 foot) free drop test (10 CFR 71.71(c)(7))
5. First, intermediate test inspection

Hypothetical Accident Conditions Tests.

5. 9m (30 foot) free drop test (10 CFR 71.73(c)(1))
6. Puncture test (10 CFR 71.73(c)(3))
7. Final test inspection and evaluation for thermal test.

Test sequence 2. (Specimen TP84(B))

Normal Conditions Tests.

1. Test specimen preparation and inspection
2. Compression test (10 CFR 71.71(c)(9))
3. Penetration test (10 CFR 71.71(c)(10))
4. 1.2m (4 foot) free drop test (10 CFR 71.71(c)(7))
5. First, intermediate test inspection

Hypothetical Accident Conditions Tests.

6. 9m (30 foot) free drop test (10 CFR 71.73(c)(1))
7. Puncture test (10 CFR 71.73(c)(3))
8. Final test inspection and evaluation for thermal test.

8.2 Roles and Responsibilities

The responsibilities of the groups identified in this plan are:

- **Engineering** executes the tests according to the test plan and summarises the test results. Engineering also provides technical input to assist Regulatory Affairs and Quality Assurance as needed.
- **Regulatory Affairs** monitors the tests and reviews test reports for compliance with regulatory requirements.
- **Quality Assurance** oversees test execution and test report generation to assure compliance with the AEAT Quality Assurance Programme.
- **Engineering, Regulatory Affairs** and **Quality Assurance** are jointly responsible for assessing test and specimen conditions relative to 10 CFR 71.
- **Quality Control** is responsible for measuring and recording test and specimen data throughout the test cycle.

8.3 Test Specimen Preparation and Inspection

Use *Checklist 1: Specimen Preparation and Inspection.*

To prepare the test units:

1. Manufacture two standard Model 865 underwater projectors. Clearly and indelibly mark the packages Test Specimen TP84(A) and TP84(B).

2. Measure and record the weight of each package.

3. Inspect the test units and documentation to ensure that:

   - All fabrication and inspection records are documented in accordance with the AEAT Quality Assurance Programme.

   - The test units comply with the requirements of Drawing R86590, Rev.A.

4. Perform and record the radiation profile in accordance with AEAT/QSA Work Instruction WI-Q09.

5. **Engineering, Regulatory Affairs** and **Quality Assurance** will jointly verify that the test specimens comply with Drawing R86590 Rev. A, and the AEAT/QSA Quality Assurance Programme.

6. Prepare the packages for transport in accordance with the operating manual.

8.4 Summary of Test Schedule

Normal Conditions	Para.	Specimen	Diagram
Compression.	71.71(c)(9)	TP84(A) & TP84(B)	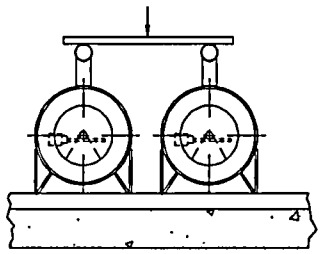
Penetration 1. Target one cover bolt.	71.71(c)(10)	TP84(A)	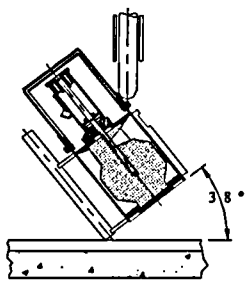
Penetration 2. Target the center of the beam port.	71.71(c)(10)	TP84(B)	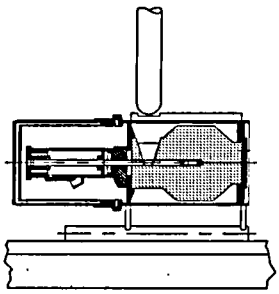
1.2m (4 foot) Drop 1. Target the end of the shipping cover.	71.71(c)(7)	TP84(A)	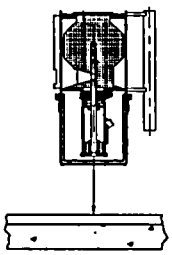
1.2m (4 foot) Drop 2. Target the lock.	71.71(c)(7)	TP84(B)	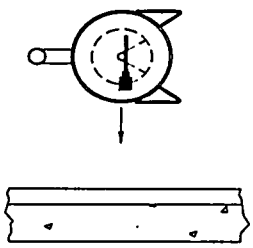

Accident Conditions	Para.	Specimen	Diagram
9m (30 foot) Drop 1. Target the end of the shipping cover.	71.73(c)(1)	TP84(A)	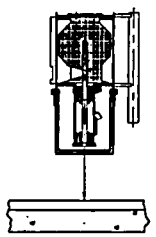
9m (30 foot) Drop 2. Target the lock.	71.73(c)(1)	TP84(B)	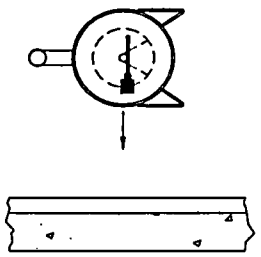
Puncture 1. Target one cover bolt.	71.73(c)(3)	TP84(A)	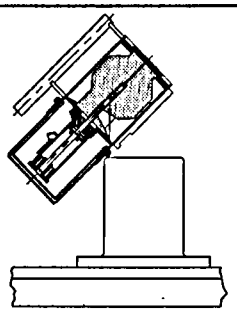
Puncture 2. Target the beam port.	71.73(c)(3)	TP84(B)	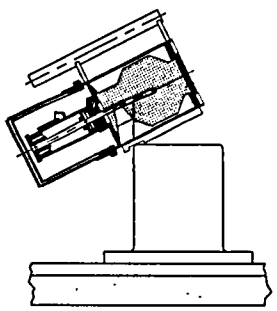
Puncture 3 Target the lock.	71.73(c)(3)	TP84(B)	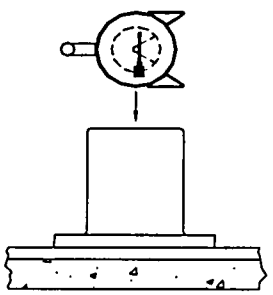

8.5 Compression Test (10 CFR 71.71(c)(9))

The first test carried out on both specimens is the compression test of 10 CFR 71.71(c)(9). This requires a package to be subjected for a period of 24 hours to a compressive load applied uniformly to the top and bottom of the package in the position in which the package would normally be transported. The compressive load must be the greater of the following:

I. The equivalent of 5 times the weight of the package = 5×59 lbs = 295 lbs or
II. The equivalent of 13kPa (2 lbf/in^2) multiplied by the vertically projected area of the package = (5″×12.25″)×2 = 122.5 lbs.

Use *Checklist 2: Compression Test* to ensure that the test sequence is followed. Date and initial all action items and record required data.

NOTE: *The worksheets identify steps which must be witnessed by Engineering, Regulatory Affairs and Quality Assurance.*

8.5.1 Compression Test Set-up

This test requires that the compressive load is applied to the package in the position in which the package would normally be transported.

To facilitate application of a compressive load, the two specimens are to be placed side by side with a suitable platform placed on top of their handles. As the compressive load will be shared between the two specimens it needs to be increased by a factor of two. This will ensure that each specimen is subjected to the load required in 10 CFR 71.71(c)(9).

NOTE: *Because each test is designed to add to damage inflicted on a specific component or assembly in the proceeding test, it is important that each specimen maintain its identity throughout the battery of tests and that the set-up instructions specific to the specimen are strictly followed.*

To prepare a specimen for the compression test:

1. Position specimens according to the orientation described below.

2. Record the overall dimensions of the packages pre-test.

3. Position the load platform onto the specimens and apply the test load of the equivalent of at least five times the mass of both protectors combined (greater than 590 lbs).

4. Record applied load and photograph the test set-up.

5. Record the overall dimensions of the packages post test.

6. After 24 hours remove the load. Record the damage and take a photographic record.

8.5.2 Specimens TP84(A) and TP84(B) Orientation for Compression Test

No specific orientation of the package for transportation is recommended therefore, after examination of the package shape and method of carrying, the following orientation is considered representative of a probable transportation position.

Specimens TP84(A) and TP84(B) are placed side by side on their housing supports so that their handles are at the top. A support platform is placed across the handles, the load being applied on top of this frame (figure 8.5.2.1).

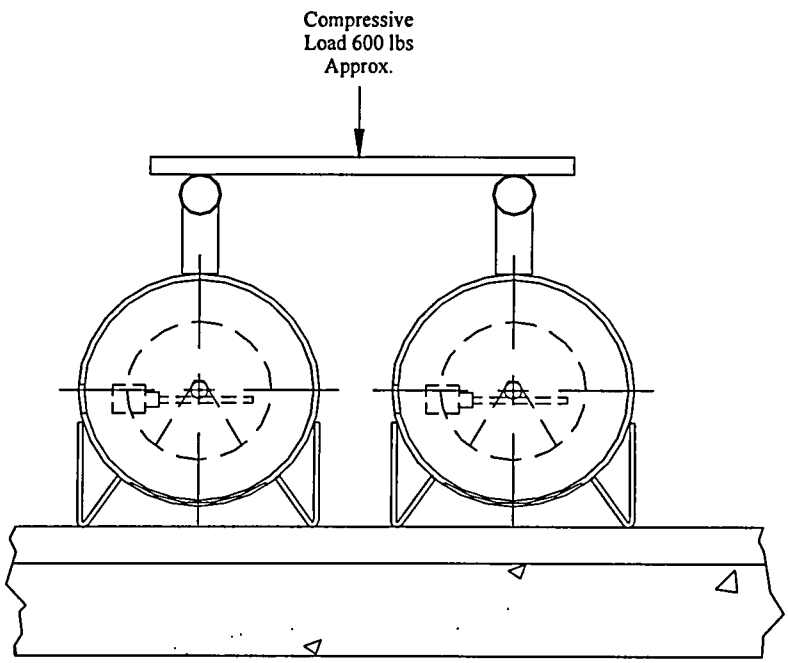

Figure 8.5.2.1: Specimens TP84(A) and TP84(B) Orientation for the Compression Test

8.5.3 Compression Test Assessment

Upon completion of the test, **Engineering, Regulatory Affairs** and **Quality Assurance** team members will jointly take the following actions:

- Review the test execution to ensure that the test was performed in accordance with 10 CFR 71.71.
- Make a preliminary evaluation of each specimen relative to the requirements of 10 CFR 71.
- Assess the damage to each specimen to decide whether testing is to continue.

8.6 Penetration Test (10 CFR 71.71(c)(10))

The second test carried out on specimen TP84(B) is the penetration test as described in 10 CFR 71.71(c)(10), in which a penetration bar is dropped from a height of 1m (40") to impact a specified point on the package. The bar is dropped through a guide tube.

Use *Checklist 3: Penetration Test* to ensure that the test sequence is followed. Date and initial all action items and record required data.

NOTE: *The worksheets identify steps which must be witnessed by Engineering, Regulatory Affairs and Quality Assurance.*

8.6.1 Penetration Test Set-up

There is a specific orientation for the specimen so that the penetration bar is aimed at the component or assembly of interest.

NOTE: *Because each test is designed to add to damage inflicted on a specific component or assembly in the proceeding test, it is important that each specimen maintain its identity throughout the battery of tests and that the set-up instructions specific to the specimen are strictly followed.*

To prepare a specimen for the penetration test:

1. Place the specimen on the drop surface and position it according to the specimen-specific orientation described below.

2. Position the guide tube directly above the specified point of impact, and raise the penetration bar 1m (40") above the target. Photograph the test set-up.

3. Measure and record the ambient temperature.

4. Start the video recorder.

5. Drop the test bar. Record damage and take a photographic record.

8.6.2 Specimen TP84(A) Orientation for Penetration Test

The penetration target for Specimen TP84(A) is a shipping cover bolt. If the bolt is weakened or broken by the impact of the penetration bar the cover may become easier to displace in the following tests.

Specimen TP84(A) is rigidly supported so that the penetration bar can be arranged to impact a bolt in such a way as to induce maximum shear stress in the bolt (figure 8.6.2.1).

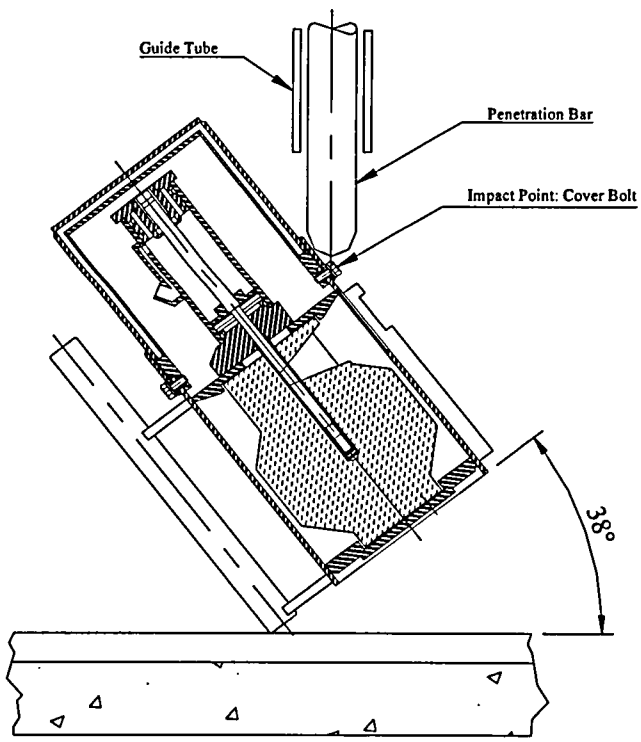

Figure 8.6.2.1:Specimen TP84(A) Orientation for the Penetration Test

8.6.3 Specimen TP84(B) Orientation for Penetration Test

The penetration target for Specimen TP84(B) is the beam port in the projector weldment. Penetration of the projector weldment might increase the external dose rate above regulatory limits.

Specimen TP84(B) is placed on its handle and supported in this position so that the beam port faces upwards as shown. The guide tube and penetration bar are arranged such that the impact point is above the beam port (figure 8.6.3.2).

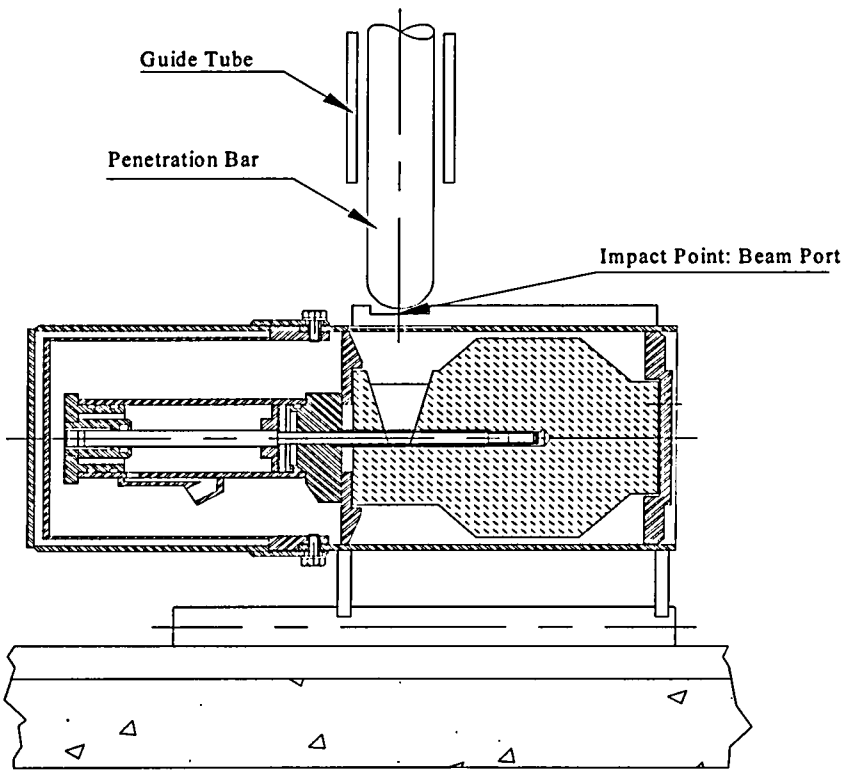

Figure 8.6.3.2:Specimen TP84(B) Orientation for the Penetration Test

8.6.4 Penetration Test Assessment

Upon completion of the test, **Engineering, Regulatory Affairs** and **Quality Assurance** team members will jointly take the following actions:

- Review the test execution to ensure that the test was performed in accordance with 10 CFR 71.71.
- Make a preliminary evaluation of the specimen relative to the requirements of 10 CFR 71.
- Assess the damage to the specimen to decide whether testing of that specimen is to continue.
- Evaluate the condition of the specimen to determine what changes, if any, are necessary in package orientation for the 1.2m (4 foot) drop to achieve maximum damage.

8.7 1.2m (4 foot) Free Drop Test (10 CFR 71.71(c)(7))

The next Normal Transport Conditions test is the 1.2m (4 foot) (four-foot) drop test as described in 10 CFR 71.71(c)(7). This drop compounds any damage caused by the compression test and the penetration test.

Use *Checklist 4: 1.2m (4 foot) Drop Test* to ensure that the test sequence is followed. Date and initial all action items and record required data on the worksheet.

NOTE: *The worksheet identifies those steps which must be witnessed by Engineering, Regulatory Affairs and Quality Assurance.*

8.7.1 1.2m (4 foot) Free Drop Test Set-up

In this test, the package is released from a height of 1.2m (4 foot) and lands on the steel drop surface. There is a specific orientation for the specimen so that the package lands on the component or assembly of interest.

NOTE: *Because each test is designed to add to damage inflicted on a specific component or assembly in the preceding test, it is important that each specimen maintains its identity throughout the battery of tests and that the set-up instructions specific to the specimen are strictly followed.*

To set up a package for the 1.2m (4 foot) drop test:

1. Place the specimen on the drop surface and position it according to the specimen-specific orientation described below. Ensure the center of gravity of the package is directly over the impact point.

2. The lifting mechanism/system shall be arranged such that the center of gravity marker for each package is as shown in either Figure 8.7.2.1 or Figure 8.7.3.1 (unless orientation is changed by assessment).

3. Measure and record the ambient temperature.

4. Raise the package so that the impact target is 1.2m (4 foot) above the drop surface.

5. Photograph the set-up.

6. Start the video recorder.

7. Drop the package. Record the damage to the package and take a photographic record.

8.7.2 Specimen TP84(A) Orientation for 1.2m (4 foot) Free Drop Test

The 1.2m (4 foot) drop test set-up for Specimen TP84(A) is shown in Figure 8.7.2.1. The object of the drop is to cause deformation or removal of the shipping cover and actuator guard and apply a shear load to the fixing bolts.

The specimen will be dropped in an axial direction onto its top end. It is important to position test specimen TP84(A) so that its center of gravity is directly above the impact point.

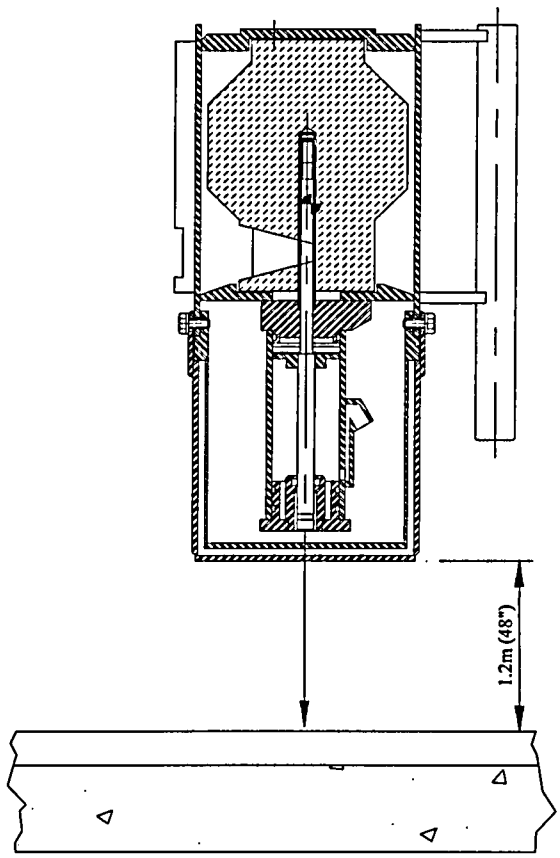

Figure 8.7.2.1:Specimen TP84(A) Orientation for the 1.2m (4 foot) Drop Test

8.7.3 Specimen TP84(B) Orientation for 1.2m (4 foot) Free Drop Test

The projector will strike the drop surface on its left (lock) side. The object of the test is to cause damage to the locking mechanism and projector weldment which in conjunction with previous tests or following tests may cause the source to be moved from the shielded position.

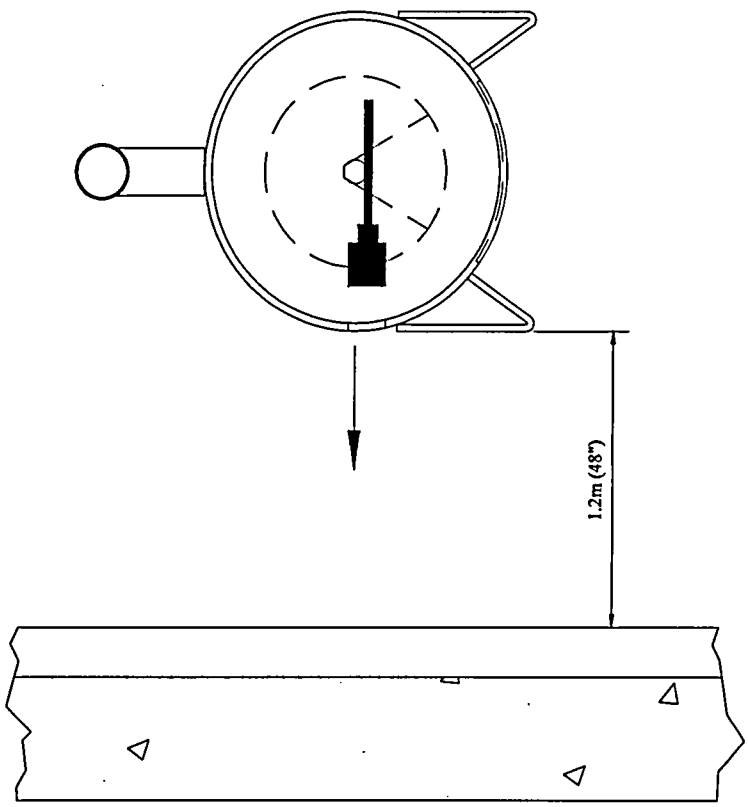

Figure 8.7.3.1:Specimen TP84(B) Orientation for the 1.2m (4 foot) Free Drop Test

8.7.4 1.2m (4 foot) Drop Test Assessment

Upon completion of the test, **Engineering, Regulatory Affairs** and **Quality Assurance** team members will jointly take the following actions:

- Review the test execution to ensure that the test was performed in accordance with 10 CFR 71.71.
- Assess the damage to the specimen.
- Evaluate the condition of the specimens to determine whether the testing is to proceed further.

8.8 Intermediate Test Inspection

An intermediate test inspection after the 1.2m (4 foot) drop tests will be performed on each specimen.

1. Measure and record any damage to each test specimen.

Engineering, Regulatory Affairs and **Quality Assurance** team members will make a final assessment of the test specimen and jointly determine whether the specimen meets the requirements of 10 CFR 71.71 set out in section 5, para. 5.1.1.

8.9 9m (30 foot) Free Drop Test (10 CFR 71.73(c)(1))

The first Hypothetical Accident Test is the 9m (30 foot) free drop test as described in 10 CFR 71.73(c)(1).

Use *Checklist 5: 9m (30 foot) Drop Test* to ensure that the test sequence is followed. Date and initial all action items, and record required data on the worksheet.

NOTE: *The worksheet identifies those steps which must be witnessed by Engineering, Regulatory Affairs and Quality Assurance.*

Figure 8.9.2.1 and Figure 8.9.3.1 illustrate the anticipated orientations for the two test units.

8.9.1 9m (30 foot) Free Drop Test Set-up

In this test, the package is released from a height of 9m (30 foot) and lands on the steel drop surface. There is a specific orientation for the specimen so that the package lands on the component or assembly of interest.

NOTE: *Because each test is designed to add to damage inflicted on a specific component or assembly in the preceding test, it is important that each specimen maintains its identity throughout the battery of tests and that the set-up instructions specific to the specimen are strictly followed.*

To set up a package for the 9m (30 foot) drop test:

1. Place each specimen on the drop surface and position it according to the specimen-specific orientation described below.
2. The lifting mechanism/system shall be arranged such that the center of gravity is as shown in Figure 8.9.2.1 or Figure 8.9.3.1. Ensure the center of gravity of the package is directly over the impact point.
3. Raise the package so that the impact target is 9m (30 foot) above the drop surface.
4. Measure and record the ambient temperature.
5. Photograph the set-up.

6. Start the video recorder.

7. Drop the package.

8. Record the damage to the package and take a photographic record.

8.9.2 Specimen TP84(A) Orientation for the 9m (30 foot) Drop Test

Figure 8.9.2.1 shows the package orientation for Specimen TP84(A). The object of the drop is to cause deformation or removal of the shipping cover and actuator guard and apply a shear load to the fixing bolts.

The specimen will be dropped in an axial direction onto its top end. It is important to position test specimen TP84(A) so that its center of gravity is directly above the impact point.

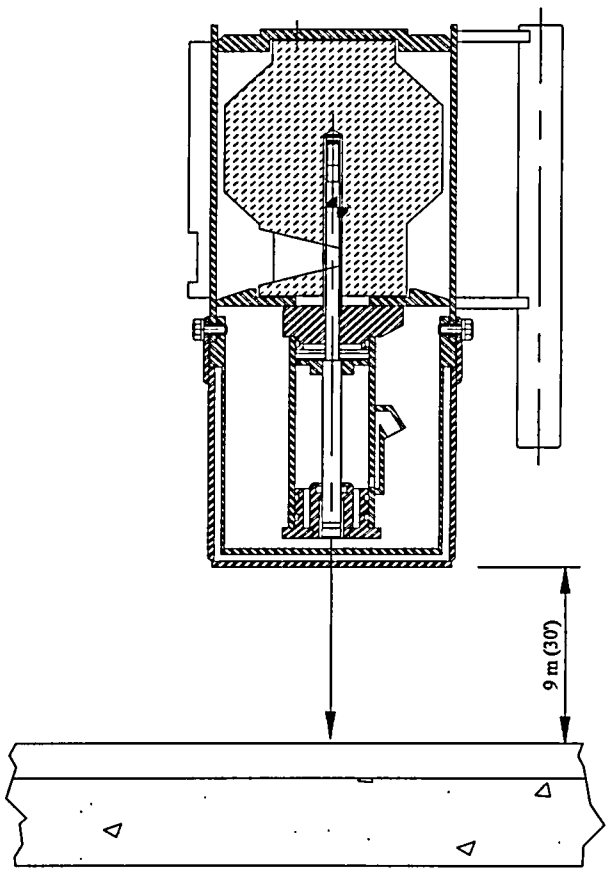

Figure 8.9.2.1:Specimen TP84(A) Orientation for the 9m (30 foot) Drop Test

8.9.3 Specimen TP84(B) Orientation for the 9m (30 foot) Drop Test

Figure 8.9.3.1 shows the package orientation for Specimen TP84(B). The projector will strike the drop surface on its left (lock) side. The object of the test is to cause damage to the locking mechanism which in conjunction with previous tests or following tests may cause the source to be moved from the shielded position.

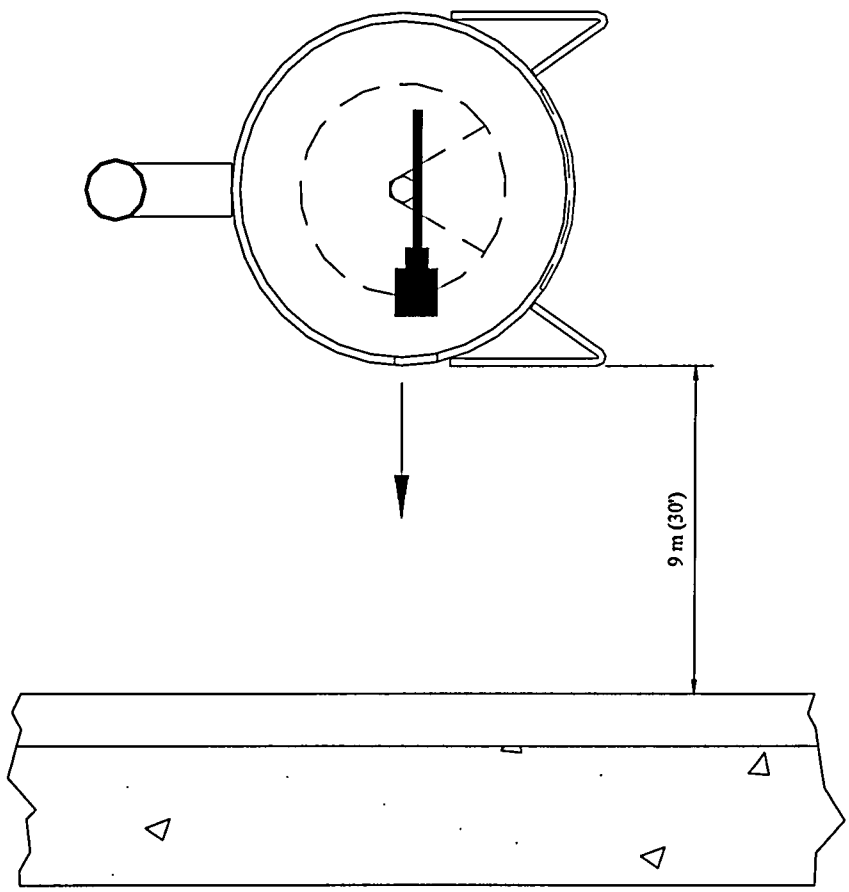

Figure 8.9.3.1: Specimen TP84(B) Orientation for the 9m (30 foot) Drop Test

8.9.4 9m (30 foot) Free Drop Test Assessment

Upon completion of each test, **Engineering, Regulatory Affairs** and **Quality Assurance** team members will jointly take the following actions:

- Review the test execution to ensure that each test was performed in accordance with 10 CFR 71.
- Make a preliminary evaluation of the specimens relative to the requirements of 10 CFR 71.
- Assess the damage to each specimen to decide whether testing of that specimen is to continue.
- Evaluate the condition of each specimen to determine what changes, if any, are necessary in package orientation in the puncture test to achieve maximum damage.

8.10 Puncture Test (10 CFR 71.73(c)(3))

The 9m (30 foot) free drop test is followed by the puncture test of 10 CFR 71.73(c)(3), in which a package is dropped from a height of 1m (40") onto the puncture billet.

The billet is to be bolted to the drop surface used in the drop tests.

Use *Checklist 6: Puncture Test* to ensure that the test sequence is followed. Date and initial all action items and record required data on the worksheet.

NOTE: *The worksheet identifies those steps which must be witnessed by Engineering, Regulatory Affairs and Quality Assurance.*

8.10.1 Puncture Test Set-up

A specific orientation has been identified for each specimen so that the package lands on the component or assembly of interest. However, the final orientations may be determined based on the assessment of the damage caused by the 9 m (30 foot) drops.

NOTE: *Because each test is designed to add to damage inflicted on a specific component or assembly in the preceding test, it is important that each specimen maintain its identity throughout the battery of tests and that the set-up instructions specific to the specimen are strictly followed.*

This test uses the 12" high puncture billet. The billet meets the minimum height (8") required in 10 CFR 71.73(c)(3). The specimen has no projections or overhanging members longer than 12" which could act as impact absorbers, thus allowing the billet to cause the maximum damage to the specimen.

To set up a package for the puncture test:

1. Measure and record the ambient temperature.

2. Position it according to the specimen-specific orientation shown in figures 8.10.2.1, 8.10.3.1. and 8.10.3.2, or as determined following previous testing.

3. Check the alignment of the center of gravity with the targeted point of impact.

4. Raise the package so that there is 1m (40") between the impact point on the package and the top of the puncture billet.

5. Photograph the set-up.

6. Start the video recorder.

7. Drop the package.

8. Record the damage to the package and take a photographic record.

Figures 8.10.2.1, 8.10.3.1 and 8.10.3.2 illustrate the puncture test package orientations for Specimens TP84(A) and TP84(B), respectively.

8.10.2 Specimen TP84(A) Orientation for Puncture Test 1

The objective of this drop orientation (Figure 8.10.2.1) is to continue the damage inflicted on the specimen by the 9m (30 foot) drop test and to continue to challenge the cover bolts.

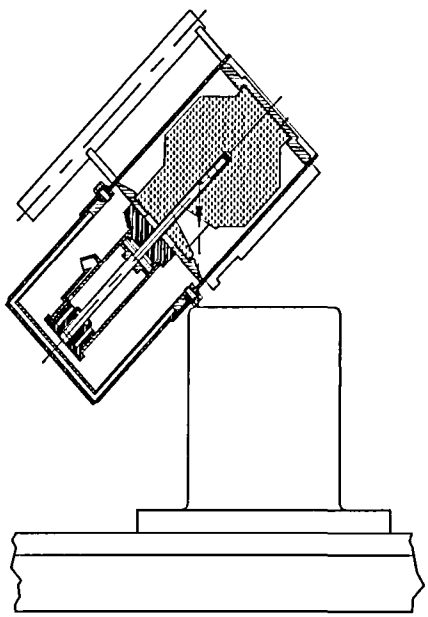

Figure 8.10.2.1:Specimen TP84(A) Orientation for Puncture Test 1

8.10.3 Specimen TP84(B) Orientation for Puncture Test 2

The objective of this drop orientation (Figure 8.10.3.1) is to fracture, penetrate or distort the projector weldment in the vicinity of the beam port. The target is the center of the beam port.

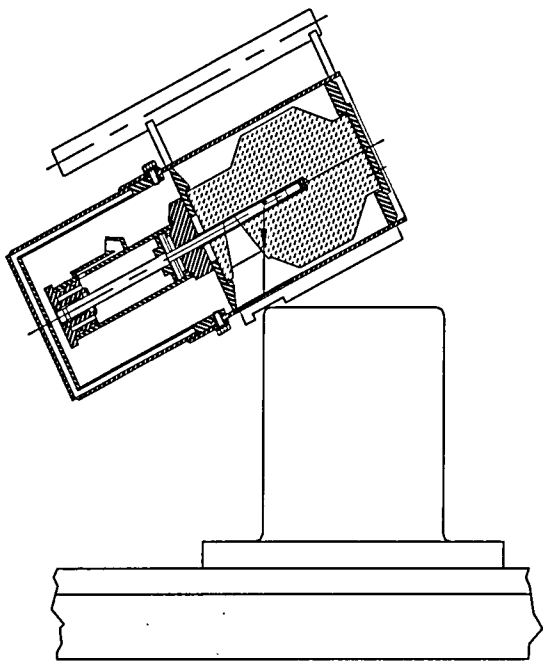

Figure 8.10.3.1:Specimen TP84(B) Orientation for Puncture Test 2

8.10.4 Specimen TP84(B) Orientation for Puncture Test 3

The objective of this drop orientation (Figure 8.10.4.1) is to target the lock assembly adding to the damage caused in the 9 m (30 foot) drop.

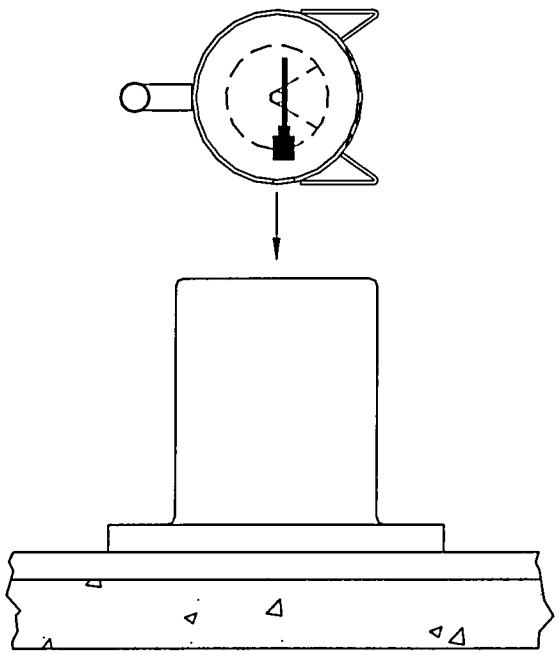

Figure 8.10.4.1:Specimen TP84(B) Orientation for Puncture Test 3

8.10.5 Puncture Test Assessment

Upon completion of the test, **Engineering, Regulatory Affairs** and **Quality Assurance** team members will jointly take the following actions:

- Review the test execution to ensure that the tests was performed in accordance with 10 CFR 71.73
- Make a preliminary evaluation of each specimen relative to the requirements of 10 CFR 71.
- Assess whether the thermal test needs to be performed.

8.11 Final Test Inspection

Perform the final test inspection after the puncture tests

1. Measure and record the damage to each of the test specimens.

2. Remove and assess the condition of the simulated source.

3. Reassemble the packages using a representative active source, making sure that the source wire position and the package configuration are the same as they were immediately after puncture testing.

4. Measure and record a radiation profile of each test specimen in accordance with AEAT/QSA Work Instruction WI-Q09.

5. Assess the significance of any change in radiation at the surface or at one meter from the packages.

6. Determine whether it is necessary to dismantle either of the test specimens for inspection of hidden component damage or failure.

7. If the decision is taken to proceed with the inspection, record and photograph the process of removing any component.

8. Measure and record any damage or failure found in the process of dismantling the test specimens.

9. **Engineering, Regulatory Affairs,** and **Quality Assurance** team members will make a final assessment of each test specimen and jointly determine whether the specimen meets the requirements of 10 CFR 71.

Section 9 Worksheets

Use the following worksheets for executing the tests of section 8. There are two worksheets for each test, an equipment list and a test procedure checklist.

Use the test equipment list to record the model number and serial number of each measurement device used. Attach a copy of the relevant inspection report or calibration certificate after the range and accuracy of the equipment has been verified.

Quality Control will initial each step on the check list as it is executed and record data as required. The **Engineering, Regulatory Affairs** and **Quality Assurance** representatives must witness all testing to ensure that it is performed in accordance with this test plan and 10 CFR 71.

Checklist 1: *Specimen Preparation and Inspection*

Step	TP84(A)	TP84(B)	
1. Total package weight (lb).			
2. Are all fabrication and inspection records documented in accordance with the AEAT Q.A. Program?			
3. Does the test unit comply with the requirements of Drawing R86590 Rev. A.			
4. Has the radiation profile been recorded in accordance with AEAT/QSA Work Instruments WI-Q09?			
5. Is the package prepared for transport?			
Steps 1 through 5 witnessed and verified by:	Print Name	Signature	Date
Engineering:			
Regulatory Affairs:			
Q.A.:			

Equipment List 1: *Compression Test Equipment*

Description	**Enter the Model and Serial Number**	**Attach Inspection Report or Calibration Certificate**
Compression Test Loading Plate.		
Test Weights.		
Test Surface.		
Record any additional tools used to facilitate the test and attach the appropriate inspection report or calibration certificate		
Signature:	Print Name	Date
Completed by:		
Verified by:		

Checklist 2: *Compression Test*

Test Location:

Step	Specimen TP84(A)	Specimen TP84(B)
1. Position the specimens as shown in the referenced figure.	Figure 8.5.2.1	
2. Record the ambient temperature:		
3. Record applied load.		
4. Note the instrument used for the temperature measurement:		
5. Measure and record each specimens overall dimensions pre-test.		
6. Place the weights onto the loading platform and leave for 24 hours.		
7. Measure and record each specimens overall dimensions post-test.		
8. Record damage to the test specimen on a separate sheet and attach.		
Test Witnessed by: Signature:	Print Name	Date
Engineering:		
Regulatory Affairs:		
Quality Assurance:		

Equipment List 2: *Penetration Test Equipment*

Description	Enter the Model and Serial Number	Attach Inspection Report or Calibration Certificate
Penetration Bar.		
Drop Surface.		
Record any additional tools used to facilitate the test and attach the appropriate inspection report or calibration certificate		
Signature	Print Name	Date
Completed by:		
Checked by:		

Checklist 3: *Penetration Test*

Test Location:

Step	Specimen TP84(B)	Specimen TP84(B)
1. Position the specimen as shown in the referenced figure.	Figure 8.6.2.1	Figure 8.6.3.1
2. Inspect the orientation set-up and verify the bar height.		
3. Record the ambient temperature:		
4. Note the instrument used for the temperature measurement:		
5. Start the video recorder.		
6. Release the penetration bar. Check to ensure that the penetration bar hit the specified area.		
7. Record damage to the test specimen on a separate sheet and attach.		
8. Engineering, Regulatory Affairs and Quality Assurance make preliminary assessment relative to 10 CFR 71. Record the assessment on a separate sheet and attach. Determine what changes, if any, are necessary in package orientation for the 1.2m (4 foot) drop test to achieve maximum damage.		
Test witnessed by: Signature:	Print Name	Date
Engineering:		
Regulatory Affairs:		
Quality Assurance:		

Equipment List 3: *1.2m (4 foot) Drop Equipment List*

Description	Enter the Model and Serial Number	Attach Inspection Report or Calibration Certificate
Drop Surface.		
Record any additional tools used to facilitate the test and attach the appropriate inspection report or calibration certificate		
Signature	Print Name	Date
Completed by:		
Verified by:		

Checklist 4: *1.2m (4 foot) Free Drop*

Test Location

Step	Specimen TP84(A)	Specimen TP84(B)
1. Measure and record the ambient temperature (°C).		
2. Note the instrument used:		
3. Attach the test specimen to the release mechanism.		
4. Lift and orientate the test specimen as shown in the referenced figure for the specimen.	Figure 8.7.2.1	Figure 8.7.3.1
5. Inspect the orientation set-up and verify the drop height.		
6. Photograph the set-up in at least two perpendicular planes.		
7. Begin video recording of the test so that impact is recorded.		
8. Release the test specimen.		
9. Record the damage to the test specimen on a separate sheet and attach.		
10. Engineering, Regulatory Affairs and Quality Assurance make preliminary assessment relative to 10 CFR 71. Record the assessment on a separate sheet and attach. Determine what changes, if any, are necessary in package orientation for the 9m (30 foot) free drop test to achieve maximum damage.		
Test witnessed by: Signature	Print Name	Date
Engineering:		
Regulatory Affairs:		
Quality Assurance:		

Equipment List 4: *9m (30 foot) Drop Equipment List*

Description	Enter the Model and Serial Number	Attach Inspection Report or Calibration Certificate
Thermometer		
Record any additional tools used to facilitate the test and attach the appropriate inspection report or calibration certificate		
Signature	Print Name	Date
Completed by:		
Verified by:		

Checklist 5: *9m (30 foot) Drop*

Test Location:

Step	Specimen TP84(A)	Specimen TP84(B)
1. Measure and record the ambient temperature (°C) Note the instrument used:		
2. Attach the test specimen to the release mechanism.		
3. Lift and orientate the test specimen as shown in the referenced figure for the specimen.	Figure 8.9.2.1	Figure 8.9.3.1
4. Inspect the orientation set-up and verify the drop height.		
5. Photograph the set-up in at least two perpendicular planes.		
6. Begin video recording of the test so that impact is recorded.		
7. Release the test specimen		
8. Pause the video recorder. Ensure that the point of impact and the orientation specified in the plan have been achieved and recorded.		
9. Record the damage to the test specimen on a separate sheet and attach.		
10. Engineering, Regulatory Affairs and Quality Assurance make a preliminary assessment relative to 10CFR 71. Record the assessment on a separate sheet and attach. Determine what changes, if any, are necessary in package orientation for the puncture test to achieve maximum damage.		
Test witnessed by (Signature)	Print Name	Date
Engineering:		
Regulatory Affairs:		
Quality Assurance:		

Equipment List 5: *Puncture Test Equipment*

Description	Enter the Model and Serial Number	Attach Inspection Report or Calibration Certificate
Puncture Billet.		
Thermometer		
Record any additional tools used to facilitate the test and attach the appropriate inspection report or calibration certificate		
Signature	Print Name	Date
Completed by:		
Verified by:		

Checklist 6: *Puncture Test*

Test Location:

Step	Specimen TP84(A)	Specimen TP84(B)	
1. Measure and record the ambient temperature (°C).			
2. Note the instrument used:			
3. Attach the test specimen to the release mechanism			
4. Lift and orientate the test specimen as shown in the referenced figure for the specimen.	Figure 8.10.2.1	Figure 8.10.3.1	Figure 8.10.4.1
5. Inspect the orientation set-up and verify the drop height.			
6. Photograph the set-up in at least two perpendicular planes.			
7. Begin video recording of test so that the impact is recorded.			
8. Release the test specimen.			
9. Pause the video recorder. Ensure that the point of impact and orientation specified in the plan have been achieved and recorded.			
10. Record damage to test specimen on a separate sheet and attach.			
11. Device Profile Complete.			
12. Engineering, Regulatory Affairs and Quality Assurance make a preliminary assessment relative to 10CFR 71. Record the assessment on a separate sheet and attach.			
Test witnessed by: Signature	Print Name	Date	
Engineering:			
Regulatory Affairs:			
Quality Assurance:			

APPENDIX A

Drawing R86590 Rev.A

REV	ENGINEER	DATE	DESCRIPTION	
A	TA	12/28/92	REDRAWN. ORIGINAL IS OBSOLETE AND FILED.	1198

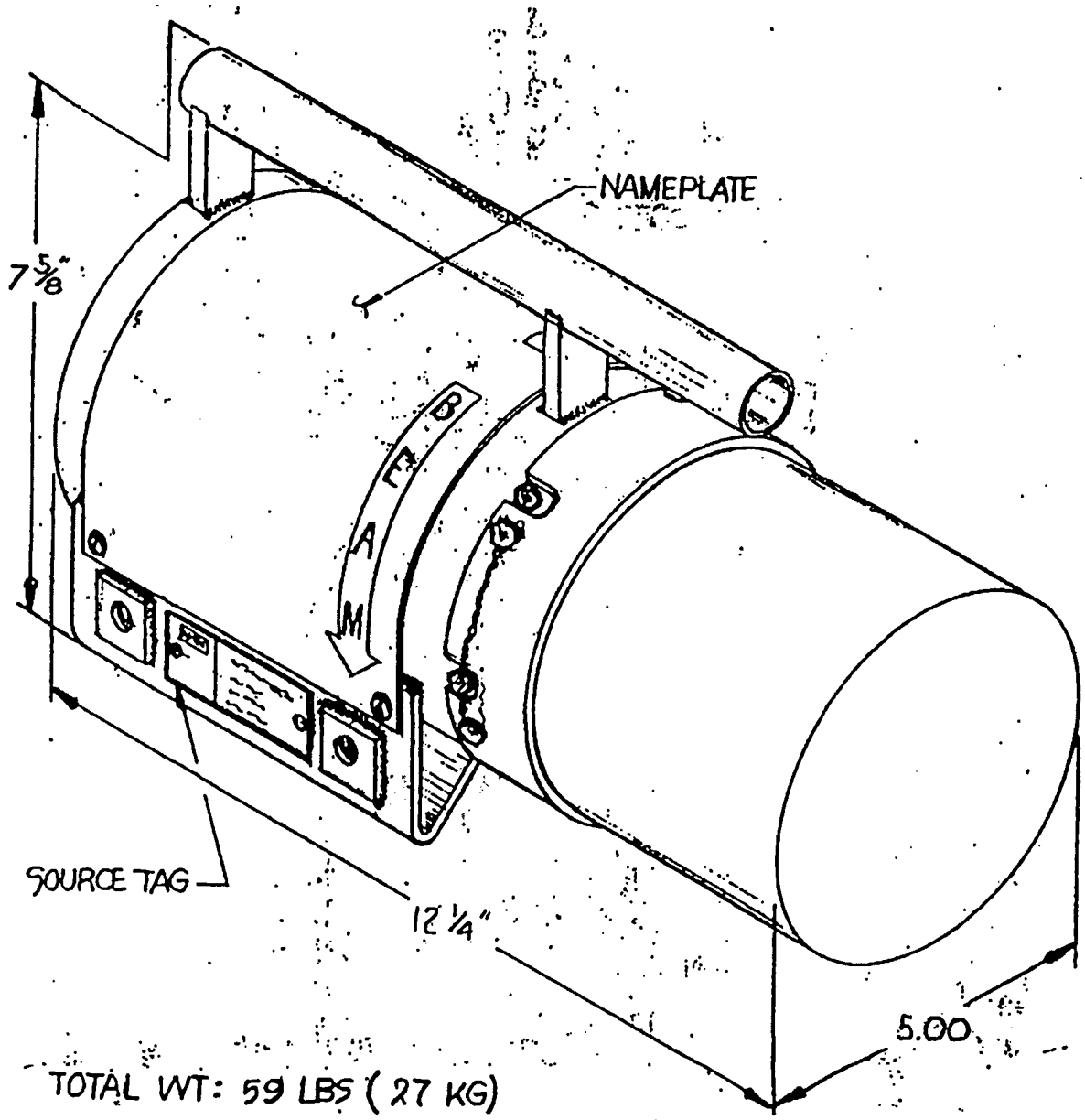

TOTAL WT: 59 LBS (27 KG)

USED ON:

RELEASED FOR PRODUCTION ON _____ BY _____

MATERIALS:

AMERSHAM CORPORATION
BURLINGTON, MA 01803

Amersham

FINISH

DWG: TITLE

MODEL 865 TYPE B PROJECTOR
DESCRIPTIVE ASSEMBLY

DATE	8/17/93	
PREPARED	TA	
ENGINEER		
CHECKED	B.P.	8/24/93
APPROVED		

UNLESS OTHERWISE SPECIFIED TOLERANCES ARE

.X	±0.1
.XX	±0.01
.XXX	±0.005
ANGLES	±1°
FRACT	±1/16

CLASSIFICATION	SIZE	DWG. NO.	REV
	A	86590	A

SCALE NONE SHEET 1 OF 5

FIGURE WITHHELD UNDER 10 CFR 2.390

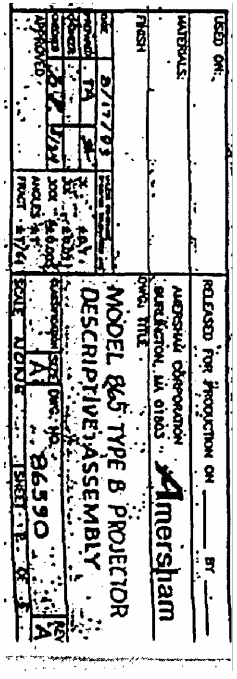

FIGURE WITHHELD UNDER 10 CFR 2.390

FIGURE WITHHELD UNDER 10 CFR 2.390

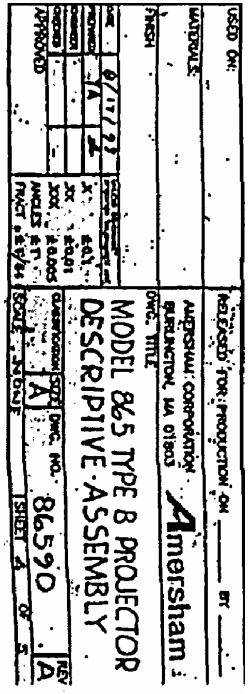

FIGURE WITHHELD UNDER 10 CFR 2.390

USED ON:	RELEASED FOR PRODUCTION ON _____ BY _____
MATERIALS:	AMERSHAM CORPORATION BURLINGTON, MA 01803 Amersham
FINISH	DWG. TITLE MODEL 865 TYPE B PROJECTOR DESCRIPTIVE ASSEMBLY
DATE 8/17/93	
PREPARED TA	
CHECKED	
CHECKED	
APPROVED	
X ±0.1 XX ±0.01 XXX ±0.005 ANGLES ±1° FRACT. ±1/64	CLASSIFICATION SIZE A DWG. NO. 86590 REV. A
	SCALE NONE SHEET 1 OF 5

Section 2.12.2 Appendix: Test Plan 84 Report Minus Appendix A (March 2000).

AEATECHNOLOGY
QSA

TEST PLAN NO. 84, Revision 1

TEST PLAN COVER SHEET

TEST TITLE: MODEL 865 UNDERWATER PROJECTOR	
PRODUCT MODEL: MODEL 865	
ORIGINATED BY: Gravatom (see attached cover sheet)	DATE:

TEST PLAN REVIEW

ENGINEERING APPROVAL: Thomas J. Marrin	DATE: 12 MAR 99
QUALITY ASSURANCE APPROVAL: Daniel W. Kurtz	DATE: 12 Mar 99
REGULATORY APPROVAL: Cathleen Rongen	DATE: 12 Mar 99
COMMENTS:	

TEST RESULTS REVIEW

ENGINEERING APPROVAL: [illegible]	DATE: 09 MAR 00
QUALITY ASSURANCE APPROVAL: D.W. Kurtz	DATE: 24 MAR 00
REGULATORY APPROVAL: C. Rongen	DATE: 24 Mar 00

SENTINEL

TEST PLAN 84
REPORT

MODEL 865 RADIOGRAPHIC EXPOSURE DEVICE

March 2000

AEA Technology QSA Inc.
40 North Avenue
Burlington
MA 01803
USA

Prepared For:

M.Tremblay
AEAT/QSA

Prepared By:		Date
G.V.Holden GESL		9th March 2000
Checked By:		Date
P.E.Cullum GESL		9th March 2000
Approved By:		Date
G.M.Bates GESL		9th March 2000

received
03-09-00

TABLE OF CONTENTS

1. INTRODUCTION 1

2. REGULATORY REQUIREMENTS 1

3. TEST UNIT DESCRIPTION AND CONFORMANCE 1

4. NORMAL CONDITIONS OF TRANSPORT TEST RESULTS 2

4.1 Compression Test 2

4.2 Penetration Test 3

4.3 1.2 m (4 foot) Free Drop Test 5

4.4 Intermediate Test Inspection 5

5. ACCIDENT CONDITIONS OF TRANSPORT TEST RESULTS 6

5.1 9 m (30 foot) Free Drop Test 6

5.2 Puncture Test 9

6. POST TEST DISASSEMBLY AND INSPECTION 12

6.1 Test Unit TP84(A) 12

6.2 Test Unit TP84(B) 13

7. CONCLUSION 14

APPENDIX A ..... CALIBRATION RECORDS
APPENDIX B ..... MANUFACTURING ROUTE CARDS AND RADIATION PROFILE DATA SHEETS
APPENDIX C ..... TEST CHECKLISTS AND DATA SHEETS

TABLE OF FIGURES

Figure 1:Compression test set-up 2

Figure 2:Test specimen TP84(A) penetration test set-up 3

Figure 3:Penetration damage to cover bolt on TP84(A) 3

Figure 4:Test specimen TP84(B) penetration test set-up 4

Figure 5:Penetration damage to TP84(B) beam port 4

Figure 6:Test specimen TP84(A) 4 foot drop set-up 5

Figure 7:Test specimen TP84(B) drop test set-up 5

Figure 8:Test specimen TP84(A) 30 foot drop set-up for first attempt 6

Figure 9:Buckling of top cover of TP84(A) after first 30 foot drop attempt 6

Figure 10:Test specimen TP84(A) 30 foot drop set-up for second attempt 7

Figure 11:Damage to TP84(A) following second 30 foot drop attempt 7

Figure 12:Test specimen TP84(B) 30 foot drop set-up 8

Figure 13:Puncture test set-up for TP84(A) 9

Figure 14:Puncture test damage to TP84(A) 9

Figure 15:Puncture test set-up for TP84(B) drop 1 10

Figure 16:Puncture test damage to TP84(B) following drop 1 10

Figure 17:Puncture test set-up for TP84(B) drop 2 11

Figure 18:Puncture test damage to TP84(B) following drop 2 11

Figure 19:Damage to TP84(A) actuator assembly 12

Figure 20:Brittle failure of TP84(A) source rod 13

Figure 21:Damage to TP84(B) actuator assembly 13

1. INTRODUCTION

This report describes the results of the tests performed on two Model 865 test specimens between the 1st and 17th of March 1999 in support of the application for renewal of the existing Type B(U) certificate of compliance, number 9187. The tests were completed in accordance with Test Plan 84 which is approved by the Nuclear Regulatory Commission (NRC).

2. REGULATORY REQUIREMENTS

Test Plan 84 describes the test unit, testing sequence, test unit orientations and testing conditions designated to challenge the Model 865 against the normal conditions of transport requirements of 10 CFR 71.71(c)(7),(9) and (10), and the accident conditions of transport requirements of 10 CFR 71.73(c)(1) and (3). Each test specimen was initially subjected to normal conditions of transport tests followed by accident conditions of transport tests, although this is not a specific requirement of the regulations.

The tests are assessed against the Type B package requirements of 10 CFR 71.51(a)(1) and (2), repeated below for reference:

71.51 Additional requirements for Type B packages

(a) Except as provided in 71.52, a Type B package, in addition to satisfying the requirements of 71.41 through 71.47, must be designed, constructed, and prepared for shipment so that under the tests specified in:

(1) Section 71.71 ("Normal conditions of transport"), there would be no loss or dispersal of radioactive contents-as demonstrated to a sensitivity of 10^{-6} A_2 per hour, no significant increase in external surface radiation levels, and no substantial reduction in the effectiveness of the packaging; and

(2) Section 71.73 ("Hypothetical accident conditions"), there would be no escape of krypton-85 exceeding $10A_2$ in 1 week, no escape of other radioactive material exceeding a total amount A_2 in 1 week, and no external radiation dose rate exceeding 10 mSv/h (1 rem/h) at 1m (40 in) from the external surface of the package.

3. TEST UNIT DESCRIPTION AND CONFORMANCE

TP84 Checklist 1: *Specimen Preparation and Inspection*

Two Model 865 test units were produced in accordance with Section 8.3 of Test Plan 84. Both test units exceeded the minimum weight of 59 lbs specified in Section 6 of Test Plan 84. The units, described fully in the test plan, are almost entirely constructed of stainless steel with a depleted uranium shield and are not subject to brittle fracture at low temperatures. Further, the temperature difference between ambient and 100°F is insignificant with respect to these materials. As such, the units were tested at ambient.

Figure 21 shows the actuator assembly leaning towards the left side on which the lock is located. The distortion of the outer casing caused by the 30 foot drop onto this side was minimal, implying that high deceleration forces were exerted on the actuator assembly and shield. The inertia of the actuator assembly, tending to cause rotation of the actuator, may have been responsible for applying tensile loads to the bolts and causing bending of the top plate. A witness mark was visible on the actuator base which may have been due to the rotation of the actuator assembly.

The device was connected to a Pressure Control Unit and the actuator piston was moved to the expose position, coming to rest when the source rod was stopped by the locking pin, indicating that the actuator was still connected to the source rod. The lock assembly was intact and operational. When the device was unlocked the piston operated correctly. The device was then re-locked. The actuator was removed revealing the source rod which was locked in position, implying that the source was secure. Final profiling of TP84(B) shows a peak intensity of 0.7 mR/hr at 1 m from the package surface, well below the limit of 1 R/hr specified by the regulations. Additionally, there was no significant increase in radiation levels anywhere on the device, indicating that the normal condition testing had no effect on those levels.

7. CONCLUSION

Both test specimens TP84(A) and TP84(B) have been subjected to the normal and accident tests specified in the approved Test Plan 84. The test results described in this report show that the test specimens conformed to the Type B requirements of 10 CFR 71.

The projector weldment remained intact showing no signs of tearing or fracture. As such, there was no direct flame path to the depleted uranium shield so oxidation of the shield during a fire test could not occur. In addition, the shell was only minimally deformed in one specimen, and not to an extent as to allow movement of the shield or source which would have resulted in increased radiation levels. Therefore, the assessment by Engineering, Regulatory and QA determined that it was not necessary to perform the thermal test on either specimen.

4. NORMAL CONDITIONS OF TRANSPORT TEST RESULTS

4.1 Compression Test

TP84 Equipment list 1: *Compression Test Equipment*
TP84 Checklist 2: *Compression Test*

Test units TP84(A) and TP84(B) were subjected to a combined compression test as per Section 8.5 of Test Plan 84. Checklist 2 records the test data and results. A total of 649 lbs. was applied to the two (2) units. The recorded dimensions, 1-4, were measured from the top of the loading platform to the concrete test surface, and are defined as shown in figure 1.

Figure 1:Compression test set-up

No visible damage was reported following the test and the testing sequence was continued.

4.2 Penetration Test

TP84 Equipment list 2: *Penetration Test Equipment*
TP84 Checklist 3: *Penetration Test*

Test units TP84(A) and TP84(B) were subjected to the penetration tests (bar dropped from 40") per Section 8.6 of Test Plan 84. Test data and results were recorded on checklist 3 together with one data sheet for each test specimen. It was reported on the data sheet relating to test specimen TP84(A) that the first test had to be repeated because the penetration bar struck the package foot instead of the target cover bolt. Subsequent tests were performed successfully with a guide tube. The penetration test set-up and results required by Test Plan 84 are shown in the figures below.

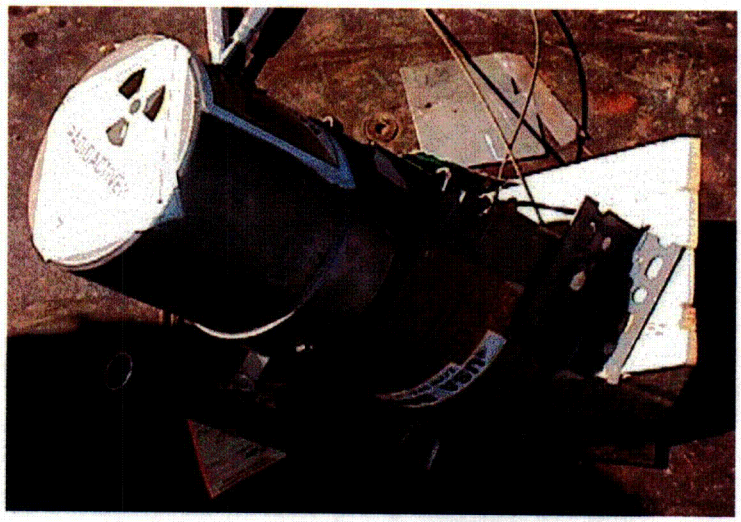

Figure 2:Test specimen TP84(A) penetration test set-up

Test specimen TP84(A) was securely fixed to a block mounted to the test figure such that the penetration bar was able to strike the cover bolt and exert the maximum stress in the bolt. The bolt head was struck on the second attempt causing a witness mark as shown in figure 3 below.

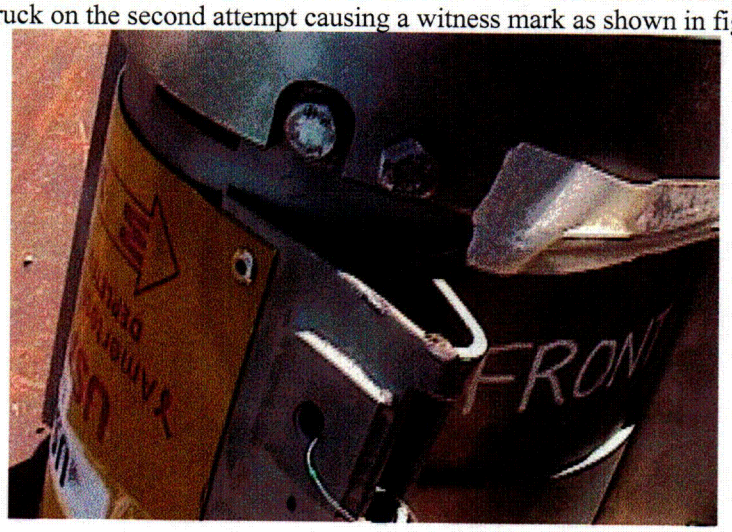

Figure 3:Penetration damage to cover bolt on TP84(A)

The second penetration test was intended to challenge the thinner shell around the beam port of the projector weldment. Figure 4 (Specimen TP84(B)) shows that the test was set up such that the penetration bar would strike the center of the beam port causing maximum damage.

Figure 4:Test specimen TP84(B) penetration test set-up

Figure 5 shows the indentation caused by the impact of the penetration bar. Both test specimens were impacted as intended and were assessed following the test. The damage was not considered sufficient to warrant suspension of the test sequence.

Figure 5:Penetration damage to TP84(B) beam port

4.3 1.2 m (4 foot) Free Drop Test

TP84 Equipment list 3: *1.2m (4 foot) Drop Equipment List*
TP84 Checklist 4: *1.2m (4 foot) Free Drop*

Test units TP84(A) and TP84(B) were subjected to the 1.2m (4 foot) free drop tests per Section 8.7 of Test Plan 84. The drop test orientation for each package is shown in figures 6 and 7 below. TP84(A) was dropped to impact on the top of the cover protecting the actuator mechanism. TP84(B) was impacted on the side next to the lock. Both specimens impacted correctly.

Figure 6:Test specimen TP84(A) 4 foot drop test set-up

Figure 7:Test specimen TP84(B) 4 foot drop test set-up

No significant damage was caused by either of these drops as recorded in the associated test data sheets.

4.4 Intermediate Test Inspection

A visual intermediate test inspection was performed and the damage caused in the normal conditions tests was considered negligible (i.e. no profile was performed). It was agreed by Engineering, Regulatory and QA that the hypothetical accident conditions tests would be performed immediately following the normal testing sequence without additional inspections.

5. ACCIDENT CONDITIONS OF TRANSPORT TEST RESULTS

5.1 9 m (30 foot) Free Drop Test

TP84 Equipment list 4: *9m (30 foot) Drop Equipment List*
TP84 Checklist 5: *9m (30 foot) Drop*

Test units TP84(A) and TP84(B) were subjected to the 9m (30 foot) free drop tests per Section 8.9 of Test Plan 84. Test unit TP84(A) was dropped flat onto the top cover. This drop was difficult due to the center of gravity of the Model 865 tending to rotate the package onto the base from this height. Two attempts were made on this specimen to achieve this flat drop.

Figure 8:Test specimen TP84(A) 30 foot drop set-up for first attempt

Figure 8 shows the test set up for the first attempt at the test drop for TP84(A). The unit was observed to rotate and strike the target cover causing local buckling as shown in figure 9. Two of the cover bolts on the impact side were slightly deformed.

Figure 9:Buckling of top cover of TP84(A) after first 30 foot drop attempt

Because of the oblique impact in the first drop test of TP84(A) it was decided to attempt an additional drop on the same specimen. The set up for the second attempt is shown in figure 10 below.

Figure 10:Test specimen TP84(A) 30 foot drop set-up for second attempt

The second attempt on test specimen TP84(A) resulted in similar rotation and impact orientation to drop one. Consequently, the buckling damage caused by the first drop was exacerbated, however, no further damage was observed to the cover bolts. The post test damage is shown in figure 11.

Figure 11:Damage to TP84(A) following second 30 foot drop attempt

Following the second attempt an assessment was done by engineering, regulatory and QA. It was decided that a true flat drop would be extremely difficult to achieve. Furthermore, the cumulative effects of the 30 foot drop tests carried out on test specimen TP84(A) were considered to be worse than a single flat drop as originally planned. No significant damage was evident so the test sequence for TP84(A) was continued.

Test specimen TP84(B) was dropped onto the left side in order to attempt to break the lock assembly. The test set up is shown in figure 12.

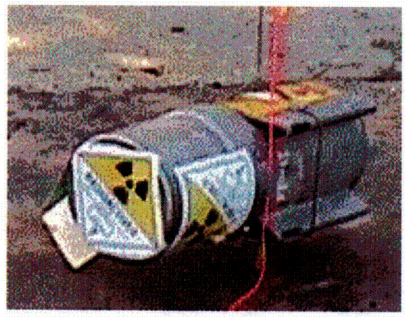

Figure 12:Test specimen TP84(B) 30 foot drop set-up

The test unit impacted as intended and struck the drop surface flat on the left side causing slight flattening of the unit along the line of impact. The planned test sequence for TP84(B) was continued.

5.2 Puncture Test

TP84 Equipment list 5: *Puncture Test Equipment*
TP84 Checklist 6: *Puncture Test*

Test units TP84(A) and TP84(B) were subjected to the 4 foot puncture tests as per Section 8.10 of Test Plan 84. The test set up for specimen TP84(A) is shown in figure 13.

Figure 13:Puncture test set-up for TP84(A)

The target for this test (TP84(A)) was a cover bolt. The bolt head was hit during the primary impact. There were secondary impacts on the shell and leg of the unit. There was some deformation of the leg as shown in figure 14.

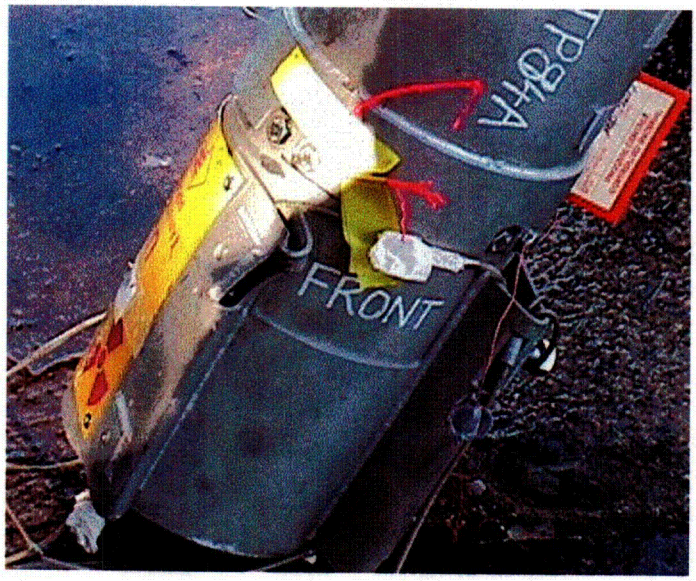

Figure 14:Puncture test damage to TP84(A)

Following the puncture test to TP84(A) the device was still fully intact with no broken or missing parts evident externally.

Specimen TP84(B) was dropped three times onto the puncture billet. Figure 15 shows the set up for the first drop which was intended to target the beam port.

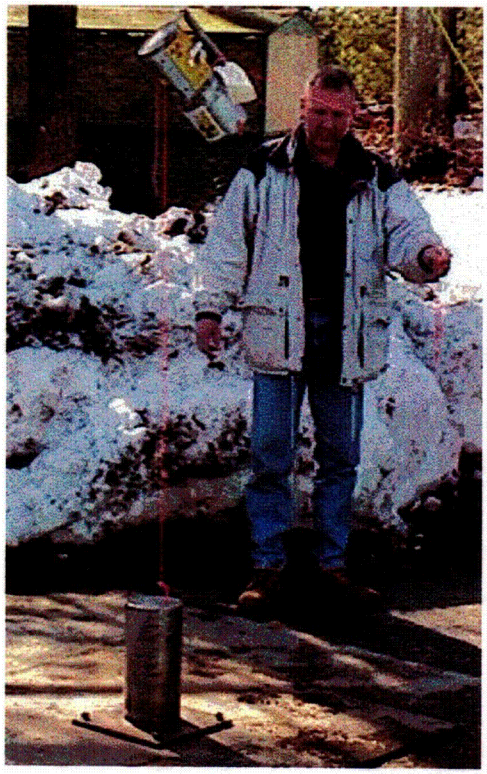

Figure 15:Puncture test set-up for TP84(B) drop 1

The test data sheet describes how in the primary impact the test unit rotated after hitting the legs such that the target beam port did not strike the puncture billet. The test was repeated successfully. The damage to TP84(B) is shown in figure 16.

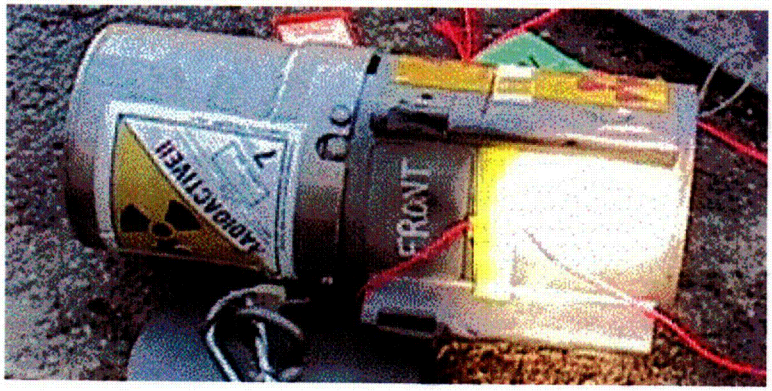

Figure 16:Puncture test damage to TP84(B) following drop 1

TP84(B) was deemed fit to continue with the testing sequence following puncture drop 1. The test set up for puncture drop 2 is shown in figure 17.

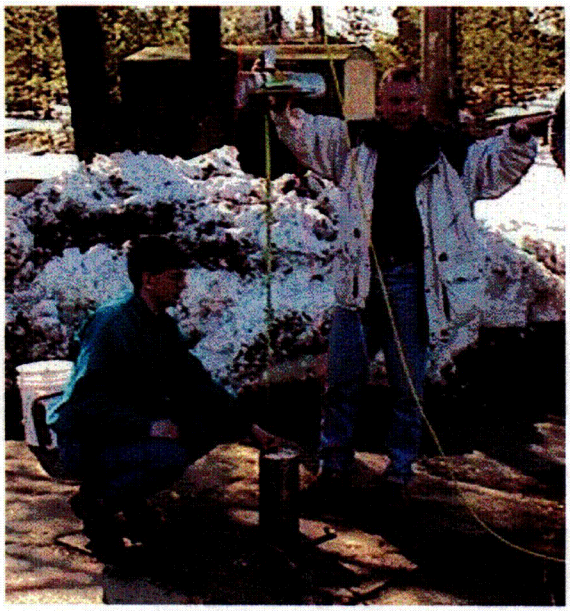

Figure 17:Puncture test set-up for TP84(B) drop 2

The target for drop 2 was again the lock assembly. The test data sheet indicates that the unit hit the specified point and that no further damage was caused to the device, see figure 18.

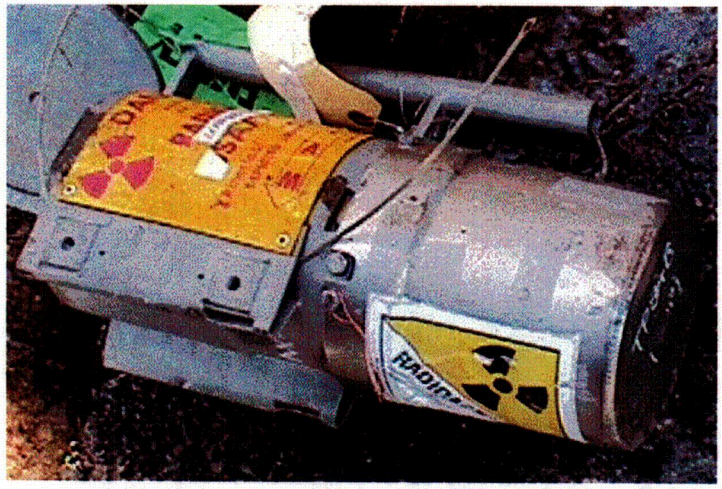

Figure 18:Puncture test damage to TP84(B) following drop 2

Following the puncture tests performed on TP84(B) the device was complete with no broken or missing parts.

6. POST TEST DISASSEMBLY AND INSPECTION

6.1 Test Unit TP84(A)

The test data sheet describes the post-test examination performed on TP84(A). This unit was dropped twice from 30 feet suffering compounded damage. Both covers were removed with all fixing bolts in good condition showing no indication of strain. After removal of the shipping and actuator cover it was evident, by the presence of a witness mark on the inside of the cover, that the actuator cover had struck the actuator assembly, bending the actuator holding down bolts, see figure 19.

Figure 19:Damage to TP84(A) actuator assembly

The actuator assembly was removed. The source rod was found to be fractured at the base of the thread which joins the source rod to the actuator assembly, see figure 20. The source rod remained secure in the locked position indicating no movement of the source throughout the test sequence. The lock assembly was not damaged and was operational.

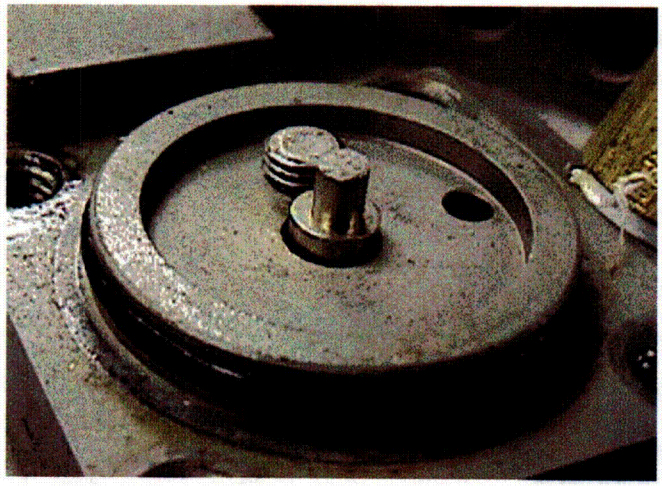

Figure 20:Brittle failure of TP84(A) source rod

Test unit TP84(A) was reassembled with an active source for final profiling. The profile sheet shows a maximum intensity of 0.5 mR/hr at 1 m from the package surface, well below the limit of 1 R/hr specified by the regulations. Additionally, there was no significant increase in radiation levels anywhere on the device, indicating that the normal condition testing had no effect on those levels.

6.2 Test Unit TP84(B)

The test data sheet describes the post-test examination performed on TP84(B). This unit was subjected to three puncture tests suffering compounded damage. Both the shipping and actuator covers were removed. Some of the fixing bolts and their corresponding location holes in the cover showed indications of strain. After removal of the shipping and actuator covers it was evident that the actuator assembly and hold down bolts were distorted, see figure 21.

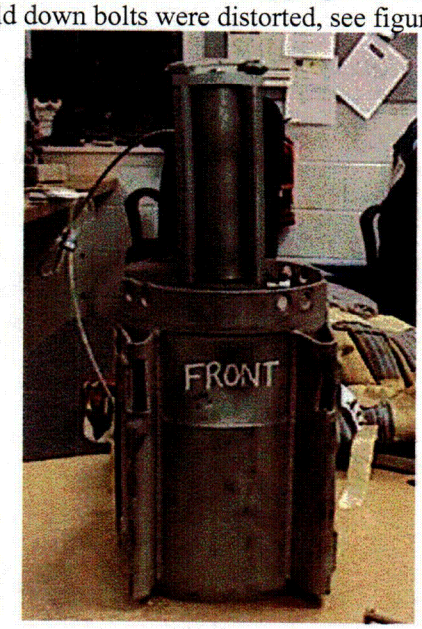

Figure 21:Damage to TP84(B) actuator assembly

Figure 21 shows the actuator assembly leaning towards the left side on which the lock is located. The distortion of the outer casing caused by the 30 foot drop onto this side was minimal, implying that high deceleration forces were exerted on the actuator assembly and shield. The inertia of the actuator assembly, tending to cause rotation of the actuator, may have been responsible for applying tensile loads to the bolts and causing bending of the top plate. A witness mark was visible on the actuator base which may have been due to the rotation of the actuator assembly.

The device was connected to a Pressure Control Unit and the actuator piston was moved to the expose position, coming to rest when the source rod was stopped by the locking pin, indicating that the actuator was still connected to the source rod. The lock assembly was intact and operational. When the device was unlocked the piston operated correctly. The device was then re-locked. The actuator was removed revealing the source rod which was locked in position, implying that the source was secure. Final profiling of TP84(B) shows a peak intensity of 0.7 mR/hr at 1 m from the package surface, well below the limit of 1 R/hr specified by the regulations. Additionally, there was no significant increase in radiation levels anywhere on the device, indicating that the normal condition testing had no effect on those levels.

7. CONCLUSION

Both test specimens TP84(A) and TP84(B) have been subjected to the normal and accident tests specified in the approved Test Plan 84. The test results described in this report show that the test specimens conformed to the Type B requirements of 10 CFR 71.

The projector weldment remained intact showing no signs of tearing or fracture. As such, there was no direct flame path to the depleted uranium shield so oxidation of the shield during a fire test could not occur. In addition, the shell was only minimally deformed in one specimen, and not to an extent as to allow movement of the shield or source which would have resulted in increased radiation levels. Therefore, the assessment by Engineering, Regulatory and QA determined that it was not necessary to perform the thermal test on either specimen.

APPENDIX A

CALIBRATION RECORDS

APPENDIX B

MANUFACTURING ROUTE CARDS AND RADIATION PROFILE DATA SHEETS

865 TYPE B TESTING
PACKAGE FABRICATION SUMMARY

S/N 51, 52, 57

The Type B package verification testing is to be performed using existing Model 865 devices. A brief overview of the fabrication history and supporting documentation is provided below.

The Model 865 transport packages were fabricated in 1996. (The basis for the current QA program was implemented in 1992.) The following fabrication records have been compiled for each of the Model 865 test packages.

- Overall Assembly:
  - Route Card
  - Inspection Record
  - Original Profile Data Sheets
  - Current Profile Data Sheets

- "A" Subassemblies and Components:
  - Weldment Assembly Route Card and Inspection Record
    - Housing Weldment Inspection Record and Material Certificate of Conformance
    - DU Shield Inspection Record and Material Certificate of Conformance
  - Source Rod and Capsule Holder Assembly Route Card and Inspection Record
    - Source Rod Inspection Record and Material Certificate of Conformance
    - Source Cap Holder Inspection Record and Material Certificate of Conformance
    - Roll Pin Inspection Record, Purchase Order and Material Certificate of Conformance

Based on a review of these fabrication records and visual inspection of the packages, it is concluded that the test packages have been fabricated in accordance with the applicable QA Program requirements and that the packages comply with the test plan requirements.

N L Marrone 5 MAR 99
Nicholas L Marrone

SENTINEL

ROUTE CARD

Serial Number 51

OCL# 555 MRB 6 Aug 96

CH: A

COMPLETE LOT N/A
SPLIT LOT N/A

TOTAL WO QTY: 15
RTE. CD. QTY: 1

LOT NO: N/A
SUB-LOT NO: N/A

PART NUMBER	DESCRIPTION	DRAWING NUMBER	REVISION	WORK ORDER NUMBER
86501	Projector Weldment	D 86501	G	M076840

MRB 20 Aug 96 A-Oper Seq. 0100

OPER SEQUENCE	DEPARTMENT	OPERATION DESCRIPTION	BY	DATE	STATUS	REFERENCE	COMMENTS
0010	MS	Mach & Assy Item 3&4	LOT	1-Aug-96	N/A	SOP - P024	Upper & Lower Shield Support Ring
0020	QC	Inspect Items 3&4	[illegible]	1 Aug 96	ACC	D 86501	Verify Tight Fit on Shield
0030	MS	Assemble	DRB	5 Aug 96	N/A	SOP-P024	
0040	QC	Inspect	MRB	5 Aug. 96	ACC	SOP-P024	Verify Alignment of Scribe Mark
0050	MS	Weld	DRB	6 Aug 96	N/A	SOP- P024	Item 8 to 2 & Item 6 to 2
0055	MS	Weld Repair	DRB	9 Aug 96	N/A	SOP-P024	Weld Rej. Areas Only MRB 9 Aug 96
0060	QC	Inspect Weld	MRB	6 Aug 96	Reject	D 86501	Item 8 to 2 & Item 6 to 2 MRB 6 Aug 96 ACC 5627
0065	QC	Inspect Weld Repair	MRB	9 Aug 96	ACC	D86501	
0070	MS	Weld	DRB	12 Aug 96	N/A	D 86501	Item 7 to 2
0080	QC	Inspect Weld	[illegible]	12 Aug 96	ACC	D 86501	Item 7 to 2
0090	MS	Machine	DT	13 Aug 96	N/A	D 86501	Note 7 & 8
0100	QC	Inspect	MRB	11 Sept 96	ACC	SOP-Q015	

CHECKLIST			CHECKLIST			CHECKLIST		
SOP-STEP	DESCRIPTION	INITIALS	SOP-STEP	DESCRIPTION	INITIALS	SOP-STEP	DESCRIPTION	INITIALS
N/A	Install Item 9 Bronze Bearing (Note 3)	DRB						
N/A	.030 + / - .005	DT						

ENGINEERING: [illegible] 26 MAR 96
REGULATORY: [illegible] 27 Mar 96
MATERIALS: [illegible] 27 MAR 96
PRODUCTION: [illegible] 27 Mar 96
QUALITY ASSURANCE: C Ferrera 12 Mar 96
ISSUE NUMBER: 3

NO.	DESCRIPTION OF NONCONFORMANCE	DISPOSITION	INDIV/DATE	INSP/DATE
1	D 1/8 & D 3/16 Porosity	REWORK	DRB 9 AUG 96	MRB 9 Aug 96 NC
	Ind. - Actuator	CF 9 Aug 96		
	Boss Weld	RWC 9 Aug 96		
	W2 MRB 6 Aug 96			
	(OPR. STD 0060)			
	W-2			

PART NUMBER	DESCRIPTION	CH	SERIAL/ LOT NO.	INITIALS	DATE
86502	Housing Weldment	A	Lot # 96206-1	DRB	5 Aug 96
86501-3	D U Shield	A	~~Lot # 96197-1 Mt # 35289-2~~	DRB 5 Aug 96	
			Lot # 96197-1 Mt # 35313-1	DRB	5 Aug 96

CONFIGURATION

CHANGE VERIFICATION

PART NUMBER	DESCRIPTION	REV	ECO	INDIVIDUAL	VERIFIED
86501	Projector Weldment	G	2168	N/A	MRB

QA Review: C Fessera Date: 11 Sep 96

9/94 R1

SENTINEL

ROUTE CARD

SERIAL NUMBER 51

QC LOT# ____ COMPLETE LOT N/A SPLIT LOT N/A TOTAL WO QTY: 15 RTE. CD. QTY: 1 LOT NO: N/A SUB-LOT NO: N/A

CM: A

PART NUMBER	DESCRIPTION	DRAWING NUMBER	REVISION	WORK ORDER NUMBER
86501	PROJECTOR WELDMENT	D 86501	G	M0768.40

OPER SEQUENCE	DEPARTMENT	OPERATION DESCRIPTION	BY	DATE	STATUS	REFERENCE	COMMENTS
0110	QA	QA Review	CF	11 Sep 96	N/A	SOP-Q025	
0120	IC	Stock Room	JH	12 Sep 96	N/A	SOP -M002	

CHECKLIST			CHECKLIST			CHECKLIST		
SOP-STEP	DESCRIPTION	INITIALS	SOP-STEP	DESCRIPTION	INITIALS	SOP-STEP	DESCRIPTION	INITIALS

ENGINEERING: [illegible] 26 Mar 96 REGULATORY: [illegible] 27 Mar 96 MATERIALS: [illegible] 27 Mar 96

PRODUCTION: [illegible] 27 Mar 96 QUALITY ASSURANCE: C. Ferrera 12 Mar 96 ISSUE NUMBER: 3

GC 30 Sep 96

6176

AMERSHAM CORPORATION

OM-A

ROUTE CARD

SERIAL NUMBER: ~~50 THRU 64~~ 45-59

✓ COMPLETE LOT ____ SPLIT LOT

TOTAL WO QTY: 15 RTG. CD. QTY: 15

LOT NO: N/A SUB-LOT NO: N/A

PART NUMBER	DESCRIPTION	DRAWING NUMBER	REV	WORK ORDER
86504	Source Rod & Capsule Holder Assy	A86504	BC	M076860

OPER SEQ	DEPT	OPERATION DESCRIPTION	BY	DATE	STATUS	REFERENCE	COMMENTS GC 30 Sep 96
0010	MS	First Piece	DT	7-OCT-96	N/A	A86504	Deliver First Piece to QC
0020	QC	First Pc Inspection	DW	7 OCT 96	Acc	A86504	
0030	MS	Machine & Etch	LDI	7 OCT 96	N/A	A86504	
0040	QC	Final Inspection	DW	8 OCT 96	Acc	SOP-0015 & SOP-0013	
0050	QA	Review	KMA	8 Oct 96	N/A	SOP-0025	
0060	IC	Stock Room Processing	JH	9 OCT 96	N/A	SOP-M002	

CHECKLIST INITIALS	CHECKLIST DESCRIPTION	CHECKLIST SOP. STEP	CHECKLIST INITIALS	CHECKLIST DESCRIPTION	CHECKLIST SOP. STEP	CHECKLIST INITIALS	CHECKLIST DESCRIPTION	CHECKLIST SOP. STEP
LDI	Note 3 – Drill	–						
	& Tap – Chase Threads	"						

ENGINEERING: G. Parsons 3-18-94 REGULATORY: L. Rodolfo 22 MAR 94 MATERIALS: R. Morin 18 MAR 94

PRODUCTION: RW Evans 3/18/94 QUALITY ASSURANCE: R. Rhoum 22 MAR 94 ISSUE NUMBER: 2

REVISION 1

NONCONFORMANCES					CONFIGURATION					
NO.	DESCRIPTION	DISPOSITION	INDIV/DATE	INSP/DATE	PART NUMBER	DESCRIPTION	CH.	SERIAL/LOT NO.	INITIALS	DATE
* 1	6MM X .75 MM THD.	REWORK BY	*	DW 23 SEP 96	86504-1	Source Rod	A	96095-3	DW	28 Aug 96
	UNABLE TO THREAD CAP	CHASING THREADS			86504-2	Source Cap Holder	A	960274	AT	7 Oct 96
	HOLDER ON ROD M3	~~Georgeria 28 Aug 96~~			876504-3	Modified Roll Pin	A	96268-6	DW	8 Oct 96
	(PLATING THICKNESS)	~~28 Aug 96~~ MZS 28 Aug 96								
* 2	7MM X 1.0 MM THD.	REWORK BY	*	DW 23 SEP 96						
	WILL NOT ACCEPT GAGE	CHASING THREADS								
	DW 28 AUG 96 M3	~~Georgeria 28 Aug 96~~ ~~28 AUG 96~~ MZS 28 Aug 96								
*	Release 15 PCS to REC for REWORK			DW 27 SEP 96						
		PPD #00208								
		CF 28 Aug 96								

CHANGE VERIFICATION					
PART NUMBER	DESCRIPTION	REV	ECO	INDIVIDUAL	VERIFIED
86504-1	Source Rod	D	19816	AC	DW
86504	Source Rod Assy	C	2173	AC	DW

QA REVIEWED BY: K Nafey DATE: 8 Oct 96

REVISION 1

SENTINEL

SHIELDING PROFILE AND INSPECTION FORM

Model: 865 Serial Number: 51 Radionuclide: IR192 Max.Capacity: 240 Ci

Shield Data

Shield Heat#: _____ Mass of Shield: _____ Lbs. Lot #: _____

Initial Profile

Source Model: 86520 Source SN: _____ Activity: _____ Ci

Survey Inst.: _____ SN: _____ Date Cal.: _____ Date Due: _____

Surface	Observed Intensity mR/hr	Surface Correction Factor		Adjusted Intensity mR/hr
Top		1.07	N/A	
Right		1.26	Capacity Correction Factor: _____	
Front		1.26		
Left		1.26		
Rear		1.26		
Bottom		1.25		

Inspector: _____ Date: _____ NCR #: _____

Final Profile

Source Model: 86520 Source SN: 0371 Activity: 231.7 Ci Mass of Device: _____ Lbs.

Survey Inst.: AN/PDR27T SN: SM392402 Date Cal.: 80+78 Date Due: 80+99

Surface	Observed Intensity mR/hr: At Surface	Surface Corr. Factor	At One Meter		Adjusted Intensity mR/hr: At Surface	At One Meter
Top	23	1.07	.3		25	.3
Right	85	1.26	.5		110	.5
Front	85	1.26	.6	Capacity Correction Factor: 1.03	110	.6
Left	80	1.26	.5		104	.5
Rear	70	1.26	.5		91	.5
Bottom	45	1.25	.5		58	.5

Inspector: [signature] Date: 8 March 99 NCR #: N/A

QI6-1/1

Comments: _____

Amersham QSA

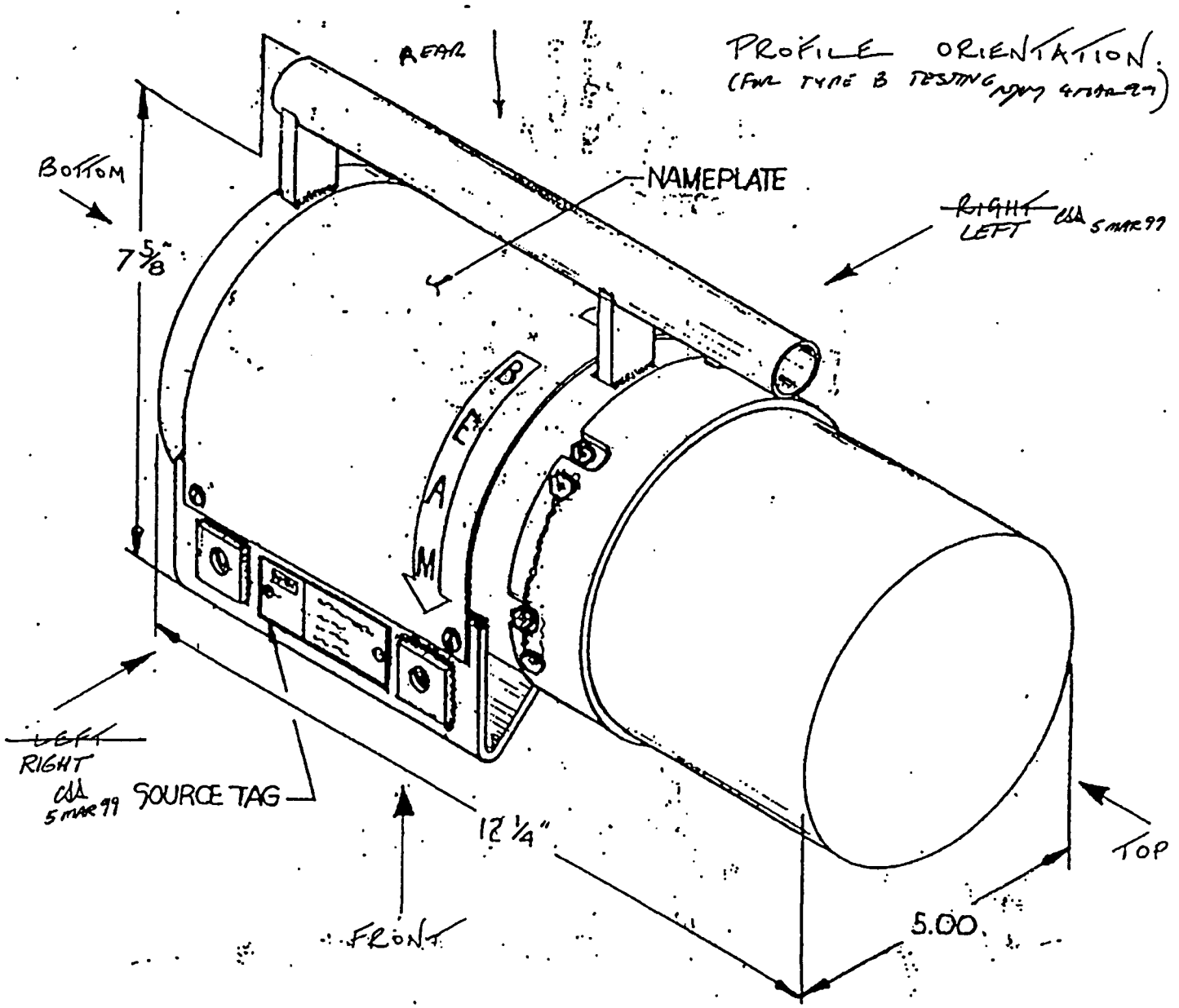
PROFILE ORIENTATION
(FOR TYPE B TESTING NMM 4 MAR 99)
REAR
BOTTOM
NAMEPLATE
~~RIGHT~~ LEFT CSA 5 MAR 99
7 5/8"
B
E
A
M
~~LEFT~~ RIGHT CSA 5 MAR 99
SOURCE TAG
12 1/4"
TOP
FRONT
5.00

Amersham Corporation
40 North Avenue
Burlington, MA 01803

SHIELDING PROFILE AND INSPECTION FORM

Model No.: 865 Serial No.: 51 Radionuclide Ir 192 Max. Capacity 240 Ci

INCOMING SHIELD INSPECTION

Lot #96177-1

Shield I.D. No. 35-313-1 Source Tube Clear of Obstructions MRB

Mass of Shield 41.45 lb. Hot Top Dimension Measured ( ) N/A

Visual Inspection MRB Tube Cut in Fixture N/A

(UAI) MRB 3 July 96

Inspector Signature MRBoyd Date 26 June 96 NCR No. 4422

SHIELDING EFFICIENCY TEST
INCOMING SHIELD ASSEMBLY

Source Model No.: 86520 Source Serial No.: 0270 Activity 180.6

Survey Instrument: PDR 68-27R Serial No.: I-130 Date Cal. 3 Apr 96 Due 3 July 96

OBSERVED INTENSITY mR/hr

	AT SURFACE	SURFACE CORRECTION FACTOR
TOP	6	1.07
RIGHT	90	1.26
FRONT	100	1.26
LEFT	90	1.26
REAR	90	1.26
BOTTOM	60	~~1.26~~ 3 July 96

CAPACITY CORRECTION FACTOR
1.3

ADJUSTED INTENSITY mR/hr

	AT SURFACE
TOP	8
RIGHT	147
FRONT	164
LEFT	147
REAR	147
BOTTOM	98

Inspector's Signature Michael A Wright Date 3 JULY 96 NCR NO. N/A

#51

FINAL DEVICE INSPECTION

Guide Tube Connection Functions Properly	N/A	Proper Identification/Labels Attached	J
Lock Functions Properly	J	Painted Surfaces Not Damaged	J
Selector Ring Functions Properly	N/A	Fasteners Installed Properly	J
Control Unit Connects Properly	J	Proper Continuity - "E" Machines Only	N/A
Source Travels Properly	J	Total Mass of Device 660.0 lb.	
Source Stores Properly	J	Rear Plate Serial No. N/A	
NCR No.: N/A		Date Inspected 14 Jan 97	

SHIELDING EFFICIENCY TEST
FINAL DEVICE ASSEMBLY

Source Model No.: 86520 Source Serial No.: 0295 Activity 175.4 ci

Survey Instrument: AMPDR27T Serial No.: SM392461 Date Cal. 6 Jan 97 Due 6 April 97

OBSERVED INTENSITY mR/hr

	AT SURFACE	SURFACE CORRECTION FACTOR	AT ONE METER
TOP	50	1.07	<.5
RIGHT	95	1.26	.6
FRONT	110	1.26	.7
LEFT	85	1.26	.6
REAR	85	1.26	.6
BOTTOM	50	1.25	<.5

CAPACITY CORRECTION FACTOR
1.36

ADJUSTED INTENSITY mR/hr

	SURFACE	AT ONE METER
TOP	73	<.7
RIGHT	155	.8
FRONT	188	1.0
LEFT	146	.8
REAR	146	.8
BOTTOM	85	<.7

Inspector's Signature M Bogd Date 21 Feb 97 NCR NO. N/A

SENTINEL

Drop Test Unit

QCL# ~~6704~~ MDB 21 Feb 97

ROUTE CARD

SERIAL NUMBER 51

COMPLETE LOT: N/A
SPLIT LOT: N/A

TOTAL WO QTY: 1
RTE. CD. QTY: 1

LOT NO: N/A
SUB-LOT NO: N/A

CM:A

PART NUMBER	DESCRIPTION	DRAWING NUMBER	REVISION	WORK ORDER NUMBER
TEN 865	Type B Underwater Projector	D86500 / BOM	E/F	M076830

OPER SEQUENCE	DEPARTMENT	OPERATION DESCRIPTION	BY	DATE	STATUS	REFERENCE	COMMENTS
0010	Assy	Assemble	KMA	13 Jan 97	N/A	SOP-P022	
0020	Assy/QC	Underwater Leakage				SOP-P022	Notify QC
		& Functional Test		13 JAN 97	ACC		(Includes 100 PSI Pressure Test)
0030	Assy	Complete Assembly	KMA	14 Jan 97	N/A	SOP-P022	
0040	QC	Final Inspection		14 JAN 97	ACC	SOP-Q015	
0050	RL	Output Verification	NA	NA	N/A	N/A	17 FEB 99 NOT required for test units DWK 17 Feb 99
0060	QC	Final Profile	MDB	21 Feb 97	ACC	WI-Q08	QCL#6924
0070	QA	QA Review		17 Feb 99	N/A	SOP-Q025	
0080	IC	Stock Room	QC	19 Feb 99	N/A	SOP-M002	

QC 17 Nov 98

CHECKLIST			CHECKLIST			CHECKLIST		
SOP-STEP	DESCRIPTION	INITIALS	SOP-STEP	DESCRIPTION	INITIALS	SOP-STEP	DESCRIPTION	INITIALS

ENGINEERING: G Parsons 26 MAR 96
REGULATORY: L Pickelle 27 Mar 96
MATERIALS: [illegible] 27 MAR 96
PRODUCTION: RW Evans 27 Mar 96
QUALITY ASSURANCE: C Ferrera 19 Mar 96
ISSUE NUMBER: 3

9/94 R1

NO.	DESCRIPTION OF NONCONFORMANCE	DISPOSITION	INDIV/DATE	INSP/DATE

CONFIGURATION

PART NUMBER	DESCRIPTION	CM	SERIAL/ LOT NO.	INITIALS	DATE
86501	Projector Weldment	A	51	KMA	13 Jan 97
			51	KMA	14 Jan 97

CHANGE VERIFICATION

PART NUMBER	DESCRIPTION	REV	ECO	INDIVIDUAL	VERIFIED
86500	GRP	F	2271		

QA Review: _____ Date: _____

9/94 R1

SENTINEL

PROFILE AFTER DROP TEST

SHIELDING PROFILE AND INSPECTION FORM

Model: 865 Serial Number: 51 Radionuclide: IR192 Max.Capacity: 240 Ci

Shield Data

Shield Heat#: _____ Mass of Shield: _____ Lbs. Lot #: _____

Initial Profile

Source Model: 86520 Source SN: _____ Activity: _____ Ci

Survey Inst.: _____ SN: _____ Date Cal.: _____ Date Due: _____

Surface	Observed Intensity mR/hr	Surface Correction Factor		Adjusted Intensity mR/hr
Top		1.07	N/A	
Right		1.26	Capacity Correction Factor: _____	
Front		1.26		
Left		1.26		
Rear		1.26		
Bottom		1.25		

Inspector: _____ Date: _____ NCR #: _____

Final Profile

Source Model: 86520 Source SN: 0373 Activity: 240.9 Ci Mass of Device: _____ Lbs.

Survey Inst.: AN/PDR27T SN: SM392402 Date Cal.: 8-0-98 Date Due: 8-0-99

Surface	Observed Intensity mR/hr: At Surface	Surface Corr. Factor	At One Meter		Adjusted Intensity mR/hr: At Surface	At One Meter
Top	30	1.07	.2		32	.2
Right	85	1.26	.5		106	.5
Front	90	1.26	.5	Capacity Correction Factor: .99	112	.5
Left	75	1.26	.5		94	.5
Rear	70	1.26	.5		87	.5
Bottom	45	1.25	.4		56	.4

Inspector: MRBaynd Date: 19March99 NCR #: N/A

QI6-1/1

Comments: _____

Amersham QSA

865 TYPE B TESTING
PACKAGE FABRICATION SUMMARY

S/N 51, 52, 57

The Type B package verification testing is to be performed using existing Model 865 devices. A brief overview of the fabrication history and supporting documentation is provided below..

The Model 865 transport packages were fabricated in 1996. (The basis for the current QA program was implemented in 1992.) The following fabrication records have been compiled for each of the Model 865 test packages.

- Overall Assembly:
  - Route Card
  - Inspection Record
  - Original Profile Data Sheets
  - Current Profile Data Sheets

- "A" Subassemblies and Components:
  - Weldment Assembly Route Card and Inspection Record
    - Housing Weldment Inspection Record and Material Certificate of Conformance
    - DU Shield Inspection Record and Material Certificate of Conformance
  - Source Rod and Capsule Holder Assembly Route Card and Inspection Record
    - Source Rod Inspection Record and Material Certificate of Conformance
    - Source Cap Holder Inspection Record and Material Certificate of Conformance
    - Roll Pin Inspection Record, Purchase Order and Material Certificate of Conformance

Based on a review of these fabrication records and visual inspection of the packages, it is concluded that the test packages have been fabricated in accordance with the applicable QA Program requirements and that the packages comply with the test plan requirements.

N L Marrone 5 MAR 99
Nicholas L Marrone

SENTINEL

PROFILE AFTER DROP TEST

SHIELDING PROFILE AND INSPECTION FORM

Model: 865 Serial Number: 52 Radionuclide: IR192 Max.Capacity: 240 Ci

Shield Data

Shield Heat#: _____ Mass of Shield: _____ Lbs. Lot #: _____

Initial Profile

Source Model: 86520 Source SN: _____ Activity: _____ Ci

Survey Inst.: _____ SN: _____ Date Cal.: _____ Date Due: _____

Surface	Observed Intensity mR/hr	Surface Correction Factor		Adjusted Intensity mR/hr
Top		1.07	N/A	
Right		1.26	Capacity Correction Factor: _____	
Front		1.26		
Left		1.26		
Rear		1.26		
Bottom		1.25		

Inspector: _____ Date: _____ NCR #: _____

Final Profile

Source Model: 86520 Source SN: 0373 Activity: 240.9 Ci Mass of Device: _____ Lbs.

Survey Inst.: AN/PDR27T SN: SM392402 Date Cal.: 8-0-98 Date Due: 8-0-99

Surface	Observed Intensity mR/hr: At Surface	Surface Corr. Factor	At One Meter		Adjusted Intensity mR/hr: At Surface	At One Meter
Top	25	1.07	.4		~~25~~ 26	.4
Right	85	1.26	.6		106	.6
Front	110	1.26	.7	Capacity Correction Factor: .99	137	~~.6~~ .7
Left	90	1.26	.6		112	.6
Rear	80	1.26	.6		100	.6
Bottom	50	1.25	.5		62	.5

Inspector: [signature] Date: 19March99 NCR #: N/A

Q16-1/1

Comments: _____

Amersham QSA

Amersham Corporation
40 North Avenue
Burlington, MA 01803

SHIELDING PROFILE AND INSPECTION FORM

Model No.: 865 Serial No.: 52 Radionuclide Ir 192 Max. Capacity 240 Ci

INCOMING SHIELD INSPECTION

Lot # 96177-1

Shield I.D. No. 35313-2 Source Tube Clear of Obstructions MB

Mass of Shield 41.5 lb Hot Top Dimension Measured ( ) N/A

Visual Inspection MB Tube Cut in Fixture N/A

Inspector Signature [signature] Date 26 June 96 NCR No. ~~N/A~~ 4422 MB 3 July 96 (UAI)

SHIELDING EFFICIENCY TEST
INCOMING SHIELD ASSEMBLY

Source Model No.: 86520 Source Serial No.: 0270 Activity 180.6

Survey Instrument: PR 68-27R Serial No.: I-130 Date Cal. 3 Apr 96 Due 3 July 96

OBSERVED INTENSITY mR/hr

	AT SURFACE	SURFACE CORRECTION FACTOR
TOP	5	1.07
RIGHT	80	1.26
FRONT	100	1.26
LEFT	90	1.26
REAR	80	1.26
BOTTOM	50	~~1.26~~ 1.25

MW 3 July 96

CAPACITY CORRECTION FACTOR
1.3

ADJUSTED INTENSITY mR/hr

	AT SURFACE
TOP	7
RIGHT	131
FRONT	164
LEFT	147
REAR	131
BOTTOM	81

Inspector's Signature [signature] Date 3 July 96 NCR NO. N/A

#52

FINAL DEVICE INSPECTION

Guide Tube Connection Functions Properly	N/A	Proper Identification/Labels Attached	MDB
Lock Functions Properly	MDB	Painted Surfaces Not Damaged	MDB
Selector Ring Functions Properly	N/A	Fasteners Installed Properly	MDB
Control Unit Connects Properly	MDB	Proper Continuity - "E" Machines Only	N/A
Source Travels Properly	MDB	Total Mass of Device 60.2 lb.	
Source Stores Properly	MDB	Rear Plate Serial No. N/A	
NCR No.: N/A		Date Inspected 20 Feb 97	

SHIELDING EFFICIENCY TEST
FINAL DEVICE ASSEMBLY

Source Model No.: 86520 Source Serial No.: 0295 Activity 177.0 ci.

Survey Instrument: AN/PDR27 Serial No.: SM392401 Date Cal. ~~6 Apr~~ 6 Jun 97 Due 6 April 97
MDB 20 Feb 97

OBSERVED INTENSITY mR/hr

	AT SURFACE	SURFACE CORRECTION FACTOR	AT ONE METER
TOP	60	1.07	<.5
RIGHT	85	1.26	.6
FRONT	110	1.26	.7
LEFT	80	1.26	.6
REAR	85	1.26	.6
BOTTOM	45	1.25	<.5

CAPACITY CORRECTION FACTOR
1.35

ADJUSTED INTENSITY mR/hr

-	SURFACE	AT ONE METER
TOP	87	<.7
RIGHT	145	.8
FRONT	187	.9
LEFT	136	.8
REAR	145	.8
BOTTOM	76	<.7

Inspector's Signature MDB Date 20 Feb 97 NCR NO. N/A

SENTINEL

SHIELDING PROFILE AND INSPECTION FORM

Model: 865 Serial Number: 52 Radionuclide: IR192 Max.Capacity: 240 Ci

Shield Data

Shield Heat#: _____ Mass of Shield: _____ Lbs. Lot #: _____

Initial Profile

Source Model: 86520 Source SN: _____ Activity: _____ Ci

Survey Inst.: _____ SN: _____ Date Cal.: _____ Date Due: _____

Surface	Observed Intensity mR/hr	Surface Correction Factor		Adjusted Intensity mR/hr
Top		1.07	N/A Capacity Correction Factor: _____	
Right		1.26		
Front		1.26		
Left		1.26		
Rear		1.26		
Bottom		1.25		

Inspector: _____ Date: _____ NCR #: _____

Final Profile

Source Model: 86520 Source SN: 0371 Activity: 231.7 Ci Mass of Device: _____ Lbs.

Survey Inst.: AN/PDR27T SN: SM392402 Date Cal.: 8Oct98 Date Due: 8Oct99

Surface	Observed Intensity mR/hr: At Surface	Surface Corr. Factor	At One Meter		Adjusted Intensity mR/hr: At Surface	At One Meter
Top	25	1.07	.3	Capacity Correction Factor: 1.03	28	.3
Right	75	1.26	.5		97	.5
Front	85	1.26	.5		110	.5
Left	65	1.26	.5		84	.5
Rear	60	1.26	.5		78	.5
Bottom	45	1.25	.5		58	.5

Inspector: MDBoyle Date: 8 March 99 NCR #: N/A

Q16-1/1

Comments: _____

Amersham QSA

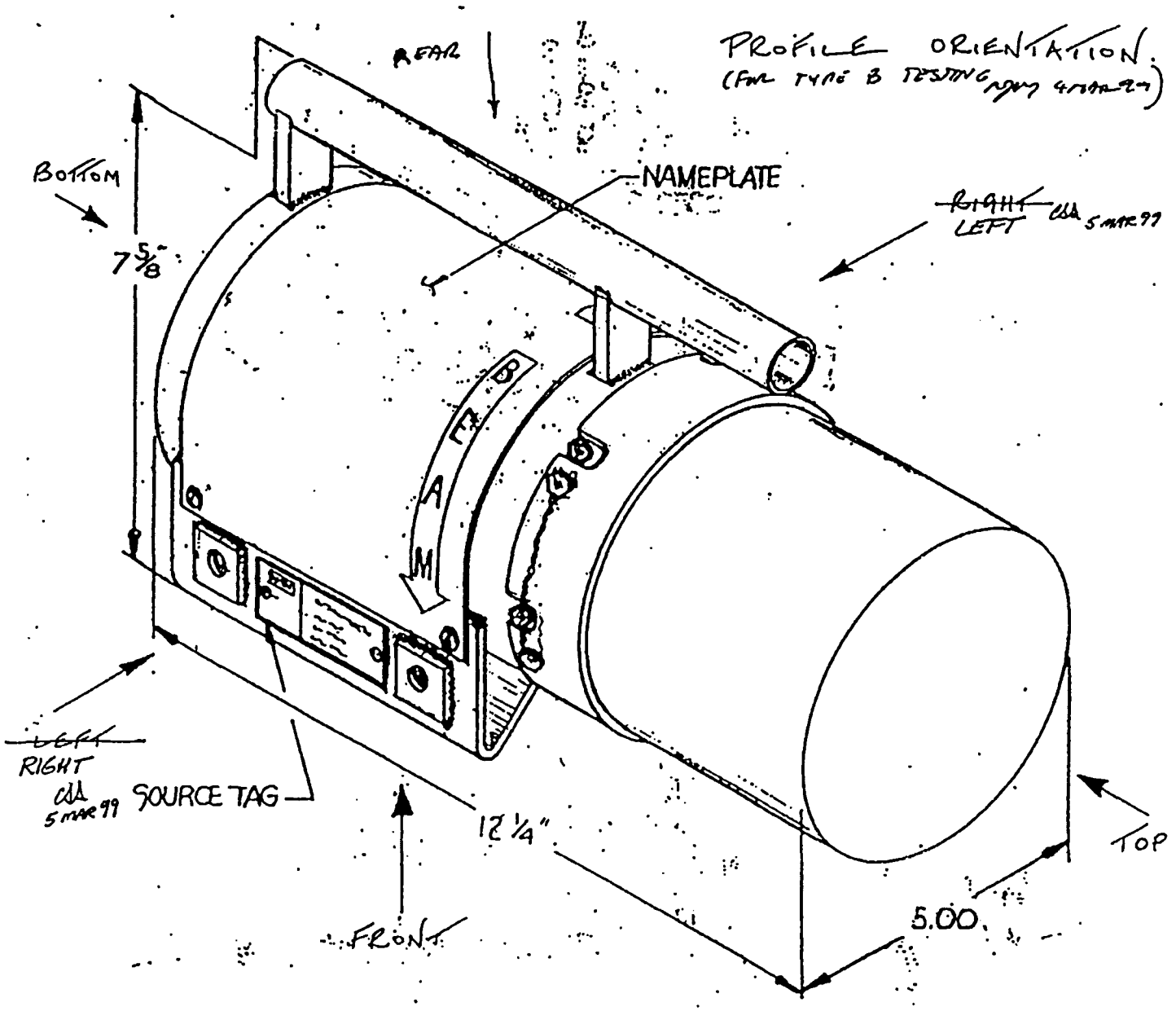
PROFILE ORIENTATION
(FOR TYPE B TESTING ONLY 4 MAR 99)
REAR
BOTTOM
NAMEPLATE
~~RIGHT~~ LEFT CDA 5 MAR 99
7 5/8"
B
A
M
~~LEFT~~ RIGHT CDA 5 MAR 99
SOURCE TAG
12 1/4"
TOP
FRONT
5.00

SENTINEL

Drop Test Unit

ROUTE CARD

QCL# ~~6204~~ MDB 20 Feb 97

SERIAL NUMBER 52

COMPLETE LOT: N/A
SPLIT LOT: N/A

TOTAL WO QTY: 1
RTE. CD. QTY: 1

LOT NO: N/A
SUB-LOT NO: N/A

CM:A

PART NUMBER	DESCRIPTION	DRAWING NUMBER	REVISION	WORK ORDER NUMBER
TEN 865	Type B Underwater Projector	D86500 / BOM at 17 Nov 98	EF/F	M076830

OPER SEQUENCE	DEPARTMENT	OPERATION DESCRIPTION	BY	DATE	STATUS	REFERENCE	COMMENTS
0010	Assy	Assemble	KMA	13 Jan 97	N/A	SOP-P022	
0020	Assy/QC	Underwater Leakage				SOP-P022	Notify QC
		& Functional Test	[illegible]	13 JAN 97	Acc		(Includes 100 PSI Pressure Test)
0030	Assy	Complete Assembly	KMA	14 Jan 97	N/A	SOP-P022	
0040	QC	Final Inspection	[illegible]	14 JAN 97	Acc	SOP-Q015	
0050	RL	Output Verification	NA	NA	N/A	N/A	not required for test RIEFEDGE units DWK 17 Feb 99
0060	QC	Final Profile	MDB	20 Feb 97	Acc	WI-Q08	QCL #6944
0070	QA	QA Review	[illegible]	17 Feb 99	N/A	SOP-Q025	
0080	IC	Stock Room	QC	19 Feb 99	N/A	SOP-M002	

CHECKLIST			CHECKLIST			CHECKLIST		
SOP-STEP	DESCRIPTION	INITIALS	SOP-STEP	DESCRIPTION	INITIALS	SOP-STEP	DESCRIPTION	INITIALS

ENGINEERING: G Parsons 06 MAR 96	REGULATORY: L Ridolfi 27 Mar 96	MATERIALS: [illegible] 27 MAR 96
PRODUCTION: RW Evans 27 Mar 96	QUALITY ASSURANCE: C Ferreira 19 Mar 96	ISSUE NUMBER: 3

9/94 R1

NO.	DESCRIPTION OF NONCONFORMANCE	DISPOSITION	INDIV/DATE	INSP/DATE	CONFIGURATION PART NUMBER	DESCRIPTION	CM	SERIAL/ LOT NO.	INITIALS	DATE
					86501	Projector Weldment	A	52	KMA	13 Jan 97
								52	KMA	14 Jan 97
					CHANGE VERIFICATION					
					PART NUMBER	DESCRIPTION	REV	ECO	INDIVIDUAL	VERIFIED
					86500	GRP	F	2271		

9/94 R1

QA Review: _____ Date: _____

SENTINEL

ROUTE CARD

Serial Number 52

QCL# ~~6108~~ MDB 12 OCT 96

COMPLETE LOT N/A
SPLIT LOT N/A

TOTAL WO QTY: 15
RTE. CD. QTY: 1

LOT NO: N/A
SUB-LOT NO: N/A

CH: A

PART NUMBER	DESCRIPTION	DRAWING NUMBER	REVISION	WORK ORDER NUMBER
86501	Projector Weldment	D 86501	G	M076840

OPER SEQUENCE	DEPARTMENT	OPERATION DESCRIPTION	BY	DATE	STATUS	REFERENCE	COMMENTS
0010	MS	Mach & Assy Item 3&4	WT	26 Sept 96	N/A	SOP - P024	Upper & Lower Shield Support Ring
0020	QC	Inspect Items 3&4	MDB	26 Sept 96	ACC	D 86501	Verify Tight Fit on Shield
0030	MS	Assemble	DRB	1 OCT 96	N/A	SOP-P024	
0040	QC	Inspect	MDB	1 Oct 96	ACC	SOP-P024	Verify Alignment of Scribe Mark
0050	MS	Weld	DRB	1 Oct 96	N/A	SOP-P024	Item 8 to 2 & Item 6 to 2
0060	QC	Inspect Weld	MDB	2 Oct 96	ACC	D 86501	Iten 8 to 2 & Item 6 to 2
0070	MS	Weld	DRB	2 OCT 96	N/A	D 86501	Item 7 to 2
0080	QC	Inspect Weld	MDB	3 Oct 96	ACC	D 86501	Item 7 to 2
0090	MS	Machine	WT	8 Oct 96	N/A	D 86501	Note 7 & 8
0100	QC	Inspect	MDB	12 Oct 96	~~Rejn~~ ACC 16 OCT 96	SOP-Q015	QCL# 6204

CHECKLIST

SOP-STEP	DESCRIPTION	INITIALS
N/A	Install Item 9 Bronze	DRB
	Bearing (Note 3)	
N/A	.030 + /- .005	LET

CHECKLIST

SOP-STEP	DESCRIPTION	INITIALS

CHECKLIST

SOP-STEP	DESCRIPTION	INITIALS

ENGINEERING: S Larson 22 AUG 96
REGULATORY: L Rodolak 22 Aug 96
MATERIALS: A Cain 22 Aug 96
PRODUCTION: RW Evans 22 Aug 96
QUALITY ASSURANCE: C. Ferrera 22 Aug 96
ISSUE NUMBER: 4

NO.	DESCRIPTION OF NONCONFORMANCE	DISPOSITION	INDIV/DATE	INSP/DATE	PART NUMBER	DESCRIPTION	CN	SERIAL/ LOT NO.	INITIALS	DATE
1	OPER. SEQ. # 0100				86502	Housing Weldment	A	96213-1	DRB	1-OCT. 96
	Dwg. .220 +.005 -.012				86501-3	D U Shield	A LOT. HT.	96177-1 35313-2	DRB	1-OCT 96
	Actual:									
	Lock Side - .202									
	Opposite - .227									
	-M1-									
	NCR # QC16204									
	VOID - WRITTEN IN ERROR									
	CF 15 OCT 96									

CHANGE VERIFICATION

PART NUMBER	DESCRIPTION	REV	ECO	INDIVIDUAL	VERIFIED

QA Review: C Ferrera Date: 16 OCT 96

9/94 R1

SENTINEL

ROUTE CARD

SERIAL NUMBER 52

QC LOT# N/A
CM: A

COMPLETE LOT N/A
SPLIT LOT N/A

TOTAL WO QTY: 15
RTE. CD. QTY: 1

LOT NO: N/A
SUB-LOT NO: N/A

PART NUMBER	DESCRIPTION	DRAWING NUMBER	REVISION	WORK ORDER NUMBER
86501	PROJECTOR WELDMENT	D 86501	G	M076840

OPER SEQUENCE	DEPARTMENT	OPERATION DESCRIPTION	BY	DATE	STATUS	REFERENCE	COMMENTS
0110	QA	QA Review	CF	16OCT96	N/A	SOP-Q025	
0120	IC	Stock Room	JH	18OCT96	N/A	SOP -M002	

CHECKLIST			CHECKLIST			CHECKLIST		
SOP-STEP	DESCRIPTION	INITIALS	SOP-STEP	DESCRIPTION	INITIALS	SOP-STEP	DESCRIPTION	INITIALS

ENGINEERING: S. Parsons 22 AUG 96
REGULATORY: L. Pidolski 22 Aug 96
MATERIALS: A. Cain 22 Aug 96
PRODUCTION: K W Evans 22 Aug 96
QUALITY ASSURANCE: C Ferrera 22 Aug 96
ISSUE NUMBER: 4

6176

AMERSHAM CORPORATION

OM-A

ROUTE CARD

SERIAL NUMBER: 50 THRU 64 (45-59)

✓ COMPLETE LOT ____ SPLIT LOT

TOTAL WO QTY: 15 RTE. CD. QTY: 15

LOT NO: N/A SUB-LOT NO: N/A

PART NUMBER	DESCRIPTION	DRAWING NUMBER	REV	WORK ORDER
86504	Source Rod & Capsule Holder Assy	A86504	BC	M076860

OPER SEQ	DEPT	OPERATION DESCRIPTION	BY	DATE	STATUS	REFERENCE	COMMENTS
0010	MS	First Piece	JOT	7-OCT-96	N/A	A86504	Deliver First Piece to QC
0020	QC	First Pc Inspection	DW	7 OCT 96	Acc	A86504	
0030	MS	Machine & Etch	LDI	7 OCT 96	N/A	A86504	
0040	QC	Final Inspection	DW	8 OCT 96	Acc	SOP-0015 & SOP-0013	
0050	QA	Review	KAA	8 OCT 96	N/A	SOP-0025	
0060	IC	Stock Room Processing	JH	9 OCT 96	N/A	SOP-N002	

CHECKLIST INITIALS	CHECKLIST DESCRIPTION	CHECKLIST SOP. STEP	CHECKLIST INITIALS	CHECKLIST DESCRIPTION	CHECKLIST SOP. STEP	CHECKLIST INITIALS	CHECKLIST DESCRIPTION	CHECKLIST SOP. STEP
LDI	Note 3 – Drill & Tap – Chase Threads	–						

ENGINEERING: [illegible] 3-18-94 REGULATORY: [illegible] 22 MAR 94 MATERIALS: [illegible] 18 MAR 94

PRODUCTION: [illegible] 3/18/94 QUALITY ASSURANCE: [illegible] 22 MAR 94 ISSUE NUMBER: 2

REVISION 1

NONCONFORMANCES					CONFIGURATION					
NO.	DESCRIPTION	DISPOSITION	INDIV/DATE	INSP/DATE	PART NUMBER	DESCRIPTION	CH.	SERIAL/LOT NO.	INITIALS	DATE
* 1	6MM X .75 MM THD.	REWORK BY	*	DW 23 SEP 96	86504-1	Source Rod	A	96095-3	DW	28 Aug 96
	UNABLE TO THREAD CAP	CHASING THREADS			86504-2	Source Cap Holder	A	960274	MT	7 Oct 96
	HOLDER ON ROD M3	Georgia 28 Aug 96			876504-3	Modified Roll Pin	A	96268-6	DFW	8 OCT 96
	(PLATING THICKNESS)	MZS 28 Aug 96								
* 2	7MM X 1.0 MM THD.	REWORK BY	*	DW 23 SEP 96						
	WILL NOT ACCEPT GAGE	CHASING THREADS								
	DW 28 AUG 96 M3	Georgia 28 Aug 96								
		28 AUG 96								
		MZS 28 Aug 96								
*	Release 15 PCS to	REC for REWORK		DW 27 SEP 96						
		PPO #00208								
		CF 28 Aug 96								

CHANGE VERIFICATION

PART NUMBER	DESCRIPTION	REV	ECO	INDIVIDUAL	VERIFIED
86504-1	Source Rod	D	19816	AC	DW
86504	Source Rod Assy	C	2173	AC	DW

QA REVIEWED BY: K Nifty DATE: 8 OCT 96

REVISION 1

APPENDIX C

TEST CHECKLISTS AND DATA SHEETS

Checklist 1: *Specimen Preparation and Inspection*

Step	TP84(A) SN 51	TP84(B) SN 52	
1. Total package weight (lb.).	59.8 lb	60.2 lb	
2. Are all fabrication and inspection records documented in accordance with the AEAT Q.A. Programme?	~~yes~~ * DW 25 FEB 99	~~yes~~ * DW 25 FEB 99	
3. Does the test unit comply with the requirements of Drawing R86590 Rev. A.	yes DW 26 Feb 99	yes DW 26 Feb 99	
4. Has the radiation profile been recorded in accordance with AEAT/QSA Work Instruments WI-Q09?	yes DW 25 FEB 99	yes DW 25 FEB 99	
5. Is the package prepared for transport?	yes DW	yes DW	
Steps 1 through 5 witnessed and verified by:	Print Name	Signature	Date
Engineering:	Nicholas J. Marone	[signature]	16 MAR 99
Regulatory Affairs:	Marc S. Nasson	[signature]	16 MAR 99
Q.A.:	Daniel W. Kurtz	Daniel W. Kurtz	16 mar 99

DOCUMENTATION VERIFIED ON 16 MAR 99

* Proceed with compression testing pending following documentation:

1) Route cards on projector weldment

2) P.O.'s assigned to above route cards.

These documents to be assessed with compression test assessment

1 mar 99 CMR
1 mar 99 DWK
6 MAR 99 [signature]

Equipment List 1: *Compression Test Equipment*

Description	Enter the Model and Serial Number	Attach Inspection Report or Calibration Certificate
Compression Test Loading Plate.	NA	NA
Test Weights.	NA	NA
Test Surface.	NA	NA 26 FEB 99
Record any additional tools used to facilitate the test and attach the appropriate inspection report or calibration certificate		
Scale - Weight	ASSY-11	due 16 MAR 99
Scale - Weight	4010 120131	due 16 MAR 99
Combination Square	FD 147	9 APR 99
Thermometer	FUG-17	due 08 OCT 99
	Print Name	Date
Completed by:	DAVE ANNIS	01 MAR 99
Verified by:	MICHAEL L TREMBLAY	9 MAR 99

Checklist 2: *Compression Test*

Test Location: Burlington, MA

Step	Specimen TP84(A)	Specimen TP84(B)
1. Position the specimens as shown in the referenced figure.	Figure 8.5.2.1 DW	DW
2. Record the ambient temperature:	21°C	
3. Record applied load.	6.49 lbs	
4. Note the instrument used for the temperature measurement:	See equipment list	
5. Measure and record each specimens overall dimensions pre-test.	1: 8 3/16. 2: 8 1/4	3: 8 1/4 4: 8 1/8
6. Place the weights onto the loading platform and leave for 24 hours.	DW 01MAR99 1500	DW 01MAR99 1500
7. Measure and record each specimens overall dimensions post-test. 1530 on 02MAR99	1: 8 1/4 2: 8 1/4	3: 8 3/16 4: 8 1/8 DW 2 MAR99
8. Record damage to the test specimen on a separate sheet and attach.	02MAR99 NONE	02MAR99 NONE
Test Witnessed by: Signature:	Print Name	Date
Engineering:	MICHAEL L. TREMBLAY	02 MAR 99
Regulatory Affairs: C. Roughan	Cathleen Roughan	2 Mar 99
Quality Assurance:	Nicholas J. Manning	2 MAR 99

02MAR99

No damage from compression test, proceed with testing as planned. CMR 2 Mar 99

02 MAR 99

MODEL 865

UNIT WT = 59 lb NOMINAL.

10% SAFETY MARGIN = 1.1 x 59

= 64.9 lb

TEST WT = 10 x 64.9 lb

= 649 lb

PLATE = 39.4 lb

DRUM = 429 lb

LEAD INGOTS = 91 lb + 89.2

= 180.2

TOTAL = 648.6 lb.

01 MAR 99

DK 01 MAR 99

Equipment List 2: *Penetration Test Equipment*

Description	Enter the Model and Serial Number	Attach Inspection Report or Calibration Certificate
Penetration Bar.	T10129 REVB	DW SEE ATTACH CERT
Drop Surface.	T10122 REVB	
Record any additional tools used to facilitate the test and attach the appropriate inspection report or calibration certificate		
OMEGA THERMOMETER HH 21 ENG-12	MODEL HH-21 ENG-12	
THERMOCOUPLE	5TC-GG-K-20-36	
Signature	Print Name	Date
Completed by: Dave Annis	DAVE ANNIS	17 MAR 99
Checked by: Daniel W. Kurtz	Daniel W. Kurtz	17 MAR 99

Checklist 3: *Penetration Test*

Test Location: Groveland MA

Step	Specimen TP84(~~B~~) A S/N 51 (DW 17 MAR 99)	Specimen TP84(B) S/N 52
1. Position the specimen as shown in the referenced figure.	Figure 8.6.2.1 (DW)	Figure 8.6.3.1 (DW)
2. Inspect the orientation set-up and verify the bar height.	(DW)	(DW)
3. Record the ambient temperature:	11° C	15° C
4. Note the instrument used for the temperature measurement:	ENG-12	ENG-12
5. Start the video recorder.	(DW)	(DW)
6. Release the penetration bar. Check to ensure that the penetration bar hit the specified area.	(DW)	(DW)
7. Record damage to the test specimen on a separate sheet and attach.	(DW)	(DW)
8. Engineering, Regulatory Affairs and Quality Assurance ~~make~~ preliminary assessment ~~relative~~ to 10 CFR 71. Record the assessment on a separate sheet and attach. Determine what changes, if any, are necessary in package orientation for the 1.2m (4 foot) drop test to achieve maximum damage.		

Test witnessed by: Signature:	Print Name	Date
Engineering: Nicholas J. Marrone	Nicholas Marrone	17 MAR 99
Regulatory Affairs: [illegible]	Marc S. Nadeau	17 MAR 99
Quality Assurance: D.W. Kurtz	Daniel W. Kurtz	17 MAR 99

Test Plan 84 Data Sheet

Test Unit Model/Serial No.: 865 SN 51		Specimen/Test: TP84 (A) / PENETRATION TEST
Test Date: 17 MAR 99	Test Time: 11:30 AM	Test Plan Step No.: 8.6.2

Describe drop orientation and drop height:

Penetration BAR DROP FROM 4ft ON TO COVER BOLT – CENT ORIENTATION PER Figure 8.6.2.1

Describe impact (location, rotation, etc.):

• PENETRATION BAR WAS DROPPED TWICE. – 1st DROP MISSED COVER BOLT 2nd DROP WAS MADE WITH GUIDE TUBE. BOTTOM OF GUIDE TUBE ~7" ABOVE IMPACT POINT. BAR WAS ~55" ABOVE IMPACT POINT – BAR HIT DIRECTLY ON COVER BOLT.

Describe on-site inspection (damage, broken parts, etc.):

2nd DROP WITNESS MARK ON BOLT HEAD. – NO OTHER DAMAGE

1st DROP – WITNESS MARK ON LEG AT IMPACT POINT – NO OTHER DAMAGE

On-site assessment:

CONTINUE WITH PLANNED TEST SEQUENCE AND ORIENTATIONS

Engineering: [signature] 17 MAR 99 Regulatory: [signature] 17 MAR 99 QA: D. W. Kurtz 17 MAR 99

Describe any post-test disassembly and inspection:

NA

Describe any change in source position:

NA

Describe results of radiography:

NA

Completed by: [signature] Date: 17 MAR 99

Test Plan 84 Data Sheet

Test Unit Model/Serial No.: 865 SN 52		Specimen/Test: TP84(B)/PENETRATION TEST
Test Date: 17 MAR 99	Test Time: 11:42 AM	Test Plan Step No.: 8.6.3

Describe drop orientation and drop height:

- PENETRATION BAR DROP ON BEAM PORT FROM "4 ft"
- NOTE: GUIDE TUBE USED TO ENSURE IMPACT ON BEAM PORT - BOTTOM OF TUBE 6" ABOVE IMPACT POINT - BAR 54" ABOVE IMPACT POINT

Describe impact (location, rotation, etc.):

IMPACT DIRECTLY ON BEAM PORT PER Fig 8.6.3.2

Describe on-site inspection (damage, broken parts, etc.):

INDENTATION OF BEAM PORT AT IMPACT POINT - NO OTHER DAMAGE

On-site assessment:

CONTINUE WITH PLANNED TEST SEQUENCE AND ORIENTATIONS.

Engineering: [signature] 17MAR99 Regulatory: [signature] 17MAR99 QA: D.N. Kurtz 17MAR99

Describe any post-test disassembly and inspection:

NA

Describe any change in source position:

NA

Describe results of radiography:

NA

Completed by: [signature] Date: 17 MAR 99

Equipment List 3: *1.2m (4 foot) Drop Equipment List*

Description	Enter the Model and Serial Number	Attach Inspection Report or Calibration Certificate
Drop Surface. T10122 REV B		SEE ATTACH
Record any additional tools used to facilitate the test and attach the appropriate inspection report or calibration certificate		
OMEGA THERMOMETER HH21 ENG-12	ENG-12	SEE ATTACH CERT
OMEGA THERMOCOUPLE	STC-GG-K-20-36	↓
Signature	Print Name	Date
Completed by: Dave Annis	DAVE ANNIS	17 MAR 99
Verified by: Daniel W. Kurtz	Daniel W. Kurtz	17 MAR 99

Checklist 4: *1.2m (4 foot) Free Drop*

Test Location Greenland MA

Step	Specimen TP84(A) SN 51	Specimen TP84(B) SN 52
1. Measure and record the ambient temperature (°C).	13° C	13° C
2. Note the instrument used:	ENG-12	ENG-12
3. Attach the test specimen to the release mechanism.	DW	DW
4. Lift and orientate the test specimen as shown in the referenced figure for the specimen.	Figure 8.7.2.1 DW	Figure 8.7.3.1 DW
5. Inspect the orientation set-up and verify the drop height.	DW	DW
6. Photograph the set-up in at least two perpendicular planes.	DW	DW
7. Begin video recording of the test so that impact is recorded.	DW	DW
8. Release the test specimen.	DW	DW
9. Record the damage to the test specimen on a separate sheet and attach.	DW	DW
10. Engineering, Regulatory Affairs and Quality Assurance make preliminary assessment relative to 10 CFR 71. Record the assessment on a separate sheet and attach. Determine what changes, if any, are necessary in package orientation for the 9m (30 foot) free drop test to achieve maximum damage.		

Test witnessed by: Signature	Print Name	Date
Engineering: Nicholas J. Marrone	Nicholas J. Marrone	17 MAR 99
Regulatory Affairs: [illegible]	MARC S. NADLER	17 MAR 99
Quality Assurance: D.W. Kurtz	D.W. Kurtz	17 MAR 99

Test Plan 84 Data Sheet

Test Unit Model/Serial No.: 865 SN51		Specimen/Test: TP84(A)/1.2M DROP
Test Date: 17 MAR 99	Test Time: 1240	Test Plan Step No.: 8.7.2

Describe drop orientation and drop height:

DROP FLAT ON TOP FROM 48 INCH PER FIGURE 8.7.2.1

Describe impact (location, rotation, etc.):

Impact flat on top - UNIT THEN FELL ON SIDE

Describe on-site inspection (damage, broken parts, etc.):

- WITNESS MARK ON TOP - NO YIELDING OR BUCKLING OF COVER
- NO DAMAGE

On-site assessment:

CONTINUE WITH PLANNED TEST SEQUENCE AND ORIENTATIONS

Engineering: [signature] 17 Mar 99 Regulatory: [signature] 17 Mar 99 QA: D.W. Kurtz 17 MAR 99

Describe any post-test disassembly and inspection:

NA

Describe any change in source position:

NA

Describe results of radiography:

NA

Completed by: [signature]	Date: 17 MAR 99

Test Plan 84 Data Sheet

Test Unit Model/Serial No.: 865 SN 52		Specimen/Test: TP84(B)/1.2 M DROP
Test Date: 17 MAR 99	Test Time: 12:55	Test Plan Step No.: 8.7.3

Describe drop orientation and drop height:
HORIZONTAL - FLAT ON LOCK SIDE FROM 4 ft

Describe impact (location, rotation, etc.):
IMPACT PER FIGURE 8.7.3.1

Describe on-site inspection (damage, broken parts, etc.):
SLIGHT FLATTENING OF COVER AT POINT OF IMPACT (i.e. AT LOCK) - NO OTHER DAMAGE

On-site assessment:
CONTINUE WITH PLANNED TEST SEQUENCE AND ORIENTATIONS

Engineering: 17MAR99 Regulatory: 17MAR99 QA: D.N. Kurtz 17MAR99

Describe any post-test disassembly and inspection:
NA

Describe any change in source position:
NA

Describe results of radiography:
NA

Completed by:	Date: 17 MAR 99

Equipment List 4: *9m (30 foot) Drop Equipment List*

Description	Enter the Model and Serial Number	Attach Inspection Report or Calibration Certificate
Thermometer OMEGA HH 21 ENG-12	ENG-12	SEE ATTACH
Record any additional tools used to facilitate the test and attach the appropriate inspection report or calibration certificate		
THERMOCOUPLE OMEGA	STC-GG-K-20-36	SEE ATTACH CERT
Signature	Print Name	Date
Completed by: Dave Annis	DAVE ANNIS	17 MAR 99
Verified by: Daniel W. Kurtz	Daniel W. Kurtz	17 MAR 99

Equipment List 4: *9m (30 foot) Drop Equipment List*

Description	Enter the Model and Serial Number	Attach Inspection Report or Calibration Certificate
Thermometer OMEGA HH 21 ENG-12	ENG-12	SEE ATTACH
Record any additional tools used to facilitate the test and attach the appropriate inspection report or calibration certificate		
THERMOCOUPLE OMEGA	STC-GG-K-20-36	SEE ATTACH CERT
Signature	Print Name	Date
Completed by:	DAVE ANNIS	17 MAR 99
Verified by: Daniel W. Kurtz	Daniel W. Kurtz	17 MAR 99

Checklist 5: *9m (30 foot) Drop*

Test Location: Groveland MA

Step	Specimen TP84(A) SN 51	Specimen TP84(B) SN 52
1. Measure and record the ambient temperature (°C) Note the instrument used:	① 13°c / ② 13°c ENG-12 / ENG-12	13°c ENG-12
2. Attach the test specimen to the release mechanism.		
3. Lift and orientate the test specimen as shown in the referenced figure for the specimen.	Figure 8.9.2.1 ① DW / ② DW	Figure 8.9.3.1 DW
4. Inspect the orientation set-up and verify the drop height.	① DW / ② DW	DW
5. Photograph the set-up in at least two perpendicular planes.	① DW / ② DW	DW
6. Begin video recording of the test so that impact is recorded	① DW / ② DW	DW
7. Release the test specimen	① DW / ② DW	DW
8. Pause the video recorder. Ensure that the point of impact and the orientation specified in the plan have been achieved and recorded.	① DW "A" / ② DW "A"	DW
9. Record the damage to the test specimen on a separate sheet and attach.	① DW "A" / ② DW "A"	DW
10. Engineering, Regulatory Affairs and Quality Assurance make a preliminary assessment relative to 10CFR 71. Record the assessment on a separate sheet and attach. Determine what changes, if any, are necessary in package orientation for the puncture test to achieve maximum damage.	① DW / ② DW	/ DW

Test witnessed by (Signature)	Print Name	Date
Engineering: Nicholas J. Marrone	N. J. MARRONE	17 MAR 99
Regulatory Affairs: [illegible]	MARC J. NADEAU	17 MAR 99
Quality Assurance: D. W. Kurtz	D.W. Kurtz	17 MAR 99

Test Plan 84 Data Sheet

Test Unit Model/Serial No.: 865 SN 51		Specimen/Test: TP84 (A)/ 9M DROP
Test Date: 17 MAR	Test Time: 12:20	Test Plan Step No.: 8, 9, 2

Describe drop orientation and drop height:

- DROP FLAT ON TOP FROM 30 ft per Fig 8.9.2/

Describe impact (location, rotation, etc.):

DROP #1 { - UNIT ROTATED SLIGHTLY DURING DROP. IMPACT WITNESS MARK SHOWED IMPACT PREDOMINANTLY ON A 180° SEGMENT OF TOP.

DROP #2 - UNIT HIT IN SAME ORIENTATION AS 1ST DROP - NOTE THAT IMPACT WAS ON SIDE ~~OPPOSITE~~ 17 MAR99 OF ~~COVER~~ NM 17 MAR99 TOP ABOVE LOCK (SAME IMPACT POINT AS DROP #1)

Describe on-site inspection (damage, broken parts, etc.):

- DROP #1 - WITNESS MARK ON TOP, ~180° LONG - SOME DEFORMATION/BUCKLING OF COVER IN VICINITY OF IMPACT POINT - SOME VERY SMALL DISTORTION OF 2 COVER BOLTS ~~AGAINST ANTI-DROP~~ 17 MAR99 ON SIDE WITH COVER DAMAGE
- DROP #2 - ADDITIONAL BUCKLING OF COVER - NO ADDITIONAL DAMAGE TO BOLTS

On-site assessment:

DROP #1 - TO ENSURE 30 ft DROP BOUNDS ~~POTENTIAL~~ NM 17 MAR99 DAMAGE WHICH COULD OCCUR FROM A 30 ft DROP FLAT ON TOP, DROP THE UNIT IN THE SAME ORIENTATION FROM 30 ft A SECOND TIME

DROP #2 - COMBINATION OF 2 DROPS BOUNDS AFFECTS OF PLANNED DROP - CONTINUE WITH PLANNED TEST SEQUENCE AND ORIENTATION

Engineering: NJ Marzo 17 MAR99 Regulatory: [signature] 17 MAR99 QA: D.W. Kurtz 17 MAR99

Describe any post-test disassembly and inspection:

NA

Describe any change in source position:

NA

Describe results of radiography:

NA

Completed by: NJ Marzo	Date: 17 MAR 99

Test Plan 84 Data Sheet

Test Unit Model/Serial No.: 865 SN 52		Specimen/Test: TP84 (B) / 9M DROP
Test Date: 17 MAR 99	Test Time: 1:04	Test Plan Step No.: 8.9.3

Describe drop orientation and drop height:

DROP FLAT ON LOCK SIDE FROM 30 ft

Describe impact (location, rotation, etc.):

IMPACT PER FIGURE 8.9.3.1

Describe on-site inspection (damage, broken parts, etc.):

- SLIGHT DEFORMATION (i.e. FLATTENING) OF UNIT ALONG LINE OF IMPACT
- NO OTHER DAMAGE

On-site assessment:

CONTINUE WITH PLANNED TEST SEQUENCE AND ORIENTATION

Engineering: [signature] 17 MAR 99 Regulatory: [signature] 17 MAR QA: D.W. Kurtz 17 MAR 99

Describe any post-test disassembly and inspection:

NA

Describe any change in source position:

NA

Describe results of radiography:

NA

Completed by: [signature]	Date: 17 MAR 99

Equipment List 5: *Puncture Test Equipment*

Description	Enter the Model and Serial Number	Attach Inspection Report or Calibration Certificate
Puncture Billet.	T10119	SEE ATTACH
Thermometer	OMEGA HH-21 ENG-12	↓
Record any additional tools used to facilitate the test and attach the appropriate inspection report or calibration certificate		
THERMOCOUPLE'S OMEGA	STC-GG-K-20-36	SEE ATTACH (1)(2)
Signature	Print Name DAVE ANNIS	Date
Completed by: Dave Annis	DAVE ANNIS	17 MAR 99
Verified by: Daniel W. Kurtz	Daniel W. Kurtz	17 MAR 99

Checklist 6: *Puncture Test*

Test Location: Cranland, MA

Specimen Puncture TEST
2 X FIGURE 8.10.3.1 (2X = 2nd TEST

Step	Specimen TP84(A)	Specimen TP84(B)	
1. Measure and record the ambient temperature (°C).	13°c	X 2 DW 13°c	12°c
2. Note the instrument used:	ENG-12	X 2 DW ENG-12	ENG-12
3. Attach the test specimen to the release mechanism	DW	DW 2 X DW	DW
4. Lift and orientate the test specimen as shown in the referenced figure for the specimen.	Figure 8.10.2.1 DW	Figure 8.10.3.1 DW 2 X	Figure 8.10.4.1 DW
5. Inspect the orientation set-up and verify the drop height.	DW	DW 2X	DW
6. Photograph the set-up in at least two perpendicular planes.	DW	DW 2X	DW
7. Begin video recording of test so that the impact is recorded.	DW	DW 2X	DW
8. Release the test specimen.	DW	DW 2X	DW
9. Pause the video recorder. Ensure that the point of impact and orientation specified in the plan have been achieved and recorded.	DW	DW 2 X	DW
10. Record damage to test specimen on a separate sheet and attach.	DW	DW 2X	DW
11. Device Profile Complete.	DW	DW 2X	DW
12. Engineering, Regulatory Affairs and Quality Assurance make a preliminary assessment relative to 10CFR 71. Record the assessment on a separate sheet and attach.	DW	DW 2X	DW
Test witnessed by: Signature	Print Name	Date	
Engineering: * Nicholas J. Marra	N. MARRANÉ	17 MAR 99	
Regulatory Affairs: * [signature]	KARL S. MADDAU	17 MAR 99	
Quality Assurance: * Daniel W. Kurtz	DANIEL W. KURTZ	17 MAR 99	

NM 22MAR99
DWK 22MAR99
N 22MAR99

* ALL STEPS EXCEPT STEP 11 COMPLETED ON 17MAR99 NJM

Test Plan 84 Data Sheet

Test Unit Model/Serial No.: 865 SN 51		Specimen/Test: TP84 (A) / PUNCTURE
Test Date: 17 MAR 99	Test Time: 1:47	Test Plan Step No.: 8.10.2

Describe drop orientation and drop height:

DROP ON PUNCTURE BAR FROM 4'. TARGET COVER BOLT.

Describe impact (location, rotation, etc.):

HIT TOP OF ONE BOLT AND THEN IMPACTED SHELL AND LEG.

Describe on-site inspection (damage, broken parts, etc.):

WITNESS MARK ON BOLT HEAD AND SHELL. DEFORMATION OF TOP EDGE OF LEG.

On-site assessment:

DEVICE IS INTACT. NO BROKEN OR MISSING PARTS.

Engineering: N J Marrone 17 MAR 99 Regulatory: [signature] 17 MAR 99 QA: D.N. Kurtz 17 MAR 99

Describe any post-test disassembly and inspection:

- Cover plate bolts removed normally - Threads in good shape - No indication of bolts being loaded in shear
- Inner cover plate bolts also removed normally - No indication of shear load on bolts
- Inner and outer cover removed together - Inner cover stuck within outer cover.
- Witness marks on inside of inner cover where cover hit ~~over~~ of bolts on top of actuator assembly - ~~BE~~ ACTUATOR ASSEMBLY HOLD DOWN BOLTS, ~~to right of unit~~ ~~(Left)~~ on lock side of unit BEN ~~connectors bent.~~ NJM 17 MAR 99. NJM 17 MAR 99
- Witness Marks on inside surface of outer cover at center - Matching witness mark on top of actuator piston
- ACTUATOR Operated when air applied (i.e. piston stroked as designed).
- ACTUATOR ASSEMBLY WAS REMOVED -
- SOURCE ROD ASSEMBLY FOUND TO BROKEN AT INTERFACE WITH ACTUATOR ASSEMBLY. FAILURE APPEARED TO BE A BRITTLE FAILURE. - SOURCE ROD WAS SECURED IN THE LOCKED POSITION. *
- LOCK ASSEMBLY NOT DAMAGED AND OPERATED AS DESIGNED AFTER THE DROPS.
- Witness mark in shoulder of source rod assembly at lock interface

Describe any change in source position:

- SOURCE ROD ASSEMBLY SECURED IN THE LOCKED POSITION

Describe results of radiography: NA

- DEVICE RADIOGRAPHY NOT REQUIRED.

- DEVICE TO BE REASSEMBLE W/ LIVE SOURCE & PROFILED

Completed by: N J Marrone Date: 17 MAR 99

Test Plan 84 Data Sheet

DROP 1

Test Unit Model/Serial No.: 865 SN 52		Specimen/Test: TP84 (B) / PUNCTURE
Test Date: 17 MAR 99	Test Time: 2:15	Test Plan Step No.: 8.10.3

Describe drop orientation and drop height:

DROP ON PUNCTURE BAR FROM 4 ft - TARGET BEAM PORT
PER FIGURE 8.10.3.1

Describe impact (location, rotation, etc.):

-DROP A - IMPACT AT BEAM PORT BUT DEVICE ROTATED (SEE FIGURE) SUCH THAT PUNCTURE BAR DID NOT REACH BEAM PORT

-DROP B - IMPACT AT BEAM PORT WITH ~~EDGE~~ MAIN EDGE OF BAR ⊥ to Axis of device

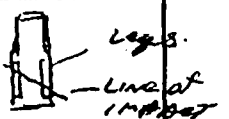

Describe on-site inspection (damage, broken parts, etc.):

-DROP A - WITNESS MARK ON LEGS - DEVICE FELL OVER AFTER IMPACT DEFORMING HANDLE - NO OTHER DAMAGE

-DROP B - WITNESS MARK ON BOTTOM of legs and on beam port - NO BEAM PORT DID NOT DEFORM FROM PUNCTURE BAR IMPACT - NO DAMAGE FROM PUNCTURE BAR

On-site assessment:

-DROP A - IMPACT WAS NOT IN DESIRED ORIENTATION - REPEAT DROP

- DROP B - DEVICE IMPACT WITH NO BROKEN PARTS - CONTINUE WITH PLANNED TEST SEQUENCE AND ORIENTATION

Engineering: [signature] 17MAR99 Regulatory: [signature] 17MAR99 QA: D.W. Kurtz 17MAR99

Describe any post-test disassembly and inspection:

NA

Describe any change in source position:

NA

Describe results of radiography:

NA

Completed by: [signature] Date: 17 MAR 99

Test Plan 84 Data Sheet

Test Unit Model/Serial No.: 845 SN 52		Specimen/Test: TP 84 (B) PUNCTURE - DROP 2
Test Date: 17 MAR 99	Test Time: 2:35	Test Plan Step No.: 8.10.4

Describe drop orientation and drop height:
DROP ON PUNCTURE BAR - FLAT ON LOCK - FROM 4ft (PER Fig 8.10.4.1)

Describe impact (location, rotation, etc.):
Impact on lock (per Figure 8.10.4.1)

Describe on-site inspection (damage, broken parts, etc.):
NO ADDITIONAL DAMAGE TO DEVICE FROM PUNCTURE BAR DROP

On-site assessment:
DEVICE IS INTACT - NO BROKEN OR MISSING PARTS

Engineering: N J Marsh 17 MAR 99 Regulatory: [signature] 17 MAR 99 QA: D.W. Kurtz 17 MAR 99

Describe any post-test disassembly and inspection:
- ~~Cover~~ Inside Cover Bolts removed normally - No indication on threads of shear loads
- Outer Cover Bolts Removed normally - Indication of shear loading bolts on either side of lock - Cover bolts holes also distorted at these locations.
- ~~Inner~~ Outer Cover Removed normally; Inner cover removed normally N J M 17 MAR 99
- Air applied to actuator - Piston starts to move then stops (indicating Piston connected to some rod which is locked in position) - Operates properly when unlocked.
- Lock Assembly intact & Functional
- ACTUATOR ASSEMBLY SLIGHTLY CANTILEVERED TOWARDS LOCK SIDE - DISTORTION OF TOP PLATE & BOLTS ON SIDE OPPOSITE LOCK (these bolts put into TENSION
- ACTUATOR REMOVED - SOURCE ROD SECURED IN SHIELDED POSITION - LOCK ASSEMBLY NOT DAMAGED
- WITNESS MARK ON SHOULDER OF TOP WHERE ACTUATOR ATTACHES, ON LOCK SIDE

Describe any change in source position:
- SOURCE ROD ASSEMBLY SECURED IN THE LOCKED POSITION

Describe results of radiography:
- DEVICE RADIOGRAPHY NOT REQUIRED - NA

DEVICE TO BE RE-ASSEMBLED WITH LIVE SOURCE AND PROFILED

Completed by: [signature] Date: 17 MAR 99

APPENDIX D

TEST PHOTOGRAPHS

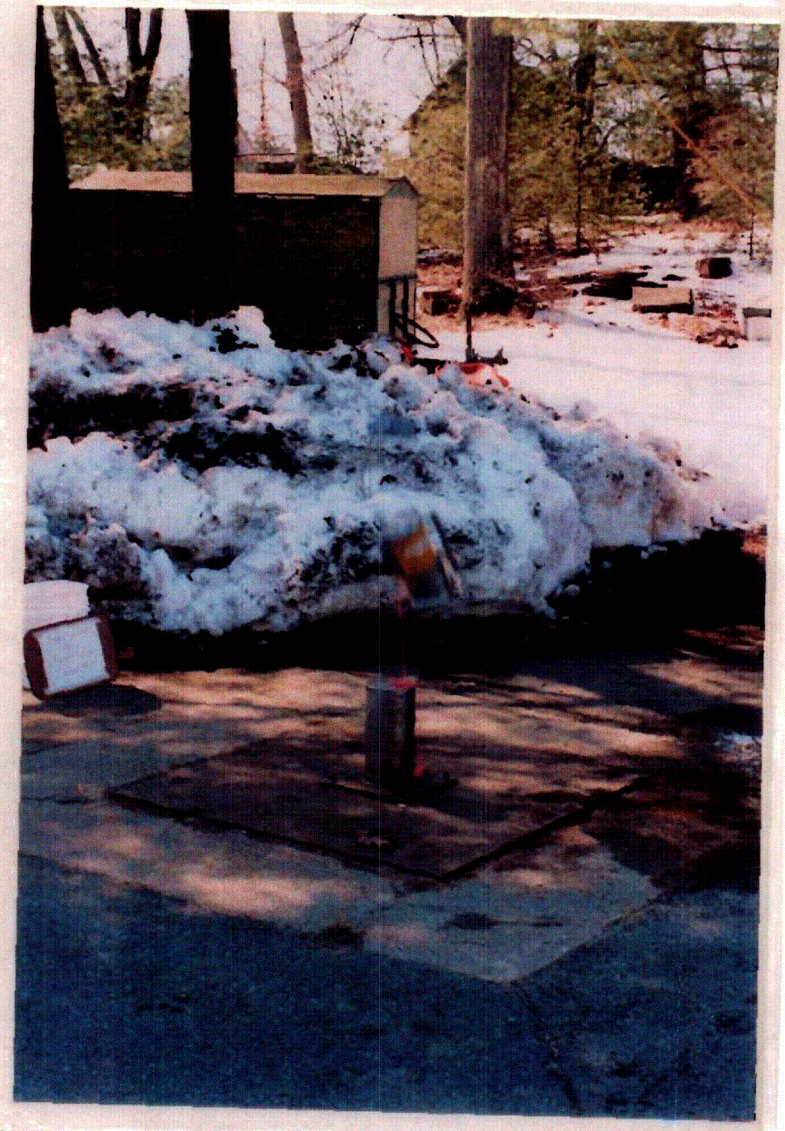

T P&A
FRONT

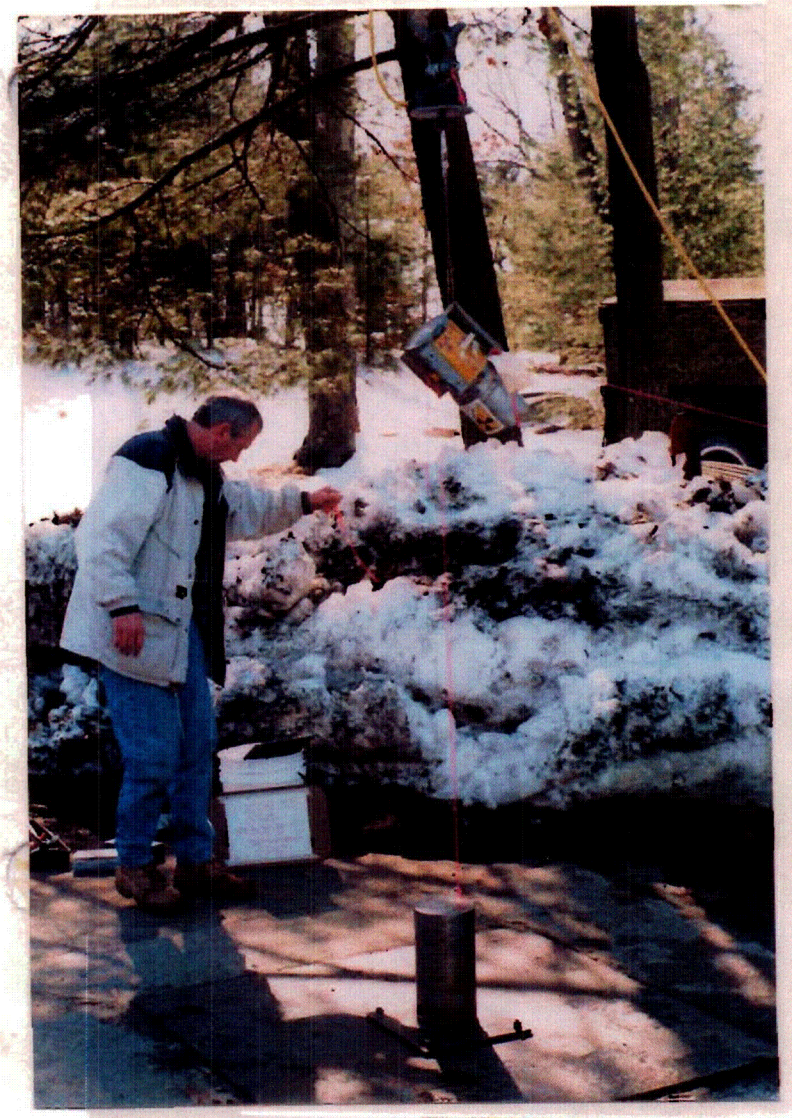

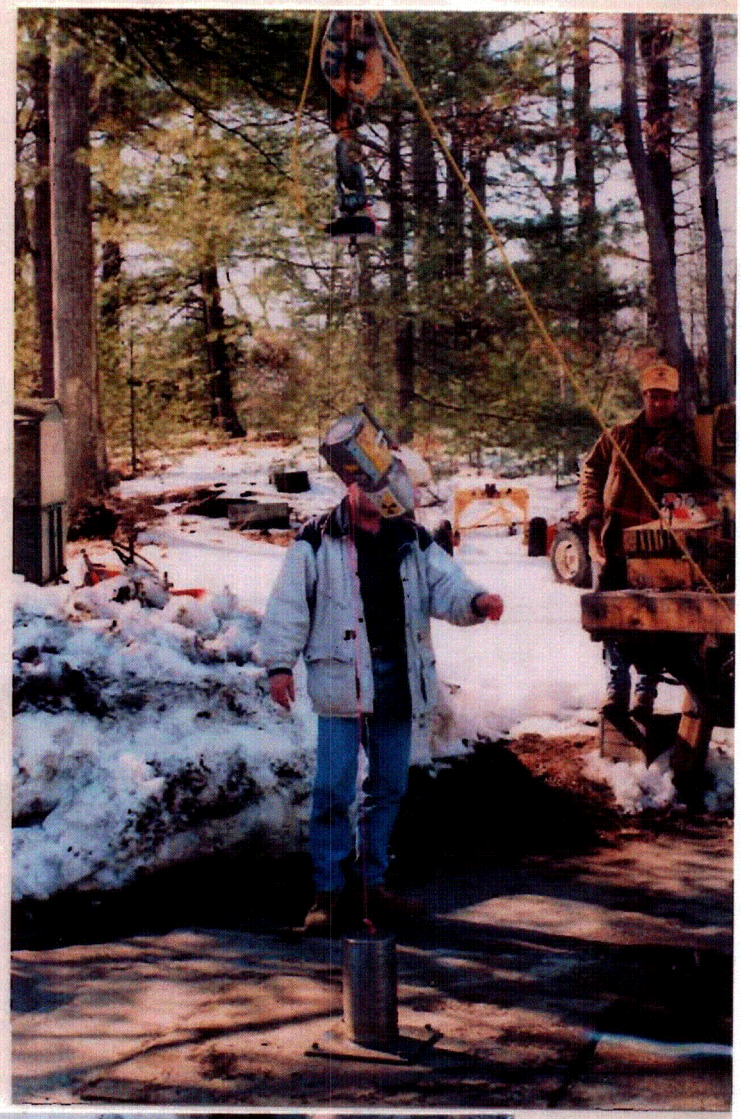

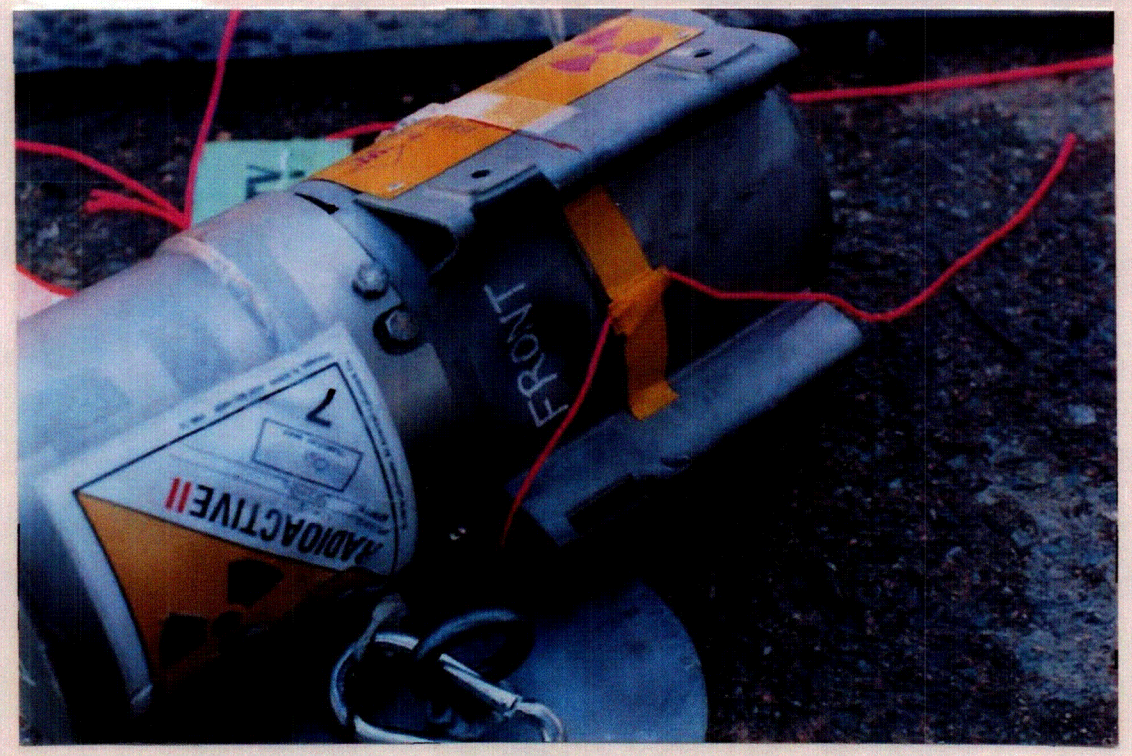
FRONT
RADIOACTIVE II
7

Section 2.12.3 Appendix: Model 865 Finite Element Analysis (June 2000).

MPR

MPR Associates, Inc.
320 King Street
Alexandria, VA 22314

CALCULATION TITLE PAGE

Client AEA Technology QSA, Inc.	Page 1 of 46 (Attachments 1, 2)
Project Type B Projector Qualification	Task No. 420-0001-004-0
Title Model 865 Finite Element Analysis	Calculation No. 420-004-AAB-1

Preparer / Date	Checker / Date	Reviewer & Approver/Date	Rev. No.
Anindya Boral 7-28-00	Edward Bird 7-28-00	Nick Marrone 7-28-00	0

QUALITY ASSURANCE DOCUMENT

This document has been prepared, checked and reviewed/approved in accordance with the Quality Assurance requirements of 10CFR50, Appendix B, as specified in the MPR Quality Assurance Manual.

MPR

MPR Associates, Inc.
320 King Street
Alexandria, VA 22314

RECORD OF REVISIONS

Calculation No.	Prepared By	Checked By	Page: 2
420-004-AAB-1			Revision: 0

Revision	Affected Pages	Description
0	All	Initial Issue

Note: *The revision number found on each individual page of the calculation carries the revision level of the calculation in effect at the time that page was last revised.*

CONTENTS

Section	Page
1.0 Purpose	4
2.0 Summary of Results	4
3.0 Approach	4
4.0 Finite Element Model	5
4.1 Geometry	5
4.2 Material Properties	6
4.3 Thermal Boundary Conditions	6
4.4 Structural Boundary Conditions	7
5.0 Results	8
5.1 Thermal	8
5.2 Stress	8
6.0 References	9
Attachment 1 – Geometric Keypoint Coordinates	37
Attachment 2 – Material Property Listing	42

1.0 PURPOSE

The purpose of this calculation is to document a finite element analysis of the AEA Technology Model 865 Projector for the thermal requirements of 10CFR71.73.4. The Model 865 Type B Projector is designed for radiographic inspections. The projector is shown on Figures 1 and 2.

10CFR71.73 specifies hypothetical accident conditions for which the projector must be designed. The thermal accident conditions include immersion in a 1475°F fire for 30 minutes. The acceptance criterion for the test is that there is not a significant increase in radiation levels external to the package following a hypothetical accident. For this calculation, the acceptance criterion is considered to be met if the calculated strains in the stainless steel components which contain the depleted uranium shield are less than the strain corresponding to the material ultimate strength at the test temperature.

2.0 SUMMARY OF RESULTS

Figure 3 shows contours of the stress intensity profile in the projector at 3 minutes, the time of maximum stress during the transient. The maximum stress intensity is 28 ksi. Figure 4 shows contours of total strain at 3 minutes. The maximum strain is less than 3%. This strain is considerably less than the strain at failure (40 to 50%) for stainless steel at a temperature of 1475°F.

An additional elastic-plastic stress pass was made at a time of 30 minutes to confirm that there is sufficient material strength at the highest temperatures to react the primary pressure loads. The maximum calculated total strain at 30 minutes is less than 1%.

3.0 APPROACH

A three-dimensional finite element model of the projector was developed with the ANSYS computer program (Reference 1). The projector components included in the model are:

- Projector Weldment
- Shield
- Upper and Lower Shield Collars
- Upper and Lower Shield Support Rings
- Handle
- Housing Support Legs

- Actuator Assembly Components, including:
  - Actuator Base
  - Actuator Body Weldment
  - Actuator Flange
  - Actuator Guard
- Shipping Cover
- Source Tube
- Source Rod and Capsule Holder

Half (180 degrees) of the projector was modeled based on geometric and loading symmetry.

A three-part sequential analysis technique was used. In the first part of the analysis, a thermal transient analysis was performed to calculate temperature profiles within the projector as a result of immersion in a fire. Radiation and convective heat transfer modes were considered. In the second part of the analysis, stresses in the projector components due to the calculated temperature profiles were determined on an elastic basis at several times during the transient. In the third part of the analysis, at the time of maximum elastic stress due to temperature, a final analysis was performed with elastic-plastic material properties. The effects of bounding internal pressure were included in the final analysis.

4.0 FINITE ELEMENT MODEL

4.1 Geometry

One half of the transport package is modeled. Figures 5 through 8 show the finite element model components. Dimensions for the model are from References 2 through 22. Figures 9, 10 and 11 show key-point numbers for a cross section of the model. Keypoint coordinates for the cross sections are listed in Attachment 1 to this calculation.

The model is meshed with hexahedral (SOLID70 for thermal; SOLID45 for structural) and tetrahedral elements (SOLID87 for thermal; SOLID92 for structural). A surface effect element (SURF152) is used on the outside of the model to facilitate the application of the thermal boundary conditions.

The transport package includes thin brass shield support rings that separate the depleted uranium from the stainless steel. These rings are modeled explicitly and are assumed to completely fill the gap between the depleted uranium shield and the upper/lower shield collars. Perfect thermal contact is assumed

between the stainless steel on one side and the depleted uranium on the other. Structurally, these rings provide little mechanical resistance due to the low strength of brass at high temperature.

4.2 Material Properties

The projector weldment (including the upper and lower shield collars), housing handle, housing support, actuator assembly (including the actuator base, actuator body weldment, and the actuator flange), shipping cover, and the actuator guard are constructed from 304 stainless steel. Depleted uranium is used for the shield. Thin brass shield support rings are used between the stainless steel and uranium. The entire source rod/capsule holder assembly is modeled as tungsten. A brass tube separates the tungsten source rod from the depleted uranium shield. Material properties for these four materials from References 23 through 26 are used in the model and are listed in Attachment 2 to this calculation. The properties are temperature dependent for all but brass.

The mechanical strength of the brass at elevated temperature is assumed to be negligible. Accordingly, the elastic modulus for this material was set to 1000 psi.

Elastic-plastic material properties for the stainless steel components were used for the final analysis runs. Bi-linear stress strain curves as a function of temperature were input. The yield stress values used are shown in Table 4-1. A tangent modulus (slope of the stress strain curve in the plastic region) of 5×10^5 psi was used for each curve.

Table 4-1
Yield Stress Values for 304 Stainless Steel (Reference 17)

Temperature (°F)	Yield Stress (ksi)
100	29.01
300	22.39
600	18.27
900	16.21
1200	14.20
1500	9.50

4.3 Thermal Boundary Conditions

Thermal boundary conditions representing immersion in a fire at 1475°F were applied to the finite element model on all exterior surfaces. These surfaces include the outer surfaces of the housing and shipping cover. The bottom of the lower shield collar was also heated (i.e., the projector is assumed to be

suspended in the fire). The symmetry plane of the model was represented by a no heat flow condition (i.e., insulated).

Radiation and convection heat transfer modes were included to account for heat flow from the fire to the projector. For radiation, the outer surfaces of the projector were conservatively assumed to be black bodies; absorbing all radiation. An absorptivity/emissivity of 1.0 was assumed for the exterior surfaces. A form factor of 1.0 for the exterior surfaces was assumed indicating the cask is fully engulfed by the fire. Based on a review of typical fossil-fired furnace design coefficients, a heat transfer coefficient of 20 BTU/hr-ft^2-°F was assumed on the exterior surfaces for convection. The shield, brass source tube, and the source rod/capsule holder assembly were assumed to be in perfect thermal contact with each other.

Heat flow across the air gaps inside the projector was also considered. The AUX12 radiation matrix generator within ANSYS was used to generate matrices of form factors (view factors) between the radiating internal surfaces of the projector. The hidden-line algorithm in AUX12 was used to calculate the form factors. This algorithm determines which elements are "visible" to every other element (a "target" element is visible to a "viewing" element if their normals point toward each other and there are no blocking elements). Each radiating or "viewing" element is enclosed in a unit hemisphere. All "target" or receiving elements are projected onto the hemisphere. To calculate the form factor, a predetermined number of rays (20 in the present analysis) are projected from the viewing element to the hemisphere. Thus, the form factor is the ratio of the number of rays incident on the projected surface to the number of rays emitted by the viewing element. The radiation matrices were then used as superelements (MATRIX50) in the thermal analysis. Convective heat transfer in the confined space within the projector was assumed to be negligible.

4.4 Structural Boundary Conditions

Structural boundary conditions were applied to the projector finite element model to determine thermal expansion stresses and stresses due to internal pressure. Thermal expansion stresses result from differential thermal expansion of the projector components.

Pressure stresses result from the air inside the projector weldment heating up and expanding (according to the ideal gas law). It was conservatively assumed in this analysis that the projector weldment is pressurized, i.e., it is assumed that the air in the projector weldment is not vented through the projector label plate rivet holes. The shipping cover is not air-tight and the volume within the cover is not pressurized. This approach results in the maximum differential pressure across the upper shield collar.

Internal pressures were applied in the final elastic-plastic analyses. The bounding value of the applied pressure is determined as follows:

$$P_2 = \frac{T_2}{T_1} P_1 = \frac{(1475+460)}{(70+460)} 15 = 55 \text{ psi}$$

Displacements are constrained at the plane of symmetry in the direction normal to the plane of symmetry (y direction), along a vertical line through the origin in the x direction , and at a single node on the bottom of the lower shield collar in the z direction.

5.0 RESULTS

5.1 Thermal

Figures 12 through 16 show temperature profiles in the projector at selected times during the temperature transient. At three minutes into the transient (Figure 13) the exterior surfaces of the shipping cover and the housing have heated up to nearly 1300°F. The handle and the housing support have heated up to nearly 1475°F. However, the inside of the projector is still relatively cool. By 30 minutes, the projector has nearly reached an equilibrium temperature of 1475°F.

5.2 Stress

Figures 17 through 23 show contours of stress intensity in the projector at selected times during the temperature transient. These stresses were calculated with elastic material properties and do not include pressure loads. This phase of the analysis was used to identify the time of maximum thermal stress. The maximum thermal stress intensity occurs at 3 minutes and is located in the projector weldment shell near the sharp corner of the lock cut-out.

As shown in Figure 19, high stresses occur at the connection between the projector weldment shell and the upper shield collar. This is due to the expansion of the projector weldment shell which is restrained by the cooler upper shield collar. The maximum calculated elastic stress of 273 ksi occurs at the sharp corner of the lock cut-out due to stress concentration effects. This maximum stress would not occur in the projector weldment subjected to the specified thermal conditions because the stainless steel shell material would yield and relieve the stress. These thermal expansion stresses are secondary and the maximum stress intensity does not occur in the material that forms the containment boundary around the depleted uranium shield.

To obtain a more realistic picture of the stress and strain condition in the projector, the stress pass was repeated at the time of maximum elastic thermal stress, 3 minutes, with elastic-plastic material properties. Pressure loads were included in this stress pass. Figures 3 and 4 show contours of stress intensity and total (elastic + plastic) strain. The maximum stress is reduced from 273 ksi to 28 ksi due to yielding in the material. The maximum calculated strain of less than 3% occurs near the lock cut-out in the projector

shell which is also the location of maximum elastic stress intensity. The beam window in the projector shell, where the shell thickness reduces from 0.12" to 0.06", experiences a maximum strain of less than 2%. Material testing shows that 304 stainless steel at 1475°F will not rupture until the strain reaches 40 to 50% (Reference 27). Consequently, a strain of less than 3% is judged to be acceptable.

An elastic-plastic stress pass was made at a time of 30 minutes to confirm that there is sufficient material strength at the highest temperatures to react the primary pressure loads. Figure 24 shows that the stress results are bounded by the stresses at 3 minutes. The maximum calculated total strain at 30 minutes is less than 1%.

An additional elastic stress pass was made with the containment boundary subject to an internal pressure load of 55 psi and a uniform temperature of 70°F to evaluate the effect of the pressure load alone on the containment boundary. The beam window with a reduced shell thickness of 0.06" was a location of particular interest. As seen in Figure 26, the maximum elastic stress intensity of 5 ksi occurs due to stress concentration at the connection between the actuator and the upper shield collar. The beam window experiences a stress intensity of less than 4 ksi. These stresses are judged to be acceptable.

6.0 REFERENCES

1. ANSYS Finite Element Analysis Computer Program, Version 5.6 installed on a Sun Ultra 2 workstation running the Solaris 7 operating system. The ANSYS installation verification is documented in QA-56-1
2. AEA Drawing No. 86500, Type B Underwater Projector, Rev. F
3. AEA Drawing No. 86500-14, Model 865 Outline Dimension, Rev. A
4. AEA Drawing No. 86501, Projector Weldment, Rev. G
5. AEA Drawing No. 86502, Housing Weldment, Rev. J
6. AEA Drawing No. 86501-6, Shield Collar, Lower, Rev. D
7. AEA Drawing No. 86502-3, Shield Collar, Upper, Rev. C
8. AEA Drawing No. 86501-1, Shield Support Ring, Lower, Rev. B
9. AEA Drawing No. 86501-2, Shield Support Ring, Upper, Rev. B
10. AEA Drawing No. 86502-1, Housing Support, Rev. C
11. AEA Drawing No. 86502-2, Handle, Rev. B
12. AEA Drawing No. 86505, Actuator Base Sub-Assembly, Rev. C
13. AEA Drawing No. 86505-1, Actuator Base, Rev. C

14. AEA Drawing No. 86500-5, Actuator Flange, Rev. G
15. AEA Drawing No. 86500-3, Actuator Body Weldment, Rev. C
16. AEA Drawing No. 86500-8, Shipping Cover, Rev. D
17. AEA Drawing No. 86500-12, Actuator Guard, Rev. F
18. AEA Drawing No. 86501-3, Shield, Rev. G
19. AEA Drawing No. 86505-2, Source Tube, Rev. B
20. AEA Drawing No. 86504, Source Rod and Capsule Holder Assembly, Rev. D
21. AEA Drawing No. 86504-1, Source Rod, Rev. G
22. AEA Drawing No. 86504-2, Source Capsule Holder, Rev. B
23. Marchbanks, M.F., Moen, R.A., and Irvin, J.E., Nuclear Systems Materials Handbook, Part I - Structural Materials, Group 1 - High Alloy Steels, Section 2 - 304 SS Annealed, Revision 8, 1976.
24. Rohsenhow, W.M., Hartnett, J.P., and Cho, Y.I. (Eds.), Handbook of Heat Transfer, Third Edition, McGraw-Hill (Properties for Tungsten and Uranium obtained from Chapter 2 - Thermophysical Properties).
25. Metals Handbook, Volume 2, Tenth Edition, 1990.
26. Tungsten (W) thermal expansion coefficient from Matweb, Online Materials Information Resource, http://www.matweb.com.
27. Aerospace Structural Metals Handbook, 1991 Edition.

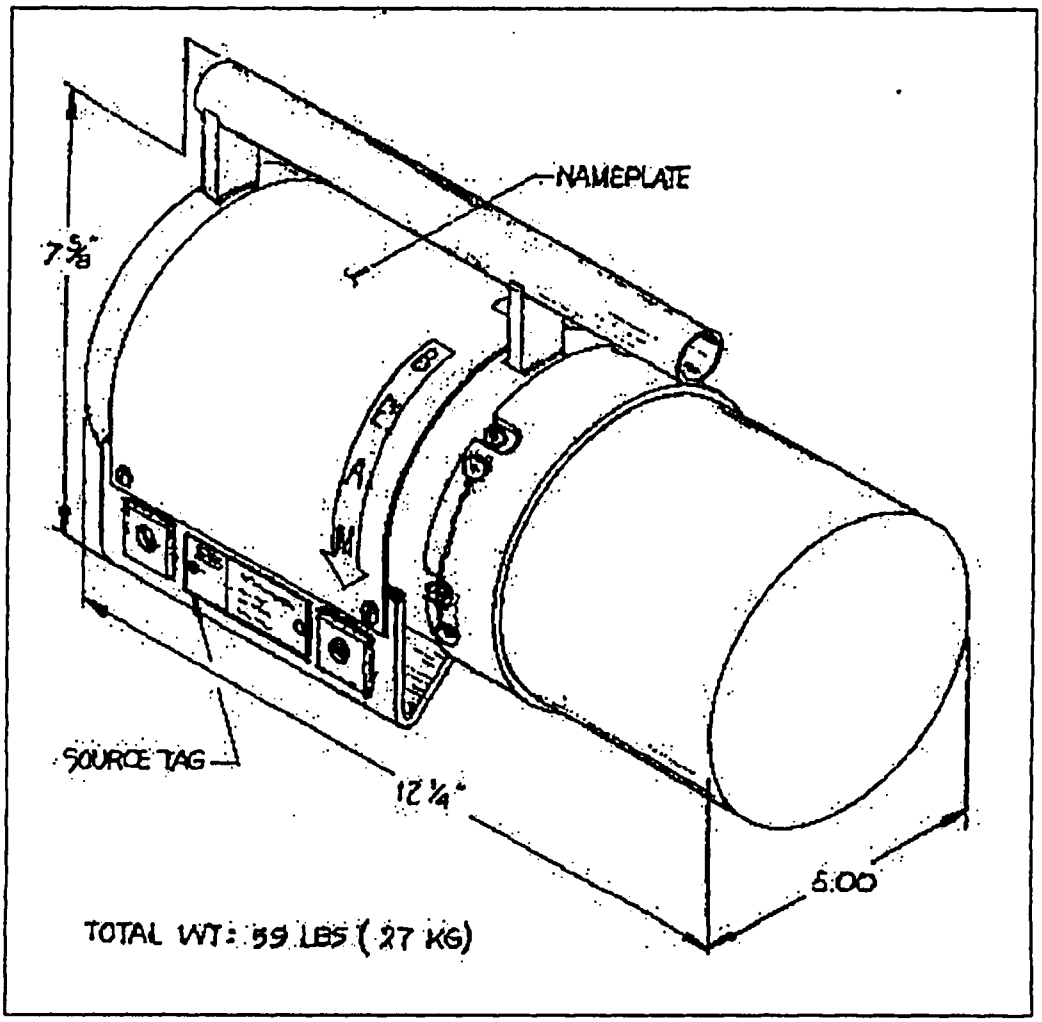

Figure 1
Isometric View of Model 865 Type B Projector

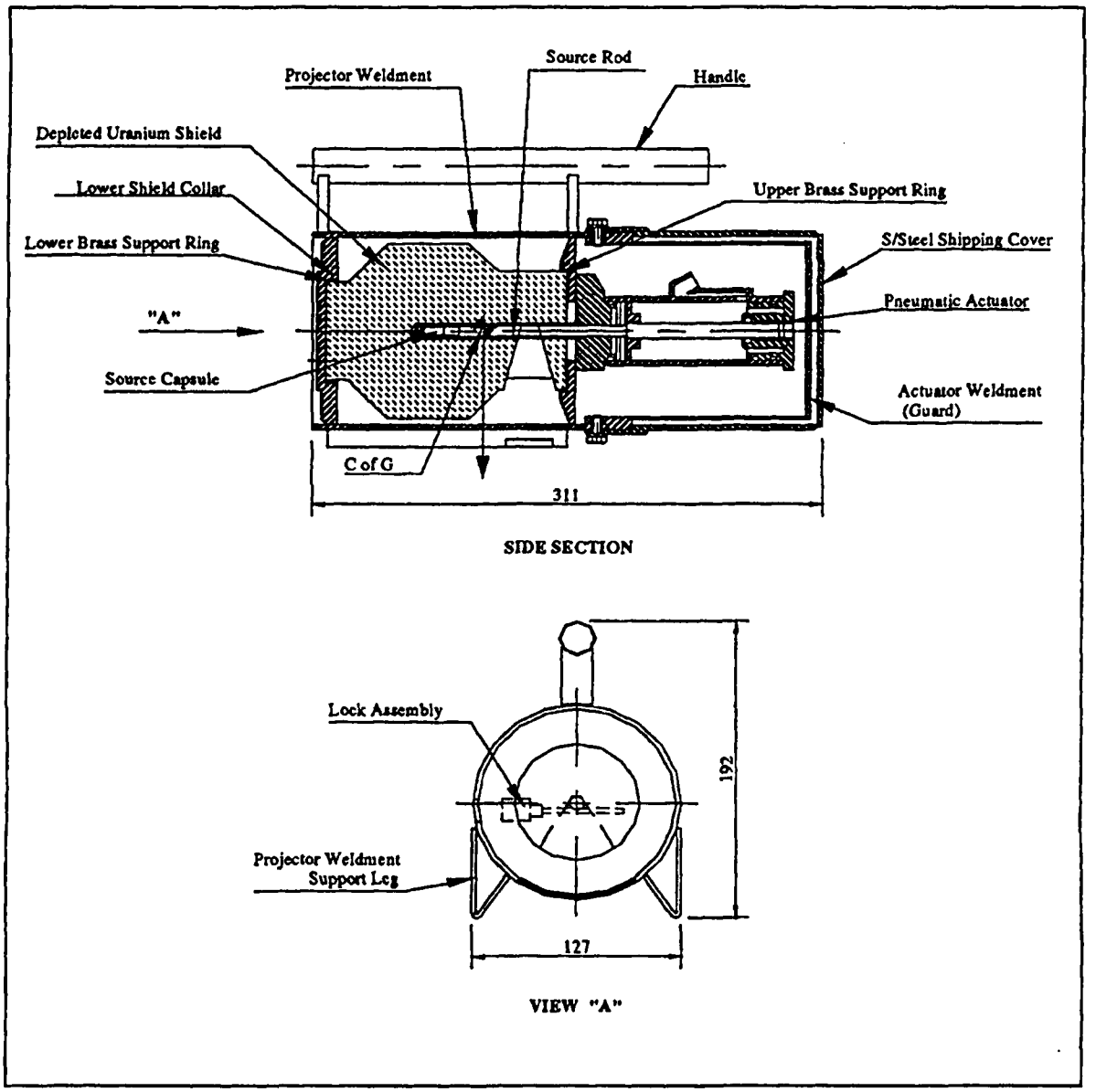

Figure 2
Model 865 Type B Projector Schematic

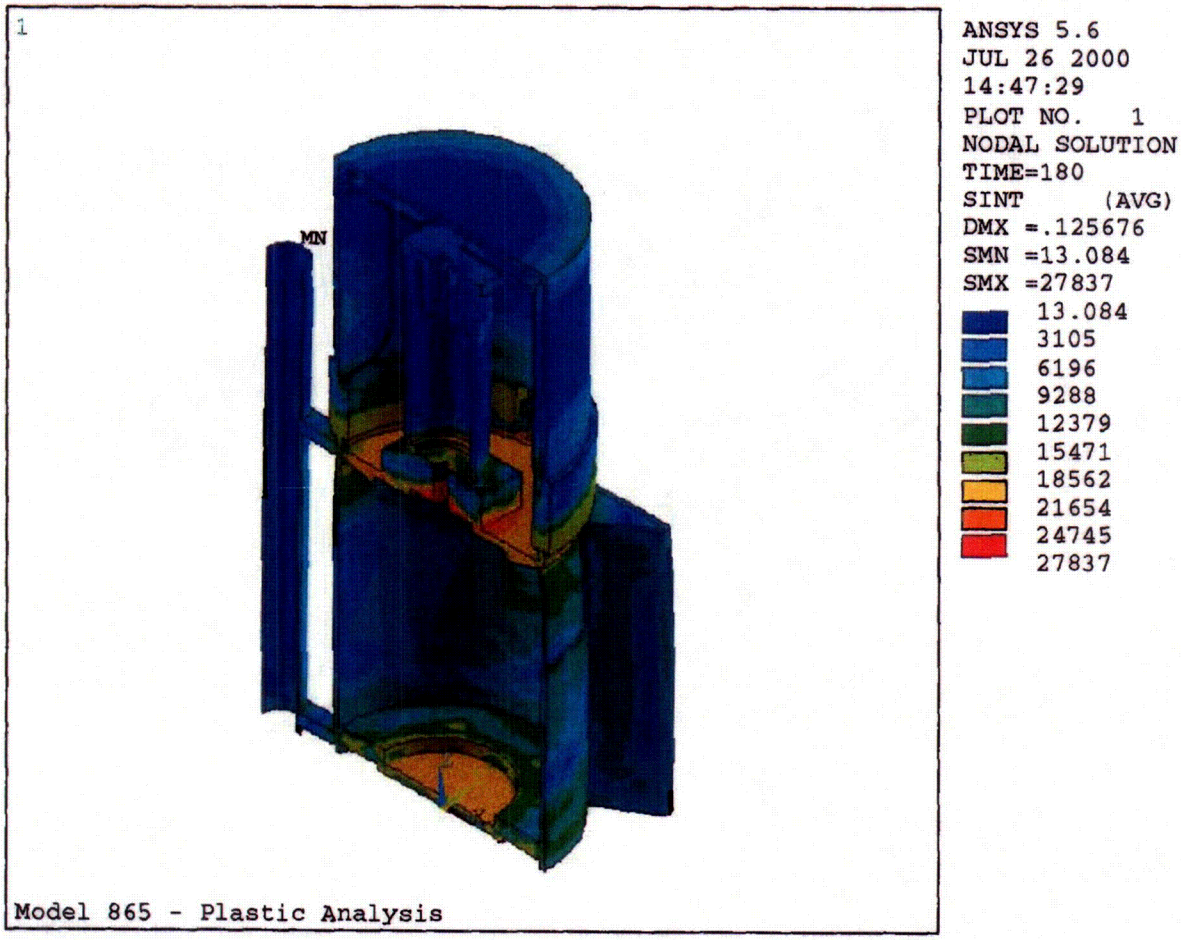

Figure 3
Model 865 Stress Intensity Profile at 3 Minutes

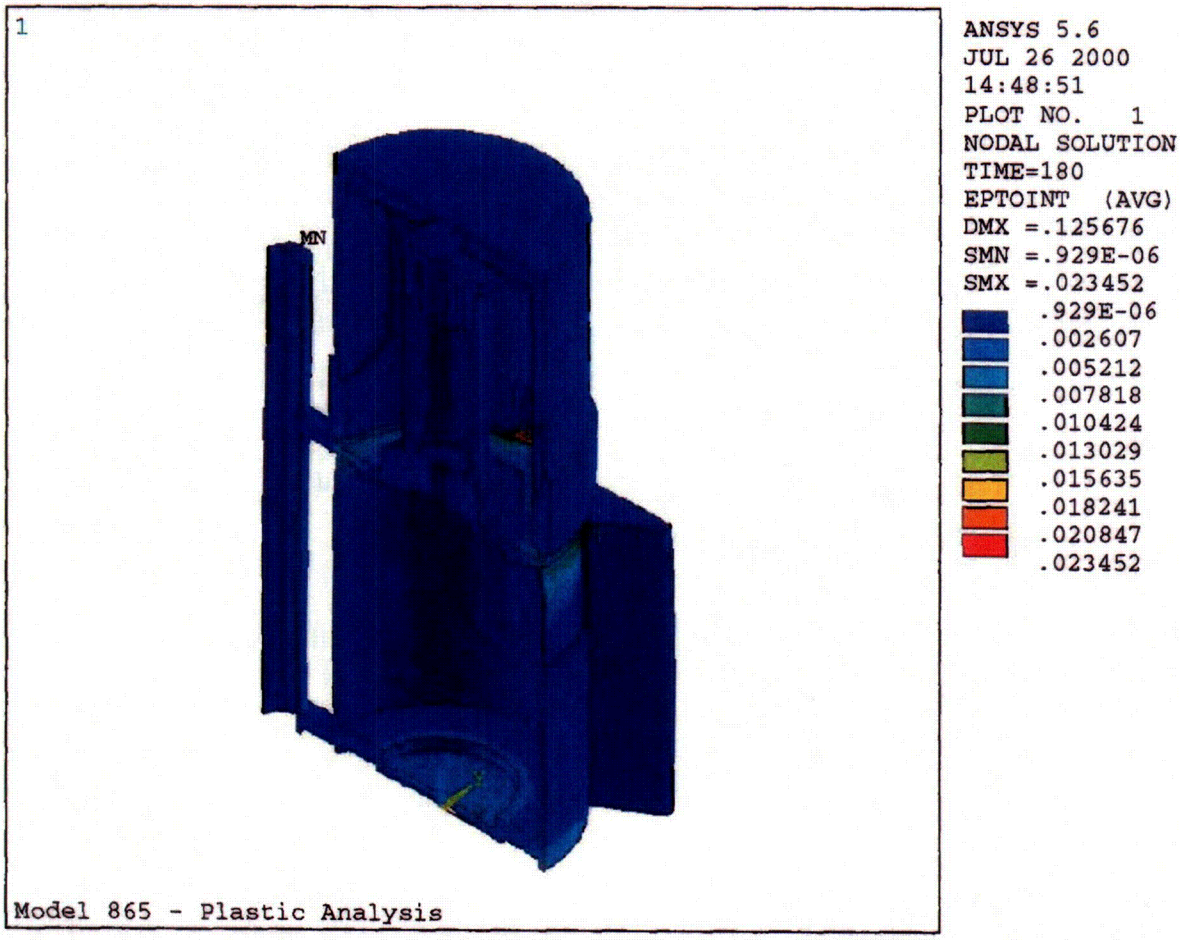

Figure 4
Model 865 Strain Intensity Profile at 3 Minutes

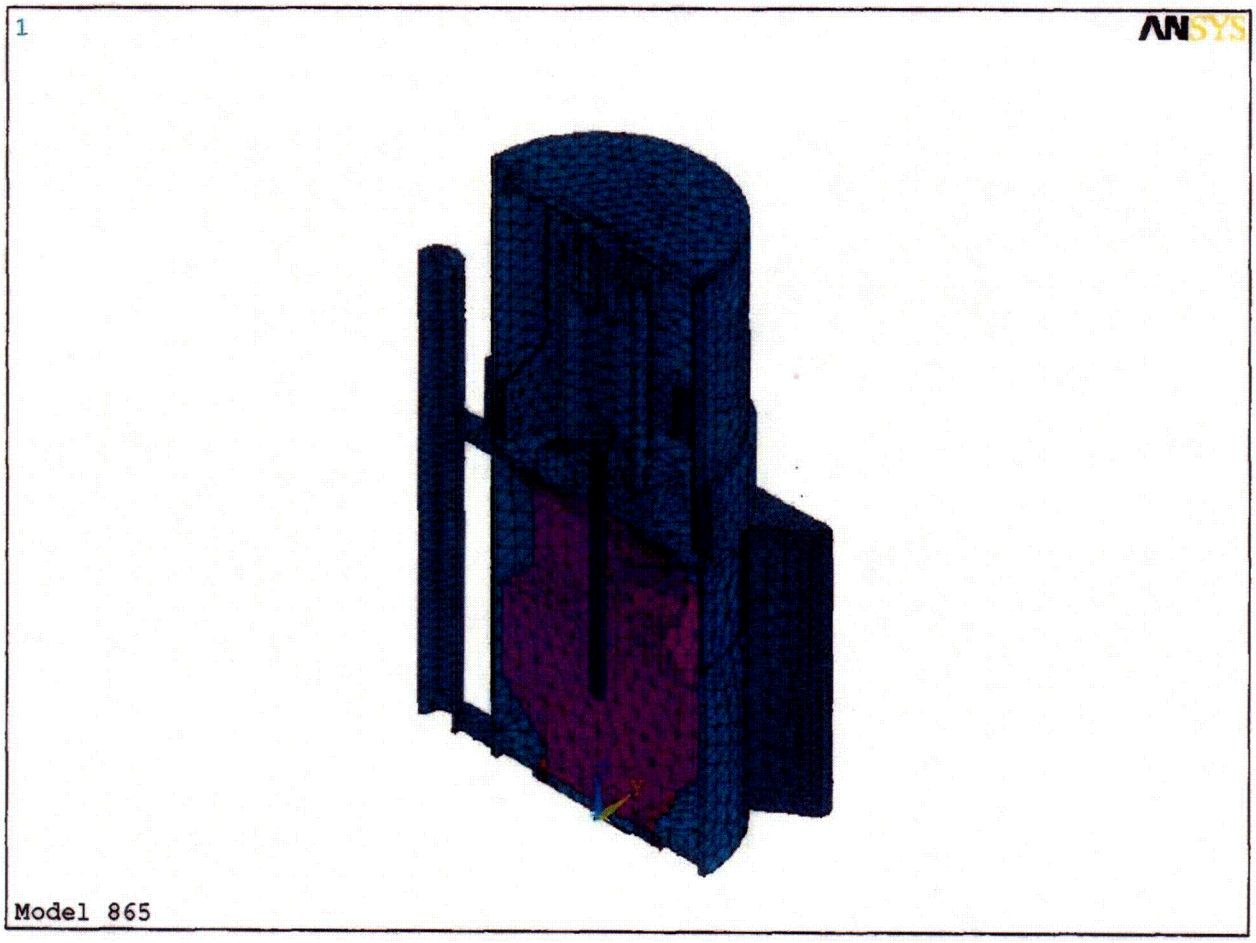

Figure 5
Model 865 Finite Element Model

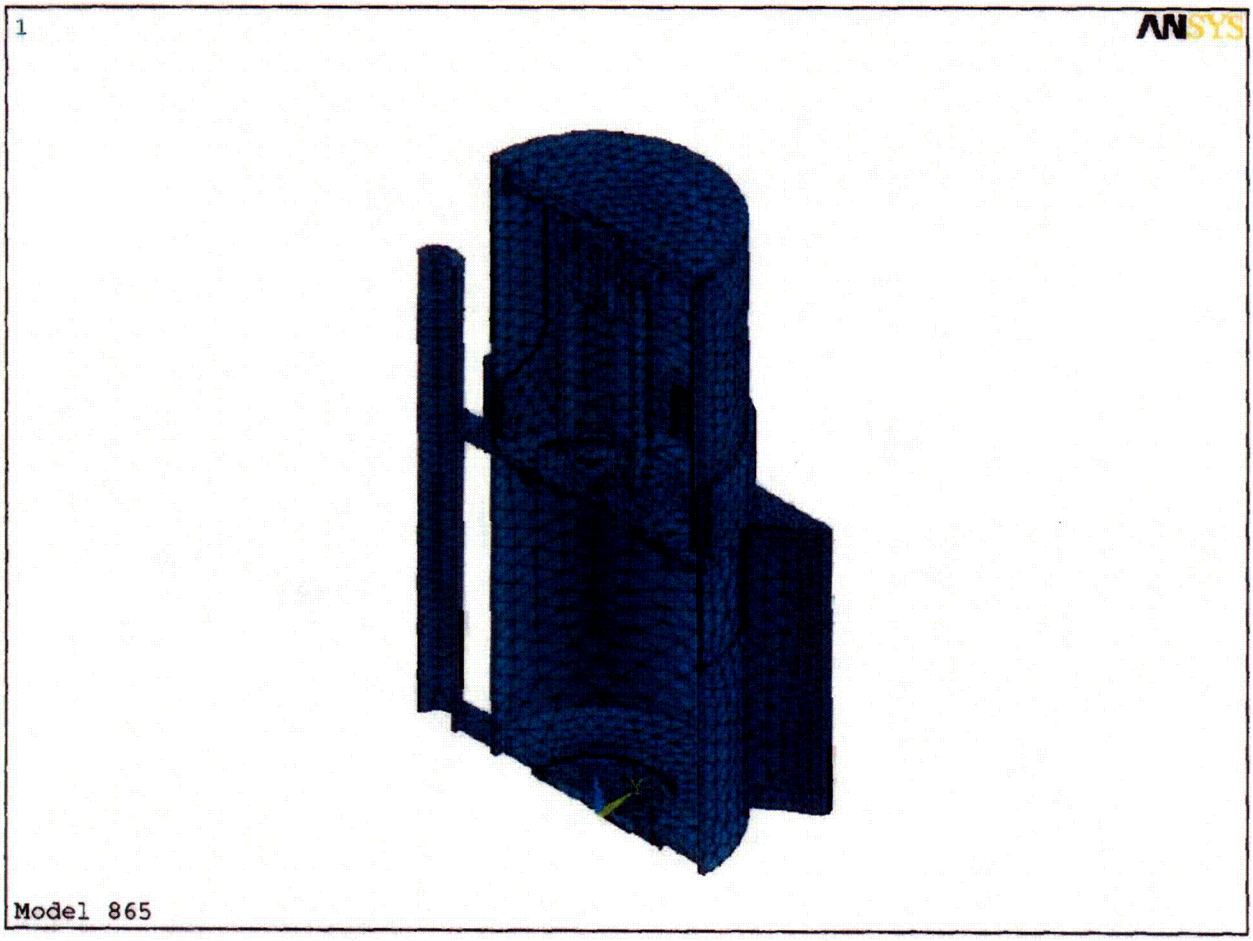

Figure 6
Model 865 Finite Element Model – Projector Weldment (includes the Upper and Lower Shield Collars), Housing Support, Handle, Actuator Assembly (includes Actuator Base, Actuator Body Weldment, and Actuator Flange), Actuator Guard, and Shipping Cover.

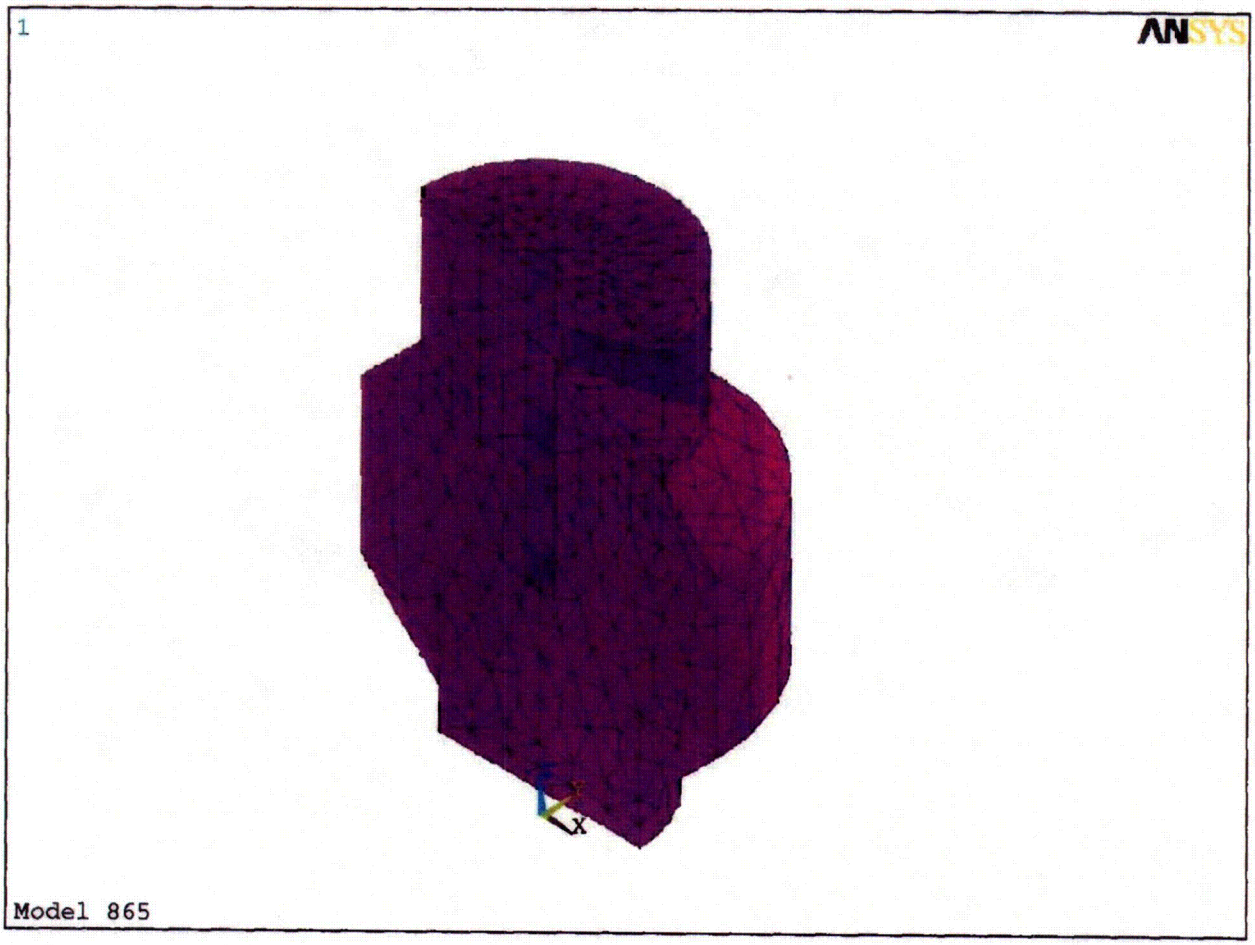

Figure 7
Model 865 Finite Element Model – Shield

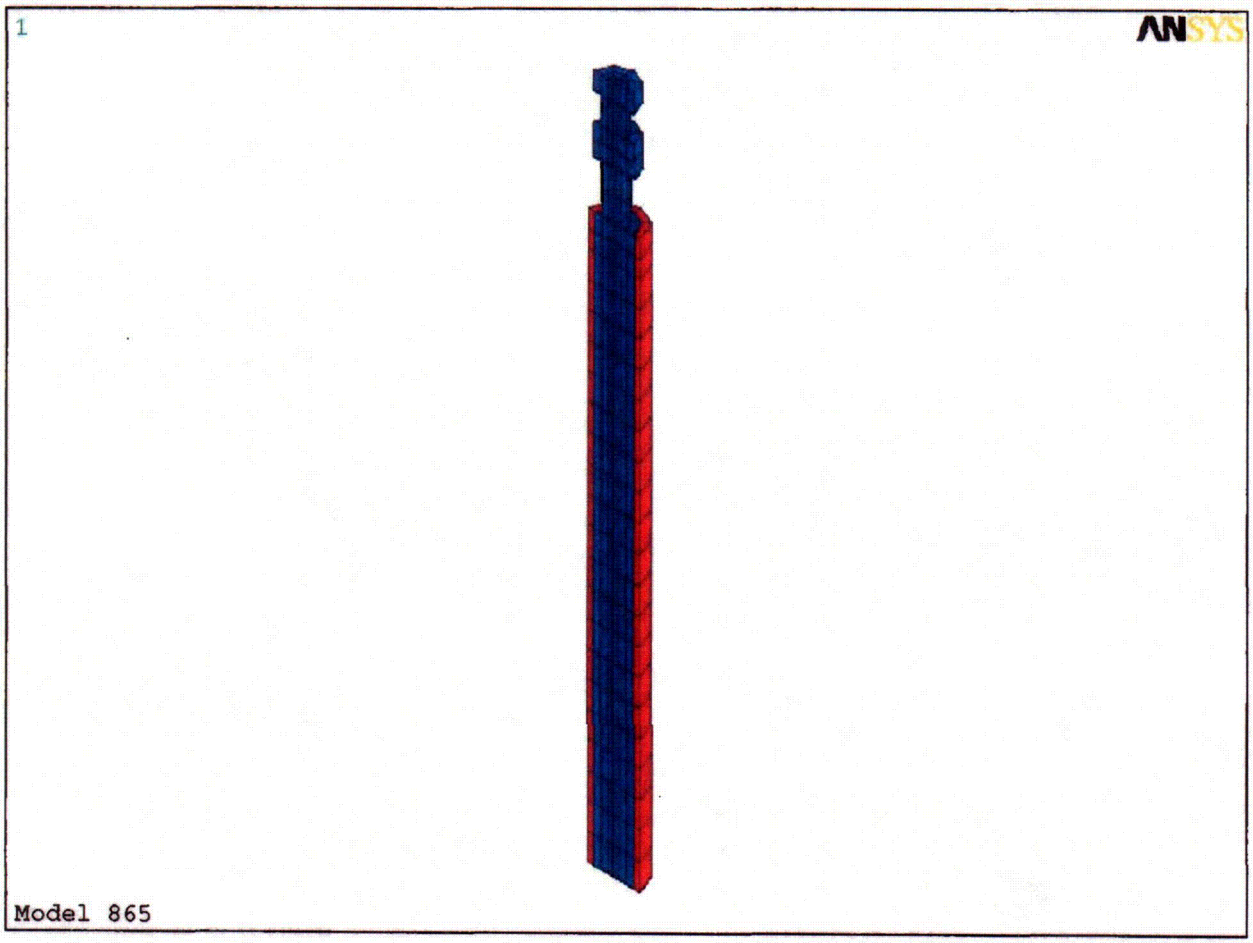

Figure 8
Model 865 Finite Element Model – Source Rod/Capsule Holder Assembly and Source Tube

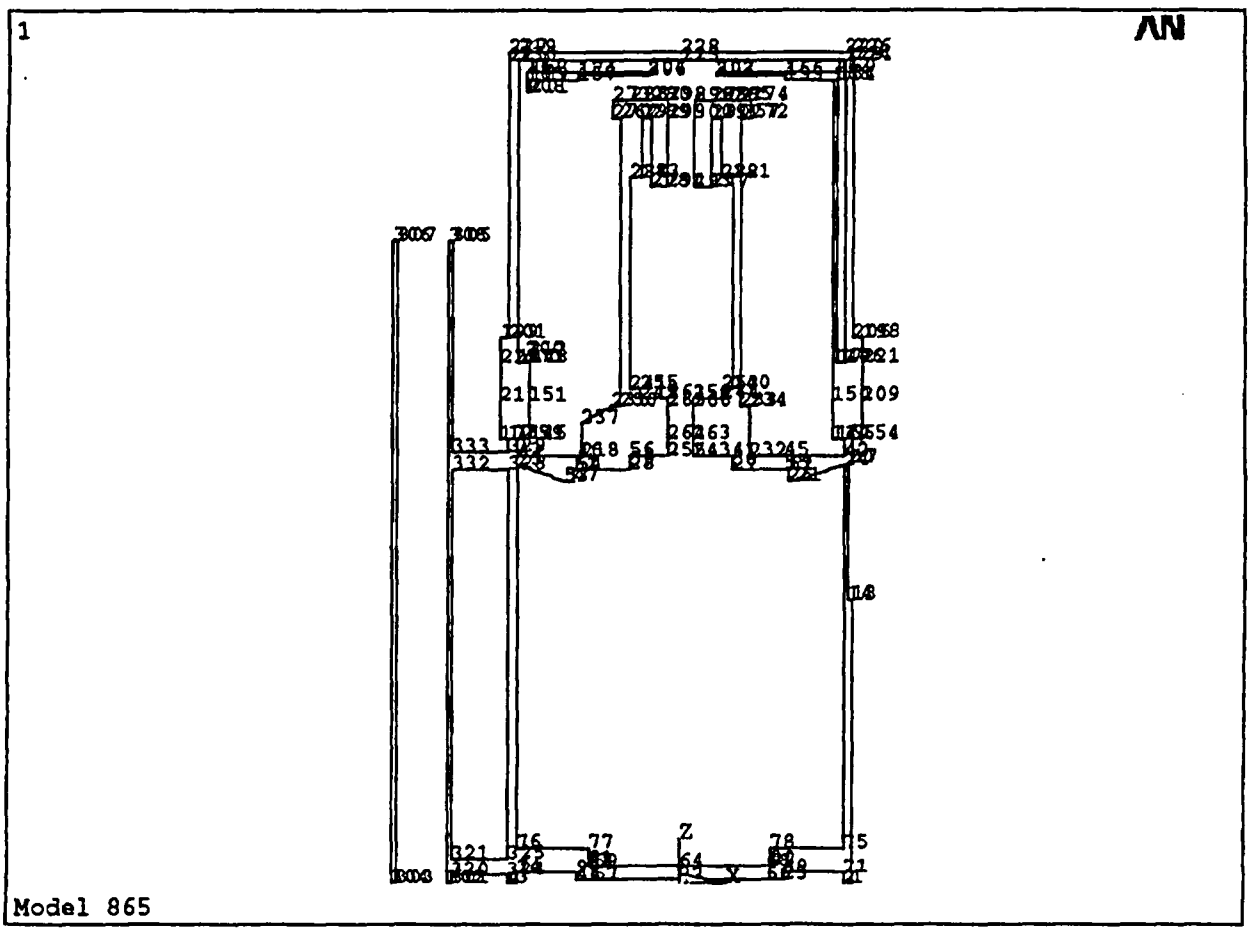

Figure 9
Geometric Keypoints – Projector Weldment, Handle, Housing Support, Actuator Assembly, Actuator Guard, and Shipping Cover

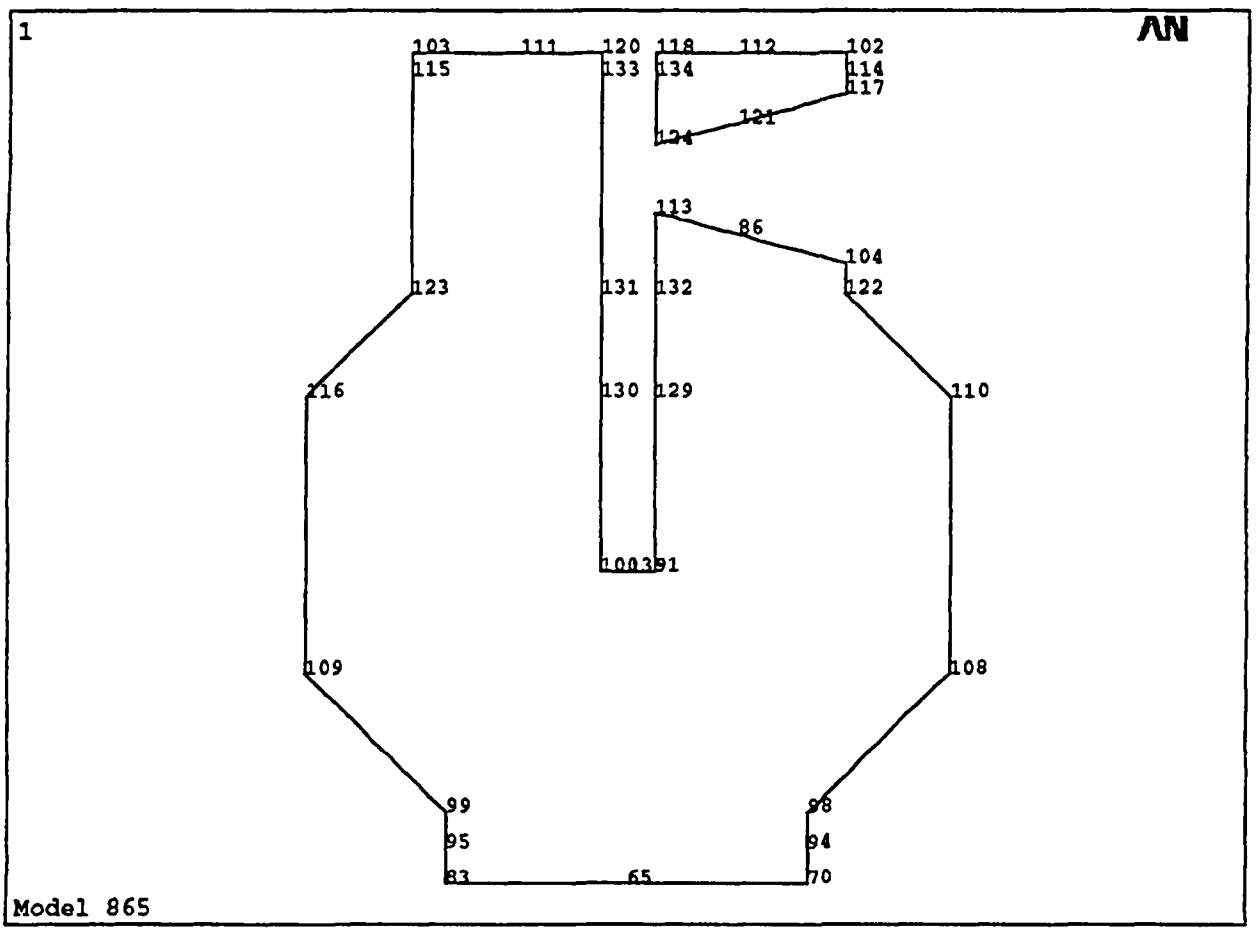

Figure 10
Geometric Keypoints – Shield

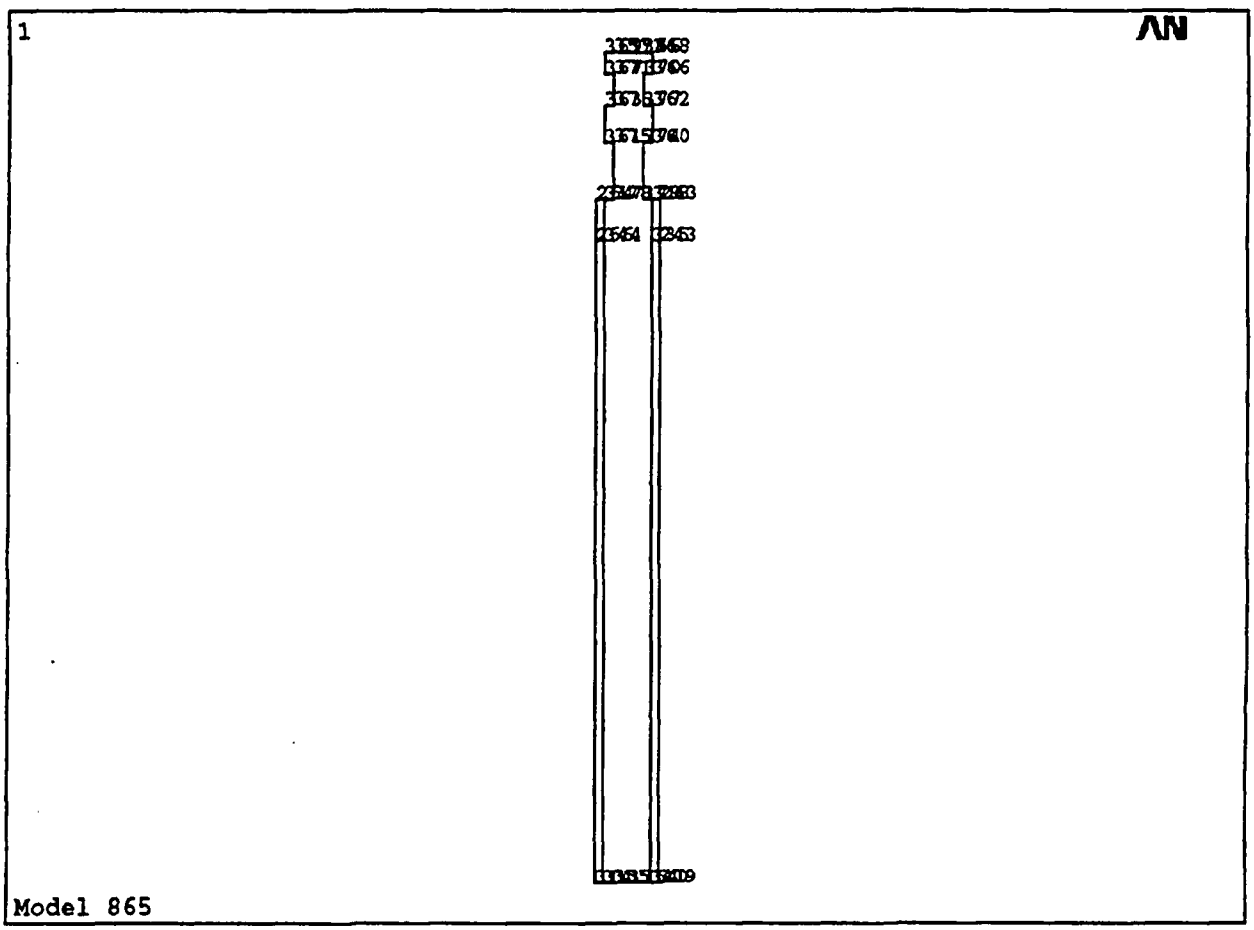

Figure 11
Geometric Keypoints – Source Rod/Capsule Holder and Source Tube

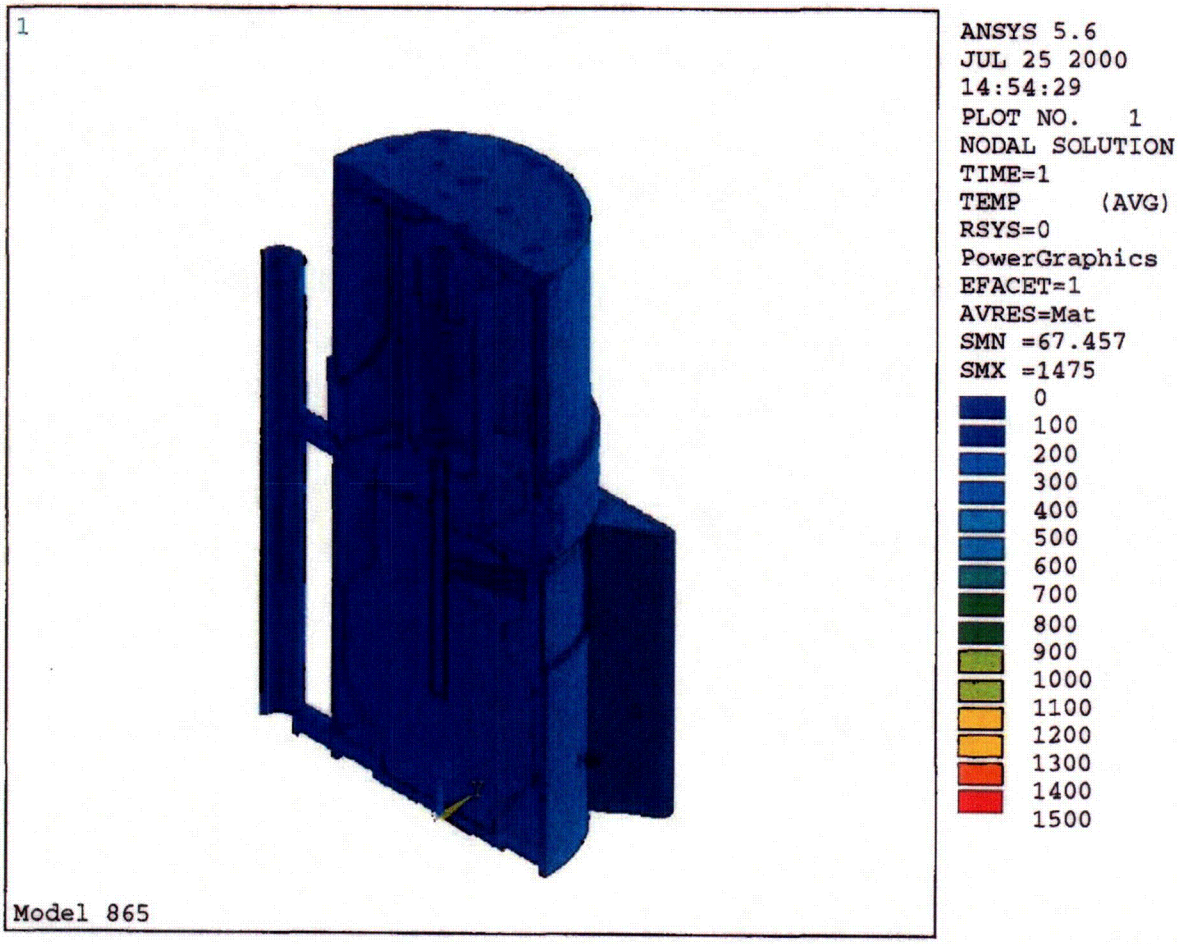

Figure 12
Temperature Profile at 1 Second

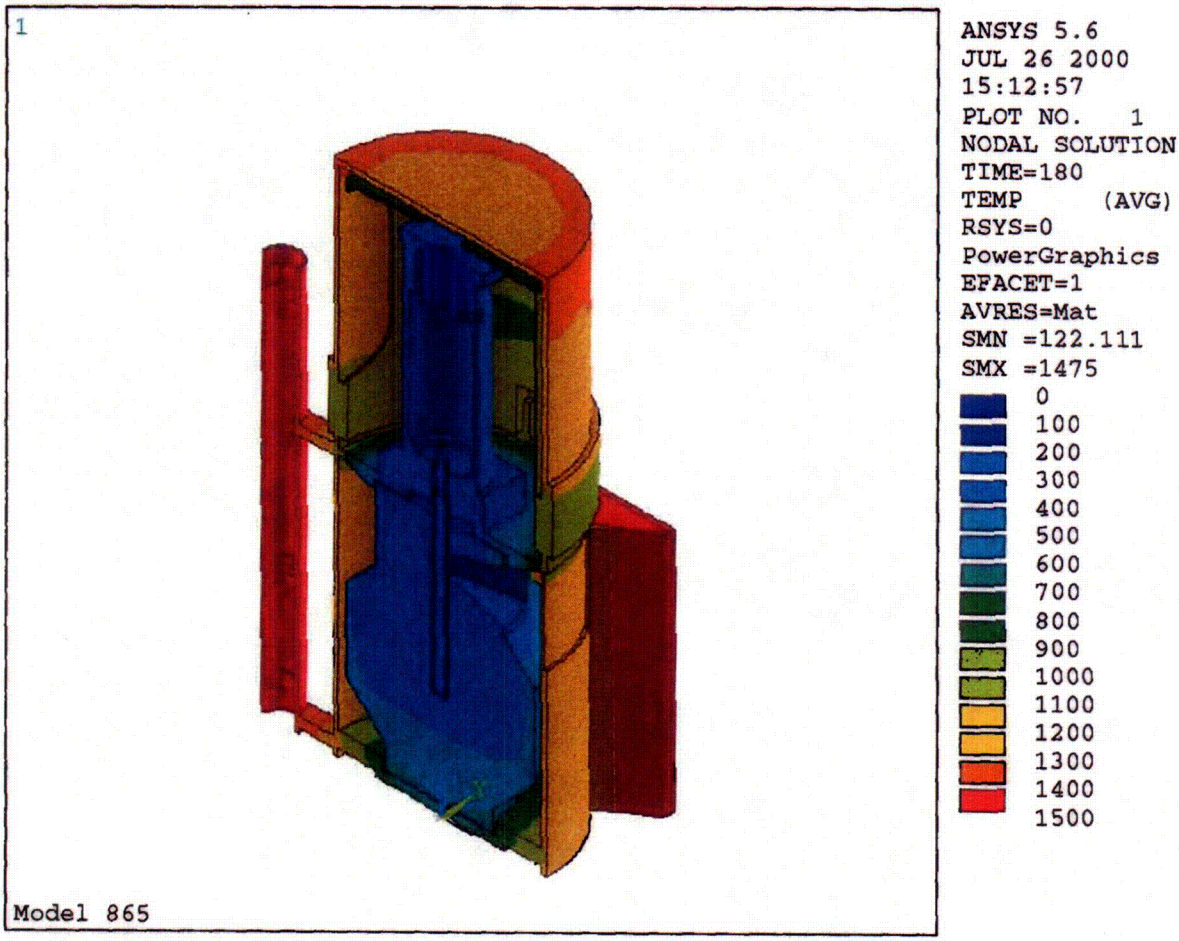

Figure 13
Temperature Profile at 3 Minutes

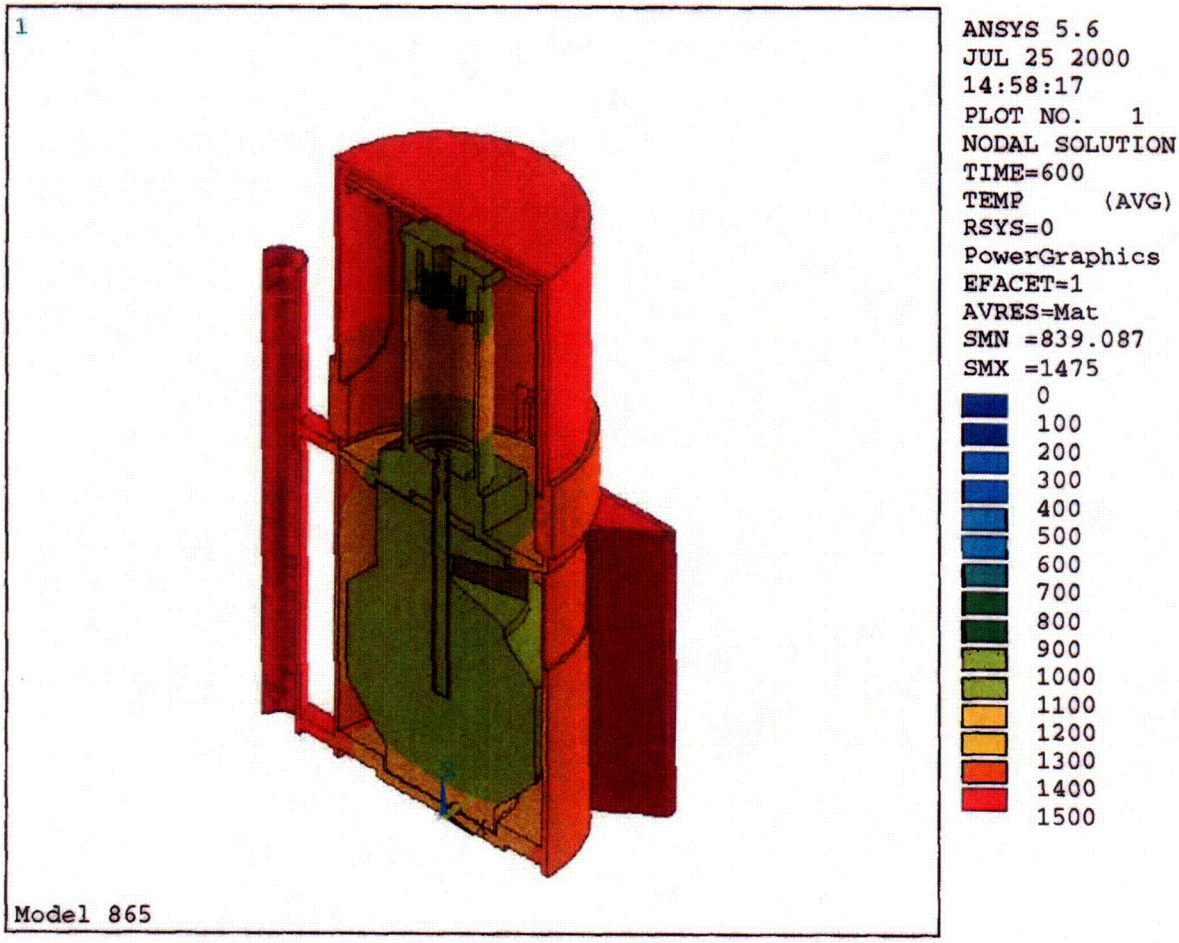

Figure 14
Temperature Profile at 10 Minutes

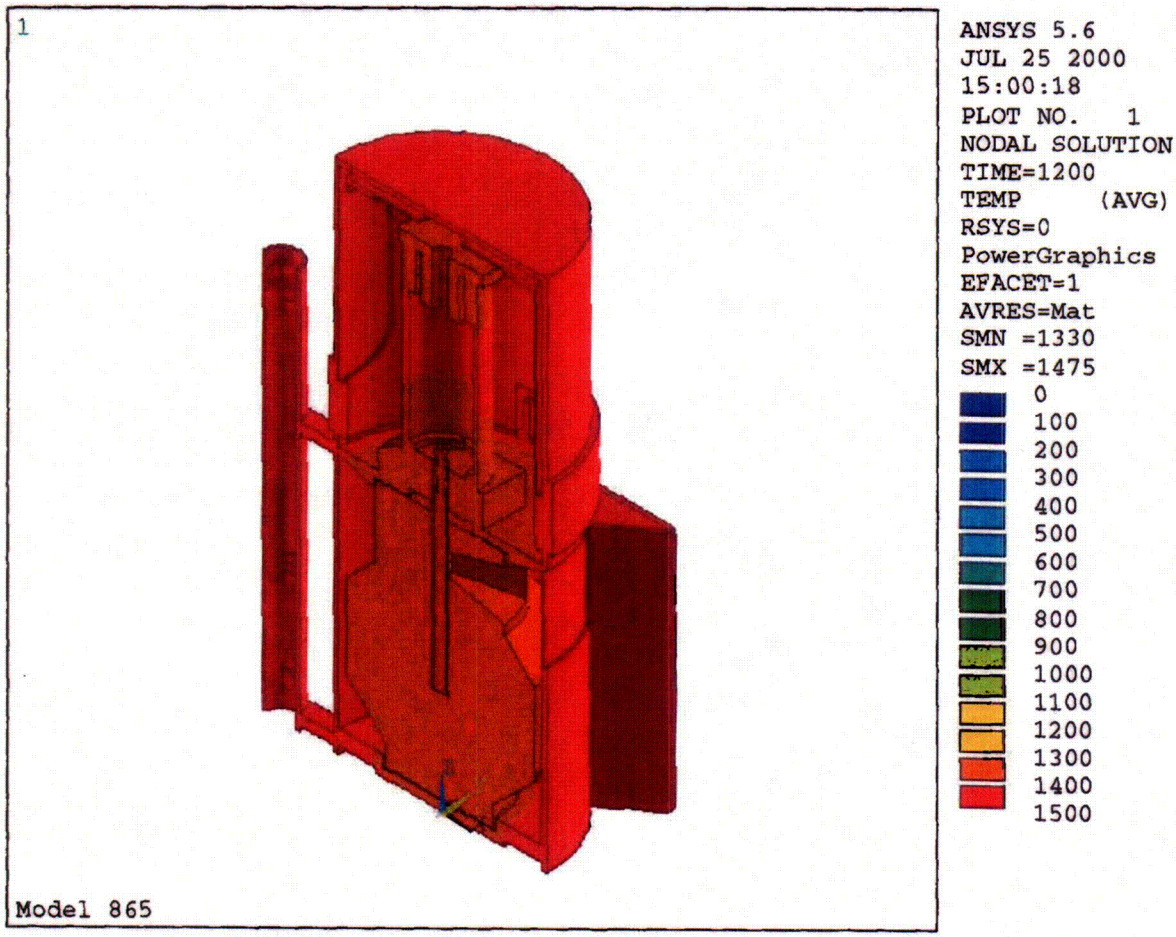

Figure 15
Temperature Profile at 20 Minutes

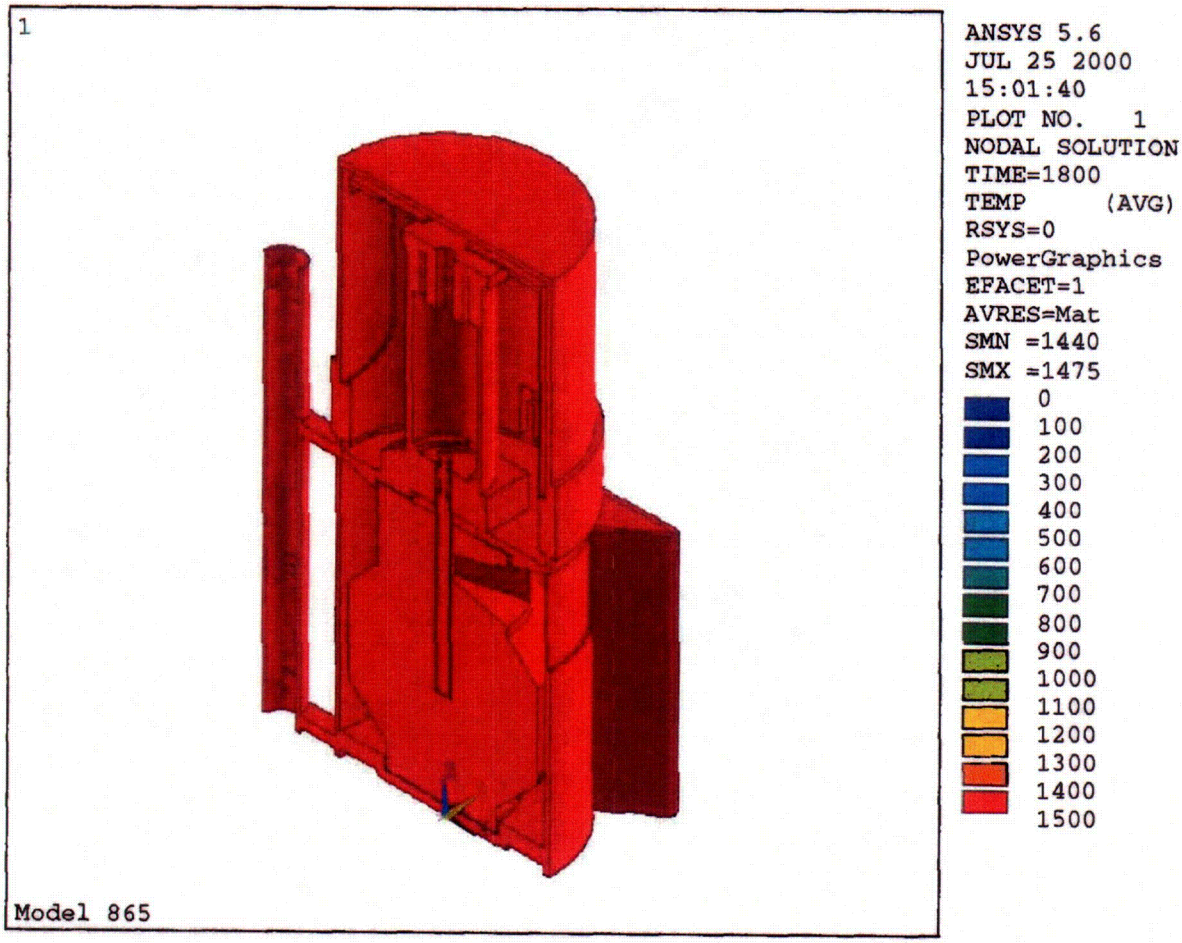

Figure 16
Temperature Profile at 30 Minutes

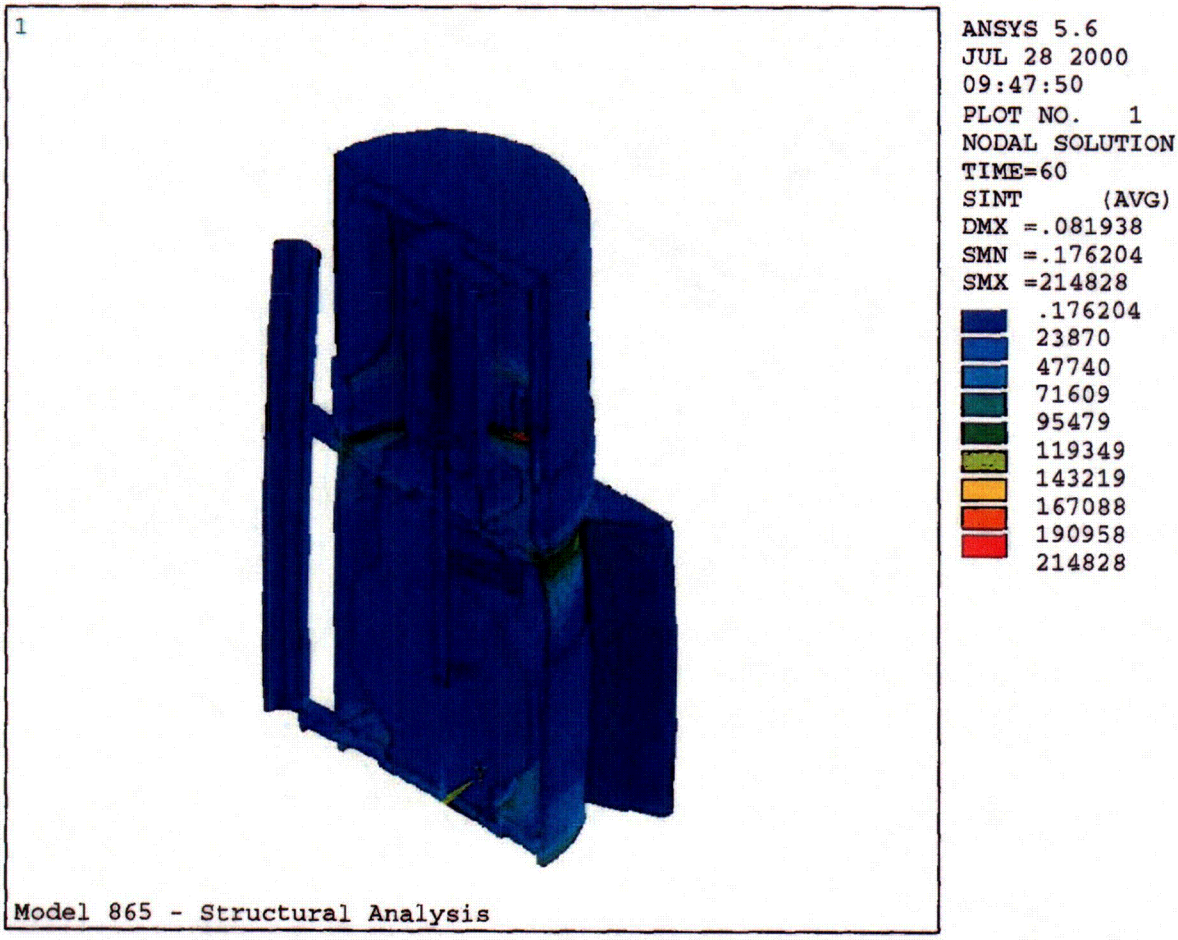

Figure 17
Stress Intensity Profile at 1 Minute

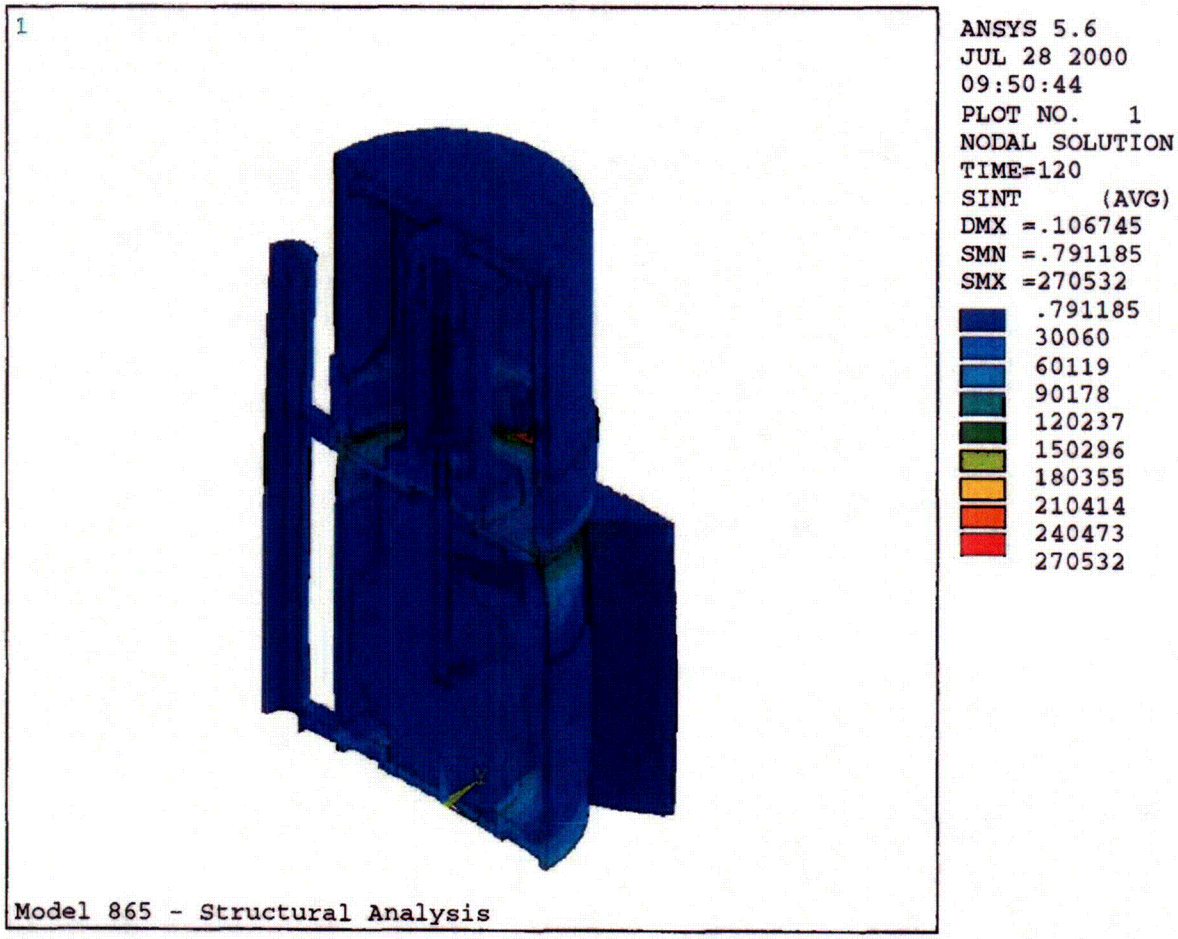

Figure 18
Stress Intensity Profile at 2 Minutes

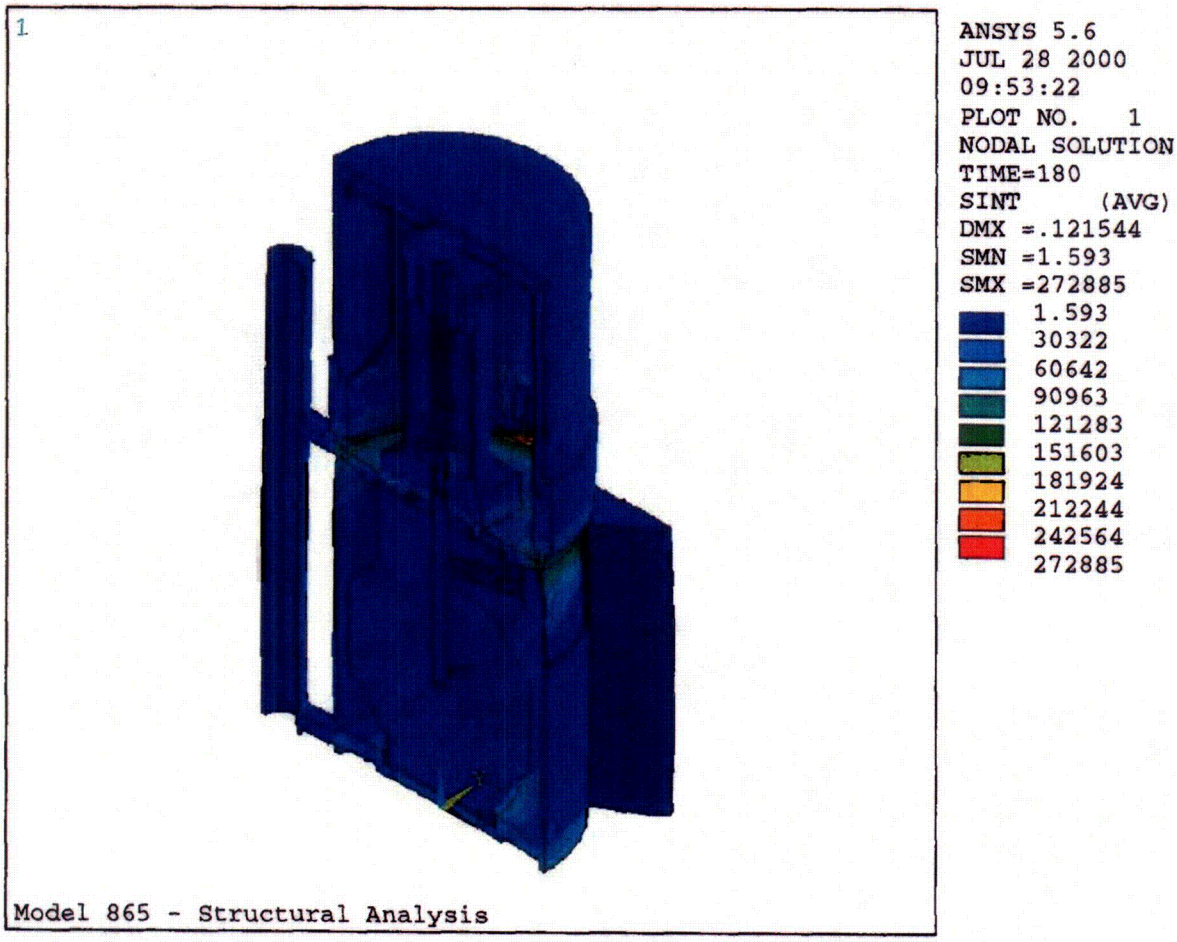

Figure 19
Stress Intensity Profile at 3 Minutes

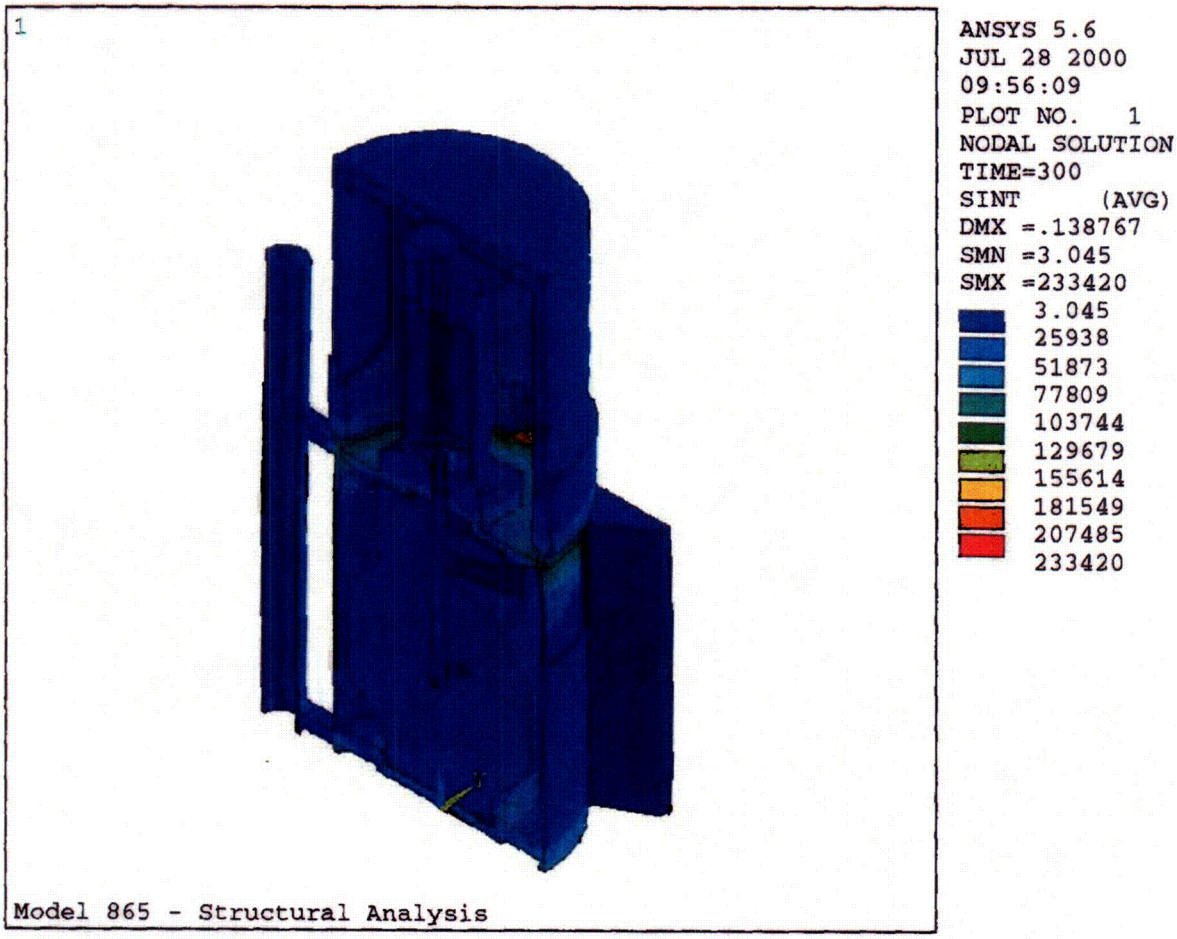

Figure 20
Stress Intensity Profile at 5 Minutes

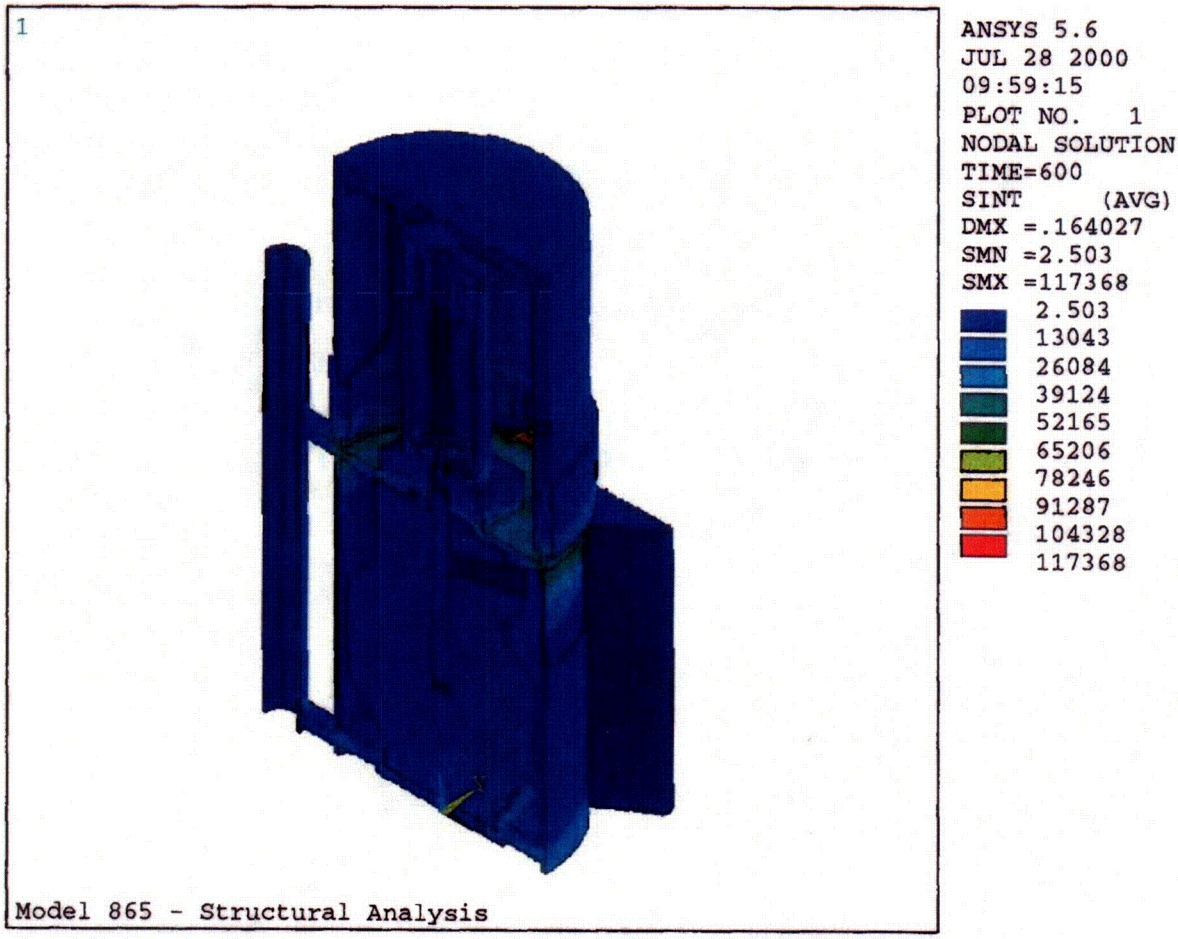

Figure 21
Stress Intensity Profile at 10 Minutes

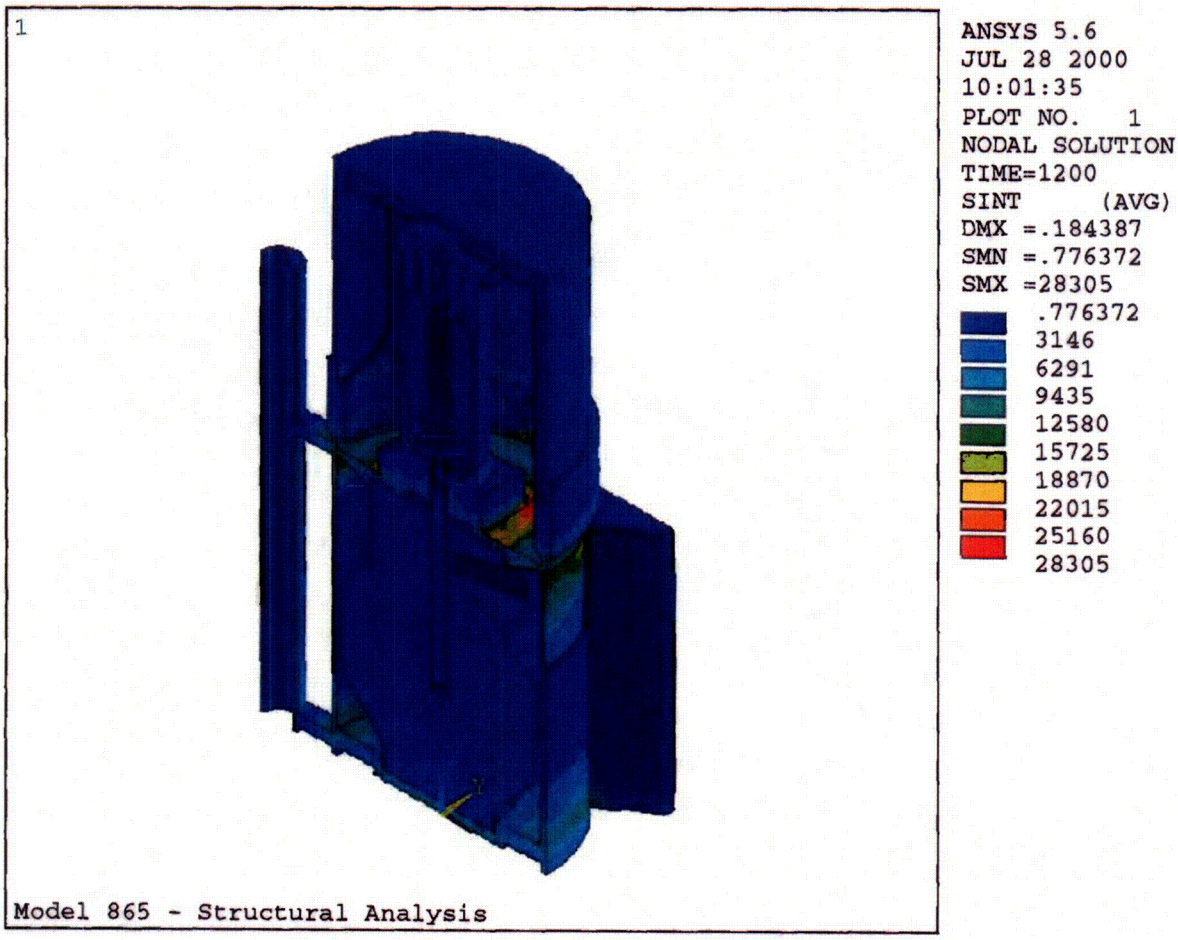

Figure 22
Stress Intensity Profile at 20 Minutes

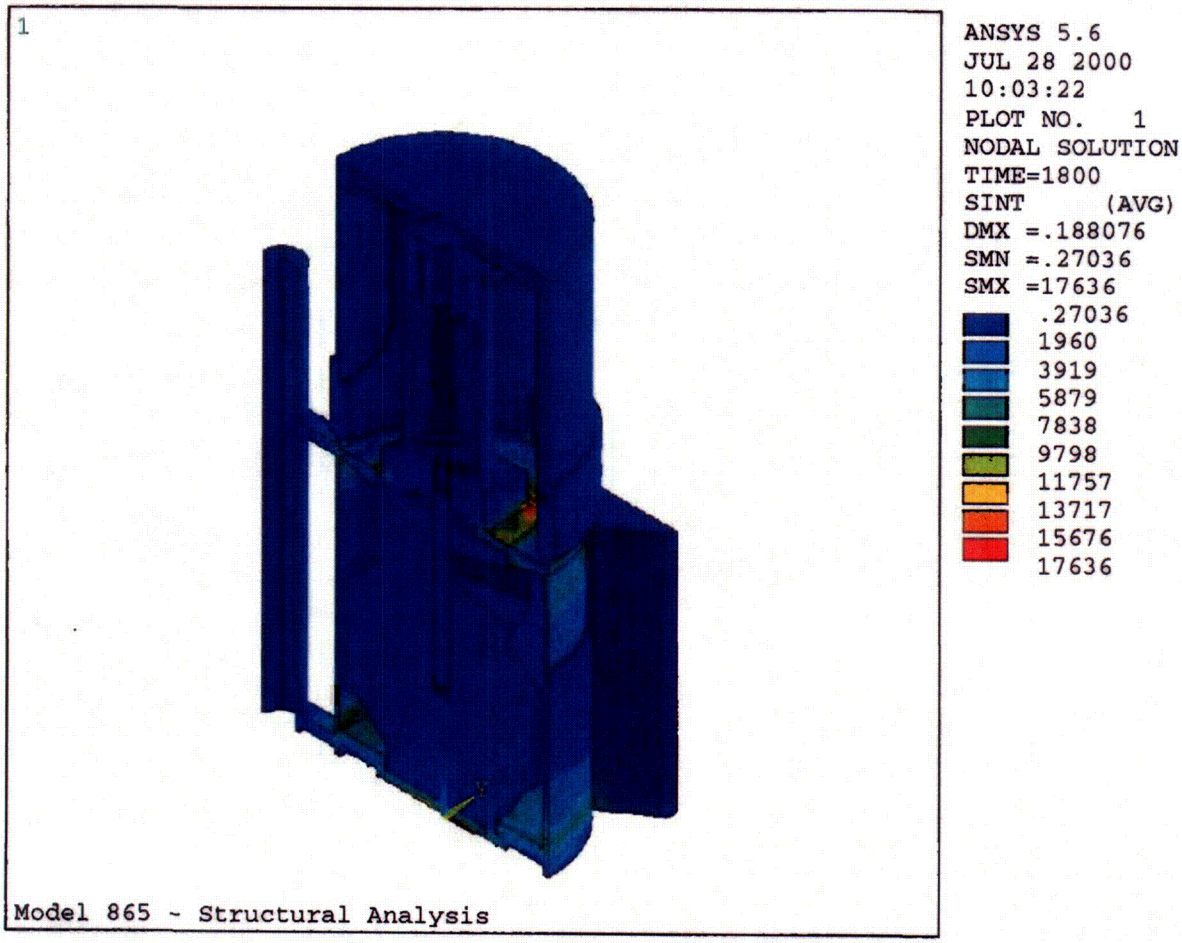

Figure 23
Stress Intensity Profile at 30 Minutes

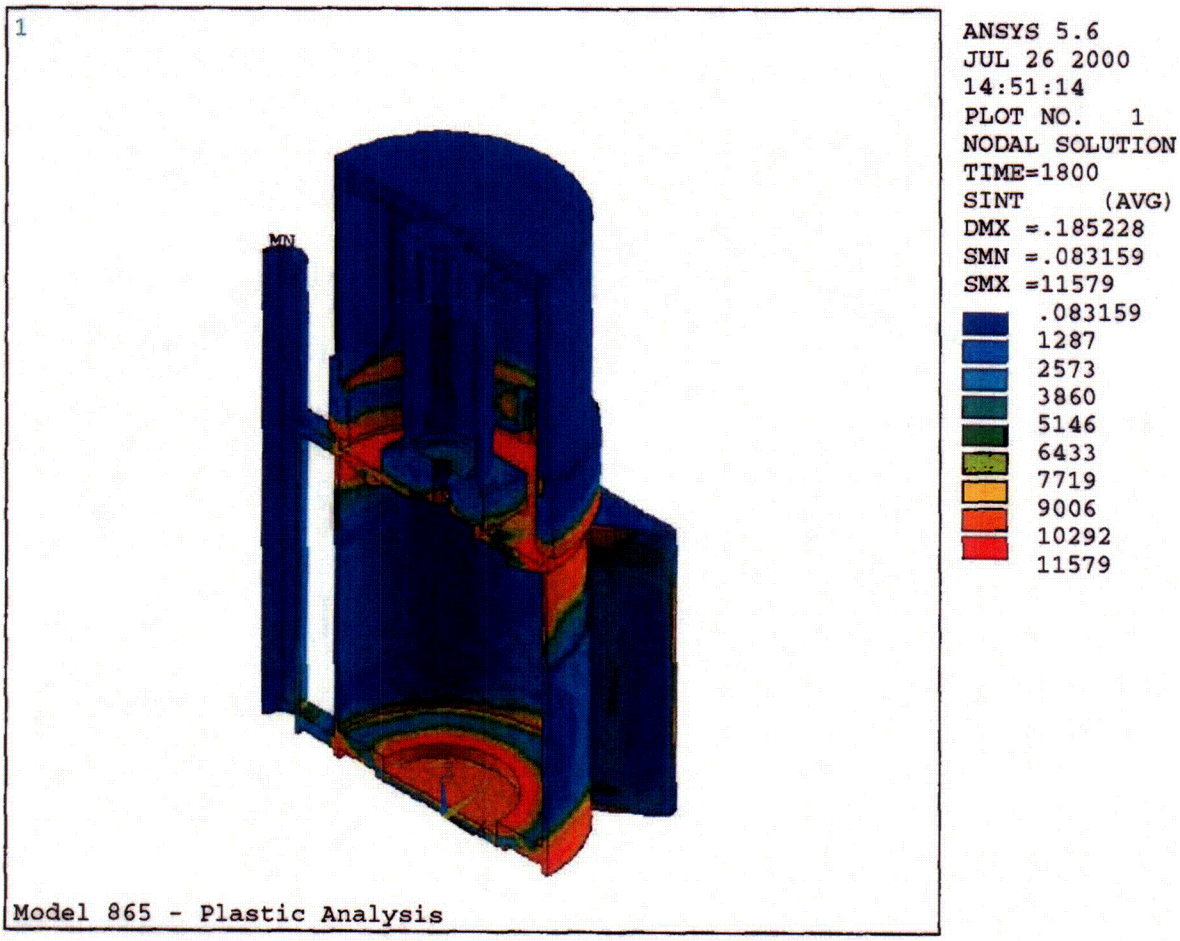

Figure 24
Stress Intensity Profile at 30 Minutes – Elastic Plastic

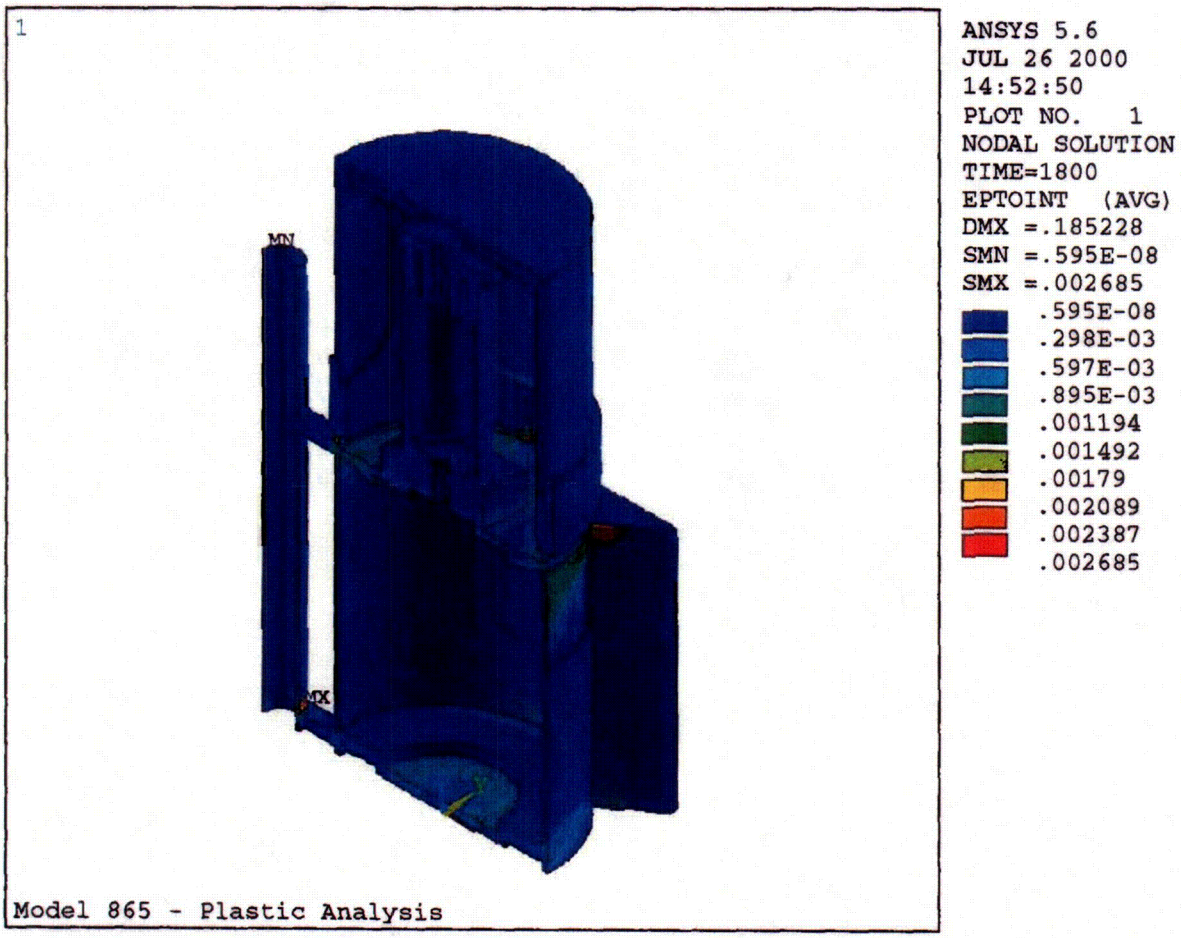

Figure 25
Strain Profile at 30 Minutes – Elastic Plastic

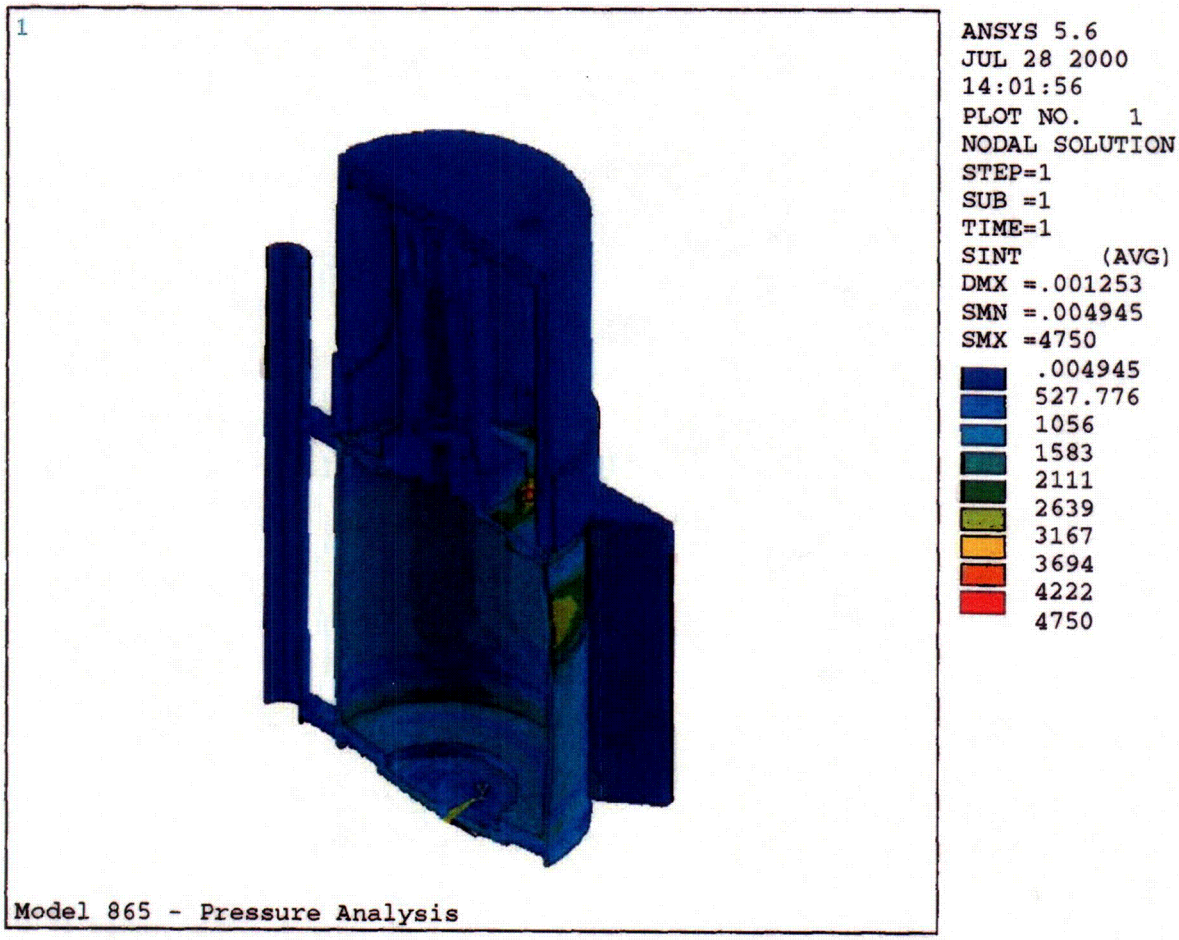

Figure 26
Stress Intensity Profile due to Pressure Load – Elastic

ATTACHMENT 1

Geometric Keypoint Coordinates

```
LIST ALL SELECTED KEYPOINTS.   DSYS=   0

***** ANSYS - ENGINEERING ANALYSIS SYSTEM  RELEASE 5.6      *****
ANSYS/Multiphysics
00040197          VERSION=SOLARIS64     16:22:33  JUL 25, 2000 CP=     22.960

Model 865
```

NO.	X,Y,Z LOCATION			KESIZE	NODE	ELEM	MAT	REAL	TYP	ESYS
1	2.50	0.	0.	0.	11286	0	0	0	0	0
2	2.38	0.	0.	0.	10243	0	0	0	0	0
3	-2.38	0.291E-15	0.	0.	10244	0	0	0	0	0
4	-2.50	0.306E-15	0.	0.	11373	0	0	0	0	0
5	2.50	0.	7.12	0.	43199	0	0	0	0	0
6	-2.50	0.306E-15	7.12	0.	43161	0	0	0	0	0
7	-2.38	0.291E-15	7.12	0.	42835	0	0	0	0	0
8	2.38	0.	7.12	0.	42575	0	0	0	0	0
9	2.50	0.	6.56	0.	11323	0	0	0	0	0
10	2.38	0.	6.56	0.	11215	0	0	0	0	0
11	-2.38	0.291E-15	6.56	0.	11184	0	0	0	0	0
12	-2.50	0.306E-15	6.56	0.	11504	0	0	0	0	0
13	2.50	0.	4.22	0.	11287	0	0	0	0	0
14	2.44	0.	4.22	0.	11309	0	0	0	0	0
15	2.00	1.40	4.22	0.	13193	0	0	0	0	0
16	2.05	1.43	4.22	0.	11556	0	0	0	0	0
17	2.50	0.	6.22	0.	11321	0	0	0	0	0
18	2.05	1.43	6.22	0.	11548	0	0	0	0	0
19	2.00	1.40	6.22	0.	13217	0	0	0	0	0
20	2.44	0.	6.22	0.	11311	0	0	0	0	0

NO.	X,Y,Z LOCATION			KESIZE	NODE	ELEM	MAT	REAL	TYP	ESYS
21	1.69	0.	5.94	0.	6115	0	0	0	0	0
22	0.	0.	0.435E-01	0.	8799	0	0	0	0	0
23	1.50	0.	0.435E-01	0.	9320	0	0	0	0	0
24	2.38	0.	6.19	0.	6349	0	0	0	0	0
25	-2.38	0.291E-15	6.19	0.	6556	0	0	0	0	0
26	1.56	0.	5.94	0.	5	0	0	0	0	0
27	0.750	0.	6.13	0.	319	0	0	0	0	0
28	-0.750	0.918E-16	6.13	0.	400	0	0	0	0	0
29	-0.280	2.48	7.12	0.	43187	0	0	0	0	0
30	-0.280	2.36	7.12	0.	43882	0	0	0	0	0
31	-0.280	2.36	6.56	0.	10230	0	0	0	0	0
32	-0.280	2.48	6.56	0.	10231	0	0	0	0	0
33	0.720	2.39	7.12	0.	43189	0	0	0	0	0
34	0.720	2.27	7.12	0.	44154	0	0	0	0	0
35	0.720	2.39	6.56	0.	11531	0	0	0	0	0
36	0.720	2.27	6.56	0.	11211	0	0	0	0	0
37	-0.280	2.36	6.41	0.	10235	0	0	0	0	0
38	-0.280	2.48	6.41	0.	10233	0	0	0	0	0
39	0.720	2.39	6.41	0.	11525	0	0	0	0	0
40	0.720	2.27	6.41	0.	11205	0	0	0	0	0

NO.	X,Y,Z LOCATION			KESIZE	NODE	ELEM	MAT	REAL	TYP	ESYS
41	0.750	0.	6.31	0.	9987	0	0	0	0	0
42	2.38	0.	6.31	0.	9629	0	0	0	0	0
43	-2.38	0.291E-15	6.31	0.	9649	0	0	0	0	0
44	-1.50	0.184E-15	0.435E-01	0.	9321	0	0	0	0	0
45	1.50	0.	6.31	0.	9575	0	0	0	0	0
46	-1.50	0.184E-15	6.31	0.	9565	0	0	0	0	0
47	-1.56	0.192E-15	5.94	0.	50	0	0	0	0	0
48	-1.50	0.222E-15	6.19	0.	6494	0	0	0	0	0
49	1.50	0.	6.19	0.	6353	0	0	0	0	0
50	1.50	0.	0.263	0.	8247	0	0	0	0	0
51	1.56	0.	6.13	0.	6360	0	0	0	0	0

52	-1.56	0.192E-15	6.13	0.	6386	0	0	0	0	0
53	-1.69	0.207E-15	5.94	0.	6117	0	0	0	0	0
54	-1.50	0.222E-15	6.13	0.	401	0	0	0	0	0
55	1.50	0.	6.13	0.	310	0	0	0	0	0
56	-0.750	0.918E-16	6.31	0.	9985	0	0	0	0	0
57	1.69	0.	6.10	0.	6185	0	0	0	0	0
58	0.750	0.	6.19	0.	7892	0	0	0	0	0
59	-0.750	0.222E-15	6.19	0.	7890	0	0	0	0	0
60	-1.69	0.207E-15	6.10	0.	6186	0	0	0	0	0

NO.	X,Y,Z LOCATION			KESIZE	NODE	ELEM	MAT	REAL	TYP	ESYS
61	-1.56	0.192E-15	6.10	0.	59	0	0	0	0	0
62	1.56	0.	6.10	0.	14	0	0	0	0	0
63	-1.50	0.184E-15	0.263	0.	8394	0	0	0	0	0
64	0.	0.	0.263	0.	77	0	0	0	0	0
65	0.	0.	0.292	0.	87	0	0	0	0	0
66	1.25	0.	0.435E-01	0.	8800	0	0	0	0	0
67	-1.25	0.153E-15	0.435E-01	0.	8808	0	0	0	0	0
68	1.25	0.	0.263	0.	95	0	0	0	0	0
69	-1.25	0.153E-15	0.263	0.	199	0	0	0	0	0
70	1.25	0.	0.292	0.	96	0	0	0	0	0
71	2.38	0.	0.169	0.	8161	0	0	0	0	0
72	1.31	0.	0.169	0.	9167	0	0	0	0	0
73	-1.31	0.161E-15	0.169	0.	9169	0	0	0	0	0
74	-2.38	0.291E-15	0.169	0.	8159	0	0	0	0	0
75	2.38	0.	0.543	0.	7287	0	0	0	0	0
76	-2.38	0.291E-15	0.543	0.	7307	0	0	0	0	0
77	-1.31	0.161E-15	0.543	0.	471	0	0	0	0	0
78	1.31	0.	0.543	0.	439	0	0	0	0	0
79	2.38	0.	0.292	0.	7016	0	0	0	0	0
80	1.31	0.	0.292	0.	447	0	0	0	0	0

NO.	X,Y,Z LOCATION			KESIZE	NODE	ELEM	MAT	REAL	TYP	ESYS
81	-1.31	0.161E-15	0.292	0.	463	0	0	0	0	0
82	-2.38	0.291E-15	0.292	0.	7022	0	0	0	0	0
83	-1.25	0.153E-15	0.292	0.	251	0	0	0	0	0
84	1.25	0.	1.76	0.	929	0	0	0	0	0
85	-1.25	0.153E-15	1.76	0.	969	0	0	0	0	0
86	0.750	0.	4.83	0.	534	0	0	0	0	0
87	1.31	0.	0.263	0.	8245	0	0	0	0	0
88	-1.31	0.161E-15	0.263	0.	8396	0	0	0	0	0
89	1.50	0.	0.169	0.	8249	0	0	0	0	0
90	-1.50	0.184E-15	0.169	0.	8275	0	0	0	0	0
91	0.189	0.	2.47	0.	2917	0	0	0	0	0
92	1.50	0.	3.70	0.	2260	0	0	0	0	0
93	-1.50	0.184E-15	3.70	0.	2261	0	0	0	0	0
94	1.25	0.	0.543	0.	455	0	0	0	0	0
95	-1.25	0.153E-15	0.543	0.	479	0	0	0	0	0
96	0.	0.	0.543	0.	1513	0	0	0	0	0
97	0.	0.	0.792	0.	866	0	0	0	0	0
98	1.25	0.	0.792	0.	867	0	0	0	0	0
99	-1.25	0.153E-15	0.792	0.	873	0	0	0	0	0
100	-0.189	0.231E-16	2.47	0.	2915	0	0	0	0	0

NO.	X,Y,Z LOCATION			KESIZE	NODE	ELEM	MAT	REAL	TYP	ESYS
101	0.139E-16	0.189	2.47	0.	2914	0	0	0	0	0
102	1.50	0.	6.10	0.	23	0	0	0	0	0
103	-1.50	0.184E-15	6.10	0.	68	0	0	0	0	0
104	1.50	0.	4.63	0.	4307	0	0	0	0	0
105	0.	0.	1.76	0.	933	0	0	0	0	0
106	0.750	0.	3.70	0.	1954	0	0	0	0	0
107	-0.750	0.918E-16	3.70	0.	1950	0	0	0	0	0
108	2.22	0.	1.76	0.	1180	0	0	0	0	0
109	-2.22	0.272E-15	1.76	0.	1174	0	0	0	0	0
110	2.22	0.	3.70	0.	2369	0	0	0	0	0
111	-0.750	0.918E-16	6.10	0.	373	0	0	0	0	0

112	0.750	0.	6.10	0.	322	0	0	0	0	0
113	0.189	0.	4.98	0.	631	0	0	0	0	0
114	1.50	0.	5.94	0.	24	0	0	0	0	0
115	-1.50	0.184E-15	5.94	0.	41	0	0	0	0	0
116	-2.22	0.272E-15	3.70	0.	2390	0	0	0	0	0
117	1.50	0.	5.81	0.	4216	0	0	0	0	0
118	0.189	0.	6.10	0.	2648	0	0	0	0	0
119	0.139E-16	0.189	6.10	0.	2646	0	0	0	0	0
120	-0.189	0.231E-16	6.10	0.	2644	0	0	0	0	0

NO.	X,Y,Z LOCATION			KESIZE	NODE	ELEM	MAT	REAL	TYP	ESYS
121	0.750	0.	5.61	0.	494	0	0	0	0	0
122	1.50	0.	4.42	0.	2285	0	0	0	0	0
123	-1.50	0.184E-15	4.42	0.	2281	0	0	0	0	0
124	0.189	0.	5.46	0.	492	0	0	0	0	0
125	-0.750	0.	4.42	0.	510	0	0	0	0	0
126	0.750	0.	4.42	0.	536	0	0	0	0	0
127	0.750	0.	5.94	0.	519	0	0	0	0	0
128	-0.750	0.	5.94	0.	511	0	0	0	0	0
129	0.189	0.	3.70	0.	1918	0	0	0	0	0
130	-0.189	0.231E-16	3.70	0.	1914	0	0	0	0	0
131	-0.189	0.	4.42	0.	600	0	0	0	0	0
132	0.189	0.	4.42	0.	604	0	0	0	0	0
133	-0.189	0.	5.94	0.	650	0	0	0	0	0
134	0.189	0.	5.94	0.	658	0	0	0	0	0
135	0.	0.	2.47	0.	2919	0	0	0	0	0
136	1.50	0.163E-01	4.63	0.	4323	0	0	0	0	0
137	1.30	0.750	4.68	0.	4325	0	0	0	0	0
138	1.50	0.163E-01	5.81	0.	4217	0	0	0	0	0
139	1.30	0.750	5.76	0.	4219	0	0	0	0	0
140	0.650	0.375	4.86	0.	530	0	0	0	0	0

NO.	X,Y,Z LOCATION			KESIZE	NODE	ELEM	MAT	REAL	TYP	ESYS
141	0.163	0.943E-01	4.99	0.	663	0	0	0	0	0
142	0.650	0.375	5.58	0.	487	0	0	0	0	0
143	0.163	0.943E-01	5.45	0.	488	0	0	0	0	0
144	2.20	0.	6.56	0.	27602	0	0	0	0	0
145	-2.20	0.269E-15	6.56	0.	27969	0	0	0	0	0
146	2.38	0.	7.69	0.	35619	0	0	0	0	0
147	-2.38	0.291E-15	7.69	0.	35620	0	0	0	0	0
148	-2.20	0.269E-15	7.69	0.	28422	0	0	0	0	0
149	2.20	0.	7.69	0.	28449	0	0	0	0	0
150	2.20	0.	7.12	0.	27620	0	0	0	0	0
151	-2.20	0.269E-15	7.12	0.	27991	0	0	0	0	0
152	2.50	0.	7.69	0.	32320	0	0	0	0	0
153	-2.50	0.306E-15	7.69	0.	32318	0	0	0	0	0
154	2.62	0.	6.56	0.	44400	0	0	0	0	0
155	1.50	0.	11.8	0.	26425	0	0	0	0	0
156	2.25	0.	6.56	0.	27706	0	0	0	0	0
157	-1.50	0.184E-15	11.8	0.	26483	0	0	0	0	0
158	0.111E-15	1.50	11.8	0.	26467	0	0	0	0	0
159	-2.25	0.276E-15	6.56	0.	28143	0	0	0	0	0
160	2.25	0.	12.0	0.	31929	0	0	0	0	0

NO.	X,Y,Z LOCATION			KESIZE	NODE	ELEM	MAT	REAL	TYP	ESYS
161	-2.25	0.276E-15	12.0	0.	31927	0	0	0	0	0
162	-2.20	0.269E-15	12.0	0.	26545	0	0	0	0	0
163	2.20	0.	12.0	0.	26432	0	0	0	0	0
164	2.25	0.	11.8	0.	29555	0	0	0	0	0
165	-2.25	0.276E-15	11.8	0.	29553	0	0	0	0	0
166	1.50	0.	11.9	0.	26227	0	0	0	0	0
167	0.111E-15	1.50	11.9	0.	26228	0	0	0	0	0
168	2.20	0.	11.8	0.	26426	0	0	0	0	0
169	-2.20	0.222E-15	11.8	0.	26539	0	0	0	0	0
170	2.25	0.	7.12	0.	27704	0	0	0	0	0
171	-2.25	0.222E-15	7.12	0.	28091	0	0	0	0	0

172	2.25	0.	7.69	0.	29424	0	0	0	0	0
173	-2.25	0.222E-15	7.69	0.	29422	0	0	0	0	0
174	-1.50	0.184E-15	11.9	0.	26244	0	0	0	0	0
175	-2.62	0.321E-15	6.56	0.	44409	0	0	0	0	0
176	0.845	2.03	6.56	0.	27579	0	0	0	0	0
177	0.845	2.03	7.12	0.	27586	0	0	0	0	0
178	0.845	2.09	6.56	0.	27580	0	0	0	0	0
179	0.845	2.09	7.12	0.	27582	0	0	0	0	0
180	-0.405	2.16	6.56	0.	27953	0	0	0	0	0

NO.	X,Y,Z LOCATION			KESIZE	NODE	ELEM	MAT	REAL	TYP	ESYS
181	-0.405	2.16	7.12	0.	27946	0	0	0	0	0
182	-0.405	2.21	6.56	0.	27949	0	0	0	0	0
183	-0.405	2.21	7.12	0.	27947	0	0	0	0	0
184	0.845	2.22	6.56	0.	11213	0	0	0	0	0
185	0.845	2.22	7.12	0.	42559	0	0	0	0	0
186	-0.405	2.35	6.56	0.	11186	0	0	0	0	0
187	-0.405	2.35	7.12	0.	42818	0	0	0	0	0
188	0.845	2.35	7.12	0.	43197	0	0	0	0	0
189	-0.405	2.47	7.12	0.	43163	0	0	0	0	0
190	0.845	2.22	7.56	0.	44925	0	0	0	0	0
191	0.845	2.35	7.56	0.	43306	0	0	0	0	0
192	-0.405	2.35	7.56	0.	44895	0	0	0	0	0
193	-0.405	2.47	7.56	0.	43310	0	0	0	0	0
194	0.845	2.09	7.56	0.	34912	0	0	0	0	0
195	-0.405	2.21	7.56	0.	34717	0	0	0	0	0
196	0.845	2.03	7.56	0.	34743	0	0	0	0	0
197	-0.405	2.16	7.56	0.	34718	0	0	0	0	0
198	2.62	0.	8.06	0.	32437	0	0	0	0	0
199	-2.62	0.321E-15	8.06	0.	32577	0	0	0	0	0
200	-2.25	0.536E-16	7.81	0.	29528	0	0	0	0	0

NO.	X,Y,Z LOCATION			KESIZE	NODE	ELEM	MAT	REAL	TYP	ESYS
201	-2.50	0.306E-15	8.06	0.	32457	0	0	0	0	0
202	0.500	0.	12.0	0.	26189	0	0	0	0	0
203	0.278E-16	0.500	12.0	0.	26183	0	0	0	0	0
204	-0.500	0.612E-16	12.0	0.	26180	0	0	0	0	0
205	2.50	0.	8.06	0.	32441	0	0	0	0	0
206	-0.500	0.296E-15	11.9	0.	26181	0	0	0	0	0
207	0.500	0.518E-15	11.9	0.	26195	0	0	0	0	0
208	-2.25	0.536E-16	11.7	0.	28384	0	0	0	0	0
209	2.62	0.	7.12	0.	43104	0	0	0	0	0
210	-2.62	0.321E-15	7.12	0.	43105	0	0	0	0	0
211	-2.20	0.222E-15	11.7	0.	28394	0	0	0	0	0
212	-2.20	0.222E-15	7.81	0.	28423	0	0	0	0	0
213	-2.07	0.875	8.69	0.	29530	0	0	0	0	0
214	-2.02	0.875	8.69	0.	28425	0	0	0	0	0
215	-2.07	0.875	10.8	0.	28381	0	0	0	0	0
216	-2.02	0.875	10.8	0.	28382	0	0	0	0	0
217	-1.44	1.00	6.31	0.	9692	0	0	0	0	0
218	-1.44	0.	6.31	0.	10079	0	0	0	0	0
219	-2.38	0.291E-15	12.2	0.	33311	0	0	0	0	0
220	2.38	0.	12.2	0.	33313	0	0	0	0	0

NO.	X,Y,Z LOCATION			KESIZE	NODE	ELEM	MAT	REAL	TYP	ESYS
221	2.62	0.	7.69	0.	32261	0	0	0	0	0
222	-2.62	0.321E-15	7.69	0.	32262	0	0	0	0	0
223	0.	0.	12.1	0.	32855	0	0	0	0	0
224	2.50	0.	12.1	0.	34327	0	0	0	0	0
225	-2.50	0.306E-15	12.1	0.	34325	0	0	0	0	0
226	2.50	0.	12.2	0.	34441	0	0	0	0	0
227	-2.50	0.306E-15	12.2	0.	34449	0	0	0	0	0
228	0.	0.	12.2	0.	33421	0	0	0	0	0
229	2.38	0.	12.1	0.	32856	0	0	0	0	0
230	-2.38	0.222E-15	12.1	0.	32872	0	0	0	0	0
231	1.00	1.00	6.31	0.	10036	0	0	0	0	0

232	1.00	0.	6.31	0.	10019	0	0	0	0	0
233	0.875	0.	7.04	0.	39568	0	0	0	0	0
234	1.00	0.	7.04	0.	39562	0	0	0	0	0
235	1.00	1.00	7.04	0.	39611	0	0	0	0	0

ATTACHMENT 2

Material Property Listing

```
LIST MATERIALS        1 TO        4 BY        1
 PROPERTY= ALL

PROPERTY TABLE EX     MAT=        1  NUM. POINTS= 17
  TEMPERATURE      DATA     TEMPERATURE      DATA     TEMPERATURE      DATA
    70.000      0.28120E+08  200.00      0.27620E+08  300.00      0.27160E+08
    400.00      0.26640E+08  500.00      0.26070E+08  600.00      0.25440E+08
    700.00      0.24770E+08  800.00      0.24060E+08  900.00      0.23310E+08
    1000.0      0.22530E+08  1100.0      0.21720E+08  1200.0      0.20890E+08
    1300.0      0.20030E+08  1400.0      0.19170E+08  1500.0      0.18300E+08
    1600.0      0.17420E+08  1700.0      0.16540E+08

PROPERTY TABLE NUXY   MAT=        1  NUM. POINTS= 17
  TEMPERATURE      DATA     TEMPERATURE      DATA     TEMPERATURE      DATA
    70.000      0.26390      200.00      0.27110      300.00      0.27610
    400.00      0.28080      500.00      0.28510      600.00      0.28920
    700.00      0.29310      800.00      0.29700      900.00      0.30080
    1000.0      0.30460      1100.0      0.30860      1200.0      0.31270
    1300.0      0.31710      1400.0      0.32170      1500.0      0.32680
    1600.0      0.33240      1700.0      0.33840

PROPERTY TABLE ALPX   MAT=        1  NUM. POINTS= 17
  TEMPERATURE      DATA     TEMPERATURE      DATA     TEMPERATURE      DATA
    70.000      0.84810E-05  200.00      0.87860E-05  300.00      0.89980E-05
    400.00      0.91930E-05  500.00      0.93710E-05  600.00      0.95340E-05
    700.00      0.96840E-05  800.00      0.98230E-05  900.00      0.99510E-05
    1000.0      0.10070E-04  1100.0      0.10180E-04  1200.0      0.10290E-04
    1300.0      0.10390E-04  1400.0      0.10490E-04  1500.0      0.10590E-04
    1600.0      0.10690E-04  1700.0      0.10790E-04

PROPERTY TABLE DENS   MAT=        1  NUM. POINTS= 17
  TEMPERATURE      DATA     TEMPERATURE      DATA     TEMPERATURE      DATA
    70.000      0.29020      200.00      0.28900      300.00      0.28800
    400.00      0.28710      500.00      0.28620      600.00      0.28530
    700.00      0.28430      800.00      0.28340      900.00      0.28250
    1000.0      0.28150      1100.0      0.28060      1200.0      0.27970
    1300.0      0.27880      1400.0      0.27780      1500.0      0.27690
    1600.0      0.27600      1700.0      0.27500

PROPERTY TABLE KXX    MAT=        1  NUM. POINTS= 17
  TEMPERATURE      DATA     TEMPERATURE      DATA     TEMPERATURE      DATA
    70.000      0.19840E-03  200.00      0.21520E-03  300.00      0.22750E-03
    400.00      0.23950E-03  500.00      0.25110E-03  600.00      0.26240E-03
    700.00      0.27330E-03  800.00      0.28400E-03  900.00      0.29450E-03
    1000.0      0.30480E-03  1100.0      0.31490E-03  1200.0      0.32480E-03
    1300.0      0.33470E-03  1400.0      0.34450E-03  1500.0      0.35430E-03
    1600.0      0.36410E-03  1700.0      0.37390E-03

PROPERTY TABLE C      MAT=        1  NUM. POINTS= 17
  TEMPERATURE      DATA     TEMPERATURE      DATA     TEMPERATURE      DATA
    70.000      0.11410      200.00      0.12020      300.00      0.12410
    400.00      0.12740      500.00      0.13020      600.00      0.13260
    700.00      0.13470      800.00      0.13640      900.00      0.13800
    1000.0      0.13950      1100.0      0.14100      1200.0      0.14260
    1300.0      0.14430      1400.0      0.14620      1500.0      0.14850
    1600.0      0.15110      1700.0      0.15420

PROPERTY TABLE EMIS   MAT=        1  NUM. POINTS= 17
  TEMPERATURE      DATA     TEMPERATURE      DATA     TEMPERATURE      DATA
    70.000      1.0000       200.00      1.0000       300.00      1.0000
    400.00      1.0000       500.00      1.0000       600.00      1.0000
    700.00      1.0000       800.00      1.0000       900.00      1.0000
    1000.0      1.0000       1100.0      1.0000       1200.0      1.0000
    1300.0      1.0000       1400.0      1.0000       1500.0      1.0000
    1600.0      1.0000       1700.0      1.0000
```

PROPERTY TABLE REFT MAT= 1 NUM. POINTS= 17

TEMPERATURE	DATA	TEMPERATURE	DATA	TEMPERATURE	DATA
70.000	70.000	200.00	70.000	300.00	70.000
400.00	70.000	500.00	70.000	600.00	70.000
700.00	70.000	800.00	70.000	900.00	70.000
1000.0	70.000	1100.0	70.000	1200.0	70.000
1300.0	70.000	1400.0	70.000	1500.0	70.000
1600.0	70.000	1700.0	70.000		

PROPERTY TABLE EX MAT= 2 NUM. POINTS= 12

TEMPERATURE	DATA	TEMPERATURE	DATA	TEMPERATURE	DATA
77.000	0.29500E+08	212.00	0.26100E+08	392.00	0.22200E+08
572.00	0.18600E+08	752.00	0.14300E+08	932.00	0.10100E+08
1112.0	0.57800E+07	1220.0	0.33700E+07	1231.0	0.57800E+07
1292.0	0.50600E+07	1429.0	0.83900E+06	1472.0	0.83900E+06

PROPERTY TABLE NUXY MAT= 2 NUM. POINTS= 17

TEMPERATURE	DATA	TEMPERATURE	DATA	TEMPERATURE	DATA
70.000	0.22000	200.00	0.22000	300.00	0.22000
400.00	0.22000	500.00	0.22000	600.00	0.22000
700.00	0.22000	800.00	0.22000	900.00	0.22000
1000.0	0.22000	1100.0	0.22000	1200.0	0.22000
1300.0	0.22000	1400.0	0.22000	1500.0	0.22000
1600.0	0.22000	1700.0	0.22000		

PROPERTY TABLE ALPX MAT= 2 NUM. POINTS= 5

TEMPERATURE	DATA	TEMPERATURE	DATA	TEMPERATURE	DATA
77.000	0.66700E-05	1161.0	0.15600E-04	1341.0	0.15600E-04
1656.0	0.11100E-04	2061.0	0.11100E-04		

PROPERTY TABLE DENS MAT= 2 NUM. POINTS= 17

TEMPERATURE	DATA	TEMPERATURE	DATA	TEMPERATURE	DATA
70.000	0.68910	200.00	0.68680	300.00	0.68500
400.00	0.68320	500.00	0.68130	600.00	0.67920
700.00	0.67690	800.00	0.67460	900.00	0.67210
1000.0	0.66930	1100.0	0.66490	1200.0	0.66050
1300.0	0.65600	1400.0	0.65220	1500.0	0.64860
1600.0	0.64520	1700.0	0.64160		

PROPERTY TABLE KXX MAT= 2 NUM. POINTS= 17

TEMPERATURE	DATA	TEMPERATURE	DATA	TEMPERATURE	DATA
70.000	0.35710E-03	200.00	0.40210E-03	300.00	0.41600E-03
400.00	0.43340E-03	500.00	0.45130E-03	600.00	0.47010E-03
700.00	0.49320E-03	800.00	0.51780E-03	900.00	0.54180E-03
1000.0	0.56120E-03	1100.0	0.56110E-03	1200.0	0.60400E-03
1300.0	0.60370E-03	1400.0	0.60390E-03	1500.0	0.60450E-03
1600.0	0.60490E-03	1700.0	0.60530E-03		

PROPERTY TABLE C MAT= 2 NUM. POINTS= 17

TEMPERATURE	DATA	TEMPERATURE	DATA	TEMPERATURE	DATA
70.000	0.27900E-01	200.00	0.29100E-01	300.00	0.30100E-01
400.00	0.31500E-01	500.00	0.32900E-01	600.00	0.34300E-01
700.00	0.36200E-01	800.00	0.38100E-01	900.00	0.40000E-01
1000.0	0.41600E-01	1100.0	0.41900E-01	1200.0	0.42100E-01
1300.0	0.42400E-01	1400.0	0.42700E-01	1500.0	0.42900E-01
1600.0	0.43200E-01	1700.0	0.43500E-01		

PROPERTY TABLE EMIS MAT= 2 NUM. POINTS= 17

TEMPERATURE	DATA	TEMPERATURE	DATA	TEMPERATURE	DATA
70.000	1.0000	200.00	1.0000	300.00	1.0000
400.00	1.0000	500.00	1.0000	600.00	1.0000
700.00	1.0000	800.00	1.0000	900.00	1.0000
1000.0	1.0000	1100.0	1.0000	1200.0	1.0000
1300.0	1.0000	1400.0	1.0000	1500.0	1.0000
1600.0	1.0000	1700.0	1.0000		

PROPERTY TABLE REFT MAT= 2 NUM. POINTS= 17

TEMPERATURE	DATA	TEMPERATURE	DATA	TEMPERATURE	DATA
70.000	70.000	200.00	70.000	300.00	70.000
400.00	70.000	500.00	70.000	600.00	70.000
700.00	70.000	800.00	70.000	900.00	70.000
1000.0	70.000	1100.0	70.000	1200.0	70.000
1300.0	70.000	1400.0	70.000	1500.0	70.000
1600.0	70.000	1700.0	70.000		

PROPERTY TABLE EX MAT= 3 NUM. POINTS= 17

TEMPERATURE	DATA	TEMPERATURE	DATA	TEMPERATURE	DATA
70.000	1000.0	200.00	1000.0	300.00	1000.0
400.00	1000.0	500.00	1000.0	600.00	1000.0
700.00	1000.0	800.00	1000.0	900.00	1000.0
1000.0	1000.0	1100.0	1000.0	1200.0	1000.0
1300.0	1000.0	1400.0	1000.0	1500.0	1000.0
1600.0	1000.0	1700.0	1000.0		

PROPERTY TABLE NUXY MAT= 3 NUM. POINTS= 17

TEMPERATURE	DATA	TEMPERATURE	DATA	TEMPERATURE	DATA
70.000	0.30000	200.00	0.30000	300.00	0.30000
400.00	0.30000	500.00	0.30000	600.00	0.30000
700.00	0.30000	800.00	0.30000	900.00	0.30000
1000.0	0.30000	1100.0	0.30000	1200.0	0.30000
1300.0	0.30000	1400.0	0.30000	1500.0	0.30000
1600.0	0.30000	1700.0	0.30000		

PROPERTY TABLE ALPX MAT= 3 NUM. POINTS= 17

TEMPERATURE	DATA	TEMPERATURE	DATA	TEMPERATURE	DATA
70.000	0.11300E-04	200.00	0.11300E-04	300.00	0.11300E-04
400.00	0.11300E-04	500.00	0.11300E-04	600.00	0.11300E-04
700.00	0.11300E-04	800.00	0.11300E-04	900.00	0.11300E-04
1000.0	0.11300E-04	1100.0	0.11300E-04	1200.0	0.11300E-04
1300.0	0.11300E-04	1400.0	0.11300E-04	1500.0	0.11300E-04
1600.0	0.11300E-04	1700.0	0.11300E-04		

PROPERTY TABLE DENS MAT= 3 NUM. POINTS= 17

TEMPERATURE	DATA	TEMPERATURE	DATA	TEMPERATURE	DATA
70.000	0.30600	200.00	0.30600	300.00	0.30600
400.00	0.30600	500.00	0.30600	600.00	0.30600
700.00	0.30600	800.00	0.30600	900.00	0.30600
1000.0	0.30600	1100.0	0.30600	1200.0	0.30600
1300.0	0.30600	1400.0	0.30600	1500.0	0.30600
1600.0	0.30600	1700.0	0.30600		

PROPERTY TABLE KXX MAT= 3 NUM. POINTS= 17

TEMPERATURE	DATA	TEMPERATURE	DATA	TEMPERATURE	DATA
70.000	0.15509E-02	200.00	0.15509E-02	300.00	0.15509E-02
400.00	0.15509E-02	500.00	0.15509E-02	600.00	0.15509E-02
700.00	0.15509E-02	800.00	0.15509E-02	900.00	0.15509E-02
1000.0	0.15509E-02	1100.0	0.15509E-02	1200.0	0.15509E-02
1300.0	0.15509E-02	1400.0	0.15509E-02	1500.0	0.15509E-02
1600.0	0.15509E-02	1700.0	0.15509E-02		

PROPERTY TABLE C MAT= 3 NUM. POINTS= 17

TEMPERATURE	DATA	TEMPERATURE	DATA	TEMPERATURE	DATA
70.000	0.90000E-01	200.00	0.90000E-01	300.00	0.90000E-01
400.00	0.90000E-01	500.00	0.90000E-01	600.00	0.90000E-01
700.00	0.90000E-01	800.00	0.90000E-01	900.00	0.90000E-01
1000.0	0.90000E-01	1100.0	0.90000E-01	1200.0	0.90000E-01
1300.0	0.90000E-01	1400.0	0.90000E-01	1500.0	0.90000E-01
1600.0	0.90000E-01	1700.0	0.90000E-01		

PROPERTY TABLE EMIS MAT= 3 NUM. POINTS= 17

TEMPERATURE	DATA	TEMPERATURE	DATA	TEMPERATURE	DATA

70.000	1.0000	200.00	1.0000	300.00	1.0000
400.00	1.0000	500.00	1.0000	600.00	1.0000
700.00	1.0000	800.00	1.0000	900.00	1.0000
1000.0	1.0000	1100.0	1.0000	1200.0	1.0000
1300.0	1.0000	1400.0	1.0000	1500.0	1.0000
1600.0	1.0000	1700.0	1.0000		

PROPERTY TABLE REFT MAT= 3 NUM. POINTS= 17

TEMPERATURE	DATA	TEMPERATURE	DATA	TEMPERATURE	DATA
70.000	70.000	200.00	70.000	300.00	70.000
400.00	70.000	500.00	70.000	600.00	70.000
700.00	70.000	800.00	70.000	900.00	70.000
1000.0	70.000	1100.0	70.000	1200.0	70.000
1300.0	70.000	1400.0	70.000	1500.0	70.000
1600.0	70.000	1700.0	70.000		

PROPERTY TABLE EX MAT= 4 NUM. POINTS= 4

TEMPERATURE	DATA	TEMPERATURE	DATA	TEMPERATURE	DATA
32.000	0.59470E+08	752.00	0.57430E+08	1472.0	0.54820E+08
2192.0	0.51920E+08				

PROPERTY TABLE NUXY MAT= 4 NUM. POINTS= 4

TEMPERATURE	DATA	TEMPERATURE	DATA	TEMPERATURE	DATA
32.000	0.28000	752.00	0.28300	1472.0	0.28750
2192.0	0.29500				

PROPERTY TABLE ALPX MAT= 4 NUM. POINTS= 4

TEMPERATURE	DATA	TEMPERATURE	DATA	TEMPERATURE	DATA
32.000	0.24444E-05	752.00	0.24444E-05	1472.0	0.24444E-05
2192.0	0.24444E-05				

PROPERTY TABLE DENS MAT= 4 NUM. POINTS= 7

TEMPERATURE	DATA	TEMPERATURE	DATA	TEMPERATURE	DATA
80.330	0.69620	260.33	0.69510	440.33	0.69440
620.33	0.69330	980.33	0.69110	1340.3	0.68930
1700.3	0.68710				

PROPERTY TABLE KXX MAT= 4 NUM. POINTS= 7

TEMPERATURE	DATA	TEMPERATURE	DATA	TEMPERATURE	DATA
32.000	0.22243E-02	212.00	0.20221E-02	932.00	0.16021E-02
1832.0	0.13221E-02	2732.0	0.15243E-02	3632.0	0.18199E-02
4352.0	0.19599E-02				

PROPERTY TABLE C MAT= 4 NUM. POINTS= 6

TEMPERATURE	DATA	TEMPERATURE	DATA	TEMPERATURE	DATA
80.330	0.32200E-01	260.33	0.32720E-01	440.33	0.33190E-01
620.33	0.33440E-01	980.33	0.34390E-01	1340.3	0.35350E-01

PROPERTY TABLE EMIS MAT= 4 NUM. POINTS= 4

TEMPERATURE	DATA	TEMPERATURE	DATA	TEMPERATURE	DATA
32.000	1.0000	752.00	1.0000	1472.0	1.0000
2192.0	1.0000				

PROPERTY TABLE REFT MAT= 4 NUM. POINTS= 4

TEMPERATURE	DATA	TEMPERATURE	DATA	TEMPERATURE	DATA
32.000	70.000	752.00	70.000	1472.0	70.000
2192.0	70.000				

Section 3 - THERMAL EVALUATION

3.1 Description of Thermal Design

(Reference:

- *USNRC, 10 CFR 71.33(a)(5)(v) and 71.33(b)(7)*
- *IAEA TS-R-1, paragraphs 651(b) and 655)*

The Model 865 transport package is a completely passive thermal device having no mechanical cooling system or relief valves. Cooling of the package is through free convection and radiation. There are no specific cooling or insulating design features. Pressure relief of the container is not necessary during the thermal test as the construction is not air tight and will allow venting to the atmosphere.

The maximum output activity for this package is 240 Ci of Ir-192. Accounting for source absorption, this equals a maximum content activity of 552 Ci of Ir-192. The corresponding decay heat generation rate for the content activity is approximately 4.8 Watts (See Table 1.2a). The thermal evaluations are based on the decay energy of Ir-192.

3.1.1 Design Features

The Model 865 transport package is described in Section 1. The containers use depleted uranium shielding. The depleted uranium is fully enclosed in the steel structure and endplates which are attached by welding. This construction prevents oxidation by severely limiting oxygen from reaching the depleted uranium shield.

3.1.2 Content's Decay Heat

From Table 1.2a, a maximum of 4.8 Watts of decay energy is available to be absorbed by the package.

3.1.3 Summary Tables of Temperatures

Table 3.1a: Summary Table of Temperatures

Surface Temperature Condition	Model 865 package	Comments
Insolation (38°C in full sun)	99.5°C (211°F	Section 3.4.1.1
Decay Heating (38°C in shade)	44°C (111°F)	Section 3.4.1.2
Fire Test During	800°C (1,472°F)	
Post-Fire (Maximum Temperature)	800°C (1,472°F)	

3.1.4 Summary Tables of Maximum Pressures

All Model 865 containers are vented to atmosphere. As such, no pressure will build up in the units under either Normal or Hypothetical Accident conditions.

Table 3.1b: Summary Table of Maximum Pressures

Package Configuration	Void Volume IN^3	Normal Conditions 99.5°C (211°F) Pressure Developed	Fire Conditions 800°C (1,472°F) Pressure Developed	Comments
865	0	0 psig	0 psig	

3.2 Material Properties and Component Specifications

3.2.1 Material Properties

Table 3.2a lists the relevant thermal properties of the important materials in the transport package. The sources referred to in the last column are listed below the table.

Table 3.2a: Thermal Properties of Principal Transport Package Materials

Material	Density (g/cm^3)	Melting/Combustion Temperature	Linear Expansion (μm/mK)	Source
Depleted Uranium	18.6	1,135°C (2,075°F)	12	Reference #1
Brass	8.3 – 8.75	900-1,025°C (1,652-1,877°F)	18.7 – 21.2	Reference #1
Stainless Steel-Type 304 Type 303	7.9	1,400-1,450°C (2,552-2,642°F)	17	Reference #1
Tungsten	19.3	3,410°C (6,170°F)	4.6	Reference #2
Bronze	7.7 – 8.89	980-1,050°C (1,796-1,922°F)	16.4 – 21.2	Reference #1

Operating temperature range of nitrile rubber 'O' rings is -40°F to +125°F.

Resource references:

1. Metals Handbook. American Society for Metals, 8th Edition.

2. Metals Handbook Desk Edition. American Society for Metals

3.2.2 Component Specifications

All components are specified and described on the drawings included in the Section 1.4.

3.3 General Considerations

3.3.1 Evaluation by Analysis

Evaluations by analysis are described in the section they apply to in this Safety Analysis Report or when applicable in the Test Plan contained in Section 2.12.

3.3.2 Evaluation by Test

Evaluations by direct testing are documented in the Test Plan contained in Section 2.12.

3.3.3 Margins of Safety

Margins of safety are discussed in each section as appropriate. All testing and analysis resulted in no loss of source containment or securement in the transport package. Though this demonstrates package compliance, it is difficult to quantify the margin related to these results. All physical testing used multiple specimens, with demonstrated results well within the regulatory requirements. Based on the results of the physical testing and the related analyses, we estimate the margin of safety for the Model 865 package as high.

3.4 Thermal Evaluation for Normal Conditions of Transport

3.4.1 Heat and Cold

3.4.1.1 Insolation and Decay Heat
(Reference:
- *USNRC, 10 CFR 71.71(c)(1)*
- *IAEA TS-R-1, paragraph 651)*

This analysis determines the maximum surface temperature produced by solar heating of the Model 865 transport package loaded at maximum activity in accordance with 10 CFR 71.71(c)(1) and IAEA TS-R-1. This will be compared to the Normal Transport test conditions temperature range to determine which is the most onerous for thermal stress considerations.

The model consists of taking a steady state heat balance over the surface of the transport package. The following design analysis calculates the steady state surface temperature of a cylindrical package subjected to insolation and self-heat. The analysis is based on recognized heat transfer theory and specifically, that the total heat input due to the self-heat of the radioactive contents and the insolation energy absorbed must balance the heat loss due to convection and emitted radiation from the package surface.

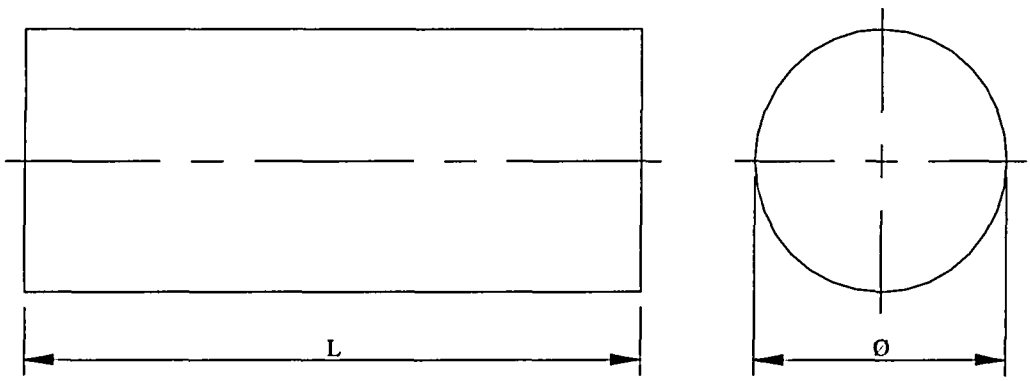

Figure 3.4a: Model of Cylindrical Package for Heat Analysis

The package is evaluated in the orientation shown in Figure 3.4a, which also defines the overall package dimensions. In order to assure conservatism, the following assumptions are made:

a. Basic Input Parameters:

Max Content Activity, A = 552 Ci of Ir-192
(240 Ci x 2.3 for self absorption)
The surface finish of the package is light silvery stainless steel
Length of Package, L = 0.311 m
Diameter of Package, ϕ = 0.127 m
Stefan-Boltzmann constant, $\sigma = 5.669 \times 10^{-8}$ W/m^{2}K^4
By Kirchhoff's Law Emissivity, ε = Absorptivity, α= 0.44
(Ref: Heat Transmission, 3rd Edition - McAdams)
Ambient Temperature, T_A = 311 K
Area of cylinder ends, A_{CE} = 0.025 m^2
Total Area of curved surfaces, A_{CS} = 0.124 m^2
Decay Heat Input Q_{DT} = 4.8 W

The transport package is assumed to undergo free radiative heat transfer from the top and sides.

b. The transport package is assumed to undergo free convective heat transfer from the top, sides and bottom.

c. To maximize the temperature of the stainless steel cylinder surface temperature, the inside transport package faces are considered perfectly insulated so there is no conduction into the transport package. In use, the inside transport package will act as a heat sink during daylight hours and a heat source during the night, but this will be ignored for this calculation.

d. The transport package is approximated as a right cylinder with dimensions, 5 inches (0.127 m) in diameter and 12 ¼ inches (0.311m) long (approximation of the solid length of the cylinder).

e. The surfaces of the transport package are assumed to be solid. The faces are considered to be sufficiently thin so that no temperature gradients exist in the faces.

f. The worst case decay heat load (4.8 Watts) is added to the solar heat input load.

The following heat calculations are based on the steady-state equilibrium relationship between the heat gained by the package and the heat lost.

Heat Input, Q_{IN} = Heat Output, Q_{OUT} in the steady-state.
Q_{IN} = Solar Heat Input + Decay Heat
Q_{OUT} = Heat loss by Radiation and Convection
Q_{IE} = Heat input due to insolation falling on ends
Q_{IC} = Heat input due to insolation on curved surfaces,

Solar Heat Input = $\alpha(Q_{IE} + Q_{IC})$, where α is the absorptivity

The solar heat input is the combined solar heating of the top horizontal surface and the vertical side surface. The insolation data, provided in 10 CFR 71.71(c)(1), is found in Table 3.4.1a.

Table 3.4a: Insolation Data

Surface	Insolation for a 12 hour period (g-cal/cm^2 or W/m^2)
Horizontal base	None
Other horizontal flat surfaces	800
Non-horizontal flat surfaces	200
Curved surfaces	400

Practically all solid materials used in engineering are opaque to thermal radiation (even glass is only transparent to a fairly narrow range of wavelengths), and thermal radiation is in fact either reflected or absorbed within a very shallow depth of matter. Thus for solids it is possible to neglect transmissivity and write:

$$\text{reflectivity, } \rho + \text{absorptivity, } \alpha = 1$$

i.e., the sum of the radiation reflected and absorbed by the material is equal to the total incident energy. Since the reflected energy does not contribute to the heat energy contained within the system, or package, it is not necessary to consider it in the analysis. However, the absorptivity of the material is the fraction of the total incident energy entering the system, which in this case is the heat input due to insolation.

Heat input due to insolation falling on ends, $Q_{IE} = 200\ W/m^2 \times A_{CE} = 5.1\ W$
Heat input due to insolation on curved surfaces, $Q_{IC} = 400\ W/m^2 \times A_{CS} = 76\ W$

In the case of a cylindrical package standing on the ground, the top surface can radiate freely to the surroundings assumed to be effectively at ambient temperature. For the vertical surface, the upper 90° of azimuth can radiate freely to the surrounding air in the same way as the top surfaces. However, some radiation emitted in the lower 90° will be intercepted by the ground and vice versa. Owing to the complex nature of radiation interchange, and allowing for this asymmetrical characteristic, a geometrical factor g is assumed in the following analysis.

For curved surfaces, g_c = 0.5
For vertical surfaces, g_s = 0.5

Radiation heat transfer from curved surfaces,

$$Q_{RC} = g_c \sigma \varepsilon A_{CS}\{T_W^4 - T_A^4\} = 1.45\times10^{-9}\{T_W^4 - T_A^4\}$$

Radiation heat transfer from end surface,

$$Q_{RE} = g_s \sigma \varepsilon A_{CE}\{T_W^4 - T_A^4\} = 3.12\times10^{-10}\{T_W^4 - T_A^4\}$$

Heat transfer by convection is complex as it represents a dynamic process involving fluid flow. Newton introduced a quantity known as the "heat transfer coefficient" represented by the symbol, h. From Newton's Law of cooling due to heat loss by convection:

$$Q_C = hA[T_W - T_A]$$

Consider the curved surface of the cylinder:

Cylindrical Surface Convection, $Q_{CC} = H_C A_{CS}[T_W - T_A]$

Where the free convection coefficient, $H_C = 1.32\{(1/\phi)^{1/4}(T_W - T_A)^{1/4}\}$ (Ref 1)

Therefore, $Q_{CC} = 0.18(T_W - T_A)^{1.25}$

Considering the vertical surfaces of the cylinder:

Vertical End Surface Convection, $Q_{CE} = H_S A_{CE}\{T_W - T_A\}$

Where the free convection coefficient, $H_S = 1.42\{(1/\phi)^{1/4}(T_W-T_A)^{1/4}\}$ (Ref. 1)

Therefore, $Q_{CE} = 0.227\,(T_W-T_A)^{1.25}$

Total Heat Input, $Q_{IN} = \alpha(Q_{IE} + Q_{IC}) + Q_{DT} = 86$ W

Total Heat Output, $Q_{OUT} = (Q_{RC} + Q_{RE}) + (Q_{CC} + Q_{CE})$

$$86W = 1.45\times10^{-9}\{T_W^4 - (311)^4\} + 3.12\times10^{-10}\{T_W^4 - (311)^4\} + 0.407(T_W - (311))^{1.25}$$

Iteration of this relationship yields a maximum wall temperature (T_W) of 99.5°C (211°F). This temperature would constitute the most onerous Normal Transport thermal condition. Based on the package materials of construction, this temperature will not be sufficient to adversely affect the package containment or shielding integrity. As such the package complies with the requirements of this section.

References:

1. Engineering Thermodynamics, Work & Heat Transfer - 4th Edition., Rogers & Mayhew.

2. Heat Transmission, 3rd Edition - M^c^Adams.

3.4.1.2 Still Air (shaded) Decay Heating
(Reference:
- *USNRC, 10 CFR 71.43(g)*
- *IAEA TS-R-1, paragraphs 617)*

This analysis calculates the maximum surface temperature of the Model 865 Transport package in the shade (i.e., no insolation effects), assuming an ambient temperature of 38° C (100°F), per 10 CFR 71.43(g).

The same assumptions from Section 3.4.1.1 are used. To assure conservatism, the following additional assumptions are made:

a. The entire decay heat (4.8 W) is deposited in the exterior surfaces of the package.

b. The interior of the package is perfectly insulated and heat transfer occurs only from the exterior surface to the environment.

c. The only heat transfer mechanism is free convection.

Using these assumptions, the maximum wall temperature T_W is found using:

$$T_W = (q/hA) + T_A$$

Where:

$q = 4.8$ W (heat deposited per unit time on the package surface)
$h = 5$ W/m^2 K (free convection heat transfer coefficient for air)
(Reference Fundamentals of Heat and Mass Transfer, F.P. Incropera, 4th Edition, 1996)
$A = 0.149$ m^2 (surface area of the package)
$T_A = 311$°K (ambient air temperature of 38°C)

Solving for T_W produces a maximum wall temperature (T_W) of 44°C (111°F), which is less than the maximum 50°C (122°F) allowed by 10 CFR 71.43(g).

3.4.1.3 Cold Effected Materials

There are no components of the Model 865 that have increased susceptibility to failure by any mechanism at ambient temperatures of -40°C. Though the tungsten source rod can exhibit brittle tendencies, the reduction in temperature will not adversely affect the relative brittleness of the tungsten rod, therefore the package complies with the requirements of this section.

3.4.2 Maximum Normal Operating Pressure

All 865 components are vented to the atmosphere. As such, pressure will not build up in the packages during Normal Transport conditions. Containers will exhibit a pressure differential of 0 psi as they are vented to the atmosphere with no means for creating a pressure differential. No other contributing gas sources are present.

3.4.3 Maximum Thermal Stresses

The temperature and pressure variations described in Sections 3.4.1 and 3.4.2 will not adversely affect the transport package during normal transport since the melting temperatures of all safety critical components are well above these temperatures and the package will experience no pressures to cause package failure. It its therefore concluded that the Model 865 transport package will maintain their structural integrity and shielding effectiveness under the normal transport thermal stress conditions.

3.5 Thermal Evaluation Under Hypothetical Accident Conditions

3.5.1 Initial Conditions

The initial conditions used in the thermal evaluation of the Model 865 were based on the physical condition of the Test Specimens as summarized in Table 2.7.8.1. The Model 865, including the special form capsule, is assumed to reach the thermal test temperature of 800°C (1,472°F). At this temperature the nitrile rubber 'O' rings will have melted and charred. The resulting gases will have escaped the transport package through the space left by the melted gasket.

The nitrile rubber 'O' rings on the Model 865 will be destroyed when subjected to the Hypothetical Accident Conditions of Transport thermal test conditions. The other package materials, however, are suitable for use at 800°C (1,472°F) (see Table 3.2.1.a). The depleted uranium, which is susceptible to oxidation, is enclosed within stainless steel and would not be exposed to oxygen. The transport package will undergo no loss of structural integrity or shielding. The pressures generated have been demonstrated in Section 2.12.3 to be less than the yield strength of the material and will not adversely affect the package integrity.

3.5.2 Fire Test Conditions

Not applicable.

3.5.3 Maximum Temperatures and Pressure

Sections 2.12.3 for detailed description of the temperature variations calculated for the Model 865 during the thermal test. Since the 865 is vented to the atmosphere, no pressures are generated in the package during the thermal test.

3.5.4 Maximum Thermal Stresses

A finite element analysis, contained in Section 2.12.3, concludes no significant thermal stresses are generated during the thermal test.

3.5.5 Accident Conditions for Fissile Material Packages for Air Transport

Not Applicable. This package is not used for transport of Type B quantities of fissile material.

3.6 Appendix

Not Applicable.

Section 4 – CONTAINMENT

4.1 Description of the Containment System

(Reference:
- *USNRC, 10 CFR 71.33(a)(4)*
- *IAEA TS-R-1, paragraph 501(a), 501(b), 639 through 643 and 645)*

4.1.1 Containment Boundary

The containment system consists of the Model 865 transport package and the radioactive source capsule. The source capsule shall be qualified as Special Form radioactive material under 49 CFR 173 and IAEA TS-R-1 and shall meet a minimum ANSI N43.6 – 1997 Pressure Classification of 3.

Reference : ANSI/HPS N43.6 - 1997 – American National Standard – Sealed Radioactive Sources – Classification.

4.1.2 Special Requirements for Plutonium

Not applicable. This package is not used for transport of Type B quantities of Plutonium.

4.2 General Considerations

4.2.1 Type A Fissile Packages

Not applicable. This package is not used for transport of Type A quantities of fissile material.

4.2.2 Type B Packages

(Reference:
- *USNRC, 10 CFR 71.51*
- *IAEA TS-R-1, paragraphs 646 & 656)*

As demonstrated in the Test Plan 84 Report (Section 2.12.2) and supported by assessments when applicable, performance of the normal conditions of transport testing caused no loss or dispersal of radioactive contents, no significant increase in surface radiation levels and no substantial reduction in the effectiveness of the package. The Model 865 package therefore meets the requirements of this section.

4.3 Containment Under Normal Conditions of Transport (Type B Packages)

(Reference:
- *USNRC, 10 CFR 71.51(a)(1)*
- *IAEA TS-R-1, paragraphs 656(a))*

As demonstrated in the Test Plan 84 Report (Section 2.12.2) and supported by assessments when applicable, performance of the normal conditions of transport testing caused no breach of the source capsules contained in the package. Since the source capsules are the primary containment of the radioactive contents and no release from the source capsules occurred, the Model 865 package meet the requirements of this section.

4.4 Containment Under Hypothetical Accident Conditions (Type B Packages)

(Reference:

- *USNRC, 10 CFR 71.51(a)(2)*
- *IAEA TS-R-1, paragraphs 656(b))*

As demonstrated in the Test Plan 84 Report (Section 2.12.2) and supported by assessments when applicable, performance of the hypothetical accident conditions of transport testing, the radiation level at one meter from the surface of the package did not exceed 1 R/hr. The Model 865 package therefore meet the requirements of this section.

4.5 Leakage Rate Tests for Type B Packages

(Reference:

- *USNRC, 10 CFR 71.51*
- *IAEA TS-R-1, paragraphs 656(a))*

The primary containment for the radioactive material in the Model 865 transport package is the radioactive source capsule. All source capsules authorized for Type B transport in the Model 865 package are certified as special form radioactive material under 10 CFR Part 71, 49 CFR Part 173 and IAEA TS-R-1. After manufacture and again once every six months thereafter prior to transport, the source capsule is leak tested in accordance with ISO9978:1992(E) (or more recent editions) to ensure that containment of the source does not allow release of more than 0.005 μCi of radioactive material. These fabrication and periodic tests ensure that contamination release from the package does not exceed the regulatory limits.

Reference : ISO9978:1992(E) – Radiation Protection – Sealed Radioactive Sources – Leakage Test Methods.

4.6 Appendix

Not Applicable.

Section 5 - SHIELDING EVALUATION

5.1 Description of Shielding Design

(Reference:

- *USNRC, 10 CFR 71.31*
- *IAEA TS-R-1, paragraph 701 and 702)*

5.1.1 Design Features

The principal shielding in the Model 865 transport package is the depleted uranium shield assembly. The shield is described in drawings contained in Section 1.4.

5.1.2 Summary Table of Maximum Radiation Levels

The tables in this Section include radiation profile data obtained from the 865 packages that were tested to the Normal and Hypothetical Accident Conditions of Transport under Test Plan 84 Report (see Section 2.12.2). Figure 5.1a shows the profile orientations for the surveys documented in this section. All reported dose rates are the highest measured for the location noted and survey meaurements were corrected to the maximum package capacity.

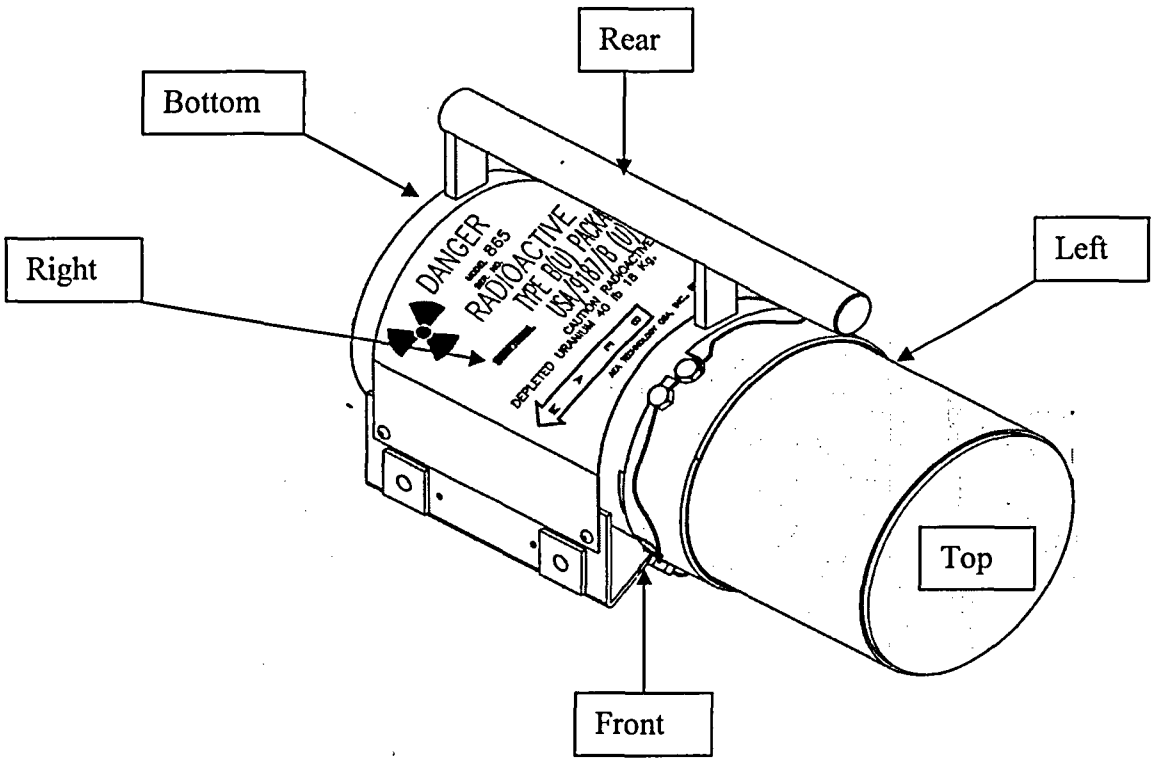

Figure 5.1a: Profile Orientation for the Model 865

The following notes apply to all tables in this section:

Note 1: Transport Index may not exceed 10. The Transport Index is equivalent to the 1 meter reading in mRem per hour (i.e., 5 mRem per hour at 1 meter = a Transport Index of 5.0).

Note 2: The maximum Transport Index based on the mrem per hour readings at one meter from the surface of this package was 0.8. All packages accepted and released for shipment under this Model designation will have a Transport Index less than or equal to 10.

Table 5.1a: Model 865 Test Unit TP84(A) After Transport Testing
Summary Table of External Radiation Levels Extrapolated to Capacity of 240 Ci Ir-192
(Non-Exclusive Use)

Normal & Hypothetical Accident Conditions of Transport	Package Surface mSv per hour (mrem per hour)			1 Meter from Package Surface μSv per hour (mrem per hour)		
Radiation	Top	Side	Bottom	Top	Side	Bottom
Gamma	0.32 (32)	1.12 (112)	0.56 (56)	2 (0.2)	5 (0.5)	4 (0.4)
Neutron	NA	NA	NA	NA	NA	NA
Total	0.32 (32)	1.12 (112)	0.56 (56)	2 (0.2)	5 (0.5)	4 (0.4)
10 CFR 71.47(a) Limit	2 (200)	2 (200)	2 (200)	100 (10)	100 (10)	100 (10)

Table 5.1b: Model 865 Test Unit TP84(B) After Transport Testing
Summary Table of External Radiation Levels Extrapolated to Capacity of 240 Ci Ir-192
(Non-Exclusive Use)

Normal Conditions of Transport	Package Surface mSv per hour (mrem per hour)			1 Meter from Package Surface μSv per hour (mrem per hour)		
Radiation	Top	Side	Bottom	Top	Side	Bottom
Gamma	0.26 (26)	1.37 (137)	0.62 (62)	4 (0.4)	7 (0.7)	5 (0.5)
Neutron	NA	NA	NA	NA	NA	NA
Total	0.26 (26)	1.37 (137)	0.62 (62)	4 (0.4)	7 (0.7)	5 (0.5)
10 CFR 71.47(a) Limit	2 (200)	2 (200)	2 (200)	100 (10)	100 (10)	100 (10)

5.2 Source Specification

5.2.1 Gamma Source

(Reference:

- *USNRC, 10 CFR 71.33(b)(1) & (3))*
- *IAEA TS-R-1, Section IV & paragraph 807(a))*

The gamma source allowed for transport in the Model 865 transport package is specified in Sections 1.2.3 and 2.10.

5.2.2 Neutron Source

Not Applicable. The Model 865 transport package is not used for the transportation of neutron emitting sources.

5.3 Shielding Model

5.3.1 Configuration of Source and Shielding

A shielding model was not used to justify acceptance of this package. Shielding justification was based on direct measurement.

5.3.2 Material Properties

Not Applicable. A shielding model was not used in the justification of this package. Shielding justification was based on direct measurement.

5.4 Shielding Evaluation

5.4.1 Methods

Shielding justification was based on direct measurement. All packages are profiled prior to final acceptance and shipment. This profile takes into account the maximum capacity of the package. Any package not meeting the required dose rates is rejected.

5.4.2 Input and Output Data

Radiation measurements included in this Section were adjusted to the maximum activity capacity for the package (e.g., activity correction factor) and the surface measurements were also adjusted to correct for off-set of the survey meter probe from the true surface of the package.

Activity correction factors (CF_A) were obtained by using the following relationship:

$$CF_A = \frac{Maximum\,Package\,Activity\,Capacity\ (A_C)}{Actual\ \mathrm{Pr}\,ofile\,Activity\ (A_P)}$$

$$For\,Example,\ if\ A_P = 230\,Ci\ and\ A_C = 240\,Ci,\ then$$

$$CF_A = \frac{240\,Ci}{230\,Ci} = 1.04$$

Therefore all original surface and 1 meter profile measurements would be multiplied by a factor of 1.04 for a package profiled using 230 Ci and a package capacity of 240 Ci.

Radiation measurements at the surface of the container were also adjusted to compensate for the off-set of the survey meter probe from the true surface of the package.

Surface correction factors (SCF) were obtained by using the following relationship:

$$SCF = \frac{d_2}{d_1}\ where\ d_1\ and\ d_2\ are\ \det er\ \min ed\ as\ shown\ in\ Figure\ 5.4.2.a.$$

$$For\,Example,\ if\ d_1 = 9\,inches\ and\ d_2 = 9.5\,inches,\ then$$

$$SCF = \frac{9.5\,inches}{9\,inches} = 1.06$$

Therefore in the example shown, all original surface profile measurements located along the side of the drum shown in Figure 23 would also be multiplied by a factor of 1.06 to account for surface correction of the detector to the drum. Different SCF's would be calculated for the any dimension of the container where the minimum distance from the center of the activity to the center of the radiation probe is different.

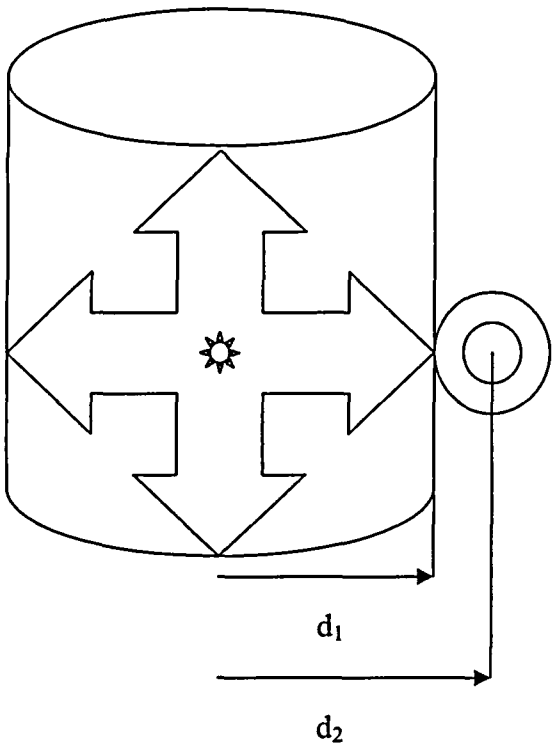

d_1 = distance from activity center to surface of container.

d_2 = distance from activity center to surface of container plus radius of the survey meter probe.

FIGURE 5.4.2.a. Sample Surface Correction Factor Distance Criteria

The radiation profile data showed no increase in radiation dose after testing beyond normal measurement variations. All test specimens met the regulatory requirements.

5.4.3 Flux-to-Dose-Rate Conversion

Not Applicable. Flux rates were not used to convert to dose rates in any shielding evaluations.

5.4.4 External Radiation Levels

Radiation surveys for the Model 865 showed maximum surface and 1 meter radiation levels from the transport packages within regulatory limits. Radiation surveys of the Model 865 transport package after undergoing normal and accident condition transport testing were also well within the regulatory limits.

5.5 Appendix

Not Applicable.

Section 6 - CRITICALITY EVALUATION

All parts of this section are not applicable. The Model 865 transport package is not used for shipment of Type B quantities of fissile material.

Section 7 – Package Operations

Operation of the Model 865 transport package must be in accordance with the operating instructions supplied with the transport package, per 10 CFR 71.87 and 71.89.

(Reference:
- *USNRC, 10 CFR 71.87 and 71.89*
- *IAEA TS-R-1, paragraph 501(a), 502(e) and 503)*

7.1 Package Loading

7.1.1 Preparation for Loading

The Model 865 package must be loaded and closed in accordance with the following written procedures. Shipment of Type B quantities of radioactive material are authorized for sources specified in Section 7.1.1.1. Maintenance and inspection of the Model 865 packaging is in accordance with the requirements specified in Section 7.1.1.2.

7.1.1.1 Authorized Package Contents

(Reference:
- *USNRC, 10 CFR 71.87(a)*
- *IAEA TS-R-1, paragraph 502(f))*

Table 7.1a: Model 865 Package Information

Nuclide	Form	Maximum Capacity[1]	Maximum DU Weight	Maximum Weight
Ir-192	Special Form Sources	240 Ci	42 lbs (19 kg)	60 lbs (27 kg)

[1]Maximum Activity for Ir-192 is defined as output Curies as required in ANSI N432 and 10 CFR 34.20 and in line with TS-R-1, USNRC 10 CFR 71 and USDOT 49 CFR 173.

7.1.1.2 Packaging Maintenance and Inspection Prior to Loading

7.1.1.2.a Ensure all markings are legible and labels are securely fastened to the container.

7.1.1.2.b Inspect the container for signs of significant degradation. Ensure that the housing integrity is secure and does not have any significant dents, cracks of any type or rust.

7.1.1.2.c Ensure all bolts are present and secured. Assure safety wires are present and intact as noted on the drawings referenced in the Type B certificate.

7.1.1.2.d Check that the source position indicator rod is in the down position and the key operated lock is engaged and the key removed, assuring that the source is locked in place in its proper shielded storage position..

7.1.1.2.e Install the shipping cover using eight M6x1x12 mm long bolts. These bolts should be hand tightened in accordance with the specifications listed on drawing R86590. Attach a tamper indicating seal with an identification mark to two of these bolts.

7.1.1.2.f If the container fails any of the inspections in steps 7.1.1.2.a-e, remove the container from use until it can be brought into compliance with the Type B certificate.

7.1.2 Loading of Contents

NOTE: ***These loading operations apply to "dry" loading only. The Model 865 package is NOT approved for wet loading.***

7.1.2.1 Prior to transportation, ensure the package and its contents meet the following requirements:

7.1.2.1.a The contents are authorized for use in the package.

7.1.2.1.b The package condition has been inspected in accordance with Section 7.1.1.2.

7.1.2.1.c Ensure that the source is secured into place in the storage position in accordance with the following requirements. Compliance with the following requirements ensures that the source is securely locked in position before shipment.

1. Removal and installation of radioactive material contained within the shield container must be performed in a shielded cell/enclosure capable of holding the maximum isotope capacity of the container. Container loading can only be performed by persons specifically authorized under an NRC or Agreement State license (or as otherwise authorized by an International Regulatory Authority). All necessary safety precautions and regulations must be observed to ensure safe transfer of the radioactive material. Source removal or loading should not be attempted by general users of this package and it is recommended that the device be returned to QSA Global Inc. for source loading or unloading.

2. Remove the shipping cover. Unlock the actuator assembly. Remove the four bolts which secure the actuator assembly to the container body.

3. Using remote handling techniques, remove the actuator assembly from the container body. Load the source assembly so that it is fully inserted into the source rod assembly as shown on drawing R86590. Once the source rod is loaded, install the source rod into the container and secure in place using the actuator assembly and locking mechanism as shown on drawing R86590.

7.1.3 Preparation for Transport

(Reference:
- *10 CFR 71.87*
- *IAEA TS-R-1, applicable paragraphs of Section V)*

7.1.3.1 Ensure that all conditions of the certificate of compliance are met.

7.1.3.2 Perform a contamination wipe of the outside surface of the package and ensure removable contamination does not exceed the limit specified in 49 CFR 173.443.

7.1.3.3 Survey all exterior surfaces of the package to assure that the radiation level does not exceed 200 mR/hr at the surface. Measure the radiation level at one meter from all exterior surfaces to assure that the radiation level is less than 10 mR/hr.

7.1.3.4 Ship the container according to the procedure for transporting radioactive material as established in 49 CFR 171-178.

NOTE: The US Department of Transportation, in 49 CFR 173.22(c), requires each shipper of Type B quantities of radioactive material to provide prior notification to the consignee of the dates of shipment and expected arrival.

7.2 Package Unloading

7.2.1 Receipt of Package from Carrier

7.2.1.1 The consignee of a transport package of radioactive material must make arrangements to receive the transport package when it is delivered. If the transport package is to be picked up at the carrier's terminal, 10 CFR 20.1906 requires that this be done expeditiously upon notification of its arrival.

7.2.1.2 Upon receipt of a transport package of radioactive material:
(Reference:
- *IAEA TS-R-1, paragraph 510 and 511)*

7.2.1.2.a Survey the transport package in accordance with the requirements of 10 CFR 20.1906.

7.2.1.2.b Record the actual radiation levels on the receiving report.

7.2.1.2.c If the radiation levels exceed the limits specified in 10 CFR 71.47, secure the container in a Restricted Area and notify the appropriate personnel in accordance with 10 CFR 20 or applicable Agreement State regulations.

7.2.1.2.d Inspect the overpack if it is used and the Model 865 package for physical damage or leaking. If the Model 865 package is damaged or leaking or any part of the package (including overpack) is suspected to have leaked or been damaged, restrict access to the package. As soon as possible, contact the Radiation Safety Office to perform a full assessment of the package condition and take necessary follow-up actions.

7.2.1.2.e Visually inspect the Model 865 to assure that the seal wire has not been tampered with.

7.2.1.2.f Record the radioisotope, activity, model number, and serial number of the source and the transport package model number and serial number.

7.2.2 Removal of Contents

7.2.2.1 Arrange for unloading of the package in accordance with the information on drawing R86590 and the instructions supplied with the package per 10 CFR 71.89.

NOTE: Removal and installation of radioactive material contained within the shield container must be performed in a shielded cell/enclosure capable of holding the maximum isotope capacity of the container. Container loading can only be performed by persons specifically authorized under an NRC or Agreement State license (or as otherwise authorized by an International Regulatory Authority). All necessary safety precautions and regulations must be observed to ensure safe transfer of the radioactive material.

Source removal or loading should not be attempted by general users of this package and it is recommended that the device be returned to QSA Global Inc. for source loading or unloading.

7.2.2.2 Unloading of the package must also be in accordance with applicable licensing provisions for the user's facility related to radioactive material handling.

7.3 Preparation of Empty Package for Transport

(Reference:

- *IAEA TS-R-1, paragraph 520)*

In the following instructions, an *empty* transport package refers to a Model 865 transport package without an active source contained within the shielded container. A device returned to the user as "empty" will have been visually confirmed at QSA Global Inc. (or other specifically licensed user) that the radioactive source has been removed and the container is confirmed empty. To ship an empty transport package:

7.3.1. To ship an empty package perform a radioactive contamination wipe test of the outer shipping package. This consists of rubbing filter paper or absorbent material, using heavy finger pressure, over an area of 300 cm^2 (46.5 in^2) of the package surface. The activity on the filter paper should not exceed 0.00001 uCi/cm^2 of removable contamination.

NOTE: If the device is to be shipped without an overpack, the radioactive contamination wipe should be made of the outer surfaces of the device. If the device will be shipped inside of an overpack, the radioactive contamination wipe test should be made of both the outer surfaces of the device and the overpack with the device packaged for shipment inside the overpack.

7.3.2 After the survey prepare the package depending upon the radiation levels obtained as prescribed in 49 CFR 173.

7.3.3 Ship the container according to the procedure for transporting radioactive material as established in 49 CFR 171-178.

7.4 Other Operations

7.4.1 Package Transportation By Consignor

(Reference:

- *IAEA TS-R-1, paragraph 508, 512 through 514)*

Persons transporting the Model 865 transport package in their own conveyances should comply with the following:

7.4.1.1 For a conveyance and equipment used regularly for radioactive material transport, check to determine the level of contamination that may be present on these items. This contamination check is suggested if the package shows signs of damage upon receipt or during transport, or if a leak test on the special form source transported in the package exceeds the allowable limit of 185 Bq.

7.4.1.2 If contamination above 4 Bq/cm^2 (when averaged over 300 cm^2) is detected on any part of a conveyance or equipment used regularly for radioactive material transport, or if a radiation level exceeding 5 μSv/h is detected on any conveyance or equipment surface, then remove the affected item from use until decontaminated or decayed to

meets these limits.

7.4.2 Emergency Response

(Reference:

- *IAEA TS-R-1, paragraph 308 and 309)*

In the event of a transport emergency or accident involving this package, follow the guidance contained in "2000 Emergency Response Guidebook: A Guidebook for First Responders During the Initial Phase of a Dangerous Goods/Hazardous Materials Incident", or equivalent guidance documentation.

Reference: "2000 Emergency Response Guidebook: A Guidebook for First Responders During the Initial Phase of a Dangerous Goods/Hazardous Materials Incident"

7.5 Appendix

Not Applicable.

Section 8 - ACCEPTANCE TESTS AND MAINTENANCE PROGRAM

8.1 Acceptance Test

8.1.1 Visual Inspections and Measurements

8.1.1.1 Visually inspect each transport package component to be shipped to assure the following:

8.1.1.1.a The container was constructed properly in accordance with drawing R86590.

8.1.1.1.b All fasteners (screws) as required by drawing R86590 are properly installed and secured.

8.1.1.1.c The relevant labels are attached, contain the required information, and are marked in accordance with 10 CFR 20.1904, 10 CFR 40.13(c)(6)(i), 10 CFR 34, and 10 CFR 71 or equivalent Agreement State regulations.

8.1.1.2 Evaluate each Model 865 for shielding to ensure the transport dose rate requirements are met when the container is loaded to capacity.

8.1.1.3 Visual inspections and measurements will be performed in accordance with QSA Global Inc.'s USNRC approved Quality Assurance Program No. 0040.

8.1.2 Weld Examinations

Weld examinations will be performed in accordance with the applicable drawings requirements and in accordance with QSA Global Inc.'s USNRC approved Quality Assurance Program No. 0040.

8.1.3 Structural and Pressure Tests

(Reference:

- *10 CFR 71.85(a) and (b))*
- *IAEA TS-R-1, paragraph 501(a))*

With the source assembly locked in the shielded position, the actuating mechanism of the container is pressurized to assure that the locking assembly secures the source assembly in the shielded position. Failure of this test will prevent use of the package until the cause of the failure is corrected and the package is retested.

Prior to first use as part of a 865 transport package, container structural conformance will be evaluated in accordance with the applicable drawings requirements and in accordance with QSA Global Inc.'s USNRC approved Quality Assurance Program No. 0040.

The containment system is not designed to require increased or decreased operating pressures to maintain containment during transport, therefore pressure tests of package components prior to first use is not required.

8.1.4 Leakage Tests

The source capsule (primary containment) is wipe tested for leakage of radioactive contamination upon initial manufacture. The removable contamination must be less than 0.005 microcuries. The source capsule will also be subjected to leak tests under ISO9978:1992(E) (or more recent editions). The source capsule is not used if it fails any of these tests.

8.1.5 Component and Material Tests

The lock assembly of the package is tested to assure that the security of the source will be maintained. Failure of this test will prevent use of the package until the cause of the failure is corrected. Component and material compliance is achieved in accordance with the requirements in QSA Global Inc.'s USNRC approved Quality Assurance Program No. 0040.

8.1.6 Shielding Tests

The radiation levels at the surface of the transport package and at 1 meter from the surface are evaluated prior to first transport. These radiation levels, when extrapolated to the rated capacity of the transport package and performed using an approved source capsule, must not exceed 200 mR/hr at the surface, nor 10 mR/hr at 1 meter from the surface of the transport package. Failure of this test will prevent use of the transport package as a Type B(U) package.

8.1.7 Thermal Tests

Not applicable. The source content of the Model 865 package has minimal effect on the package surface temperature and therefore no additional testing is necessary to evaluate thermal properties of the packaging.

8.1.8 Miscellaneous Tests

Not applicable.

8.2 Maintenance Program

8.2.1 Structural and Pressure Tests

Not applicable. Material certification, or equivalent dedication process, is obtained for Safety Class A components used in the transport package prior to their initial use. Based on the construction of the design, no additional structural testing during the life of the package is necessary if the container shows no signs of defect when prepared for shipment in accordance with the requirements of Section 7 of the SAR.

The 865 packaging system is not designed to require increased or decreased operating pressures to maintain containment during transport, therefore pressure tests of package components prior to individual shipment is not required.

8.2.2 Leakage Tests

As described in Section 8.1.4, "Leakage Tests," the radioactive source assembly is leak-tested at manufacture. In addition, the sources are leak tested in accordance with that Section at least once every six months thereafter if being transported to ensure that removable contamination is less than 0.005 microcuries. Also a contamination wipe is performed of the shield source tubes whenever the shield is returned to the manufacturer (typically the shield is shipped to a customer with new sources and may be returned directly to the manufacturer with decayed sources for disposition).

8.2.3 Component and Material Tests

The transport package is inspected for tightness of fasteners, proper seal wires, and general condition prior to each use as described in Section 7 of this SAR. No additional component or material testing is required prior to shipment.

8.2.4 Thermal Tests

Not applicable. The source content of the Model 865 package has minimal effect on the package surface temperature and therefore no additional testing is necessary to evaluate thermal properties of the packaging prior to shipment.

8.2.5 Miscellaneous Tests

It is recommended that inspection and maintenance of the Model 865 container and the Model 86550 control unit be performed at intervals not to exceed three months. This inspection and maintenance includes the following:

8.2.5.1 Check the operation of the survey meter and check to assure that the source is properly stored by measuring the radiation intensity at the surface of the container and at one meter from the surface. The radiation level should not exceed 200 mR/hr at the surface nor 10 mR/hr at one meter from the surface.

8.2.5.2 Inspect the container for any signs of damage or excessive wear. Check to assure that there are no loose fasteners or broken safety wires. Assure that the container is properly labeled.

8.2.5.3 Inspect all welds for signs of corrosion and/or cracks.

8.2.5.4 Ensure that all labels are securely attached and legible.

8.2.5.5 Inspect the condition of all bolts and screws. If there is any sign of strain present on the bolt or damage to the threads discard and replace.

8.2.5.6 Inspect the outer shell of the container for cracks, pitting and dents. The damaged component or assembly should be replaced. Denting of the outer shell is acceptable so long as the performance of the container is not affected and measured dose rates are within regulatory limits.

8.2.5.7 If the device is used in an environment that would be conducive to the creation of crevice corrosion (i.e. salt water splash zone, oil rig work, etc.), the device should be rinsed after use with clean water to remove any residue which could contribute to corrosion.

8.2.5.8 If the device is routinely used for underwater radiography, then the projector should be tested by a non-destructive examination (NDE) technique such as dye penetrant at source changes. The NDE should be performed on all external shield container surfaces, particularly under the label. Evidence of pitting, cracking or corrosion indicate the need for repair or scrapping of the component or assembly.

8.2.5.9 In addition, the radioactive source should be wipe tested for leakage of radioactive contamination every six months.

8.2.5.10 Prior to each use, a radiation survey of the package should be made to assure radiation levels do not exceed 200 mR/hr at the surface or 10 mR/hr at 3 ft from the surface of the package.

8.3 Appendix

Not applicable.

Section 9 – IAEA TS-R-1 1996 Edition (Revised) Requirements not Otherwise Addressed – Section VI

9.1 General Package Design Requirements

9.1.1 *(Reference: IAEA TS-R-1, paragraph 609)*

As far as practicable, the packaging shall be so designed and finished that the external surfaces are free from protruding features and can be easily decontaminated.

The exterior surface of the 865 package is comprised of steel. The materials and fabrication of the package provides an external surface which is free from protruding features not necessary for use of the package and it can be easily decontaminated if necessary.

9.1.2 *(Reference: IAEA TS-R-1, paragraph 610)*

As far as practicable, the outer layer of the package shall be so designed as to prevent the collection and the retention of water.

The exterior surface of the 865 package is comprised of steel. The materials and fabrication of the package are water resistant and prevent, as far as practicable, the collection and retention of water.

9.1.3 *(Reference: IAEA TS-R-1, paragraph 611)*

Any features added to the package at the time of transport which are not part of the package shall not reduce its safety.

There are no added features to the package other than transport labels, markings, etc. These items are standard in package shipment and will not reduce the package safety due to their presence.

9.1.4 *(Reference: IAEA TS-R-1, paragraph 614)*

All valves through which the radioactive contents could otherwise escape shall be protected against unauthorized operation.

Not applicable. This package does not incorporate the use of valves.

9.1.5 *(Reference: IAEA TS-R-1, paragraph 616)*

For radioactive material having other dangerous properties the package design shall take into account those properties; see paras 109 and 507.

Not applicable. The contents of this package do not have any other dangerous properties other than its radioactivity.

9.2 Requirements for Type A Packages (required by TS-R-1 paragraph 650)

9.2.1 *(Reference: IAEA TS-R-1, paragraph 644)*

All valves, other than pressure relief valves, shall be provided with an enclosure to retain any leakage from the valve.

Not applicable. This package does not incorporate the use of valves.

9.2.2 *(Reference: IAEA TS-R-1, paragraph 647)*

The design of a package intended for liquid radioactive material shall make provision for ullage to accommodate variations in the temperature of the contents, dynamic effects and filling dynamics.

Not applicable. This package is not used for the transport of liquids.

9.3 Requirements for Type B(U) Packages

9.3.1 *(Reference: IAEA TS-R-1, paragraph 659)*

A package shall not include a pressure relief system from the containment system which would allow the release of radioactive material to the environment under the conditions of the tests specified in paras 719-724 and 726-729.

Not applicable. This package does not incorporate a pressure relief system.

9.4 Appendix

Not Applicable.