US Nuclear Regulatory Commission (NRC)

LICENSE APPLICATION

FOR

RENEWAL AND COMPLETE REVISION OF NRC BYPRODUCT MATERIAL LICENSE NUMBER 29-01022-10

II/15

HEADQUARTERS
U.S.ARMY COMMUNICATIONS-ELECTRONICS COMMAND
(CECOM)
Fort Monmouth, New Jersey 07703

NRC FORM 313
(1-84)
10 CFR 30, 32, 33, 34, 35 and 40

APPLICATION FOR MATERIAL LICENSE

U.S. NUCLEAR REGULATORY COMMISSION
APPROVED BY OMB
3150-0120
Expires: 5-31-87

INSTRUCTIONS: SEE THE APPROPRIATE LICENSE APPLICATION GUIDE FOR DETAILED INSTRUCTIONS FOR COMPLETING APPLICATION. SEND TWO COPIES OF THE ENTIRE COMPLETED APPLICATION TO THE NRC OFFICE SPECIFIED BELOW.

FEDERAL AGENCIES FILE APPLICATIONS WITH:

U.S. NUCLEAR REGULATORY COMMISSION
DIVISION OF FUEL CYCLE AND MATERIAL SAFETY, NMSS
WASHINGTON, DC 20555

ALL OTHER PERSONS FILE APPLICATIONS AS FOLLOWS, IF YOU ARE LOCATED IN:

CONNECTICUT, DELAWARE, DISTRICT OF COLUMBIA, MAINE, MARYLAND, MASSACHUSETTS, NEW JERSEY, NEW YORK, PENNSYLVANIA, RHODE ISLAND, OR VERMONT, SEND APPLICATIONS TO:

U.S. NUCLEAR REGULATORY COMMISSION, REGION I
NUCLEAR MATERIAL SECTION B
631 PARK AVENUE
KING OF PRUSSIA, PA 19406

ALABAMA, FLORIDA, GEORGIA, KENTUCKY, MISSISSIPPI, NORTH CAROLINA, PUERTO RICO, SOUTH CAROLINA, TENNESSEE, VIRGINIA, VIRGIN ISLANDS, OR WEST VIRGINIA, SEND APPLICATIONS TO:

U.S. NUCLEAR REGULATORY COMMISSION, REGION II
MATERIAL RADIATION PROTECTION SECTION
101 MARIETTA STREET, SUITE 2900
ATLANTA, GA 30323

IF YOU ARE LOCATED IN:

ILLINOIS, INDIANA, IOWA, MICHIGAN, MINNESOTA, MISSOURI, OHIO, OR WISCONSIN, SEND APPLICATIONS TO:

U.S. NUCLEAR REGULATORY COMMISSION, REGION III
MATERIALS LICENSING SECTION
799 ROOSEVELT ROAD
GLEN ELLYN, IL 60137

ARKANSAS, COLORADO, IDAHO, KANSAS, LOUISIANA, MONTANA, NEBRASKA, NEW MEXICO, NORTH DAKOTA, OKLAHOMA, SOUTH DAKOTA, TEXAS, UTAH, OR WYOMING, SEND APPLICATIONS TO:

U.S. NUCLEAR REGULATORY COMMISSION, REGION IV
MATERIAL RADIATION PROTECTION SECTION
611 RYAN PLAZA DRIVE, SUITE 1000
ARLINGTON, TX 76011

ALASKA, ARIZONA, CALIFORNIA, HAWAII, NEVADA, OREGON, WASHINGTON, AND U.S. TERRITORIES AND POSSESSIONS IN THE PACIFIC, SEND APPLICATIONS TO:

U.S. NUCLEAR REGULATORY COMMISSION, REGION V
MATERIAL RADIATION PROTECTION SECTION
1450 MARIA LANE, SUITE 210
WALNUT CREEK, CA 94596

PERSONS LOCATED IN AGREEMENT STATES SEND APPLICATIONS TO THE U.S. NUCLEAR REGULATORY COMMISSION ONLY IF THEY WISH TO POSSESS AND USE LICENSED MATERIAL IN STATES SUBJECT TO U.S. NUCLEAR REGULATORY COMMISSION JURISDICTION.

1. THIS IS AN APPLICATION FOR *(Check appropriate item)*

- [ ] A. NEW LICENSE
- [ ] B. AMENDMENT TO LICENSE NUMBER _____
- [x] C. RENEWAL OF LICENSE NUMBER 29-01022-10

2. NAME AND MAILING ADDRESS OF APPLICANT *(Include Zip Code)*

Commander
U.S. Army Communications-Electronics Command
ATTN: AMSEL-SF
Fort Monmouth, NJ 07703-5000

3. ADDRESS(ES) WHERE LICENSED MATERIAL WILL BE USED OR POSSESSED.

See Supplement A

4. NAME OF PERSON TO BE CONTACTED ABOUT THIS APPLICATION: Mr. Joseph Santarsiero or Mr. Joseph Furia

TELEPHONE NUMBER: (201) 544-4427

SUBMIT ITEMS 5 THROUGH 11 ON 8½ x 11" PAPER. THE TYPE AND SCOPE OF INFORMATION TO BE PROVIDED IS DESCRIBED IN THE LICENSE APPLICATION GUIDE.

5. RADIOACTIVE MATERIAL
a. Element and mass number, b. chemical and/or physical form, and c. maximum amount which will be possessed at any one time. See Supplement B

6. PURPOSE(S) FOR WHICH LICENSED MATERIAL WILL BE USED. See Supplement B

7. INDIVIDUAL(S) RESPONSIBLE FOR RADIATION SAFETY PROGRAM AND THEIR TRAINING AND EXPERIENCE. See Supplement C

8. TRAINING FOR INDIVIDUALS WORKING IN OR FREQUENTING RESTRICTED AREAS. See Supplement D

9. FACILITIES AND EQUIPMENT. See Supplement E

10. RADIATION SAFETY PROGRAM. See Supplement F

11. WASTE MANAGEMENT. See Supplement G

12. LICENSEE FEES *(See 10 CFR 170 and Section 170.31)*
FEE CATEGORY
AMOUNT ENCLOSED $

13. CERTIFICATION. *(Must be completed by applicant)* THE APPLICANT UNDERSTANDS THAT ALL STATEMENTS AND REPRESENTATIONS MADE IN THIS APPLICATION ARE BINDING UPON THE APPLICANT.

THE APPLICANT AND ANY OFFICIAL EXECUTING THIS CERTIFICATION ON BEHALF OF THE APPLICANT, NAMED IN ITEM 2, CERTIFY THAT THIS APPLICATION IS PREPARED IN CONFORMITY WITH TITLE 10, CODE OF FEDERAL REGULATIONS, PARTS 30, 32, 33, 34, 35, AND 40 AND THAT ALL INFORMATION CONTAINED HEREIN, IS TRUE AND CORRECT TO THE BEST OF THEIR KNOWLEDGE AND BELIEF.

WARNING: 18 U.S.C. SECTION 1001 ACT OF JUNE 25, 1948, 62 STAT. 749 MAKES IT A CRIMINAL OFFENSE TO MAKE A WILLFULLY FALSE STATEMENT OR REPRESENTATION TO ANY DEPARTMENT OR AGENCY OF THE UNITED STATES AS TO ANY MATTER WITHIN ITS JURISDICTION.

SIGNATURE—CERTIFYING OFFICER	TYPED/PRINTED NAME	TITLE	DATE
Michael C. Kotch	MICHAEL C. KOTCH COL, GS	Chief of Staff	

14. VOLUNTARY ECONOMIC DATA

a. ANNUAL RECEIPTS
- [ ] <$250K
- [ ] $250K–500K
- [ ] $500K–750K
- [ ] $750K–1M
- [ ] $1M–3.5M
- [ ] $3.5M–7M
- [ ] $7M–10M
- [ ] >$10M

b. NUMBER OF EMPLOYEES *(Total for entire facility excluding outside contractors)*

c. NUMBER OF BEDS

d. WOULD YOU BE WILLING TO FURNISH COST INFORMATION *(dollar and/or staff hours)* ON THE ECONOMIC IMPACT OF CURRENT NRC REGULATIONS OR ANY FUTURE PROPOSED NRC REGULATIONS THAT MAY AFFECT YOU? *(NRC regulations permit it to protect confidential commercial or financial—proprietary—information furnished to the agency in confidence)*

- [ ] YES
- [ ] NO

FOR NRC USE ONLY

TYPE OF FEE	FEE LOG	FEE CATEGORY	COMMENTS	APPROVED BY

AMOUNT RECEIVED	CHECK NUMBER	DATE

Supplement A

1. Reference: Item 3, NRC Form 313.

2. Radioactive material shall be utilized by Department of the Army (DA) military and/or civilian personnel at the U.S. Army Communications-Electronics Command (CECOM) and Fort Monmouth, Fort Monmouth, NJ.

Supplement B

1. Reference: Item 5 and 6, NRC Form 313.

2. A. Cobalt-60 (Co-60) B. Sealed Sources (Curtis-Wright Dwg D700129F) C. Not to exceed 13,000 Curies total

3. Use of the Co-60 source includes, but is not limited to:

   a. Radiation detection instrumentation research and development.

   b. Basic and applied research and development technologies.

Supplement C

1. Reference: Item 7, NRC Form 313.

2. Enclosures 1, 2 and 3 are the qualifications of the Radiation Protection Officer (RPO), alternate RPO and license manager, respectively.

JOSEPH T. FURIA, Health Physicist
U.S. Army Communications-Electronics Command (CECOM)
Fort Monmouth, NJ 07703-5000

EDUCATION

College: St. Joseph's University, Philadelphia, PA
BS in Chemistry, [redacted]

University of Virginia, Charlottsville, VA
Pratt Research Fellow, [redacted]

Ex 6

Post Graduate: Washington University, St. Louis, MO
MA in Nuclear Chemistry, [redacted]

PROFESSIONAL EXPERIENCE

August 1984 - Present	Senior Health Physicist Safety Branch	CECOM Fort Monmouth, NJ

Health Physicist responsible for the establishment and implementation of the CECOM Safety Program aimed at establishing life cycle controls of CECOM managed sources of ionizing radiation; evaluate radiation protection programs at Army and National Guard facilities; write U.S. Nuclear Regulatory Commission (NRC) license applications and Department of the Army Radiation Authorization (DARA) applications; establish programs for the safe utilization of sources of ionizing radiation at research and development activities at Fort Monmouth.

August 1983 - August 1984	Health Physicist Safety Office	U.S. Army Garrison Fort Detrick, MD

Health Physicist and Radiation Protection Officer responsible for the safe acquisition, utilization and disposal of sources of ionizing radiation used in biological research; write NRC license and DARA applications; maintain personnel dosimetry, training and calibration programs; provide technical assistance and guidance to researchers; collect, consolidate and dispose of all radiological waste.

March 1982 - August 1983	Health Physicist Safety Office	U.S. Army Garrison Fort Meade, MD

Health Physicist and Radiation Protection Office responsible for the safe acquisition, use, maintenance and disposal of sources of ionizing radiation; evaluate radiation protection programs at Army Reserve centers in four States; maintain personnel dosimetry and training programs.

Ex 6 Portions

FORMAL TRAINING

TOPIC	Duration of Training	On the Job	Formal Course
a. Fundamentals of the Radioactive Decay process, theory and use of counting instrumentation and techniques, statistical analysis of results - St. Joseph's University, Philadelphia, PA (Jan-May 78)	5 months	No	Yes
b. Utilization of Lithium as blanketing material for fusion reactors, removal of tritium from lithium blankets - Argonne National Laboratory, Argonne, IL (Sep-Dec 78)	4 months	Yes	Yes
c. Nuclear and Radiochemistry, Fundamentals of Nuclei and Particles, Nuclear Physics, Subatomic Physics, Fermi theory of beta decay, Neutron Physics, Quantum Theory of Radiation - Washington University, St. Louis, MO (Aug 79 - May 81)	2 years	No	Yes
d. Deformation of nuclei at high spin states, gamma and neutron spectroscopy, Fermi jets, 4" spin spectrometer - Washington University and Oak Ridge National Laboratory (Aug 79 - May 81)	2 years	Yes	Yes
e. Radioactive Waste Disposal - U.S. Ecology, Richland, WA (Dec 83)	24 hours	No	Yes
f. Radioactive Waste Packaging, Transportation and Disposal-Chem Nuclear Systems, Inc., Columbia, SC (May 85)	40 hours	No	Yes
g. Internal Dosimetry of Fixed Nuclear Facilities, Oak Ridge Associated Universities, Oak Ridge, TN (Mar - Apr 87)	40 hours	No	Yes

EXPERIENCE WITH RADIOACTIVE MATERIALS

Isotope	Maximum Activity in Curies	Duration of Experience	Type of Experience
^{3}H	60	5 yrs	For all items, research and experiments, laboratory analysis and wipe tests.
^{14}C	1	2 yrs	
^{32}P	10	2 yrs	
^{35}S	5	2 yrs	
^{45}Ca	0.1	1 yr	
^{51}Cr	1	2 yrs	
^{57}Co	0.03	2 yrs	
^{60}Co	15000	5 yrs	
^{63}Ni	0.1	3 yrs	
^{85}Kr	0.1	5 yrs	
^{90}Sr	0.2	5 yrs	
^{111}In	0.1	1 yr	
^{129}I	5	1 yr	
^{131}I	0.1	1 yr	
^{137}Cs	450	5 yrs	
^{147}Pm	0.3	3 yr	
^{226}Ra	0.03	5 yrs	
^{238}Pu	49	2 yrs	
^{239}Pu	0.1	5 yrs	
^{241}Am	0.05	5 yrs	

EXPERIENCE WITH RADIATION PRODUCING DEVICES

Device	Duration Experience	Type of Experience
a. Oak Ridge National Laboratory Hollifield Heavy Ion Research Facility utilizing Van de Graff and cyclotron	2 yrs	Research
b. Washington University Cyclotron	2 yrs	Research
c. 320KeV X-Ray machine	1 yr	Health Physics

JOSEPH M. SANTARSIERO, Health Physicist
Acting Chief, Radiological Safety Branch
U.S. Army Communications-Electronics Command (CECOM)
Fort Monmouth, NJ 07703-5000

EDUCATION

College: Seton Hall University, East Orange, New Jersey, Biology Program, 1972-1973.

Rutgers, The State University, New Brunswick, New Jersey, BS Degree in Biology, [redacted] Ex 6

Middlesex General Hospital, New Brunswick, New Jersey, Certification in Nuclear Medicine Technology, May 1978.

American Registry of Radiologic Technologists (ARRT).

Certifying Board of Nuclear Medicine Technology (CBNMT).

State of New Jersey Certification - Nuclear Medicine Technology.

Post Graduate: Rutgers, The State University, New Brunswick, New Jersey. Presently completing program of graduate study in Radiation Science (Masters Program).

PROFESSIONAL EXPERIENCE

Oct 1986-Present	Acting Chief, Radiological Safety Branch	USACECOM Fort Monmouth, New Jersey

Responsible for directing and administrating Health Physics/Radiological Safety programs for the life cycle management of CECOM radioactive commodities utilized worldwide; directs/administers the Fort Monmouth Radiation Protection Program for multiple type and quantities of radioactive material; develops and provides guidance and assistance to DoD activities and elements worldwide in the handling, storing and disposal of radioactive materials; provides guidance for and technical review of U.S. Nuclear Regulatory Commission (NRC) license applications and DA Radiation Authorizations for use of radioactive materials in CECOM systems or components thereof; develops technical criteria and provides these data to DA Major Commands to assure compliance with NRC and/or DA Radiation Authorization requirements; assures compliance throughout the Command for ionizing radiation producing devices utilized.

Feb 1984-Oct 1986	Senior Health Physicist	USACECOM Fort Monmouth, New Jersey

Responsible for health physics functions in the establishment and implementation of the CECOM Safety Program aimed at establishing life cycle controls of CECOM commodities utilizing radioactive material and ionizing radiation producing devices; responsible for the evaluation of radiological protection programs and radiation facilities to determine their adequacy and to insure compliance with DA Radiation Authorizations and NRC licenses; perform studies and evaluations necessary to minimize health risks to personnel.

Ex 6/Portions

JOSEPH M. SANTARSIERO
Health Physicist

Jul 1984-Dec 1985	Health Physics Consultant	Porter Consultants, Inc. Ardmore, Pennsylvania

Acted as health physics consultant in Radiation Emergency Planning and in Nuclear Power Plant Radiation Monitoring Systems and Operations. Participated in numerous nuclear reactor facility drill operations as referee/observer.

Sep 1983-Feb 1984	Radiation Physicist	Department of Environmental Protection Trenton, New Jersey

Approved or rejected licenses or amendments for possession and use of radioactive materials after assessment of user qualification, radiation safety program, and compliance with State rules and regulations. Performed inspections and violation investigations of facilities utilizing licensable materials. Conducted special projects evaluating radiation hazards and development of procedures for control and reduction of unnecessary radiation. Investigated violations and incidents, presenting possible radiation hazards with authority to establish improved radiation safety requirements. Member of emergency response team with authority to make immediate decisions relative to public health and safety regarding the control of radiation. Responded to all public and private inquiries involving radioactive materials or nonionizing radiations. Proposed regulations for NJ Administrative Code adoption.

Aug 1982-Sep 1983	Health Physics Consultant	Bio-Med Associates Kenilworth, New Jersey

Acted as health physics consultant to hospitals, doctors, administrators, etc., regarding the safe and proper use of radiation and radioactive material. Determined the requirements of, and designed the shielding for X-ray installations and nuclear medicine departments. Evaluated radiation safety programs, prepared and gave lectures to physicians, nurses, administrators, etc., regarding radiation and radioactivity. Designed areas where radioactive materials are stored and/or used. Performed quality control procedures on X-ray machines and nuclear medicine instruments. Reviewed personnel monitoring records and methods, evaluated personnel performance regarding radiation and its use, performed sealed source leak tests on numerous radionuclides.

May 1978-Aug 1982	Senior Nuclear Medicine Technologist	Monmouth Medical Center Long Branch, New Jersey

Licensed to prepare and administer radiopharmaceuticals for diagnostic imagine of disease in or on human beings. Responsible for the quality control of imaging systems and computers, dose calculation and assay prior to administration, patient orientation to procedures and on-call emergency procedures. Performed various health physics activities, including radiation surveys, air sampling and wipe tests, leak testing of sealed sources, decontamination facilities and equipment, disposal of radioactive wastes, calibration of radiation survey and measurement instrumentation, record-keeping, etc., to insure compliance with NRC and New Jersey State Regulations.

JOSEPH M. SANTARSIERO
Health Physicist

FORMAL TRAINING

Topic	Duration of Training	On-The-Job	Formal Course
(1) Internship in Radiation Health Sciences; Rutgers University, New Brunswick, NJ (1977-1978)*	1 year	Yes	Yes
(2) Radiation and Radioactivity; Rutgers Graduate School of Radiation Science, New Brunswick, NJ (Sep-Dec 1981)	1 semester	No	Yes
(3) Radioactivity and the Environment; Rutgers Graduate School of Radiation Science, New Brunswick, NJ (Jan-Apr 1982)	1 semester	No	Yes
(4) Special Topics in Radiological Health; Rutgers Graduate School of Radiation Science, New Brunswick, NJ (Jan-Apr 1982)	1 semester	Yes	Yes
(5) Radiation Dosimetry; Rutgers Graduate School of Radiation Science, New Brunswick, NJ (Sep-Dec 1982)	1 semester	No	Yes
(6) Radiation Biophysics; Rutgers Graduate School of Radiation Science, New Brunswick, NJ (Jan-Apr 1983)	1 semester	No	Yes
(7) Radiation Chemistry; Rutgers Graduate School of Radiation Science, New Brunswick, NJ (Sep-Dec 1983)	1 semester	No	Yes
(8) Nuclear Emergency Response, State of NJ, Department of Environmental Protection (27, 28 Sep 1983)	16 hours	No	Yes
(9) Instrumentation and Radiation; Rutgers Graduate School of Radiation Science, New Brunswick, NJ (Jan-Apr 1984)	1 semester	No	Yes
(10) Radioactive Materials Transportation; Department of Energy; Chicago, IL (20-24 Aug 1984)	40 hours	No	Yes
(11) Nuclear Energy Technology; Rutgers Graduate School of Radiation Science, New Brunswick, NJ (Sep-Dec 1985)	1 semester	No	Yes

*Course work included: Radiation Detection and Measurement; Nuclear Instrumentation; Radionuclide Chemistry; Radiation Protection; Radiation Biology.

EXPERIENCE WITH RADIOACTIVE MATERIALS:

	Maximum Isotope	Amount	Experience	Type of Use
1.	$^{99}Mo/^{99m}Tc$	2 Ci	5 years	For items 1 through 18, radiopharmaceutical preparation, dose injection, and/or related diagnostic/therapeutic procedures, health physics surveys, wipe test analysis, and instrument calibration.
2.	^{131}I	20 mCi	5 years	
3.	^{75}Se	5 mCi	5 years	
4.	^{67}Ga	50 mCi	5 years	
5.	^{201}Tl	30 mCi	5 years	
6.	^{32}P	40 mCi	5 years	
7.	^{133}Xe	200 mCi	5 years	
8.	$^{81}Rb/^{81m}Kr$	25 mCi	5 years	
9.	^{125}I	50 mCi	5 years	
10.	^{123}I	10 mCi	5 years	
11.	^{137}Cs	130 Ci	7 years	
12.	^{226}Ra	800 mg	5 years	
13.	^{192}Ir	80 Ci	6 months	
14.	^{57}Co	25 mCi	5 years	
15.	^{133}Ba	10 mCi	5 years	
16.	^{51}Cr	25 mCi	5 years	
17.	^{59}Fe	20 mCi	1 year	
18.	^{111}In	3 mCi	5 years	
19.	^{85}Kr	6 mCi	2 years	For items 19 through 21 experience consisted of wipe tests, experiments and evaluations utilizing these sources.
20.	^{90}Sr	200 uCi	2 years	
21.	^{60}Co	100 Ci	4 years.	

STEVEN A. HORNE, Chief, Safety Office
U.S. Army Communications-Electronics Command (CECOM)
Fort Monmouth, New Jersey 07703-5000

EDUCATION

College: Old Dominion University, Norfolk, VA
Associates Degree in Applied Science,

Catholic University, Washington, DC
BSE in Nuclear Science and Engineering,

Ex 6

Post Graduate: Catholic University, Washington, DC
Graduate courses in Nuclear Science and Engineering

PROFESSIONAL EXPERIENCE

May 1986-Present — Chief, Safety Office — CECOM, Fort Monmouth, NJ

Responsible for the command safety program including the overall planning, directing and administering of complex and comprehensive programs encompassing Radiological Safety, Industrial/Occupational Safety, Environmental and System Safety Engineering. Ensures that all management objectives are implemented, to include a comprehensive accident prevention program for the conduction of the OSHA programs for all CECOM and tenant activities at Fort Monmouth. Ensures that the overall safety of developed/deployed CECOM equipments throughout all phases of the life cycle are achieved. Serves as Radiation Control Officer and chief technical advisor to the National Guard Bureau. Designated as the command Review and Materiel Release Board member for the resolution, correction and ultimate approval for safety release of equipment. Develops and sets office objectives/policies, and supervises/provides professional leadership for up to 38 personnel of various disciplines. Serves as the technical advisor and consultant to the Commanding General, Command Group and senior management on all safety program aspects.

May 1982 - May 1986 — Supervisory Safety Engineer, Safety Office — CECOM, Fort Monmouth, NJ

Manage and direct the Environmental, Radiological & System Safety Engineering programs to ensure the overall safety of equipment throughout all phases of life cycle management. Designated Senior Review Board member to approve safety of equipment prior to fielding. Develops, initiates and administers programs to ensure overall safety management objectives. Sets division policy, goals and objectives and ensures programs are implemented to meet all requirements. Serves as senior technical advisor to the Commander and top management on all programs and problems associated within assigned responsibility.

Ex 6

October 1981 - May 1982	Supervisory Health Physicist Safety Office	CECOM Fort Monmouth, NJ

Direct and supervise the Materiel Readiness Division, which includes both Health Physics and System Safety Engineering programs to ensure overall safety of CECOM commodities throughout life cycle management. Maintain continuous surveillance over assigned weapon systems, provide advice, guidance and assistance on specific problem areas. Develop and implement corrective actions in the form of new policies, direction, improved methods and procedures.

March 1976 - October 1981	Senior Health Physicist Safety Office	CECOM Fort Monmouth, NJ

Responsible for the establishment, implementation and the overall accomplishment of the command's health physics program. Responsibility includes the development, initiation and administration of programs to assure life cycle management control of numerous ionizing and nonionizing commodities. Perform investigations and special radiological engineering studies relative to safety in the life cycle management of all assigned commodities. Conducts reviews and evaluations of equipment to determine maximum safety and/or to provide recommendations for required safety improvements. Evaluate test plans, reports and provides recommendations relating to the safety deficiencies and/or shortcomings.

November 1972 - March 1976	Health Physicist Safety Office	USAMERADCOM Fort Belvoir, VA

Responsible for the overall accomplishment of both the USAMERDC and USANVL Radiation Protection Programs. Performed both basic and applied health physics. These studies and evaluations included all safety aspects of equipment through all phases of life cycle, hazard analysis and general guidelines for safe design and use of equipment. Performed contractor evaluations and certified industrial companies for compliance to Federal, DA, DARCOM safety requirements and for the analysis of same. Furnished technical advice and guidance to other DARCOM MSC's and laboratories.

October 1970 - November 1972	Health Physicist Safety Office	USAMERDC Fort Belvoir, VA

Designated as the Principal Staff Officer for the direction, coordination and performance for the overall accomplishment of USAMERDC's Radiation Protection Program. Responsibility included both Atomic Energy Commission Byproduct, Source and Special Nuclear Materiel Licenses and DA Authorizations, radiological equipment studies and evaluations on all ionizing equipment. Reviewed all technical manuals and bulletins for applicable radiation safety requirements. Furnished technical advice and guidance to all engineers and scientists.

Formal Course	Topic	Duration of Training	On the Job	
a.	Fifty-six semester hours pertaining to radiation, including college physics, Environmental Aspects of Nuclear Power Plant Management, Environmental Radioactivity, Nucleonic Fundamentals, Nuclear Properties and Interactions, Nuclear Physics, Nuclear Radiation Detection, Nuclear Reactor Physics, Radiation Biology, Radioisotope Techniques and Radiological Physics - Old Dominion University and the Catholic University of America.	1961-1975	No	Yes
b.	Radiation Detection Effects and Devices Utilizing various types of high energy accelerators - Virginia Associated Research Center Newport News, Virginia, and NASA Langley Research Center, Langley, Virginia.	1 year	Yes	No
c.	Radiation Safety, detection instrumentation and isotopic handling equipment - Flow Corp, Fort Belvoir, Virginia.	2 Months	Yes	No
d.	Radiological Safety Course pertaining to Nuclear Moisture/ Density Instrumentation - Seaman Nuclear Corporation, Milwaukee, Wisconsin.	24 Hours	No	Yes
e.	Occupational Radiation Protection Course 212 - Public Health Services, Las Vegas, Nevada.	80 Hours	No	Yes
f.	Fundamentals of Non-Ionizing Radiation Protection Course 264 - Public Health Service, Rockville, Maryland.	40 Hours	No	Yes
g.	Laser Safety Course - University of Cincinnati, Ohio	40 Hours	No	Yes

h. Radionuclide Analysis by Gamma Spectroscopy Course 208 - Public Health Services, Winchester, Massachusetts.	80 Hours	No	Yes
i. Radiation Guides and Dose Assessment Course 272 - Environmental Protection Agency, Las Vegas, Nevada.	80 Hours	No	Yes
j. Boiling Water Reactor Technology Course - Public Service Gas and Electric Company, Salem, New Jersey.	64 Hours	No	Yes

Experience with Radioactive Materials

Isotope	Maximum Activities in Curies	Duration of Experience	Type of Experience
^{241}Am	1	3 Years	For all radionuclides listed, experience consisted of laboratory analysis, wipe tests, experiments and evaluations utilizing these sources.
^{252}Cf	.27	3 Years	
^{57}Co	0.1	4 Years	
^{60}Co	1200	8 Years	
^{137}Cs	1	8 Years	
^{3}H	20	8 Years	
^{192}Ir	100	8 Years	
^{147}Pm	1	8 Years	
$^{226}RaBe$	1	5 Years	
$^{239}PuBe$	1	1 Year	
^{90}Sr	0.2	2 Years	

Experience with Radiation Producing Devices

Device	Duration of Experience	Type of Experience
a. NASA Langley Research Center, and Virginia Associated Research Center's, Space Radiation Effects Laboratory consisting of a 2 MeV Van de Graaff accelerator, 3 MeV Dynamitron accelerator, 10 MeV Linear Electron Accelerator, a 600 MeV Proton Synchrocyrlotron Accelerator and a 14 MeV Neutron Generator.	1.5 Years	Radiation damage Shielding Experiments and Related Health Physics Studies.
b. 250 KeV General Electric Corporation X-ray machine.	8 Years	Health Physics and laboratory experiments.
c. Various energy dispersive and wave length X-ray fluorescence spectrometry with X-ray generators up to 50 KeV.	8 Years	Health Physics and laboratory experiments.

Supplement D

1. Reference: Item 8, NRC Form 313.

2. The use of radioactive material at Fort Monmouth is limited to:

   a. CECOM Safety Office Health Physics Staff.

   b. Individuals approved by the Fort Monmouth Radiation Control Committee (RCC).

3. The Fort Monmouth RCC is composed of members of the CECOM Safety Office, representatives of research/development and installation medical and engineering activities which utilize radioactive material, and the Commander's representative. The purpose of the RCC, in part, is to advise the Commander, CECOM, on the safe utilization of radioactive material at Fort Monmouth. The RCC reviews and has approval authority over all radiological permits and license applications relating to research/development projects at Fort Monmouth. The qualifications of personnel authorized to conduct research activities which require the use of radioactive materials are reviewed/approved by the RCC. Approved radiation workers receive training in basic radiation safety from the Radiological Safety Branch of the CECOM Safety Office prior to the initial work assignment. Annual training of radiation workers will be conducted by the RPO and/or qualified designee in accordance with the requirements of Title 10, Code of Federal Regulations (10 CFR), Part 19.

RECORD OF ENVIRONMENTAL CONSIDERATION

TITLE: U.S. Nuclear Regulatory Commission License Application

DESCRIPTION:

1. The U.S. Army Communications-Electronics Command (CECOM) as proponent for the U.S. Army in Research and Development of electronics and optical systems, has prepared subject pool irradiator license application.

2. This document covers the life cycle of subject material to include use, storage, possession, transportation and disposal.

DETERMINATION:

1. It has been determined that the above item/action qualifies as categorically excluded (paragraph A-11 and A-28, Appendix A, AR 200-2) from the requirements for an Environmental Assessment or an Environmental Impact Statement. The extraordinary circumstances defined in paragraph 4-3 or AR 200-2 do not apply.

2. Additional supporting information is available in the license application package.

3. Implementation of the proposed action is not expected to result in a significant adverse impact on the existing human environment, nor is it expected to be environmentally controversial.

PROPONENT OFFICE: CECOM Safety Office

RESPONSIBLE OFFICIAL: Joseph Furia DATE: 8 June 87

ENVIRONMENTAL COORDINATOR: for Louis Soffer DATE: 8 June 87

REVIEWED BY: Christopher Kencik DATE: 8 June 87

APPROVED BY: STEVEN A. HORNE, Chief, Safety Office DATE: 10 June 87

SECURITY VERIFICATION: THIS DOCUMENT HAS BEEN REVIEWED IN FULL CONSIDERATION OF THE REQUIREMENTS OF OPERATIONS SECURITY (OPSEC) AND HAD BEEN DETERMINED TO BE ACCEPTABLE FOR PUBLIC RELEASE.

Supplement E

1. Reference: Item 9, NRC Form 313.

2. The Co-60 pool irradiator is located in building 401, Evans Area. The Evans Area is located approximately ten miles south of the Charles Wood Area, in Wall Township, Monmouth County and is completely surrounded by a twelve foot high security fence. Access to the area is restricted and monitored by DoD security officers. The Evans Area contains laboratories and open air test areas devoted to the research and development of electronic and optical systems for DA use and is also the location of the CECOM Safety Office satellite Health Physics Laboratory. The Evans Area branch of the Fort Monmouth Fire Department has a 2-3 minute response time to all facilities within the area.

b. Provided at enclosures 1 and 2 are diagrams of building 401 indicating the location of the pool irradiator. The pool tank is manufactured of 1/4" stainless steel and measures 10 feet in diameter by 20 feet deep. Water in this tank is circulated through filters, deionized and cooled. At the bottom of the main tank is the emergency holding tank measuring 20 inches in diameter by 48 inches deep. In the unlikely event of repairs being needed to the main tank, the sources can be placed into the emergency holding tank for temporary storage. In this configuration, a 17 inch lead plug caps the emergency holding tank, with a 6 inch lead collar placed over the plug. The plug and collar can be lowered into the pool utilizing the six ton overhead bridge crane located in the facility. The roof immediately above the pool is removable to allow access for a larger, external crane, if necessary. At enclosure 3 is a diagram of the source exposure holder, which houses the Co-60 sources in their normal configuration.

c. Emergency systems for the pool irradiator include the emergency holding/storage tank, water level alarm and radiation alarms. The emergency storage tank is described in paragraph 1b above. The water level alarm is set to emit an audible and visual alarm in the event the water level drops more than six inches. Should water loss occur, a 2 inch fill pipe located between the top of the pool and the outside of building 401 is provided. The Fort Monmouth Fire Department can connect the fill pipe to a fire hydrant less than 100 feet away to provide emergency water filling of the pool. Three radiation monitors, Eberline Model DA1, as part of the Eberline Model RMS II Area Radiation Monitoring System, are used in the pool facility. One monitor is located at the deionizer, one is six inches above the pool water, and one at the pool facility entrance. Radiation levels at any location within the facility are continuously monitored and remain below 2 mR/hr.

3. At enclosure 4 is a listing of radiation detection instrumentation utilized by the CECOM Safety Office. All survey instruments are calibrated in accordance with the procedures outlined in Technical Bulletin (TB) 9-6665-285-15, Army Calibration Program for Radiac Survey Meters and TB 750-25-1, Maintenance of Supplies and Equipment: Army Test Measurement, and Diagnostic Equipment (TMDE) Calibration and Repair Support Program. These procedures state that all active survey instruments will be calibrated ever 90 days, at two points on each scale. Each point must be separated by at least 50 percent of the maximum scale + 10 percent of the standards calculated value. Beta and gamma survey instruments are calibrated using the AN/UDM-1A Radiac Calibrator Set containing Cesium-137

Cesium-137 or Cobalt-60, respectively. Alpha survey instruments are calibrated using the AN/UDM-6 or AN/UDM-7 Radiac Calibrator Sets containing Plutonium-239. Each Radiac Calibrator Set is traceable to the National Bureau of Standards (NBS). Neutron survey instruments are calibrated at the U.S. Army Ionizing Radiation Dosimetry Center (AIRDC), Lexington, KY, utilizing a Plutonium-239 Beryllium source traceable to or certified by NBS. Fixed radiation counting systems are calibrated prior to use utilizing NBS traceable check sources. The liquid scintillation system is calibrated monthly utilizing a set of NBS traceable tritium quenched standards.

4. All personnel classified as radiation workers in accordance with 10 CFR 20 and Army Regulation (AR) 40-14, Control and Recording Procedures for Exposure to Ionizing Radiation and Radioactive Materials, 15 March 1982, are provided thermoluminescent dosimeters, whole body, wrist and/or neutron film badges, as appropriate. The dosimetry service is provided by AIRDC, Lexington, KY. Dosimeters are exchanged monthly, with records maintained by the CECOM Safety Office and AIRDC.

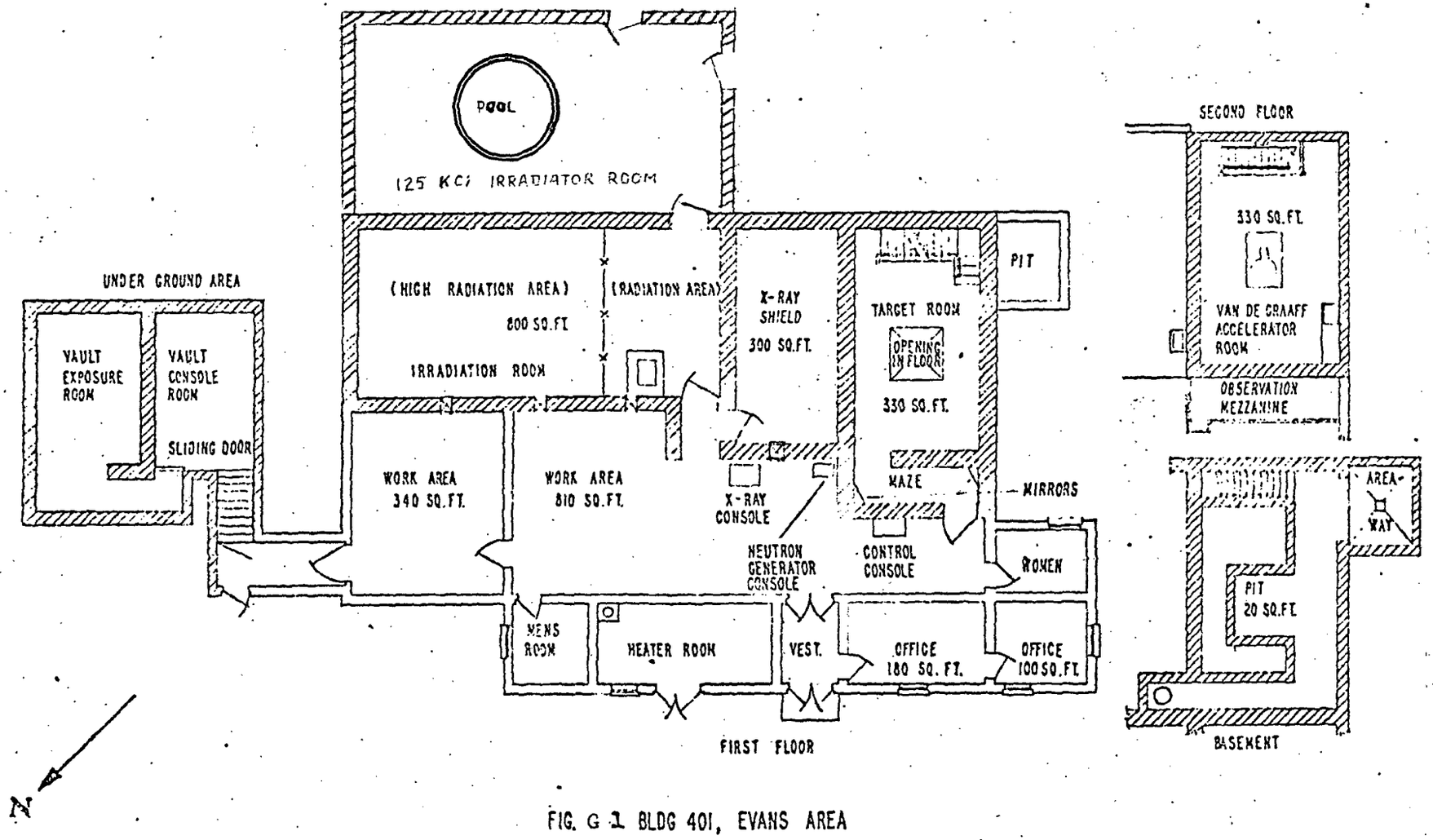

FIG. G 1 BLDG 401, EVANS AREA

Enclosure 1

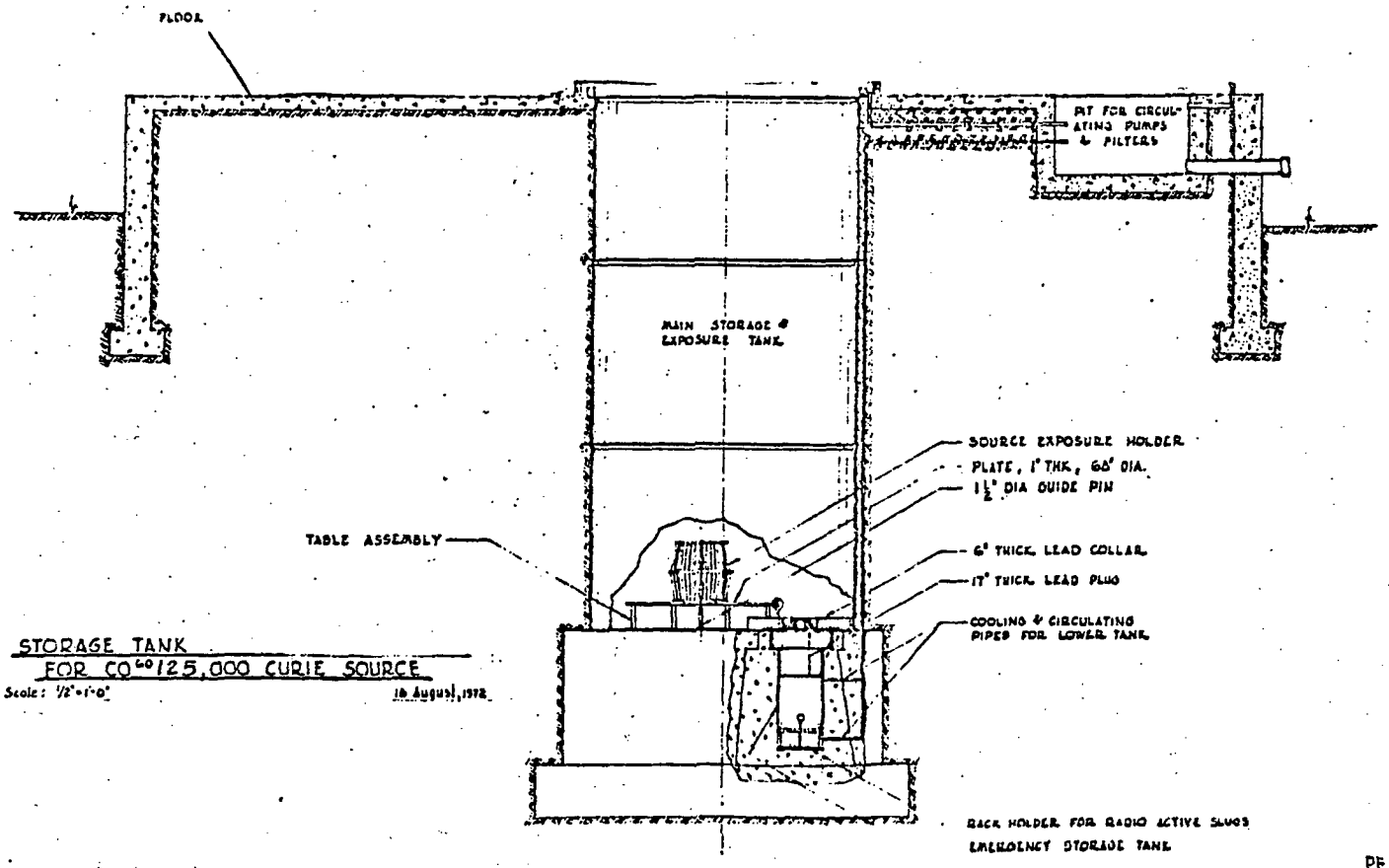

STORAGE TANK
FOR Co^{60} 125,000 CURIE SOURCE

Scale: 1/2" = 1'-0" 16 August, 1958

PF-F-2834
Co^{60} FAC.
EVANS AREA

FIG. 2

REVISIONS			
LTR	DESCRIPTION	DATE	APPROVE

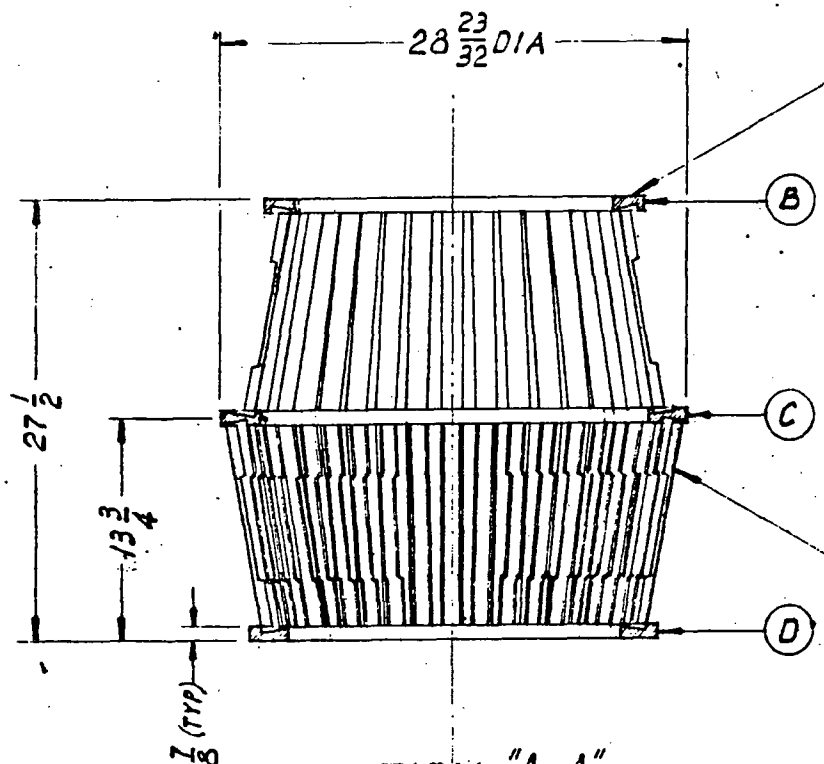

SECTION "A-A"

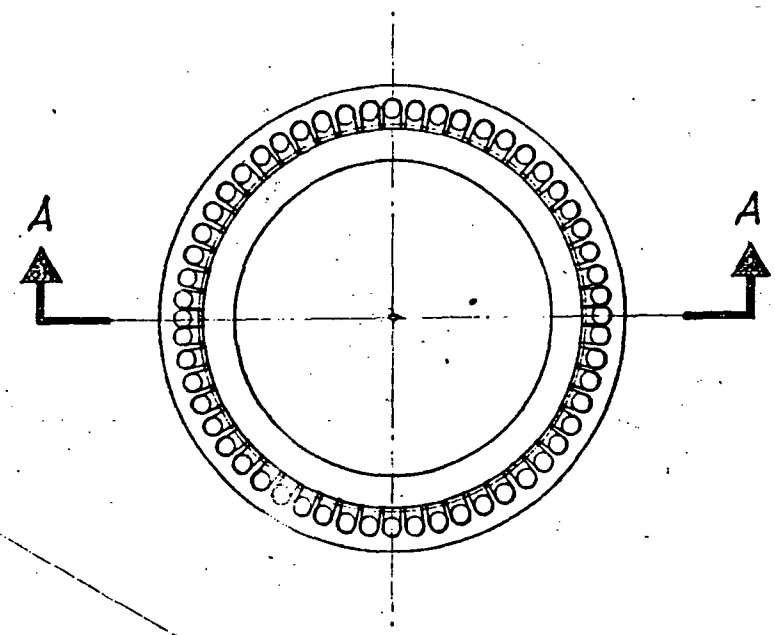

1/16 THK WALL ALUM ALY TUBE, 1.250 I.D.
CUT AS SHWN, 55 REQ, BOTTOM SECTION
55 REQ, TOP SECTION, TOTAL, 110

SCHEDULE OF DIAMETERS			
RING	O.D.	I.D.	PITCH CIRCLE DIA
B	23 7/16	19 41/64	21 35/64
C	28 23/32	24	25 15/16 TOP 26 13/16 BOT
D	24 13/16	20 33/64	22 27/64

ITEM NO.	QTY REQD	PART OR IDENTIFYING NUMBER	NOMENCLATURE OR DESCRIPTION	SPECIFICATION	NOTE
			~~PARTS LIST~~		

UNLESS OTHERWISE SPECIFIED
DIMENSIONS ARE IN INCHES
TOLERANCES ON
FRACTIONS ——
DECIMALS ——
ANGLES ——

NEXT ASSY | USED ON
APPLICATION

AUTHENTICATION
DRAWN D.B.
CHECKED
VERIFIED
APPROVED
DATE 21 SEPT., 72

U. S. ARMY ELECTRONICS COMMAND
RESEARCH AND DEVELOPMENT LABORATORIES
FORT MONMOUTH, NEW JERSEY 07703

OUTLINE DIMENSIONS
SOURCE EXPOSURE HOLDER

SIZE B | CODE IDENT NO. 20309 | ES-B-211863
SCALE 1/3 | — | SHEET —

WHEN REFERRING TO THIS DRAWING STATE DRAWING NO. APPLICABLE ISSUE LETTER, IF ANY, & DAT

1. Hand held instruments:

Instrument	Type	Range
Ludlum #5	Geiger Counter	0-2000 mR/hr
Keithley #36150	Integrating Survey Meter	0-20 R/hr
Ludlum #28	Ratemeter	0-500,000 cpm[1]
Victoreen #440	Low Energy Survey Meter	0-300 mR/hr
Victoreen #NP-2 (neutron)	Neutron Survey Meter	0-2000 mR/hr (neutron)
Victoreen #440 RF/A	Shielded Low Energy X-Ray Survey Meter	0-300 mR/hr
Eberline PIC-6A	Portable Ion Chamber	0-1000 R/hr
Eberline PRM-5-3	Pulse Rate Meter	0-500,000 cpm[2]
Eberline PRS-1	Portable Rate Meter	N/A[2]
Dosimeter Corp Model DRD #862	Pocket Dosimeter	0-200 mR
Eberline ESP-1	Portable Rate/Survey Meter	N/A[2]

[1]Probes available include Model 44-9 (Pancake GM)

[2]Probes available include: AC-3 (Alpha Scintillation), HP-210 (Pancake GM), HP-270 (GM), PNR-4 (now NRD-neutron), LEG-1 (Gamma), SPA-3 (Scintillation)

2. Fixed radiation counting systems:

a. Packard TriCarb 1500 Liquid Scintillation Counter

b. Tennelec Model 5110 Low Background Alpha/Beta Counter

c. Harshaw Model TASC 12 Alpha/Beta/Gamma Counter

d. Canberra Series 35 Plus Multichannel analyzer

Supplement F

1. Item 10, NRC Form 313.

2. The radiation protection program at Fort Monmouth is under the management of the CECOM Safety Officer on behalf of the Commander, CECOM. CECOM Regulation 385-18 (enclosure 1), establishes policies, responsibilities, and procedures for possession/use of radioactive materials at Fort Monmouth.

3. The completion of a radiological permit application is required of all potential users of radioactive material at Fort Monmouth. In this document, the researcher indicates radioactive materials required, available facilities for research, safety equipment available, training/experience of research personnel and provides a standard operating procedure. The application is reviewed by the RPO for completeness and accuracy, and a recommendation for approval/disapproval is given to the RCC. The RCC has final approval/disapproval authority.

4. The RPO insures that monthly inspections of all facilities where radioactive material are used and/or stored are performed and results maintained. Included in these inspections are radiation surveys, wipe tests (where appropriate), evaluation of shielding procedures, postings and overall adherence to required regulations.

5. At enclosure 2 is the Standard Operating Procedure for the use of the CO-60 pool facility.

HEADQUARTERS
U.S. ARMY COMMUNICATIONS-ELECTRONICS COMMAND
FORT MONMOUTH, NEW JERSEY 07703-5000

CECOM REGULATION
No. 385-18 19 March 1987

Safety

IONIZING RADIATION PROTECTION PROGRAM

Issue of changes to this regulation by other CECOM elements is prohibited unless specifically approved by Commander, CECOM, ATTN: AMSEL-SF-RIR.

	Paragraph	Page
Purpose	1	1
Scope	2	1
References	3	1
Terms	4	2
Policy	5	2
Responsibilities	6	2
Licensing of R&D Projects	7	3
Procedures	8	4
Appendix A. Terms		A-1
B. Radiological Permit Application/Supplement		B-1
C. Dosimeter Application and Record of Radiation Exposure		C-1
D. Record of Occupational Exposure to Ionizing Radiation		D-1
E. Radioactive Material Movement Form		E-1

1. Purpose. This regulation establishes policy, procedures, and responsibilities for the use of ionizing radiation sources at the U.S. Army Communications-Electronics Command (CECOM), Fort Monmouth.

2. Scope. This regulation applies to all activities utilizing ionizing radiation sources at Fort Monmouth.

3. References. Related references are as follows:

a. AR 40-14 (Control and Recording Procedures for Exposure to Ionizing Radiation and Radioactive Materials).

b. AR 385-11 (Safety, Ionizing Radiation Protection (Licensing, Control, Transportation, Disposal, and Radiation Safety)).

c. AR 700-64 (Radioactive Commodities in the DOD Supply System).

d. Title 10, Code of Federal Regulations (Energy).

e. Title 49, Code of Federal Regulations (Transportation).

4. Terms. Special terms are explained in appendix A.

5. Policy. The utilization of ionizing radiation sources will be conducted in such a manner that the radiation dose to user personnel will be kept as low as reasonably achievable in accordance with the guidelines set forth by the U.S. Nuclear Regulatory Commission (NRC).

6. Responsibilities. a. The Commanding General, CECOM, will:

(1) Publish guidance on the safe use, storage, maintenance, transportation, and disposal of ionizing radiation sources.

(2) Procure and maintain all necessary licenses, authorizations, and permits for the use of ionizing radiation sources.

(3) Establish a Radiation Control Committee (RCC) in accordance with AR 385-11 which will advise the Commander on matters pertaining to radiation protection for the purpose of ensuring that ionizing radiation sources are utilized in a safe manner.

b. The RCC will:

(1) Advise the Commanding General, CECOM, on policies and procedures for the safe use, handling, maintenance, transportation, and disposal of ionizing radiation sources.

(2) Review applications for NRC licenses and Department of the Army Radiation Authorizations (DARA).

(3) Review and approve all applications for Radiological Permits.

c. The Chief, Safety Office, will:

(1) Implement and maintain the Fort Monmouth Radiation Protection Program (RPP).

(2) Provide a Radiation Protection Officer (RPO) and at least one alternate RPO (ARPO) for both the RPP and NRC licenses/DARAs.

(3) Provide technical guidance on the safe procurement, use, storage, maintenance, and disposal of ionizing radiation sources.

(4) Obtain all NRC licenses and DARAs necessary to conduct approved Research and Development (R&D) operations for R&D activities.

(5) Serve as license manager for all NRC licenses/DARAs issued to CECOM.

d. The RPO and ARPO will:

(1) Administer the RPP.

(2) Provide safety guidance to users of ionizing radiation sources.

(3) Maintain all necessary NRC licenses and DARAs for R&D activities at Fort Monmouth.

(4) Conduct monthly evaluations of R&D activities utilizing ionizing radiation sources.

(5) Evaluate all applications for Radiological Permits for RCC review/approval.

(6) Maintain all records on the utilization of ionizing radiation sources required by the NRC, Department of Defense, Department of the Army, Department of Transportation, U.S. Army Materiel Command, and all other applicable agencies.

e. Directors of R&D activities will:

(1) Ensure that all R&D projects in their activity involving the utilization of ionizing radiation sources are conducted in full compliance with all applicable regulations and standing operating procedures (SOP).

(2) Appoint one primary and one alternate member to the RCC.

f. Researchers/engineers will:

(1) Develop SOPs for the safe utilization of ionizing radiation sources under their control, subject to RCC approval.

(2) Ensure all activities under their control are conducted in a safe manner in full compliance with all applicable regulations.

7. <u>Licensing of R&D Projects</u>. a. Licensing and Permits:

(1) All R&D projects requiring the acquisition of radioactive material will notify the CECOM Safety Office (CSO)

at least 9 months prior to start-up to ensure the procurement of the necessary NRC licenses, DARAs, and/or amendments. Information provided must include source design, radionuclide activity, facilities, and a description of the research project/proposed use.

(2) Only the CSO may obtain NRC licenses/amendments and DARAs/amendments for activities utilizing radioactive materials/sources at Fort Monmouth.

b. Radiological Permits:

(1) All researchers requiring the use of radioactive material and/or ionizing radiation producing devices will, at least 3 months prior to start-up, submit to the CSO a completed Radiological Permit application (see sample at app B).

(2) Additionally, researchers will submit an SOP to the CSO for the use of the radioactive material/ionizing radiation producing device. The SOP will contain information on the safe handling and use of the isotope(s)/device(s), storage, disposal, and personnel protection.

(3) Applications must be approved by both the CSO and the RCC. Prior to approval, the RPO or designee will conduct a preliminary survey of the work site.

(4) All research work must be conducted in accordance with the Radiological Permit and SOP.

(5) Changes/modifications of either the Radiological Permit or SOP must be approved, in writing, by the RPO and be concurred with by the RCC.

(6) At the termination of the research project, all radioactive materials will be turned in to the RPO for storage and/or disposal and the facility will be returned for unrestricted use.

8. Procedures. a. Personnel Dosimetry:

(1) Personnel involved in handling or use of ionizing radiation sources will utilize personnel monitoring devices as prescribed by the RPO.

(2) Personnel requiring film badges will submit to the RPO a completed DD Form 1952 (Dosimeter Application and Record of Occupational Radiation Exposure) (see app C).

(3) Exposure records will be kept on DD Forms 1141 (Record of Occupational Exposure to Ionizing Radiation) (see app D) by the CSO in accordance with AR 40-14.

(4) Bioassays will be conducted, as applicable, by the Medical Officer and RPO at an interval not to exceed 3 years.

b. Surveys:

(1) Health physics surveys of areas where ionizing radiation sources are utilized will be conducted monthly by the RPO or qualified designee.

(2) Wipe tests will be conducted monthly by the RPO or qualified designee in those areas where unsealed radioisotopes are used and/or stored.

(3) Periodic leak testing of sealed sources of radioactive material will be conducted by the RPO or qualified designee at a frequency determined by the applicable NRC license/DARA.

(4) Surveys will include determination as to adequacy of personnel protection, adherance to operating procedures, record keeping, etc.

c. Procurement:

(1) All requests for the procurement of radioactive material will be routed through the RPO to ensure that the proper NRC license/DARA is available.

(2) No procurement of ionizing radiation sources are authorized without an approved Radiological Permit (see para 7b above).

d. Transportation:

(1) All incoming/outgoing shipments of radioactive material must be surveyed and wipe tested by the RPO or qualified designee.

(2) Currently, all shipments enter/leave Fort Monmouth through Building 116. Any radiological shipments arriving/leaving Fort Monmouth from some other location must be coordinated with both the Transportation Division and the RPO/Radiological Safety Branch, CSO.

(3) In addition to all other records required, each shipment of radioactive material must include one copy of a Radioactive Material Movement form (app E) signed by the RPO or designee.

e. Disposal:

(1) All disposal of radioactive material must be coordinated with the RPO.

(2) Only the CSO may request disposition instructions from the U.S. Army Armament, Munitions, and Chemical Command.

(3) Currently, Buildings T-383 and 45, Evans Area, are the only approved radioactive waste storage areas at Fort Monmouth. No additional storage areas will be authorized without the written approval of the RPO and RCC.

f. Instrumentation: The RPO will maintain radiological detection instrumentation sufficient to detect all of the types of radiation present at FM.

g. Training:

(1) Operational training of personnel in the use of ionizing radiation sources is the responsibility of the individual(s) issued the authorizing Radiological Permit. Experience and training of researchers is to be included on the Radiological Permit (see para 7b above).

(2) Annual training required under Title 10, Code of Federal Regulations (CFR) 19, of all personnel involved in the use, storage, transportation, maintenance, and disposal of ionizing radiation sources will be conducted by the RPO or qualified designee. Personnel failing to attend this training will not be permitted to continue using ionizing radiation sources.

(3) Annual training will include, but is not limited to, a review of the rules and regulations contained in Title 10, CFR, Parts 19, 20, and 21, and this regulation.

h. Emergency Procedures:

(1) Any accident or incident involving the loss of radioactive materials, contamination of property, contamination of personnel, or exposure of personnel to more than 100 millirem (mrem) in 1 week will be reported to the RPO within 1 hour by telephonic means (notification will be made to the staff duty officer within 1 hour during off-duty hours).

(2) Decontamination of facilities will be supervised by the RPO or qualified designee.

(3) Decontamination of personnel will be supervised by the RPO and Medical Officer.

(4) In any emergency situation, priority must be given to minimizing risk to personnel. Secondary to this is the protection of property.

Appendix A

TERMS

ALARA. An acronym for "as low as reasonably achievable;" refers to an operating philosophy in which occupational exposures are reduced as far below specified limits as is reasonably achievable.

Contamination (radioactive). The deposition of radioactive material in any place where it is not desired, and particularly in any place where its presence might be harmful.

Curie (Ci). A unit of activity. One Ci equals 3.700 E10 nuclear transformations per second. A microcurie (uCi) equals one-millionth of a curie (3.7 E04 disintegrations per second or 2.22 E06 disintegrations per minute).

DARA. Department of the Army Radioactive Material Authorization or Permit, DA Form 3337.

Decontamination. The reduction or removal of radioactive contamination from any given surface.

Dose. A general term denoting the quantity of radiation or energy absorbed.

Exposure (occupational). Exposure to ionizing radiation incurred by an employee whose duties may result in such exposure. It does not include exposures that are incident to medical or dental diagnosis or therapy.

Film Badge. A pack of appropriate photographic film and filters used to determine radiation exposure.

Ionizing radiation. Electromagnetic or particulate radiation capable of producing ions, directly or indirectly, in its passage through matter. For purposes of this regulation, alpha and beta particles, gamma rays, x-rays, and neutrons are examples of ionizing radiation. This type of radiation does not include sound or radiowaves, infrared, visible, or ultraviolet light, or lasers.

Ionizing radiation producing devices. Electronic devices that are capable of making ionizing radiation. Examples are x-ray machines, linear accelerators, electron microscopes, cyclotrons, and radio frequency generators that use klystrons, magenetrons, or other tubes that produce x-rays.

Leak test. A determination of the integrity of a sealed source encapsulation by measurement of the amount of radioactive material escaping the encapsulation.

Appendix A--Continued

Licensed material. Source, special nuclear, or by-product material received, stored, possessed, used, or transferred under a general or specific license issued by the NRC.

License (specific). A document issued by the NRC under 10 CFR that gives the right to the bearer to procure, receive, store, transfer, use, export, and import specified radioactive items under specific terms.

Rad. The unit of absorbed dose equal to 0.01 Joules/kilogram in any medium.

Radiation. Emission of energy through space in the form of waves or particles.

Radiation Control Committee (RCC). A group of qualified personnel officially appointed by a commander to set local policy and to guide the radiation protection program.

Radiation Protection Officer (RPO). An individual designated by the commander to provide consultation and advice on the degree of hazards associated with radiation and the effectiveness of measures to control these hazards. This individual shall be technically qualified by virtue of education, training, and/or professional experience to assure a capability commensurate with the type and hazard of the radiation sources for which he/she is responsible. (The term "Radiation Protection Officer" is a functional title and is not intended to denote a commissioned status or job classification.)

Radiation sources. Materials or devices that make or are capable of generating radiation, including:

a. Naturally occurring radioactive materials.

b. By-product materials.

c. Source materials.

d. Special nuclear materials.

e. Fission products.

f. Materials containing induced or deposited radioactivity.

g. Radiographic and fluoroscopic equipment.

h. Particle generators and accelerators.

i. Electronic equipment that uses klystrons, magnetrons, or other electron tubes that produce x-rays.

Appendix A--Continued

Radiation survey. An evaluation of the radiation hazard associated with the production, use, release, storage, or presence of radiation sources under a specific set of conditions, and the adequacy of required protective measures.

Radiation worker. Any person occupationally exposed to ionizing radiation and/or radioactive materials.

Radioactive material. Any material or combination of materials that emits ionizing radiation. This includes natural elements such as radium and accelerator-made radionuclides.

Radioactive waste. Includes the following:

a. Property contaminated to the extent that decontamination is economically unsound.

b. Surplus radioactive material whose sale, transfer, or donation is prohibited.

c. Surplus radioactive material that is determined to be unwanted after being advertised as surplus.

d. Waste that is radioactive due to production, possession, or use of radioactive material.

Rem. A special unit of dose equivalent. The dose equivalent in rems is numerically equal to the absorbed dose in rads multiplied by the quality factor and any other necessary modifying factors.

Sealed source. Any radioactive material that is permanently bonded or fixed in a capsule or matrix designed to prevent the release or dispersal of such radioactive material under the most severe conditions that may be encountered in normal use or handling.

Survey (radiation). Evaluation of the radiation hazard incident to the production, use, or existence of radioactive materials, or other sources of radiation under specific conditions. The evaluation usually includes:

a. A physical survey of the disposition of materials and equipment.

b. Measurements or estimates of the levels of radiation involved.

c. Predictions of hazards resulting from expected or possible changes in materials or equipment.

d. Determination of required corrective measures.

Appendix A--Continued

Wipe Test. A procedure in which a swab or piece of absorbent material (paper or cloth) is rubbed on a surface and its radioactivity measured to determine if the surface is contaminated with removable or non-fixed radioactive material.

X-rays. Penetrating electromagnetic radiation whose wavelengths are shorter than visible light. They are usually produced by bombarding a metallic target with fast electrons in a high vacuum. In nuclear reactions, photons that originate in the nucleus are called gamma rays. In atomic reactions, photons that originate from the electronic orbits are called x-rays.

Appendix B

RADIOLOGICAL PERMIT APPLICATION

DATE	NEW	AMENDMENT

TO: SAFETY OFFICE AMSEL-SF-RIR	FROM:
RESPONSIBLE INVESTIGATOR _____	AREA SUPERVISOR _____

RADIOISOTOPES AND/OR DEVICES TO BE USED

ELEMENT & MASS NUMBER	CHEMICAL FORM	PHYSICAL FORM	ACTIVITY (mCi)

LOCATION(S) OF USE

BUILDING	ROOMS

OTHER USER PERSONNEL

Appendix B--Continued

RADIATION DETECTION INSTRUMENTATION

NOMENCLATURE	RANGE	RADIATION DETECTED	QUANTITY

DESCRIPTION OF OPERATING PROCEDURES/SAFETY PROCEDURES

FACILITIES DESCRIPTION (INCLUDING STORAGE AREAS, SHIELDING, SAFETY DEVICES)

SIGNATURE OF DIVISION CHIEF/DIRECTOR

Appendix B--Continued

SUPPLEMENT
RADIOLOGICAL PERMIT APPLICATION

NAME:

EXPERIENCE WITH RADIOISOTOPES/IONIZING RADIATION PRODUCING DEVICES

ISOTOPE	ACTIVITY	LOCATION	DURATION

Appendix C

Ex6

DOSIMETER APPLICATION AND RECORD OF OCCUPATIONAL RADIATION EXPOSURE

Print legibly or type all information requested. See Privacy Act Statement on reverse.

1. FULL NAME (Last, First, Middle) [redacted]	2. DATE OF BIRTH (YYMMDD) [redacted]	3. SOCIAL SECURITY NO. [redacted]
4. DUTY SECTION (Dept., Ward, Unit, etc.) Research Laboratory	5. JOB TITLE Chemist	6. DUTY PHONE 283-1814
7. PAY GRADE — CIVILIAN GS-12 / MILITARY	8. HAVE YOU WORN A DOSIMETER ISSUED BY THIS COMMAND IN THE PAST ☐ YES ☒ NO	9. DATE OF RADIATION PHYSICAL (YYMMDD) 81-05-01
10. DUTY STATUS ☒ PERMANENT ☐ TRANSIENT 6 WEEKS OR LESS	IF TRANSIENT SHOW MAILING ADDRESS (street address, city, state, zip code) OR LOCATION OF HEALTH RECORDS	

EXPOSURE INFORMATION *(ITEMS 11 THROUGH 20 FOR HEALTH PHYSICS USE ONLY)*

11. CLASSIFICATION OF EXPOSURE: ☒ EXTERNAL ☐ NEUTRON ☐ INTERNAL

12. BADGES REQUIRED: ☐ WRIST ☒ WHOLE-BODY ☐ NEUTRON

13. TLD REQUIRED: ☐ WRIST ☐ WHOLE-BODY ☐ FINGER

14. BIOASSAYS REQUIRED: WHOLE-BODY COUNT ☐ YES ☐ NO; THYROID UPTAKE ☐ YES ☐ NO; URINALYSIS ☐ α ☐ β ☐ β-γ; FREQUENCY ☐ MONTHLY ☐ QUARTERLY ☐ ANNUALLY

GIVE DATES FOR ITEMS 15 THROUGH 20 (YYMMDD)

15. DOSIMETER(S) ISSUED 81-05-03	16. DD FORM(S) 1141 INITIATED 81-05-03	17. DOSIMETER(S) DISCONTINUED
18. LAST DOSIMETER(S) RETURNED	19. LOCATOR CARD TO HEALTH RECORD 81-05-03	20. DD FORM(S) 1141 TO MEDICAL RECORDS

OCCUPATIONAL EXPOSURE HISTORY

NOTE: This section only applies to the individual who has worked with radiation-producing devices or radioisotopes in a permanent status. List only those employers for whom you worked with radiation.

NAME OF EMPLOYER	ADDRESS (street address, city, state, zip code)	FROM YR	FROM MO	TO YR	TO MO	Do not write in this space
Nuclear Services, Inc	Shickshinny, PA	78	08	80	04	
Rosewater University	Portland, OR	80	04	81	04	
	TOTAL EXPOSURE DATA					

REMARKS

SAMPLE

DD FORM 1 NOV 1952 — EDITION OF 1 SEP 74 IS OBSOLETE.

Ex 6 / PORTIONS

Appendix D

RECORD OF OCCUPATIONAL EXPOSURE TO IONIZING RADIATION

FOR INSTRUCTIONS, SEE REVERSE OF SHEET.

1. IDENTIFICATION NUMBER	2. NAME (Last, First, middle initial)	3. SOCIAL SECURITY NUMBER	4. RANK/RATE TITLE OF POSITION	5. DATE OF BIRTH (Day, Month, Year)
074	[redacted]	[redacted]	TDR	[redacted]

PLACE WHERE EXPOSURE OCCURRED WHOLE BODY	PERIOD OF EXPOSURE		DOSE THIS PERIOD (rem) 1. Method of monitoring is presumed to be film badge reading unless otherwise specified under Item 14, "REMARKS."				ACCUMULATED DOSE (rem)		INITIAL
ACTIVITY	FROM (Day-Mo-Yr)	TO (Day-Mo-Yr)	SKIN DOSE (Soft)	GAMMA AND X-RAY	NEUTRON	TOTAL THIS PERIOD	TOTAL LIFETIME	PERMISSIBLE LIFETIME 5(N-18)	PERSON MAKING ENTRY
6	7	8	9	10	11	12	13	14	15
Previous Exposure[1]	Aug66	Apr68	NR	00.107	NU	00.107	00.107	-	CED
Admin Dose[2]	Apr68	Apr69	-	-	-	05.000	05.107	45.000	CED
APG-EA, MD	3May69	4Jun69	NR	00.000	NU	00.000	05.107	45.000	CED
do	6Jun69	6Jun69	Quarterly Review by RPO				-	-	JER
do	5Jun69	4Jul69	00.003	00.010	NU	00.010	05.117	45.000	CED
do	5Jul69	7Aug69	NR	00.078	NU	00.078	05.195	45.000	CED
do	8Aug69	6Sep69	Film Badge Lost[3]		NU	00.416	05.611	45.000	CED
do	8Sep69	8Sep69	Quarterly Review by RPO				-	-	JER
do	7Sep69	4Oct69	NR	00.064	NU	00.064	05.675	45.000	CED
do	5Oct69	4Nov69	NR	00.075	NU	00.075	05.750	45.000	WLW
do	5Nov69	6Dec69	00.016	00.070	NU	00.070	05.820	45.000	WLW
do	Film Badge Service Discontinued 6 Dec 69						-	-	WLW
do	6Dec69	6Dec69	Quarterly Review by RPO				-	-	JER
Fort Plunkett	2Jan70	3Feb70	NR	00.000	00.000	00.000	05.820	45.000	RKO
do	4Feb70	3Mar70	NR	00.178	00.062	00.240	06.0[illegible]	45.000	RKO
do	4Mar70	2Apr70	00.052	02.504	00.126	02.630	08.690	45.000	RKO
do	22Mar70	22Mar70	Quarterly Review by RPO				-	-	MJM
do	3Apr70	4May70	Relieved From Duties				08.690	50.000	RKO
do	5May70	3Jun70	Involving Exposure to RAD[5]				08.690	50.000	RKO
do	4Jun70	2Jul70	00.017	00.100	00.043	00.143	08.833	50.000	[illegible]
Fort Smith, CA	Aug70	Jul7[illegible]	No Film Badge Worn or Exposure Received				08.833	55.000	GAL
			SAMPLE						

16. REMARKS (Continue on additional sheet if necessary)

1. Nuclear Services, Inc., Shickshinny, PA
2. Rosewater University, Portland, OR
   No film badge records (AR 40-14).
NR - none reported; NU - not used
Has wrist badge No. 086.
3. Admin Dose = $\frac{5 \text{ rem}}{12 \text{ months}}$ = 00.416 rem
4. Alleged overexposure.
5. Pending investigation IAW AR 40-5.

TO BE RETAINED PERMANENTLY IN INDIVIDUAL'S MEDICAL RECORD

DD FORM 1 MAY 67 1141 PREVIOUS EDITIONS ARE OBSOLETE.

Ex 6 / PORTIONS

RADIOACTIVE MATERIAL MOVEMENT

____ Shipment ____ Receipt

TCN/GBL;	Containers:
NSN:	Nomenclature:

Proper Shipping Name:

____ Radioactive material,empty packages,UN 2908
____ Radioactive material,articles,manufactured from natural OR depleted uranium OR natur thorium,UN 2909
____ Radioactive material,limited quantity,n.o.s.,UN 2910
____ Radioactive material,instruments and articles,UN 2911
____ Radioactive material,low specific activity OR LSA,n.o.s.,UN 2912
____ Radioactive material,fissile,n.o.s.,UN 2918
____ Radioactive material,special form,n.o.s.,UN 2974
____ Radioactive material,n.o.s.,UN 2982

Label: ____ White I ____ Yellow II ____ Yellow III ____ None	Marking: ____ Radioactive ____ Radioactive LSA ____ Waste Class A, B, or C ____ Other (____ None
Radiation Level: Surface _____mR/hr One Meter _____mR/hr	Transportation Index _____

Comments:

Name/Title:	Date:

The proponent of this publication is the U.S. Army Communications-Electronics Command. Users are invited to send comments on DA Form 2028 (Recommended Changes to Publications and Blank Forms) to Commander, CECOM, ATTN: AMSEL-SF-RIR, Fort Monmouth, New Jersey 07703-5000.

FOR THE COMMANDER:

OFFICIAL:

MICHAEL C. KOTCH
Colonel, GS
Chief of Staff

LINDSEY A. SMITH
CPT(P), IN
Adjutant

DISTRIBUTION:
To be distributed in accordance with SEL Form 1130 requirements for CECOM regulations, Safety, plus

AMSEL-SF-RIR 10
Record Set File, ATTN: SELHI-ADJ 6

Standard Operating Procedures for
Cobalt 60 Irradiator Facility

1. All individuals while in the exposure room, will wear film badges, and/or pocket dosimeters and have access to a survey meter when irradiating materials in the facility.

2. Permission and key access will be cleared through the supervisor of the radiation facility or his representative before experimenting is begun.

3. Exposures will be made as follows:

a. A bridge crane of 6 ton capacity is installed over the tank to handle all the necessary equipment to be lowered into the tank.

b. An aluminum diving bell will be used to expose material to the sources. It measures approximately 30" in diameter by 30" high. An air line attached to the bell keeps the water from entering the bell as it is slowly lowered over the exposure rack by the bridge crane.

c. Material to be exposed will be attached in the diving bell while the bell is suspended on the crane above and to one side of the tank.

d. After the material is in place, the diving bell will be swung over the tank, guide rollers will be attached to keep the bell in position, and it will be slowly lowered to position over the exposure rack and rest on the platform exposure table at the bottom of the tank. Compressed air will be fed into diving bell at the necessary pressure to keep water from entering the bell as it is lowered to the exposure position.

e. At completion of the exposure period, the diving bell will be raised from tank by the bridge crane and removed to a position in the room for removal of exposed material.

f. All safety rules and precautions will be adhered to during all periods of experimentation.

Emergency Procedures

1. If water in storage tank should suddenly start to disappear faster than normal refill can take care of, a firehose will be attached to the 2" fill pipe provided for that purpose, and from there to the fire hydrant less than 100' away. Water provided from the fire hydrant will keep the water at normal level until the problem is corrected.

2. If circulating pumps should stop, the pump attached to the emergency storage tank will be used and normal filtering obtained while the regular pump is repaired.

3. If emergency storage tank pump should fail while sources are stored for an emergency repair:

a. Water will be returned to the storage tank via a firehose connection to a depth necessary to operate regular filter pump.

b. Regular filter pump will be employed until the emergency storage tank pump is repaired.

Leak Testing

1. The pool irradiator will be leak tested at intervals specified under the U.S. Nuclear Regulatory Commission License for the irradiator, but not to exceed six months.

2. A 100 ml aliquot of water taken prior to filtration will be obtained from the pool. This sample will be evaporated, and the residue counted.

3. The counting system used will be calibrated using a NBS traceable Cobalt-60 check source, with a sensitivity of not less than 0.005 microcuries.

4. Results will be documented and maintained for 5 years.

Other Testing

1. All the DAI radiation monitors will be functionally tested monthly utilizing the self-contained check source (Sr-90). Monitors which fail the operational check will be repaired or replaced, as necessary.

2. Representative samples of the sand and deionizing filters will be collected at the time of filter(s) changeout and analyzed for radioactive material content. Those filters containing 30pCi/gm or above of Co-60 will be disposed of as radioactive waste.

Supplement G

1. Reference: Item 11, NRC Form 313.

2. Disposal of the radioactive materials indicated at Supplement B may be accomplished by return to the appropriate manufacturer, as applicable, and/or through established DA channels in accordance with Title 10 CFR, AR 385-11 and AR 700-64. Headquarters, U.S. Army Armament, Munitions and Chemical Command (AMCCOM), has been delegated the responsibility of management coordination for radioactive waste disposal. AMCCOM assures that all radioactive wastes are packaged and shipped in accordance with all applicable requirements for ultimate transfer of the radioactive waste to an authorized burial site.