# SAFETY EVALUATION REPORT

# TRANSNUCLEAR INC.,

# NUHOMS® HD HORIZONTAL MODULAR STORAGE

# SYSTEM FOR IRRADIATED NUCLEAR FUEL

# DOCKET NO. 72-1030

## TABLE OF CONTENTS


SUMMARY . . . . . 1-1

1.0 GENERAL DESCRIPTION . . . . . 1-1
1.1 General Description and Operations Features . . . . . 1-1
1.1.1 Dry Shielded Canister (32PTH DSC) . . . . . 1-2
1.1.2 Horizontal Storage Module (HSM-H) . . . . . 1-3
1.1.3 Transfer System . . . . . 1-4
1.2 Drawings . . . . . 1-5
1.3 32PTH DSC Contents . . . . . 1-5
1.4 Technical Qualifications of Applicant . . . . . 1-5
1.5 Evaluation Findings . . . . . 1-5

2.0 PRINCIPAL DESIGN CRITERIA . . . . . 2-1
2.1 Structures, Systems, and Components Important to Safety . . . . . 2-1
2.2 Design Basis for Structures, Systems, and Components Important to Safety . . . . 2-1
2.2.1 Spent Fuel Specifications . . . . . 2-1
2.2.2 External Conditions . . . . . 2-1
2.3 Design Criteria for Safety Protection Systems . . . . . 2-2
2.3.1 General . . . . . 2-2
2.3.2 Structural . . . . . 2-2
2.3.3 Thermal . . . . . 2-2
2.3.4 Shielding/Confinement/Radiation Protection . . . . . 2-2
2.3.5 Criticality . . . . . 2-3
2.3.6 Operating Procedures . . . . . 2-3
2.3.7 Acceptance Tests and Maintenance . . . . . 2-3
2.3.8 Decommissioning . . . . . 2-3
2.4 Evaluation Findings . . . . . 2-3

3.0 STRUCTURAL EVALUATION . . . . . 3-1
3.1 Structural Design of the NUHOMS® HD System . . . . . 3-1
3.1.1 Dry Shielded Canister 32PTH DSC . . . . . 3-1
3.1.2 HSM-H Reinforced Concrete Structure . . . . . 3-2
3.1.3 OS187H On-Site Transfer Cask . . . . . 3-2
3.2 Materials . . . . . 3-3
3.2.1 Structural Materials . . . . . 3-3
3.2.2 Nonstructural Material . . . . . 3-5
3.2.3 Welds . . . . . 3-6
3.2.4 Bolting Materials . . . . . 3-6
3.2.5 Coatings . . . . . 3-6
3.2.6 Material Properties . . . . . 3-6
3.2.7 Chemical and Galvanic Reactions . . . . . 3-7
3.3 Normal Conditions of Storage and Transfer . . . . . 3-7
3.3.1 Loads and Loading Conditions . . . . . 3-7
3.3.2 Analysis Methods . . . . . 3-9
3.3.3 Analysis Results . . . . . 3-10

3.4 Off-Normal and Accident Conditions . . . . . 3-11
3.4.1 The 32PTH DSC Off-Normal and Accident Conditions Structural Analysis . . . . . 3-11
3.4.2 HSM-H Off-Normal and Accident Conditions Structural Analysis . . . . . 3-12
3.4.3 Transfer Cask Off Normal and Accident Condition Structural Analysis . . . . . 3-12
3.5 Evaluation Findings . . . . . 3-13
3.6 References . . . . . 3-14

4.0 THERMAL EVALUATION . . . . . 4-1
4.1 Spent Fuel Cladding . . . . . 4-1
4.2 Cask System Thermal Design . . . . . 4-2
4.2.1 Design Criteria . . . . . 4-2
4.2.2 Design Features . . . . . 4-2
4.3 Thermal Load Specifications . . . . . 4-2
4.4 Model Specifications . . . . . 4-3
4.4.1 Thermal Properties of Materials . . . . . 4-3
4.4.2 Use of Effective Thermal Conductivity Models . . . . . 4-3
4.4.3 Boundary Conditions . . . . . 4-4
4.4.4 Model Configurations . . . . . 4-5
4.5 Evaluation of Cask Performance for Normal Conditions . . . . . 4-5
4.6 Evaluation of Cask Performance for Off-Normal Conditions . . . . . 4-5
4.7 Evaluation of Cask Performance for Accident Conditions . . . . . 4-6
4.8 Evaluation of Cask Performance for Loading/Unloading Conditions . . . . . 4-6
4.9 Analysis of the HSM Module . . . . . 4-6
4.10 Staff's Confirmatory Analysis of the NUHOMS® HD DSC . . . . . 4-7
4.11 Evaluation Findings . . . . . 4-7
4.12 References . . . . . 4-8

5.0 SHIELDING EVALUATION . . . . . 5-1
5.1 Shielding Design Features and Design Criteria . . . . . 5-1
5.1.1 Shielding Design Features . . . . . 5-1
5.1.2 Shielding Design Criteria . . . . . 5-2
5.2 Contents and Source Specification . . . . . 5-2
5.2.1 Contents . . . . . 5-2
5.2.2 Source Specification . . . . . 5-3
5.3 Shielding Model Specifications . . . . . 5-4
5.3.1 Shielding and Source Configuration . . . . . 5-4
5.3.2 Material Properties . . . . . 5-4
5.4 Shielding Analyses Results . . . . . 5-5
5.4.1 Computer Programs . . . . . 5-5
5.4.2 Flux-to-Dose-Rate Conversion . . . . . 5-5
5.4.3 Normal Conditions . . . . . 5-5
5.4.4 Off-Normal . . . . . 5-5
5.4.5 Accident Conditions . . . . . 5-6
5.4.6 Occupational Exposures . . . . . 5-6
5.4.7 Confirmatory Calculations . . . . . 5-6
5.5 Evaluation Findings . . . . . 5-6
5.6 References . . . . . 5-7

6.0 CRITICALITY EVALUATION . . . . . 6-1
6.1 Criticality Design Criteria and Features . . . . . 6-1
6.2 Fuel Specification . . . . . 6-2
6.3 Model Specification . . . . . 6-3
6.3.1 Configuration . . . . . 6-3
6.3.2 Material Properties . . . . . 6-5
6.4 Criticality Analysis . . . . . 6-5
6.4.1 Computer Programs . . . . . 6-5
6.4.2 Multiplication Factor . . . . . 6-5
6.4.3 Benchmark Comparisons . . . . . 6-6
6.5 Supplemental Information . . . . . 6-6
6.6 Evaluation Findings . . . . . 6-6
6.7 References . . . . . 6-7

7.0 CONFINEMENT EVALUATION . . . . . 7-1
7.1 Confinement Design Characteristics . . . . . 7-1
7.2 Confinement Monitoring Capability . . . . . 7-1
7.3 Nuclides with Potential Release . . . . . 7-2
7.4 Confinement Analysis . . . . . 7-2
7.5 Supportive Information . . . . . 7-2
7.6 Evaluation Findings . . . . . 7-3
7.7 References . . . . . 7-3

8.0 OPERATING PROCEDURES EVALUATION . . . . . 8-1
8.1 Cask Loading . . . . . 8-1
8.1.1 Fuel Specifications . . . . . 8-1
8.1.2 ALARA . . . . . 8-1
8.1.3 Draining, Drying, Filling and Pressurization . . . . . 8-1
8.1.4 Welding and Sealing . . . . . 8-2
8.2 Cask Handling and Storage Operations . . . . . 8-2
8.3 Cask Unloading . . . . . 8-2
8.4 Evaluation Findings . . . . . 8-2

9.0 ACCEPTANCE TEST AND MAINTENANCE PROGRAMS . . . . . 9-1
9.1 Acceptance Tests . . . . . 9-1
9.1.1 Visual and Nondestructive Examination Inspections . . . . . 9-1
9.1.2 Leakage Testing . . . . . 9-1
9.1.3 Neutron Absorber Tests . . . . . 9-1
9.2 Evaluation Findings . . . . . 9-2
9.3 References . . . . . 9-3

10.0 RADIATION PROTECTION EVALUATION . . . . . 10-1
10.1 Radiation Protection Design Criteria and Design Features . . . . . 10-1
10.1.1 Design Criteria . . . . . 10-1
10.1.2 Design Features . . . . . 10-1
10.2 Occupational Exposures . . . . . 10-2
10.3 Public Exposures From Normal and Off-Normal Conditions . . . . . 10-2

10.4 Public Exposures From Design-Basis Accidents and Natural Phenomena Events . . . . . 10-3
10.5 ALARA . . . . . 10-3
10.6 Evaluation Findings . . . . . 10-4
10.7 References . . . . . 10-4

11.0 ACCIDENT ANALYSIS . . . . . 11-1
11.1 Off-Normal Conditions . . . . . 11-1
11.2 Accident Events and Conditions . . . . . 11-1
11.2.1 Blockage of Air Inlet and Outlet Openings . . . . . 11-1
11.2.2 Accidental Drop of 32PTH DSC Inside the Transfer Cask . . . . . 11-2
11.2.3 Fire/Explosion . . . . . 11-2
11.2.4 Lightning . . . . . 11-3
11.2.5 Flood . . . . . 11-3
11.2.6 Seismic Events . . . . . 11-3
11.2.7 Tornado Wind and Tornado Missiles . . . . . 11-3
11.3 Evaluation of Findings . . . . . 11-4
11.4 References . . . . . 11-4

12.0 CONDITIONS FOR CASK USE - TECHNICAL SPECIFICATIONS . . . . . 12-1
12.1 Conditions for Use . . . . . 12-1
12.2 Technical Specifications . . . . . 12-1
12.3 Evaluation Findings . . . . . 12-1

13.0 QUALITY ASSURANCE . . . . . 13-1

14.0 DECOMMISSIONING . . . . . 14-1
14.1 Decommissioning Activities . . . . . 14-1
14.2 Evaluation Findings . . . . . 14-1

15.0 CONCLUSIONS . . . . . 15-1
15.1 Overall Conclusion . . . . . 15-1
15.2 Conclusion Regarding the Thermal Analysis of the HSM-H Module . . . . . 15-1
15.3 Conclusion Regarding Analytical Method for the Effective Thermal Conductivity Within the Neutron Shield of the OS187H Transfer Cask . . . . . 15-2

**TRANSNUCLEAR**
**NUHOMS® HD**
**HORIZONTAL MODULAR**
**STORAGE SYSTEM**
**FOR IRRADIATED NUCLEAR FUEL**

**DOCKET NO. 72-1030**
**MODEL NO. NUHOMS® HD**
**TRANSNUCLEAR, INC.**
**CERTIFICATE OF COMPLIANCE NO. 1030**

## SUMMARY

By letter dated May 5, 2004, Transnuclear, Inc. (TN) submitted an application to the U.S. Nuclear Regulatory Commission to obtain a Certificate of Compliance for the NUHOMS® HD System. The staff performed a detailed safety evaluation of the application, which is documented in this safety evaluation report (SER). The staff's evaluation and conclusions regarding the acceptability of the NUHOMS® HD System are based on information submitted by TN on May 5, 2004, as supplemented. The staff determined that the NUHOMS® HD System meets the requirements of 10 CFR Part 72.

## 1.0 GENERAL DESCRIPTION

The objective of the review of the general description of the NUHOMS® HD System is to ensure that TN has provided a non-proprietary description that is adequate to familiarize reviewers and other interested parties with the pertinent features of the system.

### 1.1 General Description and Operations Features

The NUHOMS® HD System is based on the Standardized NUHOMS® System described in Certificate of Compliance (CoC) No. 1004. The 32PTH dry shielded canister (DSC) included in this system is similar to the 24PTH DSC approved for use under Amendment No. 8 to the Standardized NUHOMS® System.

The 32PTH DSC will be transferred during loading operations using the OS-187H transfer cask (TC). The OS-187H TC is very similar to the OS-197 and OS-197H TCs described in the safety analysis report (SAR) for the Standardized NUHOMS® Storage System. The OS-187H TC has a slightly larger diameter than the OS-197 TC. Another difference between the OS-187H and the OS-197 TC is that the OS-187H has closure containing seals so that a helium environment can be maintained in the TC annulus during DSC transfer operations. The 32PTH DSC will be stored in a horizontal storage module (HSM-H). The HSM-H is virtually identical to the HSM-H approved for use under Amendment 8 to the Standardized NUHOMS® System.

### 1.1.1 Dry Shielded Canister (32PTH DSC)

The 32PTH DSC is designed to store up to 32 intact pressurized water reactor (PWR) Westinghouse 15x15 (WE 15x15 and WES 15x15), Westinghouse 17x17 (WE 17x17, WEV 17x17 and WEO 17x17), Framatome ANP Advanced MK BW 17x17 (MK BW 17x17) and/or Combustion Engineering 14x14 (CE14x14) fuel assemblies. Non-Fuel Assembly Hardware (NFAHs) like Vibration Suppressor Inserts (VSI), Burnable Poison Rod Assemblies (BPRAs), or Thimble Plug Assemblies (TPAs) are allowed for these fuel assemblies except for CE 14x14 fuel assemblies. The 32PTH DSC is also designed for storage of up to 16 damaged fuel assemblies, and remaining intact assemblies, utilizing top and bottom end caps. The maximum heat load per 32PTH DSC, including any integral insert components, is 34.8 kW for WE 15x15, WES 15x15, WE 17x17, WEV 17x17, WEO 17x17, and MK BW 17x17 assemblies and 33.8 kW for CE 14x14 assemblies.

The 32PTH DSC consists of a stainless steel cylindrical shell with welded inner top cover/shield plug (including siphon/vent cover welds) and inner bottom cover plate which form the confinement boundary. Shield plugs are installed inside of the confinement boundary, at the top and bottom, to provide radiological shielding. Inside the 32PTH DSC is a basket assembly that consists of stainless steel square tubes and support strips for structural support, and geometry control; and aluminum/borated aluminum for heat transfer and criticality control. The 32PTH DSC is very similar to the 24PTH DSC.

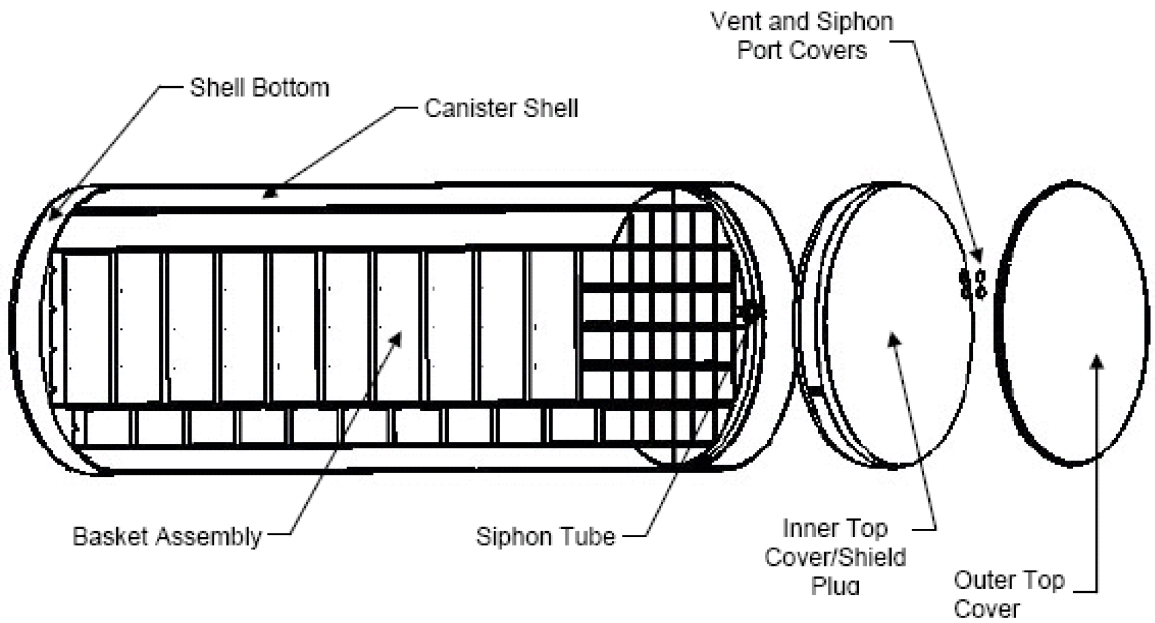

### 1.1.2 Horizontal Storage Module (HSM-H)

The HSM-H is constructed of reinforced concrete and structural steel. The key design parameters of the HSM-H are provided in Table 1-1 of the SAR. The HSM-H design is virtually identical to the HSM-H for the NUHOMS® 24PTH DSC included in Amendment 8 to CoC 1004. The HSM-H provides spent fuel decay heat removal, physical and radiological protection for the 32PTH DSC. Ambient air enters the HSM-H through ventilation inlet openings located on both sides of the lower front of the HSM-H and circulates around the 32PTH DSC and the heat shields. Air exits through air outlet openings located on each side of the top of the HSM-H.

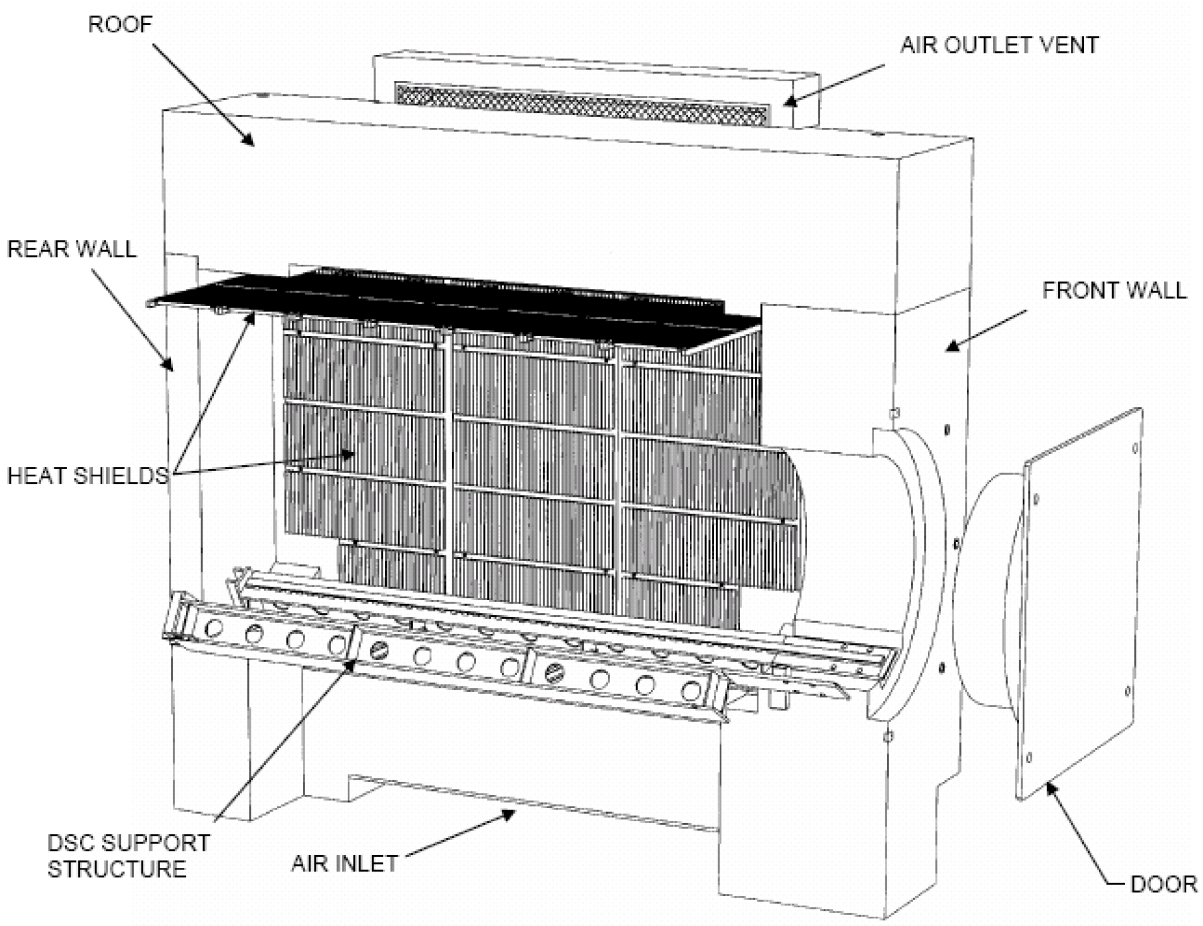

### 1.1.3 Transfer System

The OS-187H TC, used with the NUHOMS® HD System, provides shielding and protection from potential hazards during 32PTH DSC loading and closure operations and transfer to the HSM-H. The OS-187H TC is very similar to the OS-197 and OS-197H TC described in the SAR for the Standardized NUHOMS® Storage System. The TC is constructed from two concentric stainless steel shells with a bolted and gasketed top cover plate and a welded bottom end assembly. The TC also includes an outer steel jacket which is filled with water to provide neutron shielding. The top and bottom end assemblies also incorporate a solid neutron shield material. Two top lifting trunnions are provided for handling the TC using a lifting yoke and overhead crane. Lower trunnions are provided for rotating the cask from/to the vertical and horizontal positions on the support skid/transport trailer. A gasketed cover plate is provided to seal the bottom hydraulic ram access penetration of the cask during loading. The TC lid is also provided with gaskets so that a helium environment can be maintained during DSC transfer operations.

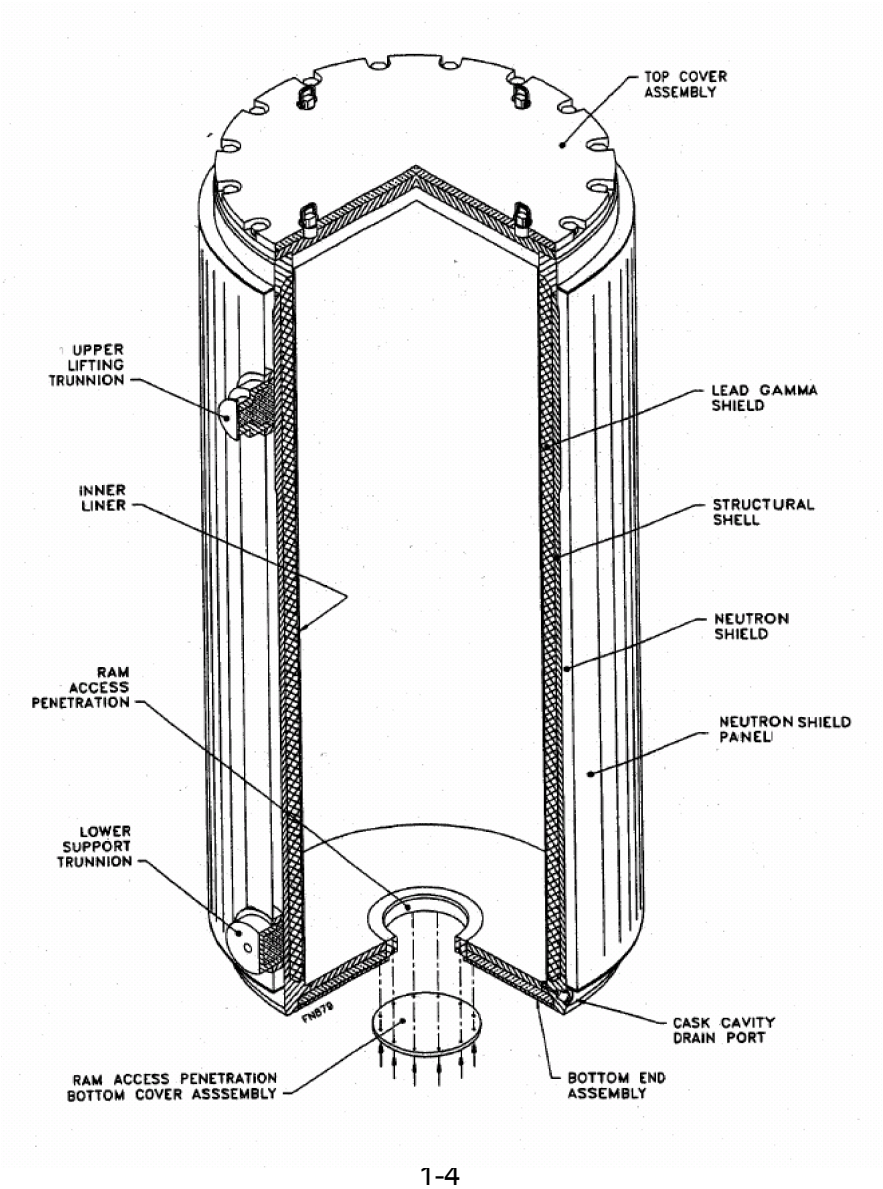

The transfer trailer is not important to safety because the NUHOMS® HD System Technical Specifications (TS) limit the lifting height of the 32PTH DSC to eighty inches which is within the design basis drop for the DSC. Therefore, the transfer trailer was not evaluated in this SER.

### 1.2 Drawings

Section 1 of the SAR contains the non-proprietary drawings for the NUHOMS® HD System, including drawings of the structures, systems, and components (SSC) important to safety. The staff determined that the drawings contain sufficient detail on dimensions, materials, and specifications to allow for a thorough evaluation of the NUHOMS® HD System. Specific SSC are evaluated in Sections 3 through 12 of this SER.

### 1.3 32PTH DSC Contents

The 32PTH DSC is designed to store up to 32 intact CE 14x14, WE 15xl5, WE 17x17, and/or FR 17x17 assemblies. Non-Fuel Assembly Hardware like VSIs, BPRAs, or TPAs are allowed for these fuel assemblies except for CE 14x14 fuel assemblies. The 32PTH DSC is also designed for storage of up to 16 damaged fuel assemblies, and remaining intact assemblies. Additional fuel characteristics are discussed in Sections 2 and 6 of the SAR.

### 1.4 Technical Qualifications of Applicant

Section 1.3 of the SAR contains identification of agents and contractors. The prime contractor for design and procurement of the NUHOMS® HD System components is TN. TN will subcontract the fabrication, testing, on-site construction, and QA services as necessary to qualified firms on a project specific basis in accordance with the TN QA program requirements. The TN QA program is evaluated in Section 13 of this SER.

### 1.5 Evaluation Findings

F1.1 A general description of the NUHOMS® HD System is presented in Section 1 of the SAR with special attention to design and operating characteristics, unusual or novel design features and principal safety considerations.

F1.2 Drawings for SSC important to safety are presented in Section 1 of the SAR. Specific SSC are evaluated in Sections 3 through 12 of this SER.

F1.3 Specifications for the spent fuel to be stored in the NUHOMS® HD System are stated in SAR Sections 1, 2, and 6.

F1.4 The technical qualifications of the applicant to engage in the proposed activities are identified in Section 1.3 of the SAR.

F1.5 The quality assurance program, and implementing procedures are described in Section 13 of the SAR.

F1.6 The staff concludes that the information presented in this Section of the SAR satisfied the requirements for the general description under 10 CFR Part 72. This finding is reached on the basis of a review that considered the regulation itself, Regulatory Guide 3.61, and accepted practices.

## 2.0 PRINCIPAL DESIGN CRITERIA

The objective of reviewing the principal design criteria related to the structures, systems, and components (SSC) important to safety is to ensure that they comply with the relevant general criteria established in 10 CFR Part 72.

### 2.1 Structures, Systems, and Components Important to Safety

The SSCs important to safety are discussed in Section 2.5 of the SAR and summarized in Table 2-5 of the SAR. In this table, each component is assigned a safety classification. The SSCs important to safety include the 32PTH DSC, the HSM-H, and the OS-187H TC. The staff agrees with the determinations stated in Section 2.5 of the SAR.

### 2.2 Design Basis for Structures, Systems, and Components Important to Safety

#### 2.2.1 Spent Fuel Specifications

The NUHOMS® HD System can store 32 intact or up to 16 damaged with remaining intact, WE 15x15, WE 17x17, FR 17x17 and/or CE 14x14 PWR fuel assemblies. The 32 PWR fuel assemblies can be stored with or without non-fuel assembly hardware which includes burnable poison rod assemblies, vibration suppression inserts or thimble plug assemblies. As stated in TS 2.1.b equivalent reload fuel assemblies that are enveloped by the fuel assembly design characteristics listed in TS Table 2 for a given assembly class are also acceptable for storage.

The applicant defined damaged fuel and how damaged fuel will be placed into the basket assembly in SAR Section 2.1.1. The applicant also provides the definition of damaged fuel in the TSs in accordance with guidance contained in Interim Staff Guidance Memorandum-1, Rev.1 (ISG-1, Rev. 1) entitled, “Damaged Fuel.” The staff reviewed the SAR Section 2.1.1 and the TS and concludes that the intent of ISG-1, Rev. 1 has been satisfied.

The fuel to be stored in the 32PTH DSC is limited to fuel with a maximum initial enrichment of 5.00 weight percent U-235. The maximum allowable burnup is given as a function of initial fuel enrichment but does not exceed 60 GWd/MTU. The minimum cooling time for fuel assemblies is five years.

#### 2.2.2 External Conditions

The NUHOMS® HD System SAR Section 2.2 includes a summary of environmental conditions, natural phenomena, and manmade situations that the system has been designed to withstand. These include:

- tornado and wind loadings
- flooding
- seismic events
- snow and ice loadings
- lighting
- fire
- cask drop

The staff has determined that the descriptions contain sufficient detail to provide an overview of which conditions, phenomena, and situations required consideration for their evaluation. Further evaluation of these and other normal, off-normal, and accident conditions are discussed in Sections 3 through 11 of this SER.

## 2.3 Design Criteria for Safety Protection Systems

The safety protection systems, a summary of design criteria for the NUHOMS® HD System, are described in Section 2.3 of the SAR.

### 2.3.1 General

The NUHOMS® HD System was designed to provide long term storage of spent fuel. The 32PTH DSC cylindrical shell, the inner top cover/shield plug (including the vent and siphon covers and welds), and the bottom form the pressure retaining confinement boundary for the spent fuel. The outer top closure plate is welded to the shell to provide a redundant confinement boundary. The 32PTH DSC shell and bottom end assembly confinement boundary weld is made during fabrication of the 32 PTH DSC. The top closure confinement and structural welds are made after fuel loading.

### 2.3.2 Structural

The structural analysis for the 32PTH DSC, HSM-H, and OS187H TC is presented in Section 3 of the SAR. Section 3 of the SAR also describes the ability of these components to perform their design functions during normal and off-normal operating conditions, as well as under postulated accident conditions and extreme natural phenomena. The load combinations considered for combining normal operating, off-normal, and accident loads for the 32PTH DSC, HSM-H, and OS187H TC are discussed in Section 2.2.7 of the SAR.

### 2.3.3 Thermal

The thermal analysis is presented in Section 4 of the SAR. The NUHOMS® HD System is designed to passively remove decay heat. Fuel cladding integrity is assured by the DSC design which limits fuel cladding temperature and maintains a nonoxidizing environment inside the canister.

### 2.3.4 Shielding/Confinement/Radiation Protection

The shielding analysis, confinement analysis and radiological protection capabilities of the NUHOMS® HD System are discussed in Sections 5, 7, and 10, respectively. The DSC's confinement is obtained with redundant welded closures and is verified through non-destructive examinations at the completion of welding. Radiation exposure is minimized through the shielding capabilities of the OS-187H transfer cask and the HSM-H .

### 2.3.5 Criticality

The criticality analysis is presented in Section 6 of the SAR. The design criteria for criticality safety is that the effective neutron multiplication factor upper sub-critical limit of 0.95 minus statistical uncertainties and bias, is limiting for all postulated arrangements of fuel within the canister. The control method used to prevent criticality is incorporation of poison material in the DSC and credit for soluble boron in the spent fuel pool.

### 2.3.6 Operating Procedures

Generic operating procedures are described in Section 8 of the SAR. This section outlines the loading, unloading, and recovery operations and provides the basis and general guidance for more detailed, site-specific procedures.

### 2.3.7 Acceptance Tests and Maintenance

The acceptance test and maintenance program for the NUHOMS® HD System are described in Section 9 of the SAR, including the commitments, industry standards, and regulatory requirements used to establish the acceptance, maintenance, and periodic surveillance tests.

### 2.3.8 Decommissioning

Decommissioning considerations for the NUHOMS® HD System are described in Section 14 of the SAR.

## 2.4 Evaluation Findings

The staff concludes that the principal design criteria for the NUHOMS® HD System are acceptable with regard to meeting the regulatory requirements of 10 CFR Part 72. This finding is reached on the basis of a review that considered the regulation itself, appropriate regulatory guides, applicable codes and standards, and accepted engineering practices. A more detailed evaluation of design criteria and an assessment of compliance with those criteria is presented in Sections 3 through 14 of the SER.

## 3.0 STRUCTURAL EVALUATION

This section presents the results of the review for the structural evaluation of the NUHOMS® HD System. The NUHOMS® HD System consists of the 32PTH DSC basket and shell assemblies, the HSM-H horizontal storage module, and the OS187H Transfer Cask. The 32PTH DSC is a new dual purpose canister designed to accommodate up to 32 intact PWR fuel assemblies (or up to 16 damaged assemblies, with the remaining intact) and a total heat load of up to 34.8 kW. The HSM-H is an enhanced version of the NUHOMS® Standardized HSM (CoC 1004) to enable storage of the higher heat load 32PTH DSC. The OS187H is a modified version of the OS197 Transfer Cask with a redesigned shielding panel to improve thermal performance, a shortened cavity length, and increased inside diameter to accommodate the 32PTH DSC.

The 32PTH DSC is a cylindrical stainless steel canister backfilled with helium to provide dry storage of the spent fuel assemblies in an inert atmosphere; the HSM-H is a reinforced concrete horizontal storage module that houses and provides environmental protection and shielding to the 32PTH DSC; the OS187H transfer cask is a stainless steel cask with lead shielding that handles and protects the 32PTH DSC during transfer to and from the HSM-H.

A complete structural evaluation of the 32PTH DSC shell assembly and basket components, the HSM-H, and the OS187H transfer cask has been performed. The structural evaluation shows that the NUHOMS® HD system design is compatible with the requirements of 10 CFR 72.236 (Reference 1) for maintaining the spent fuel in a subcritical condition, providing adequate radiation shielding and confinement, having adequate heat removal capability, providing a redundant sealing of the confinement system, and providing wet or dry transfer capability. The structural review was conducted against the appropriate regulations as described in 10 CFR 72.11, 10 CFR 72.122, 10 CFR 72.146, and 10 CFR 72.236.

### 3.1 Structural Design of the NUHOMS® HD System

#### 3.1.1 Dry Shielded Canister 32PTH DSC

For the purpose of the structural analysis, the 32PTH DSC is divided into the 32PTH DSC shell assembly and the internal basket assembly. The canister shell assembly and details are shown on drawings 10494-72-1 through 10494-72-7 in SAR Chapter 1, Section 1.5. The shell assembly provides confinement of radioactive materials, encapsulates the fuel in an inert atmosphere (i.e., the canister is backfilled with helium before being sealed by welds), and the top shield plug and the shell bottom provide biological shielding during fuel loading operations and dry storage. The 32PTH DSC shell assembly is designed, fabricated, examined and tested in accordance with the requirements of Section III, Division 1, Subsection NB of the ASME Code (Reference 2). The 32PTH DSC top closure is composed of an outer top cover plate and an inner top cover/shield plug. The outer top cover plate and inner top cover/shield plug are sealed by separate welds. The inner top cover/shield plug is welded to the 32PTH DSC shell to form the inner pressure boundary. The outer top cover plate is welded to the shell to provide redundant sealing of the confinement boundary as required by 10 CFR 72.236(e). The inner top cover/shield plug, the siphon/vent block, and the siphon/vent port cover plate are designed, fabricated and inspected in accordance with the ASME Code Subsections NB to the maximum practical extent. Alternatives to the ASME code are discussed in Section 3.10 of the SAR and are listed in TS 4.4.4, “Alternatives to Codes and Standards.”

During fabrication, leak tests of the welds in the 32PTH DSC shell and bottom are performed in accordance with ANSI N14.5-1997 to demonstrate that the canister shell assembly is leaktight to $1x10^{-7}$ ref· $cm^3$/sec. Post-fabrication and after the fuel loading, the top confinement boundary welds (including the shell-to-inner top cover/shield plug weld and the vent and siphon cover plate welds), are leak tested to demonstrate leaktightness. This leaktight testing is also discussed in Section 9.1.2 of this SER.

The details of the 32PTH DSC basket are shown in drawings 10494-72-8 through 10494-72-12 in Chapter 1, Section 1.5. The basket is an assembly of stainless steel fuel tubes that is designed to accommodate 32 PWR fuel assemblies. The tubes are intermittently fusion welded to Type 304 stainless steel support plates. Neutron poison plates, either a boron-aluminum alloy or a boron carbide aluminum metal matrix composite, are sandwiched between the walls of the fuel tubes and the 304 stainless steel support plates. The neutron poison plates provide criticality control and a heat conduction path from the fuel assemblies to the canister shell. Stainless steel rails are oriented parallel to the axis of the canister and attached to the periphery of the basket to support the basket and maintain its orientation. The basket structure is open at each end and the fuel tubes are nominally 8.70 inches x 8.70 inches in cross section to provide clearances around the fuel assemblies. The overall length of the basket is 162.00 inches which is less than the canister cavity length of 164.50 inches to allow thermal expansions. The basket structure must provide sufficient rigidity to meet heat transfer, nuclear criticality, and structural requirements. The basket design is based on the allowable stresses of Section III, Subsection NG of the ASME Code. Stress limits for Level A through D service conditions are summarized in Table 3-3 of the SAR.

### 3.1.2 HSM-H Reinforced Concrete Structure

The HSM-H concrete and steel components are designed to the requirements of ACI 349 and the AISC Manual of Steel Construction, respectively. The loads and load combinations are in accordance with those specified in ANSI 57.9. The details of the HSM-H module are shown in drawings 10494-72-100 through 10494-72-109 in Chapter 1, Section 1.5. The HSM-H consists of two separate units: a base storage unit, where the 32PTH DSC is stored, and a top shield block that provides environmental protection and radiation shielding. The top shield block is attached to the base unit by vertical reinforcing bars. Three-foot thick shield walls are installed behind each HSM-H (single row array) and at the ends of each row to provide additional shielding.

### 3.1.3 OS187H On-Site Transfer Cask

The NUHOMS® -OS187H on-site transfer cask consists of a stainless steel structural shell, gamma shielding material (cast chemical lead), and solid (resin) and liquid (water) neutron shields. The top cover is bolted to the top flange by 24 -1.5 in. diameter high strength bolts and sealed with an O-ring. A cover plate is provided to seal the bottom hydraulic ram access penetration of the cask (by 12-1/2 in. high strength bolts with O-ring) during fuel loading and transferring the DSC to the ISFSI. Detailed design drawings for the OS187H Transfer Cask are provided in drawings 10494-72-15 through 10494-72-21 in SAR Chapter 1, Section 1.5. Sets of upper and lower trunnions, welded to the structural shell of the transfer cask, provide support, lifting, and rotation capabilities for transfer cask operations. The top trunnions are constructed from SA-182 Type FXM-19 and the bottom trunnions are constructed from SA-182 Type 304.

The top trunnions are designed, fabricated, and tested in accordance with ANSI N14.6 as critical lifting devices. Consequently they are designed with a factor of safety of six against the material yield strength and a factor of safety of ten against the material ultimate strength. The OS187H TC is designed to meet the criteria of ASME Code Subsection NC for Class 2 Components. Service Level A allowable stress limits are used for all normal and off-normal loadings. Service Level D allowable stress limits are used for load combinations that include postulated accident condition loadings.

## 3.2 Materials

The applicant provided a general description of the materials of construction in SAR Sections 1.1,1.2, and 3.1.1.1. Additional information regarding the materials, fabrication details and testing programs can be found in SAR Section 9.1. The staff reviewed the information contained in these Sections; Section 3.10, ASME Code Alternatives and the information presented in the license drawings, to determine whether the NUHOMS HD system meets the requirements of 10 CFR 72.24(c)(3) and (4), 72.122(a), (b), (h) and (I), and 72.236(g) and (h). In particular, the following aspects were reviewed: materials selection; brittle fracture; applicable codes and standards; weld design and specifications; chemical and galvanic corrosion, and cladding integrity.

### 3.2.1 Structural Materials

The structural components of the 32PTH-DSC (e.g., shell, bottom plate, and top cover plate) are fabricated from austenitic stainless steel (i.e., type 304). The fuel compartment boxes in the 32PTH-DSC basket are also fabricated from austenitic stainless steel. The sections of the stainless steel fuel compartments are fusion welded to type 304 stainless steel structural plates. This type of steel was selected because of its strength, ductility, resistance to corrosion and metallurgical stability. Because there is no ductile-to-brittle transition temperature for this steel, no brittle fracture issues exist. The staff concludes that the selection of 304 stainless steel is acceptable for use in the DSC.

The HSM-H is a free standing reinforced concrete structure designed to provide environmental protection and radiological shielding for the 32PTH DSC. The design of the HSM-H for 32PTH DSC is the same as the HSM-H for Amendment 8 to CoC 1004 for 24PTH DSC that has been approved by staff. The main structural components of the HSM-H are fabricated with reinforced concrete and carbon steel. The HSM-H components are fabricated from American Society for Testing and Materials (ASTM) A 36 steel, a commonly used steel for structural applications, ASTM A 615 reinforcing steel, and ASTM A-992 steel.

<u>Coastal Marine Environments</u>

It is widely recognized that corrosion is a significant concern in coastal marine environments due to the wind borne salts deposited upon structures. Based on questions from the staff regarding this issue, TN committed in a September 19, 2006, letter to add the following to Section 3.4.1.4 of the Safety Analysis Report for the Advanced NUHOMS design: “If an independent spent fuel storage installation site is located in a coastal salt water marine atmosphere, then any load-bearing carbon steel DSC support structure rail components of any associated HSM-H shall be procured with a minimum 0.20 percent copper content for corrosion resistance.” This

commitment has also been captured in NUHOMS® HD TS 4.4.1 for the HSM. Consequently, the TN design incorporates a requirement to use atmospheric corrosion resisting steels (a.k.a., weathering steels) when the spent fuel storage site is near a coastal marine environment.

A significant body of technical literature exists which provides corrosion rate data for a variety of steel alloys exposed to the elements at coastal sites. From this data, TN recognized that weathering steels provide ample corrosion resistance in a coastal marine atmosphere. This corrosion resistance would assure that the accumulated corrosion loss over a 20-year license period would be immaterial to the structural integrity of the support steel inside the horizontal storage module (HSM).

It should be noted that the data used to determine the required corrosion allowance are for samples fully exposed to the elements. It is known that samples which are fully shielded from the sun and rain show a significantly lower corrosion rate than that for the fully exposed samples. The structural steel of the HSM is entirely enclosed inside a ventilated concrete structure that totally shields the steel from sunlight and precipitation. TN chose to employ the higher corrosion rate data for fully exposed samples as the basis for their corrosion allowance. This provides an added degree of conservatism to their design.

In addition to the use of corrosion resisting steels, TN has specified the application of a protective coating over the support steel (Section 3.2.5 of this report discusses coatings). The coating may be one of several systems. One system consists of an inorganic zinc primer with an epoxy overcoat. This is an industry recognized, high performance, long-lived, industrial coating system that is designed to withstand very severe environments. Although the coating is specified, it is not credited in the corrosion rate calculations that are part of the structural steel design margins.

The staff finds that the use of corrosion resisting steel with a calculated corrosion rate derived from a more severe exposure environment is appropriate. Additionally, the staff finds that the use of a coating system, and the fact that the steel is enclosed in a dry, interior-like environment, provides addition protection against corrosion. Thus, the staff finds that this TN design provides reasonable assurance that the system will not experience any significant corrosion during the 20-year license period at a coastal spent fuel storage site.

Non-coastal Environments

For environments other than coastal marine environments, the staff believes specifying a corrosion resisting steel for any load-bearing carbon steel DSC support structure rail components of any associated HSM-H is unnecessary because: 1) the steel specified for construction has a calculated corrosion rate for this environment that is conservative and takes into account the expected corrosion over the 20 year licensing basis for the design and 2) the staff finds that the use of a coating system, and the fact that the steel is enclosed in a dry, interior-like environment, provides additional protection against corrosion and 3) if there is a unique corrosion hazard that is present at a particular site a general licensee would have to evaluate that hazard in accordance with the 10 CFR 72.212 process.

HSM-H conclusion

Regarding the HSM-H concrete, the minimum specified concrete compressive strength and density is 5000 psi and 145 lb/ft$^3$, respectively. The staff concludes that the concrete materials meet the requirements of ACI 349, and, the materials comprising the HSM-H are suitable for structural support, shielding, and protection of the 32PTH-DSC from environmental conditions.

Transfer Cask

Transfer cask structural components (including the inner and outer shells, trunnions, top and bottom covers, etc.) are primarily fabricated from ASME SA 240, chromium and chromium-nickel stainless steel plate, sheet, and strip for pressure vessels and for general applications. This type of steel is a common structural material. The staff concludes that this steel is suitable for use in the transfer cask.

### 3.2.2 Nonstructural Material

Criticality control in the PWR DSC basket is achieved by including neutron absorbers (also called poisons). The neutron absorber plates provide criticality control and a heat conduction path from the fuel assemblies to the canister shell. The DSC basket is a welded assembly of stainless steel fuel compartment boxes, and designed to accommodate PWR fuel assemblies. The sections of the stainless steel fuel compartments are fusion welded to Type 304 stainless steel structural plates, sandwiched between the box sections. Neutron poison plates are composed of 1) a borated aluminum alloy, 2) a boron carbide aluminum metal matrix composite, or 3) Boral® . The absorbers are sandwiched between the sections of the stainless steel walls of the adjacent box and the adjacent stainless steel plates. In accordance with Section 9.1 of the SAR and TS 4.3.1, appropriate acceptance testing will be used to ensure that the neutron absorbers have the minimum specified $^{10}$B loading (content) and perform their function. Section 9.1.3 of this SER discusses the neutron absorber testing in greater detail.

Neutron absorbers and gamma shields (ASTM B29) will be fabricated from materials that can perform well under all conditions of service during the license period. The lead and steel shells of the transfer cask provide shielding between the DSC and the exterior surface of the package for the attenuation of gamma radiation. Axial neutron shielding is primarily provided by a borated polyester resin compound. The resin compound is cast into stainless steel cavities on the outside surface of the top closure and bottom assembly. The resin material is an unsaturated polyester cross-linked with styrene, with about 50% weight mineral and fiberglass reinforcement. The components are polyester resin, styrene monomer, alpha methyl styrene, aluminum oxide, zinc borate, and chopped fiberglass.

The transfer cask lid and port cover o-rings may be fluorocarbon, silicone, EPDM, or other material with a service temperature range from -15 °F to 300 °F.

The staff concludes that the neutron absorbers, shielding materials, and O-rings will be adequately durable during the service life of the cask. As stated above, the acceptance and qualification for the neutron absorbers are discussed in Section 9.1.3 of this SER.

### 3.2.3 Welds

The 32PTH DSC shell assembly is designed, fabricated, examined and tested in accordance with the requirements of Subsection NB of the ASME Code. The circumferential and longitudinal shell plate weld seams are multi-layer full penetration butt welds. The butt weld joints are fully radiographed and inspected according to the requirements of NB-5000 of the ASME Boiler and Pressure Vessel Code. The full penetration inner bottom cover plate to shell weld is inspected to the same Code standards.

The DSC materials of construction (e.g., stainless steel) are readily weldable using common available welding techniques. The use of an experienced fabricator will ensure that the process chosen for fabrication will yield a durable canister. The DSC welds were well-characterized on the license drawings, and standard welding symbols and notations in accordance with American Welding Society (AWS) Standard A2.4, “Standard Symbols for Welding, Brazing, and Nondestructive Examination” were used.

The staff concludes that the welded joints of the DSC, HSM-H, and transfer cask meets the requirements of the ASME Code, AWS Code, and the guidance contained in Interim Staff Guidance-15 (ISG-15), Materials Evaluation.

### 3.2.4 Bolting Materials

The DSC is an all-welded canister.

The applicant submitted a brittle fracture analysis for the transfer cask carbon steel bolts. Procurement of the bolts in accordance with the ASME SA-540 Gr. B24 Cl. 1 specification will ensure that the material receives the proper heat treatment and possesses the required mechanical properties to prevent brittle fracture. The staff reviewed the analysis performed by the applicant and found it acceptable for this application.

### 3.2.5 Coatings

Corrosion-resistant coatings are optional on transfer cask alloy steel bolts.

Carbon steel embedments in the HSM-H concrete are coated to protect them from corrosion or they may be stainless steel. Other carbon steel components such as bolts, nuts, tie plates, etc., are also coated for environmental protection.

### 3.2.6 Material Properties

SAR Tables 3.5 through 3.15 provide materials specification (i.e., ASTM and ASME), mechanical and physical property data for the major structural materials including stainless steels, carbon steel, bolting materials, concrete, and shielding material. In addition, the applicant provided additional material properties in response to a request for additional information on irradiated data used to evaluate high burnup fuel structural integrity. Most of the values in these tables were obtained from ASME Code, Section II, Part D. However, some of the values were obtained from other acceptable references. The staff independently verified the temperature dependent values for the stress allowables, modulus of elasticity, Poisson’s ratio,

weight density, and coefficient of thermal expansion. Additionally, the staff verified the material strength properties used in the fuel rod integrity evaluation using various technical references. The staff concludes that the material properties are acceptable and appropriate for the expected load conditions (e.g., hot or cold temperature, wet or dry conditions) during the license period.

### 3.2.7 Chemical and Galvanic Reactions

In Section 3.4 of the SAR, the applicant evaluated whether chemical, galvanic or other reactions among the materials and environment would occur. In particular, the applicant evaluated whether chemical, galvanic or other reactions would occur when the DCS and its components (i.e., aluminum and steel) are exposed to pool water during short-term loading operations. Galvanic, pitting, crevice, intergranular, and stress corrosion cracking corrosion mechanisms were all evaluated and found to be negligible for this application. The staff reviewed the design drawings and applicable sections of the SAR to evaluate the effects, if any, of intimate contact between various materials in the DSC system materials of construction during all phases of operation. In particular, the staff evaluated whether these contacts could initiate a significant chemical or galvanic reaction that could result in components corrosion or combustible gas generation when in pool water. The staff concludes that any corrosion that occurs on or within the DSC will be minimal due to alloy selection and compatibility.

To ensure that the safety hazards associated with the ignition of hydrogen gas are mitigated, the procedures of SAR Section 8.1 are employed to monitor the concentration of hydrogen gas during any welding or cutting operations. The staff concludes that these procedures are adequate to prevent ignition of any hydrogen gas that may be generated during welding operation. Further, the potential reaction of the aluminum with the spent fuel pool water will not impact the ability of the aluminum grid plates and the neutron absorbers to perform their intended function because the loss of aluminum metal is negligible.

## 3.3 Normal Conditions of Storage and Transfer

During normal conditions of storage and transfer, the 32PTH DSC is subjected to both storage and transfer loading conditions, while the HSM-H is only subjected to storage loading conditions and the OS187H Transfer Cask is subjected to transfer loading conditions.

### 3.3.1 Loads and Loading Conditions

#### 3.3.1.1 NUHOMS® 32PTH DSC

The normal condition storage and transfer loads for the 32PTH DSC considered in the structural evaluation are:

- Dead Weight - The DSC maybe in either vertical or horizontal orientation.
- Thermal Loads - 115° F hot, -20° F cold ambient temperatures, and the DSC temperatures during the vacuum drying condition.
- Pressure Loads - Either 30 psig internal pressure or 15 psig external pressure.

- Handling Loads - 2g Axial, 2g Transverse, and 2g vertical are assumed.

- Hydraulic Loads - A 80 kips push or 60 kips pull hydraulic loads are assumed during DSC transfer operation.

The 32PTH DSC normal condition storage and transfer loads and load combinations are described and shown in SAR Appendix 3.9.1, Tables 3.9.1-9 and 3.9.1-10.

#### 3.3.1.2 HSM-H Horizontal Module

HSM-H normal loads are as follows:

- Dead Loads - Dead load includes the weight of the HSM-H concrete structure and the steel structure ( the DSC weight is considered as a live load). The dead load is varied by +5% from the estimated value to simulate the most adverse loading condition.

- Live Loads - Live loads include the roof design basis snow and ice loads of 110 psf. A total live load of 200 psf has been assumed in design. The DSC weight is treated as live loads for the concrete and steel components supporting the DSC.

- Thermal Loads - The normal thermal loads on HSM-H include the effects of design basis internal heat loads of the DSC (the design basis thermal loads for the HSM-H are based on a bounding value of 40.8 kW) and the effects of normal ambient conditions (e.g., $0^o$ F, cold and $100^o$ F, hot).

- Handling Loads - The most significant normal operation loading condition for the HSM-H is the sliding of the DSC between the TC and the HSM-H. It is assumed that an axial load of 80 kips is required for insertion and 60 kips for extraction. The loads are resisted by friction forces developed between the sliding surfaces of the DSC, the TC and the HSM-H supporting rails.

- Wind Loads - This load is conservatively assumed to be enveloped by the tornado generated wind loads. The maximum tornado general wind loads are 234 $lb/ft^2$ and 148 $lb/ft^2$ on the windward and leeward HSM-H walls, respectively.

The HSM-H concrete and steel structure design loadings are summarized in SAR Appendix 3.9.9, Tables 3.9.9-1 and 3.9.9-2.

#### 3.3.1.3 OS187H Transfer Cask

For normal operation, the OS187H TC is analyzed for all normal loads such as the dead weight, $115^o$ F hot ambient and $-20^o$ F cold ambient environments, 30 psig internal pressures, vacuum drying conditions, and transfer loads. In addition, the OS187H TC is analyzed for a 6g vertical lifting load. Loads that could coexist or be developed during normal operations are combined to simulate the worst loading condition for evaluation. The load combinations are summarized in a load table on SAR Page 3.9.2-18 of Appendix 3.9.2.

### 3.3.2 Analysis Methods

#### 3.3.2.1 DSC Normal Condition Structural Analysis

The fuel basket and the DSC canister shell assembly are analyzed independently as shown in Appendix 3.9.1 of the application. Three separate finite element models are constructed for the structural evaluation of the fuel basket and four finite element models are used for the structural evaluation of the shell assembly.

The basket stress analysis is performed for normal condition loads during fuel transfer and storage. Finite element structural analysis is performed for the transfer, handling, storage dead weights, and both transfer and storage thermal loads. A 3-dimensional cross-section finite element model is utilized to evaluate the effects of transverse inertial loads on the fuel basket. For vertical dead weight or inertial loads, analytical hand calculations are used for the basket stress analysis.

An enveloping technique of combining various individual loads in a single finite element analysis has been used for the shell assembly stress analysis for several load combination loading conditions. This approach reduces the number of computer runs. However, for some loading combinations, the stress intensities under individual loads are added together to obtain the resultant stress intensities for the specified combined loads. The ANSYS calculated stresses are the total stresses of the combined membrane, bending, and peak stresses. The calculated total stresses are conservatively taken to be either membrane stresses (e.g., $P_m$) and/or membrane plus bending stresses ($P_L + P_b$) and evaluated against their corresponding ASME code stress limits.

The structural integrity of damaged fuel cladding for normal condition and off-normal loading conditions of storage and on-site transfer (required for Part 72) is evaluated in SAR section 3.9.8. TN also evaluated a one-foot side drop condition in SAR section 3.9.8 (provided to support a Part 71 certification). The staff's review is limited to 10 CFR Part 72, therefore, the staff reviewed the structural integrity of damaged fuel cladding for the normal and off-normal loading conditions associated with 10 CFR Part 72 and has found this analysis acceptable. The one-foot side drop analysis contained in SAR section 3.9.8 has not been reviewed by the staff because it is not needed to support a 10 CFR Part 72 certification. Therefore, the staff expects the one-foot side drop and the one-foot end drop and vibratory loading conditions to be addressed in the 10 CFR Part 71 application.

#### 3.3.2.2 HSM-H Normal Condition Structural Analysis

The structural analysis of the HSM-H is based on the bounding values of loads and load combinations. For example, the upper bound weight of the 32PTH DSC (110.0 kips) is used for HSM-H stress evaluation and the lower bound weight of the DSC (72.0 kips) is used for the stability evaluation of the HSM-H. The 32PTH DSC is designed for a maximum heat load of 34.8 kW. However, the design basis thermal load for the HSM-H is based on a bounding value of 40.8 kW decay heat loads as shown in Chapter 3, Section 3.6.2.

Structural evaluation of the HSM-H is the same as presented in Amendment 8 to CoC 1004 for the 24PTH DSC and is included in Appendix 3.9.9, of Chapter 3 of the SAR. A 3–dimensional finite element model of the HSM-H, which includes all the concrete components (rear wall, front wall, two side walls and the roof) was developed for the ANSYS computer program. The DSC was modeled using the beam elements. Plots of the model, which includes the concrete structure and support structure, are shown in Figures 3.9.9-1 through 3.9.9.3. The connection between the HSM-H concrete structure and the door are designed to allow thermal growth of the door. Thus, the analytical model of the HSM-H for thermal and for thermal stress analysis of the concrete components does not include the door. The ANSYS model for thermal stress analysis is shown in Figure 3.9.9-4.

#### 3.3.2.3 OS187H Transfer Cask Normal Condition Structural Analysis

The OS187H transfer cask structural analyses are based on static or quasi-static linear elastic methods. The stresses and deformations due to the applied loads and load combinations are determined by finite element analysis using the ANSYS computer code. The top cover and the ram access cover bolts are evaluated using the methodology presented in NUREG/CR-6007, "Stress Analysis of Closure Bolts for Shipping Casks." The bolts are analyzed for the bolt preload, gasket seating load, internal pressure, and thermal loads due to temperature changes.

SAR Chapter 3, Appendix 3.9.6 presents the evaluation of the stresses in the NUHOMS® -OS187H transfer cask neutron shield due to all applied loads during fuel loading and transfer operations. A finite element model has been built for the structural analysis of the outer neutron shield shell, end closure, central plates and the transfer cask structural shell. These structural components were modeled with two-dimensional axisymmetric elements. Figures 3.9.6-1, 3.9.6-2 and 3.9.6-3 in SAR Chapter 3, Appendix 3.9.6 show the details of the finite element model of the neutron shield.

### 3.3.3 Analysis Results

The NUHOMS® 32PTH DSC shell assembly has been shown to meet the appropriate material stress allowable for the service level A in the ASME Boiler and Pressure Vessel Code, Section III, Division 1, Subsection NB, for Class 1 Components. The maximum calculated DSC shell stresses induced by normal storage loads are summarized in SAR Appendix 3.9.1, Tables 3.9.1-20, and 21. The calculated stresses in the canister shell due to normal transfer loading conditions are summarized in SAR Appendix 3.9.1, Tables 3.9.1-11, 12, 15, and 16. It is seen that the calculated stresses are less than the code allowable stresses.

The fuel basket stress analysis is performed for normal condition loads during fuel transfer and storage. The calculated stresses in the 32PTH DSC fuel basket under normal conditions are summarized and compared with the corresponding ASME code allowable stresses for transfer load cases in SAR Appendix 3.9.1, Table 3.9.1-3 and storage load cases in SAR Appendix 3.9.1, Table 3.9.1-5. Based on these stress analyses, the 32PTH DSC basket is structurally adequate with respect to normal condition transfer and storage loads.

The design of the HSM-H for the 32PTH DSC is the same as the HSM-H for 24PTH DSC (Amendment 8, CoC 1004). The analyses performed for the HSM-H with 24PTH DSC has used bounding values to envelop both 24PTH DSC and 32PTH DSC. Detail geometry descriptions,

material properties, loadings, and structural evaluation of the HSM-H are presented in SAR Appendix 3.9.9. Comparison of the highest combined shear forces and moments with the reinforced concrete component capacities are presented in Table 3.9.9-11.

The OS187H transfer cask structural analyses are based on linear elastic methods using the ANSYS computer code. SAR Table 3.9.2-1 of Appendix 3.9.2 summarizes the maximum stresses in the Transfer Cask Body computed for normal conditions of transfer. The maximum stresses in each component are listed along with the normal loading condition that generates the stress. The stresses are evaluated against the ASME Code Subsection NC for Class 2 Components and Service Level A Limits.

## 3.4 Off-Normal and Accident Conditions

### 3.4.1 The 32PTH DSC Off-Normal and Accident Conditions Structural Analysis

#### 3.4.1.1 The 32PTH Fuel Basket

The basket stress analyses are performed using a finite element method for the transfer side drop impact loads, as well as, storage seismic loads, and both the transfer and storage thermal load cases. A 3-dimensional cross-section finite element model is utilized to evaluate the effect of transverse inertial loads on the fuel basket. The calculated stress in the 32PTH DSC fuel basket is summarized and compared with the corresponding ASME code allowable stresses. Table 3.9.1-4a and 3.9.1-4b of SAR Chapter 3 Appendix 3.9.1 have shown the stresses summaries for the transfer accident loads and Table 3.9.1-5 for the storage accident loads.

The application provided structural evaluation of undamaged Zircaloy clad fuel cladding stresses due to hypothetical cask drops in SAR section 3.5.3 as follows:

(a) Side Drop

The fuel rod stresses due to the 75g side drop are calculated in TN's response to Part B of the staff's second round RAI 3-13, dated March 25, 2005. TN developed an ANSYS computer model in which the fuel rod was idealized as a continuous beam over multiple supports. The exact dimensions between grid spacers and grid spacer width were modeled. Only the cladding was considered to resist bending, and cladding thickness was reduced by more than 10% to account for cladding oxidation. The full weight of the fuel was included. The results of the analysis, presented in Table 2 of the RAI response, show that the maximum bending stress (66,642 psi) plus the axial stress due to internal pressure (10,289 psi) is 76,931 psi. This stress is less than the yield stress for high burnup fuel cladding, which the staff estimates to be slightly greater than 77,000 psi, considering the effects of temperature and strain rate. Using yield strength as a measure of cladding integrity is conservative. The staff finds the applicant's assumptions and analyses reasonable and concur with the conclusion that fuel rod integrity is maintained during the 75g side drop.

(b) End or Corner Drops

The end and corner drops are generally not considered credible during storage and transfer operations because the cask will always be in the horizontal orientation. The staff finds this

assumption meets the requirements of 10 CFR Part 72; however, an additional safety review by the user of the casks is necessary to demonstrate fuel cladding integrity under 10 CFR Part 50 or to demonstrate that the drop accidents are not credible. In addition, this accident scenario may be credible during transport operations governed under 10 CFR Part 71. Therefore, if these casks will be used for transport operations governed under 10 CFR Part 71, the staff expects that this scenario will be addressed in the 10 CFR Part 71 application for the casks.

### 3.4.2 HSM-H Off-Normal and Accident Conditions Structural Analysis

The structural analysis of the HSM-H is based on the bounding values of loads and load combinations. A 3–dimensional finite element model of the HSM-H, which includes all the concrete components (rear a wall, front wall, two side walls and the roof) was developed for the ANSYS computer program. The DSC was modeled using the beam elements. Engineering plots of the model which includes the concrete structure and support structure are shown in Figures 3.9.9-1 through 3.9.9.3. The connection between the HSM-H concrete structure and the door are designed to allow thermal growth of the door. Thus, the analytical model of the HSM-H for thermal and for thermal stress analysis of the concrete components does not include the door. The ANSYS model for thermal stress analysis is shown in SAR Chapter 3, Appendix 3.9.9, Figure 3.9.9-4. Section 4.7 of this SER evaluates the thermal modeling of the concrete. The maximum concrete temperature reported during the blocked vent event was above the limit specified by the applicant. TS 5.5 requires that the concrete used to fabricate the HSM-H module will be tested at an elevated temperature to demonstrate that the concrete will perform satisfactorily.

To determine the required strength (i.e., internal axial forces, shear forces, and bending moments) for each HSM-H concrete component, linear elastic finite element analyses are performed. The individual load analysis results of the HSM-H concrete structure are presented in Table 3.9.9-8,9 and 3.9.9-10. The load combination results for each component are presented in Table 3.9.9-11 for the load combinations defined in Table 3.9.9-3. Thus, it can be seen that the design capacity of the HSM-H is greater than the strength required for the worst load combination by comparing the analysis results with the corresponding design strength of the HSM-H.

### 3.4.3 Transfer Cask Off Normal and Accident Condition Structural Analysis

#### 3.4.3.1 The OS187H Transfer Cask Body

The OS187H transfer cask body includes the cylindrical shell assembly, the bottom assembly, the top cover, and the trunnions. The cask body is analyzed by static or quasi-static linear elastic analysis. The stresses and deformations due to the applied loads are determined by the ANSYS computer program. The impact load for the hypothetical cask side drop accident is conservatively assumed to be 75g. The application performed dynamic impact analysis using LS-DYNA3D on a cask-pad-soil finite element model as described in NUREG/CR-6608. The LS-DYNA results show that the maximum impact load is 62.9g for the side drop and 15.5g for a corner drop. Detail of the dynamic impact analysis is presented in SAR Chapter 3, Appendix 3.9.10.

The maximum stresses in each of the major components of the transfer cask are reported for each load case and load combination in SAR Chapter 3, Appendix 3.9.2, Table 3.9.2-1. The results are evaluated against the allowable stress limits of ASME Code Subsection NC for Class 2 components. Based on the stress evaluation, it can be concluded that the design of the OS187H transfer cask body is structurally adequate with respect to off-normal and hypothetical accident transfer loads.

#### 3.4.3.2 Transfer cask Lead Slump Analysis

During a hypothetical accident condition end drop, permanent deformation of the lead gamma shield may occur. SAR Chapter 3 Appendix 3.9.4 presents the transfer cask lead slump evaluation. The load considered is a 75g top and bottom end drop load in the hot (115$^{o}$ F) ambient environments.

The lead gamma shield is supported by friction between the lead and the transfer cask shells, in addition to bearing at the end of the lead column. A 2-dimensional axisymmetric ANSYS finite element model is constructed for this analysis. Figures 3.9.4-14 and 3.9.4-15 of SAR Chapter 3 Appendix 3.9.4 show the deformed shape of the transfer cask for 75g top and bottom end drops. The maximum calculated lead slump is 0.833 inches. The effect of lead slump on the shielding ability of the transfer cask is evaluated in Chapter 5 Shielding Evaluation.

#### 3.4.3.3 Transfer Cask Inner Shell Buckling Analysis

The buckling evaluation of the OS187H Transfer Cask inner shell is presented in SAR Chapter 3 Appendix 3.9.4. The loads considered includes lateral pressure of lead and a 75g top and bottom end drop loads in hot (115$^{o}$ F) ambient environments.

An ANSYS elastic-plastic buckling analysis is performed for the transfer cask end drop cases. A 200g drop load is applied to the model. This 200g drop load was ramping in small load increments. The ANSYS solution was set to stop and exit at any load sub-step that fails to result in a converged solution. The failure of convergence represents the onset of buckling of the structure. The loads applied in the last converged load sub-step is then considered to be the buckling load of the structure. The ANSYS solutions have converged at 189g for the top end drop and 178g for the bottom end drop. Since the ANSYS solutions have converged above the assumed 75g end drop loads, the inner shell will not buckle during a hypothetical end drop.

### 3.5 Evaluation Findings

F3.1 The NUHOMS® HD System is described in sufficient detail to enable an evaluation of its structural effectiveness and is designed to accommodate the combined loads of normal, off-normal, accident and natural phenomena events.

F3.2 The NUHOMS® HD System is designed to allow handling and retrieval of spent nuclear fuel for further processing or disposal. The staff concludes that no accident or natural phenomena events analyzed will result in damage of the NUHOMS® -32PTH DSC that will prevent retrieval of the DSC.

F3.3 The NUHOMS® HD System is designed and fabricated so that the spent fuel is maintained in a subcritical condition under credible conditions. The configuration of the stored spent fuel is unchanged. Additional criticality evaluations are discussed in Section 6 of this SER.

F3.4 The NUHOMS® -32PTH DSC is evaluated to demonstrate that it has a redundant seal and that it will reasonably maintain confinement of radioactive material under normal, off-normal, and credible accident conditions.

F3.5 The NUHOMS® HD System is evaluated and tested to demonstrate that the system has adequate heat removal capacity without active cooling system. Thermal evaluations are discussed in Section 4 of this SER

F.3.6 The SAR describes the materials that are used for structures, systems, and components (SSCs) important to safety and the suitability of those materials for their intended functions in sufficient detail to facilitate evaluation of their effectiveness.

F.3.7 The design of the DSC and the selection of materials adequately protects the spent fuel cladding against degradation that might otherwise lead to gross rupture.

F.3.8 The DSC employs noncombustible materials which will help maintain safety control functions.

F.3.9 The materials that comprise the DSC will maintain their mechanical properties during all conditions of operation.

F.3.10 The DSC employs materials that are compatible with wet and dry spent fuel loading and unloading operations and facilities. These materials are not expected to degrade over time, or react with one another, during any conditions of storage.

F3.11 The staff concludes that the structural design of the NUHOMS® HD System is in compliance with 10 CFR Part 72 and that the applicable design and acceptance criteria have been satisfied. The structural evaluation provides reasonable assurance that NUHOMS® HD System will enable safe storage of spent fuel. This finding is based on a review that considered the regulations, appropriate regulatory guides, applicable industry codes and standards, accepted practice and confirmatory analysis.

### 3.6 References

1. U.S. Code of Federal Regulations, “Licensing Requirements for the Independent Storage of Spent Nuclear Fuel, High-Level Radioactive Waste, and Reactor-Related Greater Than Class C Waste,” Title 10, Part 72.

2. ASME Boiler and Pressure Code, Section III, Division 1, “Rules for Construction of Nuclear Power Plant Components.”

## 4.0 THERMAL EVALUATION

The staff reviewed the NUHOMS® HD thermal design and performed independent confirmatory calculations to ensure that the cask and fuel material temperatures are within their allowable values or criteria for normal, off-normal, and accident conditions, as required in 10 CFR Part 72 (Reference 1). The staff's independent analysis confirmed that the temperatures of the fuel cladding (fission product barrier) will be maintained below the acceptable limits throughout the licensed storage period. The staff's review followed, as appropriate, guidance outlined in Section 4 of NUREG-1536, "Standard Review Plan for Dry Cask Storage Systems" (Reference 2) as well as any associated ISG documents.

### 4.1 Spent Fuel Cladding

The predicted fuel cladding long term storage and short term operations temperatures were found to be below the expected damage thresholds identified in Tables 4-1 through Table 4-4, and Tables 4-8 through Table 4-9 of the SAR. The staff reviewed the discussion on material temperature limits with respect to the requirements contained in 10 CFR 72.122(h)(1), 10 CFR 72.122(l) and 10 CFR 72.236(m). The requirements of 10 CFR 72.122 (h)(1) seek to ensure safe fuel storage and handling and to minimize post-operational safety problems with respect to the removal of the fuel from storage. In accordance with this regulation, the spent fuel cladding must be protected during storage against degradation that leads to gross rupture of the fuel and must be otherwise confined such that degradation of the fuel during storage will not pose operational problems with respect to its removal from storage. Additionally, 10 CFR 72.122(l) and 72.236(m) require that the storage system be designed to allow ready retrieval of the spent fuel from the storage system for further processing or disposal.

The Spent Fuel Project Office's Interim Staff Guidance (ISG) 11 Revision 3, "Cladding Considerations for the Transportation and Storage of Spent Fuel," (Reference 3) provides guidance regarding temperature limits of the spent fuel cladding that will demonstrate compliance with the 10 CFR Part 72 regulations. ISG-11 establishes that a maximum fuel cladding temperature limit of 752 °F (400 °C) is applicable to both normal storage conditions and short term loading operations. This temperature limit ensures that circumferential hydrides in the cladding will not dissolve and go into solutions during fuel loading operations, and that re-precipitation of radial hydrides do not occur in the cladding during storage. (See Interim Staff Guidance-11, Rev. 3 for a discussion on hydride reorientation.) High burnup fuel (i.e., fuel with burnups generally exceeding 45 GWd/MTU) may have cladding walls that have become relatively thin from in-reactor formation of oxides or zirconium hydride. Fuel with burnup greater than 60 GWd/MTU is unacceptable for storage in the NUHOMS® HD system.

Thermal cycling of cladding temperature with differences greater than 117 °F (65 °C) during drying or backfilling operations is not permitted per ISG-11. The maximum fuel cladding temperature limit of 1058 °F (570 °C) is applicable only for accident or off-normal thermal transient conditions. For the NUHOMS® HD unloading operation, the maximum fuel cladding temperature during cask reflood is calculated to be significantly less than the vacuum drying condition because of the presence of water vapor. Consequently, during cask reflood, a lower temperature rise is expected when compared to the cask vacuum drying operations.

## 4.2 Cask System Thermal Design

### 4.2.1 Design Criteria

To establish the heat removal capability, several thermal design criteria are established for the system. These are:

- Maximum temperatures of the confinement structural components must not adversely affect the confinement function.

- To maintain the stability of the neutron shield resin in the transfer cask (TC) during normal transfer conditions, a maximum allowable average temperature of 300°F (149°C) is set for the neutron shield material.

- A maximum fuel cladding temperature limit of 752 ºF (400 ºC) has been established for normal conditions of storage and for short-term storage operations such as transfer and vacuum drying. During off-normal storage and accident conditions, the fuel cladding temperature limit is 1058 ºF (570 ºC).

- A maximum temperature limit of 620 ºF (327 ºC) is considered for the lead in the transfer cask, corresponding to the melting point.

- The ambient temperature range for normal operation is 0 to 100 ºF (-18 to 38 ºC). The minimum and maximum off-normal ambient temperatures are -20 ºF (-29 ºC) and 115 ºF (46 ºC), respectively. In general, all the thermal criteria are associated with maximum temperature limits and not minimum temperatures. All materials can be subjected to a minimum environment temperature of -20 ºF (-29 ºC) without adverse effects.

- The maximum DSC internal pressure during normal and off-normal conditions must be below the design pressures of 15 psig and 20 psig, respectively. For accident cases, the maximum DSC internal pressure must be lower than 70 psig during storage and lower than 120 psig during transfer operation.

### 4.2.2 Design Features

The NUHOMS® HD is designed to store 32 intact standard PWR fuel assemblies or up to 16 damaged fuel assemblies with the remaining intact with or without Non-Fuel Assembly Hardware (NFAH) as described in Section 2 of the SAR. The characteristics of the spent fuel to be stored in the NUHOMS® HD cask (average burnup, initial enrichment and cooling time) are described in Appendix 4.16.2 of the SAR. The DSC is evacuated and backfilled with helium at the time of loading. The DSC is designed to passively reject decay heat during storage and transfer for normal, off-normal and accident conditions while maintaining component temperatures and pressures within the limits specified by the applicant in the SAR.

## 4.3 Thermal Load Specifications

The maximum total decay heat load per DSC is 34.8 kW, with a maximum per assembly heat load of 1.5 kW when zoning (preferential loading) is used to distribute the heat load in a

nonuniform manner. For CE14x14 fuel assembly types, the maximum total heat load is limited to 33.8 kW. The loading configurations, based on the decay heat that is approved by the staff, are presented in Figure 4-15 of the SAR. The loading requirements described in Section 4.3.1.3 of the SAR are used to develop the bounding loading configurations.

## 4.4 Model Specifications

### 4.4.1 Thermal Properties of Materials

Material property tables for the DSC shell, basket, transfer cask, and HSM are included in Section 4.2 of the SAR. The temperature range for the material properties cover the range of temperatures encountered during the thermal analyses. The material properties were verified against material references to be accurate.

### 4.4.2 Use of Effective Thermal Conductivity Models

#### 4.4.2.1 Spent Fuel Effective Thermal Conductivity

The applicant developed models to simulate the effective thermal properties of the fuel with a homogenized material occupying the entire volume within the basket by using the total fuel active length. The calculated effective thermal conductivity of the fuel assemblies takes credit for conduction and radiation heat transfer only. The bounding fuel assemblies for the transverse and axial conductivities, densities, and specific heats are described in Section 4.8.3 of the SAR. These assemblies were verified by staff to be bounding.

#### 4.4.2.2 Effective Conductivity of Water-Filled Annulus between TC and DSC

The applicant assumed convection in the annulus can be approximated as convection in a vertical rectangular cavity and applied a correlation to calculate the combination of convection and conduction heat transfer in vertical rectangular cavities. According to the applicant's calculations, the presence of convection with the water will enhance the thermal conductivity by a factor of 1.1 to 3 over that computed assuming conduction only through the water-filled annular region.

#### 4.4.2.3 Neutron Shield Region Effective Thermal Conductivity

The neutron shield of the OS187H transfer cask is a water filled annular region that surrounds the cask's structural shell. Annular rings act to divide the water region within the neutron shield into multiple enclosure regions. Effective thermal conductivity values for these enclosures are obtained by considerating a combination of conduction and convection heat transfer through these regions. Using a series of correlations that were developed to model the heat transfer inside the water region, the applicant computed effective thermal conductivities as a function of the axial length, but not the angular position around the cask circumference. According to the applicant's calculations, the presence of convection with the water will enhance the thermal conductivity by a factor of 20 to 30 over that computed assuming conduction only through the shield region.

In response to Request for Additional Information (RAI 4-4) (Reference 4), the applicant provided a computational fluid dynamics (CFD) calculation (Reference 5). The applicant used the CFD calculation to directly determine the flow regime pattern that would exist within the neutron shield at various circumferential positions around the transfer cask. However, after reviewing the applicant's CFD model, the staff identified several issues regarding the applicant's modeling approach to the problem. The staff discussed these issues with the applicant in a telecom on May 7, 2005, and the applicant agreed to review the analysis to address the staff's concerns.

On May 24, 2005, the applicant provided Revision 1 to the CFD calculation (Reference 6). However, after reviewing the applicant's CFD model, the staff was again unable to confirm the adequacy of the applicant's CFD model used to validate the SAR approach (use of heat transfer correlations to obtain effective thermal conductivity values for the neutron shield region). Because the staff has some concerns on the submitted CFD calculations, the staff concludes that the CFD model submitted in response to RAI 4-4 should not be used for future amendment requests.

Nevertheless, the staff has determined that the heat transfer parameters identified in the SAR and the use of these parameters by the applicant in performing analysis were acceptable. The staff also performed a confirmatory analysis of the OS187H transfer cask. The staff's analysis confirmed that loading of a 32PTH with the design basis heat load in the OS187H transfer cask met the temperature limits for long term storage.

### 4.4.3 Boundary Conditions

Thermal analyses were performed for normal conditions involving the following cases:

- maximum normal temperature of 100°F (37.3 °C) with insolation
- minimum normal temperature of 0°F (-17.7 °C) without insolation

Radiation and convection boundary conditions are applied to the DSC thermal model. Off-normal conditions for storage and transfer that were analyzed included:

- maximum temperature of 115°F (46.1 °C) with insolation
- minimum normal temperature of -20°F (-28.9 °C) without insolation

From previous analyses of the HSM and TC, radiation and convection boundary conditions are applied to the DSC thermal model. Because the off-normal condition bounds the normal condition, only the off-normal temperatures were reported in the SAR.

Steady state, off-normal conditions were assumed prior to the fire accident analysis. A fire temperature of 1475 °F (801.6 °C) with emittance of 0.9, and a duration of 15 minutes (based on a full consumption of a 300 gallon diesel fuel source) with complete engulfment of the TC for the duration of the fire accident was assumed.

### 4.4.4 Model Configurations

Model dimensions were verified according to the drawings provided in SAR proprietary drawings. The confirmatory model was also prepared using the proprietary drawings, and matched against the applicant's model. To model the contact resistance between two pieces of metal, a gap was considered. The dimensions of these gaps are listed and justified in Section 4.10 of the SAR. All heat transfer across these gaps are by gaseous conduction through the helium backfill gas. Assurance of retaining the backfill gas inside the DSC is achieved by meeting the leak tight criteria. The applicant's model incorporated the effect of the decay heat varying axially along a fuel assembly. The axial heat flux profile utilized is based on the report entitled "Topical Report on Actinide-Only Burnup Credit for PWR Spent Nuclear Fuel Packages," Office of Civilian Radioactive Waste Management, DOE/RW-0472, Revision 2, September 1998.

Within the 3–dimensional DSC model, heat is transferred via conduction from the fuel basket region to the outer shell region. All heat transfer across the gaps between the plates is by gaseous conduction. The applicant conservatively neglected conduction through some of the gaps between the basket rails. The applicant modeled the DSC using ANSYS finite element analysis code. This code has been verified by NRC staff to be capable of solving steady state and transient thermal analysis in three dimensions.

## 4.5 Evaluation of Cask Performance for Normal Conditions

The maximum fuel cladding temperature for long term storage is evaluated by the applicant for each of the seven decay heat loading zoning configurations that are shown in Figure 4-15 of the SAR. The results obtained are compared with the corresponding ISG-11 fuel cladding temperature limits for long term storage. According to the results presented in this table, the bounding case corresponds to Type II basket, Configuration 1, which is shown in Table 4-1 of the SAR. For this case a margin of 29 $^{o}$F (16.1 $^{o}$C) against the allowable limit of 752 $^{o}$F (400 $^{o}$C) per ISG-11 was calculated by the applicant for the maximum fuel cladding temperature. However, all the configurations produce maximum temperatures that are within 23 $^{o}$F (12.8 $^{o}$C) of each other. The predicted fuel cladding temperatures for long term storage and normal transfer conditions are not given in the SAR because they are bounded by the off-normal conditions. Under the minimum temperature condition of -20 $^{o}$F (-28.9 $^{o}$C), the SSCs important to safety continue to perform their safety function. The maximum calculated pressure without BPRAs for normal storage conditions is 4.8 psig (5.9 psig with BPRAs), and for normal transfer conditions is 5.3 psig (6.4 psig with BPRAs). These pressures are well below the design pressure of 15 psig.

## 4.6 Evaluation of Cask Performance for Off-Normal Conditions

Maximum calculated temperatures for off-normal storage and transfer are given in Table 4-1 through Table 4-4 of the SAR. According to these tables, the maximum calculated temperature of 723 $^{o}$F (383.9 $^{o}$C) was obtained for the transfer case of Loading Configuration 1 Type II basket. Because the off-normal ambient temperature is higher than the normal ambient temperature, the peak temperature for the off-normal condition bounds the normal condition peak temperature. For off-normal conditions the maximum fuel cladding temperatures are below the allowable fuel cladding temperature limit of 752 $^{o}$F (400 $^{o}$C).

The maximum calculated pressure for off-normal conditions corresponds to 9.2 psig (11.2 psig with BPRAs), which is below the DSC off-normal condition design pressure of 20 psig. The average (bulk) temperature in the liquid neutron shield annulus (water region) is 265 ºF (129 ºC). This corresponds to a pressure of 23.8 psig. This pressure is less than the set point of the pressure relief valves (40 psig).

### 4.7 Evaluation of Cask Performance for Accident Conditions

The maximum fuel cladding temperature for the fire accident during the transfer case is 1036 ºF (557.8 ºC), which is below the maximum limit of 1058 ºF (570 ºC). The maximum calculated fuel cladding temperature for the blocked vent event after 34 hours is 823 ºF (439.4 ºC), which is below the maximum limit of 1058 ºF (570 ºC). The maximum concrete temperature reported during the blocked vent event was above the limit specified by the applicant. TS 5.5 requires that the concrete used to fabricate the HSM-H module will be tested at an elevated temperature to demonstrate that the concrete will perform satisfactorily.

The maximum calculated pressure without BPRAs for the accident conditions corresponds to 74.8 psig, which is less than the DSC design pressure limit of 120 psig. The maximum calculated pressure with BPRAs for the accident conditions corresponds to 91.0 psig, which is less than the DSC design pressure limit of 120 psig. The calculated maximum fire transient DSC surface temperature is 790 ºF (421 ºC). Therefore, the NUHOMS® HD DSC temperatures and pressure calculations for the accident conditions are below the maximum allowable limits.

### 4.8 Evaluation of Cask Performance for Loading/Unloading Conditions

The maximum cladding temperature reached after 12 hours of completion of vacuum drying when applying Procedure B (as described in the SAR) is 751 ºF (399.5 ºC). Therefore, backfilling of the transfer cask must start immediately after completion of the vacuum drying if Procedure B is chosen to assure that the maximum cladding temperature remains well below the maximum limit of 752 ºF (400 ºC) per ISG-11. The NUHOMS® HD DSC only undergoes a one time temperature drop during the backfilling of the DSC with helium gas. Because this is a one time event, the DSC does not undergo any thermal cycling. The maximum fuel cladding temperature during cask reflooding operations will be significantly less than the vacuum drying condition because of the presence of water and/or steam in the DSC cavity.

### 4.9 Analysis of the HSM Module

The applicant's HSM module analysis model is described in Sections 4.3.1.2, 4.11, 4.12, and 4.13 of the SAR . The analysis utilizes the ANSYS finite element code with several stack effect calculations to characterize aspects of the flow through the module (see SAR Section 4.13). The staff expressed some concerns about the accuracy of this model and of similar calculations in previous applications (Reference 7). In previous applications (Reference 7), the applicant responded by conducting a confirmatory analysis using a different modeling approach (a robust computational fluid dynamics (CFD) program (FLUENT)) to predict the DSC surface and module temperatures, and the module flow patterns. The CFD results (SAR Table P.4-40 of Reference 7) were similar to the ANSYS results for the DSC shell and module base concrete temperatures. However, the CFD results for the roof concrete and top and side heat shields were higher than the ANSYS results (the side heat shield temperature prediction was 44°F higher). The applicant

stated that the side heat shield temperature difference is directly related to a modeling simplification (that is, the exclusion of the side heat shield fins). The staff agrees that the simplification could be a significant cause for the difference. However, the simplification could have an effect on the flow patterns in the module, which could adversely affect the temperature distribution in the module and on the DSC surface.

To address staff concerns (and to validate the analysis approach), the applicant conducted a series of tests on a full scale mockup of the module and DSC shell. These tests demonstrated that the methodology used to evaluate the thermal performance of the module conservatively overestimated the DSC surface temperatures, but underestimated the temperatures of significant portions of the concrete and heat shields.

The applicant evaluated these issues and modified the model to better predict component temperatures. In addition, the applicant recommended a limit on geometry changes to ensure that the final methodology could accurately predict the thermal characteristics of a modified module.

The staff reviewed the applicant's test protocols and results, and the modified module analysis and found reasonable assurance that the final predictions provided conservative temperatures for the DSC shell and acceptable temperatures for the concrete and heat shields.

### 4.10 Staff's Confirmatory Analysis of the NUHOMS® HD DSC

Confirmatory analyses of the NUHOMS® HD DSC thermal design, using ANSYS finite element analysis code, and CFX computational fluid dynamics code, were performed by the staff as an independent evaluation of the thermal analysis presented in the applicant's SAR. The staff's 2–dimensional and 3–dimensional finite element model explicitly modeled the complex fuel basket arrangement with all gaps assumed between any pieces of metal that were not welded together. It also included an explicit representation of the DSC shell, basket support plates, poison plates, aluminum plates, aluminum transition rails, and helium cover gas. ANSYS thermal calculations were performed for normal conditions of storage. The staff's results confirmed the calculated peak cladding temperature to be below the allowable ISG-11 limit as it was predicted by the applicant in the SAR.

Also, a 3–dimensional computational fluid dynamics model was developed. This model homogenized the fuel basket region, but explicitly modeled the transfer cask and the ambient air. This model was used to show the convection patterns that developed in the water region, and around the transfer cask.

Therefore, based on the review of the application and the staff's own confirmatory thermal analysis, the staff finds the applicant's thermal design of the NUHOMS® HD DSC acceptable.

### 4.11 Evaluation Findings

F4.1 Drawing 10494-72-1 of the SAR describes SSCs important to safety to enable an evaluation of their thermal effectiveness. Cask SSCs important to safety remain within their operating temperature range.

F4.2 The NUHOMS® HD DSC is designed to provide adequate heat removal capacity without active cooling systems.

F4.3 The spent fuel cladding is protected against degradation leading to gross ruptures under accident conditions by maintaining cladding temperature below 1058 ºF (570 ºC). Protection of the cladding against degradation is expected to allow ready retrieval of spent fuel for further processing or disposal.

F4.4 Based on the applicant's predictions and the staff's results that confirmed the calculated peak cladding temperature to be below the allowable ISG-11 limit, the staff finds the design acceptable.

F4.5 The staff finds that the thermal design of the NUHOMS® HD DSC is in compliance with 10 CFR Part 72. This finding is reached on the basis of a review that considered the regulation itself, appropriate regulatory guides, applicable codes and standards, and accepted engineering practices.

## 4.12 References


1. U.S. Code of Federal Regulations, "Licensing Requirements for the Independent Storage of Spent Nuclear Fuel, High-Level Radioactive Waste, and Reactor - Related Greater than Class C Waste," Title 10, Part 72.

2. U.S. Nuclear Regulatory Commission, "Standard Review Plan for Dry Cask Storage Systems," NUREG-1536, January 1997.

3. U.S. Nuclear Regulatory Commission, "Interim Staff Guidance No. 11, "Cladding Considerations for the Transportation and Storage of Spent Fuel."

4. Transnuclear, Inc., RAI Response for the NUHOMS® HD Storage System Docket No. 72-1030. E-21995, February 18, 2005.

5. Transnuclear, Inc., Confirmation of the Effective Thermal Conductivity Within the Neutron Shield of the OS187H Transfer Cask Using a CFD Method, Calculation No. 10494-87, Revision 0. March 7, 2005.

6. Transnuclear, Inc., Confirmation of the Effective Thermal Conductivity Within the Neutron Shield of the OS187H Transfer Cask Using a CFD Method, Calculation No. 10494-87, Revision 1. May 24, 2005.

7. Transnuclear, Inc., Application for Amendment No. 8 to NUHOMS® Certificate of Compliance (CoC) No. 1004 for Dry Spent Fuel Storage Casks.

## 5.0 SHIELDING EVALUATION

The staff evaluated the capability of the NUHOMS® HD system with the 32PTH DSC to provide adequate protection against direct radiation. The regulatory requirements for providing adequate radiation protection to licensee personnel and members of the public include 10 CFR Part 20 (Reference 1), 10 CFR 72.104, 72.106(b), 72.212, and 72.236(d). Because 10 CFR Part 72 (Reference 2) dose requirements for members of the public also includes effluent releases, and radiation from other uranium fuel-cycle operations, in addition to direct radiation, an assessment of compliance with these regulatory limits is evaluated in Chapter 10 of this SER.

This application was also reviewed to determine whether the NUHOMS® HD System components fulfill the acceptance criteria listed in Section 5 of NUREG-1536, "Standard Review Plan for Dry Cask Storage Systems" (Reference 3).

### 5.1 Shielding Design Features and Design Criteria

The NUHOMS® HD System, which includes a Horizontal Storage Module (HSM-H) and the OS-187H transfer cask, is based on the previously licensed Standardized NUHOMS® System. The HSM-H design is similar to the Standardized NUHOMS® storage module. The NUHOMS® HD System is designed to store up to 32 intact PWR fuel assemblies or up to 16 damaged fuel assemblies with remaining intact assemblies. The damaged fuel assemblies will be stored in the central location of the basket. The locations with damaged fuel must be closed with specially designed endcaps to contain the failed fuel.

#### 5.1.1 Shielding Design Features

The 32PTH DSC, when used with the NUHOMS® HD System provides both gamma and neutron shielding during loading, transfer, unloading, and storage operations. The 32PTH DSC consists of a 0.5-inch thick steel canister that is sealed on the bottom by an 8.75-inch thick steel bottom shield plug, and the top by a total of 12 inches of steel in both the top shield plug and cover plates. The transfer cask consists of a 0.5-inch inner steel shell, a 3.6-inch thick lead shield, a 1.5 inch to 2-inch thick outer steel shell, a 4.56-inch neutron shield, and a 0.19-inch steel skin. The transfer cask lid consists of 2 inches of a neutron absorbing borated resin, and 3.25 inches of steel. The transfer cask bottom closure consists of 2.25 inches of neutron absorbing borated resin and 2.75 inches of steel, except the ram access. The ram access is covered by a 1–inch thick steel plate.

The HSM-H is constructed of thick concrete walls and a shielded access door. The side walls are 1 foot thick with a 3 feet thick side shield wall for modules that are at the end of a row. The roof is 4 feet thick. The rear wall is also 1 foot thick with a 3 foot shield wall for modules that are configured as single rows. The front wall is 3.5 feet thick and the module door is constructed of 1-7/8 feet of concrete and 7-7/8 inches of steel. The HSM-H air inlet and outlet paths are designed to minimize radiation streaming. The staff evaluated the NUHOMS® HD System shielding design features and found them to be acceptable. The applicant's analysis provides reasonable assurance that the shielding design of the NUHOMS® HD System meets the regulatory requirements of 10 CFR Part 20, 10 CFR 72.104(a), and 10 CFR 72.106(b).

### 5.1.2 Shielding Design Criteria

The overall radiological protection design criteria are the regulatory requirements in 10 CFR Part 20 for occupational exposures and maintaining occupational exposures as-low-as-reasonably-achievable (ALARA) and 10 CFR 72.104(a) and 10 CFR 72.106(b) (via 72.226(d) for certificate of compliance holders) for doses around ISFSIs. To show compliance with these regulations, the applicant evaluated the NUHOMS® HD System loaded with spent fuel radiological characteristics shown in Table 2-3 of the SAR.

The SAR analyses provide reasonable assurance that the NUHOMS® HD System can meet the regulatory requirements in 10 CFR Part 20, 10 CFR 72.104(a), and 10 CFR 72.106(b). The applicant provided a radiation protection program in Section 12.5.4, which limits the maximum doses at the front door bird screen, door centerline and the end shield wall exterior consistent with the direct radiation calculations in Chapter 5. Based on the evaluation of an array of storage casks, the applicant has shown that storage casks that meet these dose limits can comply with the dose requirements in 10 CFR Part 72.

## 5.2 Contents and Source Specification

### 5.2.1 Contents

A detailed description of the contents for the NUHOMS® HD System can be found in Section 2.1 of the SAR. The contents consist of intact and/or damaged Westinghouse (WE) 15x15, WE 17x17, Framatome ANP Advanced (FR) 17x17 MK BW and Combustion Engineering (CE) 14x14 fuel assemblies. The fuel assemblies can also contain integral control components, including Non-Fuel Assembly Hardware (NFAH) such as Burnable Poison Rod Assemblies (BPRAs), Vibration Suppression Inserts (VSIs) or Thimble Plug Assemblies (TPAs). Additionally the storage cask can include up to 16 damaged fuel assemblies. The damaged fuel may include missing or partial rods, or rods with known or suspected cladding defects greater than hairline cracks or pinhole leaks. The extent of damage shall be limited such that a fuel assembly must be able to be handled by normal means and retrievability is assured following normal and off-normal conditions. Damaged fuel assemblies are placed in the inner most sixteen basket locations and sealed with top and bottom endcaps. Note that the applicant did not perform any shielding analyses associated with rearrangement of fuel pellets due to either normal or off-normal storage conditions causing damaged fuel rods to lose pellets. The staff accepted the revised damaged fuel definition, without any shielding analyses for rearranged fuel pellets, since the applicant shows in Section 3.9.8 that damaged fuel cladding can withstand stresses associated with normal storage and off-normal loading conditions of storage and onsite transfer required for 10 CFR Part 72 certification.

SAR Tables 2-2 and 2-3 describe the characteristics, enrichment, burnup, and cooling times of the fuel assemblies. The maximum allowable burnup is 60,000 MWD/MTU and the minimum cooling time varies from 5 years to 15 years, based on the burnup, enrichment and fuel zone location. SAR Table 2-4 describes the radiological characteristics of the NFAH.

### 5.2.2 Source Specification

The source specification is presented in Section 5.2 of the SAR. The gamma and neutron source terms were calculated with the SAS2H (ORIGEN-S) module with the 44-group ENDF/B-V cross section set in the SCALE 4.4 computer code. The applicant's source term was generated for a burnup of 60,000 MWD/MTU, a minimum enrichment of 4.0 weight percent $^{235}U$ and a minimum cooling time of 7 years. This combination of burnup, enrichment and cooling time provides up to 1500 watts of decay heat per assembly and the storage cask can only store up to eight fuel assemblies with this decay heat and radiological characteristics. In the shielding evaluation, the applicant assumed that all 32 fuel assemblies have this combination of burnup, enrichment and cooling time. If reconstituted fuel assemblies with stainless steel replacement rods undergo further irradiation cycles, their gamma source term will need to be bounded by the total design basis gamma source term documented in Table 5-10 of the SAR. Typically the source term from reconstituted fuel assemblies that receive further irradiation should be compared on an energy group basis instead of a total source term basis. Considering that the applicant has already presented a bounding source term given both the current design basis source term and the allowable source term from the fuel qualification tables (Table 4 of the TS), the staff is accepting the applicant's proposal for comparison of source terms for reconstituted fuel assemblies. If either the design basis source term is reduced or the fuel qualification tables in the TSs are revised, the staff should reconsider the method used by the applicant to evaluate cobalt source term in reconstituted fuel assemblies. Additionally, the fuel qualification tables specify the maximum assembly average enrichment for each fuel assembly. The applicant also specifies the minimum assembly average enrichment for loading fuel assemblies in each of the decay heat zones consistent with ISG-5.

Following the individual gamma and neutron source term determinations, the source terms were utilized in the shielding models to calculate dose rates around the HSM-M and transfer cask.

#### 5.2.2.1 Gamma Source

SAR Tables 5-10, 5-11 and 5-12 provide the SAS2H calculated gamma source terms for the active fuel region, TPAs and BPRAs, respectively. The hardware activation analysis considered the cobalt impurities in the assembly hardware. The amounts of impurities considered in the analysis are presented in SAR Table 5-8 and 5-9. Although cobalt impurities can vary, the applicant's assumed values are reasonable and acceptable. To correct for changes in the neutron flux outside the fuel zone during irradiation, the masses of the materials in the bottom end fitting, plenum, and top end fitting, were multiplied by scaling factors of 0.2, 0.2, and 0.1, respectively. These are the scaling factors recommended in ORNL/TM-11018, "Standard- and Extended-Burnup PWR and BWR Reactor Models for the ORIGEN2 Computer Code," and are considered to provide appropriate values. Based on these results, the MTU loading of MK BW 17x17 fuel assembly together with the BPRAs and hardware from the WE17x17, provide the design bases gamma source term.

#### 5.2.2.2 Neutron Source

The SAS2H calculated neutron source term for the fuel assemblies is provided in Table 5-13. Like the gamma source term, the applicant used the MK BW 17x17 fuel assembly to determine the neutron source term, for the same burnup, enrichment and cooling time.

#### 5.2.2.3 Confirmatory Analyses

The staff reviewed the proposed contents and the hardware cobalt impurities listed in Tables 5-8 and 5-9 of the SAR. The staff has reasonable assurance that the design basis gamma and neutron source terms are acceptable for the NUHOMS® HD System shielding analysis. The staff also reviewed the neutron flux scaling factors for the hardware source terms and found them to be appropriate. The staff performed confirmatory calculations of the source terms for the specified fuel types, burnup conditions, and cooling times. The staff also used the SAS2H module of SCALE 4.4 with the 238-group cross section library. The staff's source term calculations were in agreement with the applicant's.

The exterior dose rates for both the OS-187H transfer cask and the HSM-H are adequately controlled by the limits in the Certificate of Compliance for fuel specifications, maximum burnup, and minimum cooling time.

## 5.3 Shielding Model Specifications

The shielding analyses to determine dose rates around a single HSM-H and transfer cask were performed with MCNP, a three dimensional Monte Carlo code for determining transport of neutrons and gammas. The applicant evaluated three dimensional models for both the HSM-H and the transfer cask.

### 5.3.1 Shielding and Source Configuration

The source is divided into 18 axial regions as shown in Table 5-20. The axial distribution of the gamma and neutron sources is assumed to follow the relative burnup profile from Reference 4 of Chapter 5. A number of other simplifications and bounding assumptions are discussed in Section 5.4 of the SAR. The analysis includes modeling and evaluating dose rates from potential streaming paths through the HSM-H air vents.

### 5.3.2 Material Properties

The composition and densities of the materials used in the shielding analysis are presented in Tables 5-15 through 5-19. The homogenized fuel assembly region accounts for the uranium dioxide; cladding and spacers; and steel and other materials present in the incore region of the assembly and associated hardware.

The materials used in modeling the 32PTH DSC, transfer cask, and HSM-H were reviewed and accepted by the staff. The material compositions and densities used were appropriate and provide reasonable assurance that the materials densities were adequately modeled.

## 5.4 Shielding Analyses Results

### 5.4.1 Computer Programs

The applicant's shielding analysis was performed with MCNP and is presented in Section 5.4 of the SAR. MCNP is a pointwise code and was used to determine the gamma and neutron dose rates on the surface of the HSM-H and at 1 and 3 feet from the transfer cask.

### 5.4.2 Flux-to-Dose-Rate Conversion

The applicant used the ANSI/ANS Standard 6.1.1-1977 flux-to-dose conversion factors to calculate dose rates. The values listed in this standard are provided in Table 5-14.

### 5.4.3 Normal Conditions

Tables 5-21 through 5-23 of the SAR present the maximum and average normal condition dose rates for the HSM-H, welding and the transfer cask during, storage, welding and decontamination activities and transfer of the canister from the transfer cask to the storage module. Based on the assumptions used in the analyses, the source term and cooling time of the design basis contents, and the administrative programs established in Section 5.4 of the TSs; the staff has reasonable assurance that the user will be able to maintain normal-condition doses ALARA and meet the dose requirements of 10 CFR Part 72.

The expected dose rates for the HSM-H are shown in Table 5-21 and are generally dominated by the gamma component. This is expected due to the thick concrete walls of the HSM-H. The peak dose rates around the HSM-H are 752 mrem/hr on the front bird screen and 15.1 mrem/hr through the roof. The fluxes causing these dose rates are utilized in Chapter 10 to determine off-site doses.

The expected dose rates for the transfer cask are shown in Tables 5-22 and 5-23. While the gamma component dominates the dose rates, for most locations, there is still a significant contribution from neutron radiation. The surface peak dose rate at the top of the transfer cask is 1050 mrem/hr during welding operations on the inner canister lid, when the transfer cask lid is off. Exposure from localized peak dose rates may be mitigated by the actual locations of personnel and use of temporary shielding during welding and decontamination operations. The doses for the expected occupational exposures are discussed in Section 10.3 of the SAR.

### 5.4.4 Off-Normal

Section 11 of the SAR does not identify any off-normal event that significantly degrades the components of the NUHOMS® HD System. For loading and unloading operations, the stresses on the 32PTH DSC shell assembly components are demonstrated in Section 3 of the SAR to be within ASME Code stress limits. Therefore, there is no permanent deformation of the shell. Thus, there is no potential for breach of the confinement pressure boundary or release of radioactive material. Similarly, the stress levels for the 32PTH DSC during the extreme ambient conditions are demonstrated in Section 3 of the SAR to be within the ASME Code stress limits. The HSM-H also considers stresses due to ambient temperature, and meets the provisions of the ACI code.

### 5.4.5 Accident Conditions

For accident conditions, no event is postulated that can impact the confinement boundary of the 32PTH DSC while inside the HSM-H. Accidents such as tornado missiles, which may affect the shield walls of the HSM-H, do not affect safe operation; and recovery can be performed in a planned and safe manner.

The bounding accident condition, discussed in Chapter 11, for the transfer cask considers loss of water from the transfer cask water jacket during a cask drop. The dose rates for accident conditions is 2390 mrem/hr at 1 meter from the transfer cask and 1.3 mrem/hr at 100 meters from the transfer cask. Based on the radial dose rate at 100 meters from the transfer cask during accident conditions, the storage cask will be able to meet the dose rate criterion of 5 rem (total effective dose equivalent) in 10 CFR 72.106.

### 5.4.6 Occupational Exposures

The analysis in the SAR used the design basis fuel to estimate occupational exposures for the NUHOMS® HD System. Section 10 of the SAR presents the estimated occupational exposures that are based on dose rate calculations in Section 5 of the SAR. The staff's evaluation of the occupational exposures is in Section 10 of this SER.

### 5.4.7 Confirmatory Calculations

The staff performed confirmatory analyses of selected dose rates using the SAS4 module of the SCALE system. The staff evaluation is based on the design features and specifications presented in the SAR. Limiting fuel characteristics and the burnup and cooling time are included in the Tables 1 and 3 through 5 of the TSs. The staff's calculated dose rates were in general agreement with the SAR values. The staff's dose rates were within 10% of the applicant's dose rates.

## 5.5 Evaluation Findings

F5.1 Sections 2, 5 and 10 of the SAR sufficiently describe the radiation protection design bases and design criteria for the structures, systems, and components important to safety.

F5.2 Radiation shielding and confinement features are sufficient to meet the radiation protection requirements of 10 CFR Part 20, 10 CFR 72.104, and 10 CFR 72.106.

F5.3 The NUHOMS® HD System is designed to provide redundant sealing of the confinement system.

F5.4 The staff concludes that the design of the radiation protection system of the NUHOMS® HD System, including the HSM-H, 32PTH DSC and the OS-187H transfer cask, is in compliance with 10 CFR Part 72 and the applicable design and acceptance criteria have been satisfied. The evaluation of the radiation protection system design provides reasonable assurance that the NUHOMS® HD System will provide safe storage of spent

fuel. This finding is based on a review that considered the regulation itself, the appropriate regulatory guides, applicable codes and standards, the applicant's analyses, the staff's confirmatory analyses, and acceptable engineering practices.

## 5.6 References


1. U.S. Code of Federal Regulations, "Standards for Protection Against Radiation," Title 10, Part 20, Energy.

2. U.S. Code of Federal Regulations, "Licensing Requirements for the Independent Storage of Spent Nuclear Fuel, High-Level Radioactive Waste, and Reactor - Related Greater than Class C Waste," Title 10, Part 72.

3. U.S. Nuclear Regulatory Commission, "Standard Review Plan for Dry Cask Storage Systems," NUREG-1536, January 1997.

## 6.0 CRITICALITY EVALUATION

The staff's objective in reviewing the applicant's criticality evaluation of the NUHOMS® HD system design is to verify that the spent fuel contents remain subcritical under the normal, off-normal, and accident conditions of handling, packaging, transfer, and storage. The applicable regulatory requirements are those in 10 CFR 72.24(c)(3), 72.24(d), 72.124, 72.236(c), and 72.236(g) (Reference 1).

The staff reviewed the information provided in the NUHOMS® HD SAR to determine whether the NUHOMS® HD system continues to fulfill the acceptance criteria listed in Section 6 of NUREG-1536, "Standard Review Plan for Dry Cask Storage Systems" (Reference 2):

1. The multiplication factor ($k_{eff}$), including all biases and uncertainties at a 95% confidence level, should not exceed 0.95 under all credible normal, off-normal, and accident conditions.

2. At least two unlikely, independent, and concurrent or sequential changes to the conditions essential to criticality safety, under normal, off-normal, and accident conditions, should occur before an accidental criticality is deemed to be possible.

3. When practicable, criticality safety of the design should be established on the basis of favorable geometry, permanent fixed neutron-absorbing materials (poisons), or both. Where solid neutron-absorbing materials are used, the design should provide for a positive means to verify their continued efficacy during the storage period.

4. Criticality safety of the cask system should not rely on use of the following credits:

   a. burnup of the fuel*
   b. fuel-related burnable neutron absorbers
   c. more than 75% for fixed neutron absorbers when subject to standard acceptance tests.

   *Note: Since publication of the Standard Review Plan (SRP), the NRC has developed Interim Staff Guidance 8 (ISG-8), "Limited Burnup Credit in the Criticality Safety Analyses of PWR Spent Fuel in Transport and Storage Casks" (Reference 3). Future revisions of the SRP will incorporate or reference the current staff guidance in this area.

### 6.1 Criticality Design Criteria and Features

The design criterion for criticality safety of the cask system is that the calculated value of the effective neutron multiplication factor, $k_{eff}$, including biases and uncertainties, shall not exceed 0.95 under normal, off-normal, and accident conditions.

Criticality safety of the NUHOMS® HD system depends on the geometry of the fuel baskets, the use of fixed neutron absorber panels, and the presence of soluble boron in the spent fuel pool water for absorbing neutrons. The NUHOMS® HD design includes the 32PTH Dry Shielded Canister (DSC), designed to store the 14x14, 15x15, and 17x17 PWR fuel assemblies listed in Table 6-3 of the SAR. The fuel assemblies are placed in square, stainless steel fuel tubes held

in place by aluminum panels and stainless steel straps in an egg-crate type basket design. Neutron absorber panels, consisting of borated aluminum alloy, aluminum-$B_4C$ metal matrix composite, or Boral®, are attached to the aluminum panels in the basket. There are five basket types, each with a different $^{10}B$ areal density and some with varying panel thicknesses. Only basket types A, B, and C may incorporate Boral® plates. The applicant stated that 90% credit was taken for the minimum $^{10}B$ content in the borated aluminum and aluminum-$B_4C$ metal matrix composite panels, while 75% credit was taken for the minimum $^{10}B$ content in the Boral® panels.

Table 6-7 of the SAR shows the different $^{10}B$ loadings and panel thicknesses for the five basket types. TS Table 6 contains the $^{10}B$ specification for the poison plates for the five basket types. Section 9.1.7 of the SAR describe the tests that are associated with the neutron absorber material. Important portions of these tests are captured in TS 4.3.1. Section 9.1.3 of this SER evaluates the neutron absorber tests and the TSs associated with these tests.

The 32PTH DSC may be loaded with four different soluble boron concentrations in the canister water: 2000, 2300, 2400, and 2500 ppm. A different maximum initial enrichment has been determined for each assembly type, basket type, and soluble boron loading.

The staff reviewed Sections 1, 2, and 6 of the SAR and verified that the design criteria and features important to criticality safety are clearly identified and adequately described. The staff also verified that the SAR contains engineering drawings, figures, and tables that are sufficiently detailed to support an in-depth staff evaluation.

Additionally, the staff verified that the design-basis off-normal and postulated accident events would not have an adverse effect on the design features important to criticality safety. Section 3 of the SAR shows that the basket will remain intact during all normal, off-normal, and accident conditions. Based on the information provided in the SAR, the staff concludes that the NUHOMS® HD System design with the 32PTH DSC meets the double contingency requirements of 10 CFR 72.124(a).

### 6.2 Fuel Specification

The NUHOMS® HD System 32PTH DSC is designed to store 32 PWR assemblies in each canister. The assembly types allowed are limited to the 14x14, 15x15, and 17x17 PWR fuel assemblies described in Table 6-3 of the SAR. All assemblies, except the CE 14x14, may contain burnable poison rod assemblies (BPRAs), thimble plug assemblies, and vibration suppressor inserts. Fuel assemblies with integral fuel burnable absorber (IFBA) may also be stored. The fuel specifications for the various types of assemblies are listed in Table 1 of the TS. Fuel dimensions and weights are listed in Table 2 of the TS. The fuel assemblies are described in detail in Table 6-4 of the SAR. The fuel specifications that are most important to criticality safety are:

- maximum initial enrichment
- number of fuel rods
- clad outer diameter
- minimum clad thickness
- fuel rod pitch
- number of guide tubes

The parameters listed above represent the limiting or bounding parameters for the fuel assemblies. In terms of criticality safety, the most important fuel specification is the fuel initial enrichment. The 32PTH DSC may contain 32 PWR assemblies with maximum initial enrichments up to 5.0 wt% $^{235}U$, depending on the DSC basket type, minimum soluble boron concentration in the canister water during loading, and the presence of damaged fuel in the DSC. The maximum initial enrichment for intact and damaged fuel loadings are given in Table 7 of the TS for all assembly types, and for different basket types and minimum soluble boron concentrations.

Specifications on the condition of the fuel are also included in the SAR and TS. The 32PTH DSC is designed to accommodate intact fuel assemblies or up to 16 damaged fuel assemblies, as defined in the TS. The damaged fuel must be placed in the inner 16 fuel assembly positions in the DSC, as shown in Figure 1 of the TS. Fuel assembly compartments containing damaged fuel must contain top and bottom end caps, in order to maintain the fuel in a known, subcritical geometry. Reconstituted fuel assemblies, where the fuel pins are replaced by stainless steel or Zircaloy pins that displace the same amount of borated water, may be stored as intact assemblies.

In Section 3 of the SAR, the applicant has shown that the undamaged fuel cladding will not fail during normal, off-normal, or accident conditions.

The staff verified that all fuel assembly parameters important to criticality safety have been included in the TS. The staff reviewed the fuel specifications considered in the criticality analysis and verified that they are consistent with the specifications given in Sections 1, 2, and 12 of the SAR and TS.

## 6.3 Model Specification

### 6.3.1 Configuration

The NUHOMS® HD System evaluated in this analysis consists of the 32PTH DSC, the OS187H transfer cask (TC), and the horizontal storage module (HSM-H). The applicant used 3–dimensional calculation models in its criticality analyses. The bounding model for each basket type, soluble boron loading, assembly type, and enrichment is based on a 32PTH DSC in the TC, with optimum moderator density. Figures containing the details of the criticality models are provided in Figures 6-1 through 6-19 of the SAR. The models were based on the engineering drawings in Section 1 of the SAR and consider the worst-case dimensional tolerance values. The design-basis off-normal events do not affect the criticality safety design features of the cask system. The neutron shield of the TC was not included in the criticality model; however, unborated water was placed between the casks in an infinite array, as well as in the DSC to TC wall gap. Failure of the damaged fuel assemblies within the fuel compartments and top and bottom end caps was also considered.

The normal condition model combined the most reactive basket dimensions. The applicant performed a series of criticality analyses to determine the most reactive fuel spacing and basket dimension conditions. These analyses were performed with the WE 17x17 Standard assembly, modeled in the 32PTH DSC over a 15.03-inch axial section, including the 13.25-inch neutron

absorber plate section and one of the two 1.75-inch sections of perpendicular steel straps. This model included periodic boundary conditions, effectively representing an infinite axial canister.

The calculation models also conservatively assumed the following:

1. fresh fuel isotopics (i.e., no burnup credit),
2. no burnable poisons present in the fuel,
3. pellet density of 97.5 % theoretical density with no dishing or chamfer,
4. maximum fuel enrichment modeled uniformly throughout the assembly (i.e., no axial or radial enrichment zones or natural uranium blankets),
5. omission of spacer grids, spacers, and hardware in the fuel assembly,
6. 75% credit for the $^{10}B$ content in the Boral® panels,
7. 90% credit for the $^{10}B$ content in the borated aluminum and aluminum-$B_4C$ metal matrix composite,
8. flooding of the fuel rod gap regions with full density water, and
9. infinite radial array of casks with interstitial water.

The applicant determined that the most reactive configuration was with the fuel assemblies shifted inward, with the minimum fuel compartment size, nominal fuel compartment wall thickness, homogeneous rail material consideration, and nominal poison plate thickness. The resulting most reactive configuration determined from these parametric studies was used as the baseline for all other criticality calculations.

For the determination of maximum initial enrichment for intact assemblies, the applicant considered various levels of internal moderation by borated water, for each assembly type, basket type, and soluble boron loading. Preferential flooding of regions within the canister is not considered in the criticality analysis due to the slots which are provided at the bottom of the guide tubes and drainage holes in the damaged fuel end caps to ensure uniform draining and filling of all areas of the canister.

For determination of maximum initial enrichment for damaged fuel assemblies, the applicant considered single and double ended shearing of one assembly face, allowing for the repositioning of rods and rod fragments. For the single ended shear analysis, the single row of rods was allowed to separate from the assembly and move towards the side of the fuel compartment. For the double ended shear analysis, the rods from one assembly face were split into two pieces, which were then considered to move to a different plane of the assembly, resulting in an added row of rods at one elevation and a removed row of rods at another elevation. The applicant also considered different pitches for damaged assemblies, varying from nominal to the maximum constrained by the dimensions of the fuel compartment. The possibility of assemblies shifting above the neutron absorber panels was addressed by modeling a 4-inch shift of the fuel assembly above the panels, which is conservative given the actual 2.5-inch distance between the top of the basket and the canister lid.

The staff reviewed the applicant's criticality models for the NUHOMS® HD System and agrees that they are consistent with the description of the cask and contents given in Sections 1 and 2 of the SAR, including the engineering drawings. Based on the information presented, the staff has reasonable assurance that the most reactive combination of cask parameters and dimensional tolerances were incorporated into the calculation models, or are bounded by the assumptions used in these models.

For its confirmatory analyses, the staff independently modeled the cask system using the engineering drawings and bills of materials presented in Section 1.5 of the SAR. Models of the cask system and its contents created by the staff were similar to those presented by the applicant.

### 6.3.2 Material Properties

The compositions and densities for the materials used in the criticality safety analysis computer models are provided in Table 6-9 of the NUHOMS® HD SAR. The applicant's models considered 75% of the specified $^{10}B$ areal density of the Boral® panels, in order to bound the effects of neutron channeling between $B_4C$ particles in the neutron absorber plates. The applicant also considered 90% of the specified $^{10}B$ areal density of the borated aluminum and aluminum-$B_4C$ metal matrix composite panels. Section 9.1.7 of the SAR gives the acceptance tests for the neutron absorber plates.

The staff reviewed the composition and number densities presented in the SAR and found them to be reasonable. The staff notes that these materials are not unique and are commonly used in other spent fuel storage and transportation applications.

## 6.4 Criticality Analysis

### 6.4.1 Computer Programs

The applicant performed the criticality analyses for the NUHOMS® HD System using the CSAS25 module of the SCALE 4.4 code package 3 (Reference 4), with KENO V.a and the 44-group ENDF/B-V cross-section library. KENO V.a is a three-dimensional Monte Carlo multi-group neutron transport code used by the SCALE system to calculate $k_{eff}$. This code is a standard in the nuclear industry for performing criticality analyses.

The staff agrees that the code and cross-section set used by the applicant are appropriate for this particular application and fuel system. The staff performed its independent criticality analyses using the CSAS25 sequence of SCALE 5, along with the SCALE system's 44-group cross-section library.

### 6.4.2 Multiplication Factor

The applicant's criticality analyses show that the $k_{eff}$ in the NUHOMS® HD System will not exceed 0.95 for all fuel loadings and conditions. Results of the applicant's SCALE 4.4 criticality calculations for all assembly types, basket types, and soluble boron loadings are given in SAR Table 6-15 through 6-18 and in 6-33 for intact fuel assemblies, and in Tables 6-26, 6-27, and 6-34 for damaged fuel assemblies. Tables 6-28 and 6-29 show the maximum $k_{eff} + 2\sigma$ calculated for each type of intact and damaged fuel assembly, respectively. All resulting values for $k_{eff} + 2\sigma$ are shown to be less than the SCALE 4.4 minimum calculated upper subcritical limit (USL) of 0.9419. The staff reviewed the applicant's calculated $k_{eff}$ values and agrees that they have been appropriately adjusted to include all biases and uncertainties at a 95% confidence level or better.

The staff performed independent SCALE 5 criticality calculations for PWR fuel assemblies under full and partial flooding conditions with borated water. The staff approximated the NUHOMS® HD System by modeling an axially periodic slice of the cask containing the neutron absorber panels and structural steel straps. This model created an infinite height cask, effectively eliminating axial leakage of neutrons. The staff modeled mechanical perturbations, geometric tolerances, and fuel assembly lattice dimension variations consistent with the applicant's analysis, and considered varying moderator densities. Results of the staff's calculations were in close agreement with the applicant's $k_{eff}$ results for the selected assembly types.

Based on the applicant's criticality evaluation, as confirmed by the staff's calculations, the staff concludes that the NUHOMS® HD System will remain subcritical, with an adequate safety margin, under all credible normal, off-normal, and accident conditions.

### 6.4.3 Benchmark Comparisons

The applicant performed benchmark calculations on critical experiments selected, as much as possible, to bound the range of variables in the NUHOMS® HD System design. The parameters in the 121 benchmark experiments selected bounded the parameters in the analysis with respect to fuel enrichment, fuel pin pitch, $^{10}B$ concentration in the moderator, water to fuel volume ratio, assembly separation, and average energy group causing fission. USL Method 1: Confidence Band with Administrative Margin, from NUREG/CR-6361, "Criticality Benchmark Guide for Light-Water-Reactor Fuel in Transportation and Storage Packages," (Reference 5) was used to determine the USL. The applicant stated that the benchmark calculations were performed with the same cross section library, fuel materials, and similar material and geometry modeling options as were used in the criticality calculations for the NUHOMS® HD System.

The USL resulting from the applicant's benchmark analysis is 0.9419. This USL incorporates the biases and uncertainties of the model and computer code into a value that has a 95% confidence level such that any $k_{eff}$ less than the USL is less than 0.95, which is the design criterion.

The staff reviewed the benchmark comparisons in the SAR and agrees that the computer code used for the analysis was adequately benchmarked using representative critical experiments. The staff also reviewed the applicant's method for determining the USL and found it to be acceptable and conservative. Additionally, the staff verified that only biases that increase $k_{eff}$ have been applied.

## 6.5 Supplemental Information

All supportive information has been provided in the SAR, primarily in Sections 1,2,6, and 12.

## 6.6 Evaluation Findings

Based on the information provided in the SAR and verified by the staff's own confirmatory analyses, the staff concludes that the NUHOMS® HD system meets the acceptance criteria specified in NUREG-1536. In addition, the staff finds the following:

F6.1 SSCs important to criticality safety are described in sufficient detail in Sections 1,2, and 6 of the SAR to enable an evaluation of their effectiveness.

F6.2 The NUHOMS® HD system is designed to be subcritical under all credible conditions.

F6.3 The criticality design is based on favorable geometry and fixed neutron poisons. An appraisal of the fixed neutron poisons has shown that they will remain effective for the 20-year storage period. In addition, there is no credible way to lose the fixed neutron poisons; therefore, there is no need to provide a positive means to verify their continued efficacy during the storage period.

F6.4 The analysis and evaluation of the criticality design and performance have demonstrated that the cask will enable the storage of spent fuel for 20 years with an adequate margin of safety.

F6.5 The staff concludes that the criticality design features for the NUHOMS® HD system are in compliance with 10 CFR Part 72 and that the applicable design and acceptance criteria have been satisfied. The evaluation of the criticality design provides reasonable assurance that the NUHOMS® HD system will allow safe storage of spent fuel. In reaching this conclusion, the staff has considered the regulation itself, appropriate regulatory guides, applicable codes and standards, and accepted engineering practices.

## 6.7 References


1. U.S. Code of Federal Regulations, “Licensing Requirements for the Independent Storage of Spent Nuclear Fuel, High-Level Radioactive Waste, and Reactor - Related Greater than Class C Waste,” Title 10, Part 72.

2. U.S. Nuclear Regulatory Commission, “Standard Review Plan for Dry Cask Storage Systems,” NUREG-1536, January 1997.

3. U.S. Nuclear Regulatory Commission, “Interim Staff Guidance - 8, Revision 2: Limited Burnup Credit in the Criticality Safety Analyses of PWR Spent Fuel in Transport and Storage Casks,” ISG-8 Rev. 2, September, 2002.

4. SCALE, “A Modular Code System for Performing Standardized Computer Analyses for Licensing Evaluation,” Oak Ridge National Laboratory, March 1997.

5. U.S. Nuclear Regulatory Commission, “Criticality Benchmark Guide for Light-Water-Reactor Fuel in Transportation and Storage Packages,” NUREG/CR-6361, March 1997.

## 7.0 CONFINEMENT EVALUATION

The staff reviewed the NUHOMS® HD 32PTH-DSC System confinement features and capabilities to ensure a) that any radiological releases to the environment will be within the limits established in 10 CFR Part 72 (Reference 1), and b) that the spent fuel cladding will be protected against degradation that might lead to gross ruptures during storage, as required in 10 CFR 72.122(h)(1). This application was also reviewed to determine whether the NUHOMS® HD 32PTH DSC System fulfills the acceptance criteria listed in Section 7 of NUREG-1536, "Standard Review Plan for Dry Cask Storage Systems," (Reference 2) and applicable Interim Staff Guidance documents (ISGs) (Reference 3). The staff's conclusions are based on information provided in the NUHOMS® HD 32PTH DSC System Safety Analysis Report (SAR).

### 7.1 Confinement Design Characteristics

The confinement boundary of the NUHOMS® HD 32PTH-DSC is described as follows: the cylindrical shell, the inner top cover/shield plug,[1] the vent and siphon plates, the shell bottom, and the associated welds. An outer top cover plate, which rests atop the inner top cover/shield plug and is welded to the cylindrical shell, provides a redundant confinement boundary as required by 10 CFR 72.236(e). The outer top cover plate weld to the DSC shell is a structural weld. All penetrations in the DSC confinement boundary are welded shut.

Figure 7-1 of the SAR depicts the confinement boundaries and welds, and describes the non-destructive examination requirements for the confinement boundary welds. SAR Chapters 8 and 9 also discuss the confinement boundary welds and the leak testing performed to verify their integrity. Additionally, the administrative controls in the TSs address leak-testing requirements.

The fabrication welds of the DSC that are part of the confinement boundary include the multiple-layer weld applied to the shell bottom and the full-penetration welds applied to the cylindrical shell. These welds are inspected via radiographic or ultrasonic means, in accordance with Subsection NB of the ASME Code. The remaining welds are applied using a multi-layer technique during DSC closure operations in accordance with NRC staff guidance and ASME Code. All confinement boundary welds are leak tested to show that the leakage rate is less than or equal to $1\times10^{-7}$ ref·cm$^3$/s, which meets the leaktight criteria in ANSI N14.5-1997.

### 7.2 Confinement Monitoring Capability

Periodic surveillance of the storage module for blockage of inlet and outlet vents, as well as the licensee's use of radiation monitors are adequate to ensure the continued effectiveness of the confinement boundary during storage. Because the DSC is welded shut, the staff finds that the periodic surveillance adequately enables the licensee to detect any closure degradation and to take appropriate corrective actions to maintain safe storage conditions.

---

[1]The three configurations, including option 2 and option 3 designs, of the inner top cover/shield plug are shown in detail in SAR drawing 10494-72-4, sheet 1 of 2, revision 1. The option 2 design of the inner top cover/shield plug consists of a siphon/vent block, an alignment pin block, a top casing plate, a lifting post, and a side casing plate; all of which are part of the confinement boundary, except for the side casing plate. The option 3 design of the inner top cover/shield plug consists of top shield plug inner and outer plates, of which only the top shield plug outer plate is part of the confinement boundary.

## 7.3 Nuclides with Potential Release

The DSC is fully welded, and the confinement boundary welds are leak tested, in accordance with ANSI N14.5-1997, to demonstrate that the DSC is leaktight to $1\times10^{-7}$ ref·cm$^3$/s. Additionally, a dry, inert atmosphere (helium) is maintained inside the DSC throughout the duration of storage to prevent oxidation of the fuel. The analyses presented in SAR Chapters 3 and 7 demonstrate that the confinement boundary is not compromised during normal, off-normal, and accident storage conditions. Hence, there is no contribution to the radiological consequences due to a potential release of canister contents.

## 7.4 Confinement Analysis

TN has demonstrated that the welds and applicable non-destructive examinations meet the applicable storage requirements demonstrating DSC integrity as set forth in ISG-5 and ISG-15, as follows:

1. The DSC is fabricated with austenitic stainless steel;

2. The DSC closure welds meet the requirements of ISG-15, Section X.5.2.3 “Weld Design and Specifications,” or an approved alternative;

3. The DSC maintains its integrity during normal operating conditions, anticipated off-normal conditions, and credible accidents and natural phenomena, as required by 10 CFR Part 72;

4. Records documenting the fabrication and closure welding of DSCs meet the requirements of 10 CFR 72.174, “Quality Assurance Records,” ANSI N45.2.9, “Requirements for Collection, Storage, and Maintenance of Quality Assurance Records for Nuclear Power Plants;” and,

5. Activities related to inspection, documentation, and welding of DSCs are performed in accordance with an NRC-approved quality assurance program as required in 10 CFR Part 72, Subpart G, “Quality Assurance.”

Additionally, all confinement boundary welds are leak tested to demonstrate that the confinement boundary is leaktight, as defined by ANSI N14.5-1997, to $1\times10^{-7}$ ref·cm$^3$/s.

The confinement boundary is shown to maintain confinement during all normal, off-normal, and storage accident (including natural phenomena) conditions. Also, the temperature and pressure of the canister are within design-basis limits. Therefore, no discernable leakage under storage conditions is credible.

## 7.5 Supportive Information

Supportive information or documentation includes drawings of the NUHOMS® HD 32PTH-DSC System confinement boundary and applicable pages from referenced documents.

## 7.6 Evaluation Findings

F7.1 Sections 1, 2, and 7 of the SAR describe confinement structures, systems, and components (SSCs) important to safety in sufficient detail to permit evaluation of their effectiveness.

F7.2 The design of the DSC adequately protects the spent fuel cladding during storage against degradation that might otherwise lead to gross ruptures. Chapter 4 of the safety evaluation report (SER) discusses the relevant temperature considerations.

F7.3 The design of the DSC provides redundant sealing of the confinement system closure joints using multiple welds: the inner welds, consisting of the weld joining inner top cover/shield plug (including option 2 or option 3) to the DSC shell along with the vent and siphon port covers and welds; and the outer, structural weld joining the top cover plate to the DSC shell.

F7.4 The DSC has no bolted closures or mechanical seals. The confinement boundary contains no external penetrations for pressure monitoring or overpressure protection. No instrumentation is required to remain operational under accident conditions of storage. Because the DSC uses an entirely welded, redundant closure system, no direct monitoring of the closure is required.

F7.5 The TSs and sections 7, 8, 9 of the SAR describe the leakage tests performed to verify that the confinement boundary is leaktight, as defined by ANSI N14.5-1997.

F7.6 The confinement system will reasonably maintain confinement of radioactive material during storage. Chapter 10 of the SER shows that the direct dose under storage conditions from the DSC satisfies the regulatory requirements of 10 CFR 72.104(a) and 10 CFR 72.106(b).

F7.7 The staff concludes that the design of the confinement system of the DSC is in compliance with the requirements in 10 CFR Part 72 and that the applicable design and acceptance criteria have been satisfied. The evaluation of the confinement system design provides reasonable assurance that the DSC will allow safe storage of spent fuel. This finding is reached on the basis of a review that considered the regulation itself, appropriate regulatory guides, applicable codes and standards, the applicant's analysis and the staff's confirmatory analysis, and accepted engineering practices.

## 7.7 References

1. American National Standards Institute, Institute for Nuclear Materials Management, "American National Standard for Radioactive Materials - Leakage Tests on Packages for Shipment," ANSI N14.5, 1997.

2. U.S. Code of Federal Regulations, "Licensing Requirements for the Independent Storage of Spent Nuclear Fuel, High-Level Radioactive Waste, and Reactor - Related Greater than Class C Waste," Title 10, Part 72.

3. U.S. Nuclear Regulatory Commission, “Standard Review Plan for Dry Cask Storage Systems,” NUREG-1536, January 1997.

4. U.S. Nuclear Regulatory Commission, Spent Fuel Project Office, Interim Staff Guidance-5, Revision 1, “Confinement Evaluation.”

5. U.S. Nuclear Regulatory Commission, Spent Fuel Project Office, Interim Staff Guidance-15, “Materials Evaluation.”

## 8.0 OPERATING PROCEDURES EVALUATION

The purpose of the review of the technical bases for the operating procedures is to ensure that the applicant's SAR presents acceptable operating sequences, guidance, and generic procedures for key operations such as cask loading, cask handling and storage operations, and cask unloading.

### 8.1 Cask Loading

Detailed loading procedures must be developed by each user.

The loading procedures described in the SAR include appropriate preparation and inspection provisions to be accomplished before cask loading. These include cleaning and decontaminating the transfer cask and other equipment as necessary, and performing an inspection of the NUHOMS® HD System DSC for any physical damage and cleanliness.

#### 8.1.1 Fuel Specifications

The procedures described in Section 8 of the SAR discuss verification by plant record or other means that the candidate fuel assemblies meet the physical, thermal and radiological criteria specified in the TSs. Section 8 of the SAR provides for verification that the boron content of the water in the DSC meets TSs and that the fuel identification for the fuel assemblies that are loaded into the DSC basket compartment are verified and documented.

#### 8.1.2 ALARA

The procedures descriptions in Section 8 of the SAR incorporate ALARA principles and practices. These include exposure and contamination controls, and the use of temporary shielding. Further evaluation of ALARA is found in Section 10 of the SER.

#### 8.1.3 Draining, Drying, Filling and Pressurization

Section 8 of the SAR clearly describes draining, drying, filling and pressurization procedures for the NUHOMS® 32PTH DSC that will provide reasonable assurance that an acceptable level of moisture remains in the cask and the fuel is stored in an inert atmosphere.

Section 8 of the SAR discusses the draining of water from the NUHOMS® 32PTH DSC prior to welding of the inner top cover/shield plug. Nitrogen or helium will be used to assist the removal of water from the NUHOMS® 32PTH DSC. It should be noted that if the gaseous atmosphere is oxidizing, oxidation of fuel pellets or fuel fragments can occur if a cladding breach (such as a pinhole) already exists. Oxidation may occur very rapidly and cause significant swelling of fuel pellets and fragments, which could result in gross fuel cladding breaches. Therefore, it is important to use an inert gas, when assisting the removal of water, to prevent loss of retrievability or an inadequately analyzed configuration from a shielding and criticality perspective. The staff reviewed the procedures in SAR Section 8.1.1.3, and find these procedures acceptable for this application.

### 8.1.4 Welding and Sealing

Welding and sealing operations of the NUHOMS® HD DSCs are similar to that previously approved by the staff for other DSCs used with the Standardized NUHOMS System. The procedures include monitoring for hydrogen during welding operations.

## 8.2 Cask Handling and Storage Operations

All handling and transportation events applicable to moving the NUHOMS® 32PTH DSC to the storage location are similar to those previously reviewed by the staff for the Standardized NUHOMS® System and are bounded by Section 11 of the SAR. Monitoring operations include daily surveillances of the HSM air inlets and outlets in accordance with TS requirements.

Occupational and public exposure estimates are evaluated in Section 10 of the SAR. Each cask user will need to develop detailed cask handling and storage procedures that incorporate ALARA objectives of their site-specific radiation protection program in accordance with TS 5.2.4.

## 8.3 Cask Unloading

Detailed unloading procedures must be developed by each user.

Section 8 of the SAR provides unloading procedures similar to those previously approved by the staff for use with the Standardized NUHOMS® System. The procedures provide for a verification that the boron content for the fill water for the DSC conforms to the TSs. The procedure also monitors for hydrogen during cutting operations.

Section 8 of the SAR includes steps to obtain a sample of the DSC atmosphere and to check for presence of fission gas indicative of degraded fuel. If degraded fuel is suspected, additional measures appropriate for the specific conditions are to be planned, reviewed, and implemented by the user of the cask to minimize exposures to workers and radiological releases to the environment.

## 8.4 Evaluation Findings

F8.1 The NUHOMS® HD System is compatible with wet loading and unloading. General procedure descriptions for these operations are summarized in Section 8 of the applicant's SAR. Detailed procedures will need to be developed and evaluated on a site-specific basis.

F8.2 The welded cover plates of the 32PTH DSC allow ready retrieval of the spent fuel for further processing or disposal as required.

F8.3 The NUHOMS® 32PTH DSC geometry and general operating procedures facilitate decontamination. Only routine decontamination will be necessary after the cask is removed from the spent fuel pool.

F8.4 No significant radioactive waste is generated during operations associated with the independent spent fuel storage installation. Contaminated water from the spent fuel pool will be governed by the 10 CFR Part 50 license conditions.

.

F8.5 No significant radioactive effluents are produced during storage. Any radioactive effluents generated during the cask loading will be governed by the 10 CFR Part 50 license conditions.

F8.6 The technical bases for the general operating procedures described in the SAR are adequate to protect health and minimize danger to life and property. Detailed procedures will need to be developed and evaluated on a site-specific basis.

F8.7 Section 10 of the SER assesses the operational restrictions to meet the limits of 10 CFR Part 20. Additional site-specific restrictions may also be established by the site licensee.

F8.8 The staff concludes that the generic procedures and guidance for the operation of the NUHOMS® HD System are in compliance with 10 CFR Part 72 and that the applicable acceptance criteria have been satisfied. The evaluation of the operating procedure descriptions provided in the SAR offers reasonable assurance that the cask will enable safe storage of spent fuel. This finding is based on a review that considered the regulations, appropriate regulatory guides, applicable codes and standards, and accepted practices.

## 9.0 ACCEPTANCE TEST AND MAINTENANCE PROGRAMS

### 9.1 Acceptance Tests

All materials and components will be procured with certification and supporting documentation to assure compliance with procurement specifications and receipt inspected for visual and dimensional traceability.

#### 9.1.1 Visual and Nondestructive Examination Inspections

The DSC confinement boundary is fabricated and inspected in accordance with ASME Code Section III, Subsection NB. Alternatives to the ASME Code are identified in Section 12 of the SAR. The staff reviewed these alternatives, and the corresponding justifications, and found them to be acceptable.

The nondestructive examination (NDE) of weldments is well characterized in the license drawings and discussed in the SAR. Standard NDE symbols and/or notations are used in accordance with AWS 2.4, "Standard Symbols for Welding, Brazing, and Nondestructive Examination." Fabrication inspection include visual (VT), liquid penetrant (PT), and ultrasonic, (UT) examinations, as applicable.

The applicant has also committed to performing visual examination on the absorber materials for evidence of defects such as cracks, porosity, blisters, or foreign inclusions.

#### 9.1.2 Leakage Testing

The NUHOMS - 32PTH DSC is designed to be leaktight and is tested, as defined in "American National Standard for Leakage Tests on Packages for Shipment of Radioactive Materials," ANSI N14.5-1997 (Reference 1), to demonstrate that the leakage rate is less than or equal to $1\times10^{-7}$ ref·cm$^3$/s. As stated in TS 5.2.4(c), following completion of the welding of the 32PTH inner top cover/shield plug and the siphon and vent cover plates, these welds are leak tested in accordance with ANSI N14.5-1997 to the leaktight criterion. The staff finds this leaktight testing and the TS commitment to perform this testing acceptable.

#### 9.1.3 Neutron Absorber Tests

There are three types of neutron absorbers (also called poisons) used in the NUHOMS HD DSC basket. They are BORAL® , boron carbide-aluminum metal matrix composite, (i.e., Metamic) and borated aluminum alloy.

**Acceptance Tests**

Acceptance tests are conducted on production material to determine if selected specified characteristics have been satisfied, such that the lot can be accepted for use. The neutron absorbers minimum total $^{10}$B areal density are specified in Table 9-1 of the SAR and TS Table 6. The acceptance program that the applicant will conduct supports crediting 75% in the criticality analysis and ensuring the presence of the $^{10}$B content specified for fabrication of the BORAL® plates. Likewise, the acceptance program supports crediting 90% in the criticality analysis and

ensuring the presence of the $^{10}B$ content specified for fabrication of the borated aluminum and the boron carbide metal matrix composite plates. The important portions of the neutron absorber tests are captured in TSs. Specifically, TS 4.3.1, "Neutron Absorber Tests," incorporates by reference into the TSs SAR sections 9.1.7.1, 9.1.7.2, 9.1.7.3, 9.5.2, 9.5.3.5, and 9.5.4.3. Therefore, prior NRC approval is required before any changes can be made to these sections of the SAR. The staff finds the acceptance tests for the neutron absorber material acceptable for this application. In addition, the staff finds the TS for $^{10}B$ areal density contained in Table 6 of the TSs and the neutron absorber material acceptance tests contained in TS 4.3.1 to be acceptable for this application.

**Qualification Tests**

Qualification tests are used to demonstrate suitability and durability for a specific application. The applicant presented specifications that will be used to qualify a new borated material or changes to an existing borated material. The staff reviewed the design requirements, tests for durability (e.g., corrosion and thermal damage), and testing to demonstrate the $^{10}B$ uniformity. Important portions of these qualification tests are captured in TS 4.3.1, "Neutron Absorber Tests," mentioned above. The staff finds the qualification tests for the neutron absorber material acceptable for this application. In addition, the staff finds the qualification tests contained in TS 4.3.1 to be acceptable.

## 9.2 Evaluation Findings

F9.1 Sections 9.1.7 of the SAR describes the applicants proposed program for pre-operational testing and initial operations of the neutron absorber in the DSC.

F9.2 SSCs important to safety will be designed, fabricated, erected, tested, and maintained to quality standards commensurate with the importance to safety of the function they are intended to perform. Section 2, Tables 2-5 of the SAR identify the safety importance of SSCs and Section 3 of the SAR presents the applicable standards for their design, fabrication, and testing.

F9.3 The applicant will examine and/or test the DSC to ensure that it does not exhibit any defects that could significantly reduce its confinement effectiveness. Sections 9.1.2 and 9.1.3 of the SAR describes this inspection and testing.

F9.4 The 32PTH DSC will be marked with a data plate indicating its model number, unique identification number, and empty weight. Drawing 10494-72-7 in SAR section 1.2.2 illustrates and describes this data plate.

F9.5 The staff concludes that the acceptance tests and maintenance program for the NUHOMS HD DSC are in compliance with 10 CFR Part 72 and that the applicable acceptance criteria have been satisfied. The evaluation of the acceptance tests and maintenance program provides reasonable assurance that the cask will allow safe storage of spent fuel throughout its licensed or certified term. This finding is reached on the basis of a review that considered the regulation itself, appropriate regulatory guides, applicable codes and standards, and accepted practices.

## 9.3 References

1. ANSI N14.5-1997, “American National Standard for Leakage Tests on Packages for Shipment of Radioactive Materials.”

## 10.0 RADIATION PROTECTION EVALUATION

The staff reviewed the radiation protection design features, design criteria, and the operating procedures for the NUHOMS® HD System to ensure that its use will meet the regulatory dose requirements of 10 CFR Part 20, 10 CFR 72.104(a), and 10 CFR 72.106(b) (Reference 1). The application was also reviewed to determine whether the NUHOMS® HD System fulfills the acceptance criteria listed in Section 10 of NUREG-1536, "Standard Review Plan for Dry Cask Storage Systems" (Reference 2).

### 10.1 Radiation Protection Design Criteria and Design Features

#### 10.1.1 Design Criteria

The radiological protection design criteria are the limits and requirements of 10 CFR Part 20, and 10 CFR Part 72. The TSs also establish an administrative program which controls the dose limits for the HSM-H that are based on the calculated dose rate values used to determine occupational and off-site exposures. The TSs also establish exterior contamination limits for the DSC to keep contamination levels below 2,200 dpm/100 $cm^2$ for beta and gamma radiation, and 220 dpm/100 $cm^2$ for alpha radiation.

#### 10.1.2 Design Features

Sections 5 and 10 of the SAR define the radiological protection design features which provide radiation protection to operational personnel and members of the public. The radiation protection design features include the following:

- thick-walled concrete HSM-H that provides radiation shielding,
- design of the HSM-H air inlets paths which includes sharp bends to minimize radiation streaming,
- a recess in the HSM-H access opening to dock and secure the transfer cask during DSC transfer to reduce occupational exposure,
- thick canister shield plug on both ends of the canister and transfer cask that provide occupational shielding during loading/unloading and transfer operations,
- confinement system that consists of multiple welded barriers to prevent atmospheric release of radionuclides and is designed to maintain confinement of fuel during accident conditions,
- system design allows for water in the DSC/transfer cask annulus which is then sealed which reduces occupational dose rates and minimizes contamination of the DSC exterior,
- use of water in the DSC cavity (when possible) to reduce occupational dose rates,
- a low-maintenance design that reduces occupational exposures during ISFSI operation, and

- implementation of ALARA principles into the cask design and operating procedures that reduce occupational exposures.

The design features that address process instrumentation and controls, control of airborne contaminants, decontamination, radiation monitoring, auxiliary shielding devices and other ALARA considerations are similar to the Standardized NUHOMS® System. The staff evaluated the radiation protection design features and design criteria for the NUHOMS® HD System and found them acceptable. The SAR analysis provides reasonable assurance that use of the NUHOMS® HD System can meet the regulatory requirements in 10 CFR Part 20 and 10 CFR Part 72. Sections 5, 7, and 8 of the SER discuss the staff's evaluations of the shielding features, confinement systems, and operating procedures, respectively. Section 11 of the SER discusses staff evaluations of the capability of the shielding and confinement features during off-normal and accident conditions.

## 10.2 Occupational Exposures

Section 8 of the application discusses the generic operating procedures that general licensees will use for fuel loading, DSC cask operations (such as welding and decontamination), transferring the DSC into the HSM-H, and fuel unloading. Table 10-1 of the SAR provides the estimated number of personnel, time, tasks involved and the estimated dose to load a canister. The estimated occupational doses are based on actual Standardized NUHOMS® System operating experience. The dose estimates indicate that the total occupational dose in loading a single canister with design basis fuel into the HSM-H is approximately 2.2 person-rem. The applicant expects this dose to be bounding for the NUHOMS® HD System based on the measured occupational doses for the Standardized NUHOMS® System have been less than 600 mrem per loaded canister.

## 10.3 Public Exposures From Normal and Off-Normal Conditions

Section 10.2 of the SAR presents the calculated direct radiation dose rates at distances beyond 100 meters from a sample cask array configuration loaded with design basis fuel. Table 10-2 and figure 10-1 provide the estimated dose as a function of distance for two 1x10 arrays of storage modules (front-to-front) and a 2x10 array of storage modules (back-to-back). The table shows that the regulatory design limit of 25 mrem/yr can be achieved at distances less than 300 meters. This assumes 100 percent occupancy for 365 days.

The staff evaluated the public dose estimates during normal and off-normal conditions and found them acceptable. The primary dose pathway to individuals beyond the controlled area during normal and off-normal conditions is from direct radiation (including skyshine). The canister is leaktight and the confinement function is not affected by normal or off-normal conditions therefore, no discernable leakage is credible. A discussion of the staff's evaluation and confirmatory analysis of the shielding calculations is presented in Section 5 of this SER.

The staff has reasonable assurance that compliance with 10 CFR 72.104(a) can be achieved by each general licensee. The general licensee using the NUHOMS® HD System must perform a site-specific evaluation, as required by 10 CFR 72.212(b) to demonstrate compliance with 10 CFR 72.104(a). The actual doses to individuals beyond the controlled area boundary depend on several site-specific conditions such as fuel characteristics, cask-array configurations,

topography, demographics, and use of engineered features (e.g., berm). In addition, the dose limits in 10 CFR 72.104(a) include doses from other fuel cycle activities such as reactor operations. Consequently, final determination of compliance with 10 CFR 72.104(a) is the responsibility of each applicant for a site license.

The general licensee will also have an established radiation protection program as required by 10 CFR Part 20, Subpart B, and will demonstrate compliance with dose limits to individual members of the public, as required in 10 CFR Part 20, Subpart D by evaluations and measurements.

### 10.4 Public Exposures From Design-Basis Accidents and Natural Phenomena Events

Section 5 of the SAR summarizes the calculated dose rates to individuals beyond the controlled area for the accident conditions listed in Section 11 of the SAR. The confinement function of the canister is not affected by design-basis accidents or natural phenomena events thus there is no release of contents.

The SAR analysis indicates the worst case shielding consequences results in a dose at the controlled area boundary that meets the regulatory requirements of 10 CFR 72.106(b). Section 11 of the SAR discusses corrective actions for each design-basis accident. The staff evaluated the public dose estimates from direct radiation under accident conditions and natural phenomena events and found them acceptable. A discussion of the staff's evaluation and any confirmatory analysis of the shielding and confinement analysis is presented in Sections 5 and 7 of this SER. A discussion of the staff's evaluation of the accident conditions and recovery actions are presented in Section 11 of the SER. The staff has reasonable assurance that the effects of direct radiation from bounding design basis accidents and natural phenomena will be below the regulatory limits in 10 CFR 72.106(b).

### 10.5 ALARA

Sections 5, 7, and 10 of the SAR present evidence that the NUHOMS® HD System radiation protection design features and design criteria address ALARA requirements, consistent with 10 CFR Part 20 and Regulatory Guides 8.8 (Reference 3) and 8.10 (Reference 4). Each general licensee will apply its existing site-specific ALARA policies, procedures, and practices for cask operations to ensure that personnel exposure requirements in 10 CFR Part 20 are met. Each plant will have to consider the use of this canister with respect to their particular ALARA implementation philosophy.

The staff evaluated the ALARA assessment of the NUHOMS® HD System and found it acceptable. Section 8 of the SER discusses the staff's evaluation of the operating procedures with respect to ALARA principles and practices. Operational ALARA policies, procedures, and practices are the responsibility of the site licensee as required by 10 CFR Part 20. In addition, the TSs establish an administrative program which controls dose limits and surface contamination limits to ensure that occupational exposures are maintained ALARA.

## 10.6 Evaluation Findings

F10.1 The SAR sufficiently describes the radiation protection design bases and design criteria for the structures, systems, and components important to safety.

F10.2 The NUHOMS® HD storage cask system provides radiation shielding and confinement features that are sufficient to meet the requirements of 10 CFR 72.104, and 10 CFR 72.106.

F10.3 The occupational radiation exposures provided in the SAR satisfy the limits in 10 CFR Part 20 and meet the objective of maintaining exposures ALARA.

F10.4 The staff concludes that the design of the radiation protection system of the NUHOMS® HD System is in compliance with 10 CFR Part 72 and the applicable design and acceptance criteria have been satisfied. The evaluation of the radiation protection system design provides reasonable assurance that the NUHOMS® HD System will provide safe storage of spent fuel. This finding is based on a review that considered the regulation itself, the appropriate regulatory guides, applicable codes and standards, the applicant's analyses, the staff's confirmatory analyses, and acceptable engineering practices.

## 10.7 References


1. U.S. Code of Federal Regulations, "Licensing Requirements for the Independent Storage of Spent Nuclear Fuel, High-Level Radioactive Waste, and Reactor - Related Greater than Class C Waste," Title 10, Part 72.

2. U.S. Nuclear Regulatory Commission, "Standard Review Plan for Dry Cask Storage Systems," NUREG-1536, January 1997.

3. U.S. Nuclear Regulatory Commission, "Information Relevant to Ensuring that Occupational Radiation Exposures Will Be As Low As is Reasonably Achievable," Regulatory Guide 8.8, Revision 3, June 1978.

4. U.S. Nuclear Regulatory Commission, "Operating Philosophy for Maintaining Occupational Radiation Exposures As Low As is Reasonably Achievable," Regulatory Guide 8.10, Revision 1-R, May 1977.

## 11.0 ACCIDENT ANALYSIS

The purpose of the review of the accident analyses is to evaluate the applicant's identification and analysis of hazards, as well as the summary analysis of systems responses to both off-normal and accident or design-basis events. This ensures that the applicant has conducted thorough accident analyses as reflected by the following factors:

- identified all credible accidents
- provided complete information in the SAR
- analyzed the safety performance of the cask system in each review area
- fulfilled all applicable regulatory requirements

### 11.1 Off-Normal Conditions

Off-normal operations are Design Event II as defined by ANSI/ANS 57.9 (Reference 1). These events can be described as not occurring regularly, but can be expected to occur with moderate frequency (on the order of once per year). The NUHOMS® HD System off-normal events are described in Section 11.2 of the SAR. Two off-normal events are identified and analyzed for the NUHOMS® HD System that are defined as bounding the range of off-normal events. These are inadvertent jamming of the DSC while loading or unloading the HSM-H and extreme external ambient temperatures. These events have been analyzed and reported in the appropriate sections of this report such as Sections 3 and 4.

### 11.2 Accident Events and Conditions

Accident events and conditions are Design Event III and IV as defined in Reference 1. They include natural phenomena and human-induced low probability events. The applicant provided analyses to demonstrate design adequacy for the accident-level events discussed below. The NUHOMS® HD System is designed to accommodate postulated accidents that are described in Section 11 of the SAR. Seven postulated accident conditions are addressed in the section.

#### 11.2.1 Blockage of Air Inlet and Outlet Openings

The NUHOMS® HD System has been designed based on the postulation of the complete blockage of the HSM-H ventilation air inlet and outlet openings. The source of the blockage could be debris accumulation at the openings that was transported by events such as floods or tornadoes. The resulting thermal conditions are analyzed and discussed in Section 4 of this SER. The debris is assumed to remain in place for 34 hours. The thermal-induced stresses are considered in the loading combinations which are evaluated in Section 3 of this report.

There are no off-site dose consequences resulting from this accident scenario. The on-site dose received by workers from this accident is estimated at no more than one man-rem per 8 hour period during the removal of debris from the vents.

### 11.2.2 Accidental Drop of 32PTH DSC Inside the Transfer Cask

The design basis for an accidental drop of the 32PTH DSC is for the occurrence of an accidental drop of the transfer cask while an 32PTH DSC loaded with spent fuel is contained within the transfer cask. Handling operations involving hoisting and movement of the on-site transfer cask and the 32PTH DSC are typically performed inside the plant's fuel handling building. These include utilizing the crane for placement of the empty 32PTH DSC into the transfer cask cavity, lifting the transfer cask/32PTH DSC into and out of the plant's spent fuel pool, and placement of the transfer cask/32PTH DSC onto the transport skid/trailer. An analysis of the plant's lifting devices used for these operations, including the crane and lifting yoke, is needed to address a postulated drop accident for the transfer cask and its contents. This analysis is not evaluated in this SER. The postulated drop accident scenarios addressed in the plant's 10 CFR Part 50 licensing basis are plant specific and should be addressed by the licensee.

The transfer cask is transported to the ISFSI in a horizontal configuration. Therefore, the only credible drop accident during storage or transfer operation is a side drop. Nevertheless, the NUHOMS® HD System transfer cask and DSC are evaluated for a postulated end and corner drop to demonstrate structural integrity during transport and plant handling. However, the fuel cladding structural integrity has not been demonstrated for these scenarios.

As stated in Section 3.4.1.1 of this SER, the staff finds this approach (i.e., evaluating the basket, DSC, TC and fuel cladding for a side drop, and the basket, DSC and TC for an end and corner drop) meets the requirements of 10 CFR Part 72. However, for the end drop and corner drop scenario for the fuel cladding an additional safety review by the user of the casks is necessary to demonstrate fuel cladding integrity under 10 CFR Part 50 or to demonstrate that the drop accidents are not credible. In addition, the end drop and corner drop accident scenario may be credible during transport operations governed under 10 CFR Part 71. Therefore, if these casks will be used for transport operations governed under 10 CFR Part 71, the staff expects that the fuel cladding integrity will be addressed in the 10 CFR Part 71 application for the casks.

The accidental transfer cask drop scenarios do not breach the 32PTH DSC confinement boundaries. The function of the transfer cask lead shielding is not compromised by these drops. The transfer cask neutron shield, however, may be damaged in an accidental drop. The bounding accident condition for the transfer cask considers loss of water from the transfer cask water jacket during a cask drop. The doses resulting from this accident are evaluated in Section 5.4.5 of this report and found to be acceptable.

### 11.2.3 Fire/Explosion

The credible fire is considered to be small and of a short durations such as that due to a fire or explosion from a vehicle or portable crane. Direct engulfment of the HSM-H is considered to be highly unlikely and any fire within the ISFSI boundary while the DSC is in the HSM would be bounded by the fire during the transfer cask movement. The credible fire used as the design basis when the NUHOMS® HD System is being used in the transfer mode is the ignition of 300 gallons spilled onto the ground in such a way as to completely engulf the transfer cask. Subsequent to the fire accident, it is assumed that the seals for the transfer cask lid and the bottom cover plate will burn, and the liquid neutron shield will be released and evaporates

completely. The effects of the fire are discussed in Section 4.4 of the SAR and evaluated in Section 4.7 of this SER.

The 32PTH DSC will not be breached as a result of the postulated fire/explosion scenario. The fire condition may result in the loss of the transfer cask neutron shielding if the fire occurs when the 32PTH DSC is inside the transfer cask. The effect of this set of conditions is bounded by the results from the cask drop scenarios discussed in Section 11.2.2 herein.

### 11.2.4 Lightning

Lightning striking the HSM-H, which encapsulates and protects the 32PTH DSC, and causing an off-normal condition is not considered to be credible. A lightning strike in the vicinity of the HSM-H will follow a low impedance path offered by the surrounding environment, or by a lightning protection system if the site specific characteristics have resulted in the installation of such a system. The 32PTH DSC is protected by the concrete of the HSM-H and no mechanical or thermal damage is expected.

There are no dose consequences from such an accident as a lightning strike.

### 11.2.5 Flood

The HSM-H is evaluated for flooding in Appendix 3.9.9 of the SAR. A maximum water height of 50 feet and a maximum velocity of 15 feet per second is assumed in the analysis. Section 3.4 of this SER evaluates the ability of the HSM-H to withstand the effects of flooding combined with other design loadings.

The radiation dose due to flooding of the HSM-H is negligible since the 32PTH DSC maintains the confinement boundary.

### 11.2.6 Seismic Events

A seismic analysis was performed for the components that are important to safety including the basket, canister, transfer cask and HSM-H. The seismic design criteria is consistent with the criteria set forth in Regulatory Guide 1.60 (Reference 2) with the exception that the response spectra is anchored at maximum ground acceleration of 0.30g (instead of 0.25g) for the horizontal components and 0.20g (instead of 0.17g) for the vertical components. Section 3.4 of this SER evaluates the ability of the basket, canister, transfer cask and HSM-H to withstand the effects of a seismic event combined with other design loadings. Because these components are designed and analyzed to withstand the design basis earthquake accident no radiation is released and there is no associated dose increase due to this event.

### 11.2.7 Tornado Wind and Tornado Missiles

The NUHOMS® HD System is designed to be located anywhere within the continental United States of America and therefore was designed to meet the most severe tornado wind and tornado missile criteria for the accident conditions. The criteria are based on those specified in NUREG-0800 (Reference 3) and NRC Regulatory Guide 1.76 (Reference 4). The range of

tornado driven missiles included a utility pole, steel pipe, an armor piercing artillery shell and a 4000 pound automobile with a 20 square foot frontal area moving at 195 feet per second.

The tornado wind and missile effects on the HSM-H do not breach the confinement boundary. Localized scabbing of the end shield wall may be possible that would have a negligible effect on site boundary dose rates. The tornado wind and missile effects on the transfer cask do not breach the confinement boundary. The missile impact may result in the loss of cask neutron shielding and local deformation/damage of the gamma shielding. The effect of the loss of neutron shielding is bounded by that resulting for a cask drop scenario that is evaluated in Section 11.2.2 of this SER.

## 11.3 Evaluation of Findings

F11.1 Structures, systems, and components of the NUHOMS® HD System are adequate to prevent accidents and to mitigate the consequences of accidents and natural phenomena events that do occur.

F11.2 The spacing of casks is discussed in Sections 1.4 of the NUHOMS® HD System SAR. The staff has previously reviewed and approved the cask spacing to ensure accessibility of the equipment and services required for emergency response.

F11.3 The applicant has evaluated the NUHOMS® HD System to demonstrate that it will reasonably maintain confinement of radioactive material under credible accident conditions.

F11.4 An accident or natural phenomena event will not preclude the ready retrieval of spent fuel for further processing or disposal.

F11.5 The spent fuel will be maintained in a subcritical condition under accident conditions. Neither off-normal nor accident conditions will result in a dose, to an individual outside the controlled area, that exceeds the limits of 10 CFR 72.104(a) or 72.106(b), respectively.

F11.6 The staff concludes that the accident design criteria for the NUHOMS® HD System are in compliance with 10 CFR Part 72 and the accident design and acceptance criteria have been satisfied. The applicant's accident evaluation of the cask adequately demonstrates that it will provide for safe storage of spent fuel during credible accident situations. This finding is reached on the basis of a review that considered independent confirmatory calculations, the regulation itself, appropriate regulatory guides, applicable codes and standards, and accepted engineering practices.

## 11.4 References

1. American Nuclear Society, ANSI/ANS-57.9, “Design Criteria for an Independent Spent Fuel Storage Installation (Dry Storage Type),” 1992.

2. NRC Regulatory Guide 1.60, “Design Response Spectra for Seismic Design of Nuclear Power Plants,” Revision 1, 1973.

3. NRC NUREG-0800, “Standard Review Plan for the Review of Safety Analysis Reports for Nuclear Power Plants,” Revision 2, July 1981.

4. NRC Regulatory Guide 1.76, “Design Basis Tornado for Nuclear Power Plants, “ April 1974.

## 12.0 CONDITIONS FOR CASK USE - TECHNICAL SPECIFICATIONS

In this section the staff evaluated the operating controls and limits or the TS, including their bases and justification, that the applicant established as conditions of use for the NUHOMS® HD System.

For simplicity in defining the acceptance criteria and review procedures, the term technical specifications may be considered synonymous with operating controls and limits. The conditions for use and TS define the conditions that are deemed necessary for safe NUHOMS® HD System use. Specifically, they define operating limits and controls, monitoring instruments and control settings, surveillance requirements, design features, and administrative controls that ensure safe operation of the NUHOMS® HD System. As such, these conditions for use and TS are included in the certificate of compliance.

### 12.1 Conditions for Use

The conditions for use of the NUHOMS® HD System were developed by NRC staff in accordance with guidance provided in NUREG 1745, "Standard Format and Content for 10 CFR Part 72 Cask Certificates of Compliance." The conditions were derived from analysis and evaluations provided in the NUHOMS® HD System SAR and pertain to the design, construction and operation of the system.

### 12.2 Technical Specifications

Section 12 of the SAR describes the TS required to ensure that the NUHOMS® HD System is operated safely. The TS were established to implement requirements for the design, construction, and operation of the NUHOMS® HD System by a licensee using a general license in accordance with 10 CFR Part 72. The TS, as approved by the staff, are contained in an appendix to the Certificate of Compliance for the NUHOMS® HD System and address the following areas:

- Use and Application
- Approved Contents
- Limiting Conditions for Operation (including Surveillance Requirements)
- Design Features
- Administrative Controls

Table 12-1 of this SER lists the TS to be implemented for the NUHOMS® HD System.

### 12.3 Evaluation Findings

F12.1 Table 12-1 of the SER lists the TSs for the use of the NUHOMS® HD System. These TSs are contained as part of the Certificate of Compliance.

F12.2 The staff concludes that the conditions for use of the NUHOMS® HD System, identify necessary TSs to satisfy 10 CFR Part 72 and that the applicable acceptance criteria have been satisfied. The TSs provide reasonable assurance that the cask will provide for safe storage of spent fuel. This finding is reached on the basis of a review that considered

the regulation itself, appropriate regulatory guides, applicable codes and standards, and accepted practices.

TABLE 12-1

NUHOMS® HD System
Technical Specifications


1.0 Use and Applications
- 1.1 Definitions
- 1.2 Logical Connectors
- 1.3 Completion Times
- 1.4 Frequency

2.0 Functional and Operating Limits
- 2.1 Fuel to be Stored in the 32PTH DSC
- 2.2 Functional and Operating Limits Violations

3.0 Limiting Condition for Operation (LCO) and Surveillance Requirement (SR) Applicability
- 3.1 32PTH DSC Fuel Integrity
- 3.2 Cask Criticality Control

4.0 Design Features
- 4.1 Site
- 4.2 Storage System Features
- 4.3 Canister Criticality Control
- 4.4 Codes and Standards
- 4.5 HSM-H Side Heat Shields
- 4.6 Storage Location Design Features

5.0 Administrative Controls
- 5.1 Procedures
- 5.2 Programs
- 5.3 Lifting Controls
- 5.4 HSM-H Dose Rate Evaluation Program
- 5.5 Concrete Testing

## 13.0 QUALITY ASSURANCE

The purpose of this review and evaluation is to determine whether TN has a quality assurance (QA) program that complies with the requirements of 10 CFR Part 72, Subpart G. The staff has previously reviewed and accepted the TN QA program. The staff has performed inspections of the QA program and found that it met regulatory requirements.

## 14.0 DECOMMISSIONING

The purpose of this review is to assess the applicant's conceptual decommissioning plan to assess whether the cask system provides adequate provisions to facilitate decommissioning of the ISFSI once the spent fuel has been transferred to the Department of Energy or some other location for storage or reprocessing. The applicable 10 CFR Part 72 requirements for decommissioning are 72.130 and 72.236(l).

### 14.1 Decommissioning Activities

Section 14 of the SAR discusses two options to remove spent fuel from the ISFSI for storage/disposal at another NRC approved location. The first option assumes that the NUHOMS® 32PTH DSC can be transferred in a transportation package that meets the requirements of 10 CFR Part 71 for final disposal. The second option requires the spent fuel to be removed from the NUHOMS® 32PTH DSC and shipped in an NRC approved transportation package.

The first option would require very little facility decommissioning. The NUHOMS® HD System design features such as providing surfaces that can be easily decontaminated and isolating the external surfaces of the 32PTH DSC from contact with the fuel pool that provide for decommissioning. Therefore, contamination at the ISFSI should be very low.

The second option would require the NUHOMS® 32PTH DSC to be decontaminated. Decontamination of the ISFSI would then be the same as the first option with the addition of decontamination and disposal of the empty DSC.

### 14.2 Evaluation Findings

The applicant's proposed cask design includes adequate provisions for decontamination and decommissioning. As discussed in Section 14 of the SAR, these provisions include facilitating decontamination of the NUHOMS® HD System, if needed; storing the remaining components, if no waste facility is expected to be available; and disposing of any remaining low-level radioactive waste.

Section 14 of the SAR presents information concerning the proposed practices and procedures for decontaminating the cask and disposing of residual radioactive materials after all spent fuel has been removed. This information provides reasonable assurance that the applicant will conduct decontamination and decommissioning in a manner that adequately protects the health and safety of the public.

The staff concludes that the decommissioning considerations for the NUHOMS® HD System are in compliance with 10 CFR Part 72. This evaluation provides reasonable assurance that the NUHOMS® HD System will allow safe storage of spent fuel. This finding is reached on the basis of a review that considered the regulation itself, appropriate regulatory guides, applicable codes and standards, and accepted engineering practices.

## 15.0 CONCLUSIONS

### 15.1 Overall Conclusion

The staff performed a detailed safety evaluation of the application for a 10 CFR Part 72 CoC for the NUHOMS® HD System. The staff performed the review in accordance with the guidance in NUREG 1536, "Standard Review Plan for Dry Cask Storage Systems," January 1997. Based on the statements and representations contained in the SAR and the conditions in the CoC, the staff concludes that the NUHOMS® HD System meets the requirements of 10 CFR Part 72.

### 15.2 Conclusion Regarding the Thermal Analysis of the HSM-H Module

The staff expressed some concerns about the accuracy of the SAR HSM-H thermal analysis methodology and of similar calculations in previous applications (see Transnuclear, Inc. Application for Amendment No. 8 to NUHOMS® Certificate of Compliance (CoC) No. 1004 for Dry Spent Fuel Storage Casks.). The applicant responded by conducting a confirmatory analysis using a different modeling approach (a robust computational fluid dynamics (CFD) program (FLUENT)) to predict the DSC surface and module temperatures, and the module flow patterns. Applicant's confirmatory CFD results for the roof concrete and top and side heat shields were higher than the ANSYS SAR results. The applicant stated that the side heat shield temperature difference is directly related to a modeling simplification (that is, the exclusion of the side heat shield fins). The staff agrees that the simplification could be a significant cause for the difference. However, the simplification could have an effect on the flow patterns in the module which could adversely affect the temperature distribution in the module and on the DSC surface.

To address staff concerns (and to validate the analysis approach), the applicant conducted a series of tests on a full scale mockup of the module and DSC shell. These tests demonstrated that the methodology used to evaluate the thermal performance of the module conservatively overestimated the DSC surface temperatures, but underestimated the temperatures of significant portions of the concrete and heat shields. The applicant evaluated these issues and modified the model to better predict component temperatures. In addition, the applicant recommended a limit on geometry changes to ensure that the final methodology could accurately predict the thermal characteristics of a modified module. Based on these findings, the staff included the following condition in CoC No. 1004:

"The use of HSM-H thermal performance methodology is allowed for evaluating HSM-H configuration changes except for changes to the HSM-H cavity height, cavity width, elevation and cross-sectional areas of the HSM-H air inlet/outlet vents, total outside height, length and width of HSM-H if these changes exceed 8% of their nominal design values shown on the approved CoC Amendment No. 8 drawings."

Because the NUHOMS®-HD is stored in the same HSM-H module, a similar condition is also included in CoC No. 1030.

## 15.3 Conclusion Regarding Analytical Method for the Effective Thermal Conductivity Within the Neutron Shield of the OS187H Transfer Cask

As discussed in Section 4.4.2.3 of this safety evaluation report, the staff reviewed TN's March 7, 2005, response to the staff's request for additional information (RAI) 4-4. TN's RAI response provided a computational fluid dynamics (CFD) method (TN Calculation No. 10494-87) to directly determine the flow regime pattern that would exist within the water that provides neutron shielding for the OS187H transfer cask. The staff concludes that this CFD model should not be used to support future amendment applications.

Issued with Certificate of Compliance No. 1030, on January 10, 2007