ATTACHMENT (8)

ENCLOSED CALCULATIONS FOR ALTERNATIVE SOURCE TERM

Non-Proprietary Versions

The following calculations are provided in this attachment:

1. H21C092, "U1 LOCA w/LOOP, AST Methodology" [Non-proprietary]*
2. H21C087, "Unit 1 LOCA Secondary Containment Bypass Piping Data"
3. H21C094, "U1 MSLB, AST Methodology"
4. H21C090, "U1 FHA, AST Methodology"
5. H21C096, "U1 CRDA, AST Methodology"
6. H21C084, "Post-LOCA Suppression Chamber (Torus) Water pH Analysis"
7. H21C076, "X/Qs for Releases from NMP Units 1 & 2 (CNS Calcs NMPAST-01-001 & NMPAST-02-001)"
8. H21C078, "Unit 1 MSLB Puff Release Atmospheric Relative Concentrations"

A compact disc (CD) containing the above calculations is also enclosed.

---

* The proprietary version of this calculation is provided in Attachment (10).

Nine Mile Point Unit 1
Alternative Source Term

Calculation H21C092

"U1 LOCA w/LOOP, AST Methodology"
[Non-proprietary]

Non-proprietary version

Polestar Proprietary [[trade secrets bracketed]]

Engineering Services	CALCULATION COVER SHEET	Page i (Next ii) Total 549 Last 2-1

Project: NINE MILE POINT NUCLEAR STATION Unit (1,2 or 0=Both): 1 Discipline: CR

Title	Calculation No.			
Unit 1 LOCA w/ LOOP, AST Methodology	H21C092			
	(Sub)system(s) N/A	Building N/A	Floor Elev. N/A	Index No. N/A

Originator(s) J. Metcalf (Main Body/App A, D, G, I, N), H. Pustulka (App C, E, F, H, J, K, L), R.Sher/J.Li (App B), R.Sher(App M) (Polestar/P28714)

Reviewer(s)/Approver(s) Independent Reviewer: D. Leaver
Accuracy Checker: D. Leaver (Main Body, App A, B, C), J. Metcalf (App E, F, L)
App D checked by App E, App G checked by App H, App I checked by J, K, App M checked by App N (Polestar/P28714)

NMP Acceptance: G.R. Stinson / [signature] 12/14/06

Rev	Description	Eval., CR, or Change No.	Prepared By	Date	Reviewed by	Date	App	Date
00	Original Issue	~~N/A~~ [signature] 12/14/06 NM-2004-856	See attached Sig. Sheet	12/12/06	See attached Sig. Sheet	12/12/06	[signature]	12/14/06

Computer Output/Microfilm separately filed? (Yes/No/N/A) N/A Safety Class: (*SR/NSR/Qxx): SR
* If SR, attach or reference the associated Design Verification Report.

Superseded Document(s): None

Document Cross Reference(s) - For additional references see page(s) 3 & 4 Output provided? Y (Y/N) If yes, group(s) Licensing [signature] 12/14/06

Ref No.	Document No.	Type	Index	Sheet	Rev	Ref No.	Document No.	Type	Index	Sheet	Rev
	Se pages 3 & 4										

General References:
See pages 3 & 4

Remarks:
This calculation provides a basis for the AST License Amendment Request 12/14/06 [signature] 12/14/06

Confirmation Required (Yes/No): No
See Page(s):

Final Issue Status APP [signature] 12/14/06

Turnover Req'd (Yes/N/A): Yes [signature] 12/14/06

10 CFR50.59 Evaluation Number(s):
Copy of Applicability Determination or 50.59 Screen Attached? Yes☐ No*☐
N/A ☒ *If "No", location of AD/Screen?

Component ID(s)(As shown in MEL): N/A

Key Words: AST, DBA, LOCA, EAB, control room, dose

Project: Nine Mile Point Nuclear Station Unit: __1__ Disposition: ____

Originator/Date	Reviewer/Date	Calculation No.	Revision
J. Metcalf 12/12/06	D.Leaver 12/12/06	H21C092	00

Ref.

Signature Page

Calc. Section	Preparer	Checker	Ind. Reviewer
Main Body	J.Metcalf	D.Leaver	D.Leaver
Appendix A	J.Metcalf	D.Leaver	D.Leaver
Appendix B	R.Sher,J.Li	D.Leaver	D.Leaver
Appendix C	H.Pustulka	D.Leaver	D.Leaver
Appendix D	J.Metcalf	Checked by App. E	D.Leaver
Appendix E	H.Pustulka	J.Metcalf	D.Leaver
Appendix F	H.Pustulka	J.Metcalf	D.Leaver
Appendix G	J.Metcalf	Checked by App. H	D.Leaver
Appendix H	H.Pustulka	N/A	N/A
Appendix I	J.Metcalf	Checked by App. J and K	D.Leaver
Appendix J	H.Pustulka	N/A	N/A
Appendix K	H.Pustulka	N/A	N/A
Appendix L	H.Pustulka	J.Metcalf	D.Leaver
Appendix M	R.Sher	Checked by N	D.Leaver
Appendix N	J.Metcalf	N/A	N/A

Project: Nine Mile Point Nuclear Station Unit: __1__ Disposition: ____

Originator/Date	Reviewer/Date	Calculation No.	Revision
J. Metcalf 12/12/06	D.Leaver 12/12/06	H21C092	00

Ref.

List of Effective Pages

Page No.	Latest Rev.	Page No.	Latest Rev.	Page No.	Latest Rev.	Page No.	Latest Rev.	Page No.	Latest Rev.	Page No.	Latest Rev.	Page No.	Latest Rev.
1	00	23	00	App M (5 p)	00								
2	00	24	00	App N (10 p)	00								
3	00	25	00	Attach 1 (2 p)	00								
4	00	26	00	Attach 2 (1 p)	00								
5	00	27	00										
6	00	28	00										
7	00	29	00										
8	00	30	00										
9	00	31	00										
10	00	32	00										
11	00	App A (13 p)	00										
12	00	App B (138 p)	00										
13	00	App C (10 p)	00										
14	00	App D (123 p)	00										
15	00	App E (135 p) 129	00	JLL 12/14/06									
16	00	App F (8 p)	00										
17	00	App G (17 p)	00										
18	00	App H (5 p)	00										
19	00	App I (15 p) 26	00	JLL 12/14/06									
20	00	App J (15 p)	00										
21	00	App K (7 p)	00										
22	00	App L (5 p)	00										

Total Number of Calculation Pages: 549

Table of Contents

CALCULATION COVER SHEET i
List of Effective Pages iii
Table of Contents 1
Summary of Results 2
Methodology 2
Assumptions 3
References 3
Design Input Summary 4
Calculation 25
ESF Leakage Treatment during Reactor Building Drawdown 26
Determination of Activity Removal Rates in the Drywell and Main Steam Lines 26
Determination of Ultimate Elemental Iodine DF 27
Calculation of Inhalation and Immersion Doses with RADTRAD – Case 1A 30
Confirmation and Supporting Calculations with STARDOSE 30
Reactor Building Shine Dose to Control Room 30
Plume Shine Dose to Control Room 31
Control Room Filter Shine Dose to Control Room 31
Confirmation of Early Actuation of RBEVS Based on Reactor Building Activity 31
Identification of Computer Analyses 31
Detailed Results 31
Conclusions 32
Appendix A Fraction of ESF Leakage Iodine Carrier Gas Released During Drawdown (13 Pages) A1
Appendix B Calculation of Drywell and Main Steam Line Lambdas (138 Pages) [Proprietary] B1
Appendix C Representative Lambdas Based on STARNAUA (10 Pages) C1
Appendix D RADTRAD Dose Analysis (123 Pages) D1
Appendix E STARDOSE Dose Analysis (129 Pages) E1
Appendix F Reactor Building Integrated Airborne Specific Activities (8 Pages) F1
Appendix G Reactor Building Shine to the Control Room Using QADMOD (17 pages) G1
Appendix H Reactor Building Shine Dose Verification (5 Pages) H1
Appendix I Plume Shine to the Control Room Using QADMOD (26 pages) I1
Appendix J Plume Integrated MeV/cc (15 Pages) J1
Appendix K Plume Shine Dose Verification (7 Pages) K1
Appendix L Control Room Shine Dose due to Filters (5 pages) L1
Appendix M Verification that RBEVS Will Actuate (5 Pages) M1
Appendix N Check Calculation for Appendix M Using QADMOD (10 Pages) N1
Attachment 1 Design Verification Report (2 Pages) 1-1
Attachment 2 Design Verification Checklist (1 Page) 2-1

Ref.

Objective

The objective of this calculation is to determine the offsite and Control Room (CR) radiological consequences arising from a Loss of Coolant Accident (LOCA) at the Nine Mile Point Unit 1 (NMP1) station. The analysis is conducted in accordance with 10CFR50.67 and Regulatory Guide (RG) 1.183 (Reference 1).

Summary of Results

The most limiting LOCA case is one assuming a single failure of an electrical division that leaves only a single train of Reactor Building Emergency Ventilation System (RBEVS) operating and forces reliance on the least effective train of containment spray. This case is referred to as Case 1A. For this case, secondary containment is not available for an assumed six hours.

The doses for this case are as follows:

	30-day CR TEDE (rem)	Max 2-hour EAB TEDE (rem)	30-day LPZ TEDE (rem)
Dose	4.81	9.02	1.60
Limit	5	25	25

Methodology

The calculation of the radiological consequences for the NMP1 LOCA is done using the RADTRAD 3.03 computer code (Reference 2). The STARDOSE computer code (Reference 3) is used to check the results of the RADTRAD analysis and also for the following:

- Confirming the limiting single failure (i.e., electrical division failure leading to the availability of only one RBEVS train and the use of the least effective drywell spray train)
- Confirming the assumption that basing the dose analysis on thermal-hydraulic conditions corresponding to successful core spray operation is more limiting than basing the analysis on the current licensing basis (CLB) at the time of this calculation; i.e., thermal-hydraulic conditions corresponding to degraded core spray but with the containment leak rate coupled to the containment pressure
- Providing activities in the Reactor Building (RB) for (1) calculating the shine dose to the CR and (2) ensuring that the RBEVS will actuate on detected radiation levels
- Providing activities in the released plume for each of three pathways (stack release, RB release, and Turbine Building (TB) release) for calculating the shine dose to the CR from the plume
- Providing activities on the CR filters to provide a basis for ratioing the calculated dose from an earlier shine calculation based on TID-14844 and RG 1.3 (References 4 and 5)
- Supporting the RADTRAD and STARDOSE calculations are the following:
- The calculation of drywell spray removal coefficients (fractional removal rates or "lambdas") and main steam line removal coefficients using the STARNAUA computer code (Reference 6)
- QADMOD (Reference 7) calculations for the RB shine and the plume shine to the CR and for the RB exhaust vent monitor dose rate to trigger operation of RBEVS. These calculations are confirmed

Ref.

manually for RB and plume shine and by MicroShield (Reference 8) for the RB exhaust vent monitor.

- A STARpH (Reference 9) Add Acid assessment of the suppression pool at 24 hours (nominal end of the spray period) to establish a minimum final DF for elemental iodine

Assumptions

1. It is assumed that a Loss of Offsite Power (LOOP) occurs at the time of the LOCA.
2. It is assumed that since drywell sprays start not later than 75 seconds (Item 7.4 of Reference 10) and the start of release occurs at 120 seconds (Item 2.1 of Reference 10), the sprays are running when the release begins.
3. It is assumed that since the filtered intake mode of the Control Room Air Treatment System (CRATS) will begin not later than 24 seconds after the start of the LOCA (Item 3.10 of Reference 10) and the start of release occurs at 120 seconds (Item 2.1 of Reference 10), the filtered intake is assumed to be available when the release begins.
4. It is assumed that the release is initially only to the drywell. At the time the release ends, the drywell and wetwell airspace are assumed to become well-mixed because of the thermal-hydraulic activity that would result from the quenching of the core and/or core debris (terminating the release).
5. It is assumed that gaseous iodine in elemental form in the primary containment will adsorb onto dispersed aerosol and be removed with the aerosol. Thus, the spray removal rate is that of aerosol except not greater than 20 per hour.
6. It is assumed that elemental iodine removed on aerosol has no DF limit. This is supported by the calculation in that the calculated elemental iodine DF is so large, the residual elemental iodine airborne would be negligible relative to the 0.15% organic iodine that is not removed from the containment atmosphere at all.
7. It is assumed that aerosol reaching the first closed valve in RB bypass pathways (including MSIV leakage) experiences a DF of 2 due to impaction. This applies also to the adsorbed elemental iodine.
8. It is assumed that no activity removal of any kind occurs in any RB bypass pathway beyond the first closed containment isolation valve except for aerosol removal in the horizontal space between two closed MSIVs.
9. It is assumed that the ESF leakage is a factor of two greater than the value given in the design input section per the requirement of Reference 1.

References

1. NRC Regulatory Guide 1.183, "Alternative Source Terms for Evaluating Design Basis Accidents At Nuclear Power Reactors," Dated July 2000.
2. NUREG/CR-6604, "RADTRAD: A simplified model for Radionuclide Transport and Removal

Ref.

And Dose Estimation," Dated April 1998 (with Supplements 1 and 2).

3. STARDOSE Model report, Polestar Applied Technology, Inc., Rev. 1, March 2002.
4. Technical Information Document (TID) - 14844, "Calculation of Distance Factors for Power and Test Reactor Sites," U.S. Atomic Energy Commission, Dated March 23, 1962.
5. NRC Regulatory Guide 1.3, "Assumptions Used for Evaluating the Potential Radiological Consequences of a Loss of Coolant Accident for Boiling Water Reactors," Dated June 1974.
6. PSAT C101.02, "STARNAUA - A Code for Evaluating Severe Accident Aerosol Behavior in Nuclear Power Plant Containment: A Validation and Verification Report", Revision 1.04, Dated November 2005
7. "QADMOD-GP: Point Kernel Gamma-Ray Shielding Code With Geometric Progression Buildup Factors", RSIC Code Package CCC-565.
8. MicroShield, Version 5.0.3, Grove Engineering
9. STARpH, "A Code for Evaluating Containment Water Pool pH during Accidents," Revision 4, February 2000, Polestar Applied Technology, Inc.
10. PSAT 4026CF.QA.03, "Design Data Base for Application of the Alternative DBA Source Term to Nine Mile Point Unit 1" Revision 0
11. R. R. Hobbins, "Effect of Temperature on the Dissociation Constant of a Weak Acid", Polestar Applied Technology, Inc., Proprietary Memorandum, September 11, 2000
12. NUREG/CR-5732, "Iodine Chemical Forms in LWR Severe Accidents"

Design Input Summary

Note that Item numbers refer to Project Database (Reference 10)

Core Power - 1887MWt (Item 1.1)

Core Inventory @ t=0 (Item 1.2):

Nuclide	Ci/MWt	Nuclide	Ci/MWt	Nuclide	Ci/MWt
Kr83m	3.27E+03	Ru106	1.76E+04	Cs134	7.29E+03
Kr85	3.93E+02	Rh105	2.84E+04	Cs136	2.28E+03
Kr85m	6.82E+03	Sb127	3.01E+03	Cs137	4.35E+03
Kr87	1.30E+04	Sb129	8.91E+03	Ba137m	4.12E+03
Kr88	1.83E+04	Te127	3.00E+03	Ba139	4.89+04
Kr89	2.22E+04	Te127m	4.05E+02	Ba140	4.71+04
Rb86	7.29E+01	Te129	8.76E+03	La140	5.12+04
Sr89	2.45E+04	Te129m	1.30E+03	La141	4.45+04
Sr90	3.14E+03	Te131m	3.97E+03	La142	4.29+04
Sr91	3.10E+04	Te132	3.85E+04	Ce141	4.47+04
Sr92	3.38E+04	I131	2.71E+04	Ce143	4.11+04

Ref.

Y90	3.24E+03	I132	3.92E+04	Ce144	3.70+04
Y91	3.18E+04	I133	5.51E+04	Pr143	3.97+04
Y92	3.40E+04	I134	6.03E+04	Nd147	1.80+04
Y93	3.96E+04	I135	5.16E+04	Np239	5.78E+05
Zr95	4.46E+04	Xe131m	3.04E+02	Pu238	1.45E+02
Zr97	4.51 E+04	Xe133	5.27E+04	Pu239	1.34E+01
Nb95	4.48 E+04	Xe133m	1.63E+03	Pu240	1.89E+01
Mo99	5.13 E+04	Xe135	1.91E+04	Pu241	5.49E+03
Tc99m	4.49 E+04	Xe135m	1.09E+04	Am241	7.48E+00
Ru103	4.29 E+04	Xe137	4.80E+04	Cm242	1.85E+03
Ru105	3.01 E+04	Xe138	4.50E+04	Cm244	1.23E+02

Fraction of core inventory released, 0-120 seconds (Item 2.1):

No Release

Fraction of core inventory released, 120 – 1920 seconds (Item 2.2):

Gases Xe, Kr – 0.1 /hr (0.05 total)
Elemental I – 4.9E-3 /hr (2.4E-3 total)
Organic I – 1.5E-4 /hr (7.5E-5 total)

Aerosols I, Br – 0.095 /hr (0.0475 total)
Cs, Rb – 0.1 /hr (0.05 total)

Fraction of core inventory released, 1920 – 7320 seconds (Item 2.3):

Gases Xe, Kr – 0.633 /hr (0.95 total)
Elemental I – 8.1E-3 /hr (1.2E-2 total)
Organic I – 2.5E-4 /hr (3.8E-4 total)

Aerosols I, Br – 0.158 /hr (0.2375 total)
Cs, Rb – 0.133 /hr (0.2 total)
Te Group – 0.033 /hr (0.05 total)
Ba, Sr – 0.013 /hr (0.02 total)
Noble Metals – 1.7E-3 /hr (2.5E-3 total)
La Group – 1.3E-4 /hr (2E-4 total)
Ce Group – 3.3E-4 /hr (5E-4 total)

Reference Control Room Filter Iodine Loading (Item 2.4):

Iodine Isotope	Integrated Activity (Ci-sec)
I131	7.31E4

Ref.

I132	9.34E2
I133	1.34E4
I134	3.04E2
I135	3.98E3

Minimum Primary Containment Free Air Volume - 3.00E+05 ft^3 (Item 3.1)

a) Minimum Volume of Drywell (DW) - 1.80E+05 ft^3

b) Minimum Volume of Wetwell (WW) Vapor - 1.20E+05 ft^3

Minimum Volume of WW Water - 7.97E+04 ft^3 (min) (Item 3.2)

Mass Flowrate, DW to All Main Steam Lines (total Leakage) - 100 scfh (Item 3.3)

Mass Flowrate, DW to Any One Main Steam Lines (total Leakage) - 50 scfh (Item 3.4)

Mass Flowrate, Non-MSIV Reactor Building Bypass – 41.5 scfh (Item 3.5)

Volume of One Main Steam Line Between MSIVs - 82.4 ft^3 (Item 3.6)

Initial DW Leakrate at P_a - 1.875 cfm (based on 1.5 %/day of containment free volume) (Item 3.7)

WW Leakrate at P_a - 1.25 cfm (based on 1.5 %/day of containment free volume) (Item 3.8)

Volume of Control Room (CR) (free volume) - 1.35E+05 ft^3 (Item 3.9)

Volumetric Flowrate Environment to CR (Filtered) - 2025 cfm (24 sec to 30 days post-accident) (minimum flow is bounding per calculation in Appendix E) (Item 3.10)

Secondary Containment Volume to Be Credited for Holdup - 3.01E+10 cc (Item 3.11)

Volumetric ESF (ECCS) Leakage into Secondary Containment - 600 gph (Item 3.12)

DW Spray Flowrate - 6449 gpm (primary), 6383 gpm (secondary) (Item 3.13)

Headers	Flow (gpm) Primary	Secondary
A	1127	1703
B	1050	1664
C	3792	2523
D	308	*
E	*	311
F	*	182
G	172	*

*Flow not considered if less than 24 psid across nozzle

Control Room Unfiltered Inleakage for LOCA – 100 cfm (Item 3.17)

Maximum Suppression Pool Volume – 8.6E4 ft^3 (Item 3.20)

Volume of SLC Injection – 1,325 gallons (Item 3.21)

RBEVS Exhaust Rate per Train – 1600 cfm (Item 3.22)

Maximum Normal Reactor Building Exhaust Rate – 70,000 cfm (Item 3.24)

Ref.

Filter Efficiency-Reactor Building Emergency Ventilation (RBEVS) (Item 4.1):

90% efficiency for organic iodine

95% efficiency for particulate and elemental iodine

Filter Efficiency-CR Intake Filter (Item 4.2):

90% efficiency for organic iodine

95% efficiency for particulate and elemental iodine

Release Fraction of Radioiodine in ESF Leakage (%) – 10 (Item 4.3)

X/Q for EAB (s/m^3) (Item 5.1):

	Worst 2 hr
Stack (fumigation):	5.98E-05
Stack (normal):	N/A (fumigation assumed to last two hours)
Ground-level:	1.90E-04

X/Q for LPZ (s/m^3) (Item 5.2):

	Worst 4 hr	Rest of 0-8 hr	8-24 hr	24-96 hr	96-720 hr
Stack (fumigation)	2.12E-05				
Stack (normal)		1.26E-06	8.40E-07	3.45E-07	1.11E-07
Ground-level	1.63E-05	1.63E-05	1.10E-05	4.67E-06	1.37E-06

X/Q for CR (s/m^3) (Item 5.3)

	Worst 2 hr	Rest of 0-8 hr	8-24 hr	24-96 hr	96-720 hr
Stack (fumigation)	2.27E-04				
Stack (normal)		1.26E-04	4.30E-05	3.58E-05	2.59E-05
TB Blowout Panel	1.03E-03	5.85E-04	2.07E-04	1.75E-04	1.52E-04
RB Blowout Panel	4.82E-04	2.61E-04	9.25E-05	6.70E-05	4.93E-05
MSLB Puff Release	9.98E-04				

Breathing Rates (Item 5.4):

Control Room

0 – 30 days - 3.5E-4 m^3/sec

EAB, LPZ, Environment

0 - 8 hours - 3.5E-4 m^3/sec

8 - 24 hours - 1.8E-4 m^3/sec

1 - 30 days - 2.3E-4 m^3/sec

Control Room Occupancy Factors (Item 5.5):

From t=0 to t=1 day - 1.0

From t=1 to t=4 days - 0.6

From t=4 to t=30 days - 0.4

Ref.

Normal Operating Steam Line Temp (°F) (for MSIV Leakage) - 550°F (Item 6.1)

Assumed Drywell Conditions for Converting Bypass SCFH to CFH (including MSIV) (Item 6.2):

P_a = 35 psig = ~50 psia, T_{max} = 281°F ($T_{saturation}$ for steam at 50 psia)

Project: Nine Mile Point Nuclear Station Unit: __1__ Disposition: ____

Originator/Date	Reviewer/Date	Calculation No.	Revision
J. Metcalf 12/12/06	D.Leaver 12/12/06	H21C092	00

Ref.

Drywell Pressure – with and without Core Spray (Item 6.3):

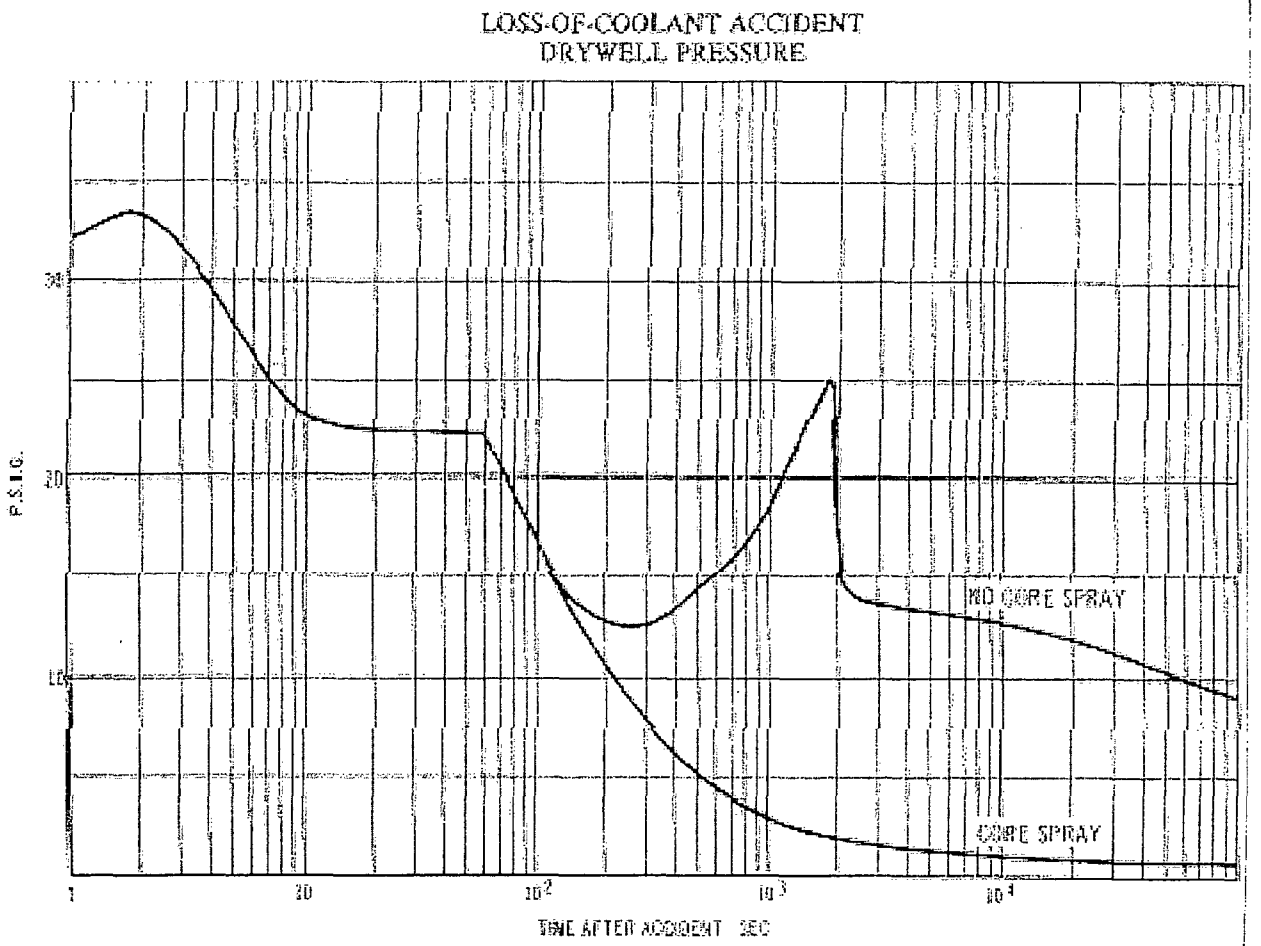

Secondary Containment Drawdown (minutes) (Item 6.4) - 40 (2 trains of RBEVS)
- 298 (single train of RBEVS)

Ref.

Reactor Building Pressure Prior to Establishing Secondary Containment – Single Train RBEVS Operation (Item 6.5 – plot of data in Attachment 2 of Reference 10):

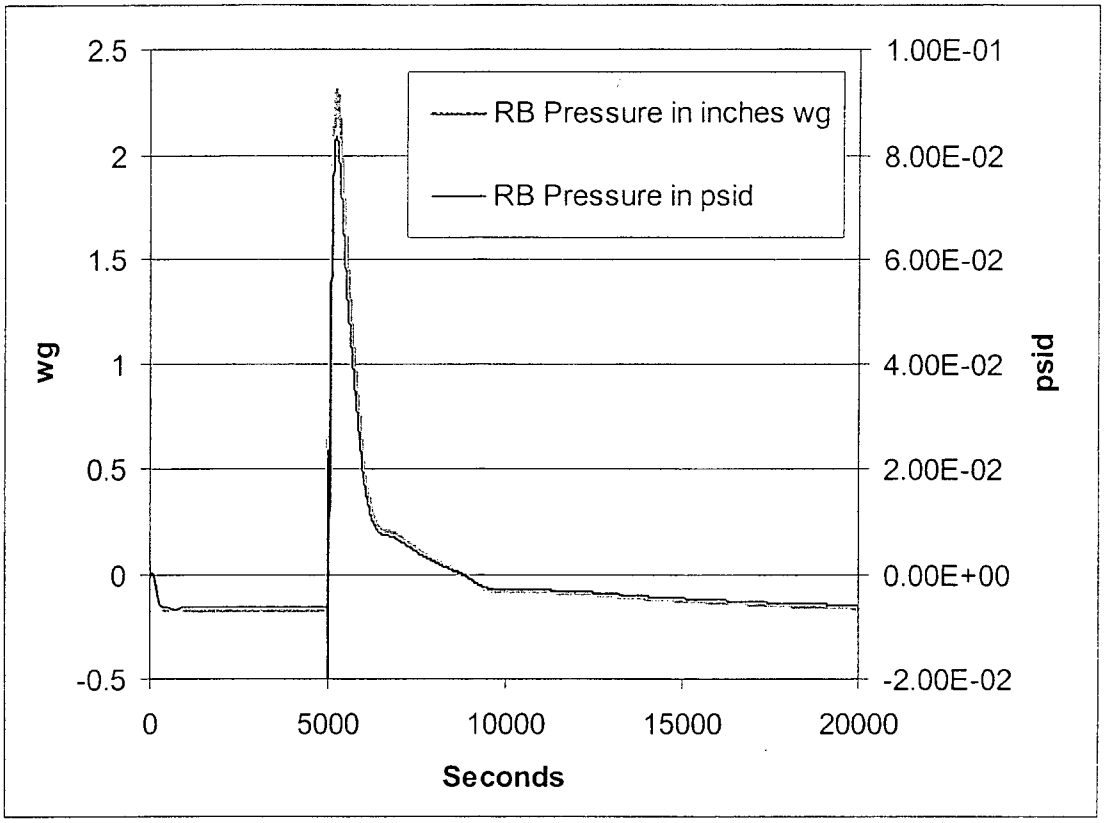

*Note: First 5000 seconds is stabilization period for GOTHIC; accident begins at t = 5000 sec.

Project: Nine Mile Point Nuclear Station Unit: __1__ Disposition: ____

Originator/Date	Reviewer/Date	Calculation No.	Revision
J. Metcalf 12/12/06	D.Leaver 12/12/06	H21C092	00

Ref.

Drywell Pressure – Long-Term with CAD Operation (Item 6.6):

Figure VII - 16. Containment Pressure Following CAD Actuation – Inerted Containment

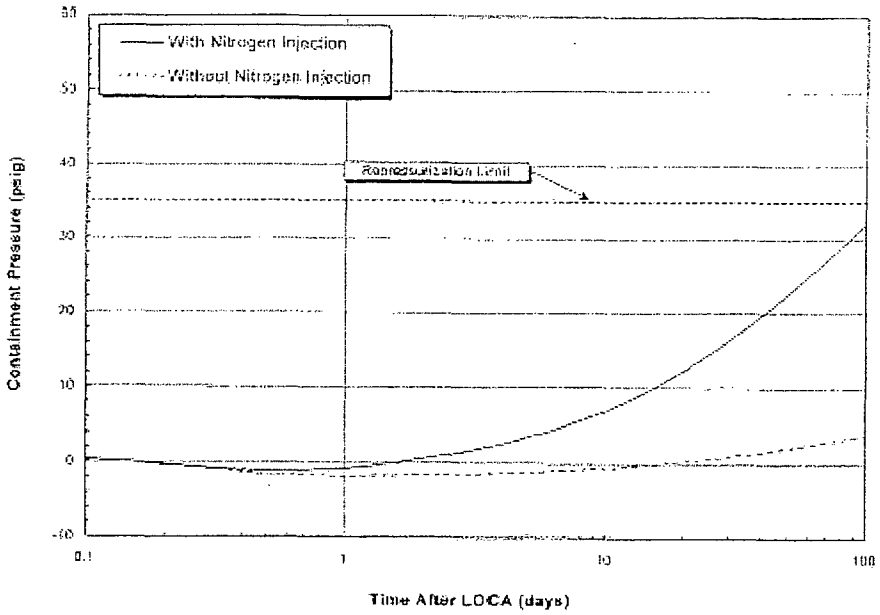

Project: Nine Mile Point Nuclear Station Unit: __1__ Disposition: ____

Originator/Date	Reviewer/Date	Calculation No.	Revision
J. Metcalf 12/12/06	D.Leaver 12/12/06	H21C092	00

Ref.

Drywell Temperature – With Core Spray (Item 6.7):

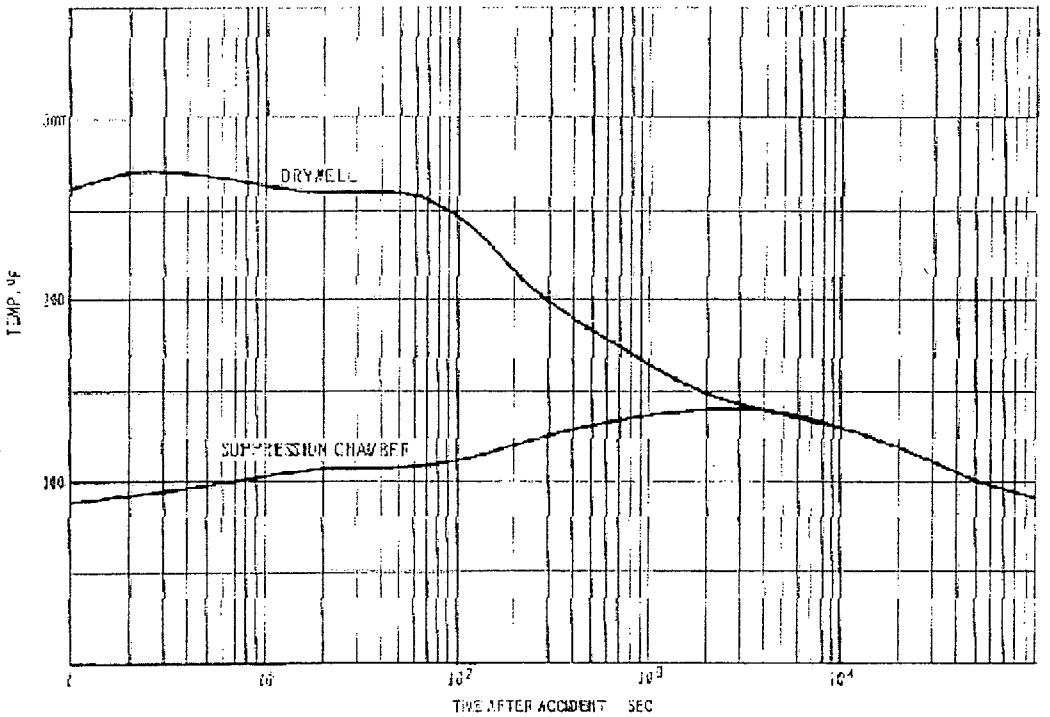

Project: Nine Mile Point Nuclear Station Unit: __1__ Disposition: ____

Originator/Date	Reviewer/Date	Calculation No.	Revision
J. Metcalf 12/12/06	D.Leaver 12/12/06	H21C092	00

Ref.

Drywell Temperature – Without Core Spray (Item 6.8)

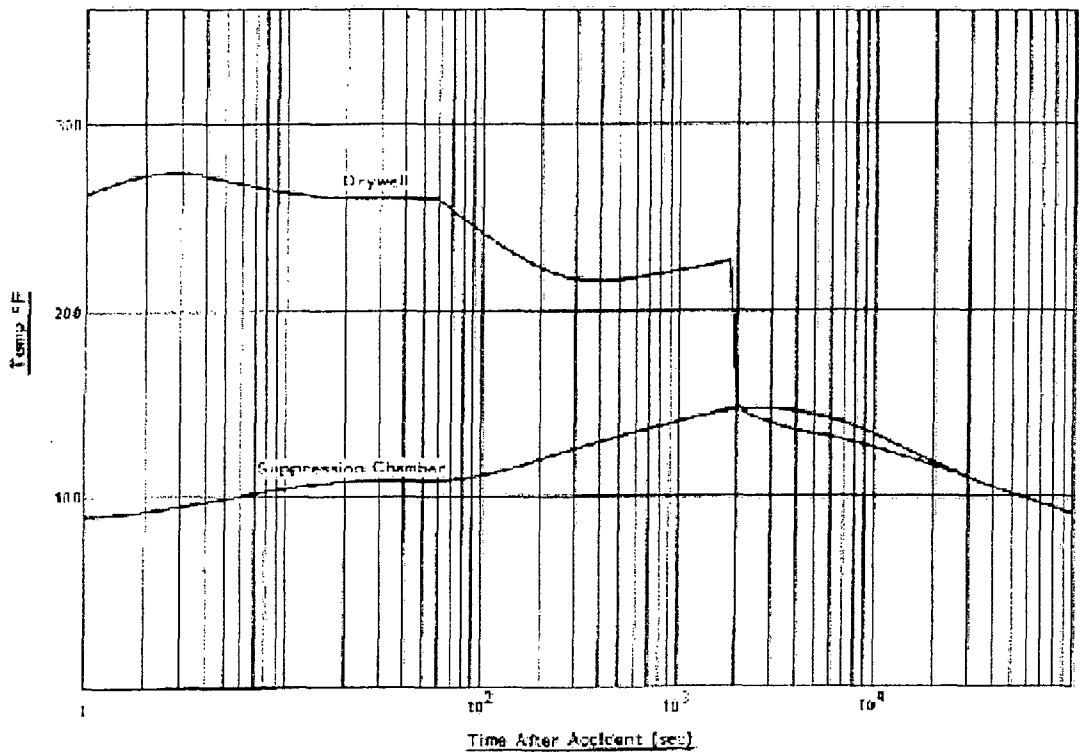

Effective Inleakage Area Used in Drawdown Analysis = $A/\sqrt{K}$ = 0.8 ft^2 (Item 6.9)

95th Percentile Wind Speed – 22 mph (Item 6.10)

Max Positive Cp Value Considered on Windward Side of RB in Drawdown Analysis – 0.8 (Item 6.11)

Windward-Side Inleakage Area Multiplier Used in Drawdown Analysis – 0.8 (Item 6.12)

Maximum Suppression Pool Temperature – 164.8 F (Item 6.13)

Spray Initiation Time - $\leq$ 75 seconds (Item 7.4)

Ref.

Drywell Spray System Layout (Item 7.5):

A Primary Loop in the drywell with three ring headers as follows

- Ring header "C": Elev 260'6"; 84, 1/2" diameter nozzles
- Ring header "D": Elev 279'; 8, 1/2 diameter nozzles
- Ring header "G": Elev 310'; 10, 3/8 diameter nozzles

A Secondary loop in the drywell with four ring headers as follows

- Ring header "A": Elev 245'; 42, 1/2" diameter nozzles
- Ring header "B": Elev 255'; 42, 1/2" diameter nozzles
- Ring header "E": Elev 284'; 8, 1/2" diameter nozzles
- Ring header "F": Elev 306'; 10, 3/8" diameter nozzles

Drywell Spray Initiation Based on Radiation (R/Hr) - 4E6 (Item 7.7)

Project: Nine Mile Point Nuclear Station Unit: __1__ Disposition: ____

Originator/Date	Reviewer/Date	Calculation No.	Revision
J. Metcalf 12/12/06	D.Leaver 12/12/06	H21C092	00

Ref.

Reactor Building Vent Monitor and Exhaust Trunk Arrangement (Item 7.8):

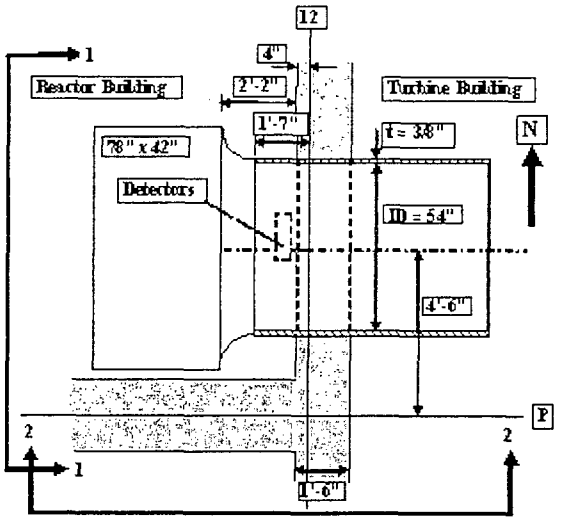

Plan View

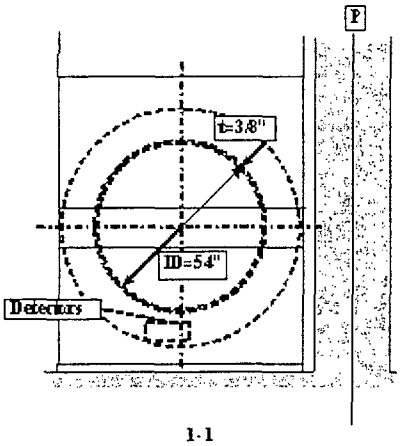

1-1

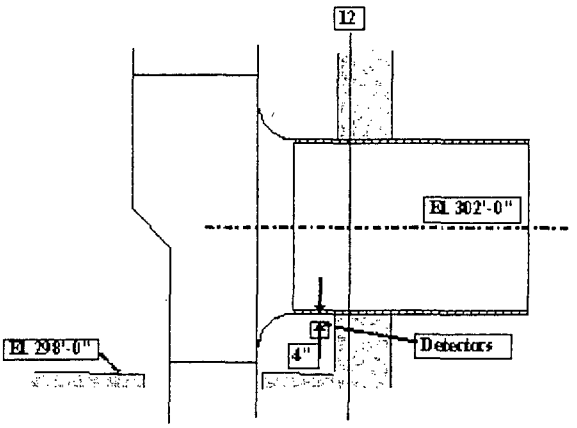

2-2

Spray Nozzle/ and Spray Droplet – Test Observations (Item 7.9):

- At 80 psid, size range - 10 to 400 μm
- At 30 psid, size range - 500 to 1000 μm

Reactor Building Vent Monitor Setpoint for RBEVS Initiation – 5 mr/hr (Item 7.14)

DW Spray Pressure Drops (Item 7.15):

Headers	DP (psid) Primary	DP (psid) Secondary
A	28	64
B	24	61
C	55	24
D	45	*

Ref.

E	*	44
F	*	34
G	30	*

*Flow not considered if less than 24 psig across nozzle

Molecular Weight of Sodium Pentaborate ($Na_2O \bullet 5B_2O_3 \bullet 10H_2O$) with Boron of 62.5% Enrichment - 586 g/mol (Item 7.16)

Mass of Sodium Pentaborate Buffer Added by the SLCS - 4.52E5 g (Item 7.17)

Mass of Primary Coolant during Normal Operations – 501,500 lbm (Item 7.18)

Suppression pool pH at 24 Hours without Addition of Buffer – 4.2 (Item 7.19)

Ref.

Suppression pool pH Transient without Addition of Buffer (tabular and chart) (Item 7.20):

Time (sec)	pH
132	5.4
1898	7.3
3641	7.9
7157	8.4
7383	8.4
10922	8.3
14448	8.2
17288	8.1

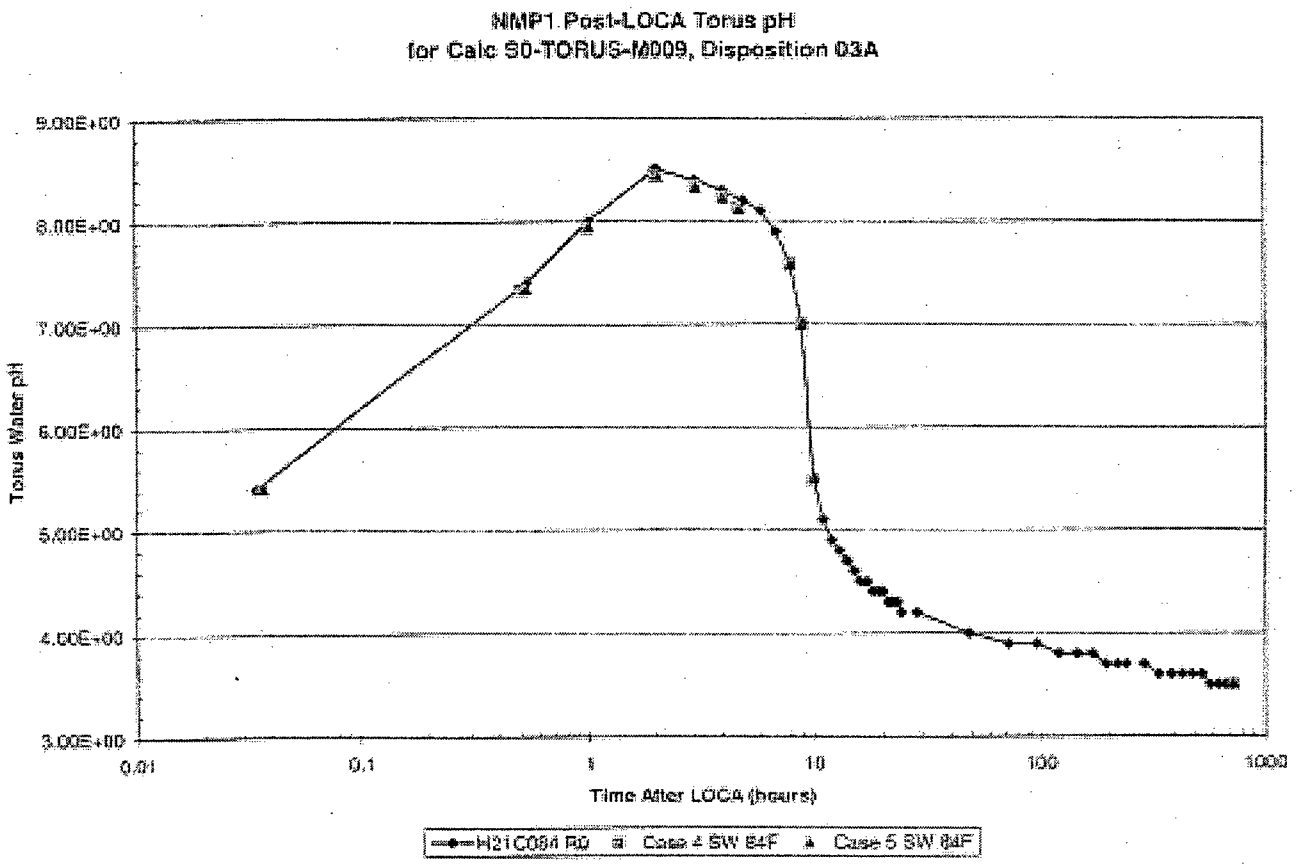

Drywell Floor Elevation – 225'-6" (Item 8.1)

Ref.

External Exposure DCFs (Rem-m^3/Ci-sec = 3.7E12 x Sv-m^3/Bq-sec) (Item 9.1):

Nuclide	Sv-m^3 / Bq-sec	Rem-m^3 / Ci-sec
Noble Gas Group		
Kr83m	1.50E-18	5.55E-06
Kr85m	7.48E-15	2.77E-02
Kr85	1.19E-16	4.40E-04
Kr87	4.12E-14	1.52E-01
Kr88	1.02E-13	3.77E-01
Kr89	N/A	3.23E-01
Xe131m	3.89E-16	1.44E-03
Xe133m	1.37E-15	5.07E-03
Xe133	1.56E-15	5.77E-03
Xe135m	2.04E-14	7.55E-02
Xe135	1.19E-14	4.40E-02
Xe137	N/A	3.03E-02
Xe138	5.77E-14	2.13E-01
Halogen Group		
I131	1.82E-14	6.73E-02
I132	1.12E-13	4.14E-01
I133	2.94E-14	1.09E-01
I134	1.30E-13	4.81E-01
I135	8.29E-14	3.07E-01
Alkali Metals Group		
Rb86	4.81E-15	1.78E-02
Rb88	3.36E-14	1.24E-01
Cs134	7.57E-14	2.80E-01
Cs136	1.06E-13	3.92E-01
Cs137	2.73E-14	1.01E-01
Tellurium Group		
Sb127	3.33E-14	1.23E-01
Sb129	7.14E-14	2.64E-01
Te127m	1.47E-16	5.44E-04
Te127	2.42E-16	8.95E-04
Te129m	3.34E-15	1.23E-02
Te129	2.75E-15	1.02E-02
Te131m	7.46E-14	2.76E-01
Te132	1.03E-14	3.81E-02
Barium Group		
Ba137m	2.88E-14	1.07E-01

Ref.

Ba139	2.17E-15	8.03E-03
Ba140	8.58E-15	3.17E-02
Noble Metals Group		
Mo99	7.28E-15	2.69E-02
Tc99m	5.89E-15	2.18E-02
Ru103	2.25E-14	8.33E-02
Ru105	3.81E-14	1.41E-01
Ru106	1.04E-14	3.85E-02
Rh105	3.72E-15	1.38E-02
Lanthanum Group		
Y90	1.90E-16	7.03E-04
Y91	2.60E-16	9.62E-04
Y92	1.30E-14	4.81E-02
Y93	4.80E-15	1.78E-02
Zr95	3.60E-14	1.33E-01
Zr97	4.43E-14	1.64E-01
Nb95	3.74E-14	1.38E-01
La140	1.17E-13	4.33E-01
La141	2.39E-15	8.84E-03
La142	1.44E-13	5.33E-01
Pr143	2.10E-17	7.77E-05
Nd147	6.19E-15	2.29E-02
Am241	8.18E-16	3.03E-03
Cm242	5.69E-18	2.11E-05
Cm244	4.91E-18	1.82E-05
Cerium Group		
Ce141	3.43E-15	1.27E-02
Ce143	1.29E-14	4.77E-02
Ce144	2.77E-15	1.03E-02
Np239	7.69E-15	2.85E-02
Pu238	4.88E-18	1.81E-05
Pu239	4.24E-18	1.57E-05
Pu240	4.75E-18	1.76E-05
Pu241	7.25E-20	2.68E-07
Strontium Group		
Sr89	7.73E-17	2.86E-04
Sr90	7.53E-18	2.79E-05
Sr91	4.92E-14	1.82E-01
Sr92	6.79E-14	2.51E-01

Ref.

Inhalation DCFs (Rem/Ci = 3.7E12 x Sv/Bq) (Item 9.2):

Nuclide	Sv / Bq	Rem / Ci
Noble Gas Group		
Kr83m	N/A	N/A
Kr85m	N/A	N/A
Kr85	N/A	N/A
Kr87	N/A	N/A
Kr88	N/A	N/A
Kr89	N/A	N/A
Xe131m	N/A	N/A
Xe133m	N/A	N/A
Xe133	N/A	N/A
Xe135m	N/A	N/A
Xe135	N/A	N/A
Xe137	N/A	N/A
Xe138	N/A	N/A
Halogen Group		
I131	8.89E-09	3.29E+04
I132	1.03E-10	3.81E+02
I133	1.58E-09	5.85E+03
I134	3.55E-11	1.31E+02
I135	3.32E-10	1.23E+03
Alkali Metals Group		
Rb86	1.79E-09	6.62E+03
Rb88	2.26E-11	8.36E+01
Cs134	1.25E-08	4.63E+04
Cs136	1.98E-09	7.33E+03
Cs137	8.63E-09	3.19E+04
Tellurium Group		
Sb127	1.63E-09	6.03E+03
Sb129	1.74E-10	6.44E+02
Te127m	5.81E-09	2.15E+04
Te127	8.60E-11	3.18E+02
Te129m	6.47E-09	2.39E+04
Te129	2.09E-11	7.73E+01
Te131m	1.73E-09	6.40E+03
Te132	2.55E-09	9.44E+03
Barium Group		
Ba137m	N/A	N/A

Ref.

Ba139	4.64E-11	1.72E+02
Ba140	1.01E-09	3.74E+03
Noble Metals Group		
Mo99	1.07E-09	3.96E+03
Tc99m	8.80E-12	3.26E+01
Ru103	2.42E-09	8.96E+03
Ru105	1.23E-10	4.55E+02
Ru106	1.29E-07	4.77E+05
Rh105	2.58E-10	9.55E+02
Lanthanum Group		
Y90	2.28E-09	8.44E+03
Y91	1.32E-08	4.88E+04
Y92	2.11E-10	7.81E+02
Y93	5.82E-10	2.15E+03
Zr95	6.39E-09	2.36E+04
Zr97	1.17E-09	4.33E+03
Nb95	1.57E-09	5.81E+03
La140	1.31E-09	4.85E+03
La141	1.57E-10	5.81E+02
La142	6.84E-11	2.53E+02
Pr143	2.19E-09	8.10E+03
Nd147	1.85E-09	6.85E+03
Am241	1.20E-04	4.44E+08
Cm242	4.67E-06	1.73E+07
Cm244	6.70E-05	2.48E+08
Cerium Group		
Ce141	2.42E-09	8.95E+03
Ce143	9.16E-10	3.39E+03
Ce144	1.01E-07	3.74E+05
Np239	6.78E-10	2.51E+03
Pu238	7.79E-05	2.88E+08
Pu239	8.33E-05	3.08E+08
Pu240	8.33E-05	3.08E+08
Pu241	1.34E-06	4.96E+06
Strontium Group		
Sr89	1.76E-09	6.51E+03
Sr90	6.46E-08	2.39E+05
Sr91	2.52E-09	9.32E+03
Sr92	1.70E-10	6.29E+02

Ref.

QADMOD Model for Reactor Building Shine (taken from H21C043, Attachment 1 to Reference 10) (Item 10.1):

(Note that shielding material indices were reversed – see box below – correction shown)

```
Unit 1 LOCA  Control Room  Reactor Building Shine
  8   2   0   2  25  33   2  -2   1  12   6  16
                  0   1
 3.01+10
    0.0  300.23  600.45  900.68 1200.90 1501.13 1801.35 2101.58
 2401.80 2702.03 3002.25 3302.48 3602.70
10363.20 10644.12 10925.05 11205.97 11486.89 11767.82 12048.74
    0.0  309.56  619.13  928.69 1238.25 1547.81 1857.38 2166.94
 2476.50 2786.06 3095.63 3405.19 3714.75 4024.31 4333.88 4643.44
 4953.00
 1    1 3602.70
 2    1 5443.20
 3    1 5534.60
 4    1 6052.80
 5    1 6144.30
 6    1 7448.60
 7    1 7463.80
 8    1 7555.20
 9    1 8723.60
10    1 10110.50
11    1 10739.10
12    1 10769.60
13    1 12324.10
14    2 3695.70
15    2 4953.00
16    2 6088.40
17    2 6179.80
18    2 6225.50
19    2 6286.50
20    2 6736.10
21    2 6766.60
22    3 10363.20
```

Project: Nine Mile Point Nuclear Station Unit: __1__ Disposition: ____

Originator/Date	Reviewer/Date	Calculation No.	Revision
J. Metcalf 12/12/06	D.Leaver 12/12/06	H21C092	00

Ref.

```
23   3 10110.50
24   3  9144.00
25   3  9123.70
 1   1  1 15 22                    10.     10.     10.
 2   2  1 15 22                    10.     10.  11000.
 3   2  1 15                      10.   6000.     10.
 4   2  1  2                    4000.   6000.     10.
 5   2  2 11 20                   8000.   8000.     10.
 6   2  2  9 17 20                8000.   6400.     10.
 7   2  2  4 14 17 23              5500.   5000.     10.
 8   1  2  3 14 23                5500.   3000.     10.
 9   2  3  6 14 24                6000.   2000.     10.
10   2  3  7 14 23 24               6000.   2000.  10000.
11   1  4  5 14 17 23               6100.   5000.     10.
12   2  5  6 14 16 24               6600.   5000.     10.
13   2  5  7 14 16 23 24              6600.   5000.  10000.
14   1  6  8 16 24                7500.   2000.     10.
15   1  7  8 16 23 24               7500.   2000.  10000.
16   2  2  8 17 23                6000.   2000.  12000.
17   2  8  9 16                   8000.   2000.     10.
18   1  5  9 16 17 23               8000.   6100.     10.
19   2  8  9 16 17 23               8000.   6100.  12000.
20   2  9 10 18                   9000.   2000.     10.
21   1  9 10 18 19 24               9000.   6250.     10.
22   2  9 10 18 19 24               9000.   6250.  12000.
23   2  9 10 19 20                9000.   6400.     10.
24   2 10 16                     12000.   2000.     10.
25   1 10 13 16 17 24               10500.   6100.     10.
26   2 10 13 16 17 24               10500.   6100.  12000.
27   2 10 17 20                  12000.   6400.     10.
28   2 13 16 17                  13000.   6100.     10.
29   1 11 12 20 24                10750.   8000.     10.
30   1 12 20 21 24                12000.   6750.     10.
31   2 12 21 25                  12000.   8000.     10.
32   1 12 21 24 25                12000.   8000.   9130.
```

Ref.

```
33    2 11 20 24                    12000.   8000.   12000.
  2.05
      1.225-3
25  23
2.82+10  1.11+10  2.15+9  1.59+9  5.85+8  5.31+8  3.63+5    0.0
6.84-10  5.83-10  5.10-10  4.69-10  4.32-10  4.13-10  3.67-10  3.01-10
MEV PER            REM     CM**2
10799.59  6796.60  8625.84   1                    DP #1
10799.59  8509.48  8625.84   1                    DP #2
12934.79  8509.48  8625.84   1                    DP #3
10799.59  6750.84  9145.00   1                    DP #4
10799.59  8509.48  9145.00   1                    DP #5
12934.79  8509.48  9145.00   1                    DP #6
                  -1
```

QADMOD Model for Plume Shine (taken from H21C043, Attachment 1 to Reference 10) (Item 10.2):

```
Unit 1 LOCA  Control Room  Cloud Shine
 8   2   0   2   2   3   3  -2   2  15  10  10
                 0   1
5.54+14
  0.0   30.48   79.61   158.82   286.51   492.34   824.16  1395.05
2221.33  3611.35  5852.12  9464.33 15827.36 24674.31 39806.46 64200.00
  0.0   0.157   0.314   0.417   0.628   0.785   0.942   1.100
 1.257   1.414   1.571
  0.0   0.157   0.314   0.417   0.628   0.785   0.942   1.100
 1.257   1.414   1.571
1    3  9123.68
2    3  9144.00
1    1  1                        0.0     0.0   9000.00
2    2  1  2                      0.0     0.0   9130.00
3    1  2                        0.0     0.0   9200.00
1.225-3
      2.35
23  25
2.79+4   7.27+4  2.24+4   2.34+4   4.57+4   5.97+4   5.42+2    0.0
6.84-10  5.83-10  5.10-10  4.69-10  4.32-10  4.13-10  3.67-10  3.01-10
```

Ref.

*MEV PER REM CM**2*

0.0 0.0 8625.84 1 DET. 1

-1

Dose from CR Filter Shine – 2.51E-3 rem (taken from H21C043, Attachment 1 to Reference 10) - 2.51E-3 rem (Item 10.3)

Calculation

The calculation is divided into several parts as follows:

- ESF Leakage Treatment during Reactor Building Drawdown
- Determination of Activity Removal Rates
- Determination of the Ultimate DF for Elemental Iodine
- Calculation of Inhalation and Immersion Doses with RADTRAD – Case 1A
- Confirmation and Supporting Calculations with STARDOSE
- Reactor Building Shine Dose to Control Room
- Plume Shine Dose to Control Room
- Control Room Filter Shine Dose to Control Room
- Confirmation of Early Actuation of RBEVS Based on Reactor Building Activity

In performing the LOCA calculation, several cases have been identified. These are defined as follows:

- Case 1A – This is the LOCA with an assumed electrical division failure leading to the availability of only one RBEVS train and the use of the least effective drywell spray train. It is analyzed in integrated form only with STARDOSE.
- Case 1Aa – For RADTRAD, this is the analysis of the MSIV leakage and other permanent bypass of the RB.
- Case 1Ab – For RADTRAD, this is the analysis of the temporary bypass of the RB during RB drawdown.
- Case 1Ac – For RADTRAD, this is the analysis of the stack release for containment leakage after secondary containment (SC) has been established.
- Case 1Ad – For RADTRAD, this is the analysis of ESF leakage iodine re-evolution bypassing SC.
- Case 1Ae – For RADTRAD, this is analysis of the stack release for ESF leakage iodine re-evolution.
- Case 1Ax – For STARDOSE, this is the analysis of activity released with the TB X/Q for purposes of calculating plume shine with Case 1A.
- Case 1Ay – For STARDOSE, this is the analysis of activity released with the RB X/Q for purposes of calculating plume shine with Case 1A.
- Case 1Az – For STARDOSE, this is the analysis of activity released with the stack X/Q for purposes of calculating plume shine with Case 1A.
- Case 1A_filter – For STARDOSE, this is the analysis of activity trapped on the control room filter.
- Case 1A_RBEVS – For STARDOSE, this is the analysis that provides airborne activity in the

Ref.

reactor building with normal ventilation operating. It is used to confirm RBEVS start time.

- Case 1B - This is the LOCA with an MSIV failure to close. It is analyzed only with STARDOSE to demonstrate that Case 1A is limiting. Since both trains of RBEVS are available for this case, the drawdown time is ~40 minutes, and this makes this case far less challenging than the 298 minute drawdown of Case 1A (analyzed as a six hour drawdown for additional conservatism) in spite of the failed open MSIV.
- Case 2A – This is also a LOCA with an assumed electrical division failure leading to the availability of only one RBEVS train and the use of the least effective drywell spray train. It differs from Case 1A in that the drywell pressure and temperature are assumed to correspond to the "no core spray" case presented in the UFSAR (see the Design Input Summary and Items 6.3 and 6.8 of Reference 10) and also consider the effects of CAD operation (Design Input Summary and Item 6.6 of Reference 10). However, pursuant to the original licensing basis, the containment leakage (including RB bypass) is considered a function of drywell pressure. This case is only analyzed with STARDOSE to demonstrate that Case 1A is limiting.

ESF Leakage Treatment during Reactor Building Drawdown

This analysis is presented in Appendix A. In Appendix A, the gas volumetric flow rate necessary to purge the re-evolved iodine from ESF leakage (liquid leakage in the RB from recirculated suppression pool water) is calculated. It is compared to what the RB can leak to the atmosphere during the drawdown period. The difference is assumed to be released from the stack via the RBEVS even during the RB drawdown period. The results of this analysis are as follows (for input to RADTRAD and STARDOSE) for 5 time intervals ending at 30 minutes, 42 minutes, 60 minutes, 122 minutes, and 250 minutes. The midpoints are chosen at 14 minutes, 36 minutes, 50 minutes, 90 minutes, and 186 minutes:

ESF Leakage Re-evolved Iodine Treatment in RADTRAD and STARDOSE Case 1A

Based on Time Interval Midpoints

Iodine purge flow released at ground level (cfm)	Iodine purge flow released from stack filtered (cfm)	Fraction of total released at ground level	Fraction of total released from stack	Fraction of total released at ground level based on interval average
1481	0	1.00	0.00	1.00
918	495	0.65	0.35	0.63
792	1761	0.31	0.69	0.29
474	5253	0.08	0.92	0.09
252	6710	0.04	0.96	0.03

Determination of Activity Removal Rates in the Drywell and Main Steam Lines

These analyses are presented in Appendices B and C. Appendix B does the following:

- It calculates the representative droplet size to use in the spray removal calculation. This representative droplet size is taken to be the mass or volume mean diameter even though the Sauter (or "area") mean diameter may be the more appropriate single representative value. (Note that it is conservative to use the mass or volume mean rather than the Sauter mean because this mass mean

Ref.

diameter is larger). Because both primary and secondary sprays use multiple spray headers but with different flows being delivered to each header, the individual header nozzle differential pressures are different for primary and secondary sprays (see the Design Input Summary). As a result, the representative mass mean spray droplet size is different for each of the two subsystems (since droplet size is a function of nozzle differential pressure).

- It calculates a representative fall height of the spray droplets for both primary and secondary sprays.
- It calculates the volumetric flows to be used in the transfer of aerosol from the drywell to the main steam lines. There are two calculations involved: (1) the conversion of MSIV leakage limits in scfh to volumetric flows in cfh (this conversion ratio also being applicable to the other RB bypass leak paths where the leakage limit is applied in scfh) and (2) the calculation of reduction factors for volumetric containment leakage (including MSIV and other RB bypass leakage) as a function of containment pressure (for application to Case 2A wherein the containment leakage and the containment pressure are coupled).
- It calculates the mass release rates from the core to the drywell and identifies the initial aerosol size distribution.
- It calculates the time-dependent removal rate (or "lambda") of aerosol in the drywell due to drywell sprays.
- It calculates the mass leaking into the steam lines as a function of time and the associated size distribution. Using this information, it calculates aerosol removal in the steam lines between the MSIVs for those steam lines in which both steam lines are closed. It justifies and applies a DF of two for particulate at the first closed isolation valve in the main steam lines and other reactor building bypass pathways.

Appendix C then provides a discretization of the lambda transient values from Appendix B for use in Appendices D (RADTRAD dose calculations) and E (STARDOSE dose calculations).

Determination of Ultimate Elemental Iodine DF

[[

Non-proprietary version

Ref.

Non-proprietary version

Ref.

Ref.

]]

Calculation of Inhalation and Immersion Doses with RADTRAD – Case 1A

Refer to Appendix D.

Confirmation and Supporting Calculations with STARDOSE

Refer to Appendix E.

Reactor Building Shine Dose to Control Room

The RB activities and photon sources are presented in Appendix F. Appendix G provides the QADMOD analysis with confirmation provided in Appendix H.

Ref.

Plume Shine Dose to Control Room

The plume activities, photon sources, and the QADMOD analyses are presented in Appendix I. Appendix J provides a check of the sources with confirmation of the QADMOD analysis provided in Appendix K.

Control Room Filter Shine Dose to Control Room

Refer to Appendix L.

Confirmation of Early Actuation of RBEVS Based on Reactor Building Activity

These analyses (basis and confirmation) are presented in Appendices M and N.

Identification of Computer Analyses

Computer analyses are presented

(1) in the main body of the calculation (STARpH, Add Acid) to determine the pH at 24 hours with suppression pool buffering considered),

(2) in Appendix B (STARNAUA) to determine the spray and steam line sedimentation removal rates),

(3) in Appendix D (RADTRAD) to calculate the immersion doses of record for Case 1A,

(4) in Appendix E (STARDOSE) to confirm the RADTRAD results and to provide inputs for Appendices G, I, L, and M (QADMOD analyses for reactor building and plume shine, a manual calculation for shine from the control room filters, and a MicroShield analysis for the reactor building exhaust dose monitor response to confirm initiation of RBEVS)

(5) in Appendices G and I (QADMOD) for analyses of reactor building and plume shine for the control room, and

(6) in Appendix M (MicroShield) for the analysis of the reactor building exhaust dose monitor response to confirm initiation of RBEVS (confirmed in Appendix N with QADMOD)

In addition the web-based RadPro Calculator is used in Appendix H in the confirmation of the Appendix G QADMOD analysis.

Detailed Results

The limiting Case 1A results obtained with RADTRAD are as follows:

Run #	Release Pathway	30-d CR TEDE (rem)	Max 2-h EAB TEDE (rem)	30-d LPZ TEDE (rem)
1Aa	MSIV and Permanent Bypass	8.55E-01	8.61E-01	2.90E-01
1Ab	Temporary Bypass	1.77E+00	6.31E+00	9.22E-01
1Ac	Stack Release	5.11E-02	0.00E+00	1.40E-02
1Ad	ESF Temporary Bypass	5.39E-01	1.54E+00	2.84E-01
1Ae	ESF Stack Release	6.87E-01	3.09E-01	8.77E-02

Ref.

(2)	External Shine	9.10E-01	(1)	(1)
Total	All Pathways	4.81E+00	9.02E+00	1.60E+00
Limit(3)		5	25	25

(1) Not applicable for offsite dose
(2) Not calculated with RADTRAD, Total Shine is equal to 0.62rem [RB shine, Appendix G] + 0.26rem [Plume Shine, Appendix J] + 0.03rem [CR Filter Shine, Appendix L]
(3) LOCA dose limit at 30 days

Conclusions

The calculated doses meet the applicable limits of Reference 1.

Ref.

Appendix A Fraction of ESF Leakage Iodine Carrier Gas Released During Drawdown (13 Pages)

Refer to the Design Input Summary of the main body of the calculation for all inputs.

Background/Methodology

The mechanical pressure-boundary elements of systems recirculating reactor coolant/suppression pool water post-accident outside the primary containment (such as pump seals, valve stem packing, flanges, etc.) are subject to leakage. For NMP1, the design basis leakage rate is 600 gph, and this value is increased by a factor of two for purposes of the dose analysis (see Assumption 8 of the main body of the calculation). Ten percent of the radioiodine dissolved in the reactor coolant is assumed to re-evolve from the liquid and become airborne as it leaks from the ESF systems. There is a functional relationship between the iodine concentration in the liquid and that in the gas above the liquid; i.e.:

$$[I_2]_{gas} = f([I],pH,T)_{aqueous}$$

One can obtain the following expression for the mole fraction, F, of the total aqueous iodine that is in elemental form (from Reference A-1):

$$F = [I_2]/([I_2]+[I^-]) = (1 + e^{\alpha(pH)+\beta})^{-1}$$

Where $\alpha = 1.72$ and $\beta = -6.08$. Note that this is a mole concentration ratio as written, not a mass concentration ratio.

Two other ratios of importance are the partition factor, P, defined as:

$$P = [I_2]_{aqueous}/[I_2]_{gas}$$

And the overall DF, H, which is the reciprocal of the ratio of mass concentration in the gas phase (airborne elemental; i.e., $2[I_2]_{gas}$) to total iodine mass concentration in the liquid phase which is assumed to be $[I]_{aqueous} = 2[I_2]_{aqueous} + [I^-]_{aqueous}$. So:

$$H = \{[I_2]_{aqueous}+([I^-]_{aqueous})/2\}/[I_2]_{gas}$$

These three ratios may be combined to obtain H in terms of P and F; i.e.:

$$H = 0.5P(1+1/F).$$

P is also defined in Reference A-1 as:

$$Log_{10}P = 6.29-0.0149T \text{ (for T in degrees Kelvin).}$$

Therefore, using the expressions for P and F:

$$H = 10^{5.99-0.0149T}(2 + e^{1.72(pH)-6.08}).$$

For example, if T is 164.8 F (347 K, the maximum suppression pool temperature) is used in connection with a pH of 7, the value of H is 2571. This means the liquid phase mass concentration of iodine will be 2571 times the gas phase concentration of iodine at equilibrium. If the liquid phase leak rate is L in gph, then the fraction, ϕ, of incoming iodine that can be removed by an equilibrium gas flow, GF, in cfm is the iodine removed/iodine in or:

$$\phi = GF(448.8 \text{ gph/cfm})/HL$$

Solving for the gas flow:

$$GF = \phi HL/(448.8 \text{ gph/cfm}) = \phi\{10^{5.99-0.0149T}(2 + e^{1.72(pH)-6.08})\}L/(448.8 \text{ gph/cfm})$$

Ref.

For L = 1200 gph and ϕ = 10%:

$$GF = 0.267\{10^{5.99-0.0149T}(2 + e^{1.72(pH)-6.08})\}. \qquad \text{[Equation A-1]}$$

For the pH of 7/pool temperature of 347 K example, GF = 687 cfm.

While this gas flow is not excessive in a general ventilation sense, it is large relative to the outleakage of the reactor building during the drawdown period. The reactor building leakage pathway necessary to meet the leaktightness requirements of the building is given in the Design Input Summary as:

$$A/\sqrt{K} = 0.8 \text{ ft}^2$$

The 95th percentile wind speed is 22 mph. In determining the drawdown time of the reactor building, 80% of this area is assumed to be on the windward side of the building with a wind pressure coefficient, Cp, value of 0.8 (the Cp value being the multiplier for the dynamic pressure component of the total stagnation pressure). A typical pressure distribution on a prismatic building (in terms of Cp) is as follows (where the point of interest is located at zero degrees and the wind is assumed to vary around the compass):

Figure A-1 - Variation in Cp with Wind Direction

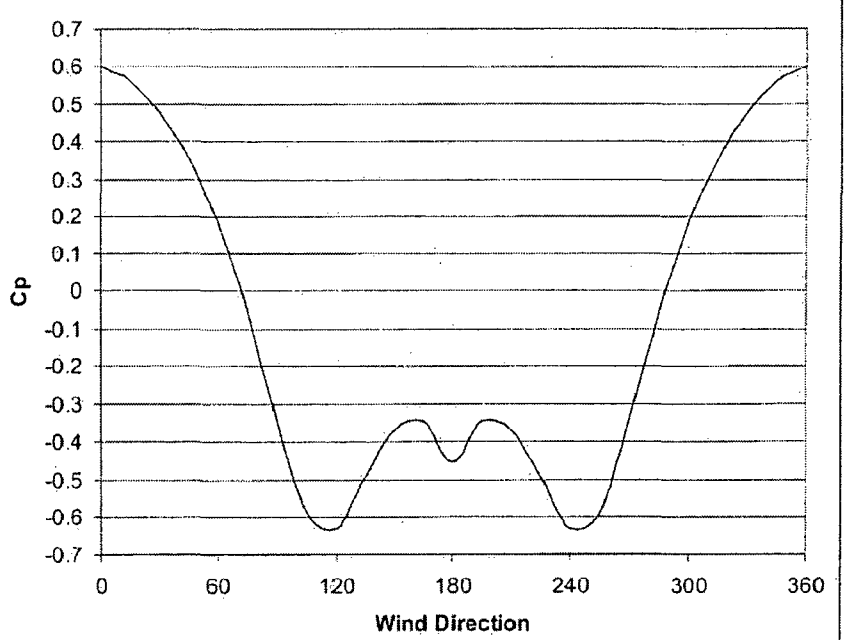

The data for this figure are taken from Table 3 of Reference A-2. Using a value of Cp = +0.8 is evidently conservative.

For a 22 mph wind, the dynamic pressure component of the total stagnation pressure is 0.00048(mph)^2 (in inches of water) where the 0.00048 is the conversion factor for (12 "/ft)(1.2E-3 specific gravity of air)[2.15 (ft/sec)^2/mph^2]/(2g). The dynamic pressure component of the total stagnation pressure is, therefore, 0.232 inches of water; and assuming a Cp value of 0.8, the pressure at the inleakage location

Ref.

on the windward side of the building would be (0.8)(0.232 inches of water) or 0.186 inches of water.

The following pressure is the maximum pressure in the reactor building during drawdown assuming single RBEVS operation (see Design Input Summary in the main body of the calculation for a reference to the data set):

Figure A-2 - Reactor Building Max Pressure

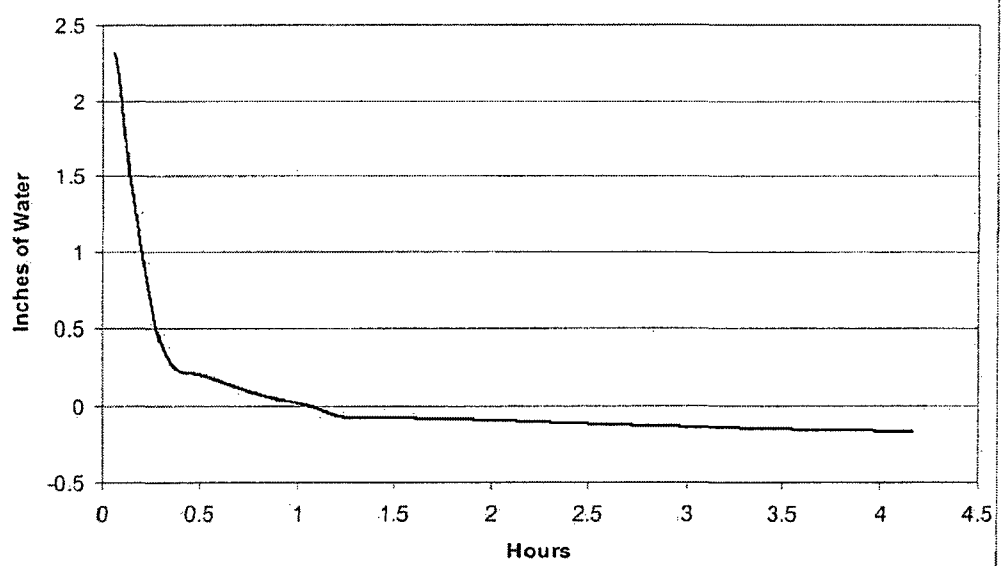

The peak reactor building pressure of 2.31 inches of water is reached in 205 seconds after the LOCA and concurrent LOOP. Since the activity release does not begin for two minutes, it is conservative (but not excessively so) to assume that the peak pressure exists from t = 0 until 205 seconds.

Using the pressure transient in the reactor building as shown in Figure A-2, one may calculate the potential outleakage during drawdown. Note that in calculating this internal pressure, 80% of the leakage area was assumed to be at the point of maximum pressure on the windward side of the building (this maximum pressure being determined by the assumed Cp = +0.8). If this assumption were applied consistently, only 20% of the leakage area would be available for outleakage. However, for conservatism, outleakage is calculated on the basis of 50% of the leakage area being at a point on the leeward side of the reactor building where the Cp is conservatively assumed to be -0.7. For the 95th percentile wind speed of 22 mph, the corresponding pressure is -0.162 inches of water. Note that this pressure is reached at 250 minutes (4.167 hours) which is the point where the curve of Figure A-2 is truncated. Note also that the drawdown time of 298 minutes is a conservative interpretation of a drawdown analysis performed for zero wind speed but with a conservative acceptance criterion for establishing secondary containment of the maximum pressure being no greater than -0.25 inches of water (used in Reference A-3 as the basis for the 298 minute drawdown time).

Once the outleakage is known, it may be compared to the GF calculated from the expression given

Ref.

above as a function of pH and T (Equation A-1).

The suppression pool pH is as follows (refer to Design Input Summary):

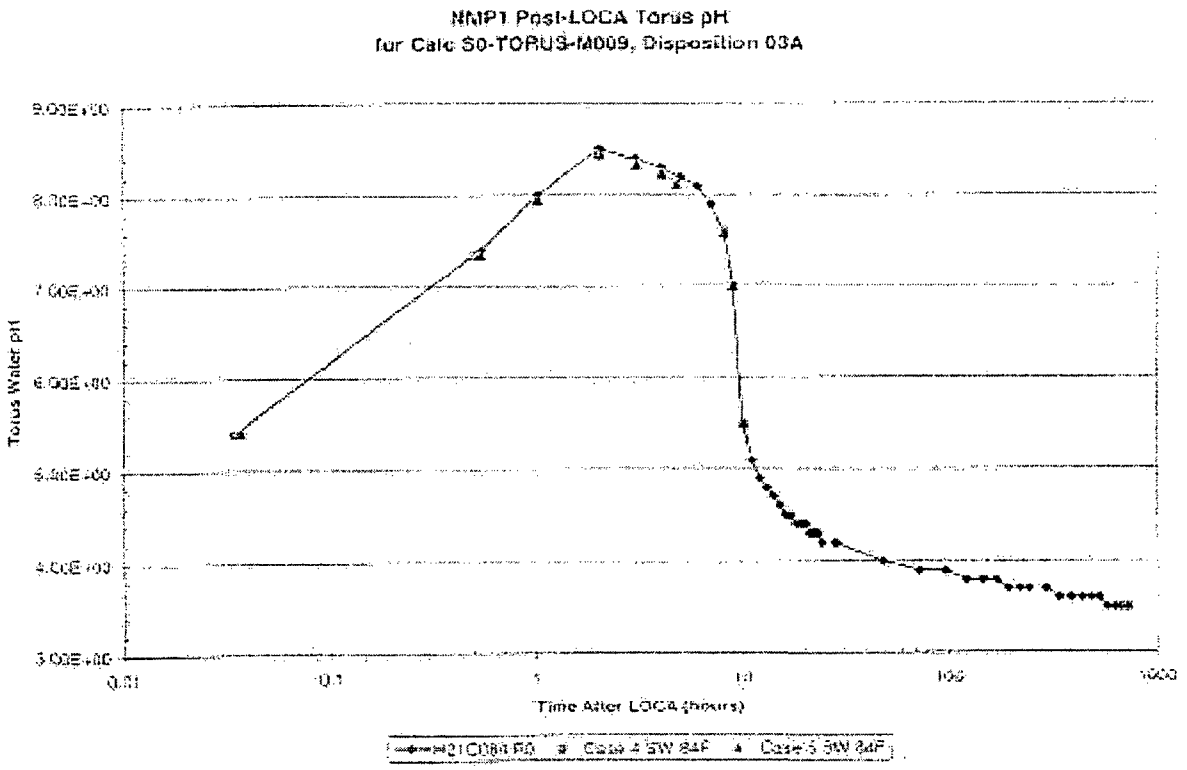

Note that these data are for suppression pool pH prior to introduction of sodium pentaborate, with the increase in pH being due to fission product cesium compounds introduced concurrently with the release of iodine. Because the vapor pressures of fission product cesium and fission product iodine are similar, the release from the core is expected to be nearly simultaneous. The same data in tablular form spanning the period of interest (i.e., up to 4.167 hours or 15000 seconds) are as follows:

Time (sec)	pH
132	5.4
1898	7.3
3641	7.9
7157	8.4
7383	8.4
10922	8.3
14448	8.2
17288	8.1

The ratio of the volumetric flow that is able to leak from the reactor building during drawdown to the total volumetric flow is the fraction of the ESF leakage iodine re-evolution during drawdown that can be leaked from the reactor building at ground level. The remainder is assumed to be released with the RBEVS exhaust flow (filtered and to the stack), but with no holdup in the reactor building.

Ref.

Calculation

An Excel spreadsheet is used to make the calculation. The calculation is made with two-minute time-steps. The following constants (as discussed above) are shown at the top of the spreadsheet:

Suppression pool temperature T (for the calculation of H) = 164.5 F = 347 K

Alpha (for the calculation of H) = 1.72

Beta (for the calculation of H) = -6.08

ESF leakage = 1200 gph = 2.67 cfm

ESF leakage iodine re-evolution fraction = 0.1

95th percentile wind speed = 22 mph

Leeward side Cp = -0.7

Minimum pressure on reactor building exterior = $(0.00048)Cp(mph)^2$ = 0.162 inches of water

Conversion of inches of water to psi = 0.036 psi/inch of water

$A/\sqrt{K} = 0.8\ ft^2$

Fraction of $A/\sqrt{K}$ on leeward side of reactor building = 0.5

In the first column is the time (in minutes). In the second column is the reactor building pressure in inches of water. Note that it is calculated using three curve fits (where "x" is the time in hours and "y" is the inches of water):

<u>First time frame from t = 2 minutes to t = 28 minutes</u>

MMF Model: y=(a*b+c*x^d)/(b+x^d)

Coefficient Data:

a = 2.37081

b = 0.002501

c = 0.13783

d = 3.356376

<u>Second time frame from t = 30 minutes to t = 72 minutes</u>

MMF Model: y=(a*b+c*x^d)/(b+x^d)

Coefficient Data:

a = -0.39996

b = 0.56122

c = 0.249619

d = 2.61779

<u>Third time frame from t = 74 minutes to t = 250 minutes</u>

Sinusoidal Fit: y=a+b*cos(cx+d)

Coefficient Data:

a = -0.11414

b = 0.04868

Ref.

c = 0.903956

d = -0.72094

The comparison of the three expressions to the actual data is shown on the following Figure A-3:

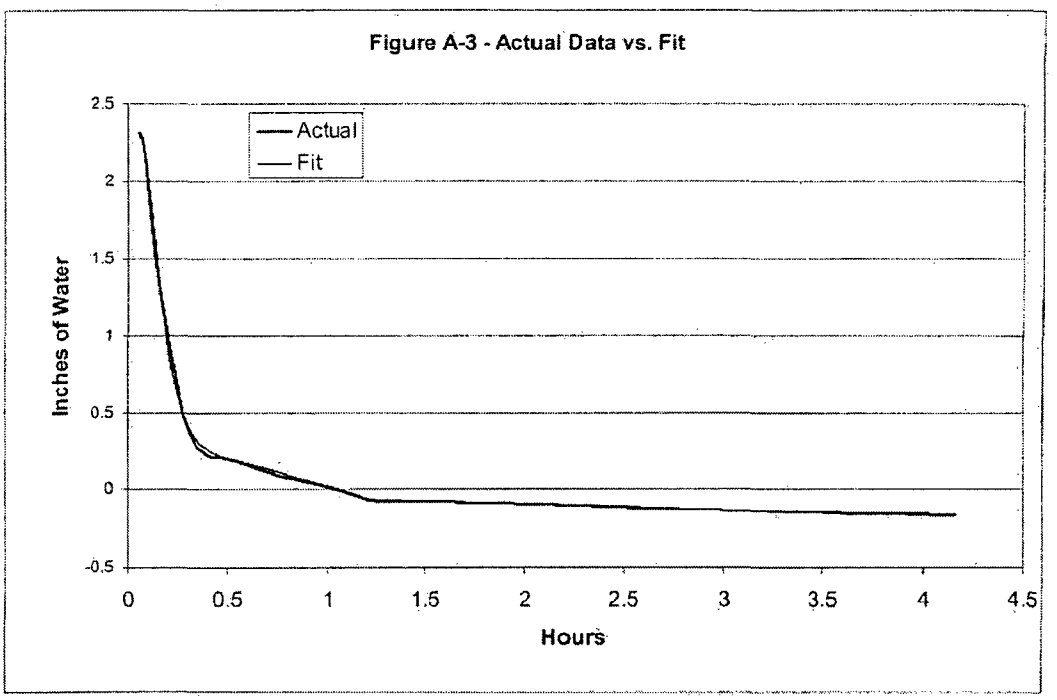

In the third column, the differential between the pressure shown above and the minimum pressure on the exterior of the reactor building for a 22 mph wind (-0.162 inches of water) is calculated. This differential pressure is converted to psi in Column 4 by multiplying Column 3 by 0.036.

In the fifth column, the volumetric flowrate out of the building, Q_{out}, due to the available leakage area and the maximum available differential pressure is calculated from the classical expression for low Mach number (incompressible) flow:

$Q_{out} = (A/\sqrt{K})(\sqrt{2g_c 144\Delta p/\rho})$ (from e.g., Equation 6.98 from Reference A-4 for $Q_{out} = AV$)

Where g_c is 32.2 lbm-ft/lbf-sec^2, 144 is in^2/ft^2, Δp is the maximum value in psi (Column 4), ρ is assumed to be at standard conditions (0.075 lbm/ft^3), and $A/\sqrt{K}$ is 50% of the value given in the Background/Methodology section of this appendix (in ft^2). Note that the result is multiplied by 60 to obtain cfm.

In the sixth column, the pH is given. It is based on the following curve fit (for x = time in minutes and y = pH):

Rational Function: y=(a+bx)/(1+cx+dx^2)

Coefficient Data:

a = 5.15E+00

Ref.

b = 0.254658

c = 0.025184

d = 1.75E-05

The comparison of this curve fit to the actual data is as follows:

Time (sec)	pH (actual)	pH (fit)
132	5.4	5.407
1898	7.3	7.277
3641	7.9	7.945
7157	8.4	8.351
7383	8.4	8.359
10922	8.3	8.353
14448	8.2	8.225
17288	8.1	8.085

In the seventh column, the GF is calculated according to the expression (Equation A-1):

$$GF = 0.267\{10^{5.99-0.0149T}(2 + e^{1.72(pH)-6.08})\}$$

Where the constant 0.267 is the product of the ESF leakage in cfm and the iodine re-evolution fraction of 0.1. The GF value calculated with this expression is the volumetric flow of gas that is needed to purge the 10% iodine re-evolution from the reactor building.

To the extent that this purge value exceeds the Q_{out} value in Column 5, the difference must either remain in the reactor building or be exhausted by the ventilation system. It will be assumed that prior to the end of drawdown, all of the re-evolved iodine will escape the reactor building instantaneously. Therefore, the fraction of the GF that cannot leak through the 50% of the leak area at negative pressure is assumed to be released (filtered) as part of the ventilation exhaust flow. Note that this is conservatively non-physical; in reality, the fraction of this iodine purge flow that cannot leak or be exhausted from the building would remain in the reactor building where it would either plate out or remain airborne, thus retarding further iodine re-evolution from the ESF leakage stream.

The ratio of the outleakage to the iodine purge flow (GF) is given in Column 8. If this ratio is greater than unity, then it is possible that all of the ESF leakage iodine release could escape the building unfiltered as part of the outleakage. Once this ratio becomes less than unity, however, this ratio determines the fraction of the re-evolved iodine that can bypass the RBEVS filters as reactor building outleakage. This is because it is only this fraction of GF that can also be Q_{out}.

Columns 9 and 10 present the points that will be used in the dose analysis for the portion of GF that is released at ground level and the portion that is filtered and released via the stack, respectively. Points are selected to be the midpoints of certain intervals. The first interval ends with the ratio in Column 8 becomes less than unity. The next interval ends when the ratio becomes less than 0.5, then 0.2, 0.06, and then finally, the point where the outleakage becomes zero (250 minutes or 4.167 hours). Therefore, there are 5 points for intervals ending at 30 minutes, 42 minutes, 60 minutes, 122 minutes, and 250 minutes. The midpoints are chosen at 14 minutes, 36 minutes, 50 minutes, 90 minutes, and 186 minutes. In Column 9, the Column 5 value at 14 minutes is shown opposite 30 minutes, the Column 5 value at 36 minutes is shown opposite 42 minutes, the Column 5 value at 50 minutes is shown opposite 60 minutes, the Column 5 value at 90 minutes is shown opposite 122 minutes, and the Column 5 value at 186 minutes is shown opposite 250 minutes. In Column 10, the difference between the Column 5/9 value

Ref.

and its corresponding Column 7 value (but not less than zero) is presented. This is the "excess" iodine-bearing gas flow that is assumed to be released via the RBEVS (i.e., that which is too great to be leaked). Note that for the first interval (in which the Column 8 value is greater than unity), the Column 10 value is zero. For the first 30 minutes, because of low pH and high reactor building pressure and outleakage, all of the re-evolved iodine is able to leak from the reactor building. In Columns 11 and 12, the fractional releases based on Columns 9 and 10 are presented.

Summary

The data to be used in the dose analysis is as follows:

Based on Interval Midpoints				
Iodine purge flow released at ground level (cfm)	Iodine purge flow released from stack filtered (cfm)	Fraction of total released at ground level	Fraction of total released from stack	Fraction of total released at ground level based on interval average
1481	0	1.00	0.00	1.00
918	495	0.65	0.35	0.63
792	1761	0.31	0.69	0.29
474	5253	0.08	0.92	0.09
252	6710	0.04	0.96	0.03

NUREG/CR-5732
T = 164.5 F = 346.9444 K
Alpha = 1.72
Beta = -6.08

ESF leakage = 1200 gph = 2.6737968 cfm
ESF frac = 0.1

Wind = 22 mph
Leeward side Cp = -0.7
Min pressure = -0.162824
Conversion of inches of water to psi = 0.036 psi/ inch of water

A/sqrtK = 0.8 ft2
Fraction of A on lee = 0.5

Column 1 t (minutes)	Column 2 RB "wg	Column 3 RB diff "wg	Column 4 RB diff psi	Column 5 Qout (cfm)	Column 6 pH	Column 7 GF (cfm)	Column 8 ratio Qout/GF	Column 9 cfm at ground	Column 10 cfm to stack	Column 11 fraction to ground	Column 12 fraction to stack
2	2.361012	2.523636	0.090851	2543.7207	5.38E+00	4.61E+01	55.16523				
4	2.274377	2.437001	0.087732	2499.6767	5.60E+00	6.52E+01	38.34662				
6	2.036602	2.199226	0.079172	2374.6029	5.80E+00	8.98E+01	26.4293				
8	1.664906	1.827530	0.065791	2164.6531	5.97E+00	1.21E+02	17.91178				
10	1.266979	1.429603	0.051466	1914.537	6.14E+00	1.59E+02	12.04581				
12	0.934566	1.097190	0.039499	1677.2471	6.29E+00	2.05E+02	8.199709				
14	0.692716	0.855340	0.030792	1480.8993	6.42E+00	2.58E+02	5.732407				
16	0.527238	0.689862	0.024835	1329.9558	6.55E+00	3.21E+02	4.147945				
18	0.415917	0.578541	0.020827	1217.9322	6.67E+00	3.92E+02	3.109471				
20	0.340606	0.503230	0.018116	1135.8985	6.78E+00	4.72E+02	2.408396				
22	0.288846	0.451470	0.016253	1075.8959	6.88E+00	5.61E+02	1.919456				
24	0.252564	0.415188	0.014947	1031.7592	6.97E+00	6.58E+02	1.567461				
26	0.226608	0.389232	0.014012	998.98817	7.06E+00	7.65E+02	1.306561				
28	0.207669	0.370293	0.013331	974.38143	7.14E+00	8.79E+02	1.10812				
30	0.195203	0.357827	0.012882	957.83872	7.22E+00	1.00E+03	0.955907	1481	0	1	0
32	0.186165	0.348789	0.012556	945.66548	7.29E+00	1.13E+03	0.835181				
34	0.176481	0.339105	0.012208	932.44413	7.36E+00	1.27E+03	0.734429				
36	0.166192	0.328816	0.011837	918.18961	7.42E+00	1.41E+03	0.649598				
38	0.155348	0.317972	0.011447	902.92264	7.48E+00	1.56E+03	0.577585				
40	0.144003	0.306627	0.011039	886.66885	7.53E+00	1.72E+03	0.515983				
42	0.132215	0.294839	0.010614	869.45787	7.58E+00	1.88E+03	0.462906	918	495	0.649598	0.350402
44	0.120044	0.282668	0.010176	851.32227	7.63E+00	2.04E+03	0.416865				
46	0.107550	0.270174	0.009726	832.29649	7.68E+00	2.21E+03	0.376675				

48	0.094797	0.257421	0.009267	812.41579	7.72E+00	2.38E+03	0.341379					
50	0.081846	0.244470	0.008801	791.71506	7.76E+00	2.55E+03	0.310205					
52	0.068756	0.231380	0.00833	770.22769	7.80E+00	2.73E+03	0.282532					
54	0.055585	0.218209	0.007856	747.98438	7.84E+00	2.90E+03	0.257809					
56	0.042388	0.205012	0.00738	725.01196	7.87E+00	3.08E+03	0.235636					
58	0.029214	0.191838	0.006906	701.33205	7.90E+00	3.25E+03	0.215643					
60	0.016113	0.178737	0.006435	676.95972	7.94E+00	3.43E+03	0.197529	792	1761	0.310205	0.689795	
62	0.003126	0.165750	0.005967	651.90194	7.96E+00	3.60E+03	0.181036					
64	-0.009708	0.152916	0.005505	626.15575	7.99E+00	3.77E+03	0.165945					
66	-0.022354	0.140270	0.00505	599.70609	8.02E+00	3.94E+03	0.152068					
68	-0.034782	0.127842	0.004602	572.52293	8.04E+00	4.11E+03	0.139241					
70	-0.046966	0.115658	0.004164	544.5575	8.06E+00	4.28E+03	0.127317					
72	-0.058884	0.103740	0.003735	515.73711	8.09E+00	4.44E+03	0.116167					
74	-0.069193	0.093431	0.003364	489.44206	8.11E+00	4.60E+03	0.106429					
76	-0.069776	0.092848	0.003343	487.91176	8.13E+00	4.75E+03	0.102624					
78	-0.070400	0.092224	0.00332	486.27047	8.14E+00	4.91E+03	0.099114					
80	-0.071063	0.091561	0.003296	484.51856	8.16E+00	5.05E+03	0.095859					
82	-0.071766	0.090858	0.003271	482.65641	8.18E+00	5.20E+03	0.092862					
84	-0.072507	0.090117	0.003244	480.68446	8.19E+00	5.34E+03	0.09007					
86	-0.073285	0.089339	0.003216	478.60313	8.21E+00	5.47E+03	0.087471					
88	-0.074101	0.088523	0.003187	476.41291	8.22E+00	5.60E+03	0.085048					
90	-0.074953	0.087671	0.003156	474.11429	8.23E+00	5.73E+03	0.082784					
92	-0.075841	0.086783	0.003124	471.70778	8.25E+00	5.85E+03	0.080664					
94	-0.076764	0.085860	0.003091	469.19393	8.26E+00	5.96E+03	0.078676					
96	-0.077720	0.084904	0.003057	466.5733	8.27E+00	6.07E+03	0.076808					
98	-0.078710	0.083914	0.003021	463.84648	8.28E+00	6.18E+03	0.075049					
100	-0.079731	0.082893	0.002984	461.01409	8.29E+00	6.28E+03	0.07339					
102	-0.080784	0.081840	0.002946	458.07676	8.30E+00	6.38E+03	0.071822					
104	-0.081867	0.080757	0.002907	455.03515	8.30E+00	6.47E+03	0.070338					
106	-0.082980	0.079644	0.002867	451.88996	8.31E+00	6.56E+03	0.068931					
108	-0.084121	0.078503	0.002826	448.64188	8.32E+00	6.64E+03	0.067595					
110	-0.085289	0.077335	0.002784	445.29165	8.33E+00	6.71E+03	0.066322					
112	-0.086483	0.076141	0.002741	441.84001	8.33E+00	6.79E+03	0.065109					
114	-0.087702	0.074922	0.002697	438.28776	8.34E+00	6.85E+03	0.06395					
116	-0.088946	0.073678	0.002652	434.63567	8.34E+00	6.92E+03	0.062842					
118	-0.090212	0.072412	0.002607	430.88458	8.35E+00	6.97E+03	0.061779					
120	-0.091500	0.071124	0.00256	427.03533	8.35E+00	7.03E+03	0.060758					

122	-0.092809	0.069815	0.002513	423.08878	8.36E+00	7.08E+03	0.059775	474	5253	0.082784	0.917216
124	-0.094137	0.068487	0.002466	419.04581	8.36E+00	7.12E+03	0.058828				
126	-0.095483	0.067141	0.002417	414.90733	8.36E+00	7.16E+03	0.057913				
128	-0.096846	0.065778	0.002368	410.67427	8.37E+00	7.20E+03	0.057028				
130	-0.098224	0.064400	0.002318	406.34758	8.37E+00	7.23E+03	0.056169				
132	-0.099618	0.063006	0.002268	401.92822	8.37E+00	7.26E+03	0.055335				
134	-0.101024	0.061600	0.002218	397.41719	8.37E+00	7.29E+03	0.054524				
136	-0.102442	0.060182	0.002167	392.81548	8.38E+00	7.31E+03	0.053732				
138	-0.103871	0.058753	0.002115	388.12414	8.38E+00	7.33E+03	0.052959				
140	-0.105309	0.057315	0.002063	383.34421	8.38E+00	7.34E+03	0.052202				
142	-0.106756	0.055868	0.002011	378.47675	8.38E+00	7.35E+03	0.05146				
144	-0.108209	0.054415	0.001959	373.52285	8.38E+00	7.36E+03	0.05073				
146	-0.109667	0.052957	0.001906	368.48362	8.38E+00	7.37E+03	0.050012				
148	-0.111129	0.051495	0.001854	363.36016	8.38E+00	7.37E+03	0.049304				
150	-0.112594	0.050030	0.001801	358.15362	8.38E+00	7.37E+03	0.048603				
152	-0.114061	0.048563	0.001748	352.86516	8.38E+00	7.37E+03	0.04791				
154	-0.115528	0.047096	0.001695	347.49595	8.38E+00	7.36E+03	0.047223				
156	-0.116993	0.045631	0.001643	342.04717	8.38E+00	7.35E+03	0.046541				
158	-0.118456	0.044168	0.00159	336.52003	8.38E+00	7.34E+03	0.045861				
160	-0.119915	0.042709	0.001538	330.91574	8.38E+00	7.32E+03	0.045184				
162	-0.121368	0.041256	0.001485	325.23554	8.38E+00	7.31E+03	0.044508				
164	-0.122815	0.039809	0.001433	319.48067	8.37E+00	7.29E+03	0.043833				
166	-0.124255	0.038369	0.001381	313.65241	8.37E+00	7.27E+03	0.043156				
168	-0.125685	0.036939	0.00133	307.752	8.37E+00	7.25E+03	0.042478				
170	-0.127104	0.035520	0.001279	301.78075	8.37E+00	7.22E+03	0.041796				
172	-0.128512	0.034112	0.001228	295.73995	8.37E+00	7.19E+03	0.041112				
174	-0.129907	0.032717	0.001178	289.63089	8.36E+00	7.17E+03	0.040422				
176	-0.131287	0.031337	0.001128	283.4549	8.36E+00	7.13E+03	0.039727				
178	-0.132652	0.029972	0.001079	277.2133	8.36E+00	7.10E+03	0.039026				
180	-0.134000	0.028624	0.00103	270.90741	8.36E+00	7.07E+03	0.038318				
182	-0.135330	0.027294	0.000983	264.53857	8.35E+00	7.04E+03	0.037603				
184	-0.136641	0.025983	0.000935	258.10812	8.35E+00	7.00E+03	0.036878				
186	-0.137931	0.024693	0.000889	251.6174	8.35E+00	6.96E+03	0.036145				
188	-0.139200	0.023424	0.000843	245.06774	8.34E+00	6.92E+03	0.035401				
190	-0.140446	0.022178	0.000798	238.46048	8.34E+00	6.88E+03	0.034646				
192	-0.141668	0.020956	0.000754	231.79686	8.34E+00	6.84E+03	0.03388				
194	-0.142865	0.019759	0.000711	225.07849	8.33E+00	6.80E+03	0.033102				

196	-0.144037	0.018587	0.000669	216.30638	8.33E+00	6.76E+03	0.032311				
198	-0.145180	0.017444	0.000628	211.48194	8.33E+00	6.71E+03	0.031506				
200	-0.146296	0.016328	0.000588	204.60641	8.32E+00	6.67E+03	0.030687				
202	-0.147383	0.015241	0.000549	197.68103	8.32E+00	6.62E+03	0.029853				
204	-0.148439	0.014185	0.000511	190.70708	8.31E+00	6.58E+03	0.029003				
206	-0.149465	0.013159	0.000474	183.68561	8.31E+00	6.53E+03	0.028137				
208	-0.150458	0.012166	0.000438	176.61777	8.31E+00	6.48E+03	0.027254				
210	-0.151418	0.011206	0.000403	169.50456	8.30E+00	6.43E+03	0.026353				
212	-0.152344	0.010280	0.00037	162.34691	8.30E+00	6.38E+03	0.025434				
214	-0.153236	0.009388	0.000338	155.14561	8.29E+00	6.33E+03	0.024496				
216	-0.154092	0.008532	0.000307	147.90132	8.29E+00	6.28E+03	0.023538				
218	-0.154912	0.007712	0.000278	140.61445	8.28E+00	6.23E+03	0.022559				
220	-0.155695	0.006929	0.000249	133.28521	8.28E+00	6.18E+03	0.021559				
222	-0.156441	0.006183	0.000223	125.91342	8.27E+00	6.13E+03	0.020536				
224	-0.157147	0.005477	0.000197	118.45846	8.27E+00	6.08E+03	0.01949				
226	-0.157815	0.004809	0.000173	111.03909	8.26E+00	6.03E+03	0.01842				
228	-0.158443	0.004181	0.000151	103.53322	8.26E+00	5.98E+03	0.017324				
230	-0.159031	0.003593	0.000129	95.977565	8.25E+00	5.92E+03	0.016201				
232	-0.159578	0.003046	0.00011	88.367089	8.25E+00	5.87E+03	0.015049				
234	-0.160084	0.002540	9.14E-05	80.694175	8.24E+00	5.82E+03	0.013866				
236	-0.160549	0.002075	7.47E-05	72.947196	8.24E+00	5.77E+03	0.012649				
238	-0.160971	0.001653	5.95E-05	65.108012	8.23E+00	5.71E+03	0.011394				
240	-0.161350	0.001274	4.59E-05	57.147285	8.23E+00	5.66E+03	0.010094				
242	-0.161687	0.000937	3.37E-05	49.01483	8.22E+00	5.61E+03	0.008739				
244	-0.161981	0.000643	2.32E-05	40.617265	8.22E+00	5.56E+03	0.00731				
246	-0.162231	0.000393	1.42E-05	31.755611	8.21E+00	5.50E+03	0.00577				
248	-0.162437	0.000187	6.73E-06	21.886258	8.21E+00	5.45E+03	0.004015				
250	-0.162600	0.000024	8.71E-07	7.8746623	8.20E+00	5.40E+03	0.001459	252	6710	0.036145	0.963855

Ref.

References

A-1 NUREG/CR-5732, "Iodine Chemical Forms in LWR Severe Accidents"

A-2 Persily, A.K. and Ivy, E. M., "Input Data for Multizone Airflow and IAQ Analysis", NISTIR 6585, January 2001

A-3 Calculation S0-GOTHIC-DD01

A-4 *Fluid Mechanics*, White, Frank M., WCB-McGraw-Hill, Boston, 4th Edition, 1999

Ref.

Appendix B Calculation of Drywell and Main Steam Line Lambdas (138 Pages) [Proprietary]

[[Proprietary information deleted

Ref.

Appendix C Representative Lambdas Based on STARNAUA (10 Pages)

Background/Methodology

A spreadsheet methodology was used to find representative spray lambdas for use in the drywell and steam line activity removal from the information provided in Appendix B of this calculation.

Calculation

Three cases were run using in Appendix B. These cases were as follows:

- Case 1A: Core Spray, Division Electrical Failure (secondary spray)
- Case 2A: No Core Spray, Division Electrical Failure (secondary spray)
- Case 1B: Core Spray, MSIV Failure (primary spray)

The Appendix B output Lambda values and time in seconds were imported into an excel spreadsheet. By calculating the rate of change of the lambda value over time ($\Delta\lambda / \Delta t$) it can be seen where lambda changes uniformly. Representative lambda values were chosen to most closely model the lambda curve generated by the output values.

Each case was handled in the same manner, using an excel spreadsheet. For illustrative purposes, a blank table has been provided as a template.

Table C-1 has the following format by column:

1. Time in seconds (From .plt file in Appendix B)
2. Time in hours (Column 1 divided by 3600 seconds in one hour)
3. Time plus two minutes (Column 2 plus 0.0333 (2min/60min in an hour)). In the STARDOSE [Ref C-1] computer code, t=0 is the time of the accident. In Appendix B and RADTRAD [Ref C-2] computer codes t=0 refers to the time of release. For that reason 2 minutes is added to the Appendix B time when calculating inputs for the STARDOSE computer code.
4. Noble Gas Lambda (Noble gases are not removed by sprays, this value equals zero for all cases)
5. Elemental Iodine Lambda (Values determined by the STARNAUA computer code, this value is capped at 20 for Drywell (DW) Lambdas [Ref C-3] , and credit is not taken for main steam line lambdas*).
6. Organic Iodine Lambda (Credit is not taken for the removal of organic iodine per Assumption 6 of the Main Body).
7. Particulate Iodine Lambda (Determined by Appendix B)**
8. Solubles (Determined by Appendix B)**
9. Insolubles (Determined by Appendix B)**

*A DF of 2 is used in the Steam Line analysis. For this reason, no credit is taken for the removal of elemental Iodine downstream.

** Values are equal per Reference C-3.

Ref.

Table C-1: Template for Lambda Determination

Column No.	1	2	3	4	5	6	7	8	9
	(Case Number) Title								
	Time(sec)	Time (hr)	Time+2min	NobleGas	Elemlodine	Orglodine	Partlodine	Solubles	Insolubles

The RADTRAD Inputs of time (h), Aerosol, Elemental I, and Organic I are taken from columns 2, 7, 5 and 6 respectively.

The area without shading is used in the STARDOSE input file where applicable.

The charts and graphs below are the calculated representative lambdas to be used in the dose analysis computer codes of this calculation, as well as graphs of the calculated values plotted next to the data from Appendix B. The information is presented in the following order:

CASE 1A: Core Spray, Division Electrical Failure (DW)
CASE 1A: Core Spray, Division Electrical Failure (MSL)
CASE 2A: No Core Spray, Division Electrical Failure (DW)
CASE 2A: No Core Spray, Division Electrical Failure (MSL)
CASE 1B: Core Spray, MSIV Failure (DW)
CASE 1B: Core Spray, MSIV Failure (MSL)

Project: Nine Mile Point Nuclear Station Unit: __1__ Disposition: ____

Originator/Date	Reviewer/Date	Calculation No.	Revision
H. Pustulka 12/12/06	D. Leaver 12/12/06	H21C092	00

Ref.

CASE 1A: Core Spray, Division Electrical Failure (DW)

Case 1A: DW, core & sec. cont. sprays on

Time(sec)	Time (hr)	Time+2min	NobleGas	ElemIodine	OrgIodine	PartIodine	Solubles	Insolubles
111.23	0.03090	0.064	0	20.000	0	52.895	52.895	52.895
1786.8	0.49633	0.530	0	19.125	0	19.125	19.125	19.125
1885	0.52360	0.557	0	20.000	0	31.616	31.616	31.616
2881.2	0.80032	0.834	0	20.000	0	22.682	22.682	22.682
7145.3	1.98480	2.018	0	19.849	0	19.849	19.849	19.849
9816.6	2.72683	2.760	0	4.936	0	4.936	4.936	4.936
15410	4.28054	4.314	0	2.975	0	2.975	2.975	2.975
53964	14.9901	15.023	0	2.010	0	2.010	2.010	2.010
3E+06	720	720	0	0.000	0	0.000	0.000	0.000

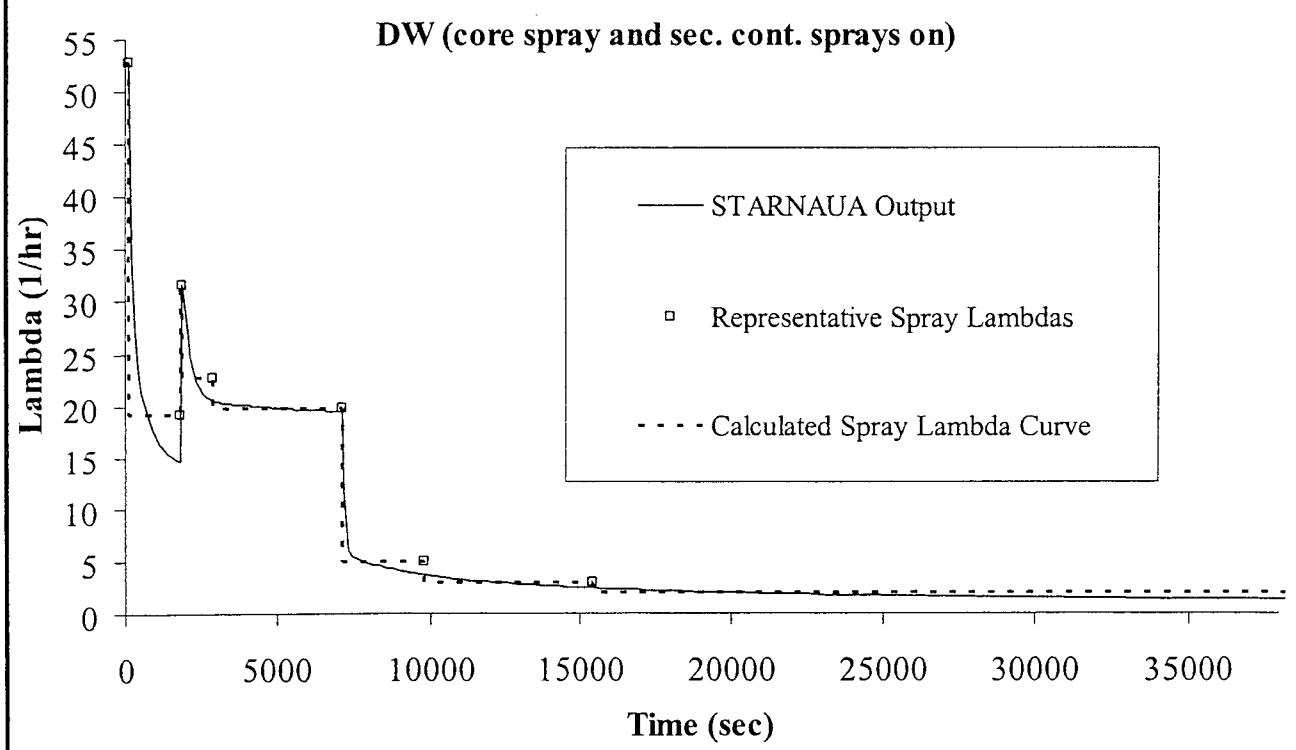

Project: Nine Mile Point Nuclear Station Unit: __1__ Disposition: ____

Originator/Date	Reviewer/Date	Calculation No.	Revision
H. Pustulka 12/12/06	D. Leaver 12/12/06	H21C092	00

Ref.

CASE 1A: Core Spray, Division Electrical Failure (MSL)[1]

Case 1A: 50 scfh MSL, core & sec. cont. sprays on

Time(sec)	Time (hr)	Time+2min	NobleGas	Elemlodine	Orglodine	Partlodine	Solubles	Insolubles
36.76	0.01021	0.044	0	0.000	0	1.354	1.354	1.354
934.54	0.25959	0.293	0	0.000	0	1.246	1.246	1.246
1904.3	0.52896	0.562	0	0.000	0	0.860	0.860	0.860
4240	1.17777	1.211	0	0.000	0	0.752	0.752	0.752
7958.8	2.21078	2.244	0	0.000	0	0.777	0.777	0.777
17827	4.9520	4.985	0	0.000	0	0.691	0.691	0.691
28781	7.9948	8.028	0	0.000	0	0.498	0.498	0.498
86571	24.0474	24.081	0	0.000	0	0.317	0.317	0.317
3E+06	720	720	0	0.000	0	0.000	0.000	0.000

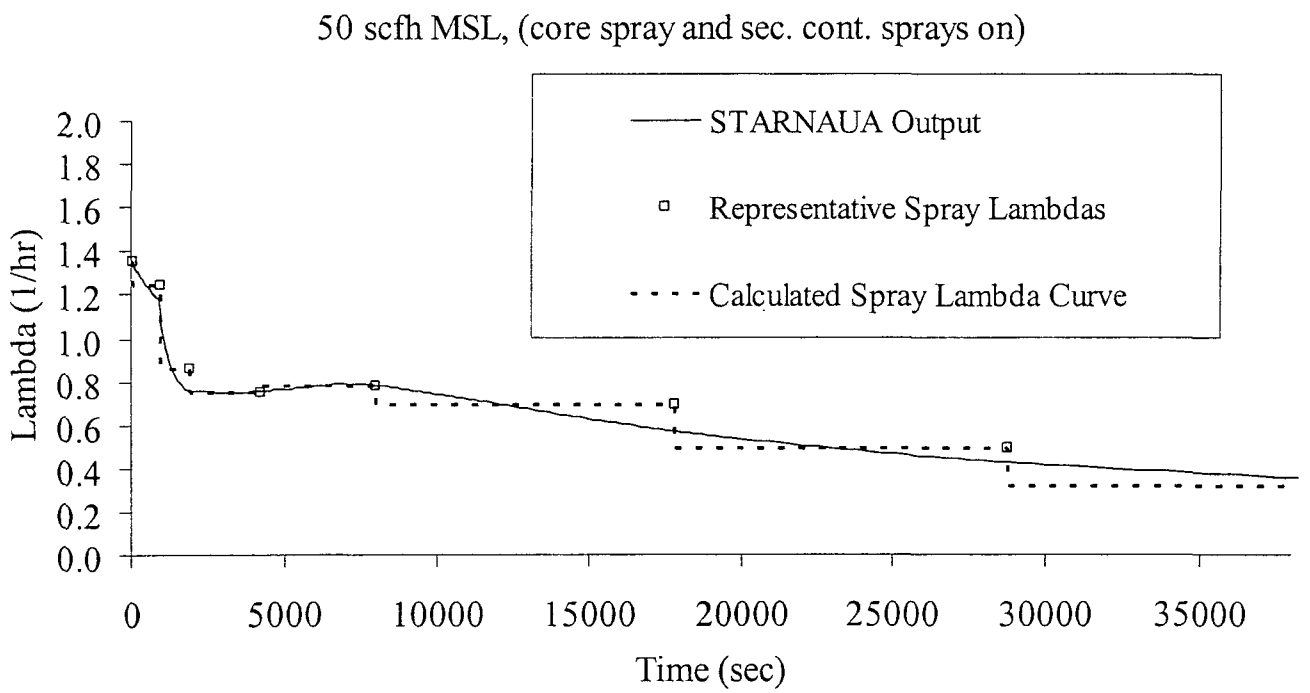

[1] Preliminary results, see Appendix C-1 for further detail

Project: Nine Mile Point Nuclear Station Unit: __1__ Disposition: ____

Originator/Date	Reviewer/Date	Calculation No.	Revision
H. Pustulka 12/12/06	D. Leaver 12/12/06	H21C092	00

Ref.

CASE 2A: No Core Spray, Division Electrical Failure (DW)

Case 2A: DW, (no core spray, sec. cont. sprays on)

Time(sec)	Time (hr)	Time+2min	NobleGas	ElemIodine	OrgIodine	PartIodine	Solubles	Insolubles
111.29	0.03091	0.064	0	20.000	0	44.454	44.454	44.454
1784.9	0.49582	0.529	0	18.932	0	18.932	18.932	18.932
1879.5	0.52209	0.555	0	20.000	0	27.189	27.189	27.189
3236.7	0.89909	0.932	0	19.258	0	19.258	19.258	19.258
7147.6	1.98545	2.019	0	16.487	0	16.487	16.487	16.487
11520	3.20001	3.233	0	4.427	0	4.427	4.427	4.427
17266	4.79600	4.829	0	2.718	0	2.718	2.718	2.718
56770	15.7695	15.803	0	1.950	0	1.950	1.950	1.950
3E+06	720	720	0	0.000	0	0.000	0.000	0.000

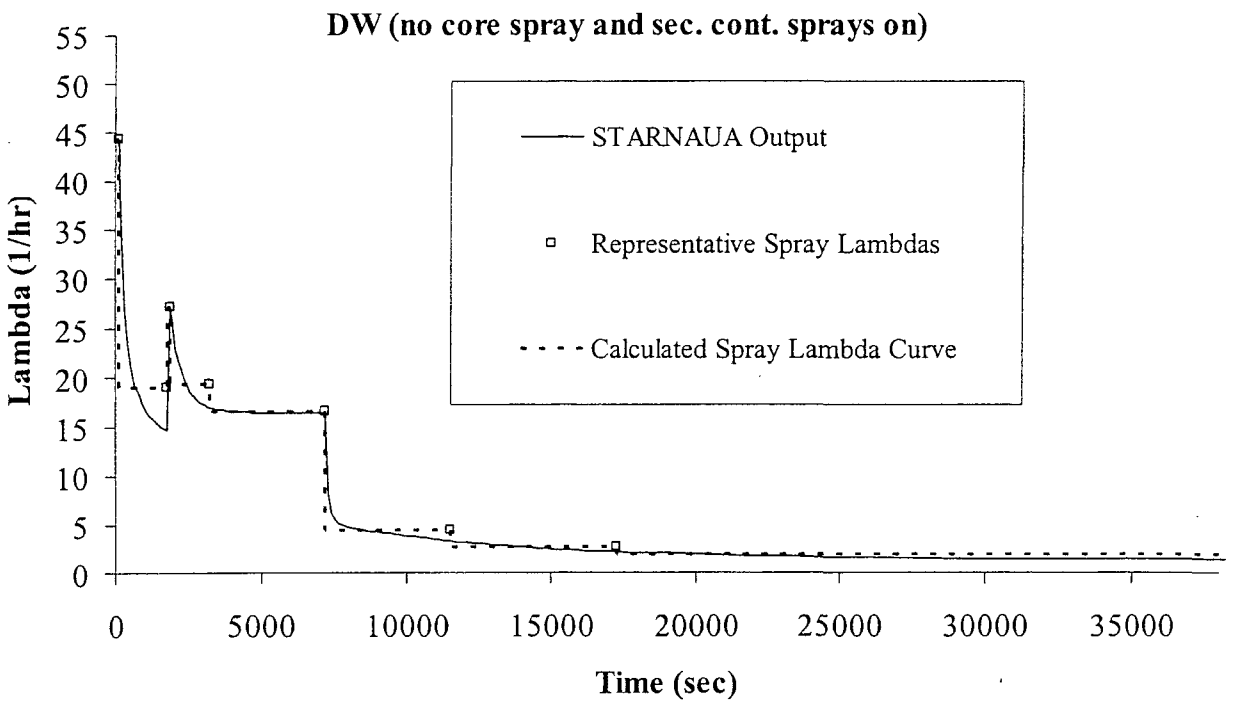

Project: Nine Mile Point Nuclear Station Unit: __1__ Disposition: ____

Originator/Date	Reviewer/Date	Calculation No.	Revision
H. Pustulka 12/12/06	D. Leaver 12/12/06	H21C092	00

Ref.

CASE 2A: No Core Spray, Division Electrical Failure (MSL)

Case 2A: 50 scfh MSL, no core spray, sec. cont. sprays on

Time(sec)	Time (hr)	Time+2min	NobleGas	Elemlodine	Orglodine	Partlodine	Solubles	Insolubles
36.86	0.01024	0.044	0	0.000	0	1.387	1.387	1.387
934	0.25944	0.293	0	0.000	0	1.273	1.273	1.273
1891.4	0.52539	0.559	0	0.000	0	0.884	0.884	0.884
3520.6	0.97793	1.011	0	0.000	0	0.812	0.812	0.812
6923.4	1.92318	1.957	0	0.000	0	0.908	0.908	0.908
14251	3.9587	3.992	0	0.000	0	0.816	0.816	0.816
21301	5.9169	5.950	0	0.000	0	0.604	0.604	0.604
68661	19.0725	19.106	0	0.000	0	0.380	0.380	0.380
3E+06	720	720	0	0.000	0	0.000	0.000	0.000

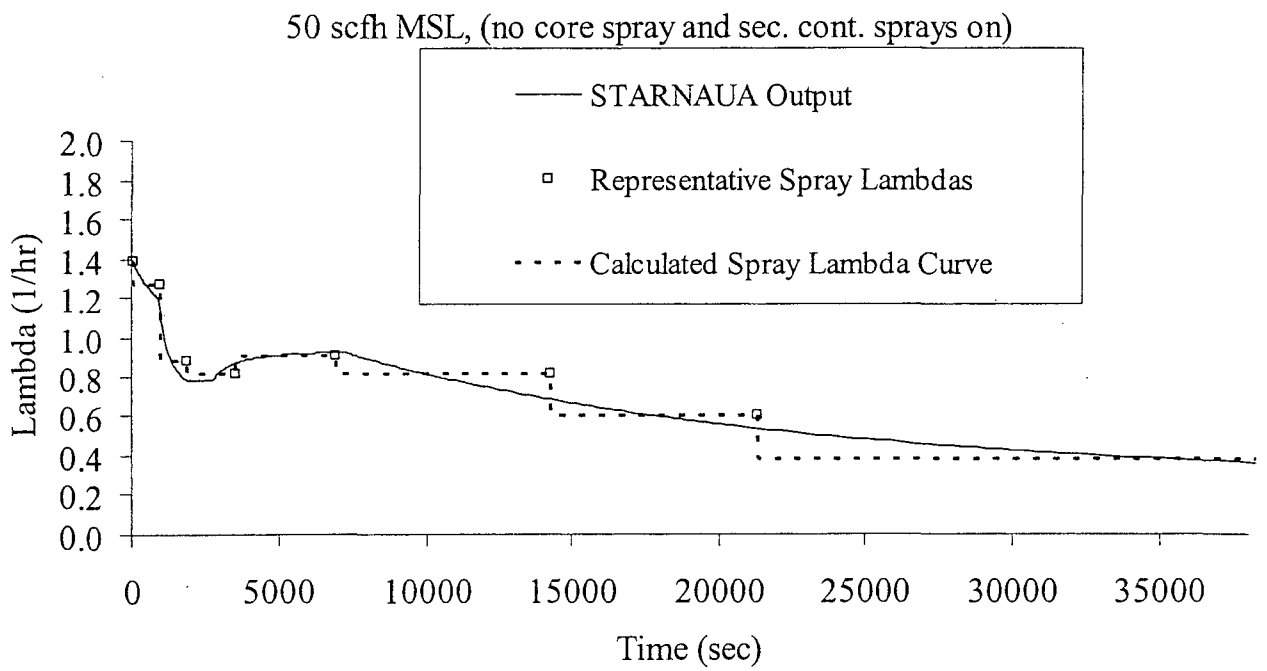

Project: Nine Mile Point Nuclear Station Unit: __1__ Disposition: ____

Originator/Date	Reviewer/Date	Calculation No.	Revision
H. Pustulka 12/12/06	D. Leaver 12/12/06	H21C092	00

Ref.

Case 1B: Core Spray, MSIV Failure (DW)

Case 1B: DW, core & primary cont. sprays on

Time(sec)	Time (hr)	Time+2min	NobleGas	Elemlodine	Orglodine	Partlodine	Solubles	Insolubles
102.26	0.02841	0.062	0	20.000	0	59.045	59.045	59.045
1739	0.48305	0.516	0	20.000	0	21.126	21.126	21.126
1840.4	0.51122	0.545	0	20.000	0	34.874	34.874	34.874
2892.6	0.80350	0.837	0	20.000	0	24.969	24.969	24.969
7143.4	1.98428	2.018	0	20.000	0	21.706	21.706	21.706
10553	2.93137	2.965	0	5.014	0	5.014	5.014	5.014
17174	4.77048	4.804	0	2.961	0	2.961	2.961	2.961
46748	12.9855	13.019	0	1.990	0	1.990	1.990	1.990
3E+06	720	720	0	0.000	0	0.000	0.000	0.000

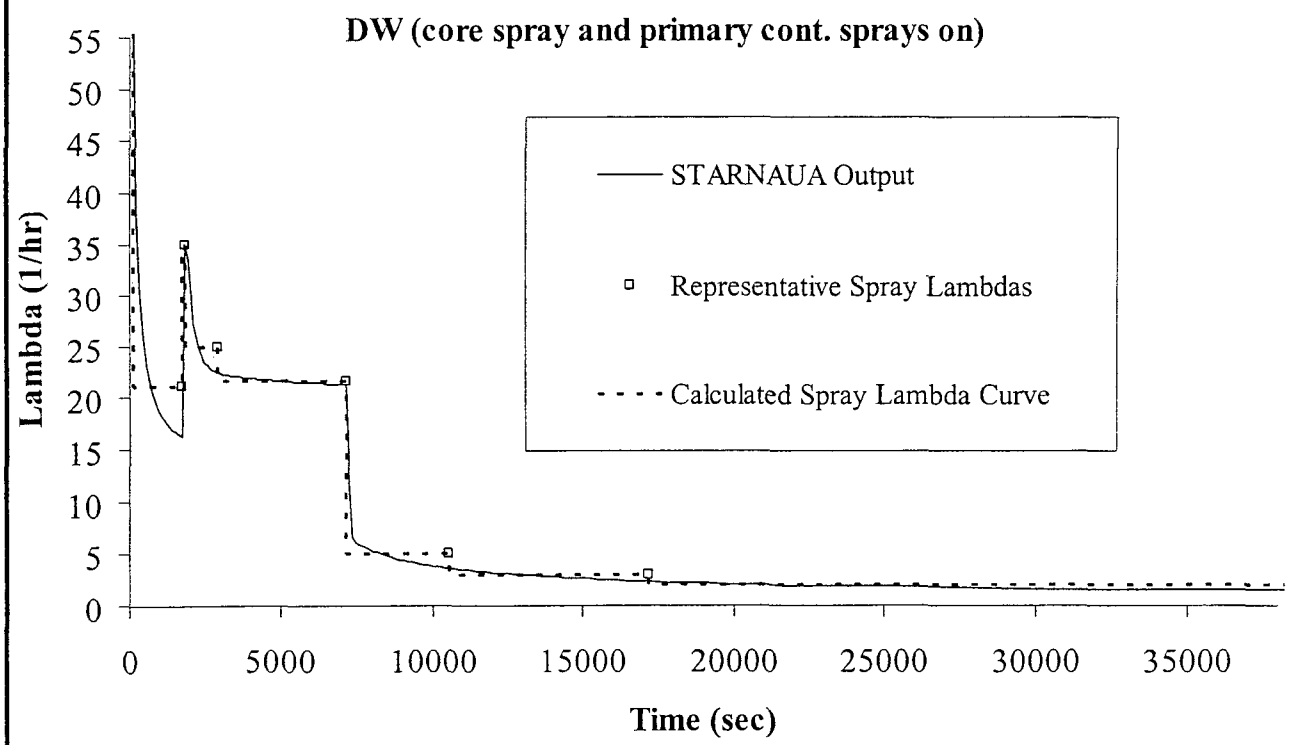

Project: Nine Mile Point Nuclear Station Unit: __1__ Disposition: ____

Originator/Date	Reviewer/Date	Calculation No.	Revision
H. Pustulka 12/12/06	D. Leaver 12/12/06	H21C092	00

Ref.

CASE 1B: Core Spray, MSIV Failure (MSL)

Case 1B: 50 scfh MSL, core spray and primary cont. sprays on

Time(sec)	Time (hr)	Time+2min	NobleGas	Elemlodine	Orglodine	Partlodine	Solubles	Insolubles
36.76	0.01021	0.044	0	0.000	0	1.341	1.341	1.341
933.86	0.25941	0.293	0	0.000	0	1.236	1.236	1.236
1900.9	0.52802	0.561	0	0.000	0	0.852	0.852	0.852
4255.9	1.18221	1.216	0	0.000	0	0.762	0.762	0.762
7917	2.19915	2.232	0	0.000	0	0.835	0.835	0.835
17339	4.8165	4.850	0	0.000	0	0.720	0.720	0.720
27485	7.6347	7.668	0	0.000	0	0.519	0.519	0.519
73510	20.4195	20.453	0	0.000	0	0.339	0.339	0.339
3E+06	720	720	0	0.000	0	0.000	0.000	0.000

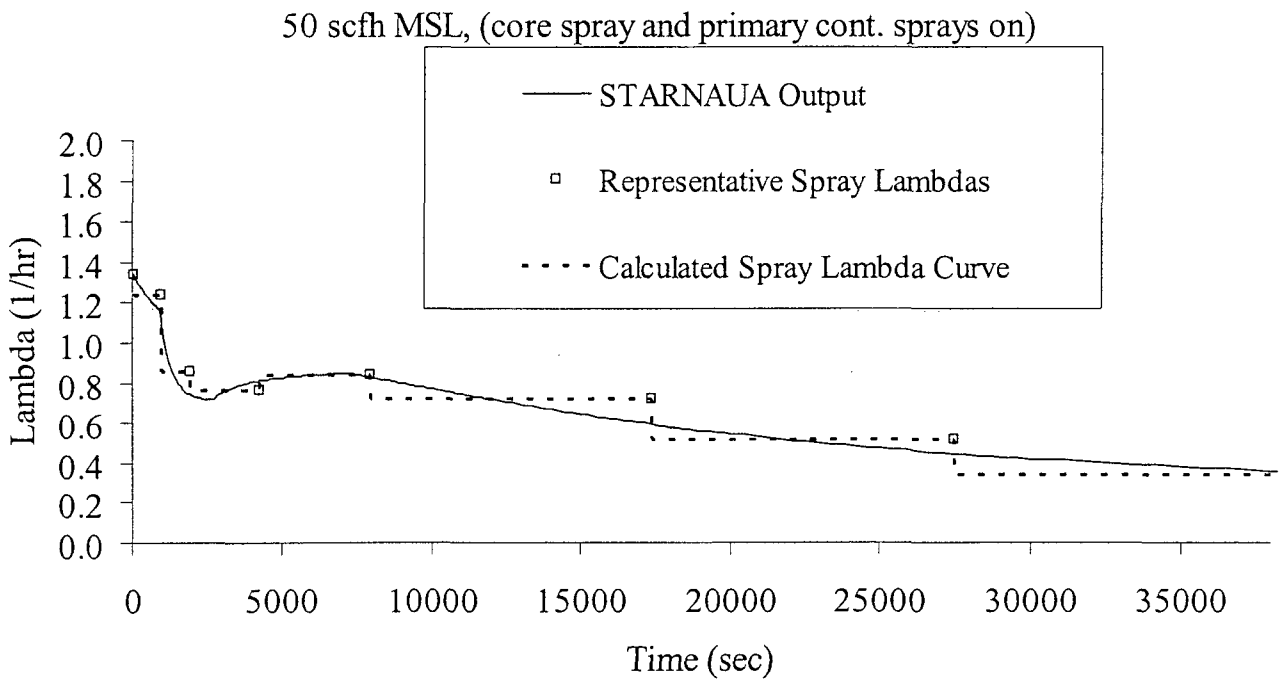

Ref.

Appendix C-1: Conservative Preliminary MSL Lambdas for Case 1A

Methodology
Preliminary MSL Lambda values were used in the dose analysis.

Justification
Since the preliminary values were conservative (as depicted in the graph below), the preliminary lambdas were used in the subsequent dose analyses.

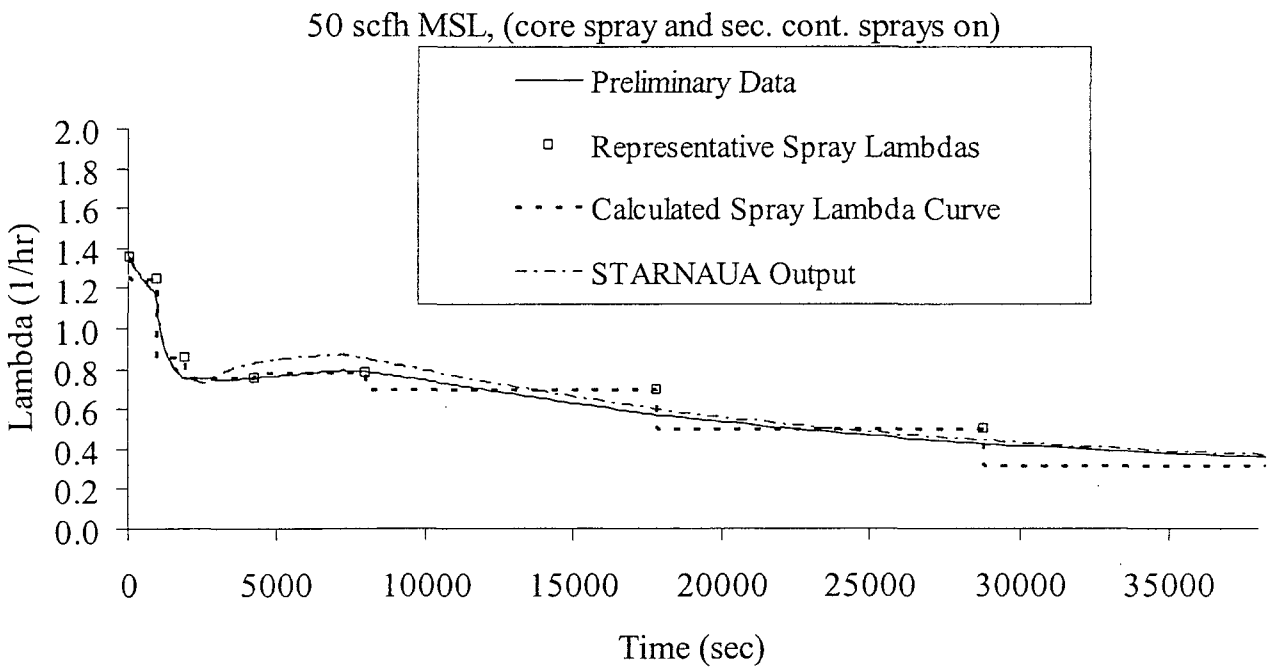

Ref.

References

C-1 STARDOSE Model report, Polestar Applied Technology, Inc., Rev. 1, March 2002.

C-2 NUREG/CR-6604, "RADTRAD: A simplified model for Radionuclide Transport and Removal And Dose Estimation," Dated April 1998 (with Supplements 1 and 2)

C-3 Standard Review Plan 6.5.2

Ref.

Appendix D RADTRAD Dose Analysis (123 Pages)

Application of the Alternative Source Term (AST) to NMP1 LOCA

Approach

Application of the AST to the NMP1 LOCA analysis involves the following steps:

- Review Regulatory Guide 1.183 (Reference D-1) to ensure that methods being applied to the NMP LOCA analysis conform to the requirements of that document.
- Using the calculated removal rates and other input data compiled in Reference D-2, prepare a RADTRAD (Reference D-3, D-4) analysis of the NMP1 LOCA radiation doses for offsite (EAB and LPZ) as well as for control room.
- Obtain the dose contribution to control room personnel from radiation sources outside the control room.
- Prepare an independent review of the overall AST dose analysis (Appendix E).

Assumptions

1. At the end of the release phase, it is assumed that complete mixing between the drywell and the wetwell will commence. Suppression pool scrubbing is neglected.

Justification: Because of steam and hydrogen produced during and after the core quench, a rapid exchange of drywell and wetwell gas space is expected. A mixing rate of one wetwell volume per minute is assumed. Suppression pool scrubbing is neglected even though Reference D-1 states that it may be acceptable on a case-by-case basis and even though the suppression pool scrubbing was taken into account (conservatively) in the STARNAUA analysis (Appendix B).

2. Assume that all MSIVs are closed before the activity release from the core begins.

Justification: The loss of an electrical division (assumed herein for the limiting Case 1A) will delay closure of the inboard MSIVs, but the impact of the delayed closure is expected to be negligible because of the extended secondary containment bypass considered in Case 1A for all containment leakage.

3. Assume that the leak rate from the space between MSIVs is conservatively increased by the ratio of the sonic velocity for the higher temperature of the steam line (550 F) relative to that of the drywell (281 F).

Justification: The ratio of the steam line absolute temperature to the peak drywell absolute temperature is 1.36. The square root of this value represents the difference in sonic velocity (1.17), and this is used as a multiplier for flow out of the space between MSIVs (1.166 x 20.5 cfh/ 60 min/hr = 0.398 cfm).

Design Inputs

Design inputs are consistent with those outlined in the main body of this calculation.

Representative spray removal lambdas were calculated in Appendix C from the information provided in Appendix B of this calculation.

Ref.

Methodology

Figure D-1: Schematic of Volumes and Pathways for RADTRAD Analysis

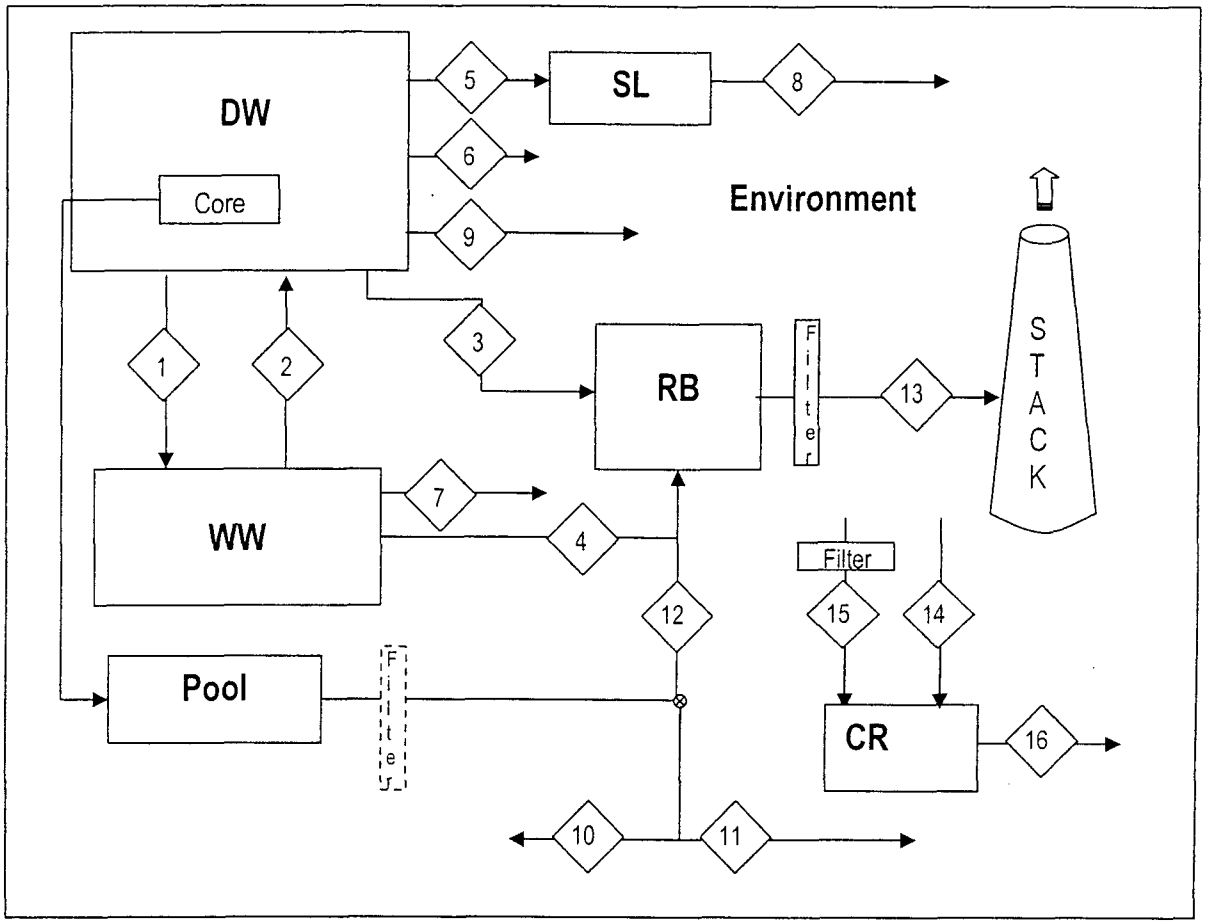

Volumes

Drywell (DW): 1.80E+05 ft^3
Wetwell (WW): 1.20E+05 ft^3
Reactor Building (RB): 1.06E+06 ft^3
Steam Line (SL): 164.8 ft^3 (sum of both steam lines)
Suppression Pool (Pool): 7.97E+04 ft^3
Control Room (CR): 1.35E+05 ft^3

Table D-1: RADTRAD Model Junction Description

#	Pathway	Description
1	DW → WW	1.80E+05 cfm, or a flowrate of one volume per minute is used to represent uniform mixing.
2	WW → DW	
3	DW→ RB	1.875 cfm after 6 hours.
4	WW→ RB	1.25 cfm after 6 hours.
5	DW→ SL	0.684 cfm total for both steam lines (100 scfh)
6	DW→ Environment	Temporary bypass, 1.875 cfm until drawdown at 6 hours.
7	WW→ Environment	Temporary bypass, 1.25 cfm until drawdown at 6 hours.
8	SL→ Environment	0.796 cfm total for both steam lines (100 scfh)
9	DW→ Environment	Permanent bypass 0.284 cfm (41.5 scfh)
10	Pool→ Environment	ESF (Ground Level Component)
11	Pool→ Environment	ESF (Stack Component)
12	Pool→ RB	1200 gph = 2.67 cfm
13	RB→ Environment	Stack Release to the environment 1600 cfm.
14	Environment→ CR	Unfiltered inleakage 100 cfm
15	Environment→ CR	Filtered inleakage 2025 cfm
16	CR→ Environment	Exhaust from the CR, 2125 cfm (2025 cfm + 100 cfm)

The dose calculation model consists of eight control volumes representing the Drywell (DW), Wetwell (WW), Reactor Building (RB), Steam Line (SL), Environment, Suppression Pool (Pool), Dummy Volume (Dummy) and the Control Room (CR).

All the control volumes are arranged as shown on Figure D-1 with the various junctions that connect them. These junctions are associated with volumetric flows which determine the rate at which radioactivity is exchanged between the control volumes. In addition, removal processes such as sedimentation in pipes and filtration are modeled within and between the control volumes, as appropriate.

The RADTRAD computer code is used to perform this dose calculation.

Multiple runs

Each release pathway to the environment has its own set of X/Qs and needs to be treated separately. In RADTRAD, control room X/Q input is part of the control room volume input, not part of the release pathway description. Consequently, to each X/Q set requires a pathway specific RADTRAD run.

It should also be noted that ESF pathways also require unique RADTRAD inputs.

Per RG 1.183 (Reference D-1), 10% of the core inventory of iodine (as 97% elemental and 3% organic) must be released to the RB. However, the partitioning of iodine in RG 1.183 amounts to only 5% of elemental and organic iodine (and 95% particulate). Consequently, in order to retrieve the correct amount of iodine in the RB with the

Ref.

correct species, one models the ESF leakage as follows: (1) Twice the core inventory of iodine is placed into the suppression pool so that the pool inventory of elemental and organic iodine corresponds to 10% of the initial inventory, (2) The leakage from the pool to the RB is filtered with a filter efficiency of 100% for the particulate specie so that only the elemental and organic species enter the RB.

In RADTRAD, releases from the core into a control volume are modeled by directing a fraction of an entire core inventory file into that specific volume. However, it is not possible to distinguish between nuclides, that is to say it is not possible to affect all the AST nuclides to the DW and some additional iodine nuclides to the pool for ESF treatment purposes. Moreover, the code accepts only one inventory file at a time.

One easiest way to model the ESF release would have been to double the initial core inventory and to put 50% of it into the drywell and 50% of it into the suppression pool in the same run. However, this option would have put noble gases in the suppression pool control volume in addition to the iodine and other particle isotopes. While the latter isotopes could be filtered out when modeling the leakage to the reactor building, noble gases cannot be removed. Therefore, this option was abandoned, as it would have tripled the noble gas inventory in the problem. (Note that some noble gases are actually produced, resulting from decay of iodine isotopes in the suppression pool, but there should not be any noble gases in the suppression pool in the first place.)

Consequently, a specific release fraction file (named BWR_Idblt.rft) was prepared. It includes iodine nuclides (with a doubled inventory to reach the 10% release level) and all other nuclides of the original file (but with their inventories set to zero). Two additional RADTRAD runs were then performed with this specific "ESF" source term: one for the ESF activity leaking out to the environment from the base of the stack, one for the leakage out of the stack.

Five plant scenario files were created for this analysis. For each run, the inactive release pathways to the environment are redirected to a dummy volume so that the flow paths are not set to zero. Shutting down completely the inactive junctions would have an impact on the activity present in each control volume over time and would not give correct results. The five runs are as follows:

- 1Aa: MSIV and Permanent Bypass (Uses TB X/Qs)
- 1Ab: Temporary Bypass, ends at 6 hours (Uses RB X/Qs)
- 1Ac: Stack Release (Uses Stack X/Qs)
- 1Ad: ESF Temporary Bypass, ends at 6 hours (Uses RB X/Qs)
- 1Ae: ESF Stack Release (Uses Stack X/Qs)

Secondary Input Files

Plant Scenario File (.psf)

Each of the five RADTRAD runs uses a specific main input file (.PSF). These files are the key input files as they contain most the key information related to the run: control volumes, junctions, filter efficiencies, X/Qs etc.

Nuclide Information File (.nif)

The 60 isotopes used in RADTRAD are listed in the nmp1.nif file. One will find the radionuclide inventories listed as Ci/MWt in this file. The inventory input is the exact inventory of Reference D-2, Item 1.2.

Ref.

Release Fraction File (.rft):
The files BWR_DBA.rft and BWR_Idblt.rft were used. These file contains information specific to the AST source term, i.e., the fraction and timing of each release phases. A delay of two minutes is credited before the 30-minute gap release starts, followed by a 1.5-hour early in vessel release phase. The release is complete after 2 hours and 2 minutes (2.033 hr) accident time. This file is in agreement with Reference D-2, Items 2.1 through 2.3. BWR_Idblt.rft has all nuclide groups set to zero except for iodine to account for ESF leakage modeling.

Dose Conversion Factors File (.inp)
The Dose Conversion Factors file used for these RADTRAD runs is based on the Federal Guide Reports 11 and 12. The file used is 1006fgrnmp1.inp. This file is a modification of the default RADTRAD file called FGR11&12.INP to include Rb88.

Table D-2 summarizes the inputs of each of the RADTRAD runs performed in this analysis.

Table D-2: RADTRAD Input Summary

	Run	1Aa	1Ab	1Ac	1Ad	1Ae
RADTRAD Input	.psf	NMP1-Case 1Aa.psf	NMP1-Case 1Ab.psf	NMP1-Case 1Ac.psf	NMP1-Case 1Ad.psf	NMP1-Case 1Ae.psf
	.nif	nmp1.nif				
	.inp	1006fgrnmp1.inp				
	.rft	BWR_DBA.rft			BWR_Idbl.rft	
	Path*	MSIV & Permanent Bypass	Temporary Bypass	Stack Release	ESF Temporary Bypass	ESF Stack Release
	6	-	x	-	-	-
	7	-	x	-	-	-
	8	x	-	-	-	-
	9	x	-	-	-	-
	10	-	-	-	x	-
	11	-	-	-	-	x
	13	-	-	x	-	-

*Only pathways that release activity to the environment are included in this chart.

The TEDE value for the control room and offsite doses will be obtained by adding the dose contribution from each of the RADTRAD runs.

Maximum Two-Hour EAB TEDE

The maximum two-hour EAB dose of one complete set of five runs is not the sum of the five maximum two-hour EAB doses of each of the five runs. Consequently, a spreadsheet (Appendix D4) was used to add up the EAB TEDE at each time step for each of the five runs and subsequently retrieve the maximum TEDE over a two-hour period. In this analysis the X/Q values are held constant to allow for a meaningful comparison.

Ref.

Documentation of Runs

- Appendix D1: Five main input files (.PSF) - runs 1Aa, 1Ab, 1Ac, 1Ad and 1Ae.
- Appendix D2: Four secondary input files - one .nif, two .rft, one .inp
- Appendix D3: Five output excerpts are shown – runs 1Aa, 1Ab, 1Ac, 1Ad and 1Ae.
- Appendix D4: Max 2-hour EAB TEDE Spreadsheet

Note that inputs were prepared using RADTRAD 3.02a. Execution was done with RADTRAD 3.03.

Results

Table D-3: RADTRAD Results

Run #	Release Pathway	30-d CR TEDE (rem)	Max 2-h EAB TEDE (rem)	30-d LPZ TEDE (rem)
1Aa	MSIV and Permanent Bypass	8.55E-01	8.61E-01	2.90E-01
1Ab	Temporary Bypass	1.77E+00	6.31E+00	9.22E-01
1Ac	Stack Release	5.11E-02	0.00E+00	1.40E-02
1Ad	ESF Temporary Bypass	5.39E-01	1.54E+00	2.84E-01
1Ae	ESF Stack Release	6.87E-01	3.09E-01	8.77E-02
(2)	External Shine	9.10E-01	(1)	(1)
Total	All Pathways	4.81E+00	9.02E+00	1.60E+00
Limit(3)		5	25	25

(1) Not applicable for offsite dose
(2) Not calculated with RADTRAD, Total Shine is equal to 0.62 rem [RB shine, Appendix G] + 0.26 rem [Plume Shine, Appendix I] + 0.03 rem [CR Filter Shine, Appendix L]
(3) LOCA dose limit at 30 days [Ref D-1]

References

D-1 "Alternative Radiological Source Terms for Evaluating Design Basis Accidents at Nuclear Power Reactors", US NRC Regulatory Guide 1.183, Revision 0, July 2000

D-2 PSAT 4026CF.QA.03, "Design Data Base for Application of the Alternative DBA Source Term to Nine Mile Point Unit 1" Revision 0

D-3 RADTRAD Executable Version 3.03.

D-4 US NRC NUREG/CR-6604, "RADTRAD: A Simplified Model for Radionuclide Transport and Removal and Dose Estimation", December 1997.

Ref.

Appendix D1: Plant Scenario Files (.psf) for Case 1A
(LIMITING CASE: Core Spray Division Electrical Failure)

Appendix D1.1: NMP1-Case 1Aa.psf (MSIV Leakage & Permanent Bypass)

```
Radtrad 3.02 1/5/2000
 Case I for NMP1-MSIVs and Permanent Bypass
 Nuclide Inventory File:
 c:\[Pathname]\nmp1.nif
 Plant Power Level:
  1.8870E+03
 Compartments:
  8
 Compartment 1:
 DW
  3
  1.8000E+05
  1
  0
  0
  0
  0
 Compartment 2:
 WW
  3
  1.2000E+05
  0
  0
  0
  0
  0
 Compartment 3:
 RB
  3
  1.0600E+06
  0
  0
  0
  0
  0
 Compartment 4:
 SL
  3
  1.6480E+02
  0
  0
  0
  1
  0
 Compartment 5:
 Environment
  2
  0.0000E+00
  0
```

Ref.

0
0
0
0
Compartment 6:
Pool
3
7.9700E+04
0
0
0
0
0
Compartment 7:
Dummy
3
1.0000E+00
0
0
0
0
0
Compartment 8:
Control Room
1
1.3500E+05
0
0
0
0
0
Pathways:
16
Pathway 1:
DW to WW
1
2
4
Pathway 2:
WW to DW
2
1
4
Pathway 3:
DW to RB
1
3
4
Pathway 4:
WW to RB
2
3
4
Pathway 5:
DW to SL
1

Project: Nine Mile Point Nuclear Station Unit: __1_ Disposition: ____

Originator/Date	Reviewer/Date	Calculation No.	Revision
J. Metcalf 12/12/06	D. Leaver 12/12/06	H21C092	00

Ref.

4
2
Pathway 6:
DW to Environment
1
7
4
Pathway 7:
WW to Environment
2
7
4
Pathway 8:
SL to Environment
4
5
1
Pathway 9:
DW to Environment'
1
5
1
Pathway 10:
Pool to Environment
6
5
1
Pathway 11:
Pool to Environment'
6
5
2
Pathway 12:
Pool to RB
6
3
1
Pathway 13:
RB to Environment
3
7
2
Pathway 14:
Environment to Control Room
5
8
2
Pathway 15:
Environment to Control Room'
5
8
2
Pathway 16:
Control Room to Environment
8
5

Ref.

```
 1
End of Plant Model File
Scenario Description Name:

Plant Model Filename:

Source Term:
 1
 1  1.0000E+00
c:\ [Pathname]\1006fgrnmp1.inp
c:\ [Pathname]\bwr_dba.rft
 0.0000E+00
 1
 9.5000E-01  4.8500E-02  1.5000E-03  1.0000E+00
Overlying Pool:
 0
 0.0000E+00
 0
 0
 0
 0
Compartments:
 8
Compartment 1:
 0
 1
 1
 0.0000E+00
10
 0.0000E+00  5.2895E+01
 3.0900E-02  1.9125E+01
 4.9630E-01  3.1616E+01
 5.2360E-01  2.2682E+01
 8.0030E-01  1.9849E+01
 1.9848E+00  4.9360E+00
 2.7268E+00  2.9750E+00
 4.2805E+00  2.0100E+00
 1.4990E+01  0.0000E+00
 7.2000E+02  0.0000E+00
 1
 0.0000E+00
10
 0.0000E+00  2.0000E+01
 3.0900E-02  1.9125E+01
 4.9630E-01  2.0000E+01
 5.2360E-01  2.0000E+01
 8.0030E-01  1.9849E+01
 1.9848E+00  4.9360E+00
 2.7268E+00  2.9750E+00
 4.2805E+00  2.0100E+00
 1.4990E+01  0.0000E+00
 7.2000E+02  0.0000E+00
 1
 0.0000E+00
 0
 0
```

Ref.

0
0
0
Compartment 2:
0
1
0
0
0
0
0
0
0
Compartment 3:
0
1
0
0
0
0
0
0
0
Compartment 4:
0
1
0
0
0
0
0
1
10
0.0000E+00 1.3540E+00
1.0200E-02 1.2460E+00
2.5960E-01 8.6000E-01
5.2900E-01 7.5200E-01
1.1778E+00 7.7700E-01
2.2108E+00 6.9100E-01
4.9520E+00 4.9800E-01
7.9948E+00 3.1700E-01
2.4047E+01 0.0000E+00
7.2000E+02 0.0000E+00
0
Compartment 5:
0
1
0
0
0
0
0
0
0
Compartment 6:
0

Ref.

1
0
0
0
0
0
0
0
Compartment 7:
0
1
0
0
0
0
0
0
0
Compartment 8:
0
1
0
0
0
0
0
0
0
Pathways:
16
Pathway 1:
0
0
0
0
0
0
0
0
0
0
1
2
0.0000E+00 0.0000E+00
2.0333E+00 1.4400E+05
0
Pathway 2:
0
0
0
0
0
0
0
0
0

Ref.

```
 0
 1
 2
 0.0000E+00  0.0000E+00
 2.0333E+00  2.1600E+05
 0
Pathway 3:
 0
 0
 0
 0
 0
 0
 0
 0
 0
 0
 1
 3
 0.0000E+00  0.0000E+00
 6.0000E+00  1.5000E+00
 2.4000E+01  7.5000E-01
 0
Pathway 4:
 0
 0
 0
 0
 0
 0
 0
 0
 0
 0
 1
 3
 0.0000E+00  0.0000E+00
 6.0000E+00  1.5000E+00
 2.4000E+01  7.5000E-01
 0
Pathway 5:
 0
 0
 0
 0
 0
 1
 2
 0.0000E+00  6.8400E-01  5.0000E+01  5.0000E+01  0.0000E+00
 2.4000E+01  3.4200E-01  5.0000E+01  5.0000E+01  0.0000E+00
 0
 0
 0
 0
 0
 0
```

Project: Nine Mile Point Nuclear Station Unit: __1_ Disposition: ____

Originator/Date	Reviewer/Date	Calculation No.	Revision
J. Metcalf 12/12/06	D. Leaver 12/12/06	H21C092	00

Ref.

```
Pathway 6:
 0
 0
 0
 0
 0
 0
 0
 0
 0
 0
 1
 2
 0.0000E+00  1.5000E+00
 6.0000E+00  0.0000E+00
 0
Pathway 7:
 0
 0
 0
 0
 0
 0
 0
 0
 0
 0
 1
 2
 0.0000E+00  1.5000E+00
 6.0000E+00  0.0000E+00
 0
Pathway 8:
 0
 0
 1
 2
 0.0000E+00  1.0000E+00  7.9600E-01
 2.4000E+01  1.0000E+00  3.9800E-01
 1
 2
 0.0000E+00  1.0000E+00  7.9600E-01
 2.4000E+01  1.0000E+00  3.9800E-01
 1
 2
 0.0000E+00  1.0000E+00  7.9600E-01
 2.4000E+01  1.0000E+00  3.9800E-01
 0
 0
 0
 0
 0
 0
 0
Pathway 9:
 0
```

Project: Nine Mile Point Nuclear Station Unit: __1_ Disposition: ____

Originator/Date	Reviewer/Date	Calculation No.	Revision
J. Metcalf 12/12/06	D. Leaver 12/12/06	H21C092	00

Ref.

0
1
2
0.0000E+00 2.0000E+00 2.8400E-01
2.4000E+01 2.0000E+00 1.4200E-01
1
2
0.0000E+00 2.0000E+00 2.8400E-01
2.4000E+01 2.0000E+00 1.4200E-01
1
2
0.0000E+00 1.0000E+00 2.8400E-01
2.4000E+01 1.0000E+00 1.4200E-01
0
0
0
0
0
0
0
Pathway 10:
0
0
1
6
0.0000E+00 1.0000E+06 2.6700E+00
5.0000E-01 1.0000E+06 1.7400E+00
7.0000E-01 1.0000E+06 8.3000E-01
1.0000E+00 1.0000E+06 2.2000E-01
2.0333E+00 1.0000E+06 1.0000E-01
6.0000E+00 1.0000E+06 0.0000E+00
1
6
0.0000E+00 1.0000E+00 2.6700E+00
5.0000E-01 1.0000E+00 1.7400E+00
7.0000E-01 1.0000E+00 8.3000E-01
1.0000E+00 1.0000E+00 2.2000E-01
2.0333E+00 1.0000E+00 1.0000E-01
6.0000E+00 1.0000E+00 0.0000E+00
1
6
0.0000E+00 1.0000E+00 2.6700E+00
5.0000E-01 1.0000E+00 1.7400E+00
7.0000E-01 1.0000E+00 8.3000E-01
1.0000E+00 1.0000E+00 2.2000E-01
2.0333E+00 1.0000E+00 1.0000E-01
6.0000E+00 1.0000E+00 0.0000E+00
0
0
0
0
0
0
0
Pathway 11:
0

Ref.

```
0
0
0
0
1
6
0.0000E+00  0.0000E+00  9.9990E+01  9.0000E+01  9.0000E+01
5.0000E-01  9.3000E-01  9.9990E+01  9.0000E+01  9.0000E+01
7.0000E-01  1.8400E+00  9.9990E+01  9.0000E+01  9.0000E+01
1.0000E+00  2.4500E+00  9.9990E+01  9.0000E+01  9.0000E+01
2.0333E+00  2.5700E+00  9.9990E+01  9.0000E+01  9.0000E+01
6.0000E+00  0.0000E+00  9.9990E+00  9.0000E+01  9.0000E+01
0
0
0
0
0
0
Pathway 12:
0
0
1
2
0.0000E+00  1.0000E+06  0.0000E+00
6.0000E+00  1.0000E+06  2.6700E+00
1
2
0.0000E+00  1.0000E+00  0.0000E+00
6.0000E+00  1.0000E+00  2.6700E+00
1
2
0.0000E+00  1.0000E+00  0.0000E+00
6.0000E+00  1.0000E+00  2.6700E+00
0
0
0
0
0
0
0
Pathway 13:
0
0
0
0
0
1
1
0.0000E+00  1.6000E+03  9.5000E+01  9.5000E+01  9.0000E+01
0
0
0
0
0
0
Pathway 14:
```

Ref.

0
0
0
0
0
1
1
0.0000E+00 1.0000E+02 0.0000E+00 0.0000E+00 0.0000E+00
0
0
0
0
0
0
Pathway 15:
0
0
0
0
0
1
1
0.0000E+00 2.0250E+03 9.5000E+01 9.5000E+01 9.0000E+01
0
0
0
0
0
0
Pathway 16:
0
0
1
1
0.0000E+00 1.0000E+00 2.1250E+03
1
1
0.0000E+00 1.0000E+00 2.1250E+03
1
1
0.0000E+00 1.0000E+00 2.1250E+03
0
0
0
0
0
0
0
Dose Locations:
3
Location 1:
EAB
5
1
4
0.0000E+00 0.0000E+00

Project: Nine Mile Point Nuclear Station Unit: __1_ Disposition: ____

Originator/Date	Reviewer/Date	Calculation No.	Revision
J. Metcalf 12/12/06	D. Leaver 12/12/06	H21C092	00

Ref.

5.0000E-01 1.9000E-04
2.5000E+00 0.0000E+00
7.2000E+02 0.0000E+00
1
4
0.0000E+00 3.5000E-04
8.0000E+00 1.8000E-04
2.4000E+01 2.3000E-04
7.2000E+02 0.0000E+00
0
Location 2:
LPZ
5
1
5
0.0000E+00 1.6300E-05
8.0000E+00 1.1000E-05
2.4000E+01 4.6700E-06
9.6000E+01 1.3700E-06
7.2000E+02 0.0000E+00
1
4
0.0000E+00 3.5000E-04
8.0000E+00 1.8000E-04
2.4000E+01 2.3000E-04
7.2000E+02 0.0000E+00
0
Location 3:
Control Room
8
0
1
2
0.0000E+00 3.5000E-04
7.2000E+02 0.0000E+00
1
4
0.0000E+00 1.0000E+00
2.4000E+01 6.0000E-01
9.6000E+01 4.0000E-01
7.2000E+02 0.0000E+00
Effective Volume Location:
1
7
0.0000E+00 5.8500E-04
5.0000E-01 1.0300E-03
2.5000E+00 5.8500E-04
8.0000E+00 2.0700E-04
2.4000E+01 1.7500E-04
9.6000E+01 1.5200E-04
7.2000E+02 0.0000E+00
Simulation Parameters:
1
0.0000E+00 0.0000E+00
Output Filename:
C:\ [Pathname]\NMP1-Case 1Aa.o0

Project: Nine Mile Point Nuclear Station Unit: __1_ Disposition: ____

Originator/Date	Reviewer/Date	Calculation No.	Revision
J. Metcalf 12/12/06	D. Leaver 12/12/06	H21C092	00

Ref.

1
1
1
0
0
End of Scenario File

Ref.

Appendix D1.2: NMP1-Case 1Ab.psf (Temporary Bypass)

```
Radtrad 3.02 1/5/2000
Case I for NMP1-MSIVs and Permanent Bypass
Nuclide Inventory File:
c:\[Pathname]\nmp1.nif
Plant Power Level:
 1.8870E+03
Compartments:
 8
Compartment 1:
DW
 3
 1.8000E+05
 1
 0
 0
 0
 0
Compartment 2:
WW
 3
 1.2000E+05
 0
 0
 0
 0
 0
Compartment 3:
RB
 3
 1.0600E+06
 0
 0
 0
 0
 0
Compartment 4:
SL
 3
 1.6480E+02
 0
 0
 0
 1
 0
Compartment 5:
Environment
 2
 0.0000E+00
 0
 0
 0
 0
 0
```

Project: Nine Mile Point Nuclear Station Unit: __1_ Disposition: ____

Originator/Date	Reviewer/Date	Calculation No.	Revision
J. Metcalf 12/12/06	D. Leaver 12/12/06	H21C092	00

Ref.

Compartment 6:
Pool
3
7.9700E+04
0
0
0
0
0
Compartment 7:
Dummy
3
1.0000E+00
0
0
0
0
0
Compartment 8:
Control Room
1
1.3500E+05
0
0
0
0
0
Pathways:
16
Pathway 1:
DW to WW
1
2
4
Pathway 2:
WW to DW
2
1
4
Pathway 3:
DW to RB
1
3
4
Pathway 4:
WW to RB
2
3
4
Pathway 5:
DW to SL
1
4
2
Pathway 6:
DW to Environment

Project: Nine Mile Point Nuclear Station Unit: __1_ Disposition: ____

Originator/Date	Reviewer/Date	Calculation No.	Revision
J. Metcalf 12/12/06	D. Leaver 12/12/06	H21C092	00

Ref.

1
5
4
Pathway 7:
WW to Environment
2
5
4
Pathway 8:
SL to Environment
4
7
1
Pathway 9:
DW to Environment'
1
7
1
Pathway 10:
Pool to Environment
6
5
1
Pathway 11:
Pool to Environment'
6
5
2
Pathway 12:
Pool to RB
6
3
1
Pathway 13:
RB to Environment
3
7
2
Pathway 14:
Environment to Control Room
5
8
2
Pathway 15:
Environment to Control Room'
5
8
2
Pathway 16:
Control Room to Environment
8
5
1
End of Plant Model File
Scenario Description Name:

Ref.

```
Plant Model Filename:

Source Term:
 1
 1  1.0000E+00
c:\ [Pathname]\1006fgrnmp1.inp
c:\ [Pathname]\bwr_dba.rft
 0.0000E+00
 1
 9.5000E-01  4.8500E-02  1.5000E-03  1.0000E+00
Overlying Pool:
 0
 0.0000E+00
 0
 0
 0
 0
Compartments:
 8
Compartment 1:
 0
 1
 1
 0.0000E+00
10
 0.0000E+00  5.2895E+01
 3.0900E-02  1.9125E+01
 4.9630E-01  3.1616E+01
 5.2360E-01  2.2682E+01
 8.0030E-01  1.9849E+01
 1.9848E+00  4.9360E+00
 2.7268E+00  2.9750E+00
 4.2805E+00  2.0100E+00
 1.4990E+01  0.0000E+00
 7.2000E+02  0.0000E+00
 1
 0.0000E+00
10
 0.0000E+00  2.0000E+01
 3.0900E-02  1.9125E+01
 4.9630E-01  2.0000E+01
 5.2360E-01  2.0000E+01
 8.0030E-01  1.9849E+01
 1.9848E+00  4.9360E+00
 2.7268E+00  2.9750E+00
 4.2805E+00  2.0100E+00
 1.4990E+01  0.0000E+00
 7.2000E+02  0.0000E+00
 1
 0.0000E+00
 0
 0
 0
 0
 0
Compartment 2:
```

Ref.

0
1
0
0
0
0
0
0
0
Compartment 3:
0
1
0
0
0
0
0
0
0
Compartment 4:
0
1
0
0
0
0
0
1
10
0.0000E+00 1.3540E+00
1.0200E-02 1.2460E+00
2.5960E-01 8.6000E-01
5.2900E-01 7.5200E-01
1.1778E+00 7.7700E-01
2.2108E+00 6.9100E-01
4.9520E+00 4.9800E-01
7.9948E+00 3.1700E-01
2.4047E+01 0.0000E+00
7.2000E+02 0.0000E+00
0
Compartment 5:
0
1
0
0
0
0
0
0
0
Compartment 6:
0
1
0
0
0

Ref.

0
0
0
0
Compartment 7:
0
1
0
0
0
0
0
0
0
Compartment 8:
0
1
0
0
0
0
0
0
0
Pathways:
16
Pathway 1:
0
0
0
0
0
0
0
0
0
0
1
2
0.0000E+00 0.0000E+00
2.0333E+00 1.4400E+05
0
Pathway 2:
0
0
0
0
0
0
0
0
0
0
1
2
0.0000E+00 0.0000E+00

Ref.

2.0333E+00 2.1600E+05
0
Pathway 3:
0
0
0
0
0
0
0
0
0
0
1
3
0.0000E+00 0.0000E+00
6.0000E+00 1.5000E+00
2.4000E+01 7.5000E-01
0
Pathway 4:
0
0
0
0
0
0
0
0
0
0
1
3
0.0000E+00 0.0000E+00
6.0000E+00 1.5000E+00
2.4000E+01 7.5000E-01
0
Pathway 5:
0
0
0
0
0
1
2
0.0000E+00 6.8400E-01 5.0000E+01 5.0000E+01 0.0000E+00
2.4000E+01 3.4200E-01 5.0000E+01 5.0000E+01 0.0000E+00
0
0
0
0
0
0
Pathway 6:
0
0
0

Ref.

```
 0
 0
 0
 0
 0
 0
 0
 1
 2
 0.0000E+00  1.5000E+00
 6.0000E+00  0.0000E+00
 0
Pathway 7:
 0
 0
 0
 0
 0
 0
 0
 0
 0
 0
 1
 2
 0.0000E+00  1.5000E+00
 6.0000E+00  0.0000E+00
 0
Pathway 8:
 0
 0
 1
 2
 0.0000E+00  1.0000E+00  7.9600E-01
 2.4000E+01  1.0000E+00  3.9800E-01
 1
 2
 0.0000E+00  1.0000E+00  7.9600E-01
 2.4000E+01  1.0000E+00  3.9800E-01
 1
 2
 0.0000E+00  1.0000E+00  7.9600E-01
 2.4000E+01  1.0000E+00  3.9800E-01
 0
 0
 0
 0
 0
 0
 0
Pathway 9:
 0
 0
 1
 2
 0.0000E+00  1.0000E+00  2.8400E-01
```

Ref.

```
2.4000E+01  2.0000E+00  1.4200E-01
1
2
0.0000E+00  1.0000E+00  2.8400E-01
2.4000E+01  2.0000E+00  1.4200E-01
1
2
0.0000E+00  1.0000E+00  2.8400E-01
2.4000E+01  1.0000E+00  1.4200E-01
0
0
0
0
0
0
0
Pathway 10:
0
0
1
6
0.0000E+00  1.0000E+06  2.6700E+00
5.0000E-01  1.0000E+06  1.7400E+00
7.0000E-01  1.0000E+06  8.3000E-01
1.0000E+00  1.0000E+06  2.2000E-01
2.0333E+00  1.0000E+06  1.0000E-01
6.0000E+00  1.0000E+06  0.0000E+00
1
6
0.0000E+00  1.0000E+00  2.6700E+00
5.0000E-01  1.0000E+00  1.7400E+00
7.0000E-01  1.0000E+00  8.3000E-01
1.0000E+00  1.0000E+00  2.2000E-01
2.0333E+00  1.0000E+00  1.0000E-01
6.0000E+00  1.0000E+00  0.0000E+00
1
6
0.0000E+00  1.0000E+00  2.6700E+00
5.0000E-01  1.0000E+00  1.7400E+00
7.0000E-01  1.0000E+00  8.3000E-01
1.0000E+00  1.0000E+00  2.2000E-01
2.0333E+00  1.0000E+00  1.0000E-01
6.0000E+00  1.0000E+00  0.0000E+00
0
0
0
0
0
0
0
Pathway 11:
0
0
0
0
0
```

Project: Nine Mile Point Nuclear Station Unit: __1_ Disposition: ____

Originator/Date	Reviewer/Date	Calculation No.	Revision
J. Metcalf 12/12/06	D. Leaver 12/12/06	H21C092	00

Ref.

```
 1
 6
 0.0000E+00  0.0000E+00  9.9990E+01  9.0000E+01  9.0000E+01
 5.0000E-01  9.3000E-01  9.9990E+01  9.0000E+01  9.0000E+01
 7.0000E-01  1.8400E+00  9.9990E+01  9.0000E+01  9.0000E+01
 1.0000E+00  2.4500E+00  9.9990E+01  9.0000E+01  9.0000E+01
 2.0333E+00  2.5700E+00  9.9990E+01  9.0000E+01  9.0000E+01
 6.0000E+00  0.0000E+00  9.9990E+00  9.0000E+01  9.0000E+01
 0
 0
 0
 0
 0
 0
Pathway 12:
 0
 0
 1
 2
 0.0000E+00  1.0000E+06  0.0000E+00
 6.0000E+00  1.0000E+06  2.6700E+00
 1
 2
 0.0000E+00  1.0000E+00  0.0000E+00
 6.0000E+00  1.0000E+00  2.6700E+00
 1
 2
 0.0000E+00  1.0000E+00  0.0000E+00
 6.0000E+00  1.0000E+00  2.6700E+00
 0
 0
 0
 0
 0
 0
 0
Pathway 13:
 0
 0
 0
 0
 0
 1
 1
 0.0000E+00  1.6000E+03  9.5000E+01  9.5000E+01  9.0000E+01
 0
 0
 0
 0
 0
 0
Pathway 14:
 0
 0
 0
 0
```

Ref.

0
1
1
0.0000E+00 1.0000E+02 0.0000E+00 0.0000E+00 0.0000E+00
0
0
0
0
0
0
Pathway 15:
0
0
0
0
0
1
1
0.0000E+00 2.0250E+03 9.5000E+01 9.5000E+01 9.0000E+01
0
0
0
0
0
0
Pathway 16:
0
0
1
1
0.0000E+00 1.0000E+00 2.1250E+03
1
1
0.0000E+00 1.0000E+00 2.1250E+03
1
1
0.0000E+00 1.0000E+00 2.1250E+03
0
0
0
0
0
0
0
Dose Locations:
3
Location 1:
EAB
5
1
4
0.0000E+00 0.0000E+00
5.0000E-01 1.9000E-04
2.5000E+00 0.0000E+00
7.2000E+02 0.0000E+00
1

Ref.

```
 4
 0.0000E+00  3.5000E-04
 8.0000E+00  1.8000E-04
 2.4000E+01  2.3000E-04
 7.2000E+02  0.0000E+00
 0
Location 2:
LPZ
 5
 1
 5
 0.0000E+00  1.6300E-05
 8.0000E+00  1.1000E-05
 2.4000E+01  4.6700E-06
 9.6000E+01  1.3700E-06
 7.2000E+02  0.0000E+00
 1
 4
 0.0000E+00  3.5000E-04
 8.0000E+00  1.8000E-04
 2.4000E+01  2.3000E-04
 7.2000E+02  0.0000E+00
 0
Location 3:
Control Room
 8
 0
 1
 2
 0.0000E+00  3.5000E-04
 7.2000E+02  0.0000E+00
 1
 4
 0.0000E+00  1.0000E+00
 2.4000E+01  6.0000E-01
 9.6000E+01  4.0000E-01
 7.2000E+02  0.0000E+00
Effective Volume Location:
 1
 7
 0.0000E+00  2.6100E-04
 5.0000E-01  4.8200E-04
 2.5000E+00  2.6100E-04
 8.0000E+00  9.2500E-05
 2.4000E+01  6.7000E-05
 9.6000E+01  4.9300E-05
 7.2000E+02  0.0000E+00
Simulation Parameters:
 1
 0.0000E+00  0.0000E+00
Output Filename:
C:\ [Pathname]\NMP1-Case 1Ab.o0
 1
 1
 1
 0
```

Project: Nine Mile Point Nuclear Station Unit: __1_ Disposition: ____

Originator/Date	Reviewer/Date	Calculation No.	Revision
J. Metcalf 12/12/06	D. Leaver 12/12/06	H21C092	00

Ref.

0
End of Scenario File

Ref.

Appendix D1.3: NMP1-Case 1Ac.psf (Stack Release)

```
Radtrad 3.02 1/5/2000
Case I for NMP1-MSIVs and Permanent Bypass
Nuclide Inventory File:
c:\ [Pathname]\nmp1.nif
Plant Power Level:
 1.8870E+03
Compartments:
 8
Compartment 1:
DW
 3
 1.8000E+05
 1
 0
 0
 0
 0
Compartment 2:
WW
 3
 1.2000E+05
 0
 0
 0
 0
 0
Compartment 3:
RB
 3
 1.0600E+06
 0
 0
 0
 0
 0
Compartment 4:
SL
 3
 1.6480E+02
 0
 0
 0
 1
 0
Compartment 5:
Environment
 2
 0.0000E+00
 0
 0
 0
 0
 0
```

Ref.

Compartment 6:
Pool
3
7.9700E+04
0
0
0
0
0
Compartment 7:
Dummy
3
1.0000E+00
0
0
0
0
0
Compartment 8:
Control Room
1
1.3500E+05
0
0
0
0
0
Pathways:
16
Pathway 1:
DW to WW
1
2
4
Pathway 2:
WW to DW
2
1
4
Pathway 3:
DW to RB
1
3
4
Pathway 4:
WW to RB
2
3
4
Pathway 5:
DW to SL
1
4
2
Pathway 6:
DW to Environment

Ref.

1
7
4
Pathway 7:
WW to Environment
2
7
4
Pathway 8:
SL to Environment
4
7
1
Pathway 9:
DW to Environment'
1
7
1
Pathway 10:
Pool to Environment
6
5
1
Pathway 11:
Pool to Environment'
6
5
2
Pathway 12:
Pool to RB
6
3
1
Pathway 13:
RB to Environment
3
5
2
Pathway 14:
Environment to Control Room
5
8
2
Pathway 15:
Environment to Control Room'
5
8
2
Pathway 16:
Control Room to Environment
8
5
1
End of Plant Model File
Scenario Description Name:

Ref.

```
Plant Model Filename:

Source Term:
 1
 1   1.0000E+00
c:\ [Pathname]\1006fgrnmp1.inp
c:\ [Pathname]\bwr_dba.rft
 0.0000E+00
 1
 9.5000E-01   4.8500E-02   1.5000E-03   1.0000E+00
Overlying Pool:
 0
 0.0000E+00
 0
 0
 0
 0
Compartments:
 8
Compartment 1:
 0
 1
 1
 0.0000E+00
 10
 0.0000E+00   5.2895E+01
 3.0900E-02   1.9125E+01
 4.9630E-01   3.1616E+01
 5.2360E-01   2.2682E+01
 8.0030E-01   1.9849E+01
 1.9848E+00   4.9360E+00
 2.7268E+00   2.9750E+00
 4.2805E+00   2.0100E+00
 1.4990E+01   0.0000E+00
 7.2000E+02   0.0000E+00
 1
 0.0000E+00
 10
 0.0000E+00   2.0000E+01
 3.0900E-02   1.9125E+01
 4.9630E-01   2.0000E+01
 5.2360E-01   2.0000E+01
 8.0030E-01   1.9849E+01
 1.9848E+00   4.9360E+00
 2.7268E+00   2.9750E+00
 4.2805E+00   2.0100E+00
 1.4990E+01   0.0000E+00
 7.2000E+02   0.0000E+00
 1
 0.0000E+00
 0
 0
 0
 0
 0
Compartment 2:
```

Ref.

0
1
0
0
0
0
0
0
0
Compartment 3:
0
1
0
0
0
0
0
0
0
Compartment 4:
0
1
0
0
0
0
0
1
10
0.0000E+00 1.3540E+00
1.0200E-02 1.2460E+00
2.5960E-01 8.6000E-01
5.2900E-01 7.5200E-01
1.1778E+00 7.7700E-01
2.2108E+00 6.9100E-01
4.9520E+00 4.9800E-01
7.9948E+00 3.1700E-01
2.4047E+01 0.0000E+00
7.2000E+02 0.0000E+00
0
Compartment 5:
0
1
0
0
0
0
0
0
0
Compartment 6:
0
1
0
0
0

Ref.

0
0
0
0
Compartment 7:
0
1
0
0
0
0
0
0
0
Compartment 8:
0
1
0
0
0
0
0
0
0
Pathways:
16
Pathway 1:
0
0
0
0
0
0
0
0
0
0
1
2
0.0000E+00 0.0000E+00
2.0333E+00 1.4400E+05
0
Pathway 2:
0
0
0
0
0
0
0
0
0
0
1
2
0.0000E+00 0.0000E+00

Ref.

```
 2.0333E+00  2.1600E+05
 0
Pathway 3:
 0
 0
 0
 0
 0
 0
 0
 0
 0
 0
 1
 3
 0.0000E+00  0.0000E+00
 6.0000E+00  1.5000E+00
 2.4000E+01  7.5000E-01
 0
Pathway 4:
 0
 0
 0
 0
 0
 0
 0
 0
 0
 0
 1
 3
 0.0000E+00  0.0000E+00
 6.0000E+00  1.5000E+00
 2.4000E+01  7.5000E-01
 0
Pathway 5:
 0
 0
 0
 0
 0
 1
 2
 0.0000E+00  6.8400E-01  5.0000E+01  5.0000E+01  0.0000E+00
 2.4000E+01  3.4200E-01  5.0000E+01  5.0000E+01  0.0000E+00
 0
 0
 0
 0
 0
 0
Pathway 6:
 0
 0
 0
```

Ref.

0
0
0
0
0
0
0
1
2
0.0000E+00 1.5000E+00
6.0000E+00 0.0000E+00
0
Pathway 7:
0
0
0
0
0
0
0
0
0
0
1
2
0.0000E+00 1.5000E+00
6.0000E+00 0.0000E+00
0
Pathway 8:
0
0
1
2
0.0000E+00 1.0000E+00 7.9600E-01
2.4000E+01 1.0000E+00 3.9800E-01
1
2
0.0000E+00 1.0000E+00 7.9600E-01
2.4000E+01 1.0000E+00 3.9800E-01
1
2
0.0000E+00 1.0000E+00 7.9600E-01
2.4000E+01 1.0000E+00 3.9800E-01
0
0
0
0
0
0
0
Pathway 9:
0
0
1
2
0.0000E+00 1.0000E+00 2.8400E-01

Ref.

```
2.4000E+01  2.0000E+00  1.4200E-01
1
2
0.0000E+00  1.0000E+00  2.8400E-01
2.4000E+01  2.0000E+00  1.4200E-01
1
2
0.0000E+00  1.0000E+00  2.8400E-01
2.4000E+01  1.0000E+00  1.4200E-01
0
0
0
0
0
0
0
Pathway 10:
0
0
1
6
0.0000E+00  1.0000E+06  2.6700E+00
5.0000E-01  1.0000E+06  1.7400E+00
7.0000E-01  1.0000E+06  8.3000E-01
1.0000E+00  1.0000E+06  2.2000E-01
2.0333E+00  1.0000E+06  1.0000E-01
6.0000E+00  1.0000E+06  0.0000E+00
1
6
0.0000E+00  1.0000E+00  2.6700E+00
5.0000E-01  1.0000E+00  1.7400E+00
7.0000E-01  1.0000E+00  8.3000E-01
1.0000E+00  1.0000E+00  2.2000E-01
2.0333E+00  1.0000E+00  1.0000E-01
6.0000E+00  1.0000E+00  0.0000E+00
1
6
0.0000E+00  1.0000E+00  2.6700E+00
5.0000E-01  1.0000E+00  1.7400E+00
7.0000E-01  1.0000E+00  8.3000E-01
1.0000E+00  1.0000E+00  2.2000E-01
2.0333E+00  1.0000E+00  1.0000E-01
6.0000E+00  1.0000E+00  0.0000E+00
0
0
0
0
0
0
0
Pathway 11:
0
0
0
0
0
```

Ref.

```
1
6
0.0000E+00  0.0000E+00  9.9990E+01  9.0000E+01  9.0000E+01
5.0000E-01  9.3000E-01  9.9990E+01  9.0000E+01  9.0000E+01
7.0000E-01  1.8400E+00  9.9990E+01  9.0000E+01  9.0000E+01
1.0000E+00  2.4500E+00  9.9990E+01  9.0000E+01  9.0000E+01
2.0333E+00  2.5700E+00  9.9990E+01  9.0000E+01  9.0000E+01
6.0000E+00  0.0000E+00  9.9990E+00  9.0000E+01  9.0000E+01
0
0
0
0
0
0
Pathway 12:
0
0
1
2
0.0000E+00  1.0000E+06  0.0000E+00
6.0000E+00  1.0000E+06  2.6700E+00
1
2
0.0000E+00  1.0000E+00  0.0000E+00
6.0000E+00  1.0000E+00  2.6700E+00
1
2
0.0000E+00  1.0000E+00  0.0000E+00
6.0000E+00  1.0000E+00  2.6700E+00
0
0
0
0
0
0
0
Pathway 13:
0
0
0
0
0
1
1
0.0000E+00  1.6000E+03  9.5000E+01  9.5000E+01  9.0000E+01
0
0
0
0
0
0
Pathway 14:
0
0
0
0
```

Ref.

0
1
1
0.0000E+00 1.0000E+02 0.0000E+00 0.0000E+00 0.0000E+00
0
0
0
0
0
0
Pathway 15:
0
0
0
0
0
1
1
0.0000E+00 2.0250E+03 9.5000E+01 9.5000E+01 9.0000E+01
0
0
0
0
0
0
Pathway 16:
0
0
1
1
0.0000E+00 1.0000E+00 2.1250E+03
1
1
0.0000E+00 1.0000E+00 2.1250E+03
1
1
0.0000E+00 1.0000E+00 2.1250E+03
0
0
0
0
0
0
0
Dose Locations:
3
Location 1:
EAB
5
1
4
0.0000E+00 0.0000E+00
5.0000E-01 5.9800E-05
2.5000E+00 0.0000E+00
7.2000E+02 0.0000E+00
1

Project: Nine Mile Point Nuclear Station Unit: __1_ Disposition: ____

Originator/Date	Reviewer/Date	Calculation No.	Revision
J. Metcalf 12/12/06	D. Leaver 12/12/06	H21C092	00

Ref.

```
 4
 0.0000E+00  3.5000E-04
 8.0000E+00  1.8000E-04
 2.4000E+01  2.3000E-04
 7.2000E+02  0.0000E+00
 0
Location 2:
LPZ
 5
 1
 5
 0.0000E+00  1.2600E-06
 8.0000E+00  8.4000E-07
 2.4000E+01  3.4500E-07
 9.6000E+01  1.1100E-07
 7.2000E+02  0.0000E+00
 1
 4
 0.0000E+00  3.5000E-04
 8.0000E+00  1.8000E-04
 2.4000E+01  2.3000E-04
 7.2000E+02  0.0000E+00
 0
Location 3:
Control Room
 8
 0
 1
 2
 0.0000E+00  3.5000E-04
 7.2000E+02  0.0000E+00
 1
 4
 0.0000E+00  1.0000E+00
 2.4000E+01  6.0000E-01
 9.6000E+01  4.0000E-01
 7.2000E+02  0.0000E+00
Effective Volume Location:
 1
 7
 0.0000E+00  1.2600E-04
 5.0000E-01  1.2600E-04
 2.5000E+00  1.2600E-04
 8.0000E+00  4.3000E-05
 2.4000E+01  3.5800E-05
 9.6000E+01  2.5900E-05
 7.2000E+02  0.0000E+00
Simulation Parameters:
 1
 0.0000E+00  0.0000E+00
Output Filename:
C:\ [Pathname]\NMP1-Case 1Ac.o0
 1
 1
 1
 0
```

Project: Nine Mile Point Nuclear Station Unit: __1_ Disposition: ____

Originator/Date	Reviewer/Date	Calculation No.	Revision
J. Metcalf 12/12/06	D. Leaver 12/12/06	H21C092	00

Ref.

0
End of Scenario File

Ref.

Appendix D1.4: NMP1-Case 1Ad.psf (ESF-Temporary Bypass)

```
Radtrad 3.02 1/5/2000
 Case I for NMP1-MSIVs and Permanent Bypass
 Nuclide Inventory File:
 c:\ [Pathname]\nmp1.nif
 Plant Power Level:
  1.8870E+03
 Compartments:
  8
 Compartment 1:
 DW
  3
  1.8000E+05
  1
  0
  0
  0
  0
 Compartment 2:
 WW
  3
  1.2000E+05
  0
  0
  0
  0
  0
 Compartment 3:
 RB
  3
  1.0600E+06
  0
  0
  0
  0
  0
 Compartment 4:
 SL
  3
  1.6480E+02
  0
  0
  0
  1
  0
 Compartment 5:
 Environment
  2
  0.0000E+00
  0
  0
  0
  0
  0
```

Ref.

Compartment 6:
Pool
3
7.9700E+04
0
0
0
0
0
Compartment 7:
Dummy
3
1.0000E+00
0
0
0
0
0
Compartment 8:
Control Room
1
1.3500E+05
0
0
0
0
0
Pathways:
16
Pathway 1:
DW to WW
1
2
4
Pathway 2:
WW to DW
2
1
4
Pathway 3:
DW to RB
1
3
4
Pathway 4:
WW to RB
2
3
4
Pathway 5:
DW to SL
1
4
2
Pathway 6:
DW to Environment

Ref.

1
7
4
Pathway 7:
WW to Environment
2
7
4
Pathway 8:
SL to Environment
4
7
1
Pathway 9:
DW to Environment'
1
7
1
Pathway 10:
Pool to Environment
6
5
1
Pathway 11:
Pool to Environment'
6
7
2
Pathway 12:
Pool to RB
6
3
1
Pathway 13:
RB to Environment
3
7
2
Pathway 14:
Environment to Control Room
5
8
2
Pathway 15:
Environment to Control Room'
5
8
2
Pathway 16:
Control Room to Environment
8
5
1
End of Plant Model File
Scenario Description Name: _

Ref.

```
Plant Model Filename:

Source Term:
 1
 6  1.0000E+00
c:\ [Pathname]\1006fgrnmp1.inp
c:\ [Pathname]\bwr_idbl.rft
 0.0000E+00
 1
 9.5000E-01  4.8500E-02  1.5000E-03  1.0000E+00
Overlying Pool:
 0
 0.0000E+00
 0
 0
 0
 0
Compartments:
 8
Compartment 1:
 0
 1
 1
 0.0000E+00
 10
 0.0000E+00  5.2895E+01
 3.0900E-02  1.9125E+01
 4.9630E-01  3.1616E+01
 5.2360E-01  2.2682E+01
 8.0030E-01  1.9849E+01
 1.9848E+00  4.9360E+00
 2.7268E+00  2.9750E+00
 4.2805E+00  2.0100E+00
 1.4990E+01  0.0000E+00
 7.2000E+02  0.0000E+00
 1
 0.0000E+00
 10
 0.0000E+00  2.0000E+01
 3.0900E-02  1.9125E+01
 4.9630E-01  2.0000E+01
 5.2360E-01  2.0000E+01
 8.0030E-01  1.9849E+01
 1.9848E+00  4.9360E+00
 2.7268E+00  2.9750E+00
 4.2805E+00  2.0100E+00
 1.4990E+01  0.0000E+00
 7.2000E+02  0.0000E+00
 1
 0.0000E+00
 0
 0
 0
 0
 0
Compartment 2:
```

Ref.

0
1
0
0
0
0
0
0
0
0
Compartment 3:
0
1
0
0
0
0
0
0
0
0
Compartment 4:
0
1
0
0
0
0
0
1
10
0.0000E+00 1.3540E+00
1.0200E-02 1.2460E+00
2.5960E-01 8.6000E-01
5.2900E-01 7.5200E-01
1.1778E+00 7.7700E-01
2.2108E+00 6.9100E-01
4.9520E+00 4.9800E-01
7.9948E+00 3.1700E-01
2.4047E+01 0.0000E+00
7.2000E+02 0.0000E+00
0
Compartment 5:
0
1
0
0
0
0
0
0
0
0
Compartment 6:
0
1
0
0
0

Ref.

0
0
0
0
Compartment 7:
0
1
0
0
0
0
0
0
0
Compartment 8:
0
1
0
0
0
0
0
0
0
Pathways:
16
Pathway 1:
0
0
0
0
0
0
0
0
0
0
1
2
0.0000E+00 0.0000E+00
2.0333E+00 1.4400E+05
0
Pathway 2:
0
0
0
0
0
0
0
0
0
0
1
2
0.0000E+00 0.0000E+00

Ref.

```
 2.0333E+00  2.1600E+05
 0
Pathway 3:
 0
 0
 0
 0
 0
 0
 0
 0
 0
 0
 1
 3
 0.0000E+00  0.0000E+00
 6.0000E+00  1.5000E+00
 2.4000E+01  7.5000E-01
 0
Pathway 4:
 0
 0
 0
 0
 0
 0
 0
 0
 0
 0
 1
 3
 0.0000E+00  0.0000E+00
 6.0000E+00  1.5000E+00
 2.4000E+01  7.5000E-01
 0
Pathway 5:
 0
 0
 0
 0
 0
 1
 2
 0.0000E+00  6.8400E-01  5.0000E+01  5.0000E+01  0.0000E+00
 2.4000E+01  3.4200E-01  5.0000E+01  5.0000E+01  0.0000E+00
 0
 0
 0
 0
 0
 0
Pathway 6:
 0
 0
 0
```

Ref.

```
0
0
0
0
0
0
0
1
2
0.0000E+00  1.5000E+00
6.0000E+00  0.0000E+00
0
Pathway 7:
0
0
0
0
0
0
0
0
0
0
1
2
0.0000E+00  1.5000E+00
6.0000E+00  0.0000E+00
0
Pathway 8:
0
0
1
2
0.0000E+00  1.0000E+00  7.9600E-01
2.4000E+01  1.0000E+00  3.9800E-01
1
2
0.0000E+00  1.0000E+00  7.9600E-01
2.4000E+01  1.0000E+00  3.9800E-01
1
2
0.0000E+00  1.0000E+00  7.9600E-01
2.4000E+01  1.0000E+00  3.9800E-01
0
0
0
0
0
0
0
Pathway 9:
0
0
1
2
0.0000E+00  2.0000E+00  2.8400E-01
```

Ref.

```
2.4000E+01  2.0000E+00  1.4200E-01
1
2
0.0000E+00  2.0000E+00  2.8400E-01
2.4000E+01  2.0000E+00  1.4200E-01
1
2
0.0000E+00  1.0000E+00  2.8400E-01
2.4000E+01  1.0000E+00  1.4200E-01
0
0
0
0
0
0
0
Pathway 10:
0
0
1
6
0.0000E+00  1.0000E+06  2.6700E+00
5.0000E-01  1.0000E+06  1.7400E+00
7.0000E-01  1.0000E+06  8.3000E-01
1.0000E+00  1.0000E+06  2.2000E-01
2.0333E+00  1.0000E+06  1.0000E-01
6.0000E+00  1.0000E+06  0.0000E+00
1
6
0.0000E+00  1.0000E+00  2.6700E+00
5.0000E-01  1.0000E+00  1.7400E+00
7.0000E-01  1.0000E+00  8.3000E-01
1.0000E+00  1.0000E+00  2.2000E-01
2.0333E+00  1.0000E+00  1.0000E-01
6.0000E+00  1.0000E+00  0.0000E+00
1
6
0.0000E+00  1.0000E+00  2.6700E+00
5.0000E-01  1.0000E+00  1.7400E+00
7.0000E-01  1.0000E+00  8.3000E-01
1.0000E+00  1.0000E+00  2.2000E-01
2.0333E+00  1.0000E+00  1.0000E-01
6.0000E+00  1.0000E+00  0.0000E+00
0
0
0
0
0
0
0
Pathway 11:
0
0
0
0
0
```

Ref.

```
1
6
0.0000E+00  0.0000E+00  9.9990E+01  9.0000E+01  9.0000E+01
5.0000E-01  9.3000E-01  9.9990E+01  9.0000E+01  9.0000E+01
7.0000E-01  1.8400E+00  9.9990E+01  9.0000E+01  9.0000E+01
1.0000E+00  2.4500E+00  9.9990E+01  9.0000E+01  9.0000E+01
2.0333E+00  2.5700E+00  9.9990E+01  9.0000E+01  9.0000E+01
6.0000E+00  0.0000E+00  9.9990E+00  9.0000E+01  9.0000E+01
0
0
0
0
0
0
Pathway 12:
0
0
1
2
0.0000E+00  1.0000E+06  0.0000E+00
6.0000E+00  1.0000E+06  2.6700E+00
1
2
0.0000E+00  1.0000E+00  0.0000E+00
6.0000E+00  1.0000E+00  2.6700E+00
1
2
0.0000E+00  1.0000E+00  0.0000E+00
6.0000E+00  1.0000E+00  2.6700E+00
0
0
0
0
0
0
0
Pathway 13:
0
0
0
0
0
1
1
0.0000E+00  1.6000E+03  9.5000E+01  9.5000E+01  9.0000E+01
0
0
0
0
0
0
Pathway 14:
0
0
0
0
```

Ref.

0
1
1
0.0000E+00 1.0000E+02 0.0000E+00 0.0000E+00 0.0000E+00
0
0
0
0
0
0
Pathway 15:
0
0
0
0
0
1
1
0.0000E+00 2.0250E+03 9.5000E+01 9.5000E+01 9.0000E+01
0
0
0
0
0
0
Pathway 16:
0
0
1
1
0.0000E+00 1.0000E+00 2.1250E+03
1
1
0.0000E+00 1.0000E+00 2.1250E+03
1
1
0.0000E+00 1.0000E+00 2.1250E+03
0
0
0
0
0
0
0
Dose Locations:
3
Location 1:
EAB
5
1
4
0.0000E+00 0.0000E+00
5.0000E-01 1.9000E-04
2.5000E+00 0.0000E+00
7.2000E+02 0.0000E+00
1

Ref.

```
 4
 0.0000E+00  3.5000E-04
 8.0000E+00  1.8000E-04
 2.4000E+01  2.3000E-04
 7.2000E+02  0.0000E+00
 0
Location 2:
LPZ
 5
 1
 5
 0.0000E+00  1.6300E-05
 8.0000E+00  1.1000E-05
 2.4000E+01  4.6700E-06
 9.6000E+01  1.3700E-06
 7.2000E+02  0.0000E+00
 1
 4
 0.0000E+00  3.5000E-04
 8.0000E+00  1.8000E-04
 2.4000E+01  2.3000E-04
 7.2000E+02  0.0000E+00
 0
Location 3:
Control Room
 8
 0
 1
 2
 0.0000E+00  3.5000E-04
 7.2000E+02  0.0000E+00
 1
 4
 0.0000E+00  1.0000E+00
 2.4000E+01  6.0000E-01
 9.6000E+01  4.0000E-01
 7.2000E+02  0.0000E+00
Effective Volume Location:
 1
 7
 0.0000E+00  2.6100E-04
 5.0000E-01  4.8200E-04
 2.5000E+00  2.6100E-04
 8.0000E+00  9.2500E-05
 2.4000E+01  6.7000E-05
 9.6000E+01  4.9300E-05
 7.2000E+02  0.0000E+00
Simulation Parameters:
 1
 0.0000E+00  0.0000E+00
Output Filename:
C:\ [Pathname]\NMP1-Case 1Ad.o0
 1
 1
 1
 0
```

Project: Nine Mile Point Nuclear Station Unit: __1_ Disposition: ____

Originator/Date	Reviewer/Date	Calculation No.	Revision
J. Metcalf 12/12/06	D. Leaver 12/12/06	H21C092	00

Ref.

0
End of Scenario File

Ref.

Appendix D1.5: NMP1-Case 1Ae.psf (ESF- Stack Release)

```
Radtrad 3.02 1/5/2000
Case 1A for NMP1-MSIVs and Permanent Bypass
Nuclide Inventory File:
c:\ [Pathname]\nmp1.nif
Plant Power Level:
 1.8870E+03
Compartments:
 8
Compartment 1:
DW
 3
 1.8000E+05
 1
 0
 0
 0
 0
Compartment 2:
WW
 3
 1.2000E+05
 0
 0
 0
 0
 0
Compartment 3:
RB
 3
 1.0600E+06
 0
 0
 0
 0
 0
Compartment 4:
SL
 3
 1.6480E+02
 0
 0
 0
 1
 0
Compartment 5:
Environment
 2
 0.0000E+00
 0
 0
 0
 0
```

Ref.

0
Compartment 6:
Pool
3
7.9700E+04
0
0
0
0
0
Compartment 7:
Dummy
3
1.0000E+00
0
0
0
0
0
Compartment 8:
Control Room
1
1.3500E+05
0
0
0
0
0
Pathways:
16
Pathway 1:
DW to WW
1
2
4
Pathway 2:
WW to DW
2
1
4
Pathway 3:
DW to RB
1
3
4
Pathway 4:
WW to RB
2
3
4
Pathway 5:
DW to SL
1
4
2
Pathway 6:

Ref.

DW to Environment
1
7
4
Pathway 7:
WW to Environment
2
7
4
Pathway 8:
SL to Environment
4
7
1
Pathway 9:
DW to Environment'
1
7
1
Pathway 10:
Pool to Environment
6
7
1
Pathway 11:
Pool to Environment'
6
5
2
Pathway 12:
Pool to RB
6
3
1
Pathway 13:
RB to Environment
3
5
2
Pathway 14:
Environment to Control Room
5
8
2
Pathway 15:
Environment to Control Room'
5
8
2
Pathway 16:
Control Room to Environment
8
5
1
End of Plant Model File
Scenario Description Name:

Ref.

```
Plant Model Filename:

Source Term:
 1
 6  1.0000E+00
c:\ [Pathname]\1006fgrnmp1.inp
c:\ [Pathname]\bwr_idbl.rft
 0.0000E+00
 1
 9.5000E-01  4.8500E-02  1.5000E-03  1.0000E+00
Overlying Pool:
 0
 0.0000E+00
 0
 0
 0
 0
Compartments:
 8
Compartment 1:
 0
 1
 1
 0.0000E+00
 10
 0.0000E+00  5.2895E+01
 3.0900E-02  1.9125E+01
 4.9630E-01  3.1616E+01
 5.2360E-01  2.2682E+01
 8.0030E-01  1.9849E+01
 1.9848E+00  4.9360E+00
 2.7268E+00  2.9750E+00
 4.2805E+00  2.0100E+00
 1.4990E+01  0.0000E+00
 7.2000E+02  0.0000E+00
 1
 0.0000E+00
 10
 0.0000E+00  2.0000E+01
 3.0900E-02  1.9125E+01
 4.9630E-01  2.0000E+01
 5.2360E-01  2.0000E+01
 8.0030E-01  1.9849E+01
 1.9848E+00  4.9360E+00
 2.7268E+00  2.9750E+00
 4.2805E+00  2.0100E+00
 1.4990E+01  0.0000E+00
 7.2000E+02  0.0000E+00
 1
 0.0000E+00
 0
 0
 0
 0
 0
```

Ref.

Compartment 2:
0
1
0
0
0
0
0
0
0
Compartment 3:
0
1
0
0
0
0
0
0
0
Compartment 4:
0
1
0
0
0
0
0
1
10
0.0000E+00 1.3540E+00
1.0200E-02 1.2460E+00
2.5960E-01 8.6000E-01
5.2900E-01 7.5200E-01
1.1778E+00 7.7700E-01
2.2108E+00 6.9100E-01
4.9520E+00 4.9800E-01
7.9948E+00 3.1700E-01
2.4047E+01 0.0000E+00
7.2000E+02 0.0000E+00
0
Compartment 5:
0
1
0
0
0
0
0
0
0
Compartment 6:
0
1
0
0

Ref.

0
0
0
0
0
Compartment 7:
0
1
0
0
0
0
0
0
0
Compartment 8:
0
1
0
0
0
0
0
0
0
Pathways:
16
Pathway 1:
0
0
0
0
0
0
0
0
0
0
1
2
0.0000E+00 0.0000E+00
2.0333E+00 1.4400E+05
0
Pathway 2:
0
0
0
0
0
0
0
0
0
0
1
2

Ref.

```
 0.0000E+00  0.0000E+00
 2.0333E+00  2.1600E+05
 0
Pathway 3:
 0
 0
 0
 0
 0
 0
 0
 0
 0
 0
 1
 3
 0.0000E+00  0.0000E+00
 6.0000E+00  1.5000E+00
 2.4000E+01  7.5000E-01
 0
Pathway 4:
 0
 0
 0
 0
 0
 0
 0
 0
 0
 0
 1
 3
 0.0000E+00  0.0000E+00
 6.0000E+00  1.5000E+00
 2.4000E+01  7.5000E-01
 0
Pathway 5:
 0
 0
 0
 0
 0
 1
 2
 0.0000E+00  6.8400E-01  5.0000E+01  5.0000E+01  0.0000E+00
 2.4000E+01  3.4200E-01  5.0000E+01  5.0000E+01  0.0000E+00
 0
 0
 0
 0
 0
 0
Pathway 6:
 0
 0
```

Ref.

```
 0
 0
 0
 0
 0
 0
 0
 0
 1
 2
 0.0000E+00  1.5000E+00
 6.0000E+00  0.0000E+00
 0
Pathway 7:
 0
 0
 0
 0
 0
 0
 0
 0
 0
 0
 1
 2
 0.0000E+00  1.5000E+00
 6.0000E+00  0.0000E+00
 0
Pathway 8:
 0
 0
 1
 2
 0.0000E+00  1.0000E+00  7.9600E-01
 2.4000E+01  1.0000E+00  3.9800E-01
 1
 2
 0.0000E+00  1.0000E+00  7.9600E-01
 2.4000E+01  1.0000E+00  3.9800E-01
 1
 2
 0.0000E+00  1.0000E+00  7.9600E-01
 2.4000E+01  1.0000E+00  3.9800E-01
 0
 0
 0
 0
 0
 0
 0
Pathway 9:
 0
 0
 1
 2
```

Ref.

```
0.0000E+00  2.0000E+00  2.8400E-01
2.4000E+01  2.0000E+00  1.4200E-01
1
2
0.0000E+00  2.0000E+00  2.8400E-01
2.4000E+01  2.0000E+00  1.4200E-01
1
2
0.0000E+00  1.0000E+00  2.8400E-01
2.4000E+01  1.0000E+00  1.4200E-01
0
0
0
0
0
0
0
Pathway 10:
0
0
1
6
0.0000E+00  1.0000E+06  2.6700E+00
5.0000E-01  1.0000E+06  1.7400E+00
7.0000E-01  1.0000E+06  8.3000E-01
1.0000E+00  1.0000E+06  2.2000E-01
2.0333E+00  1.0000E+06  1.0000E-01
6.0000E+00  1.0000E+06  0.0000E+00
1
6
0.0000E+00  1.0000E+00  2.6700E+00
5.0000E-01  1.0000E+00  1.7400E+00
7.0000E-01  1.0000E+00  8.3000E-01
1.0000E+00  1.0000E+00  2.2000E-01
2.0333E+00  1.0000E+00  1.0000E-01
6.0000E+00  1.0000E+00  0.0000E+00
1
6
0.0000E+00  1.0000E+00  2.6700E+00
5.0000E-01  1.0000E+00  1.7400E+00
7.0000E-01  1.0000E+00  8.3000E-01
1.0000E+00  1.0000E+00  2.2000E-01
2.0333E+00  1.0000E+00  1.0000E-01
6.0000E+00  1.0000E+00  0.0000E+00
0
0
0
0
0
0
0
Pathway 11:
0
0
0
0
```

Ref.

```
0
1
6
0.0000E+00  0.0000E+00  9.9990E+01  9.5000E+01  9.0000E+01
5.0000E-01  9.3000E-01  9.9990E+01  9.5000E+01  9.0000E+01
7.0000E-01  1.8400E+00  9.9990E+01  9.5000E+01  9.0000E+01
1.0000E+00  2.4500E+00  9.9990E+01  9.5000E+01  9.0000E+01
2.0333E+00  2.5700E+00  9.9990E+01  9.5000E+01  9.0000E+01
6.0000E+00  0.0000E+00  9.9990E+00  9.5000E+01  9.0000E+01
0
0
0
0
0
0
Pathway 12:
0
0
1
2
0.0000E+00  1.0000E+06  0.0000E+00
6.0000E+00  1.0000E+06  2.6700E+00
1
2
0.0000E+00  1.0000E+00  0.0000E+00
6.0000E+00  1.0000E+00  2.6700E+00
1
2
0.0000E+00  1.0000E+00  0.0000E+00
6.0000E+00  1.0000E+00  2.6700E+00
0
0
0
0
0
0
0
Pathway 13:
0
0
0
0
0
1
1
0.0000E+00  1.6000E+03  9.5000E+01  9.5000E+01  9.0000E+01
0
0
0
0
0
0
Pathway 14:
0
0
0
```

Ref.

```
 0
 0
 1
 1
 0.0000E+00  1.0000E+02  0.0000E+00  0.0000E+00 .0.0000E+00
 0
 0
 0
 0
 0
 0
Pathway 15:
 0
 0
 0
 0
 0
 1
 1
 0.0000E+00  2.0250E+03  9.5000E+01  9.5000E+01  9.0000E+01
 0
 0
 0
 0
 0
 0
Pathway 16:
 0
 0
 1
 1
 0.0000E+00  1.0000E+00  2.1250E+03
 1
 1
 0.0000E+00  1.0000E+00  2.1250E+03
 1
 1
 0.0000E+00  1.0000E+00  2.1250E+03
 0
 0
 0
 0
 0
 0
 0
Dose Locations:
 3
Location 1:
EAB
 5
 1
 4
 0.0000E+00  0.0000E+00
 5.0000E-01  5.9800E-05
 2.5000E+00  0.0000E+00
 7.2000E+02  0.0000E+00
```

Ref.

```
 1
 4
 0.0000E+00  3.5000E-04
 8.0000E+00  1.8000E-04
 2.4000E+01  2.3000E-04
 7.2000E+02  0.0000E+00
 0
Location 2:
LPZ
 5
 1
 5
 0.0000E+00  1.2600E-06
 8.0000E+00  8.4000E-07
 2.4000E+01  3.4500E-07
 9.6000E+01  1.1100E-07
 7.2000E+02  0.0000E+00
 1
 4
 0.0000E+00  3.5000E-04
 8.0000E+00  1.8000E-04
 2.4000E+01  2.3000E-04
 7.2000E+02  0.0000E+00
 0
Location 3:
Control Room
 8
 0
 1
 2
 0.0000E+00  3.5000E-04
 7.2000E+02  0.0000E+00
 1
 4
 0.0000E+00  1.0000E+00
 2.4000E+01  6.0000E-01
 9.6000E+01  4.0000E-01
 7.2000E+02  0.0000E+00
Effective Volume Location:
 1
 7
 0.0000E+00  1.2600E-04
 5.0000E-01  1.2600E-04
 2.5000E+00  1.2600E-04
 8.0000E+00  4.3000E-05
 2.4000E+01  3.5800E-05
 9.6000E+01  2.5900E-05
 7.2000E+02  0.0000E+00
Simulation Parameters:
 1
 0.0000E+00  0.0000E+00
Output Filename:
C:\ [Pathname]\NMP1-Case 1Ae.o0
 1
 1
 1
```

Project: Nine Mile Point Nuclear Station Unit: __1_ Disposition: ____

Originator/Date	Reviewer/Date	Calculation No.	Revision
J. Metcalf 12/12/06	D. Leaver 12/12/06	H21C092	00

Ref.

0
0
End of Scenario File

Ref.

Appendix D2: Secondary Input Files for Case 1A (LIMITING CASE: Core Spray Division Electrical Failure)
Appendix D2.1: Nuclide Information File (.nif) nmp1.nif

```
Nuclide Inventory Name:
 ST general
 Power Level:
  0.1000E+01
 Nuclides:
  63
 Nuclide 001:
 Kr-83m
   1
  0.6696E+04
  0.8300E+02
  3.270E+03
 none    0.0000E+00
 none    0.0000E+00
 none    0.0000E+00
 Nuclide 002:
 Kr-85m
   1
  0.1612800000E+05
  0.8500E+02
  6.82E+03
 Kr-85   0.2100E+00
 none    0.0000E+00
 none    0.0000E+00
 Nuclide 003:
 Kr-85
   1
  0.338613048E+09
  0.8500E+02
  3.93E+02
 none    0.0000E+00
 none    0.0000E+00
 none    0.0000E+00
 Nuclide 004:
 Kr-87
   1
  0.4578000000E+04
  0.8700E+02
  1.30E+04
 Rb-87   0.1000E+01
 none    0.0000E+00
 none    0.0000E+00
 Nuclide 005:
 Kr-88
   1
  0.1022400000E+05
  0.8800E+02
  1.83E+04
 Rb-88   0.1000E+01
 none    0.0000E+00
```

Ref.

```
none    0.0000E+00
Nuclide 006:
Rb-86
 3
 0.1612224000E+07
 0.8600E+02
 0.729E+02
none    0.0000E+00
none    0.0000E+00
none    0.0000E+00
Nuclide 007:
Rb-88
 3
 0.1062000000E+04
 0.8800E+02
 1.000E-06
none    0.0000E+00
none    0.0000E+00
none    0.0000E+00
Nuclide 008:
Sr-89
 5
 0.4363200000E+07
 0.8900E+02
 2.45E+04
none    0.0000E+00
none    0.0000E+00
none    0.0000E+00
Nuclide 009:
Sr-90
 5
 0.9189573120E+09
 0.9000E+02
 3.14E+03
Y-90    0.1000E+01
none    0.0000E+00
none    0.0000E+00
Nuclide 010:
Sr-91
 5
 0.3420000000E+05
 0.9100E+02
 3.10E+04
Y-91m   0.5800E+00
Y-91    0.4200E+00
none    0.0000E+00
Nuclide 011:
Sr-92
 5
 0.9756000000E+04
 0.9200E+02
 3.38E+04
Y-92    0.1000E+01
none    0.0000E+00
none    0.0000E+00
Nuclide 012:
```

Ref.

```
Y-90
 7
 0.2304000000E+06
 0.9000E+02
 3.24E+03
none    0.0000E+00
none    0.0000E+00
none    0.0000E+00
Nuclide 013:
Y-91
 7
 0.5055264000E+07
 0.9100E+02
 3.18E+04
none    0.0000E+00
none    0.0000E+00
none    0.0000E+00
Nuclide 014:
Y-92
 7
 0.1274400000E+05
 0.9200E+02
 3.40E+04
none    0.0000E+00
none    0.0000E+00
none    0.0000E+00
Nuclide 015:
Y-93
 7
 0.3636000000E+05
 0.9300E+02
 3.96E+04
Zr-93   0.1000E+01
none    0.0000E+00
none    0.0000E+00
Nuclide 016:
Zr-95
 7
 0.5527872000E+07
 0.9500E+02
 4.46E+04
Nb-95m  0.7000E-02
Nb-95   0.9900E+00
none    0.0000E+00
Nuclide 017:
Zr-97
 7
 0.6084000000E+05
 0.9700E+02
 4.51E+04
Nb-97m  0.9500E+00
Nb-97   0.5300E-01
none    0.0000E+00
Nuclide 018:
Nb-95
 7
```

Ref.

0.3036960000E+07
0.9500E+02
4.48E+04
none 0.0000E+00
none 0.0000E+00
none 0.0000E+00
Nuclide 019:
Mo-99
6
0.2376000000E+06
0.9900E+02
5.13E+04
Tc-99m 0.8800E+00
Tc-99 0.1200E+00
none 0.0000E+00
Nuclide 020:
Tc-99m
6
0.2167200000E+05
0.9900E+02
4.49E+04
Tc-99 0.1000E+01
none 0.0000E+00
none 0.0000E+00
Nuclide 021:
Ru-103
6
0.3393792000E+07
0.1030E+03
4.29E+04
Rh-103m 0.1000E+01
none 0.0000E+00
none 0.0000E+00
Nuclide 022:
Ru-105
6
0.1598400000E+05
0.1050E+03
3.01E+04
Rh-105 0.1000E+01
none 0.0000E+00
none 0.0000E+00
Nuclide 023:
Ru-106
6
0.3181248000E+08
0.1060E+03
1.76E+04
Rh-106 0.1000E+01
none 0.0000E+00
none 0.0000E+00
Nuclide 024:
Rh-105
6
0.1272960000E+06
0.1050E+03

Ref.

2.84E+04
none 0.0000E+00
none 0.0000E+00
none 0.0000E+00
Nuclide 025:
Sb-127
4
0.3326400000E+06
0.1270E+03
3.01E+03
Te-127m 0.1800E+00
Te-127 0.8200E+00
none 0.0000E+00
Nuclide 026:
Sb-129
4
0.1555200000E+05
0.1290E+03
0.891E+04
Te-129m 0.2200E+00
Te-129 0.7700E+00
none 0.0000E+00
Nuclide 027:
Te-127
4
0.3366000000E+05
0.1270E+03
3.00E+03
none 0.0000E+00
none 0.0000E+00
none 0.0000E+00
Nuclide 028:
Te-127m
4
0.9417600000E+07
0.1270E+03
4.05E+02
Te-127 0.9800E+00
none 0.0000E+00
none 0.0000E+00
Nuclide 029:
Te-129
4
0.4176000000E+04
0.1290E+03
8.76E+03
I-129 0.1000E+01
none 0.0000E+00
none 0.0000E+00
Nuclide 030:
Te-129m
4
0.2903040000E+07
0.1290E+03
1.30E+03
Te-129 0.6500E+00

Ref.

```
I-129   0.3500E+00
none    0.0000E+00
Nuclide 031:
Te-131m
 4
 0.1080000000E+06
 0.1310E+03
 3.97E+03
Te-131  0.2200E+00
I-131   0.7800E+00
none    0.0000E+00
Nuclide 032:
Te-132
 4
 0.2815200000E+06
 0.1320E+03
 3.85E+04
I-132   0.1000E+01
none    0.0000E+00
none    0.0000E+00
Nuclide 033:
I-131
 2
 0.6946560000E+06
 0.1310E+03
 2.71E+04
Xe-131m 0.1100E-01
none    0.0000E+00
none    0.0000E+00
Nuclide 034:
I-132
 2
 0.8280000000E+04
 0.1320E+03
 3.92E+04
none    0.0000E+00
none    0.0000E+00
none    0.0000E+00
Nuclide 035:
I-133
 2
 0.7488000000E+05
 0.1330E+03
 5.51E+04
Xe-133m 0.2900E-01
Xe-133  0.9700E+00
none    0.0000E+00
Nuclide 036:
I-134
 2
 0.3156000000E+04
 0.1340E+03
 6.03E+04
none    0.0000E+00
none    0.0000E+00
none    0.0000E+00
```

Ref.

```
Nuclide 037:
I-135
 2
 0.2379600000E+05
 0.1350E+03
 5.16E+04
Xe-135m  0.1500E+00
Xe-135   0.8500E+00
none     0.0000E+00
Nuclide 038:
Xe-133
 1
 0.4531680000E+06
 0.1330E+03
 5.27E+04
none     0.0000E+00
none     0.0000E+00
none     0.0000E+00
Nuclide 039:
Xe-133m
 1
 0.1926720000E+06
 0.1330E+03
 1.63E+03
Xe-133   0.1000E+01
none     0.0000E+00
none     0.0000E+00
Nuclide 040:
Xe-135
 1
 0.3272400000E+05
 0.1350E+03
 1.91E+04
Cs-135   0.1000E+01
none     0.0000E+00
none     0.0000E+00
Nuclide 041:
Xe-135m
 1
 0.91800000E+03
 0.1350E+03
 1.09E+04
Xe-135   0.9940E+00
Cs-135   0.6000E-03
none     0.0000E+00
Nuclide 042:
Xe-138
 1
 0.85200000E+03
 0.1380E+03
 4.50E+04
none     0.0000E+00
none     0.0000E+00
none     0.0000E+00
Nuclide 043:
Cs-134
```

Ref.

3
0.6507177120E+08
0.1340E+03
7.29E+03
none 0.0000E+00
none 0.0000E+00
none 0.0000E+00
Nuclide 044:
Cs-136
3
0.1131840000E+07
0.1360E+03
2.28E+03
none 0.0000E+00
none 0.0000E+00
none 0.0000E+00
Nuclide 045:
Cs-137
3
0.9467280000E+09
0.1370E+03
4.35E+03
Ba-137m 0.9500E+00
none 0.0000E+00
none 0.0000E+00
Nuclide 046:
Ba-139
5
0.4962000000E+04
0.1390E+03
4.89E+04
none 0.0000E+00
none 0.0000E+00
none 0.0000E+00
Nuclide 047:
Ba-140
5
0.1100736000E+07
0.1400E+03
4.71E+04
La-140 0.1000E+01
none 0.0000E+00
none 0.0000E+00
Nuclide 048:
La-140
7
0.1449792000E+06
0.1400E+03
5.12E+04
none 0.0000E+00
none 0.0000E+00
none 0.0000E+00
Nuclide 049:
La-141
9
0.1414800000E+05

Ref.

0.1410E+03
4.45E+04
Ce-141 0.1000E+01
none 0.0000E+00
none 0.0000E+00
Nuclide 050:
La-142
7
0.5550000000E+04
0.1420E+03
4.29E+04
none 0.0000E+00
none 0.0000E+00
none 0.0000E+00
Nuclide 051:
Ce-141
8
0.2808086400E+07
0.1410E+03
4.47E+04
none 0.0000E+00
none 0.0000E+00
none 0.0000E+00
Nuclide 052:
Ce-143
8
0.1188000000E+06
0.1430E+03
4.11E+04
Pr-143 0.1000E+01
none 0.0000E+00
none 0.0000E+00
Nuclide 053:
Ce-144
8
0.2456352000E+08
0.1440E+03
3.70E+04
Pr-144m 0.1800E-01
Pr-144 0.9800E+00
none 0.0000E+00
Nuclide 054:
Pr-143
9
0.1171584000E+07
0.1430E+03
3.97E+04
none 0.0000E+00
none 0.0000E+00
none 0.0000E+00
Nuclide 055:
Nd-147
9
0.9486720000E+06
0.1470E+03
1.80E+04

Ref.

Pm-147 0.1000E+01
none 0.0000E+00
none 0.0000E+00
Nuclide 056:
Np-239
8
0.2034720000E+06
0.2390E+03
5.78E+05
Pu-239 0.1000E+01
none 0.0000E+00
none 0.0000E+00
Nuclide 057:
Pu-238
8
0.2768863824E+10
0.2380E+03
1.45E+02
U-234 0.1000E+01
none 0.0000E+00
none 0.0000E+00
Nuclide 058:
Pu-239
8
0.7594336440E+12
0.2390E+03
1.34E+01
U-235 0.1000E+01
none 0.0000E+00
none 0.0000E+00
Nuclide 059:
Pu-240
8
0.2063867E+11
0.240E+03
1.89E+01
U-236 0.1000E+01
none 0.0000E+00
none 0.0000E+00
Nuclide 060:
Pu-241
8
0.473364E+09
0.241E+03
5.49E+03
Am-241 0.1000E+01
none 0.0000E+00
none 0.0000E+00
Nuclide 061:
Am-241
7
0.13664441E+11
0.241E+03
7.48E+00
Np-237 0.1000E+01
none 0.0000E+00

Ref.

```
 none    0.0000E+00
Nuclide 062:
 Cm-242
  7
 0.14083200E+08
 0.242E+03
 1.85E+03
 Pu-238  0.1000E+01
 none    0.0000E+00
 none    0.0000E+00
Nuclide 063:
 Cm-244
  7
 0.56488104E+09
 0.244E+03
 1.23E+02
 Pu-240  0.1000E+01
 none    0.0000E+00
 none    0.0000E+00
End of Nuclear Inventory File
```

Ref.

Appendix D2.2: Release Fraction File (.rft) BWR_DBA.rft

Release Fraction and Timing Name:
BWR, NUREG-1465, Tables 3.11 & 3.13, June 1992
Duration (h): Design Basis Accident
0.5000E+00 0.1500E+01 0.0000E+00 0.0000E+00
Noble Gases:
0.5000E-01 0.9500E+00 0.0000E+00 0.0000E+00
Iodine:
0.5000E-01 0.2500E+00 0.0000E+00 0.0000E+00
Cesium:
0.5000E-01 0.2000E+00 0.0000E+00 0.0000E+00
Tellurium:
0.0000E+00 0.0500E+00 0.0000E+00 0.0000E+00
Strontium:
0.0000E+00 0.2000E-01 0.0000E+00 0.0000E+00
Barium:
0.0000E+00 0.2000E-01 0.0000E+00 0.0000E+00
Ruthenium:
0.0000E+00 0.2500E-02 0.0000E+00 0.0000E+00
Cerium:
0.0000E+00 0.5000E-03 0.0000E+00 0.0000E+00
Lanthanum:
0.0000E+00 0.2000E-03 0.0000E+00 0.0000E+00
Non-Radioactive Aerosols (kg):
0.0000E+00 0.0000E+00 0.0000E+00 0.0000E+00
End of Release File

Appendix D2.3: Release Fraction File (.rft) BWR_Idbl.rft

Release Fraction and Timing Name: Iodine only
NUREG 1465 BWR
Duration (h):
0.5000E+00 1.5000E+00 0.0000E+00 0.0000E+00
Noble Gases:
0.0000E+00 0.0000E+00 0.0000E+00 0.0000E+00
Iodine:
0.1000E+00 0.5000E+00 0.0000E+00 0.0000E+00
Cesium:
0.0000E+00 0.0000E+00 0.0000E+00 0.0000E+00
Tellurium:
0.0000E+00 0.0000E+00 0.0000E+00 0.0000E+00
Strontium:
0.0000E+00 0.0000E+00 0.0000E+00 0.0000E+00
Barium:
0.0000E+00 0.0000E+00 0.0000E+00 0.0000E+00
Ruthenium:
0.0000E+00 0.0000E+00 0.0000E+00 0.0000E+00
Cerium:
0.0000E+00 0.0000E+00 0.0000E+00 0.0000E+00
Lanthanum:
0.0000E+00 0.0000E+00 0.0000E+00 0.0000E+00
Non-Radioactive Aerosols (kg):
0.0000E+00 0.0000E+00 0.0000E+00 0.0000E+00
End of Release File

Ref.

Appendix D2.4: Dose Conversion Factor File (.inp) 1006fgrnmp1.inp

```
FGRDCF 10/24/95  03:24:50  beta-test version 1.10, minor FORTRAN fixes 5/4/95
Implicit daughter halflives (m) less than  90 and less than 0.100 of parent
     9 ORGANS DEFINED IN THIS FILE:
GONADS
BREAST
LUNGS
RED MARR
BONE SUR
THYROID
REMAINDER
EFFECTIVE
SKIN(FGR)
     63 NUCLIDES DEFINED IN THIS FILE:
Kr-83m
Kr-85m
Kr-85
Kr-87
Kr-88
Rb-86    D
Rb-88    D
Sr-89    Y
Sr-90    Y
Sr-91    Y    Including:Y-91m
Sr-92    Y
Y-90     Y
Y-91     Y
Y-92     Y
Y-93     Y
Zr-95    D
Zr-97    Y    Including:Nb-97m , Including:Nb-97
Nb-95    Y
Mo-99    Y
Tc-99m   D
Ru-103   Y    Including:Rh-103m
Ru-105   Y
Ru-106   Y    Including:Rh-106
Rh-105   Y
Sb-127   W
Sb-129   W
Te-127   W
Te-127m  W
Te-129   W
Te-129m  W    Including:Te-129
Te-131m  W    Including:Te-131
Te-132   W
I-131    D
I-132    D
I-133    D
I-134    D
I-135    D    Including:Xe-135m
Xe-133
Xe-133m
Xe-135
```

Ref.

Xe-135m
Xe-138
Cs-134 D
Cs-136 D
Cs-137 D Including:Ba-137m
Ba-139 D
Ba-140 D
La-140 W
La-141 D
La-142 D
Ce-141 Y
Ce-143 Y
Ce-144 Y Including:Pr-144m, Including:Pr-144
Pr-143 Y
Nd-147 Y
Np-239 W
Pu-238 Y
Pu-239 Y
Pu-240
Pu-241
Am-241
Cm-242
Cm-244

	CLOUDSHINE	GROUND SHINE 8HR	GROUND SHINE 7DAY	GROUND SHINE RATE	INHALED ACUTE	INHALED CHRONIC	INGESTION
Kr-83m							
GONADS	1.710E-18	5.572E-15	5.855E-15	6.160E-19	-1.000E+00	0.000E+00	0.000E+00
BREAST	5.050E-18	9.498E-15	9.980E-15	1.050E-18	-1.000E+00	0.000E+00	0.000E+00
LUNGS	1.640E-19	1.266E-16	1.331E-16	1.400E-20	-1.000E+00	0.000E+00	0.000E+00
RED MARR	3.830E-19	5.617E-16	5.902E-16	6.210E-20	-1.000E+00	0.000E+00	0.000E+00
BONE SUR	2.250E-18	3.437E-15	3.612E-15	3.800E-19	-1.000E+00	0.000E+00	0.000E+00
THYROID	6.430E-19	7.698E-16	8.088E-16	8.510E-20	-1.000E+00	0.000E+00	0.000E+00
REMAINDER	5.300E-19	1.393E-15	1.464E-15	1.540E-19	-1.000E+00	0.000E+00	0.000E+00
EFFECTIVE	1.500E-18	3.437E-15	3.612E-15	3.800E-19	-1.000E+00	0.000E+00	0.000E+00
SKIN(FGR)	3.560E-17	1.167E-13	1.226E-13	1.290E-17	-1.000E+00	0.000E+00	0.000E+00
Kr-85m							
GONADS	7.310E-15	2.594E-12	3.653E-12	1.570E-16	-1.000E+00	0.000E+00	0.000E+00
BREAST	8.410E-15	2.527E-12	3.560E-12	1.530E-16	-1.000E+00	0.000E+00	0.000E+00
LUNGS	7.040E-15	2.379E-12	3.351E-12	1.440E-16	-1.000E+00	0.000E+00	0.000E+00
RED MARR	6.430E-15	2.346E-12	3.304E-12	1.420E-16	-1.000E+00	0.000E+00	0.000E+00
BONE SUR	1.880E-14	5.286E-12	7.446E-12	3.200E-16	-1.000E+00	0.000E+00	0.000E+00
THYROID	7.330E-15	2.395E-12	3.374E-12	1.450E-16	-1.000E+00	0.000E+00	0.000E+00
REMAINDER	6.640E-15	2.313E-12	3.257E-12	1.400E-16	-1.000E+00	0.000E+00	0.000E+00
EFFECTIVE	7.480E-15	2.511E-12	3.537E-12	1.520E-16	-1.000E+00	0.000E+00	0.000E+00
SKIN(FGR)	2.240E-14	2.247E-11	3.164E-11	1.360E-15	-1.000E+00	0.000E+00	0.000E+00
Kr-85							
GONADS	1.170E-16	8.121E-14	1.704E-12	2.820E-18	-1.000E+00	0.000E+00	0.000E+00
BREAST	1.340E-16	7.891E-14	1.656E-12	2.740E-18	-1.000E+00	0.000E+00	0.000E+00
LUNGS	1.140E-16	7.056E-14	1.481E-12	2.450E-18	-1.000E+00	0.000E+00	0.000E+00
RED MARR	1.090E-16	6.998E-14	1.469E-12	2.430E-18	-1.000E+00	0.000E+00	0.000E+00
BONE SUR	2.200E-16	1.287E-13	2.702E-12	4.470E-18	-1.000E+00	0.000E+00	0.000E+00
THYROID	1.180E-16	7.459E-14	1.565E-12	2.590E-18	-1.000E+00	0.000E+00	0.000E+00
REMAINDER	1.090E-16	6.941E-14	1.457E-12	2.410E-18	-1.000E+00	0.000E+00	0.000E+00
EFFECTIVE	1.190E-16	7.603E-14	1.596E-12	2.640E-18	-1.000E+00	0.000E+00	0.000E+00
SKIN(FGR)	1.320E-14	2.304E-11	4.835E-10	8.000E-16	-1.000E+00	0.000E+00	0.000E+00
Kr-87							

Ref.

GONADS 4.000E-14 4.962E-12 5.026E-12 7.610E-16-1.000E+00 0.000E+00 0.000E+00
BREAST 4.500E-14 4.740E-12 4.802E-12 7.270E-16-1.000E+00 0.000E+00 0.000E+00
LUNGS 4.040E-14 4.603E-12 4.663E-12 7.060E-16-1.000E+00 0.000E+00 0.000E+00
RED MARR 4.000E-14 4.708E-12 4.769E-12 7.220E-16-1.000E+00 0.000E+00 0.000E+00
BONE SUR 6.020E-14 6.514E-12 6.598E-12 9.990E-16-1.000E+00 0.000E+00 0.000E+00
THYROID 4.130E-14 4.473E-12 4.531E-12 6.860E-16-1.000E+00 0.000E+00 0.000E+00
REMAINDER 3.910E-14 4.590E-12 4.650E-12 7.040E-16-1.000E+00 0.000E+00 0.000E+00
EFFECTIVE 4.120E-14 4.773E-12 4.835E-12 7.320E-16-1.000E+00 0.000E+00 0.000E+00
SKIN(FGR) 1.370E-13 8.802E-11 8.916E-11 1.350E-14-1.000E+00 0.000E+00 0.000E+00
Kr-88
GONADS 9.900E-14 2.278E-11 2.655E-11 1.800E-15-1.000E+00 0.000E+00 0.000E+00
BREAST 1.110E-13 2.177E-11 2.537E-11 1.720E-15-1.000E+00 0.000E+00 0.000E+00
LUNGS 1.010E-13 2.139E-11 2.493E-11 1.690E-15-1.000E+00 0.000E+00 0.000E+00
RED MARR 1.000E-13 2.190E-11 2.552E-11 1.730E-15-1.000E+00 0.000E+00 0.000E+00
BONE SUR 1.390E-13 2.886E-11 3.363E-11 2.280E-15-1.000E+00 0.000E+00 0.000E+00
THYROID 1.030E-13 2.012E-11 2.345E-11 1.590E-15-1.000E+00 0.000E+00 0.000E+00
REMAINDER 9.790E-14 2.139E-11 2.493E-11 1.690E-15-1.000E+00 0.000E+00 0.000E+00
EFFECTIVE 1.020E-13 2.202E-11 2.567E-11 1.740E-15-1.000E+00 0.000E+00 0.000E+00
SKIN(FGR) 1.350E-13 5.607E-11 6.534E-11 4.430E-15-1.000E+00 0.000E+00 0.000E+00
Rb-86
GONADS 4.710E-15 2.788E-12 5.187E-11 9.740E-17-1.000E+00 1.340E-09 2.150E-09
BREAST 5.340E-15 2.662E-12 4.953E-11 9.300E-17-1.000E+00 1.330E-09 2.140E-09
LUNGS 4.710E-15 2.553E-12 4.750E-11 8.920E-17-1.000E+00 3.300E-09 2.140E-09
RED MARR 4.640E-15 2.619E-12 4.873E-11 9.150E-17-1.000E+00 2.320E-09 3.720E-09
BONE SUR 7.050E-15 3.635E-12 6.764E-11 1.270E-16-1.000E+00 4.270E-09 6.860E-09
THYROID 4.840E-15 2.599E-12 4.836E-11 9.080E-17-1.000E+00 1.330E-09 2.140E-09
REMAINDER 4.520E-15 2.542E-12 4.729E-11 8.880E-17-1.000E+00 1.380E-09 2.330E-09
EFFECTIVE 4.810E-15 2.665E-12 4.958E-11 9.310E-17-1.000E+00 1.790E-09 2.530E-09
SKIN(FGR) 4.850E-14 2.210E-10 4.111E-09 7.720E-15-1.000E+00 0.000E+00 0.000E+00
Rb-88
GONADS 3.260E-14 2.788E-12 5.187E-11 9.740E-17-1.000E+00 1.310E-12 2.150E-09
BREAST 3.670E-14 2.662E-12 4.953E-11 9.300E-17-1.000E+00 1.430E-12 2.140E-09
LUNGS 3.310E-14 2.553E-12 4.750E-11 8.920E-17-1.000E+00 1.470E-10 2.140E-09
RED MARR 3.300E-14 2.619E-12 4.873E-11 9.150E-17-1.000E+00 1.450E-12 3.720E-09
BONE SUR 4.620E-14 3.635E-12 6.764E-11 1.270E-16-1.000E+00 1.470E-12 6.860E-09
THYROID 3.370E-14 2.599E-12 4.836E-11 9.080E-17-1.000E+00 1.370E-12 2.140E-09
REMAINDER 3.210E-14 2.542E-12 4.729E-11 8.880E-17-1.000E+00 1.380E-11 2.330E-09
EFFECTIVE 3.360E-14 2.665E-12 4.958E-11 9.310E-17-1.000E+00 2.260E-11 2.530E-09
SKIN(FGR) 1.830E-13 2.210E-10 4.111E-09 7.720E-15-1.000E+00 0.000E+00 0.000E+00
Sr-89
GONADS 7.730E-17 7.155E-14 1.436E-12 2.490E-18-1.000E+00 7.950E-12 8.050E-12
BREAST 9.080E-17 7.212E-14 1.447E-12 2.510E-18-1.000E+00 7.960E-12 7.980E-12
LUNGS 7.080E-17 5.689E-14 1.142E-12 1.980E-18-1.000E+00 8.350E-08 7.970E-12
RED MARR 6.390E-17 5.345E-14 1.073E-12 1.860E-18-1.000E+00 1.070E-10 1.080E-10
BONE SUR 1.940E-16 1.560E-13 3.131E-12 5.430E-18-1.000E+00 1.590E-10 1.610E-10
THYROID 7.600E-17 6.063E-14 1.217E-12 2.110E-18-1.000E+00 7.960E-12 7.970E-12
REMAINDER 6.710E-17 5.603E-14 1.124E-12 1.950E-18-1.000E+00 3.970E-09 8.250E-09
EFFECTIVE 7.730E-17 6.523E-14 1.309E-12 2.270E-18-1.000E+00 1.760E-09 2.500E-09
SKIN(FGR) 3.690E-14 1.914E-10 3.841E-09 6.660E-15-1.000E+00 0.000E+00 0.000E+00
Sr-90
GONADS 7.780E-18 9.590E-15 2.014E-13 3.330E-19-1.000E+00 2.690E-10 5.040E-11
BREAST 9.490E-18 1.008E-14 2.116E-13 3.500E-19-1.000E+00 2.690E-10 5.040E-11
LUNGS 6.440E-18 6.307E-15 1.324E-13 2.190E-19-1.000E+00 2.860E-06 5.040E-11
RED MARR 5.440E-18 5.558E-15 1.167E-13 1.930E-19-1.000E+00 3.280E-08 6.450E-09
BONE SUR 2.280E-17 2.393E-14 5.025E-13 8.310E-19-1.000E+00 7.090E-08 1.390E-08
THYROID 7.330E-18 7.171E-15 1.506E-13 2.490E-19-1.000E+00 2.690E-10 5.040E-11

Ref.

REMAINDER 6.110E-18 6.422E-15 1.348E-13 2.230E-19-1.000E+00 5.730E-09 6.700E-09
EFFECTIVE 7.530E-18 8.179E-15 1.717E-13 2.840E-19-1.000E+00 6.470E-08 3.230E-09
SKIN(FGR) 9.200E-15 4.032E-12 8.465E-11 1.400E-16-1.000E+00 0.000E+00 0.000E+00
Sr-91
GONADS 3.380E-14 2.155E-11 5.062E-11 1.026E-15-1.000E+00 5.650E-11 2.520E-10
BREAST 3.830E-14 2.059E-11 4.838E-11 9.806E-16-1.000E+00 1.740E-11 3.676E-11
LUNGS 3.370E-14 1.970E-11 4.626E-11 9.376E-16-1.000E+00 2.130E-09 1.055E-11
RED MARR 3.310E-14 2.011E-11 4.722E-11 9.570E-16-1.000E+00 2.230E-11 5.659E-11
BONE SUR 5.200E-14 2.852E-11 6.709E-11 1.360E-15-1.000E+00 1.270E-11 2.070E-11
THYROID 3.470E-14 2.035E-11 4.782E-11 9.693E-16-1.000E+00 9.640E-12 1.968E-12
REMAINDER 3.240E-14 1.948E-11 4.573E-11 9.268E-16-1.000E+00 5.780E-10 2.557E-09
EFFECTIVE 4.929E-14 2.057E-11 4.832E-11 9.793E-16-1.000E+00 2.577E-10 8.455E-10
SKIN(FGR) 8.140E-14 1.748E-10 3.987E-10 8.080E-15-1.000E+00 0.000E+00 0.000E+00
Sr-92
GONADS 6.610E-14 1.593E-11 1.830E-11 1.300E-15-1.000E+00 1.020E-11 8.180E-11
BREAST 7.480E-14 1.520E-11 1.745E-11 1.240E-15-1.000E+00 6.490E-12 1.700E-11
LUNGS 6.670E-14 1.483E-11 1.703E-11 1.210E-15-1.000E+00 1.050E-09 7.220E-12
RED MARR 6.620E-14 1.520E-11 1.745E-11 1.240E-15-1.000E+00 6.980E-12 2.290E-11
BONE SUR 9.490E-14 2.010E-11 2.308E-11 1.640E-15-1.000E+00 4.360E-12 8.490E-12
THYROID 6.820E-14 1.446E-11 1.661E-11 1.180E-15-1.000E+00 3.920E-12 1.300E-12
REMAINDER 6.450E-14 1.471E-11 1.689E-11 1.200E-15-1.000E+00 2.900E-10 1.720E-09
EFFECTIVE 6.790E-14 1.532E-11 1.759E-11 1.250E-15-1.000E+00 1.700E-10 5.430E-10
SKIN(FGR) 8.560E-14 2.280E-11 2.618E-11 1.860E-15-1.000E+00 0.000E+00 0.000E+00
Y-90
GONADS 1.890E-16 1.586E-13 1.601E-12 5.750E-18-1.000E+00 5.170E-13 1.430E-14
BREAST 2.200E-16 1.578E-13 1.593E-12 5.720E-18-1.000E+00 5.170E-13 1.270E-14
LUNGS 1.770E-16 1.313E-13 1.326E-12 4.760E-18-1.000E+00 9.310E-09 1.260E-14
RED MARR 1.620E-16 1.261E-13 1.273E-12 4.570E-18-1.000E+00 1.520E-11 3.700E-13
BONE SUR 4.440E-16 3.228E-13 3.259E-12 1.170E-17-1.000E+00 1.510E-11 3.670E-13
THYROID 1.870E-16 1.385E-13 1.398E-12 5.020E-18-1.000E+00 5.170E-13 1.260E-14
REMAINDER 1.680E-16 1.291E-13 1.303E-12 4.680E-18-1.000E+00 3.870E-09 9.680E-09
EFFECTIVE 1.900E-16 1.468E-13 1.482E-12 5.320E-18-1.000E+00 2.280E-09 2.910E-09
SKIN(FGR) 6.240E-14 2.897E-10 2.924E-09 1.050E-14-1.000E+00 0.000E+00 0.000E+00
Y-91
GONADS 2.560E-16 1.756E-13 3.546E-12 6.110E-18-1.000E+00 8.200E-12 3.540E-12
BREAST 2.930E-16 1.713E-13 3.459E-12 5.960E-18-1.000E+00 8.920E-12 5.540E-13
LUNGS 2.500E-16 1.526E-13 3.082E-12 5.310E-18-1.000E+00 9.870E-08 2.020E-13
RED MARR 2.410E-16 1.521E-13 3.070E-12 5.290E-18-1.000E+00 3.190E-10 6.590E-12
BONE SUR 4.560E-16 2.903E-13 5.862E-12 1.010E-17-1.000E+00 3.180E-10 6.130E-12
THYROID 2.600E-16 1.564E-13 3.157E-12 5.440E-18-1.000E+00 8.500E-12 1.290E-13
REMAINDER 2.390E-16 1.509E-13 3.047E-12 5.250E-18-1.000E+00 4.200E-09 8.570E-09
EFFECTIVE 2.600E-16 1.650E-13 3.332E-12 5.740E-18-1.000E+00 1.320E-08 2.570E-09
SKIN(FGR) 3.850E-14 1.989E-10 4.016E-09 6.920E-15-1.000E+00 0.000E+00 0.000E+00
Y-92
GONADS 1.270E-14 3.855E-12 4.872E-12 2.650E-16-1.000E+00 2.610E-12 1.960E-11
BREAST 1.440E-14 3.680E-12 4.652E-12 2.530E-16-1.000E+00 1.500E-12 3.550E-12
LUNGS 1.270E-14 3.535E-12 4.468E-12 2.430E-16-1.000E+00 1.240E-09 1.390E-12
RED MARR 1.250E-14 3.608E-12 4.560E-12 2.480E-16-1.000E+00 2.070E-12 4.910E-12
BONE SUR 1.950E-14 5.091E-12 6.435E-12 3.500E-16-1.000E+00 1.510E-12 1.750E-12
THYROID 1.300E-14 3.579E-12 4.523E-12 2.460E-16-1.000E+00 1.050E-12 1.770E-13
REMAINDER 1.220E-14 3.506E-12 4.431E-12 2.410E-16-1.000E+00 2.030E-10 1.700E-09
EFFECTIVE 1.300E-14 3.680E-12 4.652E-12 2.530E-16-1.000E+00 2.110E-10 5.150E-10
SKIN(FGR) 1.140E-13 2.022E-10 2.556E-10 1.390E-14-1.000E+00 0.000E+00 0.000E+00
Y-93
GONADS 4.670E-15 2.108E-12 4.989E-12 9.510E-17-1.000E+00 5.310E-12 2.200E-11
BREAST 5.300E-15 2.026E-12 4.794E-12 9.140E-17-1.000E+00 1.740E-12 3.130E-12

Ref.

LUNGS 4.680E-15 1.937E-12 4.585E-12 8.740E-17-1.000E+00 2.520E-09 8.670E-13
RED MARR 4.580E-15 1.972E-12 4.669E-12 8.900E-17-1.000E+00 4.040E-12 4.930E-12
BONE SUR 7.580E-15 2.948E-12 6.977E-12 1.330E-16-1.000E+00 3.140E-12 1.730E-12
THYROID 4.790E-15 1.908E-12 4.516E-12 8.610E-17-1.000E+00 9.260E-13 1.260E-13
REMAINDER 4.510E-15 1.919E-12 4.543E-12 8.660E-17-1.000E+00 9.250E-10 4.090E-09
EFFECTIVE 4.800E-15 2.021E-12 4.784E-12 9.120E-17-1.000E+00 5.820E-10 1.230E-09
SKIN(FGR) 8.500E-14 2.726E-10 6.452E-10 1.230E-14-1.000E+00 0.000E+00 0.000E+00
Zr-95
GONADS 3.530E-14 2.182E-11 4.421E-10 7.590E-16-1.000E+00 1.880E-09 8.160E-10
BREAST 4.010E-14 2.084E-11 4.223E-10 7.250E-16-1.000E+00 1.910E-09 1.050E-10
LUNGS 3.510E-14 1.989E-11 4.030E-10 6.920E-16-1.000E+00 2.170E-09 2.340E-11
RED MARR 3.430E-14 2.030E-11 4.112E-10 7.060E-16-1.000E+00 1.300E-08 2.140E-10
BONE SUR 5.620E-14 2.875E-11 5.824E-10 1.000E-15-1.000E+00 1.030E-07 4.860E-10
THYROID 3.610E-14 2.076E-11 4.205E-10 7.220E-16-1.000E+00 1.440E-09 8.270E-12
REMAINDER 3.360E-14 1.963E-11 3.978E-10 6.830E-16-1.000E+00 2.280E-09 2.530E-09
EFFECTIVE 3.600E-14 2.078E-11 4.211E-10 7.230E-16-1.000E+00 6.390E-09 1.020E-09
SKIN(FGR) 4.500E-14 2.561E-11 5.190E-10 8.910E-16-1.000E+00 0.000E+00 0.000E+00
Zr-97
GONADS 8.800E-15 2.179E-11 7.799E-11 9.253E-16-1.000E+00 1.840E-10 6.228E-10
BREAST 9.990E-15 2.083E-11 7.455E-11 8.846E-16-1.000E+00 4.700E-11 8.137E-11
LUNGS 8.810E-15 1.992E-11 7.127E-11 8.456E-16-1.000E+00 4.110E-09 1.770E-11
RED MARR 8.640E-15 2.034E-11 7.279E-11 8.634E-16-1.000E+00 6.370E-11 1.302E-10
BONE SUR 1.380E-14 2.881E-11 1.031E-10 1.224E-15-1.000E+00 3.500E-11 4.558E-11
THYROID 9.030E-15 2.061E-11 7.377E-11 8.755E-16-1.000E+00 2.310E-11 2.671E-12
REMAINDER 8.480E-15 1.966E-11 7.035E-11 8.345E-16-1.000E+00 2.040E-09 6.990E-09
EFFECTIVE 4.432E-14 2.078E-11 7.438E-11 8.824E-16-1.000E+00 1.171E-09 2.283E-09
SKIN(FGR) 5.550E-14 2.281E-10 8.148E-10 9.587E-15-1.000E+00 0.000E+00 0.000E+00
Nb-95
GONADS 3.660E-14 2.253E-11 4.435E-10 7.850E-16-1.000E+00 4.320E-10 8.050E-10
BREAST 4.160E-14 2.150E-11 4.231E-10 7.490E-16-1.000E+00 4.070E-10 1.070E-10
LUNGS 3.650E-14 2.055E-11 4.045E-10 7.160E-16-1.000E+00 8.320E-09 2.740E-11
RED MARR 3.560E-14 2.101E-11 4.135E-10 7.320E-16-1.000E+00 4.420E-10 1.990E-10
BONE SUR 5.790E-14 2.957E-11 5.819E-10 1.030E-15-1.000E+00 5.130E-10 2.940E-10
THYROID 3.750E-14 2.144E-11 4.220E-10 7.470E-16-1.000E+00 3.580E-10 1.180E-11
REMAINDER 3.490E-14 2.032E-11 4.000E-10 7.080E-16-1.000E+00 1.070E-09 1.470E-09
EFFECTIVE 3.740E-14 2.147E-11 4.226E-10 7.480E-16-1.000E+00 1.570E-09 6.950E-10
SKIN(FGR) 4.300E-14 2.598E-11 5.112E-10 9.050E-16-1.000E+00 0.000E+00 0.000E+00
Mo-99
GONADS 7.130E-15 4.282E-12 4.403E-11 1.550E-16-1.000E+00 9.510E-11 2.180E-10
BREAST 8.130E-15 4.116E-12 4.233E-11 1.490E-16-1.000E+00 2.750E-11 3.430E-11
LUNGS 7.060E-15 3.867E-12 3.977E-11 1.400E-16-1.000E+00 4.290E-09 1.510E-11
RED MARR 6.820E-15 3.923E-12 4.034E-11 1.420E-16-1.000E+00 5.240E-11 8.320E-11
BONE SUR 1.240E-14 6.105E-12 6.278E-11 2.210E-16-1.000E+00 4.130E-11 6.320E-11
THYROID 7.270E-15 4.033E-12 4.147E-11 1.460E-16-1.000E+00 1.520E-11 1.030E-11
REMAINDER 6.740E-15 3.812E-12 3.920E-11 1.380E-16-1.000E+00 1.740E-09 4.280E-09
EFFECTIVE 7.280E-15 4.061E-12 4.176E-11 1.470E-16-1.000E+00 1.070E-09 1.360E-09
SKIN(FGR) 3.140E-14 1.039E-10 1.068E-09 3.760E-15-1.000E+00 0.000E+00 0.000E+00
Tc-99m
GONADS 5.750E-15 2.334E-12 3.877E-12 1.240E-16-1.000E+00 2.770E-12 9.750E-12
BREAST 6.650E-15 2.258E-12 3.752E-12 1.200E-16-1.000E+00 2.150E-12 3.570E-12
LUNGS 5.490E-15 2.127E-12 3.533E-12 1.130E-16-1.000E+00 2.280E-11 3.140E-12
RED MARR 4.910E-15 2.070E-12 3.439E-12 1.100E-16-1.000E+00 3.360E-12 6.290E-12
BONE SUR 1.630E-14 5.383E-12 8.942E-12 2.860E-16-1.000E+00 2.620E-12 4.060E-12
THYROID 5.750E-15 2.145E-12 3.564E-12 1.140E-16-1.000E+00 5.010E-11 8.460E-11
REMAINDER 5.150E-15 2.070E-12 3.439E-12 1.100E-16-1.000E+00 1.020E-11 3.340E-11
EFFECTIVE 5.890E-15 2.277E-12 3.783E-12 1.210E-16-1.000E+00 8.800E-12 1.680E-11

Ref.

SKIN(FGR) 7.140E-15 2.710E-12 4.502E-12 1.440E-16-1.000E+00 0.000E+00 0.000E+00
Ru-103
GONADS 2.191E-14 1.404E-11 2.783E-10 4.892E-16-1.000E+00 3.070E-10 5.720E-10
BREAST 2.512E-14 1.350E-11 2.677E-10 4.705E-16-1.000E+00 3.110E-10 1.200E-10
LUNGS 2.180E-14 1.273E-11 2.522E-10 4.432E-16-1.000E+00 1.561E-08 7.310E-11
RED MARR 2.100E-14 1.287E-11 2.551E-10 4.483E-16-1.000E+00 3.190E-10 1.660E-10
BONE SUR 3.892E-14 1.958E-11 3.882E-10 6.823E-16-1.000E+00 2.370E-10 9.631E-11
THYROID 2.241E-14 1.331E-11 2.639E-10 4.638E-16-1.000E+00 2.570E-10 6.250E-11
REMAINDER 2.080E-14 1.248E-11 2.472E-10 4.346E-16-1.000E+00 1.250E-09 2.110E-09
EFFECTIVE 2.251E-14 1.332E-11 2.641E-10 4.642E-16-1.000E+00 2.421E-09 8.271E-10
SKIN(FGR) 2.774E-14 1.785E-11 3.543E-10 6.229E-16-1.000E+00 0.000E+00 0.000E+00
Ru-105
GONADS 3.720E-14 1.327E-11 1.861E-11 8.070E-16-1.000E+00 1.590E-11 9.670E-11
BREAST 4.240E-14 1.271E-11 1.783E-11 7.730E-16-1.000E+00 6.610E-12 1.590E-11
LUNGS 3.700E-14 1.210E-11 1.697E-11 7.360E-16-1.000E+00 5.730E-10 6.210E-12
RED MARR 3.590E-14 1.230E-11 1.725E-11 7.480E-16-1.000E+00 7.700E-12 2.350E-11
BONE SUR 6.280E-14 1.809E-11 2.537E-11 1.100E-15-1.000E+00 4.620E-12 8.890E-12
THYROID 3.800E-14 1.260E-11 1.766E-11 7.660E-16-1.000E+00 4.150E-12 1.820E-12
REMAINDER 3.540E-14 1.189E-11 1.667E-11 7.230E-16-1.000E+00 1.610E-10 8.540E-10
EFFECTIVE 3.810E-14 1.265E-11 1.773E-11 7.690E-16-1.000E+00 1.230E-10 2.870E-10
SKIN(FGR) 6.730E-14 7.368E-11 1.033E-10 4.480E-15-1.000E+00 0.000E+00 0.000E+00
Ru-106
GONADS 1.010E-14 6.411E-12 1.340E-10 2.230E-16-1.000E+00 1.300E-09 1.640E-09
BREAST 1.160E-14 6.152E-12 1.286E-10 2.140E-16-1.000E+00 1.780E-09 1.440E-09
LUNGS 1.010E-14 5.836E-12 1.220E-10 2.030E-16-1.000E+00 1.040E-06 1.420E-09
RED MARR 9.750E-15 5.893E-12 1.232E-10 2.050E-16-1.000E+00 1.760E-09 1.460E-09
BONE SUR 1.720E-14 8.883E-12 1.856E-10 3.090E-16-1.000E+00 1.610E-09 1.430E-09
THYROID 1.030E-14 6.066E-12 1.268E-10 2.110E-16-1.000E+00 1.720E-09 1.410E-09
REMAINDER 9.630E-15 5.721E-12 1.196E-10 1.990E-16-1.000E+00 1.200E-08 2.110E-08
EFFECTIVE 1.040E-14 6.095E-12 1.274E-10 2.120E-16-1.000E+00 1.290E-07 7.400E-09
SKIN(FGR) 1.090E-13 4.082E-10 8.531E-09 1.420E-14-1.000E+00 0.000E+00 0.000E+00
Rh-105
GONADS 3.640E-15 2.127E-12 1.411E-11 7.980E-17-1.000E+00 2.110E-11 5.800E-11
BREAST 4.160E-15 2.063E-12 1.369E-11 7.740E-17-1.000E+00 5.610E-12 8.970E-12
LUNGS 3.570E-15 1.935E-12 1.284E-11 7.260E-17-1.000E+00 9.580E-10 3.860E-12
RED MARR 3.380E-15 1.946E-12 1.291E-11 7.300E-17-1.000E+00 7.770E-12 1.470E-11
BONE SUR 7.530E-15 3.332E-12 2.210E-11 1.250E-16-1.000E+00 4.460E-12 6.750E-12
THYROID 3.680E-15 1.983E-12 1.316E-11 7.440E-17-1.000E+00 2.880E-12 2.910E-12
REMAINDER 3.390E-15 1.885E-12 1.250E-11 7.070E-17-1.000E+00 4.530E-10 1.270E-09
EFFECTIVE 3.720E-15 2.031E-12 1.347E-11 7.620E-17-1.000E+00 2.580E-10 3.990E-10
SKIN(FGR) 1.070E-14 4.691E-12 3.112E-11 1.760E-16-1.000E+00 0.000E+00 0.000E+00
Sb-127
GONADS 3.260E-14 1.985E-11 2.441E-10 7.100E-16-1.000E+00 2.520E-10 6.140E-10
BREAST 3.720E-14 1.904E-11 2.341E-10 6.810E-16-1.000E+00 9.120E-11 7.600E-11
LUNGS 3.240E-14 1.809E-11 2.224E-10 6.470E-16-1.000E+00 6.940E-09 1.570E-11
RED MARR 3.140E-14 1.834E-11 2.255E-10 6.560E-16-1.000E+00 1.610E-10 1.330E-10
BONE SUR 5.520E-14 2.720E-11 3.345E-10 9.730E-16-1.000E+00 1.340E-10 5.240E-11
THYROID 3.330E-14 1.884E-11 2.317E-10 6.740E-16-1.000E+00 6.150E-11 4.640E-12
REMAINDER 3.090E-14 1.775E-11 2.183E-10 6.350E-16-1.000E+00 2.330E-09 5.870E-09
EFFECTIVE 3.330E-14 1.890E-11 2.324E-10 6.760E-16-1.000E+00 1.630E-09 1.950E-09
SKIN(FGR) 5.580E-14 7.967E-11 9.799E-10 2.850E-15-1.000E+00 0.000E+00 0.000E+00
Sb-129
GONADS 6.970E-14 2.336E-11 3.231E-11 1.440E-15-1.000E+00 2.150E-11 1.510E-10
BREAST 7.910E-14 2.222E-11 3.074E-11 1.370E-15-1.000E+00 1.280E-11 2.560E-11
LUNGS 6.980E-14 2.141E-11 2.962E-11 1.320E-15-1.000E+00 8.980E-10 9.390E-12
RED MARR 6.860E-14 2.190E-11 3.029E-11 1.350E-15-1.000E+00 1.700E-11 3.670E-11

Ref.

BONE SUR 1.070E-13 3.033E-11 4.196E-11 1.870E-15-1.000E+00 1.460E-11 1.340E-11
THYROID 7.160E-14 2.174E-11 3.007E-11 1.340E-15-1.000E+00 9.720E-12 1.470E-12
REMAINDER 6.710E-14 2.125E-11 2.939E-11 1.310E-15-1.000E+00 1.870E-10 1.450E-09
EFFECTIVE 7.140E-14 2.238E-11 3.096E-11 1.380E-15-1.000E+00 1.740E-10 4.840E-10
SKIN(FGR) 1.050E-13 8.273E-11 1.144E-10 5.100E-15-1.000E+00 0.000E+00 0.000E+00
Te-127
GONADS 2.370E-16 1.191E-13 2.661E-13 5.480E-18-1.000E+00 2.020E-12 4.020E-12
BREAST 2.730E-16 1.158E-13 2.588E-13 5.330E-18-1.000E+00 1.880E-12 3.000E-12
LUNGS 2.320E-16 1.060E-13 2.370E-13 4.880E-18-1.000E+00 4.270E-10 2.890E-12
RED MARR 2.210E-16 1.058E-13 2.365E-13 4.870E-18-1.000E+00 4.090E-12 6.570E-12
BONE SUR 4.650E-16 1.862E-13 4.162E-13 8.570E-18-1.000E+00 4.090E-12 6.460E-12
THYROID 2.400E-16 1.106E-13 2.472E-13 5.090E-18-1.000E+00 1.840E-12 2.860E-12
REMAINDER 2.210E-16 1.036E-13 2.316E-13 4.770E-18-1.000E+00 1.110E-10 6.130E-10
EFFECTIVE 2.420E-16 1.125E-13 2.515E-13 5.180E-18-1.000E+00 8.600E-11 1.870E-10
SKIN(FGR) 1.140E-14 1.173E-11 2.622E-11 5.400E-16-1.000E+00 0.000E+00 0.000E+00
Te-127m
GONADS 1.900E-16 4.689E-13 9.642E-12 1.630E-17-1.000E+00 1.100E-10 1.250E-10
BREAST 2.690E-16 5.150E-13 1.059E-11 1.790E-17-1.000E+00 1.100E-10 9.740E-11
LUNGS 7.620E-17 1.602E-13 3.295E-12 5.570E-18-1.000E+00 3.340E-08 9.620E-11
RED MARR 6.430E-17 1.249E-13 2.567E-12 4.340E-18-1.000E+00 5.360E-09 5.430E-09
BONE SUR 3.940E-16 9.005E-13 1.852E-11 3.130E-17-1.000E+00 2.040E-08 2.070E-08
THYROID 1.500E-16 2.779E-13 5.714E-12 9.660E-18-1.000E+00 9.660E-11 9.430E-11
REMAINDER 8.640E-17 1.999E-13 4.111E-12 6.950E-18-1.000E+00 1.660E-09 2.980E-09
EFFECTIVE 1.470E-16 3.251E-13 6.684E-12 1.130E-17-1.000E+00 5.810E-09 2.230E-09
SKIN(FGR) 8.490E-16 1.496E-12 3.076E-11 5.200E-17-1.000E+00 0.000E+00 0.000E+00
Te-129
GONADS 2.710E-15 3.889E-13 3.922E-13 6.510E-17-1.000E+00 5.050E-13 1.590E-12
BREAST 3.120E-15 3.800E-13 3.832E-13 6.360E-17-1.000E+00 5.390E-13 6.050E-13
LUNGS 2.640E-15 3.298E-13 3.326E-13 5.520E-17-1.000E+00 1.530E-10 4.910E-13
RED MARR 2.540E-15 3.298E-13 3.326E-13 5.520E-17-1.000E+00 6.190E-13 7.640E-13
BONE SUR 4.880E-15 5.753E-13 5.802E-13 9.630E-17-1.000E+00 6.220E-13 5.400E-13
THYROID 2.740E-15 3.525E-13 3.555E-13 5.900E-17-1.000E+00 5.090E-13 3.360E-13
REMAINDER 2.520E-15 3.262E-13 3.289E-13 5.460E-17-1.000E+00 7.280E-12 1.790E-10
EFFECTIVE 2.750E-15 3.590E-13 3.621E-13 6.010E-17-1.000E+00 2.090E-11 5.450E-11
SKIN(FGR) 3.570E-14 3.429E-11 3.458E-11 5.740E-15-1.000E+00 0.000E+00 0.000E+00
Te-129m
GONADS 1.560E-15 2.206E-12 4.799E-11 8.561E-17-1.000E+00 1.780E-10 2.420E-10
BREAST 1.810E-15 2.181E-12 4.739E-11 8.454E-17-1.000E+00 1.690E-10 1.664E-10
LUNGS 1.460E-15 1.741E-12 3.815E-11 6.808E-17-1.000E+00 4.030E-08 1.593E-10
RED MARR 1.420E-15 1.729E-12 3.793E-11 6.768E-17-1.000E+00 3.100E-09 3.500E-09
BONE SUR 2.600E-15 3.287E-12 7.147E-11 1.275E-16-1.000E+00 7.050E-09 7.990E-09
THYROID 1.560E-15 1.923E-12 4.201E-11 7.495E-17-1.000E+00 1.560E-10 1.572E-10
REMAINDER 1.410E-15 1.746E-12 3.822E-11 6.819E-17-1.000E+00 3.270E-09 7.196E-09
EFFECTIVE 3.337E-15 1.974E-12 4.308E-11 7.686E-17-1.000E+00 6.484E-09 2.925E-09
SKIN(FGR) 1.490E-14 1.501E-10 3.360E-09 6.001E-15-1.000E+00 0.000E+00 0.000E+00
Te-131m
GONADS 6.850E-14 4.020E-11 2.343E-10 1.535E-15-1.000E+00 2.340E-10 7.415E-10
BREAST 7.780E-14 3.853E-11 2.246E-10 1.472E-15-1.000E+00 9.250E-11 1.361E-10
LUNGS 6.830E-14 3.657E-11 2.131E-10 1.397E-15-1.000E+00 2.230E-09 6.335E-11
RED MARR 6.680E-14 3.736E-11 2.178E-10 1.427E-15-1.000E+00 1.410E-10 2.435E-10
BONE SUR 1.090E-13 5.467E-11 3.189E-10 2.090E-15-1.000E+00 2.270E-10 3.248E-10
THYROID 7.020E-14 3.741E-11 2.181E-10 1.429E-15-1.000E+00 3.610E-08 4.383E-08
REMAINDER 6.550E-14 3.626E-11 2.113E-10 1.385E-15-1.000E+00 9.460E-10 3.153E-09
EFFECTIVE 7.463E-14 3.825E-11 2.229E-10 1.461E-15-1.000E+00 1.758E-09 2.514E-09
SKIN(FGR) 8.850E-14 1.033E-10 6.188E-10 4.056E-15-1.000E+00 0.000E+00 0.000E+00
Te-132

Ref.

GONADS 1.020E-14 6.812E-12 7.706E-11 2.450E-16-1.000E+00 4.150E-10 5.410E-10
BREAST 1.180E-14 6.756E-12 7.643E-11 2.430E-16-1.000E+00 3.630E-10 3.500E-10
LUNGS 9.650E-15 5.727E-12 6.479E-11 2.060E-16-1.000E+00 1.670E-09 3.300E-10
RED MARR 8.950E-15 5.588E-12 6.322E-11 2.010E-16-1.000E+00 4.270E-10 4.440E-10
BONE SUR 2.420E-14 1.273E-11 1.441E-10 4.580E-16-1.000E+00 7.120E-10 8.300E-10
THYROID 1.020E-14 5.978E-12 6.762E-11 2.150E-16-1.000E+00 6.280E-08 5.950E-08
REMAINDER 9.160E-15 5.644E-12 6.385E-11 2.030E-16-1.000E+00 7.890E-10 1.490E-09
EFFECTIVE 1.030E-14 6.339E-12 7.171E-11 2.280E-16-1.000E+00 2.550E-09 2.540E-09
SKIN(FGR) 1.390E-14 8.313E-12 9.405E-11 2.990E-16-1.000E+00 0.000E+00 0.000E+00
I-131
GONADS 1.780E-14 1.119E-11 1.789E-10 3.940E-16-1.000E+00 2.530E-11 4.070E-11
BREAST 2.040E-14 1.082E-11 1.730E-10 3.810E-16-1.000E+00 7.880E-11 1.210E-10
LUNGS 1.760E-14 1.016E-11 1.626E-10 3.580E-16-1.000E+00 6.570E-10 1.020E-10
RED MARR 1.680E-14 1.022E-11 1.635E-10 3.600E-16-1.000E+00 6.260E-11 9.440E-11
BONE SUR 3.450E-14 1.675E-11 2.679E-10 5.900E-16-1.000E+00 5.730E-11 8.720E-11
THYROID 1.810E-14 1.053E-11 1.685E-10 3.710E-16-1.000E+00 2.920E-07 4.760E-07
REMAINDER 1.670E-14 9.908E-12 1.585E-10 3.490E-16-1.000E+00 8.030E-11 1.570E-10
EFFECTIVE 1.820E-14 1.067E-11 1.707E-10 3.760E-16-1.000E+00 8.890E-09 1.440E-08
SKIN(FGR) 2.980E-14 1.825E-11 2.920E-10 6.430E-16-1.000E+00 0.000E+00 0.000E+00
I-132
GONADS 1.090E-13 2.523E-11 2.771E-11 2.320E-15-1.000E+00 9.950E-12 2.330E-11
BREAST 1.240E-13 2.414E-11 2.652E-11 2.220E-15-1.000E+00 1.410E-11 2.520E-11
LUNGS 1.090E-13 2.305E-11 2.532E-11 2.120E-15-1.000E+00 2.710E-10 2.640E-11
RED MARR 1.070E-13 2.360E-11 2.592E-11 2.170E-15-1.000E+00 1.400E-11 2.460E-11
BONE SUR 1.730E-13 3.327E-11 3.655E-11 3.060E-15-1.000E+00 1.240E-11 2.190E-11
THYROID 1.120E-13 2.381E-11 2.616E-11 2.190E-15-1.000E+00 1.740E-09 3.870E-09
REMAINDER 1.050E-13 2.283E-11 2.509E-11 2.100E-15-1.000E+00 3.780E-11 1.650E-10
EFFECTIVE 1.120E-13 2.403E-11 2.640E-11 2.210E-15-1.000E+00 1.030E-10 1.820E-10
SKIN(FGR) 1.580E-13 8.199E-11 9.007E-11 7.540E-15-1.000E+00 0.000E+00 0.000E+00
I-133
GONADS 2.870E-14 1.585E-11 6.748E-11 6.270E-16-1.000E+00 1.950E-11 3.630E-11
BREAST 3.280E-14 1.519E-11 6.468E-11 6.010E-16-1.000E+00 2.940E-11 4.680E-11
LUNGS 2.860E-14 1.446E-11 6.156E-11 5.720E-16-1.000E+00 8.200E-10 4.530E-11
RED MARR 2.770E-14 1.466E-11 6.242E-11 5.800E-16-1.000E+00 2.720E-11 4.300E-11
BONE SUR 4.870E-14 2.161E-11 9.202E-11 8.550E-16-1.000E+00 2.520E-11 4.070E-11
THYROID 2.930E-14 1.502E-11 6.393E-11 5.940E-16-1.000E+00 4.860E-08 9.100E-08
REMAINDER 2.730E-14 1.418E-11 6.038E-11 5.610E-16-1.000E+00 5.000E-11 1.550E-10
EFFECTIVE 2.940E-14 1.509E-11 6.425E-11 5.970E-16-1.000E+00 1.580E-09 2.800E-09
SKIN(FGR) 5.830E-14 1.150E-10 4.897E-10 4.550E-15-1.000E+00 0.000E+00 0.000E+00
I-134
GONADS 1.270E-13 1.200E-11 1.202E-11 2.640E-15-1.000E+00 4.250E-12 1.100E-11
BREAST 1.440E-13 1.145E-11 1.147E-11 2.520E-15-1.000E+00 6.170E-12 1.170E-11
LUNGS 1.270E-13 1.100E-11 1.102E-11 2.420E-15-1.000E+00 1.430E-10 1.260E-11
RED MARR 1.250E-13 1.127E-11 1.129E-11 2.480E-15-1.000E+00 6.080E-12 1.090E-11
BONE SUR 1.960E-13 1.568E-11 1.571E-11 3.450E-15-1.000E+00 5.310E-12 9.320E-12
THYROID 1.300E-13 1.127E-11 1.129E-11 2.480E-15-1.000E+00 2.880E-10 6.210E-10
REMAINDER 1.220E-13 1.091E-11 1.093E-11 2.400E-15-1.000E+00 2.270E-11 1.340E-10
EFFECTIVE 1.300E-13 1.150E-11 1.152E-11 2.530E-15-1.000E+00 3.550E-11 6.660E-11
SKIN(FGR) 1.870E-13 4.477E-11 4.485E-11 9.850E-15-1.000E+00 0.000E+00 0.000E+00
I-135
GONADS 8.078E-14 3.113E-11 5.489E-11 1.599E-15-1.000E+00 1.700E-11 3.610E-11
BREAST 9.143E-14 2.971E-11 5.240E-11 1.526E-15-1.000E+00 2.340E-11 3.850E-11
LUNGS 8.145E-14 2.886E-11 5.089E-11 1.482E-15-1.000E+00 4.410E-10 3.750E-11
RED MARR 8.054E-14 2.965E-11 5.228E-11 1.523E-15-1.000E+00 2.240E-11 3.650E-11
BONE SUR 1.184E-13 3.983E-11 7.024E-11 2.046E-15-1.000E+00 2.010E-11 3.360E-11
THYROID 8.324E-14 2.852E-11 5.030E-11 1.465E-15-1.000E+00 8.460E-09 1.790E-08

Ref.

REMAINDER 7.861E-14 2.883E-11 5.084E-11 1.481E-15-1.000E+00 4.700E-11 1.540E-10
EFFECTIVE 8.294E-14 2.989E-11 5.271E-11 1.535E-15-1.000E+00 3.320E-10 6.080E-10
SKIN(FGR) 1.156E-13 9.826E-11 1.733E-10 5.047E-15-1.000E+00 0.000E+00 0.000E+00
Xe-133
GONADS 1.610E-15 1.465E-12 2.052E-11 5.200E-17-1.000E+00 0.000E+00 0.000E+00
BREAST 1.960E-15 1.505E-12 2.107E-11 5.340E-17-1.000E+00 0.000E+00 0.000E+00
LUNGS 1.320E-15 1.045E-12 1.464E-11 3.710E-17-1.000E+00 0.000E+00 0.000E+00
RED MARR 1.070E-15 8.791E-13 1.231E-11 3.120E-17-1.000E+00 0.000E+00 0.000E+00
BONE SUR 5.130E-15 4.254E-12 5.958E-11 1.510E-16-1.000E+00 0.000E+00 0.000E+00
THYROID 1.510E-15 1.181E-12 1.653E-11 4.190E-17-1.000E+00 0.000E+00 0.000E+00
REMAINDER 1.240E-15 1.042E-12 1.460E-11 3.700E-17-1.000E+00 0.000E+00 0.000E+00
EFFECTIVE 1.560E-15 1.299E-12 1.819E-11 4.610E-17-1.000E+00 0.000E+00 0.000E+00
SKIN(FGR) 4.970E-15 1.953E-12 2.734E-11 6.930E-17-1.000E+00 0.000E+00 0.000E+00
Xe-133m
GONADS 1.610E-15 1.465E-12 2.052E-11 5.200E-17-1.000E+00 0.000E+00 0.000E+00
BREAST 1.960E-15 1.505E-12 2.107E-11 5.340E-17-1.000E+00 0.000E+00 0.000E+00
LUNGS 1.320E-15 1.045E-12 1.464E-11 3.710E-17-1.000E+00 0.000E+00 0.000E+00
RED MARR 1.070E-15 8.791E-13 1.231E-11 3.120E-17-1.000E+00 0.000E+00 0.000E+00
BONE SUR 5.130E-15 4.254E-12 5.958E-11 1.510E-16-1.000E+00 0.000E+00 0.000E+00
THYROID 1.510E-15 1.181E-12 1.653E-11 4.190E-17-1.000E+00 0.000E+00 0.000E+00
REMAINDER 1.240E-15 1.042E-12 1.460E-11 3.700E-17-1.000E+00 0.000E+00 0.000E+00
EFFECTIVE 1.370E-15 1.299E-12 1.819E-11 4.610E-17-1.000E+00 0.000E+00 0.000E+00
SKIN(FGR) 4.970E-15 1.953E-12 2.734E-11 6.930E-17-1.000E+00 0.000E+00 0.000E+00
Xe-135
GONADS 1.170E-14 5.455E-12 1.194E-11 2.530E-16-1.000E+00 0.000E+00 0.000E+00
BREAST 1.330E-14 5.325E-12 1.166E-11 2.470E-16-1.000E+00 0.000E+00 0.000E+00
LUNGS 1.130E-14 4.959E-12 1.086E-11 2.300E-16-1.000E+00 0.000E+00 0.000E+00
RED MARR 1.070E-14 4.959E-12 1.086E-11 2.300E-16-1.000E+00 0.000E+00 0.000E+00
BONE SUR 2.570E-14 9.120E-12 1.997E-11 4.230E-16-1.000E+00 0.000E+00 0.000E+00
THYROID 1.180E-14 5.023E-12 1.100E-11 2.330E-16-1.000E+00 0.000E+00 0.000E+00
REMAINDER 1.080E-14 4.829E-12 1.058E-11 2.240E-16-1.000E+00 0.000E+00 0.000E+00
EFFECTIVE 1.190E-14 5.217E-12 1.142E-11 2.420E-16-1.000E+00 0.000E+00 0.000E+00
SKIN(FGR) 3.120E-14 4.506E-11 9.867E-11 2.090E-15-1.000E+00 0.000E+00 0.000E+00
Xe-135m
GONADS 2.000E-14 5.933E-13 5.933E-13 4.480E-16-1.000E+00 0.000E+00 0.000E+00
BREAST 2.290E-14 5.695E-13 5.695E-13 4.300E-16-1.000E+00 0.000E+00 0.000E+00
LUNGS 1.980E-14 5.351E-13 5.351E-13 4.040E-16-1.000E+00 0.000E+00 0.000E+00
RED MARR 1.910E-14 5.404E-13 5.404E-13 4.080E-16-1.000E+00 0.000E+00 0.000E+00
BONE SUR 3.500E-14 8.251E-13 8.251E-13 6.230E-16-1.000E+00 0.000E+00 0.000E+00
THYROID 2.040E-14 5.615E-13 5.615E-13 4.240E-16-1.000E+00 0.000E+00 0.000E+00
REMAINDER 1.890E-14 5.245E-13 5.245E-13 3.960E-16-1.000E+00 0.000E+00 0.000E+00
EFFECTIVE 2.040E-14 5.615E-13 5.615E-13 4.240E-16-1.000E+00 0.000E+00 0.000E+00
SKIN(FGR) 2.970E-14 1.867E-12 1.867E-12 1.410E-15-1.000E+00 0.000E+00 0.000E+00
Xe-138
GONADS 5.590E-14 1.315E-12 1.315E-12 1.070E-15-1.000E+00 0.000E+00 0.000E+00
BREAST 6.320E-14 1.254E-12 1.254E-12 1.020E-15-1.000E+00 0.000E+00 0.000E+00
LUNGS 5.660E-14 1.225E-12 1.225E-12 9.970E-16-1.000E+00 0.000E+00 0.000E+00
RED MARR 5.600E-14 1.254E-12 1.254E-12 1.020E-15-1.000E+00 0.000E+00 0.000E+00
BONE SUR 8.460E-14 1.733E-12 1.733E-12 1.410E-15-1.000E+00 0.000E+00 0.000E+00
THYROID 5.770E-14 1.174E-12 1.174E-12 9.550E-16-1.000E+00 0.000E+00 0.000E+00
REMAINDER 5.490E-14 1.222E-12 1.222E-12 9.940E-16-1.000E+00 0.000E+00 0.000E+00
EFFECTIVE 5.770E-14 1.266E-12 1.266E-12 1.030E-15-1.000E+00 0.000E+00 0.000E+00
SKIN(FGR) 1.070E-13 9.403E-12 9.403E-12 7.650E-15-1.000E+00 0.000E+00 0.000E+00
Cs-134
GONADS 7.400E-14 4.607E-11 9.646E-10 1.600E-15-1.000E+00 1.300E-08 2.060E-08
BREAST 8.430E-14 4.406E-11 9.224E-10 1.530E-15-1.000E+00 1.080E-08 1.720E-08

Ref.

LUNGS 7.370E-14 4.204E-11 8.802E-10 1.460E-15-1.000E+00 1.180E-08 1.760E-08
RED MARR 7.190E-14 4.262E-11 8.922E-10 1.480E-15-1.000E+00 1.180E-08 1.870E-08
BONE SUR 1.200E-13 6.105E-11 1.278E-09 2.120E-15-1.000E+00 1.100E-08 1.740E-08
THYROID 7.570E-14 4.377E-11 9.163E-10 1.520E-15-1.000E+00 1.110E-08 1.760E-08
REMAINDER 7.060E-14 4.147E-11 8.681E-10 1.440E-15-1.000E+00 1.390E-08 2.210E-08
EFFECTIVE 7.570E-14 4.377E-11 9.163E-10 1.520E-15-1.000E+00 1.250E-08 1.980E-08
SKIN(FGR) 9.450E-14 6.249E-11 1.308E-09 2.170E-15-1.000E+00 0.000E+00 0.000E+00
Cs-136
GONADS 1.040E-13 6.223E-11 1.102E-09 2.180E-15-1.000E+00 1.880E-09 3.040E-09
BREAST 1.180E-13 5.966E-11 1.056E-09 2.090E-15-1.000E+00 1.670E-09 2.650E-09
LUNGS 1.040E-13 5.710E-11 1.011E-09 2.000E-15-1.000E+00 2.320E-09 2.620E-09
RED MARR 1.010E-13 5.824E-11 1.031E-09 2.040E-15-1.000E+00 1.860E-09 2.950E-09
BONE SUR 1.660E-13 8.422E-11 1.491E-09 2.950E-15-1.000E+00 1.700E-09 2.710E-09
THYROID 1.070E-13 5.852E-11 1.036E-09 2.050E-15-1.000E+00 1.730E-09 2.740E-09
REMAINDER 9.950E-14 5.652E-11 1.001E-09 1.980E-15-1.000E+00 2.190E-09 3.520E-09
EFFECTIVE 1.060E-13 5.966E-11 1.056E-09 2.090E-15-1.000E+00 1.980E-09 3.040E-09
SKIN(FGR) 1.250E-13 7.251E-11 1.284E-09 2.540E-15-1.000E+00 0.000E+00 0.000E+00
Cs-137
GONADS 2.669E-14 1.669E-11 3.530E-10 5.840E-16-1.000E+00 8.760E-09 1.390E-08
BREAST 3.047E-14 1.596E-11 3.376E-10 5.585E-16-1.000E+00 7.840E-09 1.240E-08
LUNGS 2.649E-14 1.517E-11 3.209E-10 5.309E-16-1.000E+00 8.820E-09 1.270E-08
RED MARR 2.583E-14 1.542E-11 3.260E-10 5.394E-16-1.000E+00 8.300E-09 1.320E-08
BONE SUR 4.382E-14 2.238E-11 4.734E-10 7.832E-16-1.000E+00 7.940E-09 1.260E-08
THYROID 2.725E-14 1.588E-11 3.358E-10 5.556E-16-1.000E+00 7.930E-09 1.260E-08
REMAINDER 2.536E-14 1.490E-11 3.152E-10 5.215E-16-1.000E+00 9.120E-09 1.450E-08
EFFECTIVE 2.725E-14 1.585E-11 3.353E-10 5.546E-16-1.000E+00 8.630E-09 1.350E-08
SKIN(FGR) 4.392E-14 5.253E-11 1.110E-09 1.836E-15-1.000E+00 0.000E+00 0.000E+00
Ba-139
GONADS 2.130E-15 3.368E-13 3.429E-13 4.790E-17-1.000E+00 2.560E-12 1.560E-12
BREAST 2.450E-15 3.297E-13 3.357E-13 4.690E-17-1.000E+00 2.460E-12 5.170E-13
LUNGS 2.030E-15 3.002E-13 3.057E-13 4.270E-17-1.000E+00 2.530E-10 3.890E-13
RED MARR 1.870E-15 2.932E-13 2.985E-13 4.170E-17-1.000E+00 3.410E-12 8.590E-13
BONE SUR 5.290E-15 6.841E-13 6.965E-13 9.730E-17-1.000E+00 2.490E-12 4.380E-13
THYROID 2.130E-15 3.044E-13 3.100E-13 4.330E-17-1.000E+00 2.400E-12 2.660E-13
REMAINDER 1.920E-15 2.932E-13 2.985E-13 4.170E-17-1.000E+00 4.820E-11 3.570E-10
EFFECTIVE 2.170E-15 3.227E-13 3.286E-13 4.590E-17-1.000E+00 4.640E-11 1.080E-10
SKIN(FGR) 6.160E-14 7.241E-11 7.373E-11 1.030E-14-1.000E+00 0.000E+00 0.000E+00
Ba-140
GONADS 8.410E-15 5.451E-12 9.607E-11 1.910E-16-1.000E+00 4.300E-10 9.960E-10
BREAST 9.640E-15 5.280E-12 9.305E-11 1.850E-16-1.000E+00 2.870E-10 1.590E-10
LUNGS 8.270E-15 4.852E-12 8.550E-11 1.700E-16-1.000E+00 1.660E-09 6.630E-11
RED MARR 7.930E-15 4.880E-12 8.601E-11 1.710E-16-1.000E+00 1.290E-09 4.390E-10
BONE SUR 1.550E-14 8.020E-12 1.413E-10 2.810E-16-1.000E+00 2.410E-09 5.530E-10
THYROID 8.530E-15 5.109E-12 9.003E-11 1.790E-16-1.000E+00 2.560E-10 5.250E-11
REMAINDER 7.890E-15 4.766E-12 8.399E-11 1.670E-16-1.000E+00 1.410E-09 7.370E-09
EFFECTIVE 8.580E-15 5.137E-12 9.053E-11 1.800E-16-1.000E+00 1.010E-09 2.560E-09
SKIN(FGR) 2.520E-14 5.565E-11 9.808E-10 1.950E-15-1.000E+00 0.000E+00 0.000E+00
La-140
GONADS 1.140E-13 6.027E-11 4.425E-10 2.240E-15-1.000E+00 4.540E-10 1.340E-09
BREAST 1.290E-13 5.758E-11 4.228E-10 2.140E-15-1.000E+00 1.450E-10 1.800E-10
LUNGS 1.150E-13 5.596E-11 4.109E-10 2.080E-15-1.000E+00 4.210E-09 4.010E-11
RED MARR 1.140E-13 5.731E-11 4.208E-10 2.130E-15-1.000E+00 2.140E-10 2.810E-10
BONE SUR 1.690E-13 7.776E-11 5.709E-10 2.890E-15-1.000E+00 1.410E-10 9.770E-11
THYROID 1.180E-13 5.462E-11 4.010E-10 2.030E-15-1.000E+00 6.870E-11 6.400E-12
REMAINDER 1.110E-13 5.569E-11 4.089E-10 2.070E-15-1.000E+00 2.120E-09 6.260E-09
EFFECTIVE 1.170E-13 5.812E-11 4.267E-10 2.160E-15-1.000E+00 1.310E-09 2.280E-09

Ref.

SKIN(FGR) 1.660E-13 2.217E-10 1.628E-09 8.240E-15-1.000E+00 0.000E+00 0.000E+00
La-141
GONADS 2.330E-15 7.315E-13 9.675E-13 4.740E-17-1.000E+00 1.010E-11 3.770E-12
BREAST 2.640E-15 7.007E-13 9.267E-13 4.540E-17-1.000E+00 9.840E-12 7.070E-13
LUNGS 2.340E-15 6.713E-13 8.879E-13 4.350E-17-1.000E+00 6.460E-10 2.720E-13
RED MARR 2.310E-15 6.852E-13 9.063E-13 4.440E-17-1.000E+00 2.930E-11 1.070E-12
BONE SUR 3.490E-15 9.923E-13 1.312E-12 6.430E-17-1.000E+00 1.200E-10 6.060E-13
THYROID 2.390E-15 6.590E-13 8.716E-13 4.270E-17-1.000E+00 9.400E-12 5.290E-14
REMAINDER 2.260E-15 6.682E-13 8.838E-13 4.330E-17-1.000E+00 2.280E-10 1.240E-09
EFFECTIVE 2.390E-15 7.007E-13 9.267E-13 4.540E-17-1.000E+00 1.570E-10 3.740E-10
SKIN(FGR) 6.580E-14 1.667E-10 2.204E-10 1.080E-14-1.000E+00 0.000E+00 0.000E+00
La-142
GONADS 1.400E-13 1.978E-11 2.034E-11 2.540E-15-1.000E+00 1.660E-11 6.990E-11
BREAST 1.570E-13 1.885E-11 1.938E-11 2.420E-15-1.000E+00 1.130E-11 1.540E-11
LUNGS 1.420E-13 1.846E-11 1.898E-11 2.370E-15-1.000E+00 3.010E-10 8.400E-12
RED MARR 1.420E-13 1.900E-11 1.954E-11 2.440E-15-1.000E+00 1.360E-11 1.930E-11
BONE SUR 1.950E-13 2.484E-11 2.554E-11 3.190E-15-1.000E+00 1.110E-11 7.400E-12
THYROID 1.450E-13 1.768E-11 1.818E-11 2.270E-15-1.000E+00 8.740E-12 1.160E-12
REMAINDER 1.380E-13 1.853E-11 1.906E-11 2.380E-15-1.000E+00 8.070E-11 5.200E-10
EFFECTIVE 1.440E-13 1.916E-11 1.970E-11 2.460E-15-1.000E+00 6.840E-11 1.790E-10
SKIN(FGR) 2.160E-13 9.111E-11 9.368E-11 1.170E-14-1.000E+00 0.000E+00 0.000E+00
Ce-141
GONADS 3.380E-15 2.213E-12 4.332E-11 7.710E-17-1.000E+00 5.540E-11 1.080E-10
BREAST 3.930E-15 2.170E-12 4.247E-11 7.560E-17-1.000E+00 4.460E-11 1.110E-11
LUNGS 3.170E-15 1.951E-12 3.820E-11 6.800E-17-1.000E+00 1.670E-08 1.430E-12
RED MARR 2.830E-15 1.860E-12 3.641E-11 6.480E-17-1.000E+00 8.960E-11 3.390E-11
BONE SUR 9.410E-15 5.166E-12 1.011E-10 1.800E-16-1.000E+00 2.540E-10 2.300E-11
THYROID 3.350E-15 2.003E-12 3.922E-11 6.980E-17-1.000E+00 2.550E-11 1.800E-13
REMAINDER 2.980E-15 1.894E-12 3.708E-11 6.600E-17-1.000E+00 1.260E-09 2.500E-09
EFFECTIVE 3.430E-15 2.118E-12 4.146E-11 7.380E-17-1.000E+00 2.420E-09 7.830E-10
SKIN(FGR) 1.020E-14 3.788E-12 7.416E-11 1.320E-16-1.000E+00 0.000E+00 0.000E+00
Ce-143
GONADS 1.280E-14 7.900E-12 4.958E-11 2.980E-16-1.000E+00 7.530E-11 2.120E-10
BREAST 1.470E-14 7.688E-12 4.825E-11 2.900E-16-1.000E+00 1.660E-11 2.320E-11
LUNGS 1.230E-14 6.893E-12 4.325E-11 2.600E-16-1.000E+00 3.880E-09 3.820E-12
RED MARR 1.170E-14 6.787E-12 4.259E-11 2.560E-16-1.000E+00 2.960E-11 5.070E-11
BONE SUR 2.520E-14 1.323E-11 8.302E-11 4.990E-16-1.000E+00 1.640E-11 1.610E-11
THYROID 1.280E-14 7.211E-12 4.525E-11 2.720E-16-1.000E+00 6.230E-12 4.350E-13
REMAINDER 1.170E-14 6.734E-12 4.226E-11 2.540E-16-1.000E+00 1.420E-09 3.890E-09
EFFECTIVE 1.290E-14 7.396E-12 4.642E-11 2.790E-16-1.000E+00 9.160E-10 1.230E-09
SKIN(FGR) 3.960E-14 1.058E-10 6.638E-10 3.990E-15-1.000E+00 0.000E+00 0.000E+00
Ce-144
GONADS 2.725E-15 6.328E-13 1.319E-11 6.088E-17-1.000E+00 2.390E-10 6.987E-11
BREAST 3.129E-15 6.274E-13 1.307E-11 5.922E-17-1.000E+00 3.480E-10 1.223E-11
LUNGS 2.639E-15 5.228E-13 1.089E-11 5.362E-17-1.000E+00 7.911E-07 6.551E-12
RED MARR 2.507E-15 4.755E-13 9.907E-12 5.247E-17-1.000E+00 2.880E-09 8.923E-11
BONE SUR 5.441E-15 1.646E-12 3.429E-11 1.127E-16-1.000E+00 4.720E-09 1.280E-10
THYROID 2.753E-15 5.529E-13 1.152E-11 5.418E-17-1.000E+00 2.920E-10 5.154E-12
REMAINDER 2.534E-15 5.086E-13 1.060E-11 5.283E-17-1.000E+00 1.910E-08 1.890E-08
EFFECTIVE 2.773E-15 5.909E-13 1.231E-11 5.766E-17-1.000E+00 1.010E-07 5.711E-09
SKIN(FGR) 8.574E-14 7.648E-13 1.594E-11 1.250E-14-1.000E+00 0.000E+00 0.000E+00
Pr-143
GONADS 2.130E-17 2.264E-14 4.032E-13 7.930E-19-1.000E+00 4.370E-18 8.990E-18
BREAST 2.550E-17 2.330E-14 4.149E-13 8.160E-19-1.000E+00 2.220E-18 1.090E-18
LUNGS 1.860E-17 1.642E-14 2.923E-13 5.750E-19-1.000E+00 1.330E-08 1.910E-19
RED MARR 1.620E-17 1.493E-14 2.659E-13 5.230E-19-1.000E+00 1.480E-11 1.030E-12

Ref.

BONE SUR 5.930E-17 5.454E-14 9.711E-13 1.910E-18-1.000E+00 1.490E-11 1.030E-12
THYROID 2.050E-17 1.802E-14 3.208E-13 6.310E-19-1.000E+00 1.680E-18 2.660E-20
REMAINDER 1.760E-17 1.642E-14 2.923E-13 5.750E-19-1.000E+00 1.970E-09 4.220E-09
EFFECTIVE 2.100E-17 2.002E-14 3.564E-13 7.010E-19-1.000E+00 2.190E-09 1.270E-09
SKIN(FGR) 1.760E-14 5.711E-11 1.017E-09 2.000E-15-1.000E+00 0.000E+00 0.000E+00
Nd-147
GONADS 6.130E-15 4.218E-12 7.235E-11 1.480E-16-1.000E+00 8.410E-11 1.790E-10
BREAST 7.120E-15 4.132E-12 7.088E-11 1.450E-16-1.000E+00 3.450E-11 1.870E-11
LUNGS 5.820E-15 3.648E-12 6.257E-11 1.280E-16-1.000E+00 1.060E-08 2.440E-12
RED MARR 5.400E-15 3.505E-12 6.013E-11 1.230E-16-1.000E+00 9.190E-11 5.050E-11
BONE SUR 1.320E-14 8.265E-12 1.418E-10 2.900E-16-1.000E+00 3.260E-10 2.220E-11
THYROID 6.120E-15 3.876E-12 6.648E-11 1.360E-16-1.000E+00 1.820E-11 2.640E-13
REMAINDER 5.530E-15 3.562E-12 6.111E-11 1.250E-16-1.000E+00 1.760E-09 3.760E-09
EFFECTIVE 6.190E-15 3.961E-12 6.795E-11 1.390E-16-1.000E+00 1.850E-09 1.180E-09
SKIN(FGR) 1.950E-14 3.135E-11 5.377E-10 1.100E-15-1.000E+00 0.000E+00 0.000E+00
Np-239
GONADS 7.530E-15 4.691E-12 4.380E-11 1.710E-16-1.000E+00 7.450E-11 1.620E-10
BREAST 8.730E-15 4.636E-12 4.329E-11 1.690E-16-1.000E+00 1.630E-11 1.720E-11
LUNGS 7.180E-15 4.115E-12 3.842E-11 1.500E-16-1.000E+00 2.360E-09 2.400E-12
RED MARR 6.500E-15 4.005E-12 3.740E-11 1.460E-16-1.000E+00 2.080E-10 4.660E-11
BONE SUR 2.000E-14 1.001E-11 9.349E-11 3.650E-16-1.000E+00 2.030E-09 3.590E-11
THYROID 7.520E-15 4.197E-12 3.919E-11 1.530E-16-1.000E+00 7.620E-12 2.070E-13
REMAINDER 6.760E-15 4.005E-12 3.740E-11 1.460E-16-1.000E+00 9.590E-10 2.770E-09
EFFECTIVE 7.690E-15 4.471E-12 4.175E-11 1.630E-16-1.000E+00 6.780E-10 8.820E-10
SKIN(FGR) 1.600E-14 7.215E-12 6.737E-11 2.630E-16-1.000E+00 0.000E+00 0.000E+00
Pu-238
GONADS 6.560E-18 4.291E-14 9.011E-13 1.490E-18-1.000E+00 1.040E-05 2.330E-09
BREAST 1.270E-17 5.558E-14 1.167E-12 1.930E-18-1.000E+00 4.400E-10 1.800E-13
LUNGS 1.060E-18 2.267E-15 4.759E-14 7.870E-20-1.000E+00 3.200E-04 8.640E-14
RED MARR 1.680E-18 5.587E-15 1.173E-13 1.940E-19-1.000E+00 5.800E-05 1.270E-08
BONE SUR 9.300E-18 3.514E-14 7.378E-13 1.220E-18-1.000E+00 7.250E-04 1.580E-07
THYROID 4.010E-18 9.792E-15 2.056E-13 3.400E-19-1.000E+00 3.860E-10 7.990E-14
REMAINDER 1.990E-18 9.216E-15 1.935E-13 3.200E-19-1.000E+00 2.740E-05 2.180E-08
EFFECTIVE 4.880E-18 2.413E-14 5.068E-13 8.380E-19-1.000E+00 7.790E-05 1.340E-08
SKIN(FGR) 4.090E-17 2.776E-13 5.830E-12 9.640E-18-1.000E+00 0.000E+00 0.000E+00
Pu-239
GONADS 4.840E-18 1.768E-14 3.713E-13 6.140E-19-1.000E+00 1.200E-05 2.640E-09
BREAST 7.550E-18 2.238E-14 4.699E-13 7.770E-19-1.000E+00 3.990E-10 1.210E-13
LUNGS 2.650E-18 2.267E-15 4.760E-14 7.870E-20-1.000E+00 3.230E-04 7.890E-14
RED MARR 2.670E-18 3.456E-15 7.258E-14 1.200E-19-1.000E+00 6.570E-05 1.410E-08
BONE SUR 9.470E-18 1.673E-14 3.514E-13 5.810E-19-1.000E+00 8.210E-04 1.760E-07
THYROID 3.880E-18 5.126E-15 1.077E-13 1.780E-19-1.000E+00 3.750E-10 7.500E-14
REMAINDER 2.860E-18 4.838E-15 1.016E-13 1.680E-19-1.000E+00 3.020E-05 2.120E-08
EFFECTIVE 4.240E-18 1.057E-14 2.220E-13 3.670E-19-1.000E+00 8.330E-05 1.400E-08
SKIN(FGR) 1.860E-17 1.057E-13 2.220E-12 3.670E-18-1.000E+00 0.000E+00 0.000E+00
Pu-240
GONADS 6.360E-18 4.118E-14 8.649E-13 1.430E-18-1.000E+00 1.200E-05 2.640E-09
BREAST 1.230E-17 5.328E-14 1.119E-12 1.850E-18-1.000E+00 4.330E-10 1.730E-13
LUNGS 1.090E-18 2.249E-15 4.723E-14 7.810E-20-1.000E+00 3.230E-04 8.220E-14
RED MARR 1.650E-18 5.386E-15 1.131E-13 1.870E-19-1.000E+00 6.570E-05 1.410E-08
BONE SUR 9.260E-18 3.398E-14 7.137E-13 1.180E-18-1.000E+00 8.210E-04 1.760E-07
THYROID 3.920E-18 9.446E-15 1.984E-13 3.280E-19-1.000E+00 3.760E-10 7.510E-14
REMAINDER 1.960E-18 8.870E-15 1.863E-13 3.080E-19-1.000E+00 3.020E-05 2.130E-08
EFFECTIVE 4.750E-18 2.313E-14 4.857E-13 8.030E-19-1.000E+00 8.330E-05 1.400E-08
SKIN(FGR) 3.920E-17 2.644E-13 5.552E-12 9.180E-18-1.000E+00 0.000E+00 0.000E+00
Pu-241

Ref.

GONADS 7.190E-20 6.653E-17 1.396E-15 2.310E-21-1.000E+00 2.760E-07 5.660E-11
BREAST 8.670E-20 7.229E-17 1.517E-15 2.510E-21-1.000E+00 2.140E-11 2.790E-15
LUNGS 6.480E-20 4.090E-17 8.584E-16 1.420E-21-1.000E+00 3.180E-06 4.480E-15
RED MARR 5.630E-20 4.003E-17 8.403E-16 1.390E-21-1.000E+00 1.430E-06 2.780E-10
BONE SUR 2.190E-19 1.385E-16 2.908E-15 4.810E-21-1.000E+00 1.780E-05 3.480E-09
THYROID 6.980E-20 4.522E-17 9.491E-16 1.570E-21-1.000E+00 9.150E-12 1.010E-15
REMAINDER 6.090E-20 4.291E-17 9.007E-16 1.490E-21-1.000E+00 6.020E-07 1.850E-10
EFFECTIVE 7.250E-20 5.558E-17 1.167E-15 1.930E-21-1.000E+00 1.340E-06 2.070E-10
SKIN(FGR) 1.170E-19 2.033E-16 4.268E-15 7.060E-21-1.000E+00 0.000E+00 0.000E+00
Am-241
GONADS 8.580E-16 9.360E-13 1.966E-11 3.250E-17-1.000E+00 3.250E-05 2.700E-07
BREAST 1.070E-15 1.014E-12 2.129E-11 3.520E-17-1.000E+00 2.670E-09 2.620E-11
LUNGS 6.740E-16 5.789E-13 1.216E-11 2.010E-17-1.000E+00 1.840E-05 3.360E-11
RED MARR 5.210E-16 4.838E-13 1.016E-11 1.680E-17-1.000E+00 1.740E-04 1.450E-06
BONE SUR 2.870E-15 2.678E-12 5.625E-11 9.300E-17-1.000E+00 2.170E-03 1.810E-05
THYROID 7.830E-16 6.365E-13 1.337E-11 2.210E-17-1.000E+00 1.600E-09 1.320E-11
REMAINDER 6.340E-16 5.933E-13 1.246E-11 2.060E-17-1.000E+00 7.820E-05 6.660E-07
EFFECTIVE 8.180E-16 7.920E-13 1.663E-11 2.750E-17-1.000E+00 1.200E-04 9.840E-07
SKIN(FGR) 1.280E-15 2.396E-12 5.032E-11 8.320E-17-1.000E+00 0.000E+00 0.000E+00
Cm-242
GONADS 7.830E-18 4.893E-14 1.013E-12 1.700E-18-1.000E+00 5.700E-07 5.200E-09
BREAST 1.480E-17 6.159E-14 1.275E-12 2.140E-18-1.000E+00 9.440E-10 8.950E-12
LUNGS 1.130E-18 3.022E-15 6.257E-14 1.050E-19-1.000E+00 1.550E-05 8.840E-12
RED MARR 1.890E-18 6.562E-15 1.359E-13 2.280E-19-1.000E+00 3.900E-06 3.570E-08
BONE SUR 1.060E-17 4.231E-14 8.759E-13 1.470E-18-1.000E+00 4.870E-05 4.460E-07
THYROID 4.910E-18 1.261E-14 2.610E-13 4.380E-19-1.000E+00 9.410E-10 8.820E-12
REMAINDER 2.270E-18 1.079E-14 2.235E-13 3.750E-19-1.000E+00 2.450E-06 4.020E-08
EFFECTIVE 5.690E-18 2.751E-14 5.697E-13 9.560E-19-1.000E+00 4.670E-06 3.100E-08
SKIN(FGR) 4.290E-17 2.700E-13 5.589E-12 9.380E-18-1.000E+00 0.000E+00 0.000E+00
Cm-244
GONADS 6.900E-18 4.522E-14 9.492E-13 1.570E-18-1.000E+00 1.590E-05 1.330E-07
BREAST 1.330E-17 5.702E-14 1.197E-12 1.980E-18-1.000E+00 1.040E-09 8.820E-12
LUNGS 7.080E-19 2.592E-15 5.441E-14 9.000E-20-1.000E+00 1.930E-05 8.810E-12
RED MARR 1.460E-18 5.875E-15 1.233E-13 2.040E-19-1.000E+00 9.380E-05 7.820E-07
BONE SUR 8.820E-18 3.859E-14 8.101E-13 1.340E-18-1.000E+00 1.170E-03 9.770E-06
THYROID 4.190E-18 1.146E-14 2.406E-13 3.980E-19-1.000E+00 1.010E-09 8.440E-12
REMAINDER 1.810E-18 9.821E-15 2.062E-13 3.410E-19-1.000E+00 4.780E-05 4.150E-07
EFFECTIVE 4.910E-18 2.529E-14 5.308E-13 8.780E-19-1.000E+00 6.700E-05 5.450E-07
SKIN(FGR) 3.910E-17 2.506E-13 5.260E-12 8.700E-18-1.000E+00 0.000E+00 0.000E+00

Ref.

Appendix D3: RADTRAD OUTPUT File (.o0) Excerpts for Case 1A
(LIMITING CASE: Core Spray Division Electrical Failure
Appendix D3.1: NMP1-Case 1Aa.o0 (MSIV Leakage & Permanent Bypass)

##

I-131 Summary

##

Time (hr)	DW I-131 (Curies)	WW I-131 (Curies)	RB I-131 (Curies)
0.001	2.8009E+03	0.0000E+00	0.0000E+00
0.010	4.0662E+04	0.0000E+00	0.0000E+00
0.031	7.9873E+04	0.0000E+00	0.0000E+00
0.260	2.5478E+05	0.0000E+00	0.0000E+00
0.496	2.7019E+05	0.0000E+00	0.0000E+00
0.500	2.5913E+05	0.0000E+00	0.0000E+00
0.524	2.6930E+05	0.0000E+00	0.0000E+00
0.529	2.8219E+05	0.0000E+00	0.0000E+00
0.700	3.8104E+05	0.0000E+00	0.0000E+00
0.800	3.8407E+05	0.0000E+00	0.0000E+00
1.000	4.3655E+05	0.0000E+00	0.0000E+00
1.178	4.3951E+05	0.0000E+00	0.0000E+00
1.478	4.4291E+05	0.0000E+00	0.0000E+00
1.778	4.4628E+05	0.0000E+00	0.0000E+00
1.985	4.4860E+05	0.0000E+00	0.0000E+00
2.000	5.4180E+05	0.0000E+00	0.0000E+00
2.033	4.6306E+05	0.0000E+00	0.0000E+00
2.211	1.6661E+05	1.1450E+05	0.0000E+00
2.500	7.9250E+04	5.4301E+04	0.0000E+00
2.727	4.7407E+04	3.2361E+04	0.0000E+00
3.127	3.0298E+04	2.0422E+04	0.0000E+00
3.427	2.3386E+04	1.5722E+04	0.0000E+00
3.727	1.9320E+04	1.2957E+04	0.0000E+00
4.027	1.6925E+04	1.1329E+04	0.0000E+00
4.280	1.5685E+04	1.0485E+04	0.0000E+00
4.580	1.5018E+04	1.0026E+04	0.0000E+00
4.880	1.4544E+04	9.7054E+03	0.0000E+00
4.952	1.4453E+04	9.6441E+03	0.0000E+00
5.252	1.4144E+04	9.4351E+03	0.0000E+00
5.552	1.3922E+04	9.2859E+03	0.0000E+00
5.852	1.3763E+04	9.1783E+03	0.0000E+00
6.000	1.3701E+04	9.1366E+03	0.0000E+00
6.300	1.3601E+04	9.0689E+03	4.2058E+00
6.600	1.3525E+04	9.0182E+03	8.2675E+00
6.900	1.3468E+04	8.9793E+03	1.2196E+01
7.200	1.3422E+04	8.9486E+03	1.5999E+01
7.500	1.3385E+04	8.9237E+03	1.9683E+01
7.800	1.3354E+04	8.9027E+03	2.3254E+01
7.995	1.3336E+04	8.8907E+03	2.5515E+01
8.000	1.3335E+04	8.8904E+03	2.5574E+01
8.400	1.3302E+04	8.8684E+03	3.0075E+01
8.700	1.3280E+04	8.8536E+03	3.3333E+01
9.000	1.3259E+04	8.8397E+03	3.6493E+01
9.300	1.3240E+04	8.8266E+03	3.9559E+01
9.600	1.3221E+04	8.8138E+03	4.2534E+01

Project: Nine Mile Point Nuclear Station Unit: __1_ Disposition: ____

Originator/Date	Reviewer/Date	Calculation No.	Revision
J. Metcalf 12/12/06	D. Leaver 12/12/06	H21C092	00

Ref.

9.900	1.3202E+04	8.8015E+03	4.5420E+01
10.200	1.3184E+04	8.7893E+03	4.8220E+01
14.990	1.2907E+04	8.6044E+03	8.3060E+01
24.000	1.2404E+04	8.2692E+03	1.1539E+02
24.047	1.2401E+04	8.2676E+03	1.1519E+02
96.000	9.2989E+03	6.1992E+03	5.3769E+01
720.000	7.6565E+02	5.1043E+02	4.4231E+00

	SL	Environment	Pool
Time (hr)	I-131 (Curies)	I-131 (Curies)	I-131 (Curies)
0.001	8.9226E-05	3.7063E-05	0.0000E+00
0.010	2.5582E-02	1.0707E-02	0.0000E+00
0.031	1.7319E-01	7.3702E-02	0.0000E+00
0.260	3.8369E+00	1.9252E+00	0.0000E+00
0.496	9.3933E+00	5.4025E+00	0.0000E+00
0.500	9.4688E+00	5.4596E+00	0.0000E+00
0.524	9.9449E+00	5.8262E+00	0.0000E+00
0.529	1.0059E+01	5.9134E+00	0.0000E+00
0.700	1.5038E+01	9.4642E+00	0.0000E+00
0.800	1.7888E+01	1.1794E+01	0.0000E+00
1.000	2.3714E+01	1.7087E+01	0.0000E+00
1.178	2.8361E+01	2.2214E+01	0.0000E+00
1.478	3.4690E+01	3.1434E+01	0.0000E+00
1.778	3.9772E+01	4.1247E+01	0.0000E+00
1.985	4.2748E+01	4.8316E+01	0.0000E+00
2.000	4.3034E+01	4.8878E+01	0.0000E+00
2.033	4.3667E+01	5.0123E+01	0.0000E+00
2.211	4.1368E+01	5.4298E+01	0.0000E+00
2.500	3.6200E+01	5.9343E+01	0.0000E+00
2.727	3.1853E+01	6.2386E+01	0.0000E+00
3.127	2.5365E+01	6.6660E+01	0.0000E+00
3.427	2.1641E+01	6.9267E+01	0.0000E+00
3.727	1.8742E+01	7.1510E+01	0.0000E+00
4.027	1.6516E+01	7.3487E+01	0.0000E+00
4.280	1.5058E+01	7.5003E+01	0.0000E+00
4.580	1.3735E+01	7.6662E+01	0.0000E+00
4.880	1.2751E+01	7.8213E+01	0.0000E+00
4.952	1.2557E+01	7.8569E+01	0.0000E+00
5.252	1.2017E+01	8.0031E+01	0.0000E+00
5.552	1.1593E+01	8.1447E+01	0.0000E+00
5.852	1.1261E+01	8.2827E+01	0.0000E+00
6.000	1.1126E+01	8.3497E+01	0.0000E+00
6.300	1.0899E+01	8.4839E+01	0.0000E+00
6.600	1.0725E+01	8.6161E+01	0.0000E+00
6.900	1.0591E+01	8.7469E+01	0.0000E+00
7.200	1.0489E+01	8.8766E+01	0.0000E+00
7.500	1.0411E+01	9.0054E+01	0.0000E+00
7.800	1.0354E+01	9.1336E+01	0.0000E+00
7.995	1.0324E+01	9.2165E+01	0.0000E+00
8.000	1.0324E+01	9.2187E+01	0.0000E+00
8.400	1.0295E+01	9.3886E+01	0.0000E+00
8.700	1.0278E+01	9.5157E+01	0.0000E+00
9.000	1.0265E+01	9.6427E+01	0.0000E+00
9.300	1.0254E+01	9.7695E+01	0.0000E+00
9.600	1.0245E+01	9.8961E+01	0.0000E+00
9.900	1.0238E+01	1.0023E+02	0.0000E+00

Ref.

10.200	1.0231E+01	1.0149E+02	0.0000E+00
14.990	1.0127E+01	1.2153E+02	0.0000E+00
24.000	9.7818E+00	1.5827E+02	0.0000E+00
24.047	9.7800E+00	1.5836E+02	0.0000E+00
96.000	7.3364E+00	2.8348E+02	0.0000E+00
720.000	6.0407E-01	6.2760E+02	0.0000E+00

Time (hr)	Dummy I-131 (Curies)	Control Room I-131 (Curies)
0.001	4.8858E-04	2.0621E-09
0.010	1.4078E-01	5.9398E-07
0.031	9.6323E-01	4.0607E-06
0.260	2.3806E+01	9.8700E-05
0.496	6.3192E+01	2.5432E-04
0.500	6.3803E+01	2.5664E-04
0.524	6.7703E+01	2.8693E-04
0.529	6.8633E+01	2.9410E-04
0.700	1.0674E+02	5.7657E-04
0.800	1.3070E+02	7.4560E-04
1.000	1.8347E+02	1.0994E-03
1.178	2.3205E+02	1.4022E-03
1.478	3.1448E+02	1.8656E-03
1.778	3.9747E+02	2.2728E-03
1.985	4.5505E+02	2.5244E-03
2.000	4.5973E+02	2.5453E-03
2.033	4.7011E+02	2.5915E-03
2.211	5.0994E+02	2.5851E-03
2.500	5.4501E+02	2.4271E-03
2.727	5.5927E+02	2.1251E-03
3.127	5.7436E+02	1.6778E-03
3.427	5.8207E+02	1.4105E-03
3.727	5.8809E+02	1.1927E-03
4.027	5.9310E+02	1.0166E-03
4.280	5.9687E+02	8.9521E-04
4.580	6.0103E+02	7.7869E-04
4.880	6.0501E+02	6.8637E-04
4.952	6.0594E+02	6.6740E-04
5.252	6.0976E+02	5.9897E-04
5.552	6.1350E+02	5.4572E-04
5.852	6.1717E+02	5.0433E-04
6.000	6.1896E+02	4.8746E-04
6.300	6.1831E+02	4.5915E-04
6.600	6.1767E+02	4.3724E-04
6.900	6.1705E+02	4.2034E-04
7.200	6.1643E+02	4.0734E-04
7.500	6.1582E+02	3.9737E-04
7.800	6.1523E+02	3.8976E-04
7.995	6.1485E+02	3.8583E-04
8.000	6.1484E+02	3.8573E-04
8.400	6.1407E+02	3.0492E-04
8.700	6.1350E+02	2.6156E-04
9.000	6.1295E+02	2.2894E-04
9.300	6.1240E+02	2.0442E-04
9.600	6.1186E+02	1.8598E-04
9.900	6.1133E+02	1.7211E-04
10.200	6.1081E+02	1.6169E-04

Ref.

14.990	6.0342E+02	1.2992E-04
24.000	5.9261E+02	1.2551E-04
24.047	5.9256E+02	1.2235E-04
96.000	4.9717E+02	3.9783E-05
720.000	8.1351E+01	2.8452E-06

##

Cumulative Dose Summary

##

	EAB		LPZ		Control Room	
Time	Thyroid	TEDE	Thyroid	TEDE	Thyroid	TEDE
(hr)	(rem)	(rem)	(rem)	(rem)	(rem)	(rem)
0.001	0.0000E+00	0.0000E+00	3.2426E-07	1.6522E-08	2.8953E-10	1.2950E-11
0.010	0.0000E+00	0.0000E+00	9.3672E-05	4.8117E-06	1.3848E-06	6.2170E-08
0.031	0.0000E+00	0.0000E+00	6.4467E-04	3.3722E-05	2.5730E-05	1.1635E-06
0.260	0.0000E+00	0.0000E+00	1.6817E-02	9.8094E-04	4.9562E-03	2.3809E-04
0.496	0.0000E+00	0.0000E+00	4.7117E-02	2.8194E-03	2.6012E-02	1.2711E-03
0.500	0.0000E+00	0.0000E+00	4.7614E-02	2.8502E-03	2.6487E-02	1.2948E-03
0.524	3.7543E-02	2.7506E-03	5.0834E-02	3.0862E-03	2.9709E-02	1.4578E-03
0.529	4.6557E-02	3.4957E-03	5.1608E-02	3.1501E-03	3.0498E-02	1.4984E-03
0.700	4.1849E-01	4.0889E-02	8.3515E-02	6.3581E-03	6.8149E-02	3.8939E-03
0.800	6.6299E-01	6.8668E-02	1.0449E-01	8.7412E-03	1.0213E-01	6.4407E-03
1.000	1.2181E+00	1.3640E-01	1.5211E-01	1.4552E-02	1.9684E-01	1.4419E-02
1.178	1.7548E+00	2.0731E-01	1.9816E-01	2.0636E-02	3.1153E-01	2.5086E-02
1.478	2.7173E+00	3.4644E-01	2.8073E-01	3.2571E-02	5.6466E-01	5.0920E-02
1.778	3.7382E+00	5.0860E-01	3.6831E-01	4.6483E-02	8.8436E-01	8.6850E-02
1.985	4.4712E+00	6.3320E-01	4.3119E-01	5.7173E-02	1.1392E+00	1.1752E-01
2.000	4.5293E+00	6.4306E-01	4.3618E-01	5.8018E-02	1.1589E+00	1.1999E-01
2.033	4.6582E+00	6.6485E-01	4.4723E-01	5.9887E-02	1.2027E+00	1.2547E-01
2.211	5.0892E+00	7.4541E-01	4.8421E-01	6.6798E-02	1.4384E+00	1.5539E-01
2.500	5.6073E+00	8.6102E-01	5.2866E-01	7.6717E-02	1.8094E+00	2.0520E-01
2.727	5.6073E+00	8.6102E-01	5.5530E-01	8.3794E-02	2.0716E+00	2.4265E-01
3.127	5.6073E+00	8.6102E-01	5.9243E-01	9.5358E-02	2.4550E+00	3.0059E-01
3.427	5.6073E+00	8.6102E-01	6.1489E-01	1.0345E-01	2.6878E+00	3.3800E-01
3.727	5.6073E+00	8.6102E-01	6.3407E-01	1.1110E-01	2.8831E+00	3.7106E-01
4.027	5.6073E+00	8.6102E-01	6.5085E-01	1.1836E-01	3.0480E+00	4.0055E-01
4.280	5.6073E+00	8.6102E-01	6.6364E-01	1.2422E-01	3.1682E+00	4.2317E-01
4.580	5.6073E+00	8.6102E-01	6.7754E-01	1.3086E-01	3.2919E+00	4.4754E-01
4.880	5.6073E+00	8.6102E-01	6.9046E-01	1.3722E-01	3.3996E+00	4.6986E-01
4.952	5.6073E+00	8.6102E-01	6.9342E-01	1.3870E-01	3.4233E+00	4.7493E-01
5.252	5.6073E+00	8.6102E-01	7.0552E-01	1.4473E-01	3.5157E+00	4.9509E-01
5.552	5.6073E+00	8.6102E-01	7.1718E-01	1.5054E-01	3.5988E+00	5.1386E-01
5.852	5.6073E+00	8.6102E-01	7.2850E-01	1.5611E-01	3.6746E+00	5.3141E-01
6.000	5.6073E+00	8.6102E-01	7.3398E-01	1.5877E-01	3.7098E+00	5.3967E-01
6.300	5.6073E+00	8.6102E-01	7.4491E-01	1.6399E-01	3.7776E+00	5.5561E-01
6.600	5.6073E+00	8.6102E-01	7.5565E-01	1.6899E-01	3.8414E+00	5.7067E-01
6.900	5.6073E+00	8.6102E-01	7.6623E-01	1.7379E-01	3.9022E+00	5.8493E-01
7.200	5.6073E+00	8.6102E-01	7.7669E-01	1.7839E-01	3.9606E+00	5.9845E-01
7.500	5.6073E+00	8.6102E-01	7.8704E-01	1.8280E-01	4.0172E+00	6.1129E-01
7.800	5.6073E+00	8.6102E-01	7.9732E-01	1.8704E-01	4.0723E+00	6.2351E-01
7.995	5.6073E+00	8.6102E-01	8.0395E-01	1.8969E-01	4.1074E+00	6.3113E-01
8.000	5.6073E+00	8.6102E-01	8.0412E-01	1.8976E-01	4.1083E+00	6.3133E-01
8.400	5.6073E+00	8.6102E-01	8.0882E-01	1.9312E-01	4.1720E+00	6.4504E-01
8.700	5.6073E+00	8.6102E-01	8.1233E-01	1.9552E-01	4.2111E+00	6.5331E-01
9.000	5.6073E+00	8.6102E-01	8.1582E-01	1.9784E-01	4.2449E+00	6.6020E-01

Ref.

9.300	5.6073E+00	8.6102E-01	8.1930E-01	2.0006E-01	4.2747E+00	6.6603E-01
9.600	5.6073E+00	8.6102E-01	8.2277E-01	2.0219E-01	4.3015E+00	6.7104E-01
9.900	5.6073E+00	8.6102E-01	8.2623E-01	2.0424E-01	4.3260E+00	6.7542E-01
10.200	5.6073E+00	8.6102E-01	8.2967E-01	2.0621E-01	4.3488E+00	6.7933E-01
14.990	5.6073E+00	8.6102E-01	8.8339E-01	2.3064E-01	4.6419E+00	7.1950E-01
24.000	5.6073E+00	8.6102E-01	9.7817E-01	2.5827E-01	5.1358E+00	7.6425E-01
24.047	5.6073E+00	8.6102E-01	9.7830E-01	2.5830E-01	5.1373E+00	7.6435E-01
96.000	5.6073E+00	8.6102E-01	1.1347E+00	2.7880E-01	5.9184E+00	8.0541E-01
720.000	5.6073E+00	8.6102E-01	1.2526E+00	2.8975E-01	7.0529E+00	8.5501E-01

##

Worst Two-Hour Doses

Note: All of the dose locations are shown below but the worst two-hour dose is only meaningful for the EAB dose location. Please disregard the two-hour worst doses for the other dose locations

##

EAB

Time (hr)	Whole Body (rem)	Thyroid (rem)	TEDE (rem)
0.5	4.3460E-01	5.6073E+00	8.6102E-01

LPZ

Time (hr)	Whole Body (rem)	Thyroid (rem)	TEDE (rem)
0.8	4.2242E-02	4.5766E-01	7.7176E-02

Control Room

Time (hr)	Whole Body (rem)	Thyroid (rem)	TEDE (rem)
1.5	7.9693E-02	2.1471E+00	2.9249E-01

Ref.

Appendix D3.2: NMP1-Case 1Ab.o0 (Temporary Bypass)

##

I-131 Summary

##

Time (hr)	DW I-131 (Curies)	WW I-131 (Curies)	RB I-131 (Curies)
0.001	2.8009E+03	0.0000E+00	0.0000E+00
0.010	4.0662E+04	0.0000E+00	0.0000E+00
0.031	7.9873E+04	0.0000E+00	0.0000E+00
0.260	2.5478E+05	0.0000E+00	0.0000E+00
0.496	2.7019E+05	0.0000E+00	0.0000E+00
0.500	2.5913E+05	0.0000E+00	0.0000E+00
0.524	2.6930E+05	0.0000E+00	0.0000E+00
0.529	2.8219E+05	0.0000E+00	0.0000E+00
0.700	3.8104E+05	0.0000E+00	0.0000E+00
0.800	3.8407E+05	0.0000E+00	0.0000E+00
1.000	4.3655E+05	0.0000E+00	0.0000E+00
1.178	4.3951E+05	0.0000E+00	0.0000E+00
1.478	4.4291E+05	0.0000E+00	0.0000E+00
1.778	4.4628E+05	0.0000E+00	0.0000E+00
1.985	4.4860E+05	0.0000E+00	0.0000E+00
2.000	5.4180E+05	0.0000E+00	0.0000E+00
2.033	4.6306E+05	0.0000E+00	0.0000E+00
2.211	1.6661E+05	1.1450E+05	0.0000E+00
2.500	7.9250E+04	5.4301E+04	0.0000E+00
2.727	4.7407E+04	3.2361E+04	0.0000E+00
3.127	3.0298E+04	2.0422E+04	0.0000E+00
3.427	2.3386E+04	1.5722E+04	0.0000E+00
3.727	1.9320E+04	1.2957E+04	0.0000E+00
4.027	1.6925E+04	1.1329E+04	0.0000E+00
4.280	1.5685E+04	1.0485E+04	0.0000E+00
4.580	1.5018E+04	1.0026E+04	0.0000E+00
4.880	1.4544E+04	9.7054E+03	0.0000E+00
4.952	1.4453E+04	9.6441E+03	0.0000E+00
5.252	1.4144E+04	9.4351E+03	0.0000E+00
5.552	1.3922E+04	9.2859E+03	0.0000E+00
5.852	1.3763E+04	9.1783E+03	0.0000E+00
6.000	1.3701E+04	9.1366E+03	0.0000E+00
6.300	1.3601E+04	9.0689E+03	4.2058E+00
6.600	1.3525E+04	9.0182E+03	8.2675E+00
6.900	1.3468E+04	8.9793E+03	1.2196E+01
7.200	1.3422E+04	8.9486E+03	1.5999E+01
7.500	1.3385E+04	8.9237E+03	1.9683E+01
7.800	1.3354E+04	8.9027E+03	2.3254E+01
7.995	1.3336E+04	8.8907E+03	2.5515E+01
8.000	1.3335E+04	8.8904E+03	2.5574E+01
8.400	1.3302E+04	8.8684E+03	3.0075E+01
8.700	1.3280E+04	8.8536E+03	3.3333E+01
9.000	1.3259E+04	8.8397E+03	3.6493E+01
9.300	1.3240E+04	8.8266E+03	3.9559E+01
9.600	1.3221E+04	8.8138E+03	4.2534E+01
9.900	1.3202E+04	8.8015E+03	4.5420E+01
10.200	1.3184E+04	8.7893E+03	4.8220E+01

Project: Nine Mile Point Nuclear Station Unit: __1_ Disposition: ____

Originator/Date	Reviewer/Date	Calculation No.	Revision
J. Metcalf 12/12/06	D. Leaver 12/12/06	H21C092	00

Ref.

14.990	1.2907E+04	8.6044E+03	8.3060E+01
24.000	1.2404E+04	8.2692E+03	1.1539E+02
24.047	1.2401E+04	8.2676E+03	1.1519E+02
96.000	9.2989E+03	6.1992E+03	5.3769E+01
720.000	7.6565E+02	5.1043E+02	4.4231E+00

	SL	Environment	Pool
Time (hr)	I-131 (Curies)	I-131 (Curies)	I-131 (Curies)
0.001	8.9226E-05	4.8858E-04	0.0000E+00
0.010	2.5582E-02	1.4078E-01	0.0000E+00
0.031	1.7319E-01	9.6324E-01	0.0000E+00
0.260	3.8369E+00	2.3811E+01	0.0000E+00
0.496	9.3933E+00	6.3228E+01	0.0000E+00
0.500	9.4688E+00	6.3840E+01	0.0000E+00
0.524	9.9449E+00	6.7745E+01	0.0000E+00
0.529	1.0059E+01	6.8676E+01	0.0000E+00
0.700	1.5038E+01	1.0683E+02	0.0000E+00
0.800	1.7888E+01	1.3083E+02	0.0000E+00
1.000	2.3714E+01	1.8371E+02	0.0000E+00
1.178	2.8361E+01	2.3240E+02	0.0000E+00
1.478	3.4690E+01	3.1512E+02	0.0000E+00
1.778	3.9772E+01	3.9847E+02	0.0000E+00
1.985	4.2748E+01	4.5635E+02	0.0000E+00
2.000	4.3034E+01	4.6106E+02	0.0000E+00
2.033	4.3667E+01	4.7149E+02	0.0000E+00
2.211	4.1368E+01	5.1162E+02	0.0000E+00
2.500	3.6200E+01	5.4723E+02	0.0000E+00
2.727	3.1853E+01	5.6193E+02	0.0000E+00
3.127	2.5365E+01	5.7782E+02	0.0000E+00
3.427	2.1641E+01	5.8614E+02	0.0000E+00
3.727	1.8742E+01	5.9278E+02	0.0000E+00
4.027	1.6516E+01	5.9842E+02	0.0000E+00
4.280	1.5058E+01	6.0272E+02	0.0000E+00
4.580	1.3735E+01	6.0752E+02	0.0000E+00
4.880	1.2751E+01	6.1213E+02	0.0000E+00
4.952	1.2557E+01	6.1321E+02	0.0000E+00
5.252	1.2017E+01	6.1768E+02	0.0000E+00
5.552	1.1593E+01	6.2207E+02	0.0000E+00
5.852	1.1261E+01	6.2639E+02	0.0000E+00
6.000	1.1126E+01	6.2851E+02	0.0000E+00
6.300	1.0899E+01	6.2851E+02	0.0000E+00
6.600	1.0725E+01	6.2851E+02	0.0000E+00
6.900	1.0591E+01	6.2851E+02	0.0000E+00
7.200	1.0489E+01	6.2851E+02	0.0000E+00
7.500	1.0411E+01	6.2851E+02	0.0000E+00
7.800	1.0354E+01	6.2851E+02	0.0000E+00
7.995	1.0324E+01	6.2851E+02	0.0000E+00
8.000	1.0324E+01	6.2851E+02	0.0000E+00
8.400	1.0295E+01	6.2851E+02	0.0000E+00
8.700	1.0278E+01	6.2851E+02	0.0000E+00
9.000	1.0265E+01	6.2851E+02	0.0000E+00
9.300	1.0254E+01	6.2851E+02	0.0000E+00
9.600	1.0245E+01	6.2851E+02	0.0000E+00
9.900	1.0238E+01	6.2851E+02	0.0000E+00
10.200	1.0231E+01	6.2851E+02	0.0000E+00
14.990	1.0127E+01	6.2851E+02	0.0000E+00

Project: Nine Mile Point Nuclear Station Unit: __1_ Disposition: ____

Originator/Date	Reviewer/Date	Calculation No.	Revision
J. Metcalf 12/12/06	D. Leaver 12/12/06	H21C092	00

Ref.

24.000	9.7818E+00	6.2851E+02	0.0000E+00
24.047	9.7800E+00	6.2851E+02	0.0000E+00
96.000	7.3364E+00	6.2851E+02	0.0000E+00
720.000	6.0407E-01	6.2851E+02	0.0000E+00

Time (hr)	Dummy I-131 (Curies)	Control Room I-131 (Curies)
0.001	7.4008E-05	1.2119E-08
0.010	2.1350E-02	3.4814E-06
0.031	1.4648E-01	2.3649E-05
0.260	3.7155E+00	5.4215E-04
0.496	1.0141E+01	1.3142E-03
0.500	1.0243E+01	1.3248E-03
0.524	1.0900E+01	1.4736E-03
0.529	1.1057E+01	1.5089E-03
0.700	1.7447E+01	2.9128E-03
0.800	2.1554E+01	3.7065E-03
1.000	3.0751E+01	5.3000E-03
1.178	3.9450E+01	6.5567E-03
1.478	5.4682E+01	8.2850E-03
1.778	7.0487E+01	9.6250E-03
1.985	8.1676E+01	1.0374E-02
2.000	8.2574E+01	1.0445E-02
2.033	8.4564E+01	1.0601E-02
2.211	9.0426E+01	1.0692E-02
2.500	9.6788E+01	9.6136E-03
2.727	1.0027E+02	8.1149E-03
3.127	1.0486E+02	5.9360E-03
3.427	1.0753E+02	4.6913E-03
3.727	1.0977E+02	3.7187E-03
4.027	1.1169E+02	2.9655E-03
4.280	1.1314E+02	2.4659E-03
4.580	1.1471E+02	2.0048E-03
4.880	1.1615E+02	1.6539E-03
4.952	1.1648E+02	1.5835E-03
5.252	1.1783E+02	1.3336E-03
5.552	1.1913E+02	1.1437E-03
5.852	1.2039E+02	9.9954E-04
6.000	1.2100E+02	9.4177E-04
6.300	1.2222E+02	7.0865E-04
6.600	1.2343E+02	5.3324E-04
6.900	1.2464E+02	4.0125E-04
7.200	1.2584E+02	3.0193E-04
7.500	1.2704E+02	2.2719E-04
7.800	1.2825E+02	1.7095E-04
7.995	1.2903E+02	1.4213E-04
8.000	1.2905E+02	1.4143E-04
8.400	1.3067E+02	9.6796E-05
8.700	1.3189E+02	7.2835E-05
9.000	1.3311E+02	5.4806E-05
9.300	1.3434E+02	4.1240E-05
9.600	1.3557E+02	3.1032E-05
9.900	1.3681E+02	2.3350E-05
10.200	1.3806E+02	1.7570E-05
14.990	1.5849E+02	1.8736E-07
24.000	1.9789E+02	3.6572E-11

Ref.

24.047	1.9800E+02	3.4978E-11
96.000	3.0168E+02	8.3059E-41
720.000	1.4854E+02	1.0078-297

##

Cumulative Dose Summary

##

	EAB		LPZ		Control Room	
Time	Thyroid	TEDE	Thyroid	TEDE	Thyroid	TEDE
(hr)	(rem)	(rem)	(rem)	(rem)	(rem)	(rem)
0.001	0.0000E+00	0.0000E+00	4.2747E-06	2.1177E-07	1.7016E-09	7.4970E-11
0.010	0.0000E+00	0.0000E+00	1.2317E-03	6.1237E-05	8.1172E-06	3.5807E-07
0.031	0.0000E+00	0.0000E+00	8.4257E-03	4.2238E-04	1.5002E-04	6.6354E-06
0.260	0.0000E+00	0.0000E+00	2.0802E-01	1.1047E-02	2.7553E-02	1.2556E-03
0.496	0.0000E+00	0.0000E+00	5.5155E-01	2.9756E-02	1.3918E-01	6.4158E-03
0.500	0.0000E+00	0.0000E+00	5.5686E-01	3.0051E-02	1.4163E-01	6.5303E-03
0.524	4.0102E-01	2.7223E-02	5.9127E-01	3.2387E-02	1.5823E-01	7.3183E-03
0.529	4.9769E-01	3.4806E-02	5.9956E-01	3.3037E-02	1.6228E-01	7.5150E-03
0.700	4.5165E+00	4.1393E-01	9.4434E-01	6.5562E-02	3.5433E-01	1.9323E-02
0.800	7.0483E+00	6.7441E-01	1.1615E+00	8.7909E-02	5.2507E-01	3.1692E-02
1.000	1.2619E+01	1.2717E+00	1.6394E+00	1.3915E-01	9.8987E-01	6.8893E-02
1.178	1.7736E+01	1.8485E+00	2.0784E+00	1.8863E-01	1.5361E+00	1.1609E-01
1.478	2.6404E+01	2.8821E+00	2.8221E+00	2.7731E-01	2.6920E+00	2.2284E-01
1.778	3.5107E+01	3.9825E+00	3.5687E+00	3.7171E-01	4.0820E+00	3.5998E-01
1.985	4.1132E+01	4.7759E+00	4.0856E+00	4.3978E-01	5.1485E+00	4.7020E-01
2.000	4.1621E+01	4.8395E+00	4.1276E+00	4.4523E-01	5.2298E+00	4.7882E-01
2.033	4.2706E+01	4.9799E+00	4.2206E+00	4.5727E-01	5.4099E+00	4.9791E-01
2.211	4.6868E+01	5.5891E+00	4.5777E+00	5.0954E-01	6.3855E+00	6.0250E-01
2.500	5.0544E+01	6.3073E+00	4.8930E+00	5.7115E-01	7.8993E+00	7.7339E-01
2.727	5.0544E+01	6.3073E+00	5.0220E+00	6.0804E-01	8.9247E+00	8.9674E-01
3.127	5.0544E+01	6.3073E+00	5.1600E+00	6.6298E-01	1.0344E+01	1.0783E+00
3.427	5.0544E+01	6.3073E+00	5.2315E+00	6.9935E-01	1.1147E+01	1.1885E+00
3.727	5.0544E+01	6.3073E+00	5.2879E+00	7.3246E-01	1.1781E+01	1.2808E+00
4.027	5.0544E+01	6.3073E+00	5.3353E+00	7.6294E-01	1.2282E+01	1.3587E+00
4.280	5.0544E+01	6.3073E+00	5.3713E+00	7.8700E-01	1.2625E+01	1.4154E+00
4.580	5.0544E+01	6.3073E+00	5.4111E+00	8.1390E-01	1.2957E+01	1.4737E+00
4.880	5.0544E+01	6.3073E+00	5.4493E+00	8.3939E-01	1.3227E+01	1.5243E+00
4.952	5.0544E+01	6.3073E+00	5.4582E+00	8.4526E-01	1.3284E+01	1.5355E+00
5.252	5.0544E+01	6.3073E+00	5.4949E+00	8.6895E-01	1.3498E+01	1.5787E+00
5.552	5.0544E+01	6.3073E+00	5.5308E+00	8.9131E-01	1.3679E+01	1.6172E+00
5.852	5.0544E+01	6.3073E+00	5.5661E+00	9.1241E-01	1.3834E+01	1.6519E+00
6.000	5.0544E+01	6.3073E+00	5.5833E+00	9.2239E-01	1.3904E+01	1.6677E+00
6.300	5.0544E+01	6.3073E+00	5.5834E+00	9.2240E-01	1.4022E+01	1.6954E+00
6.600	5.0544E+01	6.3073E+00	5.5834E+00	9.2240E-01	1.4111E+01	1.7163E+00
6.900	5.0544E+01	6.3073E+00	5.5834E+00	9.2240E-01	1.4178E+01	1.7317E+00
7.200	5.0544E+01	6.3073E+00	5.5834E+00	9.2241E-01	1.4228E+01	1.7429E+00
7.500	5.0544E+01	6.3073E+00	5.5834E+00	9.2241E-01	1.4266E+01	1.7510E+00
7.800	5.0544E+01	6.3073E+00	5.5834E+00	9.2241E-01	1.4294E+01	1.7568E+00
7.995	5.0544E+01	6.3073E+00	5.5834E+00	9.2241E-01	1.4308E+01	1.7597E+00
8.000	5.0544E+01	6.3073E+00	5.5834E+00	9.2241E-01	1.4308E+01	1.7597E+00
8.400	5.0544E+01	6.3073E+00	5.5834E+00	9.2241E-01	1.4331E+01	1.7640E+00
8.700	5.0544E+01	6.3073E+00	5.5834E+00	9.2241E-01	1.4343E+01	1.7662E+00
9.000	5.0544E+01	6.3073E+00	5.5834E+00	9.2241E-01	1.4352E+01	1.7677E+00
9.300	5.0544E+01	6.3073E+00	5.5834E+00	9.2241E-01	1.4358E+01	1.7689E+00
9.600	5.0544E+01	6.3073E+00	5.5834E+00	9.2241E-01	1.4363E+01	1.7697E+00

Ref.

```
 9.900 5.0544E+01 6.3073E+00 5.5834E+00 9.2241E-01 1.4367E+01 1.7703E+00
10.200 5.0544E+01 6.3073E+00 5.5834E+00 9.2241E-01 1.4370E+01 1.7707E+00
14.990 5.0544E+01 6.3073E+00 5.5834E+00 9.2241E-01 1.4378E+01 1.7719E+00
24.000 5.0544E+01 6.3073E+00 5.5834E+00 9.2241E-01 1.4379E+01 1.7719E+00
24.047 5.0544E+01 6.3073E+00 5.5834E+00 9.2241E-01 1.4379E+01 1.7719E+00
96.000 5.0544E+01 6.3073E+00 5.5834E+00 9.2241E-01 1.4379E+01 1.7719E+00
720.000 5.0544E+01 6.3073E+00 5.5834E+00 9.2241E-01 1.4379E+01 1.7719E+00

#################################################################
              Worst Two-Hour Doses
   Note: All of the dose locations are shown below but the
       worst two-hour dose is only meaningful for the EAB
       dose location.  Please disregard the two-hour worst
       doses for the other dose locations
#################################################################

EAB
  Time   Whole Body   Thyroid      TEDE
  (hr)    (rem)       (rem)       (rem)
   0.5   2.3084E+00   5.0544E+01   6.3073E+00

LPZ
  Time   Whole Body   Thyroid      TEDE
  (hr)    (rem)       (rem)       (rem)
   0.5   1.9804E-01   4.3361E+00   5.4110E-01

Control Room
  Time   Whole Body   Thyroid      TEDE
  (hr)    (rem)       (rem)       (rem)
   1.4   1.8583E-01   8.6834E+00   9.8350E-01
```

Ref.

Appendix D3.3: NMP1-Case 1Ac.o0 (Stack Release)

##

I-131 Summary

##

Time (hr)	DW I-131 (Curies)	WW I-131 (Curies)	RB I-131 (Curies)
0.001	2.8009E+03	0.0000E+00	0.0000E+00
0.010	4.0662E+04	0.0000E+00	0.0000E+00
0.031	7.9873E+04	0.0000E+00	0.0000E+00
0.260	2.5478E+05	0.0000E+00	0.0000E+00
0.496	2.7019E+05	0.0000E+00	0.0000E+00
0.500	2.5913E+05	0.0000E+00	0.0000E+00
0.524	2.6930E+05	0.0000E+00	0.0000E+00
0.529	2.8219E+05	0.0000E+00	0.0000E+00
0.700	3.8104E+05	0.0000E+00	0.0000E+00
0.800	3.8407E+05	0.0000E+00	0.0000E+00
1.000	4.3655E+05	0.0000E+00	0.0000E+00
1.178	4.3951E+05	0.0000E+00	0.0000E+00
1.478	4.4291E+05	0.0000E+00	0.0000E+00
1.778	4.4628E+05	0.0000E+00	0.0000E+00
1.985	4.4860E+05	0.0000E+00	0.0000E+00
2.000	5.4180E+05	0.0000E+00	0.0000E+00
2.033	4.6306E+05	0.0000E+00	0.0000E+00
2.211	1.6661E+05	1.1450E+05	0.0000E+00
2.500	7.9250E+04	5.4301E+04	0.0000E+00
2.727	4.7407E+04	3.2361E+04	0.0000E+00
3.127	3.0298E+04	2.0422E+04	0.0000E+00
3.427	2.3386E+04	1.5722E+04	0.0000E+00
3.727	1.9320E+04	1.2957E+04	0.0000E+00
4.027	1.6925E+04	1.1329E+04	0.0000E+00
4.280	1.5685E+04	1.0485E+04	0.0000E+00
4.580	1.5018E+04	1.0026E+04	0.0000E+00
4.880	1.4544E+04	9.7054E+03	0.0000E+00
4.952	1.4453E+04	9.6441E+03	0.0000E+00
5.252	1.4144E+04	9.4351E+03	0.0000E+00
5.552	1.3922E+04	9.2859E+03	0.0000E+00
5.852	1.3763E+04	9.1783E+03	0.0000E+00
6.000	1.3701E+04	9.1366E+03	0.0000E+00
6.300	1.3601E+04	9.0689E+03	4.2058E+00
6.600	1.3525E+04	9.0182E+03	8.2675E+00
6.900	1.3468E+04	8.9793E+03	1.2196E+01
7.200	1.3422E+04	8.9486E+03	1.5999E+01
7.500	1.3385E+04	8.9237E+03	1.9683E+01
7.800	1.3354E+04	8.9027E+03	2.3254E+01
7.995	1.3336E+04	8.8907E+03	2.5515E+01
8.000	1.3335E+04	8.8904E+03	2.5574E+01
8.400	1.3302E+04	8.8684E+03	3.0075E+01
8.700	1.3280E+04	8.8536E+03	3.3333E+01
9.000	1.3259E+04	8.8397E+03	3.6493E+01
9.300	1.3240E+04	8.8266E+03	3.9559E+01
9.600	1.3221E+04	8.8138E+03	4.2534E+01
9.900	1.3202E+04	8.8015E+03	4.5420E+01
10.200	1.3184E+04	8.7893E+03	4.8220E+01

Project: Nine Mile Point Nuclear Station Unit: __1_ Disposition: ____

Originator/Date	Reviewer/Date	Calculation No.	Revision
J. Metcalf 12/12/06	D. Leaver 12/12/06	H21C092	00

Ref.

14.990	1.2907E+04	8.6044E+03	8.3060E+01
24.000	1.2404E+04	8.2692E+03	1.1539E+02
24.047	1.2401E+04	8.2676E+03	1.1519E+02
96.000	9.2989E+03	6.1992E+03	5.3769E+01
720.000	7.6565E+02	5.1043E+02	4.4231E+00

	SL	Environment	Pool
Time (hr)	I-131 (Curies)	I-131 (Curies)	I-131 (Curies)
0.001	8.9226E-05	0.0000E+00	0.0000E+00
0.010	2.5582E-02	0.0000E+00	0.0000E+00
0.031	1.7319E-01	0.0000E+00	0.0000E+00
0.260	3.8369E+00	0.0000E+00	0.0000E+00
0.496	9.3933E+00	0.0000E+00	0.0000E+00
0.500	9.4688E+00	0.0000E+00	0.0000E+00
0.524	9.9449E+00	0.0000E+00	0.0000E+00
0.529	1.0059E+01	0.0000E+00	0.0000E+00
0.700	1.5038E+01	0.0000E+00	0.0000E+00
0.800	1.7888E+01	0.0000E+00	0.0000E+00
1.000	2.3714E+01	0.0000E+00	0.0000E+00
1.178	2.8361E+01	0.0000E+00	0.0000E+00
1.478	3.4690E+01	0.0000E+00	0.0000E+00
1.778	3.9772E+01	0.0000E+00	0.0000E+00
1.985	4.2748E+01	0.0000E+00	0.0000E+00
2.000	4.3034E+01	0.0000E+00	0.0000E+00
2.033	4.3667E+01	0.0000E+00	0.0000E+00
2.211	4.1368E+01	0.0000E+00	0.0000E+00
2.500	3.6200E+01	0.0000E+00	0.0000E+00
2.727	3.1853E+01	0.0000E+00	0.0000E+00
3.127	2.5365E+01	0.0000E+00	0.0000E+00
3.427	2.1641E+01	0.0000E+00	0.0000E+00
3.727	1.8742E+01	0.0000E+00	0.0000E+00
4.027	1.6516E+01	0.0000E+00	0.0000E+00
4.280	1.5058E+01	0.0000E+00	0.0000E+00
4.580	1.3735E+01	0.0000E+00	0.0000E+00
4.880	1.2751E+01	0.0000E+00	0.0000E+00
4.952	1.2557E+01	0.0000E+00	0.0000E+00
5.252	1.2017E+01	0.0000E+00	0.0000E+00
5.552	1.1593E+01	0.0000E+00	0.0000E+00
5.852	1.1261E+01	0.0000E+00	0.0000E+00
6.000	1.1126E+01	0.0000E+00	0.0000E+00
6.300	1.0899E+01	5.6954E-03	0.0000E+00
6.600	1.0725E+01	2.2538E-02	0.0000E+00
6.900	1.0591E+01	5.0179E-02	0.0000E+00
7.200	1.0489E+01	8.8284E-02	0.0000E+00
7.500	1.0411E+01	1.3654E-01	0.0000E+00
7.800	1.0354E+01	1.9463E-01	0.0000E+00
7.995	1.0324E+01	2.3748E-01	0.0000E+00
8.000	1.0324E+01	2.3868E-01	0.0000E+00
8.400	1.0295E+01	3.3917E-01	0.0000E+00
8.700	1.0278E+01	4.2506E-01	0.0000E+00
9.000	1.0265E+01	5.1967E-01	0.0000E+00
9.300	1.0254E+01	6.2274E-01	0.0000E+00
9.600	1.0245E+01	7.3401E-01	0.0000E+00
9.900	1.0238E+01	8.5326E-01	0.0000E+00
10.200	1.0231E+01	9.8023E-01	0.0000E+00
14.990	1.0127E+01	3.8835E+00	0.0000E+00

Ref.

24.000	9.7818E+00	1.2179E+01	0.0000E+00
24.047	9.7800E+00	1.2228E+01	0.0000E+00
96.000	7.3364E+00	5.6896E+01	0.0000E+00
720.000	6.0407E-01	1.6827E+02	0.0000E+00

Time (hr)	Dummy I-131 (Curies)	Control Room I-131 (Curies)
0.001	5.6259E-04	0.0000E+00
0.010	1.6213E-01	0.0000E+00
0.031	1.1097E+00	0.0000E+00
0.260	2.7521E+01	0.0000E+00
0.496	7.3333E+01	0.0000E+00
0.500	7.4047E+01	0.0000E+00
0.524	7.8603E+01	0.0000E+00
0.529	7.9690E+01	0.0000E+00
0.700	1.2418E+02	0.0000E+00
0.800	1.5225E+02	0.0000E+00
1.000	2.1422E+02	0.0000E+00
1.178	2.7149E+02	0.0000E+00
1.478	3.6917E+02	0.0000E+00
1.778	4.6796E+02	0.0000E+00
1.985	5.3672E+02	0.0000E+00
2.000	5.4231E+02	0.0000E+00
2.033	5.5468E+02	0.0000E+00
2.211	6.0036E+02	0.0000E+00
2.500	6.4180E+02	0.0000E+00
2.727	6.5954E+02	0.0000E+00
3.127	6.7921E+02	0.0000E+00
3.427	6.8960E+02	0.0000E+00
3.727	6.9786E+02	0.0000E+00
4.027	7.0479E+02	0.0000E+00
4.280	7.1001E+02	0.0000E+00
4.580	7.1574E+02	0.0000E+00
4.880	7.2116E+02	0.0000E+00
4.952	7.2242E+02	0.0000E+00
5.252	7.2759E+02	0.0000E+00
5.552	7.3262E+02	0.0000E+00
5.852	7.3756E+02	0.0000E+00
6.000	7.3996E+02	0.0000E+00
6.300	7.4052E+02	9.3102E-08
6.600	7.4106E+02	3.3717E-07
6.900	7.4158E+02	6.8951E-07
7.200	7.4209E+02	1.1182E-06
7.500	7.4259E+02	1.5994E-06
7.800	7.4309E+02	2.1155E-06
7.995	7.4340E+02	2.4628E-06
8.000	7.4341E+02	2.4722E-06
8.400	7.4406E+02	2.2075E-06
8.700	7.4454E+02	2.1207E-06
9.000	7.4502E+02	2.1020E-06
9.300	7.4550E+02	2.1330E-06
9.600	7.4597E+02	2.2003E-06
9.900	7.4644E+02	2.2934E-06
10.200	7.4692E+02	2.4048E-06
14.990	7.5422E+02	4.4781E-06
24.000	7.6669E+02	6.6198E-06

Ref.

24.047	7.6666E+02	6.5766E-06
96.000	7.0263E+02	2.6367E-06
720.000	1.6271E+02	1.5690E-07

##

Cumulative Dose Summary

##

	EAB		LPZ		Control Room	
Time	Thyroid	TEDE	Thyroid	TEDE	Thyroid	TEDE
(hr)	(rem)	(rem)	(rem)	(rem)	(rem)	(rem)
0.001	0.0000E+00	0.0000E+00	0.0000E+00	0.0000E+00	0.0000E+00	0.0000E+00
0.010	0.0000E+00	0.0000E+00	0.0000E+00	0.0000E+00	0.0000E+00	0.0000E+00
0.031	0.0000E+00	0.0000E+00	0.0000E+00	0.0000E+00	0.0000E+00	0.0000E+00
0.260	0.0000E+00	0.0000E+00	0.0000E+00	0.0000E+00	0.0000E+00	0.0000E+00
0.496	0.0000E+00	0.0000E+00	0.0000E+00	0.0000E+00	0.0000E+00	0.0000E+00
0.500	0.0000E+00	0.0000E+00	0.0000E+00	0.0000E+00	0.0000E+00	0.0000E+00
0.524	0.0000E+00	0.0000E+00	0.0000E+00	0.0000E+00	0.0000E+00	0.0000E+00
0.529	0.0000E+00	0.0000E+00	0.0000E+00	0.0000E+00	0.0000E+00	0.0000E+00
0.700	0.0000E+00	0.0000E+00	0.0000E+00	0.0000E+00	0.0000E+00	0.0000E+00
0.800	0.0000E+00	0.0000E+00	0.0000E+00	0.0000E+00	0.0000E+00	0.0000E+00
1.000	0.0000E+00	0.0000E+00	0.0000E+00	0.0000E+00	0.0000E+00	0.0000E+00
1.178	0.0000E+00	0.0000E+00	0.0000E+00	0.0000E+00	0.0000E+00	0.0000E+00
1.478	0.0000E+00	0.0000E+00	0.0000E+00	0.0000E+00	0.0000E+00	0.0000E+00
1.778	0.0000E+00	0.0000E+00	0.0000E+00	0.0000E+00	0.0000E+00	0.0000E+00
1.985	0.0000E+00	0.0000E+00	0.0000E+00	0.0000E+00	0.0000E+00	0.0000E+00
2.000	0.0000E+00	0.0000E+00	0.0000E+00	0.0000E+00	0.0000E+00	0.0000E+00
2.033	0.0000E+00	0.0000E+00	0.0000E+00	0.0000E+00	0.0000E+00	0.0000E+00
2.211	0.0000E+00	0.0000E+00	0.0000E+00	0.0000E+00	0.0000E+00	0.0000E+00
2.500	0.0000E+00	0.0000E+00	0.0000E+00	0.0000E+00	0.0000E+00	0.0000E+00
2.727	0.0000E+00	0.0000E+00	0.0000E+00	0.0000E+00	0.0000E+00	0.0000E+00
3.127	0.0000E+00	0.0000E+00	0.0000E+00	0.0000E+00	0.0000E+00	0.0000E+00
3.427	0.0000E+00	0.0000E+00	0.0000E+00	0.0000E+00	0.0000E+00	0.0000E+00
3.727	0.0000E+00	0.0000E+00	0.0000E+00	0.0000E+00	0.0000E+00	0.0000E+00
4.027	0.0000E+00	0.0000E+00	0.0000E+00	0.0000E+00	0.0000E+00	0.0000E+00
4.280	0.0000E+00	0.0000E+00	0.0000E+00	0.0000E+00	0.0000E+00	0.0000E+00
4.580	0.0000E+00	0.0000E+00	0.0000E+00	0.0000E+00	0.0000E+00	0.0000E+00
4.880	0.0000E+00	0.0000E+00	0.0000E+00	0.0000E+00	0.0000E+00	0.0000E+00
4.952	0.0000E+00	0.0000E+00	0.0000E+00	0.0000E+00	0.0000E+00	0.0000E+00
5.252	0.0000E+00	0.0000E+00	0.0000E+00	0.0000E+00	0.0000E+00	0.0000E+00
5.552	0.0000E+00	0.0000E+00	0.0000E+00	0.0000E+00	0.0000E+00	0.0000E+00
5.852	0.0000E+00	0.0000E+00	0.0000E+00	0.0000E+00	0.0000E+00	0.0000E+00
6.000	0.0000E+00	0.0000E+00	0.0000E+00	0.0000E+00	0.0000E+00	0.0000E+00
6.300	0.0000E+00	0.0000E+00	3.5706E-06	1.6117E-05	4.7591E-06	8.0527E-06
6.600	0.0000E+00	0.0000E+00	1.4103E-05	6.1689E-05	3.4276E-05	6.2555E-05
6.900	0.0000E+00	0.0000E+00	3.1341E-05	1.3293E-04	1.0731E-04	2.0254E-04
7.200	0.0000E+00	0.0000E+00	5.5040E-05	2.2651E-04	2.3711E-04	4.5296E-04
7.500	0.0000E+00	0.0000E+00	8.4970E-05	3.3945E-04	4.3264E-04	8.2590E-04
7.800	0.0000E+00	0.0000E+00	1.2091E-04	4.6915E-04	6.9968E-04	1.3238E-03
7.995	0.0000E+00	0.0000E+00	1.4736E-04	5.6122E-04	9.1308E-04	1.7125E-03
8.000	0.0000E+00	0.0000E+00	1.4810E-04	5.6374E-04	9.1923E-04	1.7238E-03
8.400	0.0000E+00	0.0000E+00	1.6931E-04	7.0038E-04	1.3648E-03	2.5462E-03
8.700	0.0000E+00	0.0000E+00	1.8739E-04	8.1123E-04	1.6746E-03	3.1092E-03
9.000	0.0000E+00	0.0000E+00	2.0725E-04	9.2808E-04	1.9756E-03	3.6309E-03
9.300	0.0000E+00	0.0000E+00	2.2884E-04	1.0500E-03	2.2759E-03	4.1233E-03
9.600	0.0000E+00	0.0000E+00	2.5209E-04	1.1762E-03	2.5816E-03	4.5969E-03

Ref.

9.900	0.0000E+00	0.0000E+00	2.7695E-04	1.3060E-03	2.8972E-03	5.0597E-03
10.200	0.0000E+00	0.0000E+00	3.0335E-04	1.4388E-03	3.2257E-03	5.5169E-03
14.990	0.0000E+00	0.0000E+00	8.9715E-04	3.7229E-03	1.0771E-02	1.3293E-02
24.000	0.0000E+00	0.0000E+00	2.5288E-03	7.6049E-03	3.3019E-02	2.6496E-02
24.047	0.0000E+00	0.0000E+00	2.5337E-03	7.6122E-03	3.3097E-02	2.6528E-02
96.000	0.0000E+00	0.0000E+00	6.6789E-03	1.1956E-02	8.9817E-02	4.0882E-02
720.000	0.0000E+00	0.0000E+00	9.7699E-03	1.3972E-02	1.5246E-01	5.1098E-02

##

Worst Two-Hour Doses

Note: All of the dose locations are shown below but the worst two-hour dose is only meaningful for the EAB dose location. Please disregard the two-hour worst doses for the other dose locations

##

EAB

Time (hr)	Whole Body (rem)	Thyroid (rem)	TEDE (rem)
0.0	0.0000E+00	0.0000E+00	0.0000E+00

LPZ

Time (hr)	Whole Body (rem)	Thyroid (rem)	TEDE (rem)
11.5	9.4512E-04	2.4793E-04	9.5369E-04

Control Room

Time (hr)	Whole Body (rem)	Thyroid (rem)	TEDE (rem)
7.5	2.2603E-03	2.0471E-03	3.6131E-03

Appendix D3.4: NMP1-Case 1Ad.o0 (ESF-Temporary Bypass)

##

I-131 Summary

##

Time (hr)	DW I-131 (Curies)	WW I-131 (Curies)	RB I-131 (Curies)
0.001	0.0000E+00	0.0000E+00	0.0000E+00
0.010	0.0000E+00	0.0000E+00	0.0000E+00
0.031	0.0000E+00	0.0000E+00	0.0000E+00
0.260	0.0000E+00	0.0000E+00	0.0000E+00
0.496	0.0000E+00	0.0000E+00	0.0000E+00
0.500	0.0000E+00	0.0000E+00	0.0000E+00
0.524	0.0000E+00	0.0000E+00	0.0000E+00
0.529	0.0000E+00	0.0000E+00	0.0000E+00
0.700	0.0000E+00	0.0000E+00	0.0000E+00
0.800	0.0000E+00	0.0000E+00	0.0000E+00
1.000	0.0000E+00	0.0000E+00	0.0000E+00
1.178	0.0000E+00	0.0000E+00	0.0000E+00
1.478	0.0000E+00	0.0000E+00	0.0000E+00
1.778	0.0000E+00	0.0000E+00	0.0000E+00
1.985	0.0000E+00	0.0000E+00	0.0000E+00
2.000	0.0000E+00	0.0000E+00	0.0000E+00
2.033	0.0000E+00	0.0000E+00	0.0000E+00
2.211	0.0000E+00	0.0000E+00	0.0000E+00
2.500	0.0000E+00	0.0000E+00	0.0000E+00
2.727	0.0000E+00	0.0000E+00	0.0000E+00
3.127	0.0000E+00	0.0000E+00	0.0000E+00
3.427	0.0000E+00	0.0000E+00	0.0000E+00
3.727	0.0000E+00	0.0000E+00	0.0000E+00
4.027	0.0000E+00	0.0000E+00	0.0000E+00
4.280	0.0000E+00	0.0000E+00	0.0000E+00
4.580	0.0000E+00	0.0000E+00	0.0000E+00
4.880	0.0000E+00	0.0000E+00	0.0000E+00
4.952	0.0000E+00	0.0000E+00	0.0000E+00
5.252	0.0000E+00	0.0000E+00	0.0000E+00
5.552	0.0000E+00	0.0000E+00	0.0000E+00
5.852	0.0000E+00	0.0000E+00	0.0000E+00
6.000	0.0000E+00	0.0000E+00	0.0000E+00
6.300	0.0000E+00	0.0000E+00	8.8357E+02
6.600	0.0000E+00	0.0000E+00	1.7410E+03
6.900	0.0000E+00	0.0000E+00	2.5732E+03
7.200	0.0000E+00	0.0000E+00	3.3806E+03
7.500	0.0000E+00	0.0000E+00	4.1641E+03
7.800	0.0000E+00	0.0000E+00	4.9243E+03
7.995	0.0000E+00	0.0000E+00	5.4058E+03
8.000	0.0000E+00	0.0000E+00	5.4185E+03
8.400	0.0000E+00	0.0000E+00	6.3774E+03
8.700	0.0000E+00	0.0000E+00	7.0715E+03
9.000	0.0000E+00	0.0000E+00	7.7449E+03
9.300	0.0000E+00	0.0000E+00	8.3980E+03
9.600	0.0000E+00	0.0000E+00	9.0315E+03
9.900	0.0000E+00	0.0000E+00	9.6459E+03
10.200	0.0000E+00	0.0000E+00	1.0242E+04

Project: Nine Mile Point Nuclear Station Unit: __1_ Disposition: ____

Originator/Date	Reviewer/Date	Calculation No.	Revision
J. Metcalf 12/12/06	D. Leaver 12/12/06	H21C092	00

Ref.

14.990	0.0000E+00	0.0000E+00	1.7621E+04
24.000	0.0000E+00	0.0000E+00	2.4322E+04
24.047	0.0000E+00	0.0000E+00	2.4341E+04
96.000	0.0000E+00	0.0000E+00	2.0383E+04
720.000	0.0000E+00	0.0000E+00	6.1832E+02

	SL	Environment	Pool
Time (hr)	I-131 (Curies)	I-131 (Curies)	I-131 (Curies)
0.001	0.0000E+00	1.5863E-04	5.6820E+03
0.010	0.0000E+00	5.3469E-02	1.0432E+05
0.031	0.0000E+00	4.9067E-01	3.1599E+05
0.260	0.0000E+00	3.4605E+01	2.6520E+06
0.496	0.0000E+00	1.2639E+02	5.0648E+06
0.500	0.0000E+00	1.2828E+02	5.1025E+06
0.524	0.0000E+00	1.3648E+02	5.5034E+06
0.529	0.0000E+00	1.3844E+02	5.5951E+06
0.700	0.0000E+00	2.1735E+02	8.4975E+06
0.800	0.0000E+00	2.4664E+02	1.0198E+07
1.000	0.0000E+00	3.2080E+02	1.3579E+07
1.178	0.0000E+00	3.4301E+02	1.6584E+07
1.478	0.0000E+00	3.9049E+02	2.1644E+07
1.778	0.0000E+00	4.5052E+02	2.6690E+07
1.985	0.0000E+00	4.9925E+02	3.0165E+07
2.000	0.0000E+00	5.0306E+02	3.0420E+07
2.033	0.0000E+00	5.1145E+02	3.0414E+07
2.211	0.0000E+00	5.3176E+02	3.0384E+07
2.500	0.0000E+00	5.6481E+02	3.0335E+07
2.727	0.0000E+00	5.9068E+02	3.0296E+07
3.127	0.0000E+00	6.3624E+02	3.0228E+07
3.427	0.0000E+00	6.7035E+02	3.0178E+07
3.727	0.0000E+00	7.0439E+02	3.0127E+07
4.027	0.0000E+00	7.3838E+02	3.0076E+07
4.280	0.0000E+00	7.6708E+02	3.0034E+07
4.580	0.0000E+00	8.0096E+02	2.9983E+07
4.880	0.0000E+00	8.3478E+02	2.9933E+07
4.952	0.0000E+00	8.4284E+02	2.9921E+07
5.252	0.0000E+00	8.7659E+02	2.9871E+07
5.552	0.0000E+00	9.1029E+02	2.9820E+07
5.852	0.0000E+00	9.4393E+02	2.9770E+07
6.000	0.0000E+00	9.6051E+02	2.9746E+07
6.300	0.0000E+00	9.6051E+02	2.9696E+07
6.600	0.0000E+00	9.6051E+02	2.9646E+07
6.900	0.0000E+00	9.6051E+02	2.9596E+07
7.200	0.0000E+00	9.6051E+02	2.9546E+07
7.500	0.0000E+00	9.6051E+02	2.9497E+07
7.800	0.0000E+00	9.6051E+02	2.9447E+07
7.995	0.0000E+00	9.6051E+02	2.9415E+07
8.000	0.0000E+00	9.6051E+02	2.9414E+07
8.400	0.0000E+00	9.6051E+02	2.9348E+07
8.700	0.0000E+00	9.6051E+02	2.9299E+07
9.000	0.0000E+00	9.6051E+02	2.9250E+07
9.300	0.0000E+00	9.6051E+02	2.9201E+07
9.600	0.0000E+00	9.6051E+02	2.9152E+07
9.900	0.0000E+00	9.6051E+02	2.9103E+07
10.200	0.0000E+00	9.6051E+02	2.9054E+07
14.990	0.0000E+00	9.6051E+02	2.8285E+07

Ref.

24.000	0.0000E+00	9.6051E+02	2.6892E+07
24.047	0.0000E+00	9.6051E+02	2.6885E+07
96.000	0.0000E+00	9.6051E+02	1.7966E+07
720.000	0.0000E+00	9.6051E+02	5.4482E+05

Time (hr)	Dummy I-131 (Curies)	Control Room I-131 (Curies)
0.001	0.0000E+00	3.9910E-09
0.010	0.0000E+00	1.3412E-06
0.031	0.0000E+00	1.2228E-05
0.260	0.0000E+00	8.0364E-04
0.496	0.0000E+00	2.7354E-03
0.500	0.0000E+00	2.7733E-03
0.524	4.4641E-01	3.0887E-03
0.529	5.5329E-01	3.1639E-03
0.700	4.8500E+00	6.0950E-03
0.800	1.1464E+01	6.8426E-03
1.000	2.8206E+01	8.8169E-03
1.178	5.3380E+01	8.4016E-03
1.478	1.0718E+02	8.2548E-03
1.778	1.7517E+02	8.6520E-03
1.985	2.3032E+02	9.1708E-03
2.000	2.3463E+02	9.2155E-03
2.033	2.4412E+02	9.3128E-03
2.211	2.9714E+02	8.7392E-03
2.500	3.8333E+02	7.9869E-03
2.727	4.5077E+02	7.0277E-03
3.127	5.6936E+02	5.7640E-03
3.427	6.5802E+02	5.0842E-03
3.727	7.4643E+02	4.5714E-03
4.027	8.3460E+02	4.1842E-03
4.280	9.0896E+02	3.9317E-03
4.580	9.9668E+02	3.7006E-03
4.880	1.0842E+03	3.5255E-03
4.952	1.1050E+03	3.4904E-03
5.252	1.1921E+03	3.3658E-03
5.552	1.2791E+03	3.2707E-03
5.852	1.3658E+03	3.1980E-03
6.000	1.4084E+03	3.1686E-03
6.300	1.4075E+03	2.3842E-03
6.600	1.4079E+03	1.7941E-03
6.900	1.4094E+03	1.3500E-03
7.200	1.4120E+03	1.0158E-03
7.500	1.4158E+03	7.6435E-04
7.800	1.4206E+03	5.7514E-04
7.995	1.4243E+03	4.7816E-04
8.000	1.4244E+03	4.7581E-04
8.400	1.4334E+03	3.2564E-04
8.700	1.4412E+03	2.4503E-04
9.000	1.4500E+03	1.8438E-04
9.300	1.4598E+03	1.3874E-04
9.600	1.4704E+03	1.0439E-04
9.900	1.4819E+03	7.8552E-05
10.200	1.4942E+03	5.9107E-05
14.990	1.7843E+03	6.3021E-07
24.000	2.6190E+03	1.2299E-10

Ref.

24.047	2.6239E+03	1.1763E-10
96.000	9.1436E+03	2.7906E-40
720.000	4.5664E+03	3.3825-297

##

Cumulative Dose Summary

##

	EAB		LPZ		Control Room	
Time	Thyroid	TEDE	Thyroid	TEDE	Thyroid	TEDE
(hr)	(rem)	(rem)	(rem)	(rem)	(rem)	(rem)
0.001	0.0000E+00	0.0000E+00	1.3731E-06	4.9978E-08	5.5442E-10	1.7648E-11
0.010	0.0000E+00	0.0000E+00	4.6285E-04	1.6846E-05	3.0878E-06	9.8287E-08
0.031	0.0000E+00	0.0000E+00	4.2471E-03	1.5455E-04	7.3317E-05	2.3339E-06
0.260	0.0000E+00	0.0000E+00	2.9913E-01	1.0867E-02	3.7357E-02	1.1895E-03
0.496	0.0000E+00	0.0000E+00	1.0903E+00	3.9472E-02	2.3751E-01	7.5646E-03
0.500	0.0000E+00	0.0000E+00	1.1066E+00	4.0058E-02	2.4257E-01	7.7257E-03
0.524	8.2172E-01	2.9610E-02	1.1770E+00	4.2599E-02	2.7694E-01	8.8197E-03
0.529	1.0184E+00	3.6692E-02	1.1939E+00	4.3206E-02	2.8532E-01	9.0866E-03
0.700	8.9242E+00	3.2062E-01	1.8722E+00	6.7564E-02	6.7299E-01	2.1431E-02
0.800	1.1854E+01	4.2549E-01	2.1235E+00	7.6561E-02	9.9457E-01	3.1664E-02
1.000	1.9259E+01	6.8971E-01	2.7588E+00	9.9229E-02	1.7643E+00	5.6133E-02
1.178	2.1471E+01	7.6833E-01	2.9486E+00	1.0597E-01	2.5183E+00	8.0065E-02
1.478	2.6188E+01	9.3521E-01	3.3532E+00	1.2029E-01	3.7410E+00	1.1882E-01
1.778	3.2131E+01	1.1444E+00	3.8631E+00	1.3824E-01	4.9794E+00	1.5803E-01
1.985	3.6941E+01	1.3130E+00	4.2757E+00	1.5270E-01	5.8802E+00	1.8654E-01
2.000	3.7316E+01	1.3262E+00	4.3079E+00	1.5383E-01	5.9483E+00	1.8870E-01
2.033	3.8143E+01	1.3551E+00	4.3788E+00	1.5631E-01	6.0989E+00	1.9346E-01
2.211	4.0142E+01	1.4249E+00	4.5503E+00	1.6230E-01	6.8795E+00	2.1815E-01
2.500	4.3385E+01	1.5381E+00	4.8286E+00	1.7201E-01	8.0536E+00	2.5525E-01
2.727	4.3385E+01	1.5381E+00	5.0458E+00	1.7957E-01	8.8776E+00	2.8127E-01
3.127	4.3385E+01	1.5381E+00	5.4271E+00	1.9278E-01	1.0107E+01	3.2004E-01
3.427	4.3385E+01	1.5381E+00	5.7113E+00	2.0260E-01	1.0888E+01	3.4467E-01
3.727	4.3385E+01	1.5381E+00	5.9942E+00	2.1234E-01	1.1582E+01	3.6654E-01
4.027	4.3385E+01	1.5381E+00	6.2757E+00	2.2201E-01	1.2209E+01	3.8630E-01
4.280	4.3385E+01	1.5381E+00	6.5126E+00	2.3013E-01	1.2699E+01	4.0177E-01
4.580	4.3385E+01	1.5381E+00	6.7917E+00	2.3967E-01	1.3243E+01	4.1892E-01
4.880	4.3385E+01	1.5381E+00	7.0694E+00	2.4915E-01	1.3757E+01	4.3511E-01
4.952	4.3385E+01	1.5381E+00	7.1354E+00	2.5140E-01	1.3875E+01	4.3886E-01
5.252	4.3385E+01	1.5381E+00	7.4115E+00	2.6081E-01	1.4361E+01	4.5417E-01
5.552	4.3385E+01	1.5381E+00	7.6864E+00	2.7016E-01	1.4830E+01	4.6896E-01
5.852	4.3385E+01	1.5381E+00	7.9601E+00	2.7945E-01	1.5286E+01	4.8334E-01
6.000	4.3385E+01	1.5381E+00	8.0946E+00	2.8401E-01	1.5506E+01	4.9030E-01
6.300	4.3385E+01	1.5381E+00	8.0946E+00	2.8401E-01	1.5894E+01	5.0252E-01
6.600	4.3385E+01	1.5381E+00	8.0946E+00	2.8401E-01	1.6185E+01	5.1167E-01
6.900	4.3385E+01	1.5381E+00	8.0947E+00	2.8401E-01	1.6403E+01	5.1853E-01
7.200	4.3385E+01	1.5381E+00	8.0947E+00	2.8401E-01	1.6567E+01	5.2368E-01
7.500	4.3385E+01	1.5381E+00	8.0947E+00	2.8401E-01	1.6690E+01	5.2754E-01
7.800	4.3385E+01	1.5381E+00	8.0947E+00	2.8401E-01	1.6782E+01	5.3043E-01
7.995	4.3385E+01	1.5381E+00	8.0947E+00	2.8401E-01	1.6829E+01	5.3191E-01
8.000	4.3385E+01	1.5381E+00	8.0947E+00	2.8401E-01	1.6830E+01	5.3195E-01
8.400	4.3385E+01	1.5381E+00	8.0947E+00	2.8401E-01	1.6903E+01	5.3423E-01
8.700	4.3385E+01	1.5381E+00	8.0947E+00	2.8401E-01	1.6942E+01	5.3546E-01
9.000	4.3385E+01	1.5381E+00	8.0947E+00	2.8401E-01	1.6971E+01	5.3637E-01
9.300	4.3385E+01	1.5381E+00	8.0947E+00	2.8401E-01	1.6993E+01	5.3706E-01
9.600	4.3385E+01	1.5381E+00	8.0947E+00	2.8401E-01	1.7010E+01	5.3758E-01

Ref.

```
 9.900 4.3385E+01 1.5381E+00 8.0947E+00 2.8401E-01 1.7022E+01 5.3796E-01
10.200 4.3385E+01 1.5381E+00 8.0947E+00 2.8401E-01 1.7031E+01 5.3826E-01
14.990 4.3385E+01 1.5381E+00 8.0947E+00 2.8401E-01 1.7059E+01 5.3913E-01
24.000 4.3385E+01 1.5381E+00 8.0947E+00 2.8401E-01 1.7060E+01 5.3914E-01
24.047 4.3385E+01 1.5381E+00 8.0947E+00 2.8401E-01 1.7060E+01 5.3914E-01
96.000 4.3385E+01 1.5381E+00 8.0947E+00 2.8401E-01 1.7060E+01 5.3914E-01
720.000 4.3385E+01 1.5381E+00 8.0947E+00 2.8401E-01 1.7060E+01 5.3914E-01

##################################################################
                Worst Two-Hour Doses
  Note: All of the dose locations are shown below but the
      worst two-hour dose is only meaningful for the EAB
      dose location.  Please disregard the two-hour worst
      doses for the other dose locations
##################################################################

EAB
  Time   Whole Body   Thyroid      TEDE
  (hr)    (rem)       (rem)       (rem)
   0.5  1.7346E-01  4.3385E+01  1.5381E+00

LPZ
  Time   Whole Body   Thyroid      TEDE
  (hr)    (rem)       (rem)       (rem)
   0.1  1.8206E-02  4.3499E+00  1.5517E-01

Control Room
  Time   Whole Body   Thyroid      TEDE
  (hr)    (rem)       (rem)       (rem)
   0.7  2.1830E-03  8.1072E+00  2.5676E-01
```

Ref.

Appendix D3.5: NMP1-Case 1Ae.o0 (ESF- Stack Release)

##

I-131 Summary

##

Time (hr)	DW I-131 (Curies)	WW I-131 (Curies)	RB I-131 (Curies)
0.001	0.0000E+00	0.0000E+00	0.0000E+00
0.010	0.0000E+00	0.0000E+00	0.0000E+00
0.031	0.0000E+00	0.0000E+00	0.0000E+00
0.260	0.0000E+00	0.0000E+00	0.0000E+00
0.496	0.0000E+00	0.0000E+00	0.0000E+00
0.500	0.0000E+00	0.0000E+00	0.0000E+00
0.524	0.0000E+00	0.0000E+00	0.0000E+00
0.529	0.0000E+00	0.0000E+00	0.0000E+00
0.700	0.0000E+00	0.0000E+00	0.0000E+00
0.800	0.0000E+00	0.0000E+00	0.0000E+00
1.000	0.0000E+00	0.0000E+00	0.0000E+00
1.178	0.0000E+00	0.0000E+00	0.0000E+00
1.478	0.0000E+00	0.0000E+00	0.0000E+00
1.778	0.0000E+00	0.0000E+00	0.0000E+00
1.985	0.0000E+00	0.0000E+00	0.0000E+00
2.000	0.0000E+00	0.0000E+00	0.0000E+00
2.033	0.0000E+00	0.0000E+00	0.0000E+00
2.211	0.0000E+00	0.0000E+00	0.0000E+00
2.500	0.0000E+00	0.0000E+00	0.0000E+00
2.727	0.0000E+00	0.0000E+00	0.0000E+00
3.127	0.0000E+00	0.0000E+00	0.0000E+00
3.427	0.0000E+00	0.0000E+00	0.0000E+00
3.727	0.0000E+00	0.0000E+00	0.0000E+00
4.027	0.0000E+00	0.0000E+00	0.0000E+00
4.280	0.0000E+00	0.0000E+00	0.0000E+00
4.580	0.0000E+00	0.0000E+00	0.0000E+00
4.880	0.0000E+00	0.0000E+00	0.0000E+00
4.952	0.0000E+00	0.0000E+00	0.0000E+00
5.252	0.0000E+00	0.0000E+00	0.0000E+00
5.552	0.0000E+00	0.0000E+00	0.0000E+00
5.852	0.0000E+00	0.0000E+00	0.0000E+00
6.000	0.0000E+00	0.0000E+00	0.0000E+00
6.300	0.0000E+00	0.0000E+00	8.8357E+02
6.600	0.0000E+00	0.0000E+00	1.7410E+03
6.900	0.0000E+00	0.0000E+00	2.5732E+03
7.200	0.0000E+00	0.0000E+00	3.3806E+03
7.500	0.0000E+00	0.0000E+00	4.1641E+03
7.800	0.0000E+00	0.0000E+00	4.9243E+03
7.995	0.0000E+00	0.0000E+00	5.4058E+03
8.000	0.0000E+00	0.0000E+00	5.4185E+03
8.400	0.0000E+00	0.0000E+00	6.3774E+03
8.700	0.0000E+00	0.0000E+00	7.0715E+03
9.000	0.0000E+00	0.0000E+00	7.7449E+03
9.300	0.0000E+00	0.0000E+00	8.3980E+03
9.600	0.0000E+00	0.0000E+00	9.0315E+03
9.900	0.0000E+00	0.0000E+00	9.6459E+03
10.200	0.0000E+00	0.0000E+00	1.0242E+04

Project: Nine Mile Point Nuclear Station Unit: __1_ Disposition: ____

Originator/Date	Reviewer/Date	Calculation No.	Revision
J. Metcalf 12/12/06	D. Leaver 12/12/06	H21C092	00

Ref.

14.990	0.0000E+00	0.0000E+00	1.7621E+04
24.000	0.0000E+00	0.0000E+00	2.4322E+04
24.047	0.0000E+00	0.0000E+00	2.4341E+04
96.000	0.0000E+00	0.0000E+00	2.0383E+04
720.000	0.0000E+00	0.0000E+00	6.1832E+02

	SL	Environment	Pool
Time (hr)	I-131 (Curies)	I-131 (Curies)	I-131 (Curies)
0.001	0.0000E+00	0.0000E+00	5.6820E+03
0.010	0.0000E+00	0.0000E+00	1.0432E+05
0.031	0.0000E+00	0.0000E+00	3.1599E+05
0.260	0.0000E+00	0.0000E+00	2.6520E+06
0.496	0.0000E+00	0.0000E+00	5.0648E+06
0.500	0.0000E+00	0.0000E+00	5.1025E+06
0.524	0.0000E+00	2.3394E-01	5.5034E+06
0.529	0.0000E+00	2.8995E-01	5.5951E+06
0.700	0.0000E+00	2.5421E+00	8.4975E+06
0.800	0.0000E+00	6.0091E+00	1.0198E+07
1.000	0.0000E+00	1.4788E+01	1.3579E+07
1.178	0.0000E+00	2.7992E+01	1.6584E+07
1.478	0.0000E+00	5.6227E+01	2.1644E+07
1.778	0.0000E+00	9.1927E+01	2.6690E+07
1.985	0.0000E+00	1.2090E+02	3.0165E+07
2.000	0.0000E+00	1.2317E+02	3.0420E+07
2.033	0.0000E+00	1.2816E+02	3.0414E+07
2.211	0.0000E+00	1.5603E+02	3.0384E+07
2.500	0.0000E+00	2.0137E+02	3.0335E+07
2.727	0.0000E+00	2.3689E+02	3.0296E+07
3.127	0.0000E+00	2.9941E+02	3.0228E+07
3.427	0.0000E+00	3.4620E+02	3.0178E+07
3.727	0.0000E+00	3.9292E+02	3.0127E+07
4.027	0.0000E+00	4.3957E+02	3.0076E+07
4.280	0.0000E+00	4.7895E+02	3.0034E+07
4.580	0.0000E+00	5.2545E+02	2.9983E+07
4.880	0.0000E+00	5.7187E+02	2.9933E+07
4.952	0.0000E+00	5.8292E+02	2.9921E+07
5.252	0.0000E+00	6.2924E+02	2.9871E+07
5.552	0.0000E+00	6.7549E+02	2.9820E+07
5.852	0.0000E+00	7.2165E+02	2.9770E+07
6.000	0.0000E+00	7.4440E+02	2.9746E+07
6.300	0.0000E+00	7.4502E+02	2.9696E+07
6.600	0.0000E+00	7.4686E+02	2.9646E+07
6.900	0.0000E+00	7.4988E+02	2.9596E+07
7.200	0.0000E+00	7.5405E+02	2.9546E+07
7.500	0.0000E+00	7.5933E+02	2.9497E+07
7.800	0.0000E+00	7.6569E+02	2.9447E+07
7.995	0.0000E+00	7.7038E+02	2.9415E+07
8.000	0.0000E+00	7.7052E+02	2.9414E+07
8.400	0.0000E+00	7.8152E+02	2.9348E+07
8.700	0.0000E+00	7.9093E+02	2.9299E+07
9.000	0.0000E+00	8.0130E+02	2.9250E+07
9.300	0.0000E+00	8.1259E+02	2.9201E+07
9.600	0.0000E+00	8.2479E+02	2.9152E+07
9.900	0.0000E+00	8.3785E+02	2.9103E+07
10.200	0.0000E+00	8.5177E+02	2.9054E+07
14.990	0.0000E+00	1.1696E+03	2.8285E+07

Ref.

24.000	0.0000E+00	2.0733E+03	2.6892E+07
24.047	0.0000E+00	2.0786E+03	2.6885E+07
96.000	0.0000E+00	1.0186E+04	1.7966E+07
720.000	0.0000E+00	2.6618E+04	5.4482E+05

Time (hr)	Dummy I-131 (Curies)	Control Room I-131 (Curies)
0.001	1.5863E-04	0.0000E+00
0.010	5.3469E-02	0.0000E+00
0.031	4.9066E-01	0.0000E+00
0.260	3.4599E+01	0.0000E+00
0.496	1.2633E+02	0.0000E+00
0.500	1.2822E+02	0.0000E+00
0.524	1.3641E+02	2.8473E-06
0.529	1.3837E+02	3.5203E-06
0.700	2.1718E+02	2.8724E-05
0.800	2.4639E+02	6.6883E-05
1.000	3.2037E+02	1.5423E-04
1.178	3.4236E+02	2.8027E-04
1.478	3.8946E+02	5.1525E-04
1.778	4.4905E+02	7.7202E-04
1.985	4.9743E+02	9.5891E-04
2.000	5.0121E+02	9.7289E-04
2.033	5.0954E+02	1.0031E-03
2.211	5.2952E+02	1.1634E-03
2.500	5.6200E+02	1.3726E-03
2.727	5.8742E+02	1.5003E-03
3.127	6.3210E+02	1.6672E-03
3.427	6.6551E+02	1.7558E-03
3.727	6.9883E+02	1.8216E-03
4.027	7.3205E+02	1.8703E-03
4.280	7.6007E+02	1.9013E-03
4.580	7.9312E+02	1.9287E-03
4.880	8.2608E+02	1.9485E-03
4.952	8.3392E+02	1.9523E-03
5.252	8.6676E+02	1.9653E-03
5.552	8.9951E+02	1.9741E-03
5.852	9.3217E+02	1.9800E-03
6.000	9.4825E+02	1.9820E-03
6.300	9.4723E+02	1.4984E-03
6.600	9.4621E+02	1.1475E-03
6.900	9.4519E+02	8.9612E-04
7.200	9.4417E+02	7.1927E-04
7.500	9.4316E+02	5.9812E-04
7.800	9.4214E+02	5.1853E-04
7.995	9.4148E+02	4.8396E-04
8.000	9.4146E+02	4.8319E-04
8.400	9.4011E+02	3.6941E-04
8.700	9.3910E+02	3.1249E-04
9.000	9.3809E+02	2.7315E-04
9.300	9.3708E+02	2.4695E-04
9.600	9.3607E+02	2.3052E-04
9.900	9.3506E+02	2.2135E-04
10.200	9.3405E+02	2.1754E-04
14.990	9.1812E+02	3.3593E-04
24.000	8.8888E+02	4.9263E-04

Ref.

24.047	8.8873E+02	4.8942E-04
96.000	6.8631E+02	3.5305E-04
720.000	7.2952E+01	7.7484E-06

##

Cumulative Dose Summary

##

	EAB		LPZ		Control Room	
Time	Thyroid	TEDE	Thyroid	TEDE	Thyroid	TEDE
(hr)	(rem)	(rem)	(rem)	(rem)	(rem)	(rem)
0.001	0.0000E+00	0.0000E+00	0.0000E+00	0.0000E+00	0.0000E+00	0.0000E+00
0.010	0.0000E+00	0.0000E+00	0.0000E+00	0.0000E+00	0.0000E+00	0.0000E+00
0.031	0.0000E+00	0.0000E+00	0.0000E+00	0.0000E+00	0.0000E+00	0.0000E+00
0.260	0.0000E+00	0.0000E+00	0.0000E+00	0.0000E+00	0.0000E+00	0.0000E+00
0.496	0.0000E+00	0.0000E+00	0.0000E+00	0.0000E+00	0.0000E+00	0.0000E+00
0.500	0.0000E+00	0.0000E+00	0.0000E+00	0.0000E+00	0.0000E+00	0.0000E+00
0.524	7.3813E-03	3.3072E-04	1.5553E-04	6.9683E-06	1.6695E-05	6.0288E-07
0.529	9.1482E-03	4.1004E-04	1.9275E-04	8.6396E-06	2.5234E-05	9.0947E-07
0.700	8.0164E-02	3.5448E-03	1.6891E-03	7.4690E-05	1.3562E-03	4.7978E-05
0.800	1.8932E-01	8.4249E-03	3.9891E-03	1.7751E-04	3.7329E-03	1.3206E-04
1.000	4.6523E-01	2.1053E-02	9.8025E-03	4.4359E-04	1.4568E-02	5.1395E-04
1.178	8.7919E-01	4.0477E-02	1.8525E-02	8.5285E-04	3.3573E-02	1.1843E-03
1.478	1.7620E+00	8.2657E-02	3.7125E-02	1.7416E-03	9.2026E-02	3.2490E-03
1.778	2.8743E+00	1.3687E-01	6.0562E-02	2.8839E-03	1.8652E-01	6.5808E-03
1.985	3.7744E+00	1.8127E-01	7.9528E-02	3.8194E-03	2.7408E-01	9.6664E-03
2.000	3.8447E+00	1.8478E-01	8.1009E-02	3.8934E-03	2.8125E-01	9.9170E-03
2.033	3.9993E+00	1.9250E-01	8.4267E-02	4.0560E-03	2.9730E-01	1.0480E-02
2.211	4.8627E+00	2.3605E-01	1.0246E-01	4.9737E-03	3.9121E-01	1.3797E-02
2.500	6.2638E+00	3.0868E-01	1.3198E-01	6.5040E-03	5.7018E-01	2.0139E-02
2.727	6.2638E+00	3.0868E-01	1.5503E-01	7.7232E-03	7.2838E-01	2.5760E-02
3.127	6.2638E+00	3.0868E-01	1.9547E-01	9.8934E-03	1.0355E+00	3.6731E-02
3.427	6.2638E+00	3.0868E-01	2.2562E-01	1.1533E-02	1.2830E+00	4.5617E-02
3.727	6.2638E+00	3.0868E-01	2.5562E-01	1.3179E-02	1.5407E+00	5.4921E-02
4.027	6.2638E+00	3.0868E-01	2.8549E-01	1.4828E-02	1.8058E+00	6.4549E-02
4.280	6.2638E+00	3.0868E-01	3.1062E-01	1.6225E-02	2.0341E+00	7.2882E-02
4.580	6.2638E+00	3.0868E-01	3.4023E-01	1.7877E-02	2.3075E+00	8.2929E-02
4.880	6.2638E+00	3.0868E-01	3.6969E-01	1.9531E-02	2.5834E+00	9.3133E-02
4.952	6.2638E+00	3.0868E-01	3.7669E-01	1.9925E-02	2.6494E+00	9.5580E-02
5.252	6.2638E+00	3.0868E-01	4.0598E-01	2.1579E-02	2.9272E+00	1.0594E-01
5.552	6.2638E+00	3.0868E-01	4.3514E-01	2.3234E-02	3.2056E+00	1.1638E-01
5.852	6.2638E+00	3.0868E-01	4.6417E-01	2.4888E-02	3.4844E+00	1.2690E-01
6.000	6.2638E+00	3.0868E-01	4.7845E-01	2.5703E-02	3.6218E+00	1.3211E-01
6.300	6.2638E+00	3.0868E-01	4.7884E-01	2.5725E-02	3.8645E+00	1.4122E-01
6.600	6.2638E+00	3.0868E-01	4.7998E-01	2.5787E-02	4.0486E+00	1.4801E-01
6.900	6.2638E+00	3.0868E-01	4.8187E-01	2.5885E-02	4.1904E+00	1.5321E-01
7.200	6.2638E+00	3.0868E-01	4.8445E-01	2.6018E-02	4.3022E+00	1.5730E-01
7.500	6.2638E+00	3.0868E-01	4.8773E-01	2.6185E-02	4.3932E+00	1.6063E-01
7.800	6.2638E+00	3.0868E-01	4.9166E-01	2.6383E-02	4.4702E+00	1.6346E-01
7.995	6.2638E+00	3.0868E-01	4.9455E-01	2.6528E-02	4.5151E+00	1.6512E-01
8.000	6.2638E+00	3.0868E-01	4.9463E-01	2.6532E-02	4.5163E+00	1.6517E-01
8.400	6.2638E+00	3.0868E-01	4.9695E-01	2.6689E-02	4.5939E+00	1.6804E-01
8.700	6.2638E+00	3.0868E-01	4.9893E-01	2.6822E-02	4.6406E+00	1.6976E-01
9.000	6.2638E+00	3.0868E-01	5.0111E-01	2.6968E-02	4.6806E+00	1.7125E-01
9.300	6.2638E+00	3.0868E-01	5.0347E-01	2.7126E-02	4.7161E+00	1.7257E-01
9.600	6.2638E+00	3.0868E-01	5.0602E-01	2.7296E-02	4.7486E+00	1.7378E-01

Ref.

9.900	6.2638E+00	3.0868E-01	5.0874E-01	2.7477E-02	4.7793E+00	1.7494E-01
10.200	6.2638E+00	3.0868E-01	5.1163E-01	2.7670E-02	4.8091E+00	1.7606E-01
14.990	6.2638E+00	3.0868E-01	5.7661E-01	3.1994E-02	5.3816E+00	1.9804E-01
24.000	6.2638E+00	3.0868E-01	7.5436E-01	4.3192E-02	7.0281E+00	2.6029E-01
24.047	6.2638E+00	3.0868E-01	7.5490E-01	4.3220E-02	7.0339E+00	2.6051E-01
96.000	6.2638E+00	3.0868E-01	1.5031E+00	7.2622E-02	1.3952E+01	4.8949E-01
720.000	6.2638E+00	3.0868E-01	1.9595E+00	8.7676E-02	2.0300E+01	6.8729E-01

##

Worst Two-Hour Doses

Note: All of the dose locations are shown below but the worst two-hour dose is only meaningful for the EAB dose location. Please disregard the two-hour worst doses for the other dose locations

##

EAB

Time (hr)	Whole Body (rem)	Thyroid (rem)	TEDE (rem)
0.5	1.1196E-01	6.2638E+00	3.0868E-01

LPZ

Time (hr)	Whole Body (rem)	Thyroid (rem)	TEDE (rem)
4.0	4.9220E-03	1.9563E-01	1.1023E-02

Control Room

Time (hr)	Whole Body (rem)	Thyroid (rem)	TEDE (rem)
4.0	1.1053E-02	1.8397E+00	6.8421E-02

Project: Nine Mile Point Nuclear Station Unit: __1_ Disposition: ____

Originator/Date	Reviewer/Date	Calculation No.	Revision
J. Metcalf 12/12/06	D. Leaver 12/12/06	H21C092	00

Ref.

Appendix D4: Worst two-hour EAB Dose Calculation Spreadsheet for Case 1A

Time hour	MSIV&Perm Release (run 1Aa)	Temp Release (run 1Ab)	Stack Release (run 1Ac)	ESF Temp Release (run 1Ad)	ESF Stack Release (run 1Ae)	Total EAB TEDE rem	2-hour EAB rem	
0.1	5.42E-03	2.71E-02	0.00E+00	1.88E-02	0.00E+00	5.13E-02	8.34E+00	EAB(2.1)-EAB(0.1)
0.2	1.44E-02	9.23E-02	0.00E+00	7.53E-02	0.00E+00	1.82E-01	8.65E+00	EAB(2.2)-EAB(0.2)
0.3	2.32E-02	1.79E-01	0.00E+00	1.69E-01	0.00E+00	3.71E-01	8.84E+00	
0.4	3.25E-02	2.71E-01	0.00E+00	3.00E-01	0.00E+00	6.03E-01	8.96E+00	
0.5	4.25E-02	3.66E-01	0.00E+00	4.67E-01	0.00E+00	8.75E-01	9.02E+00	
0.6	5.96E-02	5.38E-01	0.00E+00	6.07E-01	1.55E-03	1.21E+00	8.99E+00	
0.7	8.40E-02	7.79E-01	0.00E+00	7.87E-01	3.54E-03	1.65E+00	8.82E+00	
0.8	1.12E-01	1.04E+00	0.00E+00	8.92E-01	8.41E-03	2.05E+00	8.70E+00	
0.9	1.44E-01	1.33E+00	0.00E+00	1.02E+00	1.42E-02	2.50E+00	8.51E+00	
1	1.80E-01	1.64E+00	0.00E+00	1.16E+00	2.11E-02	3.00E+00	8.27E+00	
1.1	2.19E-01	1.96E+00	0.00E+00	1.20E+00	3.14E-02	3.41E+00	8.11E+00	
1.2	2.61E-01	2.29E+00	0.00E+00	1.25E+00	4.32E-02	3.84E+00	7.92E+00	
1.3	3.05E-01	2.63E+00	0.00E+00	1.30E+00	5.62E-02	4.29E+00	7.71E+00	
1.4	3.52E-01	2.97E+00	0.00E+00	1.35E+00	7.06E-02	4.75E+00	7.48E+00	
1.5	4.02E-01	3.33E+00	0.00E+00	1.42E+00	8.62E-02	5.23E+00	7.23E+00	
1.6	4.54E-01	3.69E+00	0.00E+00	1.48E+00	1.03E-01	5.73E+00	6.95E+00	
1.7	5.09E-01	4.06E+00	0.00E+00	1.55E+00	1.22E-01	6.24E+00	6.66E+00	
1.8	5.66E-01	4.43E+00	0.00E+00	1.63E+00	1.41E-01	6.77E+00	6.35E+00	
1.9	6.26E-01	4.81E+00	0.00E+00	1.71E+00	1.62E-01	7.31E+00	6.02E+00	
2	6.88E-01	5.20E+00	0.00E+00	1.79E+00	1.85E-01	7.87E+00	5.66E+00	
2.1	7.42E-01	5.59E+00	0.00E+00	1.85E+00	2.09E-01	8.39E+00	5.35E+00	
2.2	7.86E-01	5.92E+00	0.00E+00	1.89E+00	2.33E-01	8.83E+00	5.11E+00	
2.3	8.28E-01	6.20E+00	0.00E+00	1.93E+00	2.58E-01	9.22E+00	4.92E+00	
2.4	8.68E-01	6.45E+00	0.00E+00	1.97E+00	2.83E-01	9.57E+00	4.77E+00	
2.5	9.06E-01	6.67E+00	0.00E+00	2.00E+00	3.08E-01	9.89E+00	4.63E+00	
2.6	9.43E-01	6.87E+00	0.00E+00	2.04E+00	3.34E-01	1.02E+01	4.52E+00	
2.7	9.79E-01	7.05E+00	0.00E+00	2.08E+00	3.59E-01	1.05E+01	4.43E+00	
2.8	1.01E+00	7.23E+00	0.00E+00	2.12E+00	3.85E-01	1.07E+01	4.34E+00	
2.9	1.05E+00	7.39E+00	0.00E+00	2.16E+00	4.11E-01	1.10E+01	4.27E+00	
3	1.08E+00	7.55E+00	0.00E+00	2.20E+00	4.36E-01	1.13E+01	4.19E+00	
3.1	1.11E+00	7.70E+00	0.00E+00	2.24E+00	4.62E-01	1.15E+01	4.12E+00	
3.2	1.15E+00	7.85E+00	0.00E+00	2.27E+00	4.88E-01	1.18E+01	4.05E+00	
3.3	1.18E+00	7.99E+00	0.00E+00	2.31E+00	5.14E-01	1.20E+01	3.99E+00	
3.4	1.21E+00	8.13E+00	0.00E+00	2.35E+00	5.40E-01	1.22E+01	3.93E+00	
3.5	1.24E+00	8.26E+00	0.00E+00	2.39E+00	5.66E-01	1.25E+01	3.87E+00	
3.6	1.27E+00	8.39E+00	0.00E+00	2.43E+00	5.92E-01	1.27E+01	3.82E+00	
3.7	1.30E+00	8.52E+00	0.00E+00	2.46E+00	6.18E-01	1.29E+01	3.77E+00	
3.8	1.33E+00	8.64E+00	0.00E+00	2.50E+00	6.44E-01	1.31E+01	3.72E+00	
3.9	1.36E+00	8.76E+00	0.00E+00	2.54E+00	6.70E-01	1.33E+01	3.67E+00	
4	1.38E+00	8.88E+00	0.00E+00	2.58E+00	6.96E-01	1.35E+01	3.62E+00	

Project: Nine Mile Point Nuclear Station Unit: __1_ Disposition: ____

Originator/Date	Reviewer/Date	Calculation No.	Revision
J. Metcalf 12/12/06	D. Leaver 12/12/06	H21C092	00

Ref.

4.1	1.41E+00	8.99E+00	0.00E+00	2.61E+00	7.22E-01	1.37E+01	3.44E+00
4.2	1.44E+00	9.10E+00	0.00E+00	2.65E+00	7.49E-01	1.39E+01	3.26E+00
4.3	1.47E+00	9.21E+00	0.00E+00	2.69E+00	7.75E-01	1.41E+01	3.08E+00
4.4	1.49E+00	9.31E+00	0.00E+00	2.73E+00	8.01E-01	1.43E+01	2.91E+00
4.5	1.52E+00	9.42E+00	0.00E+00	2.76E+00	8.27E-01	1.45E+01	2.74E+00
4.6	1.54E+00	9.52E+00	0.00E+00	2.80E+00	8.53E-01	1.47E+01	2.57E+00
4.7	1.57E+00	9.62E+00	0.00E+00	2.84E+00	8.79E-01	1.49E+01	2.40E+00
4.8	1.59E+00	9.72E+00	0.00E+00	2.87E+00	9.05E-01	1.51E+01	2.23E+00
4.9	1.62E+00	9.82E+00	0.00E+00	2.91E+00	9.32E-01	1.53E+01	2.07E+00
5	1.64E+00	9.91E+00	0.00E+00	2.95E+00	9.58E-01	1.55E+01	1.91E+00
5.1	1.66E+00	1.00E+01	0.00E+00	2.98E+00	9.84E-01	1.56E+01	1.75E+00
5.2	1.69E+00	1.01E+01	0.00E+00	3.02E+00	1.01E+00	1.58E+01	1.60E+00
5.3	1.71E+00	1.02E+01	0.00E+00	3.06E+00	1.04E+00	1.60E+01	1.44E+00
5.4	1.73E+00	1.03E+01	0.00E+00	3.09E+00	1.06E+00	1.62E+01	1.29E+00
5.5	1.76E+00	1.04E+01	0.00E+00	3.13E+00	1.09E+00	1.63E+01	1.14E+00
5.6	1.78E+00	1.04E+01	0.00E+00	3.17E+00	1.11E+00	1.65E+01	9.97E-01
5.7	1.80E+00	1.05E+01	0.00E+00	3.20E+00	1.14E+00	1.67E+01	8.53E-01
5.8	1.82E+00	1.06E+01	0.00E+00	3.24E+00	1.17E+00	1.68E+01	7.08E-01
5.9	1.84E+00	1.07E+01	0.00E+00	3.27E+00	1.19E+00	1.70E+01	5.68E-01
6	1.86E+00	1.08E+01	0.00E+00	3.31E+00	1.22E+00	1.72E+01	4.27E-01
6.1	1.88E+00	1.08E+01	8.77E-05	3.31E+00	1.22E+00	1.72E+01	
6.2	1.90E+00	1.08E+01	3.45E-04	3.31E+00	1.22E+00	1.72E+01	
6.3	1.92E+00	1.08E+01	7.65E-04	3.31E+00	1.22E+00	1.72E+01	
6.4	1.94E+00	1.08E+01	1.34E-03	3.31E+00	1.22E+00	1.72E+01	
6.5	1.96E+00	1.08E+01	2.06E-03	3.31E+00	1.22E+00	1.73E+01	
6.6	1.98E+00	1.08E+01	2.93E-03	3.31E+00	1.22E+00	1.73E+01	
6.7	2.00E+00	1.08E+01	3.93E-03	3.31E+00	1.22E+00	1.73E+01	
6.8	2.02E+00	1.08E+01	5.06E-03	3.31E+00	1.23E+00	1.73E+01	
6.9	2.04E+00	1.08E+01	6.31E-03	3.31E+00	1.23E+00	1.73E+01	
7	2.06E+00	1.08E+01	7.68E-03	3.31E+00	1.23E+00	1.74E+01	
7.1	2.07E+00	1.08E+01	9.16E-03	3.31E+00	1.23E+00	1.74E+01	
7.2	2.09E+00	1.08E+01	1.08E-02	3.31E+00	1.23E+00	1.74E+01	
7.3	2.11E+00	1.08E+01	1.24E-02	3.31E+00	1.24E+00	1.74E+01	
7.4	2.13E+00	1.08E+01	1.42E-02	3.31E+00	1.24E+00	1.75E+01	
7.5	2.14E+00	1.08E+01	1.61E-02	3.31E+00	1.24E+00	1.75E+01	
7.6	2.16E+00	1.08E+01	1.81E-02	3.31E+00	1.25E+00	1.75E+01	
7.7	2.18E+00	1.08E+01	2.01E-02	3.31E+00	1.25E+00	1.75E+01	
7.8	2.19E+00	1.08E+01	2.23E-02	3.31E+00	1.25E+00	1.75E+01	
7.9	2.21E+00	1.08E+01	2.45E-02	3.31E+00	1.25E+00	1.76E+01	
8	2.22E+00	1.08E+01	2.68E-02	3.31E+00	1.26E+00	1.76E+01	

Ref.

Appendix E STARDOSE Dose Analysis (129 Pages)

Check and Independent Review of the Appendix D RADTRAD AST Calculation

This appendix represents check calculation results using the Polestar STARDOSE [Ref E-1] computer dose to check RADTRAD results presented in Appendix D.

Design inputs are consistent with those presented in the main body of this calculation with the following exceptions:

- Removal lambdas for the drywell and the main steam lines were determined in Appendix C of this calculation based on STARNAUA runs described in Appendix B
- Volumetric flow rate determinations for containment leakage (including MSIV and other reactor building bypass) which can be found in Appendix B

Three cases are examined in this appendix:
Case 1A: Division Electrical Failure, with core spray and secondary containment sprays.
Case 2A: Division Electrical Failure, with no core spray and with secondary containment spray.
Case 1B: MSIV Failure, with core spray and primary containment sprays.

The three cases mentioned above were analyzed to determine the most limiting LOCA case. It was found to be Case 1A.

Seven runs were then executed to analyze the most limiting case (Case 1A) in detail. The details of the seven runs are as follows:

1. Case 1A': Determination of the most limiting 2 hour dose period (all X/Q's were held constant to determine the 2 hours with the greatest rate of dose increase).
2. Case 1A_RBEVS: A run with normal reactor building ventilation in operation to provide data regarding accumulation of activity in the reactor building. These data are then used in Appendices M and N to demonstrate that the Reactor Building Emergency Ventilation System (RBEVS) is actuated in a timely manner based on exhaust radiation.
3. Case 1A: Integrated check of the five RADTRAD runs performed in Appendix D. The output of this run also provides the basis for the reactor building shine analysis presented in Appendices F, G, and H.
4. Case 1Ax: The MSIV & Permanent Bypass component (all other release pathways were directed to a dummy volume). This run is comparable to the RADTRAD 1Aa case. The output of this run is used to determine activity levels for plume shine from turbine building releases. Plume shine is treated in Appendices I, J, and K.
5. Case 1Ay: The Temporary Bypass component (all other release pathways were directed to a dummy volume). This run is comparable to the sum of the RADTRAD 1Ab and 1Ad cases. The output of this run is used to determine activity levels for plume shine from reactor building releases other than what is released via the RBEVS and stack. Plume shine is treated in Appendices I, J, and K.

Ref.

6. Case 1Az: The Stack release component (all other release pathways were directed to a dummy volume). This run is comparable to the sum of the RADTRAD 1Ac and 1Ae cases. The output of this run is used to determine activity levels for plume shine from RBEVS releases via the stack. Plume shine is treated in Appendices I, J, and K.
7. Case 1A_filter: By setting the exhaust out of the Control Room to zero, and passing the control room inleakage through a theoretical filter that removes noble gasses, the result provides the total activity that would be left on the CR filter. The output of this run is used to determine the shine due to the CR filter in Appendix L.

Ref.

Case Diagrams

CASE 1A: Division Electrical Failure
(Pathways are numbered to correspond to those in the RADTRAD analysis in Appendix D)

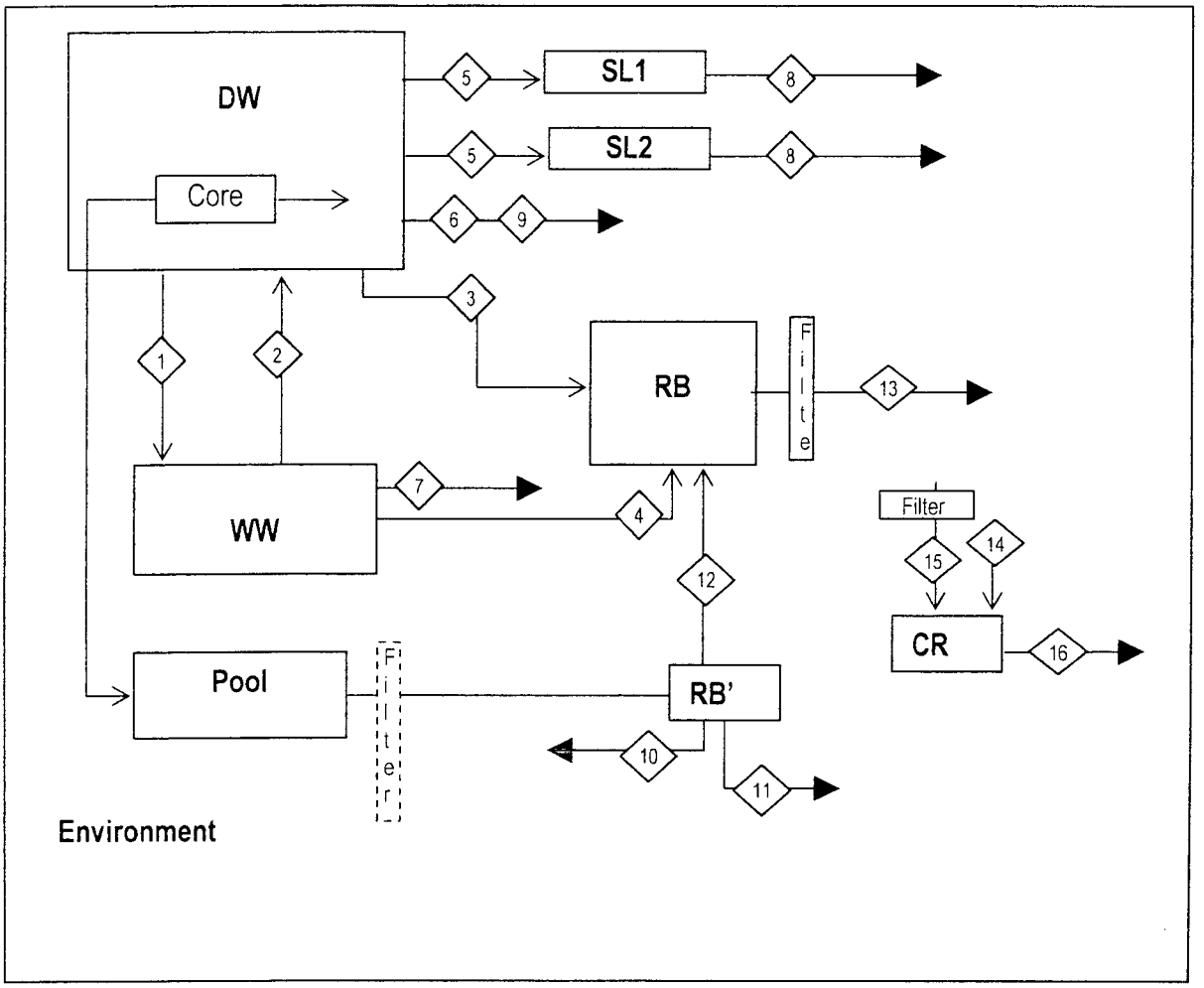

Case 2A is identical except for the following:

- There is no core spray and the operation of Containment Atmosphere Dilution (CAD) is considered. The result is a higher containment pressure than Case 1A. However, in this case, containment leakage rates are coupled to the containment pressure per the pre-AST licensing basis.
- Flow rates in junctions 3 to 9 are functions of time. These time-dependent inputs are based on time-dependent multipliers developed in Appendix B for Case 2A. The flow rates are the product of the Case 1A values prior to 24 hours and the time-dependent multipliers.
- Main steam line removal lambdas are calculated for the increase in activity in the steam lines.

Project: Nine Mile Point Nuclear Station Unit: _1__ Disposition: ____

Originator/Date	Reviewer/Date	Calculation No.	Revision
H. Pustulka 12/8/06	D. Leaver 12/12/06	H21C092	00

Ref.

CASE 1B: MSIV Failure, core spray and primary spray on, using a 40minute drawdown.

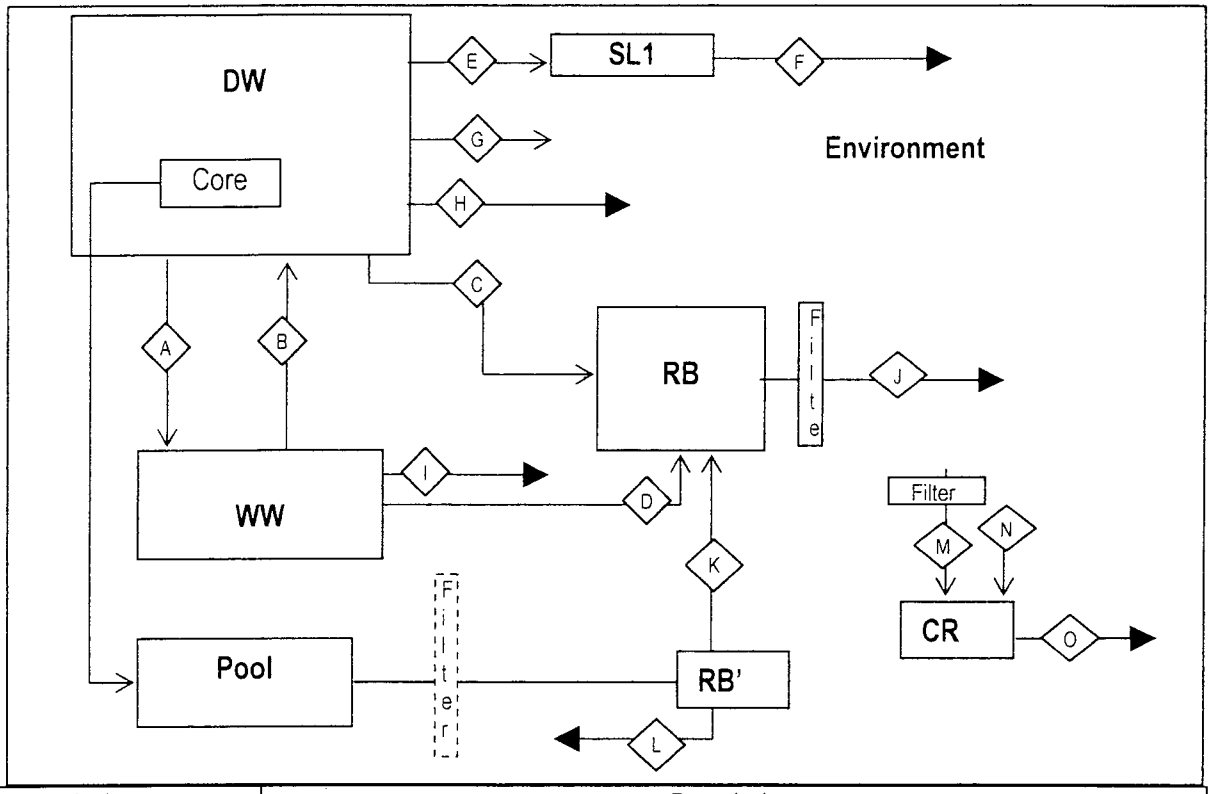

#	Pathway	Description
A	DW → WW	1.80E+05 cfm, or a flowrate of one volume per minute is used to represent uniform mixing.
B	WW → DW	
C	DW→ RB	1.875 cfm after 40minutes
D	WW→ RB	1.25 cfm after 40minutes
E	DW→ SL1	0.342 cfm
F	SL1→ Environment	0.398 cfm exhaust from the steam line
G	DW→ Environment	0.342 cfm exhaust
H	DW→ Environment	2.159 cfm bypass for the first 40 minutes, which then reduces to 0.284 cfm. (Temporary bypass is treated with the RB ground level X/Qs, Permanent bypass is treated with the TB ground level X/Q's. For this junction the X/Q's are weighted to take into consideration both releases through one path.)
I	WW→ Environment	1.25 cfm for the first 40minutes
J	RB→ Environment	Stack exhaust from the Reactor Building
K	RB'→ Environment	ESF (Stack Component) 2.67 cfm after 40 minutes
L	RB'→ Environment	ESF (Ground level component) 2.67cfm for 40 minutes.
M	Environment→ CR	Filtered inleakage 2025 cfm
N	Environment→ CR	Unfiltered inleakage 100 cfm
O	CR→ Environment	Exhaust from the CR, 2125 cfm (2025 cfm + 100 cfm)

Ref.

STARDOSE Analysis

The Design Input Summary data and the Assumptions are the same as those used in Appendix D. These are found in the main body of the calculation.

The STARDOSE LIBFILE1.TXT file is included as Appendix E1.
The LIBFILE1.TXT files have the following format (by column):

1. Radionuclide ID
2. Radionuclide group (see Design Input Summary for group assignments)
3. Parent
4. Daughter
5. Ci/MW (see Design Input Summary)
6. Decay constant, per sec (taken from Reference E-2)
7. Thyroid DCF (set equal to zero for these analyses)
8. WB DCF (rem-m^3/Ci-sec) (see Design Input Summary)
9. Not used
10. Not used
11. Skin DCF (set equal to zero for these analyses)
12. CEDE DCF (rem/Ci) (see Design Input Summary)
13. Not used
14. Not used
15. Not used
16. Not used
17. Not used
18. Not used

The 66 radionuclide inventories are the ones identified in the Design Input Summary. These 66 radionuclides include the 60 RADTRAD radionuclides minus two insignificant Cobalt nuclides plus eight additional radionuclides (mostly noble gases): Kr83m, Kr89, Xe131m, Xe133m, Xe135m, Xe137, Xe138, and Ba137m. Rb88 is included because of its importance as a decay daughter. Therefore, Rb88 has been included in Appendix E1 and in Appendix E2 the DCFs for Rb-88 have been added to those for Kr-88 even though the half-life of Rb-88 (17.8 minutes) is slightly greater than 10% of its parent Kr-88 (170.4 minutes).

Eight INPUT.DAT files are provided in Appendices E2, E4 and E6. As previously noted, the model for Case 1A (Appendices E2 and E3) is the same as the corresponding RADTRAD case documented in Appendix D except for the addition of the RB' volume and a slight difference in the worst 2 hour period. The theoretical RB' volume is used to correctly distribute activity to the environment utilizing the appropriate X/Q value. When holding all X/Q's constant, the maximum two-hour EAB dose was obtained using the 0.667 to 2.667 hour period identified in Case 1A'. This differs slightly from the 0.5

Ref.

to 2.5 time interval used in the RADTRAD calculations of Appendix D.

Results Summary and Comparison to RADTRAD Results

Table E-1: Most Limiting

	TEDE (rem)		
	Case 1A	Case 2A	Case 1B
Control Room(1)	3.79E+00	3.29E+00	2.09E+00
EAB	7.60E+00	6.45E+00	1.68E+00
LPZ	1.57E+00	1.32E+00	7.86E+00

(1) Without Shine

From the above table it can be seen that Case 1A (Electrical Division Failure with core spray) is the most limiting case.

TABLE E-2: Dose Result Summary

	RADTRAD		STARDOSE	
	Appendix D		*Appendix E*	
	Case No	Dose (rem)	Case No	Dose (rem)
CR	(1Aa)	8.55E-01	1Ax	9.56E-01
	(1Ab + 1Ad)	2.31E+00	1Ay	2.05E+00
	(1Ac + 1Ae)	7.38E-01	1Az	7.32E-01
	Shine[1]	9.10E-01	Shine[1]	9.10E-01
	TOTAL	4.81E+00	TOTAL	4.65E+00
EAB[2]	1A'	9.02E+00	1A'	7.60E+00
LPZ	(1Aa)	2.90E-01	1Ax	3.12E-01
	(1Ab + 1Ad)	1.21E+00	1Ay	1.04E+00
	(1Ac + 1Ae)	1.02E-01	1Az	2.19E-01
	TOTAL	1.60E+00	TOTAL	1.57E+00

(1) Shine calculated in Appendices G (Reactor Building), I (Plume Shine), and L (Filter Shine)
(2) Worst 2hr period determined in Case 1A' to be 0.667-2.667 hours in STARDOSE and 0.5-2.5 hours in RADTRAD.

These results show good agreement between the two computer codes. Consequently, the RADTRAD results of Appendix D are considered acceptable.

References for Appendix E (in addition to several Appendix D references)

E-1 STARDOSE Version 1.01, PSAT CI09.03, Rev. 1, "Stardose Model Report."
E-2 NUREG/CR-5106, "Manual for TACT5," Version SAIC 9/23/1987

Ref.

Appendix E1: LIBFILE1.TXT File

n_isotopes	76	n_isotope_groups		11													
Kr83m	N_Gas	NONE	NONE	3.27E+03	1.05E-04	0	5.55E-06	0	0	0	0	0	0	0	0	0	0
Kr85m	N_Gas	NONE	NONE	6.82E+03	4.30E-05	0	2.77E-02	0	0	0	0	0	0	0	0	0	0
Kr85	N_Gas	NONE	NONE	3.93E+02	2.05E-09	0	4.40E-04	0	0	0	0	0	0	0	0	0	0
Kr87	N_Gas	NONE	NONE	1.30E+04	1.51E-04	0	1.52E-01	0	0	0	0	0	0	0	0	0	0
Kr88	N_Gas	NONE	NONE	1.83E+04	6.78E-05	0	5.01E-01	0	0	0	8.36E+01	0	0	0	0	0	0
Kr89	N_Gas	NONE	NONE	2.22E+04	3.63E-03	0	3.23E-01	0	0	0	0	0	0	0	0	0	0
Xe131m	N_Gas	NONE	NONE	3.04E+02	6.74E-07	0	1.44E-03	0	0	0	0	0	0	0	0	0	0
Xe133m	N_Gas	NONE	NONE	1.63E+03	3.67E-06	0	5.07E-03	0	0	0	0	0	0	0	0	0	0
Xe133	N_Gas	I133Part	NONE	5.27E+04	1.53E-06	0	5.77E-03	0	0	0	0	0	0	0	0	0	0
Xe135m	N_Gas	NONE	NONE	1.09E+04	7.56E-04	0	7.55E-02	0	0	0	0	0	0	0	0	0	0
Xe135	N_Gas	I135Part	NONE	1.91E+04	2.12E-05	0	4.40E-02	0	0	0	0	0	0	0	0	0	0
Xe137	N_Gas	NONE	NONE	4.80E+04	2.96E-03	0	3.03E-02	0	0	0	0	0	0	0	0	0	0
Xe138	N_Gas	NONE	NONE	4.50E+04	6.80E-04	0	2.13E-01	0	0	0	0	0	0	0	0	0	0
I131Org	Org_I	NONE	NONE	2.71E+04	9.98E-07	0	6.73E-02	0	0	0	3.29E+04	0	0	0	0	0	0
I132Org	Org_I	NONE	NONE	3.92E+04	8.37E-05	0	4.14E-01	0	0	0	3.81E+02	0	0	0	0	0	0
I133Org	Org_I	NONE	NONE	5.51E+04	9.26E-06	0	1.09E-01	0	0	0	5.85E+03	0	0	0	0	0	0
I134Org	Org_I	NONE	NONE	6.03E+04	2.20E-04	0	4.81E-01	0	0	0	1.31E+02	0	0	0	0	0	0
I135Org	Org_I	NONE	NONE	5.16E+04	2.91E-05	0	3.07E-01	0	0	0	1.23E+03	0	0	0	0	0	0
I131Elem	Elm_I	Te131m	NONE	2.71E+04	9.98E-07	0	6.73E-02	0	0	0	3.29E+04	0	0	0	0	0	0
I132Elem	Elm_I	Te132	NONE	3.92E+04	8.37E-05	0	4.14E-01	0	0	0	3.81E+02	0	0	0	0	0	0
I133Elem	Elm_I	NONE	NONE	5.51E+04	9.26E-06	0	1.09E-01	0	0	0	5.85E+03	0	0	0	0	0	0
I134Elem	Elm_I	NONE	NONE	6.03E+04	2.20E-04	0	4.81E-01	0	0	0	1.31E+02	0	0	0	0	0	0
I135Elem	Elm_I	NONE	NONE	5.16E+04	2.91E-05	0	3.07E-01	0	0	0	1.23E+03	0	0	0	0	0	0
I131Part	Prt_I	NONE	NONE	2.71E+04	9.98E-07	0	6.73E-02	0	0	0	3.29E+04	0	0	0	0	0	0
I132Part	Prt_I	NONE	NONE	3.92E+04	8.37E-05	0	4.14E-01	0	0	0	3.81E+02	0	0	0	0	0	0
I133Part	Prt_I	NONE	Xe133	5.51E+04	9.26E-06	0	1.09E-01	0	0	0	5.85E+03	0	0	0	0	0	0
I134Part	Prt_I	NONE	NONE	6.03E+04	2.20E-04	0	4.81E-01	0	0	0	1.31E+02	0	0	0	0	0	0
I135Part	Prt_I	NONE	Xe135	5.16E+04	2.91E-05	0	3.07E-01	0	0	0	1.23E+03	0	0	0	0	0	0
Rb86	CsGrp	NONE	NONE	7.29E+01	4.30E-07	0	1.78E-02	0	0	0	6.62E+03	0	0	0	0	0	0
Cs134	CsGrp	NONE	NONE	7.29E+03	1.07E-08	0	2.80E-01	0	0	0	4.63E+04	0	0	0	0	0	0
Cs136	CsGrp	NONE	NONE	2.28E+03	6.12E-07	0	3.92E-01	0	0	0	7.33E+03	0	0	0	0	0	0
Cs137	CsGrp	NONE	Ba137m	4.35E+03	7.32E-10	0	1.01E-01	0	0	0	3.19E+04	0	0	0	0	0	0
Sb127	TeGrp	NONE	Te127	3.01E+03	2.08E-06	0	1.23E-01	0	0	0	6.03E+03	0	0	0	0	0	0
Sb129	TeGrp	NONE	Te129	8.91E+03	4.46E-05	0	2.64E-01	0	0	0	6.44E+02	0	0	0	0	0	0
Te127m	TeGrp	NONE	NONE	4.05E+02	7.36E-08	0	5.44E-04	0	0	0	2.15E+04	0	0	0	0	0	0
Te127	TeGrp	Sb127	NONE	3.00E+03	2.06E-05	0	8.95E-04	0	0	0	3.18E+02	0	0	0	0	0	0
Te129m	TeGrp	NONE	NONE	1.30E+03	2.39E-07	0	1.23E-02	0	0	0	2.40E+04	0	0	0	0	0	0
Te129	TeGrp	Sb129	NONE	8.76E+03	1.66E-04	0	1.02E-02	0	0	0	7.73E+01	0	0	0	0	0	0
Te131m	TeGrp	NONE	I131Elem	3.97E+03	6.42E-06	0	2.76E-01	0	0	0	6.50E+03	0	0	0	0	0	0
Te132	TeGrp	NONE	I132Elem	3.85E+04	2.46E-06	0	3.81E-02	0	0	0	9.44E+03	0	0	0	0	0	0

Ref.

Ba137m	BaGrp	Cs137	NONE	4.12E+03	4.53E-03	0	1.07E-01	0	0	0	0.00E+00	0	0	0	0	0	0
Ba139	BaGrp	NONE	NONE	4.89E+04	1.40E-04	0	8.03E-03	0	0	0	1.72E+02	0	0	0	0	0	0
Ba140	BaGrp	NONE	La140	4.71E+04	6.30E-07	0	3.17E-02	0	0	0	3.74E+03	0	0	0	0	0	0
Mo99	NMtls	NONE	Tc99m	5.13E+04	2.92E-06	0	2.69E-02	0	0	0	3.96E+03	0	0	0	0	0	0
Tc99m	NMtls	Mo99	NONE	4.49E+04	3.20E-05	0	2.18E-02	0	0	0	3.26E+01	0	0	0	0	0	0
Ru103	NMtls	NONE	NONE	4.29E+04	2.04E-07	0	8.33E-02	0	0	0	8.96E+03	0	0	0	0	0	0
Ru105	NMtls	NONE	Rh105	3.01E+04	4.34E-05	0	1.41E-01	0	0	0	4.55E+02	0	0	0	0	0	0
Ru106	NMtls	NONE	NONE	1.76E+04	2.18E-08	0	3.85E-02	0	0	0	4.77E+05	0	0	0	0	0	0
Rh105	NMtls	Ru105	NONE	2.84E+04	5.45E-06	0	1.38E-02	0	0	0	9.55E+02	0	0	0	0	0	0
Y90	LaGrp	Sr90	NONE	3.24E+03	3.01E-06	0	7.03E-04	0	0	0	8.44E+03	0	0	0	0	0	0
Y91	LaGrp	Sr91	NONE	3.18E+04	1.37E-07	0	9.62E-04	0	0	0	4.88E+04	0	0	0	0	0	0
Y92	LaGrp	Sr92	NONE	3.40E+04	5.44E-05	0	4.81E-02	0	0	0	7.81E+02	0	0	0	0	0	0
Y93	LaGrp	NONE	NONE	3.96E+04	1.91E-05	0	1.78E-02	0	0	0	2.15E+03	0	0	0	0	0	0
Zr95	LaGrp	NONE	Nb95	4.46E+04	1.25E-07	0	1.33E-01	0	0	0	2.36E+04	0	0	0	0	0	0
Zr97	LaGrp	NONE	NONE	4.51E+04	1.14E-05	0	1.64E-01	0	0	0	4.33E+03	0	0	0	0	0	0
Nb95	LaGrp	Zr95	NONE	4.48E+04	2.28E-07	0	1.38E-01	0	0	0	5.81E+03	0	0	0	0	0	0
La140	LaGrp	Ba140	NONE	5.12E+04	4.78E-06	0	4.33E-01	0	0	0	4.85E+03	0	0	0	0	0	0
La141	LaGrp	NONE	Ce141	4.45E+04	4.90E-05	0	8.84E-03	0	0	0	5.81E+02	0	0	0	0	0	0
La142	LaGrp	NONE	NONE	4.29E+04	1.25E-04	0	5.33E-01	0	0	0	2.53E+02	0	0	0	0	0	0
Pr143	LaGrp	Ce143	NONE	3.97E+04	5.92E-07	0	7.77E-05	0	0	0	8.10E+03	0	0	0	0	0	0
Nd147	LaGrp	NONE	NONE	1.80E+04	7.31E-07	0	2.29E-02	0	0	0	6.85E+03	0	0	0	0	0	0
Am241	LaGrp	NONE	NONE	7.48E+00	5.08E-11	0	3.03E-03	0	0	0	4.44E+08	0	0	0	0	0	0
Cm242	LaGrp	NONE	NONE	1.85E+03	4.93E-08	0	2.11E-05	0	0	0	1.73E+07	0	0	0	0	0	0
Cm244	LaGrp	NONE	NONE	1.23E+02	1.21E-09	0	1.82E-05	0	0	0	2.48E+08	0	0	0	0	0	0
Ce141	CeGrp	La141	NONE	4.47E+04	2.47E-07	0	1.27E-02	0	0	0	8.95E+03	0	0	0	0	0	0
Ce143	CeGrp	NONE	Pr143	4.11E+04	5.83E-06	0	4.77E-02	0	0	0	3.39E+03	0	0	0	0	0	0
Ce144	CeGrp	NONE	NONE	3.70E+04	2.82E-08	0	1.03E-02	0	0	0	3.74E+05	0	0	0	0	0	0
Np239	CeGrp	NONE	NONE	5.78E+05	3.41E-06	0	2.85E-02	0	0	0	2.51E+03	0	0	0	0	0	0
Pu238	CeGrp	NONE	NONE	1.45E+02	2.50E-10	0	1.81E-05	0	0	0	2.88E+08	0	0	0	0	0	0
Pu239	CeGrp	NONE	NONE	1.34E+01	9.13E-13	0	1.57E-05	0	0	0	3.08E+08	0	0	0	0	0	0
Pu240	CeGrp	NONE	NONE	1.89E+01	3.36E-12	0	1.76E-05	0	0	0	3.08E+08	0	0	0	0	0	0
Pu241	CeGrp	NONE	NONE	5.49E+03	1.53E-09	0	2.68E-07	0	0	0	4.96E+06	0	0	0	0	0	0
Sr89	SrGrp	NONE	NONE	2.45E+04	1.59E-07	0	2.86E-04	0	0	0	6.51E+03	0	0	0	0	0	0
Sr90	SrGrp	NONE	Y90	3.14E+03	7.54E-10	0	2.79E-05	0	0	0	2.39E+05	0	0	0	0	0	0
Sr91	SrGrp	NONE	Y91	3.10E+04	2.03E-05	0	1.82E-01	0	0	0	9.32E+03	0	0	0	0	0	0
Sr92	SrGrp	NONE	Y92	3.38E+04	7.10E-05	0	2.51E-01	0	0	0	6.29E+02	0	0	0	0	0	0

Ref.

Appendix E2: INPUT.DAT Files for Case 1A (LIMITING CASE: Core Spray Division Electrical Failure)

Appendix E2.1: INPUT.DAT File Case 1A'.(Worst 2 hr Determination)

```
edit_time
0 0.417 0.667 0.917 1.167 1.417 1.667 1.917 2.033 2.167 2.417 2.667 2.917 3.167 3.667 4.167 6 8.033
end_edit_time

participating_isotopes
Kr83m  Kr85m  Kr85  Kr87  Kr88  Kr89
Xe131m Xe133m Xe133 Xe135m Xe135 Xe137 Xe138
I131Org I131Elem    I131Part
I132Org I132Elem    I132Part
I133Org I133Elem    I133Part
I134Org I134Elem    I134Part
I135Org I135Elem    I135Part
Rb86  Cs134  Cs136  Cs137
Sb127  Sb129  Te127m Te127  Te129m Te129  Te131m Te132
Ba137m Ba139  Ba140
Mo99  Tc99m  Ru103  Ru105  Ru106  Rh105
Y90  Y91  Y92  Y93  Zr95  Zr97  Nb95
La140  La141  La142  Pr143  Nd147  Am241  Cm242  Cm244
Ce141  Ce143  Ce144  Np239  Pu238  Pu239  Pu240  Pu241
Sr89  Sr90  Sr91  Sr92
end_participating_isotopes

core
thermal_power                    1887
elemental_iodine_frac            0.0485
organic_iodine_frac        0.0015
particulate_iodine_frac          0.95
release_frac
to_control_volume DW
Time N_Gas I_Grp CsGrp TeGrp BaGrp NMtls CeGrp LaGrp SrGrp
0.033    0       0       0       0       0       0       0       0       0
0.533    0.1     0.1     0.1     0       0       0       0       0       0
2.033    0.633   0.167   0.133   0.033   0.0133  0.00167 0.00033 0.00013 0.0133
720      0       0       0       0       0       0       0       0       0
end_to_control_volume
to_control_volume SP
Time N_Gas I_Grp CsGrp TeGrp BaGrp NMtls CeGrp LaGrp SrGrp
0.033    0       0       0       0       0       0       0       0       0
0.533    0       0.2     0       0       0       0       0       0       0
2.033    0       0.334   0       0       0       0       0       0       0
720      0       0       0       0       0       0       0       0       0
end_to_control_volume
end_release_frac
end_core

control_volume
obj_type                         OBJ_CV
name                             DW
air_volume                       1.8e+005
```

Ref.

```
water_volume                    0
surface_area                    1
has_recirc_filter               false
removal_rate_to_surface
Time      NobleGas Elemlodine          Orglodine Partlodine Solubles  Insolubles
0.0642    0.0000   20.000   0.000     52.895    52.895     52.895
0.5297    0.0000   19.125   0.000     19.125    19.125     19.125
0.5569    0.0000   20.000   0.000     31.616    31.616     31.616
0.8337    0.0000   20.000   0.000     22.682    22.682     22.682
2.0181    0.0000   19.849   0.000     19.849    19.849     19.849
2.7602    0.0000   4.936    0.000     4.936     4.936      4.936
4.3139    0.0000   2.975    0.000     2.975     2.975      2.975
15.0234   0.0000   2.010    0.000     2.010     2.010      2.010
720.0000  0.0000   0.000    0.000     0.000     0.000      0.000
end_removal_rate_to_surface
frac_4_daughter_resusp_from_surface
Time      NobleGas Elemlodine          Orglodine Partlodine Solubles  Insolubles
720       1        0       0           0         0         0
end_frac_4_daughter_resusp_from_surface
end_control_volume

control_volume
obj_type                        OBJ_CV
name                            WW
air_volume                      1.2e+005
water_volume                    7.97e+004
surface_area                    0
has_recirc_filter               false
removal_rate_to_waterpool
Time      NobleGas Elemlodine          Orglodine Partlodine Solubles  Insolubles
720       0        0       0           0         0         0
end_removal_rate_to_waterpool
frac_4_daughter_resusp_from_water
Time      NobleGas Elemlodine          Orglodine Partlodine Solubles  Insolubles
720       0        0       0           0         0         0
end_frac_4_daughter_resusp_from_water
decontamination_factor
Time      NobleGas Elemlodine          Orglodine Partlodine Solubles  Insolubles
720       1        1       1           1         1         1
end_decontamination_factor
end_control_volume

control_volume
obj_type                        OBJ_CV
name                            SL1
air_volume                      82.4
water_volume                    0
surface_area                    0
has_recirc_filter               false
removal_rate_to_surface
Time      NobleGas Elemlodine          Orglodine Partlodine Solubles  Insolubles
0.0435    0.0000   0.000    0.000     1.354     1.354      1.354
0.2929    0.0000   0.000    0.000     1.246     1.246      1.246
0.5623    0.0000   0.000    0.000     0.860     0.860      0.860
1.2111    0.0000   0.000    0.000     0.752     0.752      0.752
2.2441    0.0000   0.000    0.000     0.777     0.777      0.777
```

Ref.

```
4.9854    0.0000    0.000    0.000    0.691    0.691    0.691
8.0281    0.0000    0.000    0.000    0.498    0.498    0.498
24.0808   0.0000    0.000    0.000    0.317    0.317    0.317
720       0.0000    0.000    0.000    0.000    0.000    0.000
end_removal_rate_to_surface
frac_4_daughter_resusp_from_surface
Time      NobleGas  Elemlodine         Orglodine  Partlodine  Solubles   Insolubles
720       1         0        0         0          0           0
end_frac_4_daughter_resusp_from_surface
end_control_volume

control_volume
obj_type                                OBJ_CV
name                                    SL2
air_volume                              82.4
water_volume                            0
surface_area                            0
has_recirc_filter                       false
removal_rate_to_surface
Time      NobleGas  Elemlodine         Orglodine  Partlodine  Solubles   Insolubles
0.0435    0.0000    0.000    0.000    1.354      1.354       1.354
0.2929    0.0000    0.000    0.000    1.246      1.246       1.246
0.5623    0.0000    0.000    0.000    0.860      0.860       0.860
1.2111    0.0000    0.000    0.000    0.752      0.752       0.752
2.2441    0.0000    0.000    0.000    0.777      0.777       0.777
4.9854    0.0000    0.000    0.000    0.691      0.691       0.691
8.0281    0.0000    0.000    0.000    0.498      0.498       0.498
24.0808   0.0000    0.000    0.000    0.317      0.317       0.317
720       0.0000    0.000    0.000    0.000      0.000       0.000
end_removal_rate_to_surface
frac_4_daughter_resusp_from_surface
Time      NobleGas  Elemlodine         Orglodine  Partlodine  Solubles   Insolubles
720       1         0        0         0          0           0
end_frac_4_daughter_resusp_from_surface
end_control_volume

control_volume
obj_type                                OBJ_CV
name                                    RB
air_volume                              1.06e+006
water_volume                            0
surface_area                            0
has_recirc_filter                       false
end_control_volume

control_volume
obj_type                                OBJ_CV
name                                    RB'
air_volume                              100
water_volume                            0
surface_area                            0
has_recirc_filter                       false
end_control_volume

control_volume
obj_type                                OBJ_CV
```

Ref.

```
name                                SP
air_volume                          7.97e+004
water_volume                        0
surface_area                        0
has_recirc_filter                   false
end_control_volume

control_volume
obj_type                            OBJ_CR
name                                Control_Room
air_volume                          1.35e+005
water_volume                        0
surface_area                        0
has_recirc_filter                   false
breathing_rate
Time      (hr)      Value     (cms)
720                 0.00035
end_breathing_rate
occupancy_factor
Time      (hr)      Value     (frac)
24                  1
96                  0.6
720                 0.4
end_occupancy_factor
end_control_volume


junction
junction_type                       AIR_JUNCTION
downstream_location         AIR_SPACE
upstream                            CORE
downstream                          DW
has_filter                          false
flow_rate
Time      (hr)      Value     (cfm)
720                 1
end_flow_rate
end_junction

junction
junction_type                       AIR_JUNCTION
downstream_location         AIR_SPACE
upstream                            CORE
downstream                          SP
has_filter                          false
flow_rate
Time      (hr)      Value     (cfm)
720                 1
end_flow_rate
end_junction

junction
junction_type                       AIR_JUNCTION
downstream_location         WATER_POOL
upstream                            DW
downstream                          WW
```

Ref.

```
has_filter                          false
flow_rate
Time      (hr)      Value     (cfm)
2.033               0
720                 1.8e5
end_flow_rate
end_junction

junction
junction_type                       AIR_JUNCTION
downstream_location         AIR_SPACE
upstream                            WW
downstream                          DW
has_filter                          false
flow_rate
Time      (hr)      Value     (cfm)
2.033               0
720                 1.8e5
end_flow_rate
end_junction

junction
junction_type                       AIR_JUNCTION
downstream_location         AIR_SPACE
upstream                            DW
downstream                          SL1
has_filter                          true
flow_rate
Time      (hr)      Value     (cfm)
24                  0.342
720                 0.171
end_flow_rate
filter_efficiency
Time      NobleGas  Elemiodine        Orgiodine Partiodine Solubles  Insolubles
720       0         0.5       0       0.5       0.5        0.5
end_filter_efficiency
frac_4_daughter_resusp
Time      NobleGas  Elemiodine        Orgiodine Partiodine Solubles  Insolubles
720       1         0         0       0         0          0
end_frac_4_daughter_resusp
end_junction

junction
junction_type                       AIR_JUNCTION
downstream_location         AIR_SPACE
upstream                            SL1
downstream                          environment
has_filter                          false
flow_rate
Time      (hr)      Value     (cfm)
24                  0.398
720                 0.199
end_flow_rate
X_over_Q_4_ctrl_room
Time      (hr)      Value     (s/m*3)
0.667               5.85e-4
```

Ref.

```
2.667           1.03e-3
8.033           5.85e-4
24              2.07e-4
96              1.75e-4
720             1.52e-4
end_X_over_Q_4_ctrl_room
X_over_Q_4_site_boundary
Time    (hr)    Value   (s/m*3)
8.033           1.90e-4
720             0
end_X_over_Q_4_site_boundary
X_over_Q_4_low_population_zone
Time    (hr)    Value   (s/m*3)
8.033           1.63e-5
24              1.10e-5
96              4.67e-6
720             1.37e-6
end_X_over_Q_4_low_population_zone
end_junction

junction
junction_type                   AIR_JUNCTION
downstream_location     AIR_SPACE
upstream                        DW
downstream                      SL2
has_filter                      true
flow_rate
Time    (hr)    Value   (cfm)
24              0.342
720             0.171
end_flow_rate
filter_efficiency
Time    NobleGas Elemlodine     Orglodine Partlodine Solubles   Insolubles
720     0       0.5     0       0.5     0.5     0.5
end_filter_efficiency
frac_4_daughter_resusp
Time    NobleGas Elemlodine     Orglodine Partlodine Solubles   Insolubles
720     1       0       0       0       0       0
end_frac_4_daughter_resusp
end_junction

junction
junction_type                   AIR_JUNCTION
downstream_location     AIR_SPACE
upstream                        SL2
downstream                      environment
has_filter                      false
flow_rate
Time    (hr)    Value   (cfm)
24              0.398
720             0.199
end_flow_rate
X_over_Q_4_ctrl_room
Time    (hr)    Value   (s/m*3)
0.667           5.85e-4
2.667           1.03e-3
```

Ref.

```
8.033           5.85e-4
24              2.07e-4
96              1.75e-4
720             1.52e-4
end_X_over_Q_4_ctrl_room
X_over_Q_4_site_boundary
Time    (hr)    Value   (s/m*3)
8.033           1.90e-4
720             0
end_X_over_Q_4_site_boundary
X_over_Q_4_low_population_zone
Time    (hr)    Value   (s/m*3)
8.033           1.63e-5
24              1.10e-5
96              4.67e-6
720             1.37e-6
end_X_over_Q_4_low_population_zone
end_junction

junction
junction_type                   AIR_JUNCTION
downstream_location     AIR_SPACE
upstream                        DW
downstream                      environment
has_filter                      true
flow_rate
Time    (hr)    Value   (cfm)
6               2.159
24              0.284
720             0.142
end_flow_rate
filter_efficiency
Time    NobleGas Elemlodine     Orglodine Partlodine Solubles   Insolubles
6       0       0.066   0       0.066     0.066      0.066
720     0       0.5     0       0.5       0.5        0.5
end_filter_efficiency
frac_4_daughter_resusp
Time    NobleGas Elemlodine     Orglodine Partlodine Solubles   Insolubles
720     1       0       0       0         0          0
end_frac_4_daughter_resusp
X_over_Q_4_ctrl_room
Time    (hr)    Value   (s/m*3)
0.667           3.04e-4
2.667           5.54e-4
6               3.04e-4
8.033           5.85e-4
24              2.07e-4
96              1.75e-4
720             1.52e-4
end_X_over_Q_4_ctrl_room
X_over_Q_4_site_boundary
Time    (hr)    Value   (s/m*3)
8.033           1.90e-4
720             0
end_X_over_Q_4_site_boundary
X_over_Q_4_low_population_zone
```

Ref.

```
Time      (hr)      Value     (s/m*3)
8.033               1.63e-5
24                  1.10e-5
96                  4.67e-6
720                 1.37e-6
end_X_over_Q_4_low_population_zone
end_junction

junction
junction_type                 AIR_JUNCTION
downstream_location           AIR_SPACE
upstream                      WW
downstream                    environment
has_filter                    false
flow_rate
Time      (hr)      Value     (cfm)
6                   1.25
720                 0.0
end_flow_rate
X_over_Q_4_ctrl_room
Time      (hr)      Value     (s/m*3)
0.667               2.61e-4
2.667               4.82e-4
8.033               2.61e-4
24                  9.25e-5
96                  6.7e-5
720                 4.93e-5
end_X_over_Q_4_ctrl_room
X_over_Q_4_site_boundary
Time      (hr)      Value     (s/m*3)
8.033               1.90e-4
720                 0
end_X_over_Q_4_site_boundary
X_over_Q_4_low_population_zone
Time      (hr)      Value     (s/m*3)
8.033               1.63e-5
24                  1.10e-5
96                  4.67e-6
720                 1.37e-6
end_X_over_Q_4_low_population_zone
end_junction

junction
junction_type                 AIR_JUNCTION
downstream_location           AIR_SPACE
upstream                      SP
downstream                    RB'
has_filter                    true
flow_rate
Time      (hr)      Value     (cfm)
6                   2.67
720                 0
end_flow_rate
filter_efficiency
Time      NobleGas  Elemiodine          Orgiodine  Partiodine  Solubles   Insolubles
720       0.5       0.0       0.0       1.0        0           0
```

Ref.

```
end_filter_efficiency
end_junction

junction
junction_type                    AIR_JUNCTION
downstream_location              AIR_SPACE
upstream                         RB'
downstream                       environment
has_filter                       false
flow_rate
Time      (hr)      Value     (cfm)
0.5                 1481
0.7                 918
1                   792
2.0333              474
4.1667              252
720                 0
end_flow_rate
X_over_Q_4_ctrl_room
Time      (hr)      Value     (s/m*3)
0.667               2.61e-4
2.667               4.82e-4
8                   2.61e-4
24                  9.25e-5
96                  6.7e-5
720                 4.93e-5
end_X_over_Q_4_ctrl_room
X_over_Q_4_site_boundary
Time      (hr)      Value     (s/m*3)
8.033               1.90e-4
720                 0
end_X_over_Q_4_site_boundary
X_over_Q_4_low_population_zone
Time      (hr)      Value     (s/m*3)
8.033               1.63e-5
24                  1.10e-5
96                  4.67e-6
720                 1.37e-6
end_X_over_Q_4_low_population_zone
end_junction

junction
junction_type                    AIR_JUNCTION
downstream_location              AIR_SPACE
upstream                         RB'
downstream                       environment
has_filter                       true
flow_rate
Time      (hr)      Value     (cfm)
0.5                 0
0.7                 495
1                   1761
2.0333              5253
6                   6710
720                 0
end_flow_rate
```

Project: Nine Mile Point Nuclear Station Unit: __1_ Disposition: ____

Originator/Date	Reviewer/Date	Calculation No.	Revision
H. Pustulka 12/12/06	D. Leaver 12/12/06	H21C092	00

Ref.

```
filter_efficiency
Time      NobleGas  Elemiodine        Orgiodine  Partiodine  Solubles  Insolubles
720       0         0.95      0.9     0.95       0.95        0.95
end_filter_efficiency
frac_4_daughter_resusp
Time      NobleGas  Elemiodine        Orgiodine  Partiodine  Solubles  Insolubles
720       1         1         0       0          0           0
end_frac_4_daughter_resusp
X_over_Q_4_ctrl_room
Time      (hr)      Value     (s/m*3)
0.667               1.26E-4
2.667               2.27E-4
8.033               1.26E-4
24                  4.30E-5
96                  3.58E-5
720                 2.59E-5
end_X_over_Q_4_ctrl_room
X_over_Q_4_site_boundary
Time      (hr)      Value     (s/m*3)
8.033               5.98e-5
720                 0
end_X_over_Q_4_site_boundary
X_over_Q_4_low_population_zone
Time      (hr)      Value     (s/m*3)
0.167               2.12e-5
4.167               1.26e-6
8.033               2.12e-5
24                  8.40e-7
96                  3.45e-7
720                 1.11e-7
end_X_over_Q_4_low_population_zone
end_junction

junction
junction_type                 AIR_JUNCTION
downstream_location           AIR_SPACE
upstream                      DW
downstream                    RB
has_filter                    false
flow_rate
Time      (hr)      Value     (cfm)
6                   0
24                  1.875
720                 0.934
end_flow_rate
end_junction

junction
junction_type                 AIR_JUNCTION
downstream_location           AIR_SPACE
upstream                      WW
downstream                    RB
has_filter                    false
flow_rate
Time      (hr)      Value     (cfm)
6                   0
```

Ref.

```
24                  1.25
720                 0.625
end_flow_rate
end_junction

junction
junction_type                   AIR_JUNCTION
downstream_location             AIR_SPACE
upstream                        SP
downstream                      RB
has_filter                      true
flow_rate
Time    (hr)    Value   (cfm)
6               0
720             2.67
end_flow_rate
filter_efficiency
Time    NobleGas Elemiodine     Orgiodine Partiodine Solubles  Insolubles
720     0.5     0.0     0.0     1.0       0          0
end_filter_efficiency
end_junction

junction
junction_type                   AIR_JUNCTION
downstream_location             AIR_SPACE
upstream                        RB
downstream                      environment
has_filter                      true
flow_rate
Time    (hr)    Value   (cfm)
720             1600
end_flow_rate
filter_efficiency
Time    NobleGas Elemiodine     Orgiodine Partiodine Solubles  Insolubles
6       0       0       0       0         0          0
720     0       0.95    0.9     0.95      0.95       0.95
end_filter_efficiency
frac_4_daughter_resusp
Time    NobleGas Elemiodine     Orgiodine Partiodine Solubles  Insolubles
720     1       1       0       0         0          0
end_frac_4_daughter_resusp
X_over_Q_4_ctrl_room
Time    (hr)    Value   (s/m*3)
0.667           1.26E-4
2.667           2.27E-4
8.033           1.26E-4
24              4.30E-5
96              3.58E-5
720             2.59E-5
end_X_over_Q_4_ctrl_room
X_over_Q_4_site_boundary
Time    (hr)    Value   (s/m*3)
8.033           5.98e-5
720             0
end_X_over_Q_4_site_boundary
X_over_Q_4_low_population_zone
```

Ref.

```
Time      (hr)      Value     (s/m*3)
0.167               2.12e-5
4.167               1.26e-6
8.033               2.12e-5
24                  8.40e-7
96                  3.45e-7
720                 1.11e-7
end_X_over_Q_4_low_population_zone
end_junction

junction
junction_type                   AIR_JUNCTION
downstream_location             AIR_SPACE
upstream                        environment
downstream                      Control_Room
has_filter                      true
flow_rate
Time      (hr)      Value     (cfm)
720       2025
end_flow_rate
filter_efficiency
Time      NobleGas  Elemlodine        Orglodine Partlodine Solubles   Insolubles
720       0         0.95      0.9     0.95      0.95       0.95
end_filter_efficiency
frac_4_daughter_resusp
Time      NobleGas  Elemlodine        Orglodine Partlodine Solubles   Insolubles
720       1         1         0       0         0          0
end_frac_4_daughter_resusp
end_junction

junction
junction_type                   AIR_JUNCTION
downstream_location             AIR_SPACE
upstream                        environment
downstream                      Control_Room
has_filter                      false
flow_rate
Time      (hr)      Value     (cfm)
720       100
end_flow_rate
end_junction

junction
junction_type                   AIR_JUNCTION
downstream_location             AIR_SPACE
upstream                        Control_Room
downstream                      environment
has_filter                      false
flow_rate
Time      (hr)      Value     (cfm)
720       2125
end_flow_rate
X_over_Q_4_ctrl_room
Time      (hr)      Value     (s/m*3)
720       0
end_X_over_Q_4_ctrl_room
```

Project: Nine Mile Point Nuclear Station Unit: __1_ Disposition: ____

Originator/Date	Reviewer/Date	Calculation No.	Revision
H. Pustulka 12/12/06	D. Leaver 12/12/06	H21C092	00

Ref.

```
X_over_Q_4_site_boundary
Time      (hr)      Value     (s/m*3)
720       0
end_X_over_Q_4_site_boundary
X_over_Q_4_low_population_zone
Time      (hr)      Value     (s/m*3)
720       0
end_X_over_Q_4_low_population_zone
end_junction

environment
breathing_rate_sb
Time      (hr)      Value     (cms)
8.033               0.00035
720                 0.0
end_breathing_rate_sb
breathing_rate_lpz
Time      (hr)      Value     (cms)
8.033               0.00035
24                  0.00018
720                 0.00023
end_breathing_rate_lpz
end_environment
```

Ref.

Appendix E2.2: INPUT.DAT File Case 1A_RBEVS (RBEVS Actuation Check)

```
edit_time
0 0.033 0.0667  0.10 0.133 0.1667 0.20
end_edit_time

participating_isotopes
Kr83m  Kr85m  Kr85   Kr87   Kr88   Kr89
Xe131m Xe133m Xe133  Xe135m Xe135  Xe137  Xe138
I131Org I131Elem     I131Part
I132Org I132Elem     I132Part
I133Org I133Elem     I133Part
I134Org I134Elem     I134Part
I135Org I135Elem     I135Part
Rb86   Cs134  Cs136  Cs137
Sb127  Sb129  Te127m Te127  Te129m Te129  Te131m Te132
Ba137m Ba139  Ba140
Mo99   Tc99m  Ru103  Ru105  Ru106  Rh105
Y90    Y91    Y92    Y93    Zr95   Zr97   Nb95
La140  La141  La142  Pr143  Nd147  Am241  Cm242  Cm244
Ce141  Ce143  Ce144  Np239  Pu238  Pu239  Pu240  Pu241
Sr89   Sr90   Sr91   Sr92
end_participating_isotopes

core
thermal_power                    1887
elemental_iodine_frac            0.0485
organic_iodine_frac        0.0015
particulate_iodine_frac          0.95
release_frac
to_control_volume DW
Time N_Gas I_Grp CsGrp TeGrp BaGrp NMtls CeGrp LaGrp SrGrp
0.033    0      0      0      0      0      0      0      0      0
0.533    0.1    0.1    0.1    0      0      0      0      0      0
2.033    0.633  0.167  0.133  0.033  0.0133 0.00167 0.00033 0.00013 0.0133
720      0      0      0      0      0      0      0      0      0
end_to_control_volume
to_control_volume SP
Time N_Gas I_Grp CsGrp TeGrp BaGrp NMtls CeGrp LaGrp SrGrp
0.033    0      0      0      0      0      0      0      0      0
0.533    0      0.2    0      0      0      0      0      0      0
2.033    0      0.334  0      0      0      0      0      0      0
720      0      0      0      0      0      0      0      0      0
end_to_control_volume
end_release_frac
end_core

control_volume
obj_type                         OBJ_CV
name                             DW
air_volume                       1.8e+005
water_volume                     0
surface_area                     1
```

Ref.

```
has_recirc_filter                    false
removal_rate_to_surface
Time      NobleGas Elemlodine        Orglodine Partlodine Solubles  Insolubles
0.0642    0.0000   20.000   0.000   52.895    52.895    52.895
0.5297    0.0000   19.125   0.000   19.125    19.125    19.125
0.5569    0.0000   20.000   0.000   31.616    31.616    31.616
0.8337    0.0000   20.000   0.000   22.682    22.682    22.682
2.0181    0.0000   19.849   0.000   19.849    19.849    19.849
2.7602    0.0000   4.936    0.000   4.936     4.936     4.936
4.3139    0.0000   2.975    0.000   2.975     2.975     2.975
15.0234   0.0000   2.010    0.000   2.010     2.010     2.010
720.0000  0.0000   0.000    0.000   0.000     0.000     0.000
end_removal_rate_to_surface
frac_4_daughter_resusp_from_surface
Time      NobleGas Elemlodine        Orglodine Partlodine Solubles  Insolubles
720       1        0        0       0         0         0
end_frac_4_daughter_resusp_from_surface
end_control_volume

control_volume
obj_type                             OBJ_CV
name                                 WW
air_volume                           1.2e+005
water_volume                         7.97e+004
surface_area                         0
has_recirc_filter                    false
removal_rate_to_waterpool
Time      NobleGas Elemlodine        Orglodine Partlodine Solubles  Insolubles
720       0        0        0       0         0         0
end_removal_rate_to_waterpool
frac_4_daughter_resusp_from_water
Time      NobleGas Elemlodine        Orglodine Partlodine Solubles  Insolubles
720       0        0        0       0         0         0
end_frac_4_daughter_resusp_from_water
decontamination_factor
Time      NobleGas Elemlodine        Orglodine Partlodine Solubles  Insolubles
720       1        1        1       1         1         1
end_decontamination_factor
end_control_volume

control_volume
obj_type                             OBJ_CV
name                                 SL1
air_volume                           82.4
water_volume                         0
surface_area                         0
has_recirc_filter                    false
removal_rate_to_surface
Time      NobleGas Elemlodine        Orglodine Partlodine Solubles  Insolubles
0.0435    0.0000   0.000    0.000   1.354     1.354     1.354
0.2929    0.0000   0.000    0.000   1.246     1.246     1.246
0.5623    0.0000   0.000    0.000   0.860     0.860     0.860
1.2111    0.0000   0.000    0.000   0.752     0.752     0.752
2.2441    0.0000   0.000    0.000   0.777     0.777     0.777
4.9854    0.0000   0.000    0.000   0.691     0.691     0.691
8.0281    0.0000   0.000    0.000   0.498     0.498     0.498
```

Ref.

```
24.0808  0.0000  0.000  0.000  0.317  0.317  0.317
720      0.0000  0.000  0.000  0.000  0.000  0.000
end_removal_rate_to_surface
frac_4_daughter_resusp_from_surface
Time     NobleGas Elemiodine      Orgiodine Partiodine Solubles  Insolubles
720      1        0       0       0        0        0
end_frac_4_daughter_resusp_from_surface
end_control_volume

control_volume
obj_type                         OBJ_CV
name                             SL2
air_volume                       82.4
water_volume                     0
surface_area                     0
has_recirc_filter                false
removal_rate_to_surface
Time     NobleGas Elemiodine      Orgiodine Partiodine Solubles  Insolubles
0.0435   0.0000  0.000  0.000  1.354  1.354  1.354
0.2929   0.0000  0.000  0.000  1.246  1.246  1.246
0.5623   0.0000  0.000  0.000  0.860  0.860  0.860
1.2111   0.0000  0.000  0.000  0.752  0.752  0.752
2.2441   0.0000  0.000  0.000  0.777  0.777  0.777
4.9854   0.0000  0.000  0.000  0.691  0.691  0.691
8.0281   0.0000  0.000  0.000  0.498  0.498  0.498
24.0808  0.0000  0.000  0.000  0.317  0.317  0.317
720      0.0000  0.000  0.000  0.000  0.000  0.000
end_removal_rate_to_surface
frac_4_daughter_resusp_from_surface
Time     NobleGas Elemiodine      Orgiodine Partiodine Solubles  Insolubles
720      1        0       0       0        0        0
end_frac_4_daughter_resusp_from_surface
end_control_volume

control_volume
obj_type                         OBJ_CV
name                             RB
air_volume                       1.06e+006
water_volume                     0
surface_area                     0
has_recirc_filter                false
end_control_volume

control_volume
obj_type                         OBJ_CV
name                             SP
air_volume                       7.97e+004
water_volume                     0
surface_area                     0
has_recirc_filter                false
end_control_volume

control_volume
obj_type                         OBJ_CV
name                             Dummy
air_volume                       100
```

Ref.

```
water_volume                    0
surface_area                    0
has_recirc_filter               false
end_control_volume

control_volume
obj_type                        OBJ_CR
name                            Control_Room
air_volume                      1.35e+005
water_volume                    0
surface_area                    0
has_recirc_filter               false
breathing_rate
Time      (hr)      Value     (cms)
720                 0.00035
end_breathing_rate
occupancy_factor
Time      (hr)      Value     (frac)
24                  1
96                  0.6
720                 0.4
end_occupancy_factor
end_control_volume

junction
junction_type                   AIR_JUNCTION
downstream_location             AIR_SPACE
upstream                        CORE
downstream                      DW
has_filter                      false
flow_rate
Time      (hr)      Value     (cfm)
720                 1
end_flow_rate
end_junction

junction
junction_type                   AIR_JUNCTION
downstream_location             AIR_SPACE
upstream                        CORE
downstream                      SP
has_filter                      false
flow_rate
Time      (hr)      Value     (cfm)
720                 1
end_flow_rate
end_junction

junction
junction_type                   AIR_JUNCTION
downstream_location             WATER_POOL
upstream                        DW
downstream                      WW
has_filter                      false
flow_rate
Time      (hr)      Value     (cfm)
```

Ref.

```
2.033           0
720             1.8e5
end_flow_rate
end_junction

junction
junction_type                   AIR_JUNCTION
downstream_location             AIR_SPACE
upstream                        WW
downstream                      DW
has_filter                      false
flow_rate
Time    (hr)    Value   (cfm)
2.033           0
720             1.8e5
end_flow_rate
end_junction

junction
junction_type                   AIR_JUNCTION
downstream_location             AIR_SPACE
upstream                        DW
downstream                      SL1
has_filter                      true
flow_rate
Time    (hr)    Value   (cfm)
24              0.342
720             0.171
end_flow_rate
filter_efficiency
Time    NobleGas Elemlodine     Orglodine Partlodine Solubles  Insolubles
720     0        0.5     0      0.5       0.5        0.5
end_filter_efficiency
frac_4_daughter_resusp
Time    NobleGas Elemlodine     Orglodine Partlodine Solubles  Insolubles
720     1        0       0      0         0          0
end_frac_4_daughter_resusp
end_junction

junction
junction_type                   AIR_JUNCTION
downstream_location             AIR_SPACE
upstream                        SL1
downstream                      Dummy
has_filter                      false
flow_rate
Time    (hr)    Value   (cfm)
24              0.398
720             0.199
end_flow_rate
end_junction

junction
junction_type                   AIR_JUNCTION
downstream_location             AIR_SPACE
upstream                        DW
```

Ref.

```
downstream                          SL2
has_filter                          true
flow_rate
Time      (hr)      Value     (cfm)
24                  0.342
720                 0.171
end_flow_rate
filter_efficiency
Time      NobleGas  Elemlodine        Orglodine  Partlodine Solubles   Insolubles
720       0         0.5       0       0.5        0.5        0.5
end_filter_efficiency
frac_4_daughter_resusp
Time      NobleGas  Elemlodine        Orglodine  Partlodine Solubles   Insolubles
720       1         0         0       0          0          0
end_frac_4_daughter_resusp
end_junction

junction
junction_type                       AIR_JUNCTION
downstream_location         AIR_SPACE
upstream                            SL2
downstream                          Dummy
has_filter                          false
flow_rate
Time      (hr)      Value     (cfm)
24                  0.398
720                 0.199
end_flow_rate
end_junction

junction
junction_type                       AIR_JUNCTION
downstream_location         AIR_SPACE
upstream                            DW
downstream                          Dummy
has_filter                          true
flow_rate
Time      (hr)      Value     (cfm)
24                  0.284
720                 0.142
end_flow_rate
filter_efficiency
Time      NobleGas  Elemlodine        Orglodine  Partlodine Solubles   Insolubles
720       0         0.5       0       0.5        0.5        0.5
end_filter_efficiency
frac_4_daughter_resusp
Time      NobleGas  Elemlodine        Orglodine  Partlodine Solubles   Insolubles
720       1         0         0       0          0          0
end_frac_4_daughter_resusp
end_junction

junction
junction_type                       AIR_JUNCTION
downstream_location         AIR_SPACE
upstream                    DW
downstream                          RB
```

Ref.

```
has_filter                  false
flow_rate
Time    (hr)    Value   (cfm)
720             1.875
end_flow_rate
end_junction

junction
junction_type                       AIR_JUNCTION
downstream_location         AIR_SPACE
upstream                    WW
downstream                          RB
has_filter                  false
flow_rate
Time    (hr)    Value   (cfm)
720             1.25
end_flow_rate
end_junction

junction
junction_type                       AIR_JUNCTION
downstream_location         AIR_SPACE
upstream                            SP
downstream                          RB
has_filter                          true
flow_rate
Time    (hr)    Value   (cfm)
720             2.67
end_flow_rate
filter_efficiency
Time    NobleGas Elemiodine         Orgiodine Partiodine Solubles   Insolubles
720     0.5     0.0     0.0         1.0       0          0
end_filter_efficiency
end_junction

junction
junction_type                       AIR_JUNCTION
downstream_location         AIR_SPACE
upstream                            RB
downstream                          Environment
has_filter                          false
flow_rate
Time    (hr)    Value   (cfm)
720             77000
end_flow_rate
X_over_Q_4_ctrl_room
Time    (hr)    Value   (s/m*3)
720     0
end_X_over_Q_4_ctrl_room
X_over_Q_4_site_boundary
Time    (hr)    Value   (s/m*3)
720     0
end_X_over_Q_4_site_boundary
X_over_Q_4_low_population_zone
Time    (hr)    Value   (s/m*3)
720     0
```

Project: Nine Mile Point Nuclear Station Unit: __1_ Disposition: ____

Originator/Date	Reviewer/Date	Calculation No.	Revision
H. Pustulka 12/12/06	D. Leaver 12/12/06	H21C092	00

Ref.

```
end_X_over_Q_4_low_population_zone
end_junction

junction
junction_type                    AIR_JUNCTION
downstream_location              AIR_SPACE
upstream                         environment
downstream                       Control_Room
has_filter                       true
flow_rate
Time     (hr)     Value    (cfm)
720      2025
end_flow_rate
filter_efficiency
Time     NobleGas Elemlodine       Orglodine Partlodine Solubles  Insolubles
720      0        0.95     0.9     0.95      0.95      0.95
end_filter_efficiency
frac_4_daughter_resusp
Time     NobleGas Elemlodine       Orglodine Partlodine Solubles  Insolubles
720      1        1        0       0         0         0
end_frac_4_daughter_resusp
end_junction

junction
junction_type                    AIR_JUNCTION
downstream_location              AIR_SPACE
upstream                         environment
downstream                       Control_Room
has_filter                       false
flow_rate
Time     (hr)     Value    (cfm)
720      100
end_flow_rate
end_junction

junction
junction_type                    AIR_JUNCTION
downstream_location              AIR_SPACE
upstream                         Control_Room
downstream                       environment
has_filter                       false
flow_rate
Time     (hr)     Value    (cfm)
720      2125
end_flow_rate
X_over_Q_4_ctrl_room
Time     (hr)     Value    (s/m*3)
720      0
end_X_over_Q_4_ctrl_room
X_over_Q_4_site_boundary
Time     (hr)     Value    (s/m*3)
720      0
end_X_over_Q_4_site_boundary
X_over_Q_4_low_population_zone
Time     (hr)     Value    (s/m*3)
720      0
```

Ref.

```
end_X_over_Q_4_low_population_zone
end_junction

environment
breathing_rate_sb
Time      (hr)      Value     (cms)
8.033               0.00035
720                 0.0
end_breathing_rate_sb
breathing_rate_lpz
Time      (hr)      Value     (cms)
8.033               0.00035
24                  0.00018
720                 0.00023
end_breathing_rate_lpz
end_environment
```

Ref.

Appendix E2.3: INPUT.DAT File Case 1A (Integrated Check Calc for Appendix D)

```
edit_time
0 0.417 0.667 0.917 1.167 1.417 1.667 1.917 2.033 2.167 2.417 2.667 2.917 3.167 3.667 4.167 6 8.033 24 48 96 240 720
end_edit_time

participating_isotopes
Kr83m  Kr85m  Kr85   Kr87   Kr88   Kr89
Xe131m Xe133m Xe133  Xe135m Xe135  Xe137  Xe138
I131Org I131Elem     I131Part
I132Org I132Elem     I132Part
I133Org I133Elem     I133Part
I134Org I134Elem     I134Part
I135Org I135Elem     I135Part
Rb86   Cs134  Cs136  Cs137
Sb127  Sb129  Te127m Te127  Te129m Te129  Te131m Te132
Ba137m Ba139  Ba140
Mo99   Tc99m  Ru103  Ru105  Ru106  Rh105
Y90    Y91    Y92    Y93    Zr95   Zr97   Nb95
La140  La141  La142  Pr143  Nd147  Am241  Cm242  Cm244
Ce141  Ce143  Ce144  Np239  Pu238  Pu239  Pu240  Pu241
Sr89   Sr90   Sr91   Sr92
end_participating_isotopes

core
thermal_power                    1887
elemental_iodine_frac            0.0485
organic_iodine_frac      0.0015
particulate_iodine_frac          0.95
release_frac
to_control_volume DW
Time N_Gas I_Grp CsGrp TeGrp BaGrp NMtls CeGrp LaGrp SrGrp
0.033    0       0       0       0       0       0       0       0       0
0.533    0.1     0.1     0.1     0       0       0       0       0       0
2.033    0.633   0.167   0.133   0.033   0.0133  0.00167 0.00033 0.00013 0.0133
720      0       0       0       0       0       0       0       0       0
end_to_control_volume
to_control_volume SP
Time N_Gas I_Grp CsGrp TeGrp BaGrp NMtls CeGrp LaGrp SrGrp
0.033    0       0       0       0       0       0       0       0       0
0.533    0       0.2     0       0       0       0       0       0       0
2.033    0       0.334   0       0       0       0       0       0       0
720      0       0       0       0       0       0       0       0       0
end_to_control_volume
end_release_frac
end_core

control_volume
obj_type                         OBJ_CV
name                             DW
air_volume                       1.8e+005
water_volume                     0
surface_area                     1
has_recirc_filter                false
```

Ref.

removal_rate_to_surface

Time	NobleGas	Elemlodine		Orglodine	Partlodine	Solubles	Insolubles
0.0642	0.0000	20.000	0.000	52.895	52.895	52.895	
0.5297	0.0000	19.125	0.000	19.125	19.125	19.125	
0.5569	0.0000	20.000	0.000	31.616	31.616	31.616	
0.8337	0.0000	20.000	0.000	22.682	22.682	22.682	
2.0181	0.0000	19.849	0.000	19.849	19.849	19.849	
2.7602	0.0000	4.936	0.000	4.936	4.936	4.936	
4.3139	0.0000	2.975	0.000	2.975	2.975	2.975	
15.0234	0.0000	2.010	0.000	2.010	2.010	2.010	
720.0000	0.0000	0.000	0.000	0.000	0.000	0.000	

end_removal_rate_to_surface

frac_4_daughter_resusp_from_surface

Time	NobleGas	Elemlodine		Orglodine	Partlodine	Solubles	Insolubles
720	1	0	0	0	0	0	

end_frac_4_daughter_resusp_from_surface

end_control_volume

control_volume

obj_type	OBJ_CV
name	WW
air_volume	1.2e+005
water_volume	7.97e+004
surface_area	0
has_recirc_filter	false

removal_rate_to_waterpool

Time	NobleGas	Elemlodine		Orglodine	Partlodine	Solubles	Insolubles
720	0	0	0	0	0	0	

end_removal_rate_to_waterpool

frac_4_daughter_resusp_from_water

Time	NobleGas	Elemlodine		Orglodine	Partlodine	Solubles	Insolubles
720	0	0	0	0	0	0	

end_frac_4_daughter_resusp_from_water

decontamination_factor

Time	NobleGas	Elemlodine		Orglodine	Partlodine	Solubles	Insolubles
720	1	1	1	1	1	1	

end_decontamination_factor

end_control_volume

control_volume

obj_type	OBJ_CV
name	SL1
air_volume	82.4
water_volume	0
surface_area	0
has_recirc_filter	false

removal_rate_to_surface

Time	NobleGas	Elemlodine		Orglodine	Partlodine	Solubles	Insolubles
0.0435	0.0000	0.000	0.000	1.354	1.354	1.354	
0.2929	0.0000	0.000	0.000	1.246	1.246	1.246	
0.5623	0.0000	0.000	0.000	0.860	0.860	0.860	
1.2111	0.0000	0.000	0.000	0.752	0.752	0.752	
2.2441	0.0000	0.000	0.000	0.777	0.777	0.777	
4.9854	0.0000	0.000	0.000	0.691	0.691	0.691	
8.0281	0.0000	0.000	0.000	0.498	0.498	0.498	
24.0808	0.0000	0.000	0.000	0.317	0.317	0.317	

Ref.

```
720        0.0000    0.000     0.000     0.000     0.000     0.000
end_removal_rate_to_surface
frac_4_daughter_resusp_from_surface
Time       NobleGas  Elemlodine          Orglodine Partlodine Solubles  Insolubles
720        1         0         0         0         0         0
end_frac_4_daughter_resusp_from_surface
end_control_volume

control_volume
obj_type                                 OBJ_CV
name                                     SL2
air_volume                               82.4
water_volume                             0
surface_area                             0
has_recirc_filter                        false
removal_rate_to_surface
Time       NobleGas  Elemlodine          Orglodine Partlodine Solubles  Insolubles
0.0435     0.0000    0.000     0.000     1.354     1.354     1.354
0.2929     0.0000    0.000     0.000     1.246     1.246     1.246
0.5623     0.0000    0.000     0.000     0.860     0.860     0.860
1.2111     0.0000    0.000     0.000     0.752     0.752     0.752
2.2441     0.0000    0.000     0.000     0.777     0.777     0.777
4.9854     0.0000    0.000     0.000     0.691     0.691     0.691
8.0281     0.0000    0.000     0.000     0.498     0.498     0.498
24.0808    0.0000    0.000     0.000     0.317     0.317     0.317
720        0.0000    0.000     0.000     0.000     0.000     0.000
end_removal_rate_to_surface
frac_4_daughter_resusp_from_surface
Time       NobleGas  Elemlodine          Orglodine Partlodine Solubles  Insolubles
720        1         0         0         0         0         0
end_frac_4_daughter_resusp_from_surface
end_control_volume

control_volume
obj_type                                 OBJ_CV
name                                     RB
air_volume                               1.06e+006
water_volume                             0
surface_area                             0
has_recirc_filter                        false
end_control_volume

control_volume
obj_type                                 OBJ_CV
name                                     RB'
air_volume                               100
water_volume                             0
surface_area                             0
has_recirc_filter                        false
end_control_volume

control_volume
obj_type                                 OBJ_CV
name                                     SP
air_volume                               7.97e+004
water_volume                             0
```

Ref.

```
surface_area                    0
has_recirc_filter               false
end_control_volume

control_volume
obj_type                        OBJ_CR
name                            Control_Room
air_volume                      1.35e+005
water_volume                    0
surface_area                    0
has_recirc_filter               false
breathing_rate
Time      (hr)      Value     (cms)
720                 0.00035
end_breathing_rate
occupancy_factor
Time      (hr)      Value     (frac)
24                  1
96                  0.6
720                 0.4
end_occupancy_factor
end_control_volume


junction
junction_type                   AIR_JUNCTION
downstream_location             AIR_SPACE
upstream                        CORE
downstream                      DW
has_filter                      false
flow_rate
Time      (hr)      Value     (cfm)
720                 1
end_flow_rate
end_junction

junction
junction_type                   AIR_JUNCTION
downstream_location             AIR_SPACE
upstream                        CORE
downstream                      SP
has_filter                      false
flow_rate
Time      (hr)      Value     (cfm)
720                 1
end_flow_rate
end_junction

junction
junction_type                   AIR_JUNCTION
downstream_location             WATER_POOL
upstream                        DW
downstream                      WW
has_filter                      false
flow_rate
Time      (hr)      Value     (cfm)
```

Ref.

```
2.033           0
720             1.8e5
end_flow_rate
end_junction

junction
junction_type                   AIR_JUNCTION
downstream_location             AIR_SPACE
upstream                        WW
downstream                      DW
has_filter                      false
flow_rate
Time    (hr)    Value   (cfm)
2.033           0
720             1.8e5
end_flow_rate
end_junction

junction
junction_type                   AIR_JUNCTION
downstream_location             AIR_SPACE
upstream                        DW
downstream                      SL1
has_filter                      true
flow_rate
Time    (hr)    Value   (cfm)
24              0.342
720             0.171
end_flow_rate
filter_efficiency
Time    NobleGas Elemiodine     Orgiodine Partiodine Solubles  Insolubles
720     0       0.5     0       0.5       0.5        0.5
end_filter_efficiency
frac_4_daughter_resusp
Time    NobleGas Elemiodine     Orgiodine Partiodine Solubles  Insolubles
720     1       0       0       0         0          0
end_frac_4_daughter_resusp
end_junction

junction
junction_type                   AIR_JUNCTION
downstream_location             AIR_SPACE
upstream                        SL1
downstream                      environment
has_filter                      false
flow_rate
Time    (hr)    Value   (cfm)
24              0.398
720             0.199
end_flow_rate
X_over_Q_4_ctrl_room
Time    (hr)    Value   (s/m*3)
0.667           5.85e-4
2.667           1.03e-3
8.033           5.85e-4
24              2.07e-4
```

Ref.

```
96                  1.75e-4
720                 1.52e-4
end_X_over_Q_4_ctrl_room
X_over_Q_4_site_boundary
Time      (hr)      Value     (s/m*3)
0.667               0
2.667               1.90e-4
720                 0
end_X_over_Q_4_site_boundary
X_over_Q_4_low_population_zone
Time      (hr)      Value     (s/m*3)
8.033               1.63e-5
24                  1.10e-5
96                  4.67e-6
720                 1.37e-6
end_X_over_Q_4_low_population_zone
end_junction

junction
junction_type                 AIR_JUNCTION
downstream_location           AIR_SPACE
upstream                      DW
downstream                    SL2
has_filter                    true
flow_rate
Time      (hr)      Value     (cfm)
24                  0.342
720                 0.171
end_flow_rate
filter_efficiency
Time      NobleGas  Elemiodine        Orgiodine  Partiodine  Solubles   Insolubles
720       0         0.5       0       0.5        0.5         0.5
end_filter_efficiency
frac_4_daughter_resusp
Time      NobleGas  Elemiodine        Orgiodine  Partiodine  Solubles   Insolubles
720       1         0         0       0          0           0
end_frac_4_daughter_resusp
end_junction

junction
junction_type                 AIR_JUNCTION
downstream_location           AIR_SPACE
upstream                      SL2
downstream                    environment
has_filter                    false
flow_rate
Time      (hr)      Value     (cfm)
24                  0.398
720                 0.199
end_flow_rate
X_over_Q_4_ctrl_room
Time      (hr)      Value     (s/m*3)
0.667               5.85e-4
2.667               1.03e-3
8.033               5.85e-4
24                  2.07e-4
```

Ref.

```
96                  1.75e-4
720                 1.52e-4
end_X_over_Q_4_ctrl_room
X_over_Q_4_site_boundary
Time    (hr)        Value       (s/m*3)
0.667               0
2.667               1.90e-4
720                 0
end_X_over_Q_4_site_boundary
X_over_Q_4_low_population_zone
Time    (hr)        Value       (s/m*3)
8.033               1.63e-5
24                  1.10e-5
96                  4.67e-6
720                 1.37e-6
end_X_over_Q_4_low_population_zone
end_junction

junction
junction_type                   AIR_JUNCTION
downstream_location         AIR_SPACE
upstream                        DW
downstream                      environment
has_filter                      true
flow_rate
Time    (hr)        Value       (cfm)
6                   2.159
24                  0.284
720                 0.142
end_flow_rate
filter_efficiency
Time    NobleGas    Elemiodine      Orgiodine   Partiodine  Solubles    Insolubles
6       0           0.066       0       0.066       0.066       0.066
720     0           0.5         0       0.5         0.5         0.5
end_filter_efficiency
frac_4_daughter_resusp
Time    NobleGas    Elemiodine      Orgiodine   Partiodine  Solubles    Insolubles
720     1           0           0       0           0           0
end_frac_4_daughter_resusp
X_over_Q_4_ctrl_room
Time    (hr)        Value       (s/m*3)
0.667               3.04e-4
2.667               5.54e-4
6                   3.04e-4
8.033               5.85e-4
24                  2.07e-4
96                  1.75e-4
720                 1.52e-4
end_X_over_Q_4_ctrl_room
X_over_Q_4_site_boundary
Time    (hr)        Value       (s/m*3)
0.667               0
2.667               1.90e-4
720                 0
end_X_over_Q_4_site_boundary
X_over_Q_4_low_population_zone
```

Ref.

```
Time      (hr)      Value     (s/m*3)
8.033               1.63e-5
24                  1.10e-5
96                  4.67e-6
720                 1.37e-6
end_X_over_Q_4_low_population_zone
end_junction

junction
junction_type                 AIR_JUNCTION
downstream_location           AIR_SPACE
upstream                      WW
downstream                    environment
has_filter                    false
flow_rate
Time      (hr)      Value     (cfm)
6                   1.25
720                 0.0
end_flow_rate
X_over_Q_4_ctrl_room
Time      (hr)      Value     (s/m*3)
0.667               2.61e-4
2.667               4.82e-4
8.033               2.61e-4
24                  9.25e-5
96                  6.7e-5
720                 4.93e-5
end_X_over_Q_4_ctrl_room
X_over_Q_4_site_boundary
Time      (hr)      Value     (s/m*3)
0.667               0
2.667               1.90e-4
720                 0
end_X_over_Q_4_site_boundary
X_over_Q_4_low_population_zone
Time      (hr)      Value     (s/m*3)
8.033               1.63e-5
24                  1.10e-5
96                  4.67e-6
720                 1.37e-6
end_X_over_Q_4_low_population_zone
end_junction

junction
junction_type                 AIR_JUNCTION
downstream_location           AIR_SPACE
upstream                      SP
downstream                    RB'
has_filter                    true
flow_rate
Time      (hr)      Value     (cfm)
6                   2.67
720                 0
end_flow_rate
filter_efficiency
Time      NobleGas  Elemiodine  Orgiodine  Partiodine  Solubles  Insolubles
```

Ref.

```
720     0.5     0.0     0.0     1.0     0     0
end_filter_efficiency
end_junction

junction
junction_type                   AIR_JUNCTION
downstream_location             AIR_SPACE
upstream                        RB'
downstream                      environment
has_filter                      false
flow_rate
Time    (hr)    Value   (cfm)
0.5             1481
0.7             918
1               792
2.0333          474
4.1667          252
720             0
end_flow_rate
X_over_Q_4_ctrl_room
Time    (hr)    Value   (s/m*3)
0.667           2.61e-4
2.667           4.82e-4
8               2.61e-4
24              9.25e-5
96              6.7e-5
720             4.93e-5
end_X_over_Q_4_ctrl_room
X_over_Q_4_site_boundary
Time    (hr)    Value   (s/m*3)
0.667           0
2.667           1.90e-4
720             0
end_X_over_Q_4_site_boundary
X_over_Q_4_low_population_zone
Time    (hr)    Value   (s/m*3)
8.033           1.63e-5
24              1.10e-5
96              4.67e-6
720             1.37e-6
end_X_over_Q_4_low_population_zone
end_junction

junction
junction_type                   AIR_JUNCTION
downstream_location             AIR_SPACE
upstream                        RB'
downstream                      environment
has_filter                      true
flow_rate
Time    (hr)    Value   (cfm)
0.5             0
0.7             495
1               1761
2.0333          5253
6               6710
```

Ref.

```
720                 0
end_flow_rate
filter_efficiency
Time    NobleGas Elemiodine          Orgiodine Partiodine Solubles  Insolubles
720     0        0.95     0.9       0.95      0.95       0.95
end_filter_efficiency
frac_4_daughter_resusp
Time    NobleGas Elemiodine          Orgiodine Partiodine Solubles  Insolubles
720     1        1        0         0         0          0
end_frac_4_daughter_resusp
X_over_Q_4_ctrl_room
Time    (hr)     Value    (s/m*3)
0.667            1.26E-4
2.667            2.27E-4
8.033            1.26E-4
24               4.30E-5
96               3.58E-5
720              2.59E-5
end_X_over_Q_4_ctrl_room
X_over_Q_4_site_boundary
Time    (hr)     Value    (s/m*3)
0.667            0
2.667            5.98e-5
720              0
end_X_over_Q_4_site_boundary
X_over_Q_4_low_population_zone
Time    (hr)     Value    (s/m*3)
0.167            2.12e-5
4.167            1.26e-6
8.033            2.12e-5
24               8.40e-7
96               3.45e-7
720              1.11e-7
end_X_over_Q_4_low_population_zone
end_junction

junction
junction_type                AIR_JUNCTION
downstream_location          AIR_SPACE
upstream                     DW
downstream                   RB
has_filter                   false
flow_rate
Time    (hr)     Value    (cfm)
6                0
24               1.875
720              0.934
end_flow_rate
end_junction

junction
junction_type                AIR_JUNCTION
downstream_location          AIR_SPACE
upstream                     WW
downstream                   RB
has_filter                   false
```

Ref.

```
flow_rate
Time      (hr)      Value     (cfm)
6                   0
24                  1.25
720                 0.625
end_flow_rate
end_junction

junction
junction_type                 AIR_JUNCTION
downstream_location           AIR_SPACE
upstream                      SP
downstream                    RB
has_filter                    true
flow_rate
Time      (hr)      Value     (cfm)
6                   0
720                 2.67
end_flow_rate
filter_efficiency
Time      NobleGas  Elemlodine          Orglodine  Partlodine  Solubles   Insolubles
720       0.5       0.0       0.0       1.0        0           0
end_filter_efficiency
end_junction

junction
junction_type                 AIR_JUNCTION
downstream_location           AIR_SPACE
upstream                      RB
downstream                    environment
has_filter                    true
flow_rate
Time      (hr)      Value     (cfm)
720                 1600
end_flow_rate
filter_efficiency
Time      NobleGas  Elemlodine          Orglodine  Partlodine  Solubles   Insolubles
6         0         0         0         0          0           0
720       0         0.95      0.9       0.95       0.95        0.95
end_filter_efficiency
frac_4_daughter_resusp
Time      NobleGas  Elemlodine          Orglodine  Partlodine  Solubles   Insolubles
720       1         1         0         0          0           0
end_frac_4_daughter_resusp
X_over_Q_4_ctrl_room
Time      (hr)      Value     (s/m*3)
0.667               1.26E-4
2.667               2.27E-4
8.033               1.26E-4
24                  4.30E-5
96                  3.58E-5
720                 2.59E-5
end_X_over_Q_4_ctrl_room
X_over_Q_4_site_boundary
Time      (hr)      Value     (s/m*3)
0.667               0
```

Ref.

```
2.667          5.98e-5
720            0
end_X_over_Q_4_site_boundary
X_over_Q_4_low_population_zone
Time    (hr)    Value    (s/m*3)
0.167          2.12e-5
4.167          1.26e-6
8.033          2.12e-5
24             8.40e-7
96             3.45e-7
720            1.11e-7
end_X_over_Q_4_low_population_zone
end_junction

junction
junction_type                  AIR_JUNCTION
downstream_location      AIR_SPACE
upstream                       environment
downstream                     Control_Room
has_filter                     true
flow_rate
Time    (hr)    Value    (cfm)
720     2025
end_flow_rate
filter_efficiency
Time    NobleGas Elemlodine      Orglodine Partlodine Solubles  Insolubles
720     0        0.95    0.9     0.95      0.95       0.95
end_filter_efficiency
frac_4_daughter_resusp
Time    NobleGas Elemlodine      Orglodine Partlodine Solubles  Insolubles
720     1        1       0       0         0          0
end_frac_4_daughter_resusp
end_junction

junction
junction_type                  AIR_JUNCTION
downstream_location      AIR_SPACE
upstream                       environment
downstream                     Control_Room
has_filter                     false
flow_rate
Time    (hr)    Value    (cfm)
720     100
end_flow_rate
end_junction

junction
junction_type                  AIR_JUNCTION
downstream_location      AIR_SPACE
upstream                       Control_Room
downstream                     environment
has_filter                     false
flow_rate
Time    (hr)    Value    (cfm)
720     2125
end_flow_rate
```

Ref.

```
X_over_Q_4_ctrl_room
Time      (hr)      Value     (s/m*3)
720       0
end_X_over_Q_4_ctrl_room
X_over_Q_4_site_boundary
Time      (hr)      Value     (s/m*3)
720       0
end_X_over_Q_4_site_boundary
X_over_Q_4_low_population_zone
Time      (hr)      Value     (s/m*3)
720       0
end_X_over_Q_4_low_population_zone
end_junction

environment
breathing_rate_sb
Time      (hr)      Value     (cms)
8.033               0.00035
720                 0.0
end_breathing_rate_sb
breathing_rate_lpz
Time      (hr)      Value     (cms)
8.033               0.00035
24                  0.00018
720                 0.00023
end_breathing_rate_lpz
end_environment
```

Ref.

Appendix E2.4: INPUT.DAT File Case 1Ax (MSIV Leakage & Permanent Bypass)

```
edit_time
0 0.417 0.667 0.917 1.167 1.417 1.667 1.917 2.033 2.167 2.417 2.667 2.917 3.167 3.667 4.167 6 8.033 24 48 96 240 720
end_edit_time

participating_isotopes
Kr83m  Kr85m  Kr85   Kr87   Kr88   Kr89
Xe131m Xe133m Xe133  Xe135m Xe135  Xe137  Xe138
I131Org I131Elem     I131Part
I132Org I132Elem     I132Part
I133Org I133Elem     I133Part
I134Org I134Elem     I134Part
I135Org I135Elem     I135Part
Rb86   Cs134  Cs136  Cs137
Sb127  Sb129  Te127m Te127  Te129m Te129  Te131m Te132
Ba137m Ba139  Ba140
Mo99   Tc99m  Ru103  Ru105  Ru106  Rh105
Y90    Y91    Y92    Y93    Zr95   Zr97   Nb95
La140  La141  La142  Pr143  Nd147  Am241  Cm242  Cm244
Ce141  Ce143  Ce144  Np239  Pu238  Pu239  Pu240  Pu241
Sr89   Sr90   Sr91   Sr92
end_participating_isotopes

core
thermal_power                    1887
elemental_iodine_frac            0.0485
organic_iodine_frac        0.0015
particulate_iodine_frac          0.95
release_frac
to_control_volume DW
Time N_Gas I_Grp CsGrp TeGrp BaGrp NMtls CeGrp LaGrp SrGrp
0.033   0       0       0       0       0       0       0       0       0
0.533   0.1     0.1     0.1     0       0       0       0       0       0
2.033   0.633   0.167   0.133   0.033   0.0133  0.00167 0.00033 0.00013 0.0133
720     0       0       0       0       0       0       0       0       0
end_to_control_volume
to_control_volume SP
Time N_Gas I_Grp CsGrp TeGrp BaGrp NMtls CeGrp LaGrp SrGrp
0.033   0       0       0       0       0       0       0       0       0
0.533   0       0.2     0       0       0       0       0       0       0
2.033   0       0.334   0       0       0       0       0       0       0
720     0       0       0       0       0       0       0       0       0
end_to_control_volume
end_release_frac
end_core

control_volume
obj_type                         OBJ_CV
name                             DW
air_volume                       1.8e+005
water_volume                     0
surface_area                     1
has_recirc_filter                false
removal_rate_to_surface
```

Ref.

Time	NobleGas	Elemlodine		Orglodine	Partlodine	Solubles	Insolubles
0.0642	0.0000	20.000	0.000	52.895	52.895	52.895	
0.5297	0.0000	19.125	0.000	19.125	19.125	19.125	
0.5569	0.0000	20.000	0.000	31.616	31.616	31.616	
0.8337	0.0000	20.000	0.000	22.682	22.682	22.682	
2.0181	0.0000	19.849	0.000	19.849	19.849	19.849	
2.7602	0.0000	4.936	0.000	4.936	4.936	4.936	
4.3139	0.0000	2.975	0.000	2.975	2.975	2.975	
15.0234	0.0000	2.010	0.000	2.010	2.010	2.010	
720.0000	0.0000	0.000	0.000	0.000	0.000	0.000	

end_removal_rate_to_surface
frac_4_daughter_resusp_from_surface

Time	NobleGas	Elemlodine		Orglodine	Partlodine	Solubles	Insolubles
720	1	0	0	0	0	0	

end_frac_4_daughter_resusp_from_surface
end_control_volume

control_volume

obj_type	OBJ_CV
name	WW
air_volume	1.2e+005
water_volume	7.97e+004
surface_area	0
has_recirc_filter	false

removal_rate_to_waterpool

Time	NobleGas	Elemlodine		Orglodine	Partlodine	Solubles	Insolubles
720	0	0	0	0	0	0	

end_removal_rate_to_waterpool
frac_4_daughter_resusp_from_water

Time	NobleGas	Elemlodine		Orglodine	Partlodine	Solubles	Insolubles
720	0	0	0	0	0	0	

end_frac_4_daughter_resusp_from_water
decontamination_factor

Time	NobleGas	Elemlodine		Orglodine	Partlodine	Solubles	Insolubles
720	1	1	1	1	1	1	

end_decontamination_factor
end_control_volume

control_volume

obj_type	OBJ_CV
name	SL1
air_volume	82.4
water_volume	0
surface_area	0
has_recirc_filter	false

removal_rate_to_surface

Time	NobleGas	Elemlodine		Orglodine	Partlodine	Solubles	Insolubles
0.0435	0.0000	0.000	0.000	1.354	1.354	1.354	
0.2929	0.0000	0.000	0.000	1.246	1.246	1.246	
0.5623	0.0000	0.000	0.000	0.860	0.860	0.860	
1.2111	0.0000	0.000	0.000	0.752	0.752	0.752	
2.2441	0.0000	0.000	0.000	0.777	0.777	0.777	
4.9854	0.0000	0.000	0.000	0.691	0.691	0.691	
8.0281	0.0000	0.000	0.000	0.498	0.498	0.498	
24.0808	0.0000	0.000	0.000	0.317	0.317	0.317	
720	0.0000	0.000	0.000	0.000	0.000	0.000	

Ref.

```
end_removal_rate_to_surface
frac_4_daughter_resusp_from_surface
Time      NobleGas Elemlodine          Orglodine Partlodine Solubles  Insolubles
720       1        0        0         0         0         0
end_frac_4_daughter_resusp_from_surface
end_control_volume

control_volume
obj_type                               OBJ_CV
name                                   SL2
air_volume                             82.4
water_volume                           0
surface_area                           0
has_recirc_filter                      false
removal_rate_to_surface
Time      NobleGas Elemlodine          Orglodine Partlodine Solubles  Insolubles
0.0435    0.0000   0.000    0.000     1.354     1.354     1.354
0.2929    0.0000   0.000    0.000     1.246     1.246     1.246
0.5623    0.0000   0.000    0.000     0.860     0.860     0.860
1.2111    0.0000   0.000    0.000     0.752     0.752     0.752
2.2441    0.0000   0.000    0.000     0.777     0.777     0.777
4.9854    0.0000   0.000    0.000     0.691     0.691     0.691
8.0281    0.0000   0.000    0.000     0.498     0.498     0.498
24.0808   0.0000   0.000    0.000     0.317     0.317     0.317
720       0.0000   0.000    0.000     0.000     0.000     0.000
end_removal_rate_to_surface
frac_4_daughter_resusp_from_surface
Time      NobleGas Elemlodine          Orglodine Partlodine Solubles  Insolubles
720       1        0        0         0         0         0
end_frac_4_daughter_resusp_from_surface
end_control_volume

control_volume
obj_type                               OBJ_CV
name                                   RB
air_volume                             1.06e+006
water_volume                           0
surface_area                           0
has_recirc_filter                      false
end_control_volume

control_volume
obj_type                               OBJ_CV
name                                   RB'
air_volume                             100
water_volume                           0
surface_area                           0
has_recirc_filter                      false
end_control_volume

control_volume
obj_type                               OBJ_CV
name                                   SP
air_volume                             7.97e+004
water_volume                           0
surface_area                           0
```

Ref.

```
has_recirc_filter                    false
end_control_volume

control_volume
obj_type                             OBJ_CV
name                                 Dummy
air_volume                           100
water_volume                         0
surface_area                         0
has_recirc_filter                    false
end_control_volume

control_volume
obj_type                             OBJ_CR
name                                 Control_Room
air_volume                           1.35e+005
water_volume                         0
surface_area                         0
has_recirc_filter                    false
breathing_rate
Time      (hr)      Value     (cms)
720                 0.00035
end_breathing_rate
occupancy_factor
Time      (hr)      Value     (frac)
24                  1
96                  0.6
720                 0.4
end_occupancy_factor
end_control_volume

junction
junction_type                        AIR_JUNCTION
downstream_location          AIR_SPACE
upstream                             CORE
downstream                           DW
has_filter                           false
flow_rate
Time      (hr)      Value     (cfm)
720                 1
end_flow_rate
end_junction

junction
junction_type                        AIR_JUNCTION
downstream_location          AIR_SPACE
upstream                             CORE
downstream                           SP
has_filter                           false
flow_rate
Time      (hr)      Value     (cfm)
720                 1
end_flow_rate
end_junction

junction
```

Ref.

```
junction_type                    AIR_JUNCTION
downstream_location              WATER_POOL
upstream                         DW
downstream                       WW
has_filter                       false
flow_rate
Time      (hr)      Value     (cfm)
2.033               0
720                 1.8e5
end_flow_rate
end_junction

junction
junction_type                    AIR_JUNCTION
downstream_location              AIR_SPACE
upstream                         WW
downstream                       DW
has_filter                       false
flow_rate
Time      (hr)      Value     (cfm)
2.033               0
720                 1.8e5
end_flow_rate
end_junction

junction
junction_type                    AIR_JUNCTION
downstream_location              AIR_SPACE
upstream                         DW
downstream                       SL1
has_filter                       true
flow_rate
Time      (hr)      Value     (cfm)
24                  0.342
720                 0.171
end_flow_rate
filter_efficiency
Time      NobleGas  Elemlodine          Orglodine  Partlodine Solubles   Insolubles
720       0         0.5       0         0.5        0.5        0.5
end_filter_efficiency
frac_4_daughter_resusp
Time      NobleGas  Elemlodine          Orglodine  Partlodine Solubles   Insolubles
720       1         0         0         0          0          0
end_frac_4_daughter_resusp
end_junction

junction
junction_type                    AIR_JUNCTION
downstream_location              AIR_SPACE
upstream                         SL1
downstream                       environment
has_filter                       false
flow_rate
Time      (hr)      Value     (cfm)
24                  0.398
720                 0.199
```

Ref.

```
end_flow_rate
X_over_Q_4_ctrl_room
Time      (hr)      Value     (s/m*3)
0.667               5.85e-4
2.667               1.03e-3
8.033               5.85e-4
24                  2.07e-4
96                  1.75e-4
720                 1.52e-4
end_X_over_Q_4_ctrl_room
X_over_Q_4_site_boundary
Time      (hr)      Value     (s/m*3)
0.667               0
2.667               1.90e-4
720                 0
end_X_over_Q_4_site_boundary
X_over_Q_4_low_population_zone
Time      (hr)      Value     (s/m*3)
8.033               1.63e-5
24                  1.10e-5
96                  4.67e-6
720                 1.37e-6
end_X_over_Q_4_low_population_zone
end_junction

junction
junction_type                 AIR_JUNCTION
downstream_location           AIR_SPACE
upstream                      DW
downstream                    SL2
has_filter                    true
flow_rate
Time      (hr)      Value     (cfm)
24                  0.342
720                 0.171
end_flow_rate
filter_efficiency
Time      NobleGas  Elemiodine          Orgiodine  Partiodine  Solubles   Insolubles
720       0         0.5       0         0.5        0.5         0.5
end_filter_efficiency
frac_4_daughter_resusp
Time      NobleGas  Elemiodine          Orgiodine  Partiodine  Solubles   Insolubles
720       1         0         0         0          0           0
end_frac_4_daughter_resusp
end_junction

junction
junction_type                 AIR_JUNCTION
downstream_location           AIR_SPACE
upstream                      SL2
downstream                    environment
has_filter                    false
flow_rate
Time      (hr)      Value     (cfm)
24                  0.398
720                 0.199
```

Ref.

```
end_flow_rate
X_over_Q_4_ctrl_room
Time      (hr)      Value     (s/m*3)
0.667               5.85e-4
2.667               1.03e-3
8.033               5.85e-4
24                  2.07e-4
96                  1.75e-4
720                 1.52e-4
end_X_over_Q_4_ctrl_room
X_over_Q_4_site_boundary
Time      (hr)      Value     (s/m*3)
0.667               0
2.667               1.90e-4
720                 0
end_X_over_Q_4_site_boundary
X_over_Q_4_low_population_zone
Time      (hr)      Value     (s/m*3)
8.033               1.63e-5
24                  1.10e-5
96                  4.67e-6
720                 1.37e-6
end_X_over_Q_4_low_population_zone
end_junction

junction
junction_type                 AIR_JUNCTION
downstream_location     AIR_SPACE
upstream                      DW
downstream                    environment
has_filter                    true
flow_rate
Time      (hr)      Value     (cfm)
24                  0.284
720                 0.142
end_flow_rate
filter_efficiency
Time      NobleGas  Elemiodine      Orgiodine Partiodine Solubles   Insolubles
720       0         0.5       0     0.5       0.5        0.5
end_filter_efficiency
frac_4_daughter_resusp
Time      NobleGas  Elemiodine      Orgiodine Partiodine Solubles   Insolubles
720       1         0         0     0         0          0
end_frac_4_daughter_resusp
X_over_Q_4_ctrl_room
Time      (hr)      Value     (s/m*3)
0.667               5.85e-4
2.667               1.03e-3
8.033               5.85e-4
24                  2.07e-4
96                  1.75e-4
720                 1.52e-4
end_X_over_Q_4_ctrl_room
X_over_Q_4_site_boundary
Time      (hr)      Value     (s/m*3)
0.667               0
```

Ref.

```
2.667           1.90e-4
720             0
end_X_over_Q_4_site_boundary
X_over_Q_4_low_population_zone
Time    (hr)    Value   (s/m*3)
8.033           1.63e-5
24              1.10e-5
96              4.67e-6
720             1.37e-6
end_X_over_Q_4_low_population_zone
end_junction

junction
junction_type                   AIR_JUNCTION
downstream_location     AIR_SPACE
upstream                DW
downstream                      Dummy
has_filter              false
flow_rate
Time    (hr)    Value   (cfm)
6               1.875
720             0.0
end_flow_rate
end_junction

junction
junction_type                   AIR_JUNCTION
downstream_location     AIR_SPACE
upstream                WW
downstream                      Dummy
has_filter              false
flow_rate
Time    (hr)    Value   (cfm)
6               1.25
720             0.0
end_flow_rate
end_junction

junction
junction_type                   AIR_JUNCTION
downstream_location     AIR_SPACE
upstream                        SP
downstream                      RB'
has_filter                      true
flow_rate
Time    (hr)    Value   (cfm)
6               2.67
720             0
end_flow_rate
filter_efficiency
Time    NobleGas Elemlodine     Orglodine Partlodine Solubles   Insolubles
720     0.5     0.0     0.0     1.0     0       0
end_filter_efficiency
end_junction

junction
```

Ref.

```
junction_type                    AIR_JUNCTION
downstream_location              AIR_SPACE
upstream                         RB'
downstream                       Dummy
has_filter                       false
flow_rate
Time      (hr)      Value     (cfm)
0.5                 1481
0.7                 918
1                   792
2.0333              474
4.1667              252
720                 0
end_flow_rate
end_junction

junction
junction_type                    AIR_JUNCTION
downstream_location              AIR_SPACE
upstream                         RB'
downstream                       Dummy
has_filter                       true
flow_rate
Time      (hr)      Value     (cfm)
0.5                 0
0.7                 495
1                   1761
2.0333              5253
6                   6710
720                 0
end_flow_rate
filter_efficiency
Time      NobleGas  Elemiodine        Orgiodine  Partiodine  Solubles   Insolubles
720       0         0.95      0.9     0.95       0.95        0.95
end_filter_efficiency
frac_4_daughter_resusp
Time      NobleGas  Elemiodine        Orgiodine  Partiodine  Solubles   Insolubles
720       1         1         0       0          0           0
end_frac_4_daughter_resusp
end_junction

junction
junction_type                    AIR_JUNCTION
downstream_location              AIR_SPACE
upstream                         DW
downstream                       RB
has_filter                       false
flow_rate
Time      (hr)      Value     (cfm)
6                   0
24                  1.875
720                 0.934
end_flow_rate
end_junction

junction
```

Ref.

```
junction_type                    AIR_JUNCTION
downstream_location              AIR_SPACE
upstream                         WW
downstream                       RB
has_filter                       false
flow_rate
Time      (hr)      Value     (cfm)
6                   0
24                  1.25
720                 0.625
end_flow_rate
end_junction

junction
junction_type                    AIR_JUNCTION
downstream_location              AIR_SPACE
upstream                         SP
downstream                       RB
has_filter                       true
flow_rate
Time      (hr)      Value     (cfm)
6                   0
720                 2.67
end_flow_rate
filter_efficiency
Time      NobleGas  Elemlodine        Orglodine  Partlodine Solubles   Insolubles
720       0.5       0.0       0.0     1.0        0          0
end_filter_efficiency
end_junction

junction
junction_type                    AIR_JUNCTION
downstream_location              AIR_SPACE
upstream                         RB
downstream                       Dummy
has_filter                       true
flow_rate
Time      (hr)      Value     (cfm)
720                 1600
end_flow_rate
filter_efficiency
Time      NobleGas  Elemlodine        Orglodine  Partlodine Solubles   Insolubles
6         0         0         0       0          0          0
720       0         0.95      0.9     0.95       0.95       0.95
end_filter_efficiency
frac_4_daughter_resusp
Time      NobleGas  Elemlodine        Orglodine  Partlodine Solubles   Insolubles
720       1         1         0       0          0          0
end_frac_4_daughter_resusp
end_junction

junction
junction_type                    AIR_JUNCTION
downstream_location              AIR_SPACE
upstream                         environment
downstream                       Control_Room
```

Ref.

```
has_filter                          true
flow_rate
Time    (hr)    Value   (cfm)
720     2025
end_flow_rate
filter_efficiency
Time    NobleGas Elemiodine         Orgiodine Partiodine Solubles  Insolubles
720     0        0.95     0.9       0.95      0.95      0.95
end_filter_efficiency
frac_4_daughter_resusp
Time    NobleGas Elemiodine         Orgiodine Partiodine Solubles  Insolubles
720     1        1        0         0         0         0
end_frac_4_daughter_resusp
end_junction

junction
junction_type                       AIR_JUNCTION
downstream_location         AIR_SPACE
upstream                            environment
downstream                          Control_Room
has_filter                          false
flow_rate
Time    (hr)    Value   (cfm)
720     100
end_flow_rate
end_junction

junction
junction_type                       AIR_JUNCTION
downstream_location         AIR_SPACE
upstream                            Control_Room
downstream                          environment
has_filter                          false
flow_rate
Time    (hr)    Value   (cfm)
720     2125
end_flow_rate
X_over_Q_4_ctrl_room
Time    (hr)    Value   (s/m*3)
720     0
end_X_over_Q_4_ctrl_room
X_over_Q_4_site_boundary
Time    (hr)    Value   (s/m*3)
720     0
end_X_over_Q_4_site_boundary
X_over_Q_4_low_population_zone
Time    (hr)    Value   (s/m*3)
720     0
end_X_over_Q_4_low_population_zone
end_junction

environment
breathing_rate_sb
Time    (hr)    Value   (cms)
8.033           0.00035
720             0.0
```

Ref.

end_breathing_rate_sb
breathing_rate_lpz

Time (hr)	Value (cms)
8.033	0.00035
24	0.00018
720	0.00023

end_breathing_rate_lpz
end_environment

Ref.

Appendix E2.5: INPUT.DAT File Case 1Ay (Temporary Bypass)

```
edit_time
0 0.417 0.667 0.917 1.167 1.417 1.667 1.917 2.033 2.167 2.417 2.667 2.917 3.167 3.667 4.167 6 8.033 24 48 96 240 720
end_edit_time

participating_isotopes
Kr83m  Kr85m  Kr85  Kr87  Kr88  Kr89
Xe131m Xe133m Xe133 Xe135m Xe135 Xe137 Xe138
I131Org I131Elem    I131Part
I132Org I132Elem    I132Part
I133Org I133Elem    I133Part
I134Org I134Elem    I134Part
I135Org I135Elem    I135Part
Rb86  Cs134  Cs136  Cs137
Sb127  Sb129  Te127m Te127  Te129m Te129  Te131m Te132
Ba137m Ba139  Ba140
Mo99  Tc99m  Ru103  Ru105  Ru106  Rh105
Y90  Y91  Y92  Y93  Zr95  Zr97  Nb95
La140  La141  La142  Pr143  Nd147  Am241  Cm242  Cm244
Ce141  Ce143  Ce144  Np239  Pu238  Pu239  Pu240  Pu241
Sr89  Sr90  Sr91  Sr92
end_participating_isotopes

core
thermal_power                    1887
elemental_iodine_frac            0.0485
organic_iodine_frac        0.0015
particulate_iodine_frac          0.95
release_frac
to_control_volume DW
Time N_Gas I_Grp CsGrp TeGrp BaGrp NMtls CeGrp LaGrp SrGrp
0.033    0       0       0       0       0       0       0       0       0
0.533    0.1     0.1     0.1     0       0       0       0       0       0
2.033    0.633   0.167   0.133   0.033   0.0133  0.00167 0.00033 0.00013 0.0133
720      0       0       0       0       0       0       0       0       0
end_to_control_volume
to_control_volume SP
Time N_Gas I_Grp CsGrp TeGrp BaGrp NMtls CeGrp LaGrp SrGrp
0.033    0       0       0       0       0       0       0       0       0
0.533    0       0.2     0       0       0       0       0       0       0
2.033    0       0.334   0       0       0       0       0       0       0
720      0       0       0       0       0       0       0       0       0
end_to_control_volume
end_release_frac
end_core

control_volume
obj_type                         OBJ_CV
name                             DW
air_volume                       1.8e+005
water_volume                     0
surface_area                     1
has_recirc_filter                false
```

Ref.

removal_rate_to_surface

Time	NobleGas	Elemiodine		Orgiodine	Partiodine	Solubles	Insolubles
0.0642	0.0000	20.000	0.000	52.895	52.895	52.895	
0.5297	0.0000	19.125	0.000	19.125	19.125	19.125	
0.5569	0.0000	20.000	0.000	31.616	31.616	31.616	
0.8337	0.0000	20.000	0.000	22.682	22.682	22.682	
2.0181	0.0000	19.849	0.000	19.849	19.849	19.849	
2.7602	0.0000	4.936	0.000	4.936	4.936	4.936	
4.3139	0.0000	2.975	0.000	2.975	2.975	2.975	
15.0234	0.0000	2.010	0.000	2.010	2.010	2.010	
720.0000	0.0000	0.000	0.000	0.000	0.000	0.000	

end_removal_rate_to_surface

frac_4_daughter_resusp_from_surface

Time	NobleGas	Elemiodine		Orgiodine	Partiodine	Solubles	Insolubles
720	1	0	0	0	0	0	

end_frac_4_daughter_resusp_from_surface

end_control_volume

control_volume

obj_type	OBJ_CV
name	WW
air_volume	1.2e+005
water_volume	7.97e+004
surface_area	0
has_recirc_filter	false

removal_rate_to_waterpool

Time	NobleGas	Elemiodine		Orgiodine	Partiodine	Solubles	Insolubles
720	0	0	0	0	0	0	

end_removal_rate_to_waterpool

frac_4_daughter_resusp_from_water

Time	NobleGas	Elemiodine		Orgiodine	Partiodine	Solubles	Insolubles
720	0	0	0	0	0	0	

end_frac_4_daughter_resusp_from_water

decontamination_factor

Time	NobleGas	Elemiodine		Orgiodine	Partiodine	Solubles	Insolubles
720	1	1	1	1	1	1	

end_decontamination_factor

end_control_volume

control_volume

obj_type	OBJ_CV
name	SL1
air_volume	82.4
water_volume	0
surface_area	0
has_recirc_filter	false

removal_rate_to_surface

Time	NobleGas	Elemiodine		Orgiodine	Partiodine	Solubles	Insolubles
0.0435	0.0000	0.000	0.000	1.354	1.354	1.354	
0.2929	0.0000	0.000	0.000	1.246	1.246	1.246	
0.5623	0.0000	0.000	0.000	0.860	0.860	0.860	
1.2111	0.0000	0.000	0.000	0.752	0.752	0.752	
2.2441	0.0000	0.000	0.000	0.777	0.777	0.777	
4.9854	0.0000	0.000	0.000	0.691	0.691	0.691	
8.0281	0.0000	0.000	0.000	0.498	0.498	0.498	
24.0808	0.0000	0.000	0.000	0.317	0.317	0.317	

Project: Nine Mile Point Nuclear Station Unit: __1_ Disposition: ____

Originator/Date	Reviewer/Date	Calculation No.	Revision
H. Pustulka 12/12/06	D. Leaver 12/12/06	H21C092	00

Ref.

```
720      0.0000   0.000    0.000    0.000    0.000    0.000
end_removal_rate_to_surface
frac_4_daughter_resusp_from_surface
Time     NobleGas Elemlodine        Orglodine Partlodine Solubles  Insolubles
720      1        0        0        0        0        0
end_frac_4_daughter_resusp_from_surface
end_control_volume

control_volume
obj_type                            OBJ_CV
name                                SL2
air_volume                          82.4
water_volume                        0
surface_area                        0
has_recirc_filter                   false
removal_rate_to_surface
Time     NobleGas Elemlodine        Orglodine Partlodine Solubles  Insolubles
0.0435   0.0000   0.000    0.000    1.354    1.354    1.354
0.2929   0.0000   0.000    0.000    1.246    1.246    1.246
0.5623   0.0000   0.000    0.000    0.860    0.860    0.860
1.2111   0.0000   0.000    0.000    0.752    0.752    0.752
2.2441   0.0000   0.000    0.000    0.777    0.777    0.777
4.9854   0.0000   0.000    0.000    0.691    0.691    0.691
8.0281   0.0000   0.000    0.000    0.498    0.498    0.498
24.0808  0.0000   0.000    0.000    0.317    0.317    0.317
720      0.0000   0.000    0.000    0.000    0.000    0.000
end_removal_rate_to_surface
frac_4_daughter_resusp_from_surface
Time     NobleGas Elemlodine        Orglodine Partlodine Solubles  Insolubles
720      1        0        0        0        0        0
end_frac_4_daughter_resusp_from_surface
end_control_volume

control_volume
obj_type                            OBJ_CV
name                                RB
air_volume                          1.06e+006
water_volume                        0
surface_area                        0
has_recirc_filter                   false
end_control_volume

control_volume
obj_type                            OBJ_CV
name                                RB'
air_volume                          100
water_volume                        0
surface_area                        0
has_recirc_filter                   false
end_control_volume

control_volume
obj_type                            OBJ_CV
name                                SP
air_volume                          7.97e+004
water_volume                        0
```

Ref.

```
surface_area                    0
has_recirc_filter               false
end_control_volume

control_volume
obj_type                        OBJ_CV
name                            Dummy
air_volume                      100
water_volume                    0
surface_area                    0
has_recirc_filter               false
end_control_volume

control_volume
obj_type                        OBJ_CR
name                            Control_Room
air_volume                      1.35e+005
water_volume                    0
surface_area                    0
has_recirc_filter               false
breathing_rate
Time      (hr)      Value     (cms)
720                 0.00035
end_breathing_rate
occupancy_factor
Time      (hr)      Value     (frac)
24                  1
96                  0.6
720                 0.4
end_occupancy_factor
end_control_volume

junction
junction_type                   AIR_JUNCTION
downstream_location             AIR_SPACE
upstream                        CORE
downstream                      DW
has_filter                      false
flow_rate
Time      (hr)      Value     (cfm)
720                 1
end_flow_rate
end_junction

junction
junction_type                   AIR_JUNCTION
downstream_location             AIR_SPACE
upstream                        CORE
downstream                      SP
has_filter                      false
flow_rate
Time      (hr)      Value     (cfm)
720                 1
end_flow_rate
end_junction
```

Ref.

```
junction
junction_type                    AIR_JUNCTION
downstream_location              WATER_POOL
upstream                         DW
downstream                       WW
has_filter                       false
flow_rate
Time      (hr)      Value     (cfm)
2.033               0
720                 1.8e5
end_flow_rate
end_junction

junction
junction_type                    AIR_JUNCTION
downstream_location              AIR_SPACE
upstream                         WW
downstream                       DW
has_filter                       false
flow_rate
Time      (hr)      Value     (cfm)
2.033               0
720                 1.8e5
end_flow_rate
end_junction

junction
junction_type                    AIR_JUNCTION
downstream_location              AIR_SPACE
upstream                         DW
downstream                       SL1
has_filter                       true
flow_rate
Time      (hr)      Value     (cfm)
24                  0.342
720                 0.171
end_flow_rate
filter_efficiency
Time      NobleGas  Elemiodine          Orgiodine  Partiodine Solubles   Insolubles
720       0         0.5       0         0.5        0.5        0.5
end_filter_efficiency
frac_4_daughter_resusp
Time      NobleGas  Elemiodine          Orgiodine  Partiodine Solubles   Insolubles
720       1         0         0         0          0          0
end_frac_4_daughter_resusp
end_junction

junction
junction_type                    AIR_JUNCTION
downstream_location              AIR_SPACE
upstream                         SL1
downstream                       Dummy
has_filter                       false
flow_rate
Time      (hr)      Value     (cfm)
24                  0.398
```

Ref.

```
720                 0.199
end_flow_rate
end_junction

junction
junction_type                   AIR_JUNCTION
downstream_location             AIR_SPACE
upstream                        DW
downstream                      SL2
has_filter                      true
flow_rate
Time    (hr)    Value   (cfm)
24              0.342
720             0.171
end_flow_rate
filter_efficiency
Time    NobleGas Elemlodine     Orglodine Partlodine Solubles  Insolubles
720     0       0.5     0       0.5       0.5        0.5
end_filter_efficiency
frac_4_daughter_resusp
Time    NobleGas Elemlodine     Orglodine Partlodine Solubles  Insolubles
720     1       0       0       0         0          0
end_frac_4_daughter_resusp
end_junction

junction
junction_type                   AIR_JUNCTION
downstream_location             AIR_SPACE
upstream                        SL2
downstream                      Dummy
has_filter                      false
flow_rate
Time    (hr)    Value   (cfm)
24              0.398
720             0.199
end_flow_rate
end_junction

junction
junction_type                   AIR_JUNCTION
downstream_location             AIR_SPACE
upstream                        DW
downstream                      Dummy
has_filter                      true
flow_rate
Time    (hr)    Value   (cfm)
24              0.284
720             0.142
end_flow_rate
filter_efficiency
Time    NobleGas Elemlodine     Orglodine Partlodine Solubles  Insolubles
720     0       0.5     0       0.5       0.5        0.5
end_filter_efficiency
frac_4_daughter_resusp
Time    NobleGas Elemlodine     Orglodine Partlodine Solubles  Insolubles
720     1       0       0       0         0          0
```

Ref.

```
end_frac_4_daughter_resusp
end_junction

junction
junction_type                    AIR_JUNCTION
downstream_location              AIR_SPACE
upstream                         DW
downstream                       environment
has_filter                       false
flow_rate
Time      (hr)      Value     (cfm)
6                   1.875
720                 0.0
end_flow_rate
X_over_Q_4_ctrl_room
Time      (hr)      Value     (s/m*3)
0.667               2.61e-4
2.667               4.82e-4
8.033               2.61e-4
24                  9.25e-5
96                  6.7e-5
720                 4.93e-5
end_X_over_Q_4_ctrl_room
X_over_Q_4_site_boundary
Time      (hr)      Value     (s/m*3)
0.667               0
2.667               1.90e-4
720                 0
end_X_over_Q_4_site_boundary
X_over_Q_4_low_population_zone
Time      (hr)      Value     (s/m*3)
8.033               1.63e-5
24                  1.10e-5
96                  4.67e-6
720                 1.37e-6
end_X_over_Q_4_low_population_zone
end_junction

junction
junction_type                    AIR_JUNCTION
downstream_location              AIR_SPACE
upstream                         WW
downstream                       environment
has_filter                       false
flow_rate
Time      (hr)      Value     (cfm)
6                   1.25
720                 0.0
end_flow_rate
X_over_Q_4_ctrl_room
Time      (hr)      Value     (s/m*3)
0.667               2.61e-4
2.667               4.82e-4
8.033               2.61e-4
24                  9.25e-5
96                  6.7e-5
```

Ref.

```
720                 4.93e-5
end_X_over_Q_4_ctrl_room
X_over_Q_4_site_boundary
Time    (hr)        Value   (s/m*3)
0.667               0
2.667               1.90e-4
720                 0
end_X_over_Q_4_site_boundary
X_over_Q_4_low_population_zone
Time    (hr)        Value   (s/m*3)
8.033               1.63e-5
24                  1.10e-5
96                  4.67e-6
720                 1.37e-6
end_X_over_Q_4_low_population_zone
end_junction

junction
junction_type                   AIR_JUNCTION
downstream_location     AIR_SPACE
upstream                        SP
downstream                      RB'
has_filter                      true
flow_rate
Time    (hr)        Value   (cfm)
6                   2.67
720                 0
end_flow_rate
filter_efficiency
Time    NobleGas Elemlodine     Orglodine Partlodine Solubles   Insolubles
720     0.5     0.0     0.0     1.0       0          0
end_filter_efficiency
end_junction

junction
junction_type                   AIR_JUNCTION
downstream_location     AIR_SPACE
upstream                        RB'
downstream                      environment
has_filter                      false
flow_rate
Time    (hr)        Value   (cfm)
0.5                 1481
0.7                 918
1                   792
2.0333              474
4.1667              252
720                 0
end_flow_rate
X_over_Q_4_ctrl_room
Time    (hr)        Value   (s/m*3)
0.667               2.61e-4
2.667               4.82e-4
8.033               2.61e-4
24                  9.25e-5
96                  6.7e-5
```

Ref.

```
720                 4.93e-5
end_X_over_Q_4_ctrl_room
X_over_Q_4_site_boundary
Time    (hr)    Value   (s/m*3)
0.667           0
2.667           1.90e-4
720             0
end_X_over_Q_4_site_boundary
X_over_Q_4_low_population_zone
Time    (hr)    Value   (s/m*3)
8.033           1.63e-5
24              1.10e-5
96              4.67e-6
720             1.37e-6
end_X_over_Q_4_low_population_zone
end_junction

junction
junction_type                   AIR_JUNCTION
downstream_location     AIR_SPACE
upstream                        RB'
downstream                      Dummy
has_filter                      true
flow_rate
Time    (hr)    Value   (cfm)
0.5             0
0.7             495
1               1761
2.0333          5253
6               6710
720             0
end_flow_rate
filter_efficiency
Time    NobleGas Elemlodine     Orglodine Partlodine Solubles   Insolubles
720     0       0.95    0.9     0.95    0.95    0.95
end_filter_efficiency
frac_4_daughter_resusp
Time    NobleGas Elemlodine     Orglodine Partlodine Solubles   Insolubles
720     1       1       0       0       0       0
end_frac_4_daughter_resusp
end_junction

junction
junction_type                   AIR_JUNCTION
downstream_location     AIR_SPACE
upstream                        DW
downstream                      RB
has_filter                      false
flow_rate
Time    (hr)    Value   (cfm)
6               0
24              1.875
720             0.934
end_flow_rate
end_junction
```

Ref.

```
junction
junction_type                    AIR_JUNCTION
downstream_location              AIR_SPACE
upstream                         WW
downstream                       RB
has_filter                       false
flow_rate
Time      (hr)      Value     (cfm)
6                   0
24                  1.25
720                 0.625
end_flow_rate
end_junction

junction
junction_type                    AIR_JUNCTION
downstream_location              AIR_SPACE
upstream                         SP
downstream                       RB
has_filter                       true
flow_rate
Time      (hr)      Value     (cfm)
6                   0
720                 2.67
end_flow_rate
filter_efficiency
Time      NobleGas  Elemlodine        Orglodine  Partlodine  Solubles   Insolubles
720       0.5       0.0       0.0     1.0        0           0
end_filter_efficiency
end_junction

junction
junction_type                    AIR_JUNCTION
downstream_location              AIR_SPACE
upstream                         RB
downstream                       Dummy
has_filter                       true
flow_rate
Time      (hr)      Value     (cfm)
720                 1600
end_flow_rate
filter_efficiency
Time      NobleGas  Elemlodine        Orglodine  Partlodine  Solubles   Insolubles
6         0         0         0       0          0           0
720       0         0.95      0.9     0.95       0.95        0.95
end_filter_efficiency
frac_4_daughter_resusp
Time      NobleGas  Elemlodine        Orglodine  Partlodine  Solubles   Insolubles
720       1         1         0       0          0           0
end_frac_4_daughter_resusp
end_junction

junction
junction_type                    AIR_JUNCTION
downstream_location              AIR_SPACE
upstream                         environment
```

Ref.

```
downstream                          Control_Room
has_filter                          true
flow_rate
Time    (hr)    Value   (cfm)
720     2025
end_flow_rate
filter_efficiency
Time    NobleGas Elemlodine         Orglodine Partlodine Solubles  Insolubles
720     0        0.95     0.9       0.95      0.95      0.95
end_filter_efficiency
frac_4_daughter_resusp
Time    NobleGas Elemlodine         Orglodine Partlodine Solubles  Insolubles
720     1        1        0         0         0         0
end_frac_4_daughter_resusp
end_junction

junction
junction_type                       AIR_JUNCTION
downstream_location         AIR_SPACE
upstream                            environment
downstream                          Control_Room
has_filter                          false
flow_rate
Time    (hr)    Value   (cfm)
720     100
end_flow_rate
end_junction

junction
junction_type                       AIR_JUNCTION
downstream_location         AIR_SPACE
upstream                            Control_Room
downstream                          environment
has_filter                          false
flow_rate
Time    (hr)    Value   (cfm)
720     2125
end_flow_rate
X_over_Q_4_ctrl_room
Time    (hr)    Value   (s/m*3)
720     0
end_X_over_Q_4_ctrl_room
X_over_Q_4_site_boundary
Time    (hr)    Value   (s/m*3)
720     0
end_X_over_Q_4_site_boundary
X_over_Q_4_low_population_zone
Time    (hr)    Value   (s/m*3)
720     0
end_X_over_Q_4_low_population_zone
end_junction

environment
breathing_rate_sb
Time    (hr)    Value   (cms)
8.033           0.00035
```

Project: Nine Mile Point Nuclear Station Unit: __1__ Disposition: ____

Originator/Date	Reviewer/Date	Calculation No.	Revision
H. Pustulka 12/12/06	D. Leaver 12/12/06	H21C092	00

Ref.

```
720                 0.0
end_breathing_rate_sb
breathing_rate_lpz
Time      (hr)      Value     (cms)
8.033               0.00035
24                  0.00018
720                 0.00023
end_breathing_rate_lpz
end_environment
```

Ref.

Appendix E2.6: INPUT.DAT File Case 1Az (Stack Release)

```
edit_time
0 0.417 0.667 0.917 1.167 1.417 1.667 1.917 2.033 2.167 2.417 2.667 2.917 3.167 3.667 4.167 6 8.033 24 48 96 240 720
end_edit_time

participating_isotopes
Kr83m  Kr85m  Kr85   Kr87   Kr88   Kr89
Xe131m Xe133m Xe133  Xe135m Xe135  Xe137  Xe138
I131Org I131Elem     I131Part
I132Org I132Elem     I132Part
I133Org I133Elem     I133Part
I134Org I134Elem     I134Part
I135Org I135Elem     I135Part
Rb86   Cs134  Cs136  Cs137
Sb127  Sb129  Te127m Te127  Te129m Te129  Te131m Te132
Ba137m Ba139  Ba140
Mo99   Tc99m  Ru103  Ru105  Ru106  Rh105
Y90    Y91    Y92    Y93    Zr95   Zr97   Nb95
La140  La141  La142  Pr143  Nd147  Am241  Cm242  Cm244
Ce141  Ce143  Ce144  Np239  Pu238  Pu239  Pu240  Pu241
Sr89   Sr90   Sr91   Sr92
end_participating_isotopes

core
thermal_power                    1887
elemental_iodine_frac            0.0485
organic_iodine_frac        0.0015
particulate_iodine_frac          0.95
release_frac
to_control_volume DW
Time N_Gas I_Grp CsGrp TeGrp BaGrp NMtls CeGrp LaGrp SrGrp
0.033    0      0      0      0      0      0      0      0      0
0.533    0.1    0.1    0.1    0      0      0      0      0      0
2.033    0.633  0.167  0.133  0.033  0.0133 0.00167 0.00033 0.00013 0.0133
720      0      0      0      0      0      0      0      0      0
end_to_control_volume
to_control_volume SP
Time N_Gas I_Grp CsGrp TeGrp BaGrp NMtls CeGrp LaGrp SrGrp
0.033    0      0      0      0      0      0      0      0      0
0.533    0      0.2    0      0      0      0      0      0      0
2.033    0      0.334  0      0      0      0      0      0      0
720      0      0      0      0      0      0      0      0      0
end_to_control_volume
end_release_frac
end_core

control_volume
obj_type                         OBJ_CV
name                             DW
air_volume                       1.8e+005
water_volume                     0
surface_area                     1
has_recirc_filter                false
```

Ref.

```
removal_rate_to_surface
Time      NobleGas Elemlodine          Orglodine Partlodine Solubles  Insolubles
0.0642    0.0000   20.000    0.000     52.895    52.895    52.895
0.5297    0.0000   19.125    0.000     19.125    19.125    19.125
0.5569    0.0000   20.000    0.000     31.616    31.616    31.616
0.8337    0.0000   20.000    0.000     22.682    22.682    22.682
2.0181    0.0000   19.849    0.000     19.849    19.849    19.849
2.7602    0.0000   4.936     0.000     4.936     4.936     4.936
4.3139    0.0000   2.975     0.000     2.975     2.975     2.975
15.0234   0.0000   2.010     0.000     2.010     2.010     2.010
720.0000  0.0000   0.000     0.000     0.000     0.000     0.000
end_removal_rate_to_surface
frac_4_daughter_resusp_from_surface
Time      NobleGas Elemlodine          Orglodine Partlodine Solubles  Insolubles
720       1        0         0        0         0         0
end_frac_4_daughter_resusp_from_surface
end_control_volume

control_volume
obj_type                               OBJ_CV
name                                   WW
air_volume                             1.2e+005
water_volume                           7.97e+004
surface_area                           0
has_recirc_filter                      false
removal_rate_to_waterpool
Time      NobleGas Elemlodine          Orglodine Partlodine Solubles  Insolubles
720       0        0         0        0         0         0
end_removal_rate_to_waterpool
frac_4_daughter_resusp_from_water
Time      NobleGas Elemlodine          Orglodine Partlodine Solubles  Insolubles
720       0        0         0        0         0         0
end_frac_4_daughter_resusp_from_water
decontamination_factor
Time      NobleGas Elemlodine          Orglodine Partlodine Solubles  Insolubles
720       1        1         1        1         1         1
end_decontamination_factor
end_control_volume

control_volume
obj_type                               OBJ_CV
name                                   SL1
air_volume                             82.4
water_volume                           0
surface_area                           0
has_recirc_filter                      false
removal_rate_to_surface
Time      NobleGas Elemlodine          Orglodine Partlodine Solubles  Insolubles
0.0435    0.0000   0.000     0.000     1.354     1.354     1.354
0.2929    0.0000   0.000     0.000     1.246     1.246     1.246
0.5623    0.0000   0.000     0.000     0.860     0.860     0.860
1.2111    0.0000   0.000     0.000     0.752     0.752     0.752
2.2441    0.0000   0.000     0.000     0.777     0.777     0.777
4.9854    0.0000   0.000     0.000     0.691     0.691     0.691
8.0281    0.0000   0.000     0.000     0.498     0.498     0.498
24.0808   0.0000   0.000     0.000     0.317     0.317     0.317
```

Ref.

```
720      0.0000   0.000    0.000    0.000    0.000    0.000
end_removal_rate_to_surface
frac_4_daughter_resusp_from_surface
Time     NobleGas Elemlodine        Orglodine Partlodine Solubles  Insolubles
720      1        0        0        0        0        0
end_frac_4_daughter_resusp_from_surface
end_control_volume

control_volume
obj_type                            OBJ_CV
name                                SL2
air_volume                          82.4
water_volume                        0
surface_area                        0
has_recirc_filter                   false
removal_rate_to_surface
Time     NobleGas Elemlodine        Orglodine Partlodine Solubles  Insolubles
0.0435   0.0000   0.000    0.000    1.354    1.354    1.354
0.2929   0.0000   0.000    0.000    1.246    1.246    1.246
0.5623   0.0000   0.000    0.000    0.860    0.860    0.860
1.2111   0.0000   0.000    0.000    0.752    0.752    0.752
2.2441   0.0000   0.000    0.000    0.777    0.777    0.777
4.9854   0.0000   0.000    0.000    0.691    0.691    0.691
8.0281   0.0000   0.000    0.000    0.498    0.498    0.498
24.0808  0.0000   0.000    0.000    0.317    0.317    0.317
720      0.0000   0.000    0.000    0.000    0.000    0.000
end_removal_rate_to_surface
frac_4_daughter_resusp_from_surface
Time     NobleGas Elemlodine        Orglodine Partlodine Solubles  Insolubles
720      1        0        0        0        0        0
end_frac_4_daughter_resusp_from_surface
end_control_volume

control_volume
obj_type                            OBJ_CV
name                                RB
air_volume                          1.06e+006
water_volume                        0
surface_area                        0
has_recirc_filter                   false
end_control_volume

control_volume
obj_type                            OBJ_CV
name                                RB'
air_volume                          100
water_volume                        0
surface_area                        0
has_recirc_filter                   false
end_control_volume

control_volume
obj_type                            OBJ_CV
name                                SP
air_volume                          7.97e+004
water_volume                        0
```

Ref.

```
surface_area                    0
has_recirc_filter               false
end_control_volume

control_volume
obj_type                        OBJ_CV
name                            Dummy
air_volume                      100
water_volume                    0
surface_area                    0
has_recirc_filter               false
end_control_volume

control_volume
obj_type                        OBJ_CR
name                            Control_Room
air_volume                      1.35e+005
water_volume                    0
surface_area                    0
has_recirc_filter               false
breathing_rate
Time      (hr)      Value     (cms)
720                 0.00035
end_breathing_rate
occupancy_factor
Time      (hr)      Value     (frac)
24                  1
96                  0.6
720                 0.4
end_occupancy_factor
end_control_volume

junction
junction_type                   AIR_JUNCTION
downstream_location             AIR_SPACE
upstream                        CORE
downstream                      DW
has_filter                      false
flow_rate
Time      (hr)      Value     (cfm)
720                 1
end_flow_rate
end_junction

junction
junction_type                   AIR_JUNCTION
downstream_location             AIR_SPACE
upstream                        CORE
downstream                      SP
has_filter                      false
flow_rate
Time      (hr)      Value     (cfm)
720                 1
end_flow_rate
end_junction
```

Ref.

```
junction
junction_type                    AIR_JUNCTION
downstream_location              WATER_POOL
upstream                         DW
downstream                       WW
has_filter                       false
flow_rate
Time      (hr)      Value     (cfm)
2.033               0
720                 1.8e5
end_flow_rate
end_junction

junction
junction_type                    AIR_JUNCTION
downstream_location              AIR_SPACE
upstream                         WW
downstream                       DW
has_filter                       false
flow_rate
Time      (hr)      Value     (cfm)
2.033               0
720                 1.8e5
end_flow_rate
end_junction

junction
junction_type                    AIR_JUNCTION
downstream_location              AIR_SPACE
upstream                         DW
downstream                       SL1
has_filter                       true
flow_rate
Time      (hr)      Value     (cfm)
24                  0.342
720                 0.171
end_flow_rate
filter_efficiency
Time      NobleGas  Elemlodine        Orglodine  Partlodine  Solubles   Insolubles
720       0         0.5       0       0.5        0.5         0.5
end_filter_efficiency
frac_4_daughter_resusp
Time      NobleGas  Elemlodine        Orglodine  Partlodine  Solubles   Insolubles
720       1         0         0       0          0           0
end_frac_4_daughter_resusp
end_junction

junction
junction_type                    AIR_JUNCTION
downstream_location              AIR_SPACE
upstream                         SL1
downstream                       Dummy
has_filter                       false
flow_rate
Time      (hr)      Value     (cfm)
24                  0.398
```

Ref.

```
720                 0.199
end_flow_rate
end_junction

junction
junction_type                   AIR_JUNCTION
downstream_location             AIR_SPACE
upstream                        DW
downstream                      SL2
has_filter                      true
flow_rate
Time    (hr)    Value   (cfm)
24              0.342
720             0.171
end_flow_rate
filter_efficiency
Time    NobleGas Elemiodine     Orgiodine Partiodine Solubles  Insolubles
720     0       0.5     0       0.5       0.5        0.5
end_filter_efficiency
frac_4_daughter_resusp
Time    NobleGas Elemiodine     Orgiodine Partiodine Solubles  Insolubles
720     1       0       0       0         0          0
end_frac_4_daughter_resusp
end_junction

junction
junction_type                   AIR_JUNCTION
downstream_location             AIR_SPACE
upstream                        SL2
downstream                      Dummy
has_filter                      false
flow_rate
Time    (hr)    Value   (cfm)
24              0.398
720             0.199
end_flow_rate
end_junction

junction
junction_type                   AIR_JUNCTION
downstream_location             AIR_SPACE
upstream                        DW
downstream                      Dummy
has_filter                      true
flow_rate
Time    (hr)    Value   (cfm)
24              0.284
720             0.142
end_flow_rate
filter_efficiency
Time    NobleGas Elemiodine     Orgiodine Partiodine Solubles  Insolubles
720     0       0.5     0       0.5       0.5        0.5
end_filter_efficiency
frac_4_daughter_resusp
Time    NobleGas Elemiodine     Orgiodine Partiodine Solubles  Insolubles
720     1       0       0       0         0          0
```

Ref.

```
end_frac_4_daughter_resusp
end_junction

junction
junction_type                   AIR_JUNCTION
downstream_location             AIR_SPACE
upstream                        DW
downstream                      Dummy
has_filter                      false
flow_rate
Time    (hr)    Value   (cfm)
6               1.875
720             0.0
end_flow_rate
end_junction

junction
junction_type                   AIR_JUNCTION
downstream_location             AIR_SPACE
upstream                        WW
downstream                      Dummy
has_filter                      false
flow_rate
Time    (hr)    Value   (cfm)
6               1.25
720             0.0
end_flow_rate
end_junction

junction
junction_type                   AIR_JUNCTION
downstream_location             AIR_SPACE
upstream                        SP
downstream                      RB'
has_filter                      true
flow_rate
Time    (hr)    Value   (cfm)
6               2.67
720             0
end_flow_rate
filter_efficiency
Time    NobleGas Elemlodine     Orglodine Partlodine Solubles   Insolubles
720     0.5     0.0     0.0     1.0       0          0
end_filter_efficiency
end_junction

junction
junction_type                   AIR_JUNCTION
downstream_location             AIR_SPACE
upstream                        RB'
downstream                      Dummy
has_filter                      false
flow_rate
Time    (hr)    Value   (cfm)
0.5             1481
0.7             918
```

Ref.

```
1                   792
2.0333              474
4.1667              252
720                 0
end_flow_rate
end_junction

junction
junction_type                   AIR_JUNCTION
downstream_location             AIR_SPACE
upstream                        RB'
downstream                      environment
has_filter                      true
flow_rate
Time    (hr)    Value   (cfm)
0.5             0
0.7             495
1               1761
2.0333          5253
6               6710
720             0
end_flow_rate
filter_efficiency
Time    NobleGas Elemiodine     Orgiodine Partiodine Solubles  Insolubles
720     0        0.95     0.9   0.95      0.95       0.95
end_filter_efficiency
frac_4_daughter_resusp
Time    NobleGas Elemiodine     Orgiodine Partiodine Solubles  Insolubles
720     1        1        0     0         0          0
end_frac_4_daughter_resusp
X_over_Q_4_ctrl_room
Time    (hr)    Value   (s/m*3)
0.667           1.26E-4
2.667           2.27E-4
8.033           1.26E-4
24              4.30E-5
96              3.58E-5
720             2.59E-5
end_X_over_Q_4_ctrl_room
X_over_Q_4_site_boundary
Time    (hr)    Value   (s/m*3)
0.667           0
2.667           5.98e-5
720             0
end_X_over_Q_4_site_boundary
X_over_Q_4_low_population_zone
Time    (hr)    Value   (s/m*3)
0.167           2.12e-5
4.167           1.26e-6
8.033           2.12e-5
24              8.40e-7
96              3.45e-7
720             1.11e-7
end_X_over_Q_4_low_population_zone
end_junction
```

Ref.

```
junction
junction_type                    AIR_JUNCTION
downstream_location              AIR_SPACE
upstream                         DW
downstream                       RB
has_filter                       false
flow_rate
Time      (hr)      Value     (cfm)
6                   0
24                  1.875
720                 0.934
end_flow_rate
end_junction

junction
junction_type                    AIR_JUNCTION
downstream_location              AIR_SPACE
upstream                         WW
downstream                       RB
has_filter                       false
flow_rate
Time      (hr)      Value     (cfm)
6                   0
24                  1.25
720                 0.625
end_flow_rate
end_junction

junction
junction_type                    AIR_JUNCTION
downstream_location              AIR_SPACE
upstream                         SP
downstream                       RB
has_filter                       true
flow_rate
Time      (hr)      Value     (cfm)
6                   0
720                 2.67
end_flow_rate
filter_efficiency
Time      NobleGas  Elemlodine          Orglodine  Partlodine  Solubles   Insolubles
720       0.5       0.0       0.0       1.0        0           0
end_filter_efficiency
end_junction

junction
junction_type                    AIR_JUNCTION
downstream_location              AIR_SPACE
upstream                         RB
downstream                       environment
has_filter                       true
flow_rate
Time      (hr)      Value     (cfm)
720                 1600
end_flow_rate
filter_efficiency
```

Ref.

```
Time      NobleGas Elemlodine          Orglodine Partlodine Solubles  Insolubles
6         0        0        0         0         0         0
720       0        0.95     0.9       0.95      0.95      0.95
end_filter_efficiency
frac_4_daughter_resusp
Time      NobleGas Elemlodine          Orglodine Partlodine Solubles  Insolubles
720       1        1        0         0         0         0
end_frac_4_daughter_resusp
X_over_Q_4_ctrl_room
Time      (hr)     Value    (s/m*3)
0.667              1.26E-4
2.667              2.27E-4
8.033              1.26E-4
24                 4.30E-5
96                 3.58E-5
720                2.59E-5
end_X_over_Q_4_ctrl_room
X_over_Q_4_site_boundary
Time      (hr)     Value    (s/m*3)
0.667              0
2.667              5.98e-5
720                0
end_X_over_Q_4_site_boundary
X_over_Q_4_low_population_zone
Time      (hr)     Value    (s/m*3)
0.167              2.12e-5
4.167              1.26e-6
8.033              2.12e-5
24                 8.40e-7
96                 3.45e-7
720                1.11e-7
end_X_over_Q_4_low_population_zone
end_junction

junction
junction_type                AIR_JUNCTION
downstream_location          AIR_SPACE
upstream                     environment
downstream                   Control_Room
has_filter                   true
flow_rate
Time      (hr)     Value    (cfm)
720       2025
end_flow_rate
filter_efficiency
Time      NobleGas Elemlodine          Orglodine Partlodine Solubles  Insolubles
720       0        0.95     0.9       0.95      0.95      0.95
end_filter_efficiency
frac_4_daughter_resusp
Time      NobleGas Elemlodine          Orglodine Partlodine Solubles  Insolubles
720       1        1        0         0         0         0
end_frac_4_daughter_resusp
end_junction

junction
junction_type                AIR_JUNCTION
```

Ref.

```
downstream_location        AIR_SPACE
upstream                           environment
downstream                         Control_Room
has_filter                         false
flow_rate
Time     (hr)     Value     (cfm)
720      100
end_flow_rate
end_junction

junction
junction_type                      AIR_JUNCTION
downstream_location        AIR_SPACE
upstream                           Control_Room
downstream                         environment
has_filter                         false
flow_rate
Time     (hr)     Value     (cfm)
720      2125
end_flow_rate
X_over_Q_4_ctrl_room
Time     (hr)     Value     (s/m*3)
720      0
end_X_over_Q_4_ctrl_room
X_over_Q_4_site_boundary
Time     (hr)     Value     (s/m*3)
720      0
end_X_over_Q_4_site_boundary
X_over_Q_4_low_population_zone
Time     (hr)     Value     (s/m*3)
720      0
end_X_over_Q_4_low_population_zone
end_junction

environment
breathing_rate_sb
Time     (hr)     Value     (cms)
8.033             0.00035
720               0.0
end_breathing_rate_sb
breathing_rate_lpz
Time     (hr)     Value     (cms)
8.033             0.00035
24                0.00018
720               0.00023
end_breathing_rate_lpz
end_environment
```

Ref.

Appendix E2.7: INPUT.DAT File Case 1A_filter

```
edit_time
0 0.417 0.667 0.917 1.167 1.417 1.667 1.917 2.033 2.167 2.417 2.667 2.917 3.167 3.667 4.167 6 8.033 24 48 96 240 720
end_edit_time

participating_isotopes
Kr83m  Kr85m  Kr85   Kr87   Kr88   Kr89
Xe131m Xe133m Xe133  Xe135m Xe135  Xe137  Xe138
I131Org I131Elem     I131Part
I132Org I132Elem     I132Part
I133Org I133Elem     I133Part
I134Org I134Elem     I134Part
I135Org I135Elem     I135Part
Rb86   Cs134  Cs136  Cs137
Sb127  Sb129  Te127m Te127  Te129m Te129  Te131m Te132
Ba137m Ba139  Ba140
Mo99   Tc99m  Ru103  Ru105  Ru106  Rh105
Y90    Y91    Y92    Y93    Zr95   Zr97   Nb95
La140  La141  La142  Pr143  Nd147  Am241  Cm242  Cm244
Ce141  Ce143  Ce144  Np239  Pu238  Pu239  Pu240  Pu241
Sr89   Sr90   Sr91   Sr92
end_participating_isotopes

core
thermal_power                    1887
elemental_iodine_frac            0.0485
organic_iodine_frac        0.0015
particulate_iodine_frac          0.95
release_frac
to_control_volume DW
Time N_Gas I_Grp CsGrp TeGrp BaGrp NMtls CeGrp LaGrp SrGrp
0.033   0       0       0       0       0       0       0       0       0
0.533   0.1     0.1     0.1     0       0       0       0       0       0
2.033   0.633   0.167   0.133   0.033   0.0133  0.00167 0.00033 0.00013 0.0133
720     0       0       0       0       0       0       0       0       0
end_to_control_volume
to_control_volume SP
Time N_Gas I_Grp CsGrp TeGrp BaGrp NMtls CeGrp LaGrp SrGrp
0.033   0       0       0       0       0       0       0       0       0
0.533   0       0.2     0       0       0       0       0       0       0
2.033   0       0.334   0       0       0       0       0       0       0
720     0       0       0       0       0       0       0       0       0
end_to_control_volume
end_release_frac
end_core

control_volume
obj_type                         OBJ_CV
name                             DW
air_volume                       1.8e+005
water_volume                     0
surface_area                     1
has_recirc_filter                false
removal_rate_to_surface
```

Ref.

Time	NobleGas	Elemlodine		Orglodine	Partlodine	Solubles	Insolubles
0.0642	0.0000	20.000	0.000	52.895	52.895	52.895	
0.5297	0.0000	19.125	0.000	19.125	19.125	19.125	
0.5569	0.0000	20.000	0.000	31.616	31.616	31.616	
0.8337	0.0000	20.000	0.000	22.682	22.682	22.682	
2.0181	0.0000	19.849	0.000	19.849	19.849	19.849	
2.7602	0.0000	4.936	0.000	4.936	4.936	4.936	
4.3139	0.0000	2.975	0.000	2.975	2.975	2.975	
15.0234	0.0000	2.010	0.000	2.010	2.010	2.010	
720.0000	0.0000	0.000	0.000	0.000	0.000	0.000	

end_removal_rate_to_surface
frac_4_daughter_resusp_from_surface

Time	NobleGas	Elemlodine		Orglodine	Partlodine	Solubles	Insolubles
720	1	0	0	0	0	0	

end_frac_4_daughter_resusp_from_surface
end_control_volume

control_volume

obj_type	OBJ_CV
name	WW
air_volume	1.2e+005
water_volume	7.97e+004
surface_area	0
has_recirc_filter	false

removal_rate_to_waterpool

Time	NobleGas	Elemlodine		Orglodine	Partlodine	Solubles	Insolubles
720	0	0	0	0	0	0	

end_removal_rate_to_waterpool
frac_4_daughter_resusp_from_water

Time	NobleGas	Elemlodine		Orglodine	Partlodine	Solubles	Insolubles
720	0	0	0	0	0	0	

end_frac_4_daughter_resusp_from_water
decontamination_factor

Time	NobleGas	Elemlodine		Orglodine	Partlodine	Solubles	Insolubles
720	1	1	1	1	1	1	

end_decontamination_factor
end_control_volume

control_volume

obj_type	OBJ_CV
name	SL1
air_volume	82.4
water_volume	0
surface_area	0
has_recirc_filter	false

removal_rate_to_surface

Time	NobleGas	Elemlodine		Orglodine	Partlodine	Solubles	Insolubles
0.0435	0.0000	0.000	0.000	1.354	1.354	1.354	
0.2929	0.0000	0.000	0.000	1.246	1.246	1.246	
0.5623	0.0000	0.000	0.000	0.860	0.860	0.860	
1.2111	0.0000	0.000	0.000	0.752	0.752	0.752	
2.2441	0.0000	0.000	0.000	0.777	0.777	0.777	
4.9854	0.0000	0.000	0.000	0.691	0.691	0.691	
8.0281	0.0000	0.000	0.000	0.498	0.498	0.498	
24.0808	0.0000	0.000	0.000	0.317	0.317	0.317	
720	0.0000	0.000	0.000	0.000	0.000	0.000	

Ref.

```
end_removal_rate_to_surface
frac_4_daughter_resusp_from_surface
Time      NobleGas Elemlodine          Orglodine Partlodine Solubles  Insolubles
720       1        0        0         0         0         0
end_frac_4_daughter_resusp_from_surface
end_control_volume

control_volume
obj_type                               OBJ_CV
name                                   SL2
air_volume                             82.4
water_volume                           0
surface_area                           0
has_recirc_filter                      false
removal_rate_to_surface
Time      NobleGas Elemlodine          Orglodine Partlodine Solubles  Insolubles
0.0435    0.0000   0.000    0.000     1.354     1.354     1.354
0.2929    0.0000   0.000    0.000     1.246     1.246     1.246
0.5623    0.0000   0.000    0.000     0.860     0.860     0.860
1.2111    0.0000   0.000    0.000     0.752     0.752     0.752
2.2441    0.0000   0.000    0.000     0.777     0.777     0.777
4.9854    0.0000   0.000    0.000     0.691     0.691     0.691
8.0281    0.0000   0.000    0.000     0.498     0.498     0.498
24.0808   0.0000   0.000    0.000     0.317     0.317     0.317
720       0.0000   0.000    0.000     0.000     0.000     0.000
end_removal_rate_to_surface
frac_4_daughter_resusp_from_surface
Time      NobleGas Elemlodine          Orglodine Partlodine Solubles  Insolubles
720       1        0        0         0         0         0
end_frac_4_daughter_resusp_from_surface
end_control_volume

control_volume
obj_type                               OBJ_CV
name                                   RB
air_volume                             1.06e+006
water_volume                           0
surface_area                           0
has_recirc_filter                      false
end_control_volume

control_volume
obj_type                               OBJ_CV
name                                   RB'
air_volume                             100
water_volume                           0
surface_area                           0
has_recirc_filter                      false
end_control_volume

control_volume
obj_type                               OBJ_CV
name                                   SP
air_volume                             7.97e+004
water_volume                           0
surface_area                           0
```

Ref.

```
has_recirc_filter                false
end_control_volume

control_volume
obj_type                         OBJ_CR
name                             Control_Room
air_volume                       1.35e+005
water_volume                     0
surface_area                     0
has_recirc_filter                false
breathing_rate
Time      (hr)      Value     (cms)
720                 0.00035
end_breathing_rate
occupancy_factor
Time      (hr)      Value     (frac)
24                  1
96                  0.6
720                 0.4
end_occupancy_factor
end_control_volume


junction
junction_type                    AIR_JUNCTION
downstream_location         AIR_SPACE
upstream                         CORE
downstream                       DW
has_filter                       false
flow_rate
Time      (hr)      Value     (cfm)
720                 1
end_flow_rate
end_junction

junction
junction_type                    AIR_JUNCTION
downstream_location         AIR_SPACE
upstream                         CORE
downstream                       SP
has_filter                       false
flow_rate
Time      (hr)      Value     (cfm)
720                 1
end_flow_rate
end_junction

junction
junction_type                    AIR_JUNCTION
downstream_location         WATER_POOL
upstream                         DW
downstream                       WW
has_filter                       false
flow_rate
Time      (hr)      Value     (cfm)
2.033               0
```

Ref.

```
720                 1.8e5
end_flow_rate
end_junction

junction
junction_type                   AIR_JUNCTION
downstream_location             AIR_SPACE
upstream                        WW
downstream                      DW
has_filter                      false
flow_rate
Time    (hr)    Value   (cfm)
2.033           0
720             1.8e5
end_flow_rate
end_junction

junction
junction_type                   AIR_JUNCTION
downstream_location             AIR_SPACE
upstream                        DW
downstream                      SL1
has_filter                      true
flow_rate
Time    (hr)    Value   (cfm)
24              0.342
720             0.171
end_flow_rate
filter_efficiency
Time    NobleGas Elemlodine     Orglodine Partlodine Solubles  Insolubles
720     0        0.5     0      0.5       0.5        0.5
end_filter_efficiency
frac_4_daughter_resusp
Time    NobleGas Elemlodine     Orglodine Partlodine Solubles  Insolubles
720     1        0       0      0         0          0
end_frac_4_daughter_resusp
end_junction

junction
junction_type                   AIR_JUNCTION
downstream_location             AIR_SPACE
upstream                        SL1
downstream                      environment
has_filter                      false
flow_rate
Time    (hr)    Value   (cfm)
24              0.398
720             0.199
end_flow_rate
X_over_Q_4_ctrl_room
Time    (hr)    Value   (s/m*3)
0.667           5.85e-4
2.667           1.03e-3
8.033           5.85e-4
24              2.07e-4
96              1.75e-4
```

Ref.

```
720                 1.52e-4
end_X_over_Q_4_ctrl_room
X_over_Q_4_site_boundary
Time    (hr)    Value   (s/m*3)
0.667           0
2.667           1.90e-4
720             0
end_X_over_Q_4_site_boundary
X_over_Q_4_low_population_zone
Time    (hr)    Value   (s/m*3)
8.033           1.63e-5
24              1.10e-5
96              4.67e-6
720             1.37e-6
end_X_over_Q_4_low_population_zone
end_junction

junction
junction_type                   AIR_JUNCTION
downstream_location     AIR_SPACE
upstream                        DW
downstream                      SL2
has_filter                      true
flow_rate
Time    (hr)    Value   (cfm)
24              0.342
720             0.171
end_flow_rate
filter_efficiency
Time    NobleGas Elemlodine     Orglodine Partlodine Solubles   Insolubles
720     0       0.5     0       0.5     0.5     0.5
end_filter_efficiency
frac_4_daughter_resusp
Time    NobleGas Elemlodine     Orglodine Partlodine Solubles   Insolubles
720     1       0       0       0       0       0
end_frac_4_daughter_resusp
end_junction

junction
junction_type                   AIR_JUNCTION
downstream_location     AIR_SPACE
upstream                        SL2
downstream                      environment
has_filter                      false
flow_rate
Time    (hr)    Value   (cfm)
24              0.398
720             0.199
end_flow_rate
X_over_Q_4_ctrl_room
Time    (hr)    Value   (s/m*3)
0.667           5.85e-4
2.667           1.03e-3
8.033           5.85e-4
24              2.07e-4
96              1.75e-4
```

Ref.

```
720                 1.52e-4
end_X_over_Q_4_ctrl_room
X_over_Q_4_site_boundary
Time      (hr)      Value     (s/m*3)
0.667               0
2.667               1.90e-4
720                 0
end_X_over_Q_4_site_boundary
X_over_Q_4_low_population_zone
Time      (hr)      Value     (s/m*3)
8.033               1.63e-5
24                  1.10e-5
96                  4.67e-6
720                 1.37e-6
end_X_over_Q_4_low_population_zone
end_junction

junction
junction_type                   AIR_JUNCTION
downstream_location             AIR_SPACE
upstream                        DW
downstream                      environment
has_filter                      true
flow_rate
Time      (hr)      Value     (cfm)
6                   2.159
24                  0.284
720                 0.142
end_flow_rate
filter_efficiency
Time      NobleGas  Elemlodine          Orglodine Partlodine Solubles  Insolubles
6         0         0.066     0         0.066     0.066      0.066
720       0         0.5       0         0.5       0.5        0.5
end_filter_efficiency
frac_4_daughter_resusp
Time      NobleGas  Elemlodine          Orglodine Partlodine Solubles  Insolubles
720       1         0         0         0         0          0
end_frac_4_daughter_resusp
X_over_Q_4_ctrl_room
Time      (hr)      Value     (s/m*3)
0.667               3.04e-4
2.667               5.54e-4
6                   3.04e-4
8.033               5.85e-4
24                  2.07e-4
96                  1.75e-4
720                 1.52e-4
end_X_over_Q_4_ctrl_room
X_over_Q_4_site_boundary
Time      (hr)      Value     (s/m*3)
0.667               0
2.667               1.90e-4
720                 0
end_X_over_Q_4_site_boundary
X_over_Q_4_low_population_zone
Time      (hr)      Value     (s/m*3)
```

Ref.

```
8.033          1.63e-5
24             1.10e-5
96             4.67e-6
720            1.37e-6
end_X_over_Q_4_low_population_zone
end_junction

junction
junction_type                  AIR_JUNCTION
downstream_location            AIR_SPACE
upstream                       WW
downstream                     environment
has_filter                     false
flow_rate
Time     (hr)     Value     (cfm)
6                 1.25
720               0.0
end_flow_rate
X_over_Q_4_ctrl_room
Time     (hr)     Value     (s/m*3)
0.667             2.61e-4
2.667             4.82e-4
8.033             2.61e-4
24                9.25e-5
96                6.7e-5
720               4.93e-5
end_X_over_Q_4_ctrl_room
X_over_Q_4_site_boundary
Time     (hr)     Value     (s/m*3)
0.667             0
2.667             1.90e-4
720               0
end_X_over_Q_4_site_boundary
X_over_Q_4_low_population_zone
Time     (hr)     Value     (s/m*3)
8.033             1.63e-5
24                1.10e-5
96                4.67e-6
720               1.37e-6
end_X_over_Q_4_low_population_zone
end_junction

junction
junction_type                  AIR_JUNCTION
downstream_location            AIR_SPACE
upstream                       SP
downstream                     RB'
has_filter                     true
flow_rate
Time     (hr)     Value     (cfm)
6                 2.67
720               0
end_flow_rate
filter_efficiency
Time     NobleGas Elemlodine        Orglodine Partlodine Solubles  Insolubles
720      0.5      0.0      0.0      1.0       0          0
```

Ref.

```
end_filter_efficiency
end_junction

junction
junction_type                    AIR_JUNCTION
downstream_location              AIR_SPACE
upstream                         RB'
downstream                       environment
has_filter                       false
flow_rate
Time      (hr)      Value     (cfm)
0.5                 1481
0.7                 918
1                   792
2.0333              474
4.1667              252
720                 0
end_flow_rate
X_over_Q_4_ctrl_room
Time      (hr)      Value     (s/m*3)
0.667               2.61e-4
2.667               4.82e-4
8                   2.61e-4
24                  9.25e-5
96                  6.7e-5
720                 4.93e-5
end_X_over_Q_4_ctrl_room
X_over_Q_4_site_boundary
Time      (hr)      Value     (s/m*3)
0.667               0
2.667               1.90e-4
720                 0
end_X_over_Q_4_site_boundary
X_over_Q_4_low_population_zone
Time      (hr)      Value     (s/m*3)
8.033               1.63e-5
24                  1.10e-5
96                  4.67e-6
720                 1.37e-6
end_X_over_Q_4_low_population_zone
end_junction

junction
junction_type                    AIR_JUNCTION
downstream_location              AIR_SPACE
upstream                         RB'
downstream                       environment
has_filter                       true
flow_rate
Time      (hr)      Value     (cfm)
0.5                 0
0.7                 495
1                   1761
2.0333              5253
6                   6710
720                 0
```

Ref.

```
end_flow_rate
filter_efficiency
Time      NobleGas  Elemlodine        Orglodine  Partlodine  Solubles   Insolubles
720       0         0.95      0.9     0.95       0.95        0.95
end_filter_efficiency
frac_4_daughter_resusp
Time      NobleGas  Elemlodine        Orglodine  Partlodine  Solubles   Insolubles
720       1         1         0       0          0           0
end_frac_4_daughter_resusp
X_over_Q_4_ctrl_room
Time      (hr)      Value     (s/m*3)
0.667               1.26E-4
2.667               2.27E-4
8.033               1.26E-4
24                  4.30E-5
96                  3.58E-5
720                 2.59E-5
end_X_over_Q_4_ctrl_room
X_over_Q_4_site_boundary
Time      (hr)      Value     (s/m*3)
0.667               0
2.667               5.98e-5
720                 0
end_X_over_Q_4_site_boundary
X_over_Q_4_low_population_zone
Time      (hr)      Value     (s/m*3)
0.167               2.12e-5
4.167               1.26e-6
8.033               2.12e-5
24                  8.40e-7
96                  3.45e-7
720                 1.11e-7
end_X_over_Q_4_low_population_zone
end_junction

junction
junction_type                 AIR_JUNCTION
downstream_location           AIR_SPACE
upstream                      DW
downstream                    RB
has_filter                    false
flow_rate
Time      (hr)      Value     (cfm)
6                   0
24                  1.875
720                 0.934
end_flow_rate
end_junction

junction
junction_type                 AIR_JUNCTION
downstream_location           AIR_SPACE
upstream                      WW
downstream                    RB
has_filter                    false
flow_rate
```

Ref.

```
Time      (hr)      Value     (cfm)
6                   0
24                  1.25
720                 0.625
end_flow_rate
end_junction

junction
junction_type                         AIR_JUNCTION
downstream_location         AIR_SPACE
upstream                              SP
downstream                            RB
has_filter                            true
flow_rate
Time      (hr)      Value     (cfm)
6                   0
720                 2.67
end_flow_rate
filter_efficiency
Time      NobleGas  Elemlodine        Orglodine Partlodine Solubles  Insolubles
720       0.5       0.0       0.0     1.0       0          0
end_filter_efficiency
end_junction

junction
junction_type                         AIR_JUNCTION
downstream_location         AIR_SPACE
upstream                              RB
downstream                            environment
has_filter                            true
flow_rate
Time      (hr)      Value     (cfm)
720                 1600
end_flow_rate
filter_efficiency
Time      NobleGas  Elemlodine        Orglodine Partlodine Solubles  Insolubles
6         0         0         0       0         0          0
720       0         0.95      0.9     0.95      0.95       0.95
end_filter_efficiency
frac_4_daughter_resusp
Time      NobleGas  Elemlodine        Orglodine Partlodine Solubles  Insolubles
720       1         1         0       0         0          0
end_frac_4_daughter_resusp
X_over_Q_4_ctrl_room
Time      (hr)      Value     (s/m*3)
0.667               1.26E-4
2.667               2.27E-4
8.033               1.26E-4
24                  4.30E-5
96                  3.58E-5
720                 2.59E-5
end_X_over_Q_4_ctrl_room
X_over_Q_4_site_boundary
Time      (hr)      Value     (s/m*3)
0.667               0
2.667               5.98e-5
```

Ref.

```
720                 0
end_X_over_Q_4_site_boundary
X_over_Q_4_low_population_zone
Time    (hr)    Value   (s/m*3)
0.167           2.12e-5
4.167           1.26e-6
8.033           2.12e-5
24              8.40e-7
96              3.45e-7
720             1.11e-7
end_X_over_Q_4_low_population_zone
end_junction

junction
junction_type                   AIR_JUNCTION
downstream_location     AIR_SPACE
upstream                        environment
downstream                      Control_Room
has_filter                      true
flow_rate
Time    (hr)    Value   (cfm)
720     2025
end_flow_rate
filter_efficiency
Time    NobleGas Elemlodine     Orglodine Partlodine Solubles   Insolubles
720     1       0       0       0       0       0
end_filter_efficiency
frac_4_daughter_resusp
Time    NobleGas Elemlodine     Orglodine Partlodine Solubles   Insolubles
720     1       1       0       0       0       0
end_frac_4_daughter_resusp
end_junction

junction
junction_type                   AIR_JUNCTION
downstream_location     AIR_SPACE
upstream                        environment
downstream                      Control_Room
has_filter                      false
flow_rate
Time    (hr)    Value   (cfm)
720     0
end_flow_rate
end_junction

junction
junction_type                   AIR_JUNCTION
downstream_location     AIR_SPACE
upstream                        Control_Room
downstream                      environment
has_filter                      false
flow_rate
Time    (hr)    Value   (cfm)
720     0
end_flow_rate
X_over_Q_4_ctrl_room
```

Ref.

```
Time      (hr)      Value     (s/m*3)
720       0
end_X_over_Q_4_ctrl_room
X_over_Q_4_site_boundary
Time      (hr)      Value     (s/m*3)
720       0
end_X_over_Q_4_site_boundary
X_over_Q_4_low_population_zone
Time      (hr)      Value     (s/m*3)
720       0
end_X_over_Q_4_low_population_zone
end_junction

environment
breathing_rate_sb
Time      (hr)      Value     (cms)
8.033               0.00035
720                 0.0
end_breathing_rate_sb
breathing_rate_lpz
Time      (hr)      Value     (cms)
8.033               0.00035
24                  0.00018
720                 0.00023
end_breathing_rate_lpz
end_environment
```

Ref.

Appendix E3: RESULTS.OUT Files Excerpts for Case 1A (LIMITING CASE: Core Spray Division Electrical Failure)

Appendix E3.1: RESULTS.OUT File Case 1A' (Worst 2 hr Determination)

```
edit time 0.000000

environment

            thyroid    wbody      skin       CEDE
EAB dose:   0.00E+000  0.00E+000  0.00E+000  0.00E+000
LPZ dose:   0.00E+000  0.00E+000  0.00E+000  0.00E+000


edit time 0.417000


environment

            thyroid    wbody      skin       CEDE
EAB dose:   0.00E+000  9.28E-002  0.00E+000  5.00E-001
LPZ dose:   0.00E+000  7.96E-003  0.00E+000  4.29E-002


edit time 0.667000

environment

            thyroid    wbody      skin       CEDE
EAB dose:   0.00E+000  2.16E-001  0.00E+000  1.07E+000
LPZ dose:   0.00E+000  1.85E-002  0.00E+000  9.20E-002

edit time 0.917000

environment

            thyroid    wbody      skin       CEDE
EAB dose:   0.00E+000  4.36E-001  0.00E+000  1.71E+000
LPZ dose:   0.00E+000  3.73E-002  0.00E+000  1.46E-001

edit time 1.167000

environment

            thyroid    wbody      skin       CEDE
EAB dose:   0.00E+000  7.36E-001  0.00E+000  2.30E+000
LPZ dose:   0.00E+000  6.29E-002  0.00E+000  1.96E-001
```

Ref.

```
edit time 1.417000

environment

            thyroid    wbody      skin       CEDE
EAB dose:   0.00E+000  1.11E+000  0.00E+000  2.86E+000
LPZ dose:   0.00E+000  9.47E-002  0.00E+000  2.43E-001


edit time 1.667000

environment

            thyroid    wbody      skin       CEDE
EAB dose:   0.00E+000  1.55E+000  0.00E+000  3.47E+000
LPZ dose:   0.00E+000  1.32E-001  0.00E+000  2.93E-001


edit time 1.917000

environment

            thyroid    wbody      skin       CEDE
EAB dose:   0.00E+000  2.05E+000  0.00E+000  4.10E+000
LPZ dose:   0.00E+000  1.75E-001  0.00E+000  3.46E-001

edit time 2.033000

environment

            thyroid    wbody      skin       CEDE
EAB dose:   0.00E+000  2.31E+000  0.00E+000  4.42E+000
LPZ dose:   0.00E+000  1.97E-001  0.00E+000  3.71E-001


edit time 2.167000

environment

            thyroid    wbody      skin       CEDE
```

Ref.

```
EAB dose:   0.00E+000  2.58E+000  0.00E+000  4.71E+000
LPZ dose:   0.00E+000  2.20E-001  0.00E+000  3.95E-001


edit time 2.417000

environment

            thyroid    wbody      skin       CEDE
EAB dose:   0.00E+000  3.07E+000  0.00E+000  5.10E+000
LPZ dose:   0.00E+000  2.62E-001  0.00E+000  4.26E-001


edit time 2.667000

environment

            thyroid    wbody      skin       CEDE
EAB dose:   0.00E+000  3.52E+000  0.00E+000  5.37E+000
LPZ dose:   0.00E+000  3.00E-001  0.00E+000  4.47E-001


edit time 2.917000

environment

            thyroid    wbody      skin       CEDE
EAB dose:   0.00E+000  3.96E+000  0.00E+000  5.60E+000
LPZ dose:   0.00E+000  3.37E-001  0.00E+000  4.64E-001


edit time 3.167000

environment

            thyroid    wbody      skin       CEDE
EAB dose:   0.00E+000  4.37E+000  0.00E+000  5.80E+000
LPZ dose:   0.00E+000  3.72E-001  0.00E+000  4.79E-001


edit time 3.667000
```

Ref.

```
environment

            thyroid    wbody      skin       CEDE
EAB dose:   0.00E+000  5.13E+000  0.00E+000  6.17E+000
LPZ dose:   0.00E+000  4.36E-001  0.00E+000  5.06E-001


edit time 4.167000

environment

            thyroid    wbody      skin       CEDE
EAB dose:   0.00E+000  5.82E+000  0.00E+000  6.51E+000
LPZ dose:   0.00E+000  4.95E-001  0.00E+000  5.31E-001


edit time 6.000000

environment

            thyroid    wbody      skin       CEDE
EAB dose:   0.00E+000  7.87E+000  0.00E+000  7.05E+000
LPZ dose:   0.00E+000  6.88E-001  0.00E+000  6.48E-001

edit time 8.033000

environment

            thyroid    wbody      skin       CEDE
EAB dose:   0.00E+000  8.25E+000  0.00E+000  7.17E+000
LPZ dose:   0.00E+000  7.31E-001  0.00E+000  6.66E-001


STARDOSE 1.01 (c) 1996-2002 Polestar Applied Technology, Inc.
Fri Nov 10 08:42:19 2006

Total elapsed hours: 0, mins: 0, secs: 12
```

Ref.

Appendix E3.2: Data Extracted from RESULTS.OUT Case 1A_RBEVS (RBEVS Actuation Check)

Activities in the Reactor Building
Normal Ventilation in Operation

Hours >	0.04	0.08	0.12	0.16	0.2
Kr83m	9.21E-03	3.86E-01	1.23E+00	2.45E+00	3.97E+00
Kr85m	1.94E-02	8.20E-01	2.64E+00	5.31E+00	8.65E+00
Kr85	1.12E-03	4.79E-02	1.55E-01	3.13E-01	5.14E-01
Kr87	3.64E-02	1.52E+00	4.81E+00	9.50E+00	1.53E+01
Kr88	5.18E-02	2.19E+00	7.02E+00	1.40E+01	2.28E+01
Kr89	3.77E-02	9.51E-01	1.83E+00	2.19E+00	2.13E+00
Xe131m	8.69E-04	3.70E-02	1.20E-01	2.42E-01	3.98E-01
Xe133m	4.66E-03	1.98E-01	6.43E-01	1.30E+00	2.13E+00
Xe133	1.51E-01	6.42E+00	2.08E+01	4.20E+01	6.90E+01
Xe135m	2.80E-02	1.07E+00	3.11E+00	5.62E+00	8.28E+00
Xe135	5.46E-02	2.35E+00	7.68E+00	1.56E+01	2.59E+01
Xe137	8.97E-02	2.49E+00	5.28E+00	6.96E+00	7.46E+00
Xe138	1.17E-01	4.51E+00	1.32E+01	2.43E+01	3.61E+01
I131	9.40E-02	2.95E+00	8.96E+00	1.67E+01	2.53E+01
I132	1.34E-01	4.15E+00	1.25E+01	2.30E+01	3.44E+01
I133	1.91E-01	5.96E+00	1.81E+01	3.38E+01	5.11E+01
I134	2.03E-01	6.15E+00	1.81E+01	3.28E+01	4.81E+01
I135	1.78E-01	5.56E+00	1.69E+01	3.13E+01	4.71E+01
Rb86	1.85E-04	4.97E-03	1.47E-02	2.61E-02	3.71E-02
Cs134	1.85E-02	4.98E-01	1.47E+00	2.61E+00	3.71E+00
Cs136	5.78E-03	1.56E-01	4.60E-01	8.15E-01	1.16E+00
Cs137	1.10E-02	2.97E-01	8.78E-01	1.56E+00	2.21E+00
Ba137m	7.92E-04	1.04E-01	4.59E-01	9.94E-01	1.58E+00

Appendix E3.3: RESULTS.OUT Case 1A (Integrated Check Calc for Appendix D)

edit time 720.000000

Control_Room

	thyroid	wbody	skin	CEDE
Total dose:	0.00E+000	8.21E-001	0.00E+000	2.97E+000
Noble gas	0.00E+000	7.93E-001	0.00E+000	5.97E-001
Org iodine	0.00E+000	3.95E-004	0.00E+000	2.48E-001
Elem iodine	0.00E+000	2.61E-002	0.00E+000	1.20E+000
Part iodine	0.00E+000	1.81E-003	0.00E+000	5.30E-001
Cesium	0.00E+000	1.65E-004	0.00E+000	1.83E-001
Tellurium	0.00E+000	4.68E-005	0.00E+000	3.56E-002
Barium	0.00E+000	2.91E-005	0.00E+000	5.77E-003
Noble metal	0.00E+000	5.17E-006	0.00E+000	3.68E-002
Lanthanides	0.00E+000	5.14E-006	0.00E+000	2.25E-002

```
Cerium        0.00E+000  1.99E-006  0.00E+000  7.65E-002
Strontinum    0.00E+000  3.81E-005  0.00E+000  3.76E-002

environment

             thyroid    wbody      skin       CEDE
EAB dose:    0.00E+000  3.31E+000  0.00E+000  4.30E+000
LPZ dose:    0.00E+000  8.42E-001  0.00E+000  7.27E-001

STARDOSE 1.01 (c) 1996-2002 Polestar Applied Technology, Inc.
Fri Nov 10 12:13:17 2006

             Total elapsed hours: 0, mins: 2, secs: 52
```

Appendix E3.4: RESULTS.OUT File Case 1Ax (MSIV Leakage & Permanent Bypass)

```
edit time 720.000000

Control_Room

             thyroid    wbody      skin       CEDE
Total dose:  0.00E+000  3.17E-001  0.00E+000  6.39E-001
Noble gas    0.00E+000  3.11E-001  0.00E+000  2.16E-001
Org iodine   0.00E+000  1.31E-004  0.00E+000  1.19E-001
Elem iodine  0.00E+000  6.24E-003  0.00E+000  5.37E-002
Part iodine  0.00E+000  4.35E-004  0.00E+000  1.44E-001
Cesium       0.00E+000  4.56E-005  0.00E+000  5.06E-002
Tellurium    0.00E+000  1.17E-005  0.00E+000  9.27E-003
Barium       0.00E+000  8.01E-006  0.00E+000  1.51E-003
Noble metal  0.00E+000  1.32E-006  0.00E+000  9.68E-003
Lanthanides  0.00E+000  1.77E-006  0.00E+000  5.96E-003
Cerium       0.00E+000  5.17E-007  0.00E+000  2.01E-002
      Strontinum   0.00E+000  8.91E-006  0.00E+000  9.75E-003

environment

             thyroid    wbody      skin       CEDE
EAB dose:    0.00E+000  5.04E-001  0.00E+000  3.51E-001
LPZ dose:    0.00E+000  2.30E-001  0.00E+000  8.19E-002

STARDOSE 1.01 (c) 1996-2002 Polestar Applied Technology, Inc.
Fri Nov 10 13:32:51 2006

      Total elapsed hours: 0, mins: 2, secs: 37
```

Appendix E3.5: RESULTS.OUT File Case 1Ay (Temporary Bypass)

```
edit time 720.000000
```

Ref.

```
Control_Room

              thyroid    wbody      skin       CEDE
Total dose:   0.00E+000  4.35E-001  0.00E+000  1.61E+000
Noble gas     0.00E+000  4.16E-001  0.00E+000  3.74E-001
Org iodine    0.00E+000  2.03E-004  0.00E+000  6.94E-002
Elem iodine   0.00E+000  1.81E-002  0.00E+000  5.38E-001
Part iodine   0.00E+000  1.28E-003  0.00E+000  3.62E-001
Cesium        0.00E+000  1.11E-004  0.00E+000  1.23E-001
Tellurium     0.00E+000  3.28E-005  0.00E+000  2.46E-002
Barium        0.00E+000  1.97E-005  0.00E+000  3.99E-003
Noble metal   0.00E+000  3.61E-006  0.00E+000  2.54E-002
Lanthanides   0.00E+000  3.16E-006  0.00E+000  1.55E-002
Cerium        0.00E+000  1.38E-006  0.00E+000  5.28E-002
Strontinum    0.00E+000  2.73E-005  0.00E+000  2.61E-002

environment

             thyroid    wbody      skin       CEDE
EAB dose:    0.00E+000  2.78E+000  0.00E+000  3.74E+000
LPZ dose:    0.00E+000  5.52E-001  0.00E+000  4.88E-001

STARDOSE 1.01 (c) 1996-2002 Polestar Applied Technology, Inc.
Fri Nov 10 13:49:21 2006

      Total elapsed hours: 0, mins: 2, secs: 56
```

Appendix E3.6: RESULTS.OUT File Case 1Az (Stack Release)

```
edit time 720.000000

Control_Room

              thyroid    wbody      skin       CEDE
Total dose:   0.00E+000  6.73E-002  0.00E+000  6.65E-001
Noble gas     0.00E+000  6.66E-002  0.00E+000  6.57E-003
Org iodine    0.00E+000  6.12E-005  0.00E+000  6.02E-002
Elem iodine   0.00E+000  6.32E-004  0.00E+000  5.98E-001
Part iodine   0.00E+000  1.00E-009  0.00E+000  7.83E-007
Cesium        0.00E+000  2.73E-010  0.00E+000  3.05E-007
Tellurium     0.00E+000  5.62E-011  0.00E+000  6.05E-008
Barium        0.00E+000  4.98E-011  0.00E+000  1.05E-008
Noble metal   0.00E+000  7.46E-012  0.00E+000  6.96E-008
Lanthanides   0.00E+000  3.59E-011  0.00E+000  4.53E-008
Cerium        0.00E+000  3.26E-012  0.00E+000  1.45E-007
Strontinum    0.00E+000  2.15E-011  0.00E+000  6.30E-008


environment
```

Ref.

```
              thyroid     wbody       skin        CEDE
EAB dose:     0.00E+000   2.92E-002   0.00E+000   2.09E-001
LPZ dose:     0.00E+000   5.97E-002   0.00E+000   1.58E-001

STARDOSE 1.01 (c) 1996-2002 Polestar Applied Technology, Inc.
Fri Nov 10 13:53:18 2006

      Total elapsed hours: 0, mins: 2, secs: 44
```

Appendix E3.7: Data Extracted from RESULTS.OUT File Case 1A_filter

Activities on the Control Room Filter vs. Time

Hours >	4.17E-01	6.67E-01	9.17E-01	1.17E+00	1.42E+00	1.67E+00	1.92E+00	2.03E+00	2.17E+00	2.42E+00	2.67E+00
Kr83m	0.00E+00	0.00E+00	0.00E+00	0.00E+00	0.00E+00	0.00E+00	0.00E+00	0.00E+00	0.00E+00	0.00E+00	0.00E+00
Kr85m	0.00E+00	0.00E+00	0.00E+00	0.00E+00	0.00E+00	0.00E+00	0.00E+00	0.00E+00	0.00E+00	0.00E+00	0.00E+00
Kr85	0.00E+00	0.00E+00	0.00E+00	0.00E+00	0.00E+00	0.00E+00	0.00E+00	0.00E+00	0.00E+00	0.00E+00	0.00E+00
Kr87	0.00E+00	0.00E+00	0.00E+00	0.00E+00	0.00E+00	0.00E+00	0.00E+00	0.00E+00	0.00E+00	0.00E+00	0.00E+00
Kr88	0.00E+00	0.00E+00	0.00E+00	0.00E+00	0.00E+00	0.00E+00	0.00E+00	0.00E+00	0.00E+00	0.00E+00	0.00E+00
Kr89	0.00E+00	0.00E+00	0.00E+00	0.00E+00	0.00E+00	0.00E+00	0.00E+00	0.00E+00	0.00E+00	0.00E+00	0.00E+00
Xe131m	0.00E+00	0.00E+00	0.00E+00	0.00E+00	0.00E+00	0.00E+00	0.00E+00	0.00E+00	0.00E+00	0.00E+00	0.00E+00
Xe133m	0.00E+00	0.00E+00	0.00E+00	0.00E+00	0.00E+00	0.00E+00	0.00E+00	0.00E+00	0.00E+00	0.00E+00	0.00E+00
Xe133	2.95E-05	9.22E-05	2.20E-04	4.45E-04	7.72E-04	1.20E-03	1.73E-03	2.01E-03	2.36E-03	3.07E-03	3.82E-03
Xe135m	0.00E+00	0.00E+00	0.00E+00	0.00E+00	0.00E+00	0.00E+00	0.00E+00	0.00E+00	0.00E+00	0.00E+00	0.00E+00
Xe135	3.72E-04	1.14E-03	2.68E-03	5.32E-03	9.05E-03	1.38E-02	1.96E-02	2.26E-02	2.63E-02	3.35E-02	4.10E-02
Xe137	0.00E+00	0.00E+00	0.00E+00	0.00E+00	0.00E+00	0.00E+00	0.00E+00	0.00E+00	0.00E+00	0.00E+00	0.00E+00
Xe138	0.00E+00	0.00E+00	0.00E+00	0.00E+00	0.00E+00	0.00E+00	0.00E+00	0.00E+00	0.00E+00	0.00E+00	0.00E+00
I131Org	6.83E-04	1.67E-03	3.63E-03	5.59E-03	7.76E-03	1.05E-02	1.37E-02	1.54E-02	1.71E-02	2.02E-02	2.34E-02
I132Org	8.73E-04	1.99E-03	4.00E-03	5.71E-03	7.36E-03	9.22E-03	1.12E-02	1.22E-02	1.30E-02	1.42E-02	1.53E-02
I133Org	1.37E-03	3.34E-03	7.19E-03	1.10E-02	1.51E-02	2.03E-02	2.64E-02	2.95E-02	3.26E-02	3.83E-02	4.39E-02
I134Org	1.09E-03	2.20E-03	3.92E-03	4.96E-03	5.65E-03	6.26E-03	6.74E-03	6.91E-03	6.89E-03	6.69E-03	6.35E-03
I135Org	1.25E-03	2.98E-03	6.30E-03	9.46E-03	1.28E-02	1.68E-02	2.15E-02	2.39E-02	2.61E-02	3.02E-02	3.40E-02
I131Elem	1.90E-02	4.45E-02	8.49E-02	1.13E-01	1.36E-01	1.64E-01	1.97E-01	2.14E-01	2.25E-01	2.47E-01	2.67E-01
I132Elem	2.43E-02	5.28E-02	9.42E-02	1.18E-01	1.33E-01	1.51E-01	1.71E-01	1.81E-01	1.86E-01	1.93E-01	1.99E-01
I133Elem	3.83E-02	8.87E-02	1.68E-01	2.22E-01	2.65E-01	3.17E-01	3.78E-01	4.09E-01	4.30E-01	4.66E-01	5.02E-01
I134Elem	3.05E-02	5.85E-02	9.17E-02	1.00E-01	9.91E-02	9.80E-02	9.66E-02	9.57E-02	9.09E-02	8.16E-02	7.26E-02
I135Elem	3.48E-02	7.92E-02	1.47E-01	1.91E-01	2.24E-01	2.64E-01	3.09E-01	3.31E-01	3.45E-01	3.68E-01	3.88E-01
I131Part	1.62E-02	3.04E-02	6.41E-02	1.02E-01	1.41E-01	1.80E-01	2.20E-01	2.39E-01	2.59E-01	2.83E-01	2.96E-01
I132Part	2.07E-02	3.60E-02	7.06E-02	1.04E-01	1.34E-01	1.59E-01	1.80E-01	1.89E-01	1.97E-01	1.99E-01	1.94E-01
I133Part	3.25E-02	6.05E-02	1.27E-01	2.01E-01	2.75E-01	3.49E-01	4.23E-01	4.58E-01	4.94E-01	5.35E-01	5.56E-01
I134Part	2.59E-02	3.99E-02	6.93E-02	9.07E-02	1.03E-01	1.08E-01	1.08E-01	1.07E-01	1.05E-01	9.35E-02	8.04E-02
I135Part	2.95E-02	5.40E-02	1.11E-01	1.73E-01	2.33E-01	2.90E-01	3.46E-01	3.71E-01	3.96E-01	4.21E-01	4.30E-01
Rb86	4.58E-05	8.25E-05	1.59E-04	2.46E-04	3.34E-04	4.24E-04	5.15E-04	5.58E-04	6.04E-04	6.57E-04	6.88E-04
Cs134	4.59E-03	8.25E-03	1.60E-02	2.46E-02	3.35E-02	4.25E-02	5.16E-02	5.60E-02	6.06E-02	6.60E-02	6.91E-02

Project: Nine Mile Point Nuclear Station Unit: __1_ Disposition: ____

Originator/Date	Reviewer/Date	Calculation No.	Revision
H. Pustulka 12/12/06	D. Leaver 12/12/06	H21C092	00

Ref.

Cs136	1.43E-03	2.58E-03	4.98E-03	7.69E-03	1.04E-02	1.32E-02	1.61E-02	1.74E-02	1.89E-02	2.05E-02	2.15E-02
Cs137	2.74E-03	4.93E-03	9.52E-03	1.47E-02	2.00E-02	2.54E-02	3.08E-02	3.34E-02	3.61E-02	3.94E-02	4.12E-02
Sb127	0.00E+00	1.45E-04	9.00E-04	1.76E-03	2.63E-03	3.52E-03	4.41E-03	4.84E-03	5.29E-03	5.81E-03	6.10E-03
Sb129	0.00E+00	3.89E-04	2.32E-03	4.35E-03	6.27E-03	8.07E-03	9.75E-03	1.05E-02	1.12E-02	1.19E-02	1.20E-02
Te127m	0.00E+00	1.97E-05	1.22E-04	2.39E-04	3.58E-04	4.79E-04	6.02E-04	6.61E-04	7.23E-04	7.95E-04	8.36E-04
Te127	0.00E+00	1.40E-04	8.57E-04	1.66E-03	2.47E-03	3.28E-03	4.09E-03	4.47E-03	4.88E-03	5.35E-03	5.63E-03
Te129m	0.00E+00	6.31E-05	3.91E-04	7.65E-04	1.15E-03	1.54E-03	1.93E-03	2.12E-03	2.32E-03	2.55E-03	2.68E-03
Te129	0.00E+00	3.04E-04	1.78E-03	3.32E-03	4.79E-03	6.18E-03	7.51E-03	8.11E-03	8.79E-03	9.77E-03	1.04E-02
Te131m	0.00E+00	1.90E-04	1.17E-03	2.28E-03	3.40E-03	4.52E-03	5.65E-03	6.18E-03	6.75E-03	7.38E-03	7.71E-03
Te132	0.00E+00	1.86E-03	1.15E-02	2.24E-02	3.36E-02	4.49E-02	5.63E-02	6.17E-02	6.75E-02	7.40E-02	7.77E-02
Ba137m	2.46E-03	4.61E-03	8.89E-03	1.40E-02	1.93E-02	2.47E-02	3.02E-02	3.27E-02	3.59E-02	3.94E-02	4.12E-02
Ba139	0.00E+00	6.84E-04	3.74E-03	6.45E-03	8.53E-03	1.01E-02	1.12E-02	1.15E-02	1.18E-02	1.15E-02	1.06E-02
Ba140	0.00E+00	9.21E-04	5.71E-03	1.12E-02	1.67E-02	2.24E-02	2.81E-02	3.08E-02	3.37E-02	3.71E-02	3.90E-02
Mo99	0.00E+00	1.25E-04	7.74E-04	1.51E-03	2.26E-03	3.02E-03	3.79E-03	4.15E-03	4.53E-03	4.97E-03	5.21E-03
Tc99m	0.00E+00	1.03E-04	6.33E-04	1.22E-03	1.82E-03	2.41E-03	3.00E-03	3.28E-03	3.57E-03	3.94E-03	4.16E-03
Ru103	0.00E+00	1.05E-04	6.53E-04	1.28E-03	1.92E-03	2.57E-03	3.23E-03	3.54E-03	3.87E-03	4.26E-03	4.48E-03
Ru105	0.00E+00	6.67E-05	3.98E-04	7.48E-04	1.08E-03	1.39E-03	1.68E-03	1.81E-03	1.94E-03	2.05E-03	2.07E-03
Ru106	0.00E+00	4.33E-05	2.68E-04	5.25E-04	7.87E-04	1.05E-03	1.33E-03	1.45E-03	1.59E-03	1.75E-03	1.84E-03
Rh105	0.00E+00	6.90E-05	4.27E-04	8.32E-04	1.25E-03	1.66E-03	2.08E-03	2.28E-03	2.49E-03	2.74E-03	2.87E-03
Y90	0.00E+00	6.68E-07	4.60E-06	9.97E-06	1.64E-05	2.40E-05	3.27E-05	3.72E-05	4.26E-05	5.21E-05	6.11E-05
Y91	0.00E+00	6.11E-06	3.80E-05	7.48E-05	1.13E-04	1.52E-04	1.92E-04	2.11E-04	2.32E-04	2.57E-04	2.72E-04
Y92	0.00E+00	1.44E-05	1.57E-04	4.35E-04	8.26E-04	1.31E-03	1.88E-03	2.16E-03	2.51E-03	3.20E-03	3.84E-03
Y93	0.00E+00	7.24E-06	4.41E-05	8.48E-05	1.25E-04	1.65E-04	2.03E-04	2.21E-04	2.40E-04	2.60E-04	2.68E-04
Zr95	0.00E+00	8.53E-06	5.29E-05	1.03E-04	1.55E-04	2.08E-04	2.61E-04	2.87E-04	3.14E-04	3.45E-04	3.63E-04
Zr97	0.00E+00	8.40E-06	5.15E-05	9.98E-05	1.48E-04	1.96E-04	2.44E-04	2.67E-04	2.90E-04	3.16E-04	3.29E-04
Nb95	0.00E+00	8.57E-06	5.31E-05	1.04E-04	1.56E-04	2.09E-04	2.62E-04	2.88E-04	3.15E-04	3.46E-04	3.64E-04
La140	0.00E+00	1.09E-05	7.87E-05	1.77E-04	3.00E-04	4.50E-04	6.25E-04	7.16E-04	8.28E-04	1.03E-03	1.24E-03
La141	0.00E+00	7.57E-06	4.49E-05	8.41E-05	1.21E-04	1.55E-04	1.86E-04	2.00E-04	2.14E-04	2.25E-04	2.26E-04
La142	0.00E+00	6.08E-06	3.37E-05	5.89E-05	7.89E-05	9.45E-05	1.06E-04	1.11E-04	1.14E-04	1.12E-04	1.05E-04
Pr143	0.00E+00	7.59E-06	4.71E-05	9.21E-05	1.38E-04	1.85E-04	2.33E-04	2.55E-04	2.79E-04	3.07E-04	3.23E-04
Nd147	0.00E+00	3.44E-06	2.13E-05	4.16E-05	6.24E-05	8.36E-05	1.05E-04	1.15E-04	1.26E-04	1.38E-04	1.45E-04
Am241	0.00E+00	1.43E-09	8.87E-09	1.74E-08	2.60E-08	3.49E-08	4.38E-08	4.81E-08	5.26E-08	5.79E-08	6.09E-08
Cm242	0.00E+00	3.54E-07	2.19E-06	4.29E-06	6.44E-06	8.62E-06	1.08E-05	1.19E-05	1.30E-05	1.43E-05	1.50E-05
Cm244	0.00E+00	2.35E-08	1.46E-07	2.85E-07	4.28E-07	5.73E-07	7.21E-07	7.91E-07	8.66E-07	9.52E-07	1.00E-06
Ce141	0.00E+00	2.17E-05	1.35E-04	2.63E-04	3.95E-04	5.28E-04	6.64E-04	7.29E-04	7.97E-04	8.77E-04	9.22E-04
Ce143	0.00E+00	1.97E-05	1.21E-04	2.36E-04	3.53E-04	4.70E-04	5.87E-04	6.43E-04	7.02E-04	7.68E-04	8.03E-04
Ce144	0.00E+00	1.80E-05	1.11E-04	2.18E-04	3.27E-04	4.38E-04	5.50E-04	6.04E-04	6.61E-04	7.27E-04	7.64E-04
Np239	0.00E+00	2.78E-04	1.72E-03	3.36E-03	5.02E-03	6.70E-03	8.40E-03	9.20E-03	1.01E-02	1.10E-02	1.16E-02
Pu238	0.00E+00	7.04E-08	4.37E-07	8.54E-07	1.28E-06	1.72E-06	2.16E-06	2.37E-06	2.59E-06	2.85E-06	3.00E-06
Pu239	0.00E+00	6.51E-09	4.04E-08	7.89E-08	1.18E-07	1.59E-07	1.99E-07	2.19E-07	2.39E-07	2.63E-07	2.77E-07
Pu240	0.00E+00	9.18E-09	5.69E-08	1.11E-07	1.67E-07	2.24E-07	2.81E-07	3.09E-07	3.38E-07	3.71E-07	3.90E-07
Pu241	0.00E+00	2.67E-06	1.65E-05	3.23E-05	4.85E-05	6.50E-05	8.17E-05	8.96E-05	9.81E-05	1.08E-04	1.13E-04
Sr89	0.00E+00	4.79E-04	2.97E-03	5.81E-03	8.72E-03	1.17E-02	1.47E-02	1.61E-02	1.76E-02	1.94E-02	2.04E-02
Sr90	0.00E+00	6.15E-05	3.81E-04	7.45E-04	1.12E-03	1.50E-03	1.88E-03	2.07E-03	2.26E-03	2.49E-03	2.61E-03
Sr91	0.00E+00	5.78E-04	3.52E-03	6.76E-03	9.96E-03	1.31E-02	1.62E-02	1.76E-02	1.90E-02	2.06E-02	2.12E-02

Project: Nine Mile Point Nuclear Station Unit: __1_ Disposition: ____

Originator/Date	Reviewer/Date	Calculation No.	Revision
H. Pustulka 12/12/06	D. Leaver 12/12/06	H21C092	00

Ref.

Sr92	0.00E+00	5.58E-04	3.25E-03	5.96E-03	8.38E-03	1.05E-02	1.24E-02	1.32E-02	1.40E-02	1.44E-02	1.42E-02
Hours >	**2.92E+00**	**3.17E+00**	**3.67E+00**	**4.17E+00**	**6.00E+00**	**8.03E+00**	**2.40E+01**	**4.80E+01**	**9.60E+01**	**2.40E+02**	**7.20E+02**
Kr83m	0.00E+00	0.00E+00	0.00E+00	0.00E+00	0.00E+00	0.00E+00	0.00E+00	0.00E+00	0.00E+00	0.00E+00	0.00E+00
Kr85m	0.00E+00	0.00E+00	0.00E+00	0.00E+00	0.00E+00	0.00E+00	0.00E+00	0.00E+00	0.00E+00	0.00E+00	0.00E+00
Kr85	0.00E+00	0.00E+00	0.00E+00	0.00E+00	0.00E+00	0.00E+00	0.00E+00	0.00E+00	0.00E+00	0.00E+00	0.00E+00
Kr87	0.00E+00	0.00E+00	0.00E+00	0.00E+00	0.00E+00	0.00E+00	0.00E+00	0.00E+00	0.00E+00	0.00E+00	0.00E+00
Kr88	0.00E+00	0.00E+00	0.00E+00	0.00E+00	0.00E+00	0.00E+00	0.00E+00	0.00E+00	0.00E+00	0.00E+00	0.00E+00
Kr89	0.00E+00	0.00E+00	0.00E+00	0.00E+00	0.00E+00	0.00E+00	0.00E+00	0.00E+00	0.00E+00	0.00E+00	0.00E+00
Xe131m	0.00E+00	0.00E+00	0.00E+00	0.00E+00	0.00E+00	0.00E+00	0.00E+00	0.00E+00	0.00E+00	0.00E+00	0.00E+00
Xe133m	0.00E+00	0.00E+00	0.00E+00	0.00E+00	0.00E+00	0.00E+00	0.00E+00	0.00E+00	0.00E+00	0.00E+00	0.00E+00
Xe133	4.58E-03	5.35E-03	6.88E-03	8.41E-03	1.39E-02	1.97E-02	5.20E-02	7.15E-02	7.04E-02	3.43E-02	2.44E-03
Xe135m	0.00E+00	0.00E+00	0.00E+00	0.00E+00	0.00E+00	0.00E+00	0.00E+00	0.00E+00	0.00E+00	0.00E+00	0.00E+00
Xe135	4.83E-02	5.54E-02	6.88E-02	8.11E-02	1.18E-01	1.44E-01	1.22E-01	3.06E-02	1.00E-03	1.81E-08	2.23E-24
Xe137	0.00E+00	0.00E+00	0.00E+00	0.00E+00	0.00E+00	0.00E+00	0.00E+00	0.00E+00	0.00E+00	0.00E+00	0.00E+00
Xe138	0.00E+00	0.00E+00	0.00E+00	0.00E+00	0.00E+00	0.00E+00	0.00E+00	0.00E+00	0.00E+00	0.00E+00	0.00E+00
I131Org	2.51E-02	2.69E-02	3.04E-02	3.40E-02	4.58E-02	5.01E-02	6.34E-02	7.17E-02	8.29E-02	7.89E-02	2.75E-02
I132Org	1.52E-02	1.51E-02	1.48E-02	1.42E-02	1.11E-02	6.63E-03	7.23E-05	6.45E-08	4.64E-14	1.07E-32	3.21E-95
I133Org	4.68E-02	4.97E-02	5.54E-02	6.10E-02	7.79E-02	8.02E-02	6.31E-02	3.50E-02	9.70E-03	1.27E-04	2.80E-11
I134Org	5.61E-03	4.92E-03	3.76E-03	2.83E-03	8.99E-04	1.98E-04	8.55E-10	5.86E-18	2.50E-34	1.18E-83	0.00E+00
I135Org	3.56E-02	3.71E-02	3.99E-02	4.24E-02	4.75E-02	4.23E-02	1.06E-02	1.06E-03	9.56E-06	4.29E-12	1.23E-33
I131Elem	2.78E-01	2.89E-01	3.11E-01	3.32E-01	3.63E-01	3.63E-01	3.93E-01	4.51E-01	5.34E-01	4.84E-01	1.41E-01
I132Elem	1.97E-01	1.95E-01	1.91E-01	1.85E-01	1.51E-01	1.21E-01	7.50E-02	6.04E-02	3.95E-02	1.10E-02	1.57E-04
I133Elem	5.18E-01	5.35E-01	5.66E-01	5.96E-01	6.16E-01	5.81E-01	3.91E-01	2.20E-01	6.23E-02	7.80E-04	1.43E-10
I134Elem	6.20E-02	5.29E-02	3.84E-02	2.76E-02	7.11E-03	1.44E-03	5.29E-09	3.68E-17	1.60E-33	7.16E-83	0.00E+00
I135Elem	3.94E-01	3.99E-01	4.08E-01	4.15E-01	3.76E-01	3.07E-01	6.59E-02	6.67E-03	6.14E-05	2.62E-11	6.21E-33
I131Part	3.01E-01	3.04E-01	3.09E-01	3.13E-01	3.21E-01	3.24E-01	3.09E-01	2.83E-01	2.38E-01	1.42E-01	2.53E-02
I132Part	1.82E-01	1.71E-01	1.50E-01	1.31E-01	7.78E-02	4.29E-02	3.52E-04	2.55E-07	1.33E-13	1.91E-32	2.93E-95
I133Part	5.60E-01	5.63E-01	5.64E-01	5.62E-01	5.46E-01	5.19E-01	3.07E-01	1.38E-01	2.79E-02	2.29E-04	2.58E-11
I134Part	6.71E-02	5.57E-02	3.82E-02	2.61E-02	6.30E-03	1.28E-03	4.16E-09	2.31E-17	7.15E-34	2.11E-83	0.00E+00
I135Part	4.26E-01	4.20E-01	4.06E-01	3.91E-01	3.33E-01	2.74E-01	5.18E-02	4.20E-03	2.75E-05	7.72E-12	1.12E-33
Rb86	6.99E-04	7.08E-04	7.20E-04	7.30E-04	7.51E-04	7.62E-04	7.49E-04	7.22E-04	6.70E-04	5.36E-04	2.55E-04
Cs134	7.02E-02	7.11E-02	7.24E-02	7.34E-02	7.57E-02	7.71E-02	7.77E-02	7.76E-02	7.75E-02	7.71E-02	7.57E-02
Cs136	2.18E-02	2.21E-02	2.25E-02	2.28E-02	2.34E-02	2.37E-02	2.31E-02	2.19E-02	1.97E-02	1.43E-02	4.98E-03
Cs137	4.19E-02	4.24E-02	4.32E-02	4.38E-02	4.52E-02	4.60E-02	4.64E-02	4.64E-02	4.64E-02	4.64E-02	4.63E-02
Sb127	6.19E-03	6.26E-03	6.36E-03	6.42E-03	6.53E-03	6.55E-03	5.86E-03	4.89E-03	3.42E-03	1.16E-03	3.19E-05
Sb129	1.17E-02	1.14E-02	1.07E-02	1.00E-02	7.72E-03	5.67E-03	4.40E-04	9.33E-06	4.20E-09	3.82E-19	1.29E-52
Te127m	8.51E-04	8.62E-04	8.78E-04	8.90E-04	9.18E-04	9.34E-04	9.37E-04	9.31E-04	9.20E-04	8.85E-04	7.80E-04
Te127	5.73E-03	5.82E-03	5.94E-03	6.04E-03	6.27E-03	6.42E-03	6.25E-03	5.40E-03	3.80E-03	1.29E-03	3.55E-05
Te129m	2.73E-03	2.76E-03	2.81E-03	2.85E-03	2.94E-03	2.98E-03	2.97E-03	2.91E-03	2.79E-03	2.46E-03	1.63E-03
Te129	1.08E-02	1.10E-02	1.12E-02	1.11E-02	9.65E-03	7.48E-03	6.02E-04	1.28E-05	5.74E-09	5.22E-19	1.77E-52
Te131m	7.80E-03	7.86E-03	7.92E-03	7.93E-03	7.84E-03	7.62E-03	5.31E-03	3.05E-03	1.01E-03	3.61E-05	5.48E-10
Te132	7.89E-02	7.97E-02	8.09E-02	8.16E-02	8.29E-02	8.29E-02	7.25E-02	5.86E-02	3.83E-02	1.07E-02	1.53E-04
Ba137m	4.19E-02	4.24E-02	4.32E-02	4.38E-02	4.52E-02	4.60E-02	4.64E-02	4.64E-02	4.64E-02	4.64E-02	4.63E-02
Ba139	9.52E-03	8.51E-03	6.74E-03	5.31E-03	2.17E-03	7.95E-04	2.56E-07	1.43E-12	4.46E-23	1.35E-54	0.00E+00
Ba140	3.96E-02	4.01E-02	4.09E-02	4.14E-02	4.25E-02	4.31E-02	4.19E-02	3.97E-02	3.56E-02	2.57E-02	8.64E-03

Project: Nine Mile Point Nuclear Station Unit: 1 Disposition: ____

Originator/Date	Reviewer/Date	Calculation No.	Revision
H. Pustulka 12/12/06	D. Leaver 12/12/06	H21C092	00

Ref.

Mo99	5.29E-03	5.35E-03	5.42E-03	5.47E-03	5.53E-03	5.51E-03	4.70E-03	3.65E-03	2.20E-03	4.85E-04	3.12E-06
Tc99m	4.26E-03	4.34E-03	4.48E-03	4.59E-03	4.90E-03	5.11E-03	5.02E-03	4.01E-03	2.43E-03	5.34E-04	3.44E-06
Ru103	4.55E-03	4.61E-03	4.70E-03	4.76E-03	4.91E-03	4.99E-03	4.97E-03	4.88E-03	4.71E-03	4.24E-03	2.98E-03
Ru105	2.03E-03	1.98E-03	1.86E-03	1.75E-03	1.35E-03	1.00E-03	8.35E-05	1.96E-06	1.09E-09	1.84E-19	4.95E-52
Ru106	1.87E-03	1.90E-03	1.93E-03	1.96E-03	2.02E-03	2.06E-03	2.07E-03	2.07E-03	2.06E-03	2.04E-03	1.96E-03
Rh105	2.92E-03	2.95E-03	3.00E-03	3.03E-03	3.07E-03	3.05E-03	2.34E-03	1.47E-03	5.73E-04	3.40E-05	2.76E-09
Y90	6.91E-05	7.70E-05	9.27E-05	1.08E-04	1.66E-04	2.29E-04	6.63E-04	1.19E-03	1.90E-03	2.73E-03	2.94E-03
Y91	2.80E-04	2.86E-04	2.96E-04	3.06E-04	3.33E-04	3.56E-04	4.30E-04	4.53E-04	4.48E-04	4.18E-04	3.30E-04
Y92	4.37E-03	4.85E-03	5.62E-03	6.19E-03	6.99E-03	6.49E-03	6.46E-04	7.44E-06	6.53E-10	3.71E-22	5.55E-63
Y93	2.68E-04	2.67E-04	2.63E-04	2.58E-04	2.34E-04	2.08E-04	6.98E-05	1.34E-05	4.94E-07	2.47E-11	1.15E-25
Zr95	3.69E-04	3.74E-04	3.81E-04	3.86E-04	3.98E-04	4.05E-04	4.05E-04	4.01E-04	3.92E-04	3.67E-04	2.96E-04
Zr97	3.31E-04	3.32E-04	3.32E-04	3.29E-04	3.15E-04	2.95E-04	1.55E-04	5.77E-05	8.05E-06	2.18E-08	6.08E-17
Nb95	3.70E-04	3.75E-04	3.83E-04	3.88E-04	4.00E-04	4.07E-04	4.11E-04	4.10E-04	4.10E-04	4.06E-04	3.81E-04
La140	1.42E-03	1.60E-03	1.97E-03	2.33E-03	3.65E-03	5.07E-03	1.41E-02	2.31E-02	3.11E-02	2.87E-02	9.95E-03
La141	2.20E-04	2.14E-04	1.99E-04	1.85E-04	1.38E-04	9.82E-05	5.92E-06	8.59E-08	1.81E-11	1.68E-22	2.83E-59
La142	9.56E-05	8.65E-05	7.04E-05	5.70E-05	2.58E-05	1.05E-05	8.03E-09	1.64E-13	6.82E-23	4.91E-51	0.00E+00
Pr143	3.29E-04	3.34E-04	3.41E-04	3.46E-04	3.59E-04	3.67E-04	3.81E-04	3.84E-04	3.68E-04	2.81E-04	1.01E-04
Nd147	1.48E-04	1.50E-04	1.52E-04	1.54E-04	1.58E-04	1.60E-04	1.55E-04	1.46E-04	1.28E-04	8.78E-05	2.48E-05
Am241	6.19E-08	6.27E-08	6.40E-08	6.48E-08	6.69E-08	6.81E-08	6.86E-08	6.86E-08	6.86E-08	6.86E-08	6.86E-08
Cm242	1.53E-05	1.55E-05	1.58E-05	1.60E-05	1.65E-05	1.68E-05	1.69E-05	1.68E-05	1.67E-05	1.63E-05	1.49E-05
Cm244	1.02E-06	1.03E-06	1.05E-06	1.07E-06	1.10E-06	1.12E-06	1.13E-06	1.13E-06	1.13E-06	1.13E-06	1.13E-06
Ce141	9.37E-04	9.50E-04	9.67E-04	9.80E-04	1.01E-03	1.03E-03	1.02E-03	9.99E-04	9.57E-04	8.42E-04	5.50E-04
Ce143	8.13E-04	8.19E-04	8.26E-04	8.29E-04	8.22E-04	8.02E-04	5.78E-04	3.50E-04	1.28E-04	6.22E-06	2.62E-10
Ce144	7.77E-04	7.88E-04	8.03E-04	8.14E-04	8.39E-04	8.54E-04	8.60E-04	8.58E-04	8.53E-04	8.41E-04	8.01E-04
Np239	1.17E-02	1.18E-02	1.20E-02	1.21E-02	1.22E-02	1.21E-02	1.00E-02	7.47E-03	4.14E-03	7.07E-04	1.95E-06
Pu238	3.05E-06	3.09E-06	3.15E-06	3.19E-06	3.29E-06	3.35E-06	3.38E-06	3.38E-06	3.38E-06	3.38E-06	3.38E-06
Pu239	2.82E-07	2.85E-07	2.91E-07	2.95E-07	3.04E-07	3.10E-07	3.12E-07	3.12E-07	3.12E-07	3.12E-07	3.12E-07
Pu240	3.97E-07	4.02E-07	4.10E-07	4.16E-07	4.29E-07	4.37E-07	4.40E-07	4.40E-07	4.40E-07	4.40E-07	4.40E-07
Pu241	1.15E-04	1.17E-04	1.19E-04	1.21E-04	1.25E-04	1.27E-04	1.28E-04	1.28E-04	1.28E-04	1.28E-04	1.27E-04
Sr89	2.07E-02	2.10E-02	2.14E-02	2.17E-02	2.23E-02	2.27E-02	2.27E-02	2.24E-02	2.18E-02	2.00E-02	1.52E-02
Sr90	2.66E-03	2.69E-03	2.75E-03	2.78E-03	2.87E-03	2.92E-03	2.95E-03	2.95E-03	2.95E-03	2.95E-03	2.94E-03
Sr91	2.12E-02	2.11E-02	2.07E-02	2.03E-02	1.83E-02	1.61E-02	5.04E-03	8.72E-04	2.61E-05	7.03E-10	4.10E-25
Sr92	1.36E-02	1.29E-02	1.16E-02	1.03E-02	6.67E-03	4.04E-03	6.88E-05	1.49E-07	7.00E-13	7.25E-29	3.78E-82

Ref.

Appendix E4: INPUT.DAT File for Case 2A (No Core Spray, Division Electrical Failure)

```
edit_time
0 0.417 0.667 0.917 1.167 1.417 1.667 1.917 2.033 2.167 2.417 2.667 2.917 3.167 3.667 4.167 6 8.033 24 48 96 240 720
end_edit_time

participating_isotopes
Kr83m  Kr85m  Kr85  Kr87  Kr88  Kr89
Xe131m  Xe133m  Xe133  Xe135m  Xe135  Xe137  Xe138
I131Org I131Elem  I131Part
I132Org I132Elem  I132Part
I133Org I133Elem  I133Part
I134Org I134Elem  I134Part
I135Org I135Elem  I135Part
Rb86  Cs134  Cs136  Cs137
Sb127  Sb129  Te127m Te127  Te129m Te129  Te131m Te132
Ba137m Ba139  Ba140
Mo99  Tc99m  Ru103  Ru105  Ru106  Rh105
Y90  Y91  Y92  Y93  Zr95  Zr97  Nb95
La140  La141  La142  Pr143  Nd147  Am241  Cm242  Cm244
Ce141  Ce143  Ce144  Np239  Pu238  Pu239  Pu240  Pu241
Sr89  Sr90  Sr91  Sr92
end_participating_isotopes

core
thermal_power                    1887
elemental_iodine_frac            0.0485
organic_iodine_frac              0.0015
particulate_iodine_frac          0.95
release_frac
to_control_volume DW
Time N_Gas I_Grp CsGrp TeGrp BaGrp NMtls CeGrp LaGrp SrGrp
0.033    0        0        0        0        0        0        0        0        0
0.533    0.1      0.1      0.1      0        0        0        0        0        0
2.033    0.633    0.167    0.133    0.033    0.0133   0.00167  0.00033  0.00013  0.0133
720      0        0        0        0        0        0        0        0        0
end_to_control_volume
to_control_volume SP
Time N_Gas I_Grp CsGrp TeGrp BaGrp NMtls CeGrp LaGrp SrGrp
0.033    0        0        0        0        0        0        0        0        0
0.533    0        0.2      0        0        0        0        0        0        0
2.033    0        0.334    0        0        0        0        0        0        0
720      0        0        0        0        0        0        0        0        0
end_to_control_volume
end_release_frac
end_core

control_volume
obj_type                         OBJ_CV
name                             DW
air_volume                       1.8e+005
water_volume                     0
surface_area                     1
has_recirc_filter                false
removal_rate_to_surface
```

Ref.

Time	NobleGas	Elemlodine		Orglodine	Partlodine	Solubles	Insolubles
0.0642	0.0000	20.000	0.000	44.454	44.454	44.454	
0.5292	0.0000	18.932	0.000	18.932	18.932	18.932	
0.5554	0.0000	20.000	0.000	27.189	27.189	27.189	
0.9324	0.0000	19.258	0.000	19.258	19.258	19.258	
2.0188	0.0000	16.487	0.000	16.487	16.487	16.487	
3.2333	0.0000	4.427	0.000	4.427	4.427	4.427	
4.8293	0.0000	2.718	0.000	2.718	2.718	2.718	
15.8029	0.0000	1.950	0.000	1.950	1.950	1.950	
720.0000	0.0000	0.000	0.000	0.000	0.000	0.000	

end_removal_rate_to_surface
frac_4_daughter_resusp_from_surface

Time	NobleGas	Elemlodine		Orglodine	Partlodine	Solubles	Insolubles
720	1	0	0	0	0	0	

end_frac_4_daughter_resusp_from_surface
end_control_volume

control_volume
obj_type OBJ_CV
name WW
air_volume 1.2e+005
water_volume 7.97e+004
surface_area 0
has_recirc_filter false
removal_rate_to_waterpool

Time	NobleGas	Elemlodine		Orglodine	Partlodine	Solubles	Insolubles
720	0	0	0	0	0	0	

end_removal_rate_to_waterpool
frac_4_daughter_resusp_from_water

Time	NobleGas	Elemlodine		Orglodine	Partlodine	Solubles	Insolubles
720	0	0	0	0	0	0	

end_frac_4_daughter_resusp_from_water
decontamination_factor

Time	NobleGas	Elemlodine		Orglodine	Partlodine	Solubles	Insolubles
720	1	1	1	1	1	1	

end_decontamination_factor
end_control_volume

control_volume
obj_type OBJ_CV
name SL1
air_volume 82.4
water_volume 0
surface_area 0
has_recirc_filter false
removal_rate_to_surface

Time	NobleGas	Elemlodine		Orglodine	Partlodine	Solubles	Insolubles
0.0436	0.0000	0.000	0.000	1.387	1.387	1.387	
0.2928	0.0000	0.000	0.000	1.273	1.273	1.273	
0.5587	0.0000	0.000	0.000	0.884	0.884	0.884	
1.0113	0.0000	0.000	0.000	0.812	0.812	0.812	
1.9565	0.0000	0.000	0.000	0.908	0.908	0.908	
3.9920	0.0000	0.000	0.000	0.816	0.816	0.816	
5.9502	0.0000	0.000	0.000	0.604	0.604	0.604	
19.1058	0.0000	0.000	0.000	0.380	0.380	0.380	
720.0000	0.0000	0.000	0.000	0.000	0.000	0.000	

Ref.

```
end_removal_rate_to_surface
frac_4_daughter_resusp_from_surface
Time      NobleGas Elemlodine          Orglodine Partlodine Solubles  Insolubles
720       1        0        0         0         0         0
end_frac_4_daughter_resusp_from_surface
end_control_volume

control_volume
obj_type                               OBJ_CV
name                                   SL2
air_volume                   82.4
water_volume                           0
surface_area                           0
has_recirc_filter                      false
removal_rate_to_surface
Time      NobleGas Elemlodine          Orglodine Partlodine Solubles  Insolubles
0.0436    0.0000   0.000    0.000     1.387     1.387     1.387
0.2928    0.0000   0.000    0.000     1.273     1.273     1.273
0.5587    0.0000   0.000    0.000     0.884     0.884     0.884
1.0113    0.0000   0.000    0.000     0.812     0.812     0.812
1.9565    0.0000   0.000    0.000     0.908     0.908     0.908
3.9920    0.0000   0.000    0.000     0.816     0.816     0.816
5.9502    0.0000   0.000    0.000     0.604     0.604     0.604
19.1058   0.0000   0.000    0.000     0.380     0.380     0.380
720.0000  0.0000   0.000    0.000     0.000     0.000     0.000
end_removal_rate_to_surface
frac_4_daughter_resusp_from_surface
Time      NobleGas Elemlodine          Orglodine Partlodine Solubles  Insolubles
720       1        0        0         0         0         0
end_frac_4_daughter_resusp_from_surface
end_control_volume

control_volume
obj_type                               OBJ_CV
name                                   RB
air_volume                   1.06e+006
water_volume                           0
surface_area                           0
has_recirc_filter                      false
end_control_volume

control_volume
obj_type                               OBJ_CV
name                                   RB'
air_volume                   100
water_volume                           0
surface_area                           0
has_recirc_filter                      false
end_control_volume

control_volume
obj_type                               OBJ_CV
name                                   SP
air_volume                   7.97e+004
water_volume                           0
surface_area                           0
```

Ref.

```
has_recirc_filter                    false
end_control_volume

control_volume
obj_type                             OBJ_CR
name                                 Control_Room
air_volume                   1.35e+005
water_volume                         0
surface_area                         0
has_recirc_filter                    false
breathing_rate
Time      (hr)      Value     (cms)
720                 0.00035
end_breathing_rate
occupancy_factor
Time      (hr)      Value     (frac)
24                  1
96                  0.6
720                 0.4
end_occupancy_factor
end_control_volume


junction
junction_type                        AIR_JUNCTION
downstream_location          AIR_SPACE
upstream                             CORE
downstream                   DW
has_filter                           false
flow_rate
Time      (hr)      Value     (cfm)
720                 1
end_flow_rate
end_junction

junction
junction_type                        AIR_JUNCTION
downstream_location          AIR_SPACE
upstream                             CORE
downstream                   SP
has_filter                           false
flow_rate
Time      (hr)      Value     (cfm)
720                 1
end_flow_rate
end_junction

junction
junction_type                        AIR_JUNCTION
downstream_location          WATER_POOL
upstream                             DW
downstream                   WW
has_filter                           false
flow_rate
Time      (hr)      Value     (cfm)
2.033               0
```

Ref.

```
720                     1.8e5
end_flow_rate
end_junction

junction
junction_type                           AIR_JUNCTION
downstream_location             AIR_SPACE
upstream                                WW
downstream                      DW
has_filter                              false
flow_rate
Time        (hr)        Value       (cfm)
2.033                   0
720                     1.8e5
end_flow_rate
end_junction

junction
junction_type                           AIR_JUNCTION
downstream_location             AIR_SPACE
upstream                                DW
downstream                      SL1
has_filter                              true
flow_rate
Time        (hr)        Value       (cfm)
0.033333333             0.342
0.055555556             0.26484123
0.069444444             0.25210074
0.111111111             0.250035166
0.166666667             0.254123074
0.25        0.26484123
0.319444444             0.278679155
0.5         0.290714629
0.533333333             0.310810764
0.583333333             0.286088981
0.833333333             0.26484123
2.033333333             0.257402003
2.777777778             0.254787866
16.66666667             0.25210074
27.77777778             0.229167164
96          0.22016269
277.7777778             0.22016269
480.5555556             0.258682837
720         0.278679155
end_flow_rate
filter_efficiency
Time        NobleGas Elemiodine         Orgiodine Partiodine Solubles   Insolubles
720         0        0.5        0       0.5       0.5       0.5
end_filter_efficiency
frac_4_daughter_resusp
Time        NobleGas Elemiodine         Orgiodine Partiodine Solubles   Insolubles
720         1        0          0       0         0         0
end_frac_4_daughter_resusp
end_junction

junction
```

Ref.

```
junction_type                    AIR_JUNCTION
downstream_location              AIR_SPACE
upstream                         SL1
downstream                       environment
has_filter                       false
flow_rate
Time        (hr)        Value       (cfm)
0.033333333             0.398
0.055555556             0.308207045
0.069444444             0.293380394
0.111111111             0.290976596
0.166666667             0.29573387
0.25        0.308207045
0.319444444             0.324310829
0.5         0.338317024
0.533333333             0.361703755
0.583333333             0.332933961
0.833333333             0.308207045
2.033333333             0.299549699
2.777777778             0.296507517
16.66666667             0.293380394
27.77777778             0.266691611
96          0.256212721
277.7777778             0.256212721
480.5555556             0.301040261
720         0.324310829
end_flow_rate
X_over_Q_4_ctrl_room
Time        (hr)        Value       (s/m*3)
0.667                   5.85e-4
2.667                   1.03e-3
8.033                   5.85e-4
24                      2.07e-4
96                      1.75e-4
720                     1.52e-4
end_X_over_Q_4_ctrl_room
X_over_Q_4_site_boundary
Time        (hr)        Value       (s/m*3)
0.667                   0
2.667                   1.90e-4
720                     0
end_X_over_Q_4_site_boundary
X_over_Q_4_low_population_zone
Time        (hr)        Value       (s/m*3)
8.033                   1.63e-5
24                      1.10e-5
96                      4.67e-6
720                     1.37e-6
end_X_over_Q_4_low_population_zone
end_junction

junction
junction_type                    AIR_JUNCTION
downstream_location              AIR_SPACE
upstream                         DW
downstream                       SL2
```

Project: Nine Mile Point Nuclear Station Unit: __1__ Disposition: ____

Originator/Date	Reviewer/Date	Calculation No.	Revision
H. Pustulka 12/12/06	D. Leaver 12/12/06	H21C092	00

Ref.

```
has_filter                          true
flow_rate
Time        (hr)        Value       (cfm)
0.033333333             0.342
0.055555556             0.26484123
0.069444444             0.25210074
0.111111111             0.250035166
0.166666667             0.254123074
0.25        0.26484123
0.319444444             0.278679155
0.5         0.290714629
0.533333333             0.310810764
0.583333333             0.286088981
0.833333333             0.26484123
2.033333333             0.257402003
2.777777778             0.254787866
16.66666667             0.25210074
27.77777778             0.229167164
96          0.22016269
277.7777778             0.22016269
480.5555556             0.258682837
720         0.278679155
end_flow_rate
filter_efficiency
Time        NobleGas Elemlodine         Orglodine Partlodine Solubles   Insolubles
720         0        0.5        0       0.5       0.5       0.5
end_filter_efficiency
frac_4_daughter_resusp
Time        NobleGas Elemlodine         Orglodine Partlodine Solubles   Insolubles
720         1        0          0       0         0         0
end_frac_4_daughter_resusp
end_junction

junction
junction_type                       AIR_JUNCTION
downstream_location         AIR_SPACE
upstream                            SL2
downstream                  environment
has_filter                          false
flow_rate
Time        (hr)        Value       (cfm)
0.033333333             0.398
0.055555556             0.308207045
0.069444444             0.293380394
0.111111111             0.290976596
0.166666667             0.29573387
0.25        0.308207045
0.319444444             0.324310829
0.5         0.338317024
0.533333333             0.361703755
0.583333333             0.332933961
0.833333333             0.308207045
2.033333333             0.299549699
2.777777778             0.296507517
16.66666667             0.293380394
27.77777778             0.266691611
```

Ref.

```
96          0.256212721
277.7777778         0.256212721
480.5555556         0.301040261
720         0.324310829
end_flow_rate
X_over_Q_4_ctrl_room
Time        (hr)        Value       (s/m*3)
0.667                   5.85e-4
2.667                   1.03e-3
8.033                   5.85e-4
24                      2.07e-4
96                      1.75e-4
720                     1.52e-4
end_X_over_Q_4_ctrl_room
X_over_Q_4_site_boundary
Time        (hr)        Value       (s/m*3)
0.667                   0
2.667                   1.90e-4
720                     0
end_X_over_Q_4_site_boundary
X_over_Q_4_low_population_zone
Time        (hr)        Value       (s/m*3)
8.033                   1.63e-5
24                      1.10e-5
96                      4.67e-6
720                     1.37e-6
end_X_over_Q_4_low_population_zone
end_junction

junction
junction_type                           AIR_JUNCTION
downstream_location             AIR_SPACE
upstream                                DW
downstream                      environment
has_filter                              true
flow_rate
Time        (hr)        Value       (cfm)
0.033333333         2.159
0.055555556         1.671907063
0.069444444         1.591478064
0.111111111         1.57843837
0.166666667         1.604244789
0.25        1.671907063
0.319444444         1.75926402
0.5         1.83524235
0.533333333         1.962106548
0.583333333         1.80604126
0.833333333         1.671907063
2.033333333         1.624944224
2.777777778         1.60844153
61.591478064
16.66666667         0.209346813
27.77777778         0.190302557
96          0.182825158
277.7777778         0.182825158
480.5555556         0.214812648
```

Ref.

```
720         0.231417777
end_flow_rate
filter_efficiency
Time        NobleGas Elemlodine          Orglodine Partlodine Solubles  Insolubles
60          0.066    0         0.066     0.066     0.066
720         0        0.5       0         0.5       0.5       0.5
end_filter_efficiency
frac_4_daughter_resusp
Time        NobleGas Elemlodine          Orglodine Partlodine Solubles  Insolubles
720         1        0         0         0         0         0
end_frac_4_daughter_resusp
X_over_Q_4_ctrl_room
Time        (hr)     Value     (s/m*3)
0.667                3.04e-4
2.667                5.54e-4
6           3.04e-4
8.033                5.85e-4
24                   2.07e-4
96                   1.75e-4
720                  1.52e-4
end_X_over_Q_4_ctrl_room
X_over_Q_4_site_boundary
Time        (hr)     Value     (s/m*3)
0.667                0
2.667                1.90e-4
720                  0
end_X_over_Q_4_site_boundary
X_over_Q_4_low_population_zone
Time        (hr)     Value     (s/m*3)
8.033                1.63e-5
24                   1.10e-5
96                   4.67e-6
720                  1.37e-6
end_X_over_Q_4_low_population_zone
end_junction

junction
junction_type                    AIR_JUNCTION
downstream_location              AIR_SPACE
upstream                         WW
downstream                       environment
has_filter                       false
flow_rate
Time        (hr)     Value     (cfm)
0.033333333          1.25
0.055555556          0.967986952
0.069444444          0.921420834
0.111111111          0.913871219
0.166666667          0.928812407
0.25        0.967986952
0.319444444          1.018564161
0.5         1.062553468
0.533333333          1.136004254
0.583333333          1.045646862
0.833333333          0.967986952
2.033333333          0.940796795
```

Ref.

```
2.777777778          0.931242201
60.921420834
720                  0.0
end_flow_rate
X_over_Q_4_ctrl_room
Time      (hr)       Value      (s/m*3)
0.667                2.61e-4
2.667                4.82e-4
8.033                2.61e-4
24                   9.25e-5
96                   6.7e-5
720                  4.93e-5
end_X_over_Q_4_ctrl_room
X_over_Q_4_site_boundary
Time      (hr)       Value      (s/m*3)
0.667                0
2.667                1.90e-4
720                  0
end_X_over_Q_4_site_boundary
X_over_Q_4_low_population_zone
Time      (hr)       Value      (s/m*3)
8.033                1.63e-5
24                   1.10e-5
96                   4.67e-6
720                  1.37e-6
end_X_over_Q_4_low_population_zone
end_junction

junction
junction_type                   AIR_JUNCTION
downstream_location             AIR_SPACE
upstream                        SP
downstream                      RB'
has_filter                      true
flow_rate
Time      (hr)       Value      (cfm)
6         2.67
720                  0
end_flow_rate
filter_efficiency
Time      NobleGas   Elemlodine      Orglodine  Partlodine Solubles   Insolubles
720       0.5        0.0        0.0  1.0        0          0
end_filter_efficiency
end_junction

junction
junction_type                   AIR_JUNCTION
downstream_location             AIR_SPACE
upstream                        RB'
downstream                      environment
has_filter                      false
flow_rate
Time      (hr)       Value      (cfm)
0.5                  1481
0.7                  918
1         792
```

Ref.

```
2.0333          474
4.1667          252
720             0
end_flow_rate
X_over_Q_4_ctrl_room
Time    (hr)    Value   (s/m*3)
0.667           2.61e-4
2.667           4.82e-4
8       2.61e-4
24              9.25e-5
96              6.7e-5
720             4.93e-5
end_X_over_Q_4_ctrl_room
X_over_Q_4_site_boundary
Time    (hr)    Value   (s/m*3)
0.667           0
2.667           1.90e-4
720             0
end_X_over_Q_4_site_boundary
X_over_Q_4_low_population_zone
Time    (hr)    Value   (s/m*3)
8.033           1.63e-5
24              1.10e-5
96              4.67e-6
720             1.37e-6
end_X_over_Q_4_low_population_zone
end_junction

junction
junction_type                   AIR_JUNCTION
downstream_location             AIR_SPACE
upstream                        RB'
downstream                      environment
has_filter                      true
flow_rate
Time    (hr)    Value   (cfm)
0.5             0
0.7             495
1       1761
2.0333          5253
6       6710
720             0
end_flow_rate
filter_efficiency
Time    NobleGas Elemlodine     Orglodine Partlodine Solubles   Insolubles
720     0       0.95    0.9     0.95      0.95       0.95
end_filter_efficiency
frac_4_daughter_resusp
Time    NobleGas Elemlodine     Orglodine Partlodine Solubles   Insolubles
720     1       1       0       0         0          0
end_frac_4_daughter_resusp
X_over_Q_4_ctrl_room
Time    (hr)    Value   (s/m*3)
0.667           1.26E-4
2.667           2.27E-4
8.033           1.26E-4
```

Ref.

```
24                  4.30E-5
96                  3.58E-5
720                 2.59E-5
end_X_over_Q_4_ctrl_room
X_over_Q_4_site_boundary
Time        (hr)        Value       (s/m*3)
0.667               0
2.667               5.98e-5
720                 0
end_X_over_Q_4_site_boundary
X_over_Q_4_low_population_zone
Time        (hr)        Value       (s/m*3)
0.167               2.12e-5
4.167               1.26e-6
8.033               2.12e-5
24                  8.40e-7
96                  3.45e-7
720                 1.11e-7
end_X_over_Q_4_low_population_zone
end_junction

junction
junction_type                   AIR_JUNCTION
downstream_location         AIR_SPACE
upstream                        DW
downstream                  RB
has_filter                      false
flow_rate
Time        (hr)        Value       (cfm)
6           0
16.66666667         1.382131251
27.77777778         1.256398923
96          1.207032291
277.7777778         1.207032291
480.5555556         1.418217308
720         1.527846242
end_flow_rate
end_junction

junction
junction_type                   AIR_JUNCTION
downstream_location         AIR_SPACE
upstream                    WW
downstream                      RB
has_filter                  false
flow_rate
Time        (hr)        Value       (cfm)
6                   0
16.66666667         0.921420834
27.77777778         0.837599282
96          0.804688194
277.7777778         0.804688194
480.5555556         0.945478205
720         1.018564161
end_flow_rate
end_junction
```

Ref.

```
junction
junction_type                    AIR_JUNCTION
downstream_location              AIR_SPACE
upstream                         SP
downstream                       RB
has_filter                       true
flow_rate
Time      (hr)      Value     (cfm)
6         0
720                 2.67
end_flow_rate
filter_efficiency
Time      NobleGas  Elemlodine        Orglodine  Partlodine  Solubles   Insolubles
720       0.5       0.0       0.0     1.0        0           0
end_filter_efficiency
end_junction

junction
junction_type                    AIR_JUNCTION
downstream_location              AIR_SPACE
upstream                         RB
downstream                       environment
has_filter                       true
flow_rate
Time      (hr)      Value     (cfm)
720                 1600
end_flow_rate
filter_efficiency
Time      NobleGas  Elemlodine        Orglodine  Partlodine  Solubles   Insolubles
60        0         0         0       0          0
720       0         0.95      0.9     0.95       0.95        0.95
end_filter_efficiency
frac_4_daughter_resusp
Time      NobleGas  Elemlodine        Orglodine  Partlodine  Solubles   Insolubles
720       1         1         0       0          0           0
end_frac_4_daughter_resusp
X_over_Q_4_ctrl_room
Time      (hr)      Value     (s/m*3)
0.667               1.26E-4
2.667               2.27E-4
8.033               1.26E-4
24                  4.30E-5
96                  3.58E-5
720                 2.59E-5
end_X_over_Q_4_ctrl_room
X_over_Q_4_site_boundary
Time      (hr)      Value     (s/m*3)
0.667               0
2.667               5.98e-5
720                 0
end_X_over_Q_4_site_boundary
X_over_Q_4_low_population_zone
Time      (hr)      Value     (s/m*3)
0.167               2.12e-5
4.167               1.26e-6
```

Ref.

```
8.033           2.12e-5
24              8.40e-7
96              3.45e-7
720             1.11e-7
end_X_over_Q_4_low_population_zone
end_junction

junction
junction_type                   AIR_JUNCTION
downstream_location             AIR_SPACE
upstream                        environment
downstream                      Control_Room
has_filter                      true
flow_rate
Time    (hr)    Value   (cfm)
720     2025
end_flow_rate
filter_efficiency
Time    NobleGas Elemlodine     Orglodine Partlodine Solubles  Insolubles
720     0       0.95    0.9     0.95      0.95       0.95
end_filter_efficiency
frac_4_daughter_resusp
Time    NobleGas Elemlodine     Orglodine Partlodine Solubles  Insolubles
720     1       1       0       0         0          0
end_frac_4_daughter_resusp
end_junction

junction
junction_type                   AIR_JUNCTION
downstream_location             AIR_SPACE
upstream                        environment
downstream                      Control_Room
has_filter                      false
flow_rate
Time    (hr)    Value   (cfm)
720     100
end_flow_rate
end_junction

junction
junction_type                   AIR_JUNCTION
downstream_location             AIR_SPACE
upstream                        Control_Room
downstream                      environment
has_filter                      false
flow_rate
Time    (hr)    Value   (cfm)
720     2125
end_flow_rate
X_over_Q_4_ctrl_room
Time    (hr)    Value   (s/m*3)
720     0
end_X_over_Q_4_ctrl_room
X_over_Q_4_site_boundary
Time    (hr)    Value   (s/m*3)
720     0
```

Ref.

```
end_X_over_Q_4_site_boundary
X_over_Q_4_low_population_zone
Time      (hr)      Value     (s/m*3)
720       0
end_X_over_Q_4_low_population_zone
end_junction

environment
breathing_rate_sb
Time      (hr)      Value     (cms)
8.033               0.00035
720                 0.0
end_breathing_rate_sb
breathing_rate_lpz
Time      (hr)      Value     (cms)
8.033               0.00035
24                  0.00018
720                 0.00023
end_breathing_rate_lpz
end_environment
```

Appendix E5: RESULTS.OUT File Excerpt for Case 2A (No Core Spray, Division Electrical Failure)

```
Control_Room

              thyroid    wbody      skin       CEDE
Total dose:   0.00E+000  6.34E-001  0.00E+000  2.66E+000
Noble gas     0.00E+000  6.09E-001  0.00E+000  4.32E-001
Org iodine    0.00E+000  3.31E-004  0.00E+000  2.36E-001
Elem iodine   0.00E+000  2.33E-002  0.00E+000  1.17E+000
Part iodine   0.00E+000  1.58E-003  0.00E+000  4.65E-001
Cesium        0.00E+000  1.44E-004  0.00E+000  1.60E-001
Tellurium     0.00E+000  4.13E-005  0.00E+000  3.14E-002
Barium        0.00E+000  2.56E-005  0.00E+000  5.10E-003
Noble metal   0.00E+000  4.56E-006  0.00E+000  3.25E-002
Lanthanides   0.00E+000  4.61E-006  0.00E+000  1.99E-002
Cerium        0.00E+000  1.76E-006  0.00E+000  6.76E-002
Strontinum    0.00E+000  3.35E-005  0.00E+000  3.32E-002


environment

              thyroid    wbody      skin       CEDE
EAB dose:     0.00E+000  2.51E+000  0.00E+000  3.94E+000
LPZ dose:     0.00E+000  6.47E-001  0.00E+000  6.77E-001

STARDOSE 1.01 (c) 1996-2002 Polestar Applied Technology, Inc.
Sun Dec 10 22:09:52 2006

      Total elapsed hours: 0, mins: 9, secs: 49
```

Ref.

Appendix E6: INPUT.DAT File for Case 1B (Core Spray MSIV Failure)

```
edit_time
0 0.417 0.667 0.917 1.167 1.417 1.667 1.917 2.033 2.167 2.417 2.667 2.917 3.167 3.667 4.167 6 8.033 24 48 96 240 720
end_edit_time

participating_isotopes
Kr83m  Kr85m  Kr85  Kr87  Kr88  Kr89
Xe131m Xe133m Xe133 Xe135m Xe135 Xe137 Xe138
I131Org I131Elem    I131Part
I132Org I132Elem    I132Part
I133Org I133Elem    I133Part
I134Org I134Elem    I134Part
I135Org I135Elem    I135Part
Rb86  Cs134  Cs136  Cs137
Sb127  Sb129  Te127m Te127  Te129m Te129  Te131m Te132
Ba137m Ba139  Ba140
Mo99  Tc99m  Ru103  Ru105  Ru106  Rh105
Y90  Y91  Y92  Y93  Zr95  Zr97  Nb95
La140  La141  La142  Pr143  Nd147  Am241  Cm242  Cm244
Ce141  Ce143  Ce144  Np239  Pu238  Pu239  Pu240  Pu241
Sr89  Sr90  Sr91  Sr92
end_participating_isotopes

core
thermal_power                    1887
elemental_iodine_frac            0.0485
organic_iodine_frac              0.0015
particulate_iodine_frac          0.95
release_frac
to_control_volume DW
Time N_Gas I_Grp CsGrp TeGrp BaGrp NMtls CeGrp LaGrp SrGrp
0.033    0       0       0       0       0       0       0       0       0
0.533    0.1     0.1     0.1     0       0       0       0       0       0
2.033    0.633   0.167   0.133   0.033   0.0133  0.00167 0.00033 0.00013 0.0133
720      0       0       0       0       0       0       0       0       0
end_to_control_volume
to_control_volume SP
Time N_Gas I_Grp CsGrp TeGrp BaGrp NMtls CeGrp LaGrp SrGrp
0.033    0       0       0       0       0       0       0       0       0
0.533    0       0.2     0       0       0       0       0       0       0
2.033    0       0.334   0       0       0       0       0       0       0
720      0       0       0       0       0       0       0       0       0
end_to_control_volume
end_release_frac
end_core

control_volume
obj_type                         OBJ_CV
name                             DW
air_volume                       1.8e+005
water_volume                     0
surface_area                     1
has_recirc_filter                false
removal_rate_to_surface
```

Project: Nine Mile Point Nuclear Station Unit: __1_ Disposition: ____

Originator/Date	Reviewer/Date	Calculation No.	Revision
H. Pustulka 12/12/06	D. Leaver 12/12/06	H21C092	00

Ref.

Time	NobleGas	Elemiodine		Orgiodine	Partiodine	Solubles	Insolubles
0.0617	0.0000	20.000	0.000	59.045	59.045	59.045	
0.5164	0.0000	20.000	0.000	21.126	21.126	21.126	
0.5446	0.0000	20.000	0.000	34.874	34.874	34.874	
0.8368	0.0000	20.000	0.000	24.969	24.969	24.969	
2.0176	0.0000	20.000	0.000	21.706	21.706	21.706	
2.9647	0.0000	5.014	0.000	5.014	5.014	5.014	
4.8038	0.0000	2.961	0.000	2.961	2.961	2.961	
13.0189	0.0000	1.990	0.000	1.990	1.990	1.990	
720.0000	0.0000	0.000	0.000	0.000	0.000	0.000	

end_removai_rate_to_surface
frac_4_daughter_resusp_from_surface

Time	NobleGas	Elemiodine		Orgiodine	Partiodine	Solubles	Insolubles
720	1	0	0	0	0	0	

end_frac_4_daughter_resusp_from_surface
end_control_volume

control_volume
obj_type OBJ_CV
name WW
air_volume 1.2e+005
water_volume 7.97e+004
surface_area 0
has_recirc_filter false
removal_rate_to_waterpool

Time	NobleGas	Elemiodine		Orgiodine	Partiodine	Solubles	Insolubles
720	0	0	0	0	0	0	

end_removal_rate_to_waterpool
frac_4_daughter_resusp_from_water

Time	NobleGas	Elemiodine		Orgiodine	Partiodine	Solubles	Insolubles
720	0	0	0	0	0	0	

end_frac_4_daughter_resusp_from_water
decontamination_factor

Time	NobleGas	Elemiodine		Orgiodine	Partiodine	Solubles	Insolubles
720	1	1	1	1	1	1	

end_decontamination_factor
end_control_volume

control_volume
obj_type OBJ_CV
name SL1
air_volume 82.4
water_volume 0
surface_area 0
has_recirc_filter false
removal_rate_to_surface

Time	NobleGas	Elemiodine		Orgiodine	Partiodine	Solubles	Insolubles
0.0435	0.0000	0.000	0.000	1.341	1.341	1.341	
0.2927	0.0000	0.000	0.000	1.236	1.236	1.236	
0.5614	0.0000	0.000	0.000	0.852	0.852	0.852	
1.2155	0.0000	0.000	0.000	0.762	0.762	0.762	
2.2325	0.0000	0.000	0.000	0.835	0.835	0.835	
4.8498	0.0000	0.000	0.000	0.720	0.720	0.720	
7.6680	0.0000	0.000	0.000	0.519	0.519	0.519	
20.4528	0.0000	0.000	0.000	0.339	0.339	0.339	
720.0000	0.0000	0.000	0.000	0.000	0.000	0.000	

Ref.

```
end_removal_rate_to_surface
frac_4_daughter_resusp_from_surface
Time      NobleGas Elemlodine      Orglodine Partlodine Solubles  Insolubles
720       1        0       0       0         0         0
end_frac_4_daughter_resusp_from_surface
end_control_volume


control_volume
obj_type                          OBJ_CV
name                              RB
air_volume                1.06e+006
water_volume                      0
surface_area                      0
has_recirc_filter                 false
end_control_volume

control_volume
obj_type                          OBJ_CV
name                              RB'
air_volume                2.67
water_volume                      0
surface_area                      0
has_recirc_filter                 false
end_control_volume

control_volume
obj_type                          OBJ_CV
name                              SP
air_volume                7.97e+004
water_volume                      0
surface_area                      0
has_recirc_filter                 false
end_control_volume

control_volume
obj_type                          OBJ_CR
name                              Control_Room
air_volume                1.35e+005
water_volume                      0
surface_area                      0
has_recirc_filter                 false
breathing_rate
Time      (hr)      Value     (cms)
720                 0.00035
end_breathing_rate
occupancy_factor
Time      (hr)      Value     (frac)
24                  1
96                  0.6
720                 0.4
end_occupancy_factor
end_control_volume


junction
```

Ref.

```
junction_type                    AIR_JUNCTION
downstream_location              AIR_SPACE
upstream                         CORE
downstream                       DW
has_filter                       false
flow_rate
Time      (hr)      Value      (cfm)
720                 1
end_flow_rate
end_junction

junction
junction_type                    AIR_JUNCTION
downstream_location              AIR_SPACE
upstream                         CORE
downstream                       SP
has_filter                       false
flow_rate
Time      (hr)      Value      (cfm)
720                 1
end_flow_rate
end_junction

junction
junction_type                    AIR_JUNCTION
downstream_location              WATER_POOL
upstream                         DW
downstream                       WW
has_filter                       false
flow_rate
Time      (hr)      Value      (cfm)
2.033               0
720                 1.8e5
end_flow_rate
end_junction

junction
junction_type                    AIR_JUNCTION
downstream_location              AIR_SPACE
upstream                         WW
downstream                       DW
has_filter                       false
flow_rate
Time      (hr)      Value      (cfm)
2.033               0
720                 1.8e5
end_flow_rate
end_junction

junction
junction_type                    AIR_JUNCTION
downstream_location              AIR_SPACE
upstream                         DW
downstream                       SL1
has_filter                       true
flow_rate
```

Ref.

```
Time        (hr)        Value       (cfm)
24                      0.342
720                     0.171
end_flow_rate
filter_efficiency
Time        NobleGas    Elemlodine          Orglodine   Partlodine  Solubles    Insolubles
720         0           0.5         0       0.5         0.5         0.5
end_filter_efficiency
frac_4_daughter_resusp
Time        NobleGas    Elemlodine          Orglodine   Partlodine  Solubles    Insolubles
720         1           0           0       0           0           0
end_frac_4_daughter_resusp
end_junction

junction
junction_type                           AIR_JUNCTION
downstream_location             AIR_SPACE
upstream                                SL1
downstream                      environment
has_filter                              false
flow_rate
Time        (hr)        Value       (cfm)
24                      0.398
720                     0.199
end_flow_rate
X_over_Q_4_ctrl_room
Time        (hr)        Value       (s/m*3)
0.667                   5.85e-4
2.667                   1.03e-3
8.033                   5.85e-4
24                      2.07e-4
96                      1.75e-4
720                     1.52e-4
end_X_over_Q_4_ctrl_room
X_over_Q_4_site_boundary
Time        (hr)        Value       (s/m*3)
0.667                   0
2.667                   1.90e-4
720                     0
end_X_over_Q_4_site_boundary
X_over_Q_4_low_population_zone
Time        (hr)        Value       (s/m*3)
8.033                   1.63e-5
24                      1.10e-5
96                      4.67e-6
720                     1.37e-6
end_X_over_Q_4_low_population_zone
end_junction


junction
junction_type                           AIR_JUNCTION
downstream_location             AIR_SPACE
upstream                                DW
downstream                      environment
has_filter                              false
```

Ref.

```
flow_rate
Time        (hr)        Value       (cfm)
24                      0.342
720                     0.171
end_flow_rate
X_over_Q_4_ctrl_room
Time        (hr)        Value       (s/m*3)
0.667                   5.85e-4
2.667                   1.03e-3
8.033                   5.85e-4
24                      2.07e-4
96                      1.75e-4
720                     1.52e-4
end_X_over_Q_4_ctrl_room
X_over_Q_4_site_boundary
Time        (hr)        Value       (s/m*3)
0.667                   0
2.667                   1.90e-4
720                     0
end_X_over_Q_4_site_boundary
X_over_Q_4_low_population_zone
Time        (hr)        Value       (s/m*3)
8.033                   1.63e-5
24                      1.10e-5
96                      4.67e-6
720                     1.37e-6
end_X_over_Q_4_low_population_zone
end_junction

junction
junction_type                       AIR_JUNCTION
downstream_location         AIR_SPACE
upstream                            DW
downstream                  environment
has_filter                          true
flow_rate
Time        (hr)        Value       (cfm)
0.667                   2.159
24                      0.284
720                     0.142
end_flow_rate
filter_efficiency
Time        NobleGas    Elemiodine          Orgiodine   Partiodine  Solubles    Insolubles
0.667       0           0.066       0       0.066       0.066       0.066
720         0           0.5         0       0.5         0.5         0.5
end_filter_efficiency
frac_4_daughter_resusp
Time        NobleGas    Elemiodine          Orgiodine   Partiodine  Solubles    Insolubles
720         1           0           0       0           0           0
end_frac_4_daughter_resusp
X_over_Q_4_ctrl_room
Time        (hr)        Value       (s/m*3)
0.667                   3.04e-4
2.667                   5.54e-4
6           3.04e-4
8.033                   5.85e-4
```

Ref.

```
24                  2.07e-4
96                  1.75e-4
720                 1.52e-4
end_X_over_Q_4_ctrl_room
X_over_Q_4_site_boundary
Time        (hr)    Value       (s/m*3)
0.667               0
2.667               1.90e-4
720                 0
end_X_over_Q_4_site_boundary
X_over_Q_4_low_population_zone
Time        (hr)    Value       (s/m*3)
8.033               1.63e-5
24                  1.10e-5
96                  4.67e-6
720                 1.37e-6
end_X_over_Q_4_low_population_zone
end_junction

junction
junction_type                   AIR_JUNCTION
downstream_location             AIR_SPACE
upstream                        WW
downstream                      environment
has_filter                      false
flow_rate
Time        (hr)    Value       (cfm)
0.667               1.25
720                 0.0
end_flow_rate
X_over_Q_4_ctrl_room
Time        (hr)    Value       (s/m*3)
0.667               2.61e-4
2.667               4.82e-4
8.033               2.61e-4
24                  9.25e-5
96                  6.7e-5
720                 4.93e-5
end_X_over_Q_4_ctrl_room
X_over_Q_4_site_boundary
Time        (hr)    Value       (s/m*3)
0.667               0
2.667               1.90e-4
720                 0
end_X_over_Q_4_site_boundary
X_over_Q_4_low_population_zone
Time        (hr)    Value       (s/m*3)
8.033               1.63e-5
24                  1.10e-5
96                  4.67e-6
720                 1.37e-6
end_X_over_Q_4_low_population_zone
end_junction

junction
junction_type                   AIR_JUNCTION
```

Ref.

```
downstream_location          AIR_SPACE
upstream                             SP
downstream                   RB'
has_filter                           true
flow_rate
Time      (hr)      Value     (cfm)
0.667               2.67
720                 0
end_flow_rate
filter_efficiency
Time      NobleGas  ElemIodine        OrgIodine  PartIodine  Solubles  Insolubles
720       0.5       0.0       0.0     1.0        0           0
end_filter_efficiency
end_junction

junction
junction_type                        AIR_JUNCTION
downstream_location          AIR_SPACE
upstream                             RB'
downstream                   environment
has_filter                           false
flow_rate
Time      (hr)      Value     (cfm)
0.667               2.67
720                 0
end_flow_rate
X_over_Q_4_ctrl_room
Time      (hr)      Value     (s/m*3)
0.667               2.61e-4
2.667               4.82e-4
8         2.61e-4
24                  9.25e-5
96                  6.7e-5
720                 4.93e-5
end_X_over_Q_4_ctrl_room
X_over_Q_4_site_boundary
Time      (hr)      Value     (s/m*3)
0.667               0
2.667               1.90e-4
720                 0
end_X_over_Q_4_site_boundary
X_over_Q_4_low_population_zone
Time      (hr)      Value     (s/m*3)
8.033               1.63e-5
24                  1.10e-5
96                  4.67e-6
720                 1.37e-6
end_X_over_Q_4_low_population_zone
end_junction

junction
junction_type                        AIR_JUNCTION
downstream_location          AIR_SPACE
upstream                             DW
downstream                   RB
has_filter                           false
```

Ref.

```
flow_rate
Time        (hr)        Value       (cfm)
0.667                   0
24                      1.875
720                     0.934
end_flow_rate
end_junction

junction
junction_type                       AIR_JUNCTION
downstream_location         AIR_SPACE
upstream                    WW
downstream                          RB
has_filter                  false
flow_rate
Time        (hr)        Value       (cfm)
0.667                   0
24                      1.25
720                     0.625
end_flow_rate
end_junction

junction
junction_type                       AIR_JUNCTION
downstream_location         AIR_SPACE
upstream                            SP
downstream                  RB
has_filter                          true
flow_rate
Time        (hr)        Value       (cfm)
0.667                   0
720                     2.67
end_flow_rate
filter_efficiency
Time        NobleGas Elemiodine         Orgiodine Partiodine Solubles   Insolubles
720         0.5      0.0        0.0     1.0       0          0
end_filter_efficiency
end_junction

junction
junction_type                       AIR_JUNCTION
downstream_location         AIR_SPACE
upstream                            RB
downstream                  environment
has_filter                          true
flow_rate
Time        (hr)        Value       (cfm)
720                     1600
end_flow_rate
filter_efficiency
Time        NobleGas Elemiodine         Orgiodine Partiodine Solubles   Insolubles
0.667       0        0          0       0         0          0
720         0        0.95       0.9     0.95      0.95       0.95
end_filter_efficiency
frac_4_daughter_resusp
Time        NobleGas Elemiodine         Orgiodine Partiodine Solubles   Insolubles
```

Ref.

```
720     1     1     0     0     0     0
end_frac_4_daughter_resusp
X_over_Q_4_ctrl_room
Time    (hr)    Value   (s/m*3)
0.667           1.26E-4
2.667           2.27E-4
8.033           1.26E-4
24              4.30E-5
96              3.58E-5
720             2.59E-5
end_X_over_Q_4_ctrl_room
X_over_Q_4_site_boundary
Time    (hr)    Value   (s/m*3)
0.667           0
2.667           5.98e-5
720             0
end_X_over_Q_4_site_boundary
X_over_Q_4_low_population_zone
Time    (hr)    Value   (s/m*3)
0.167           2.12e-5
4.167           1.26e-6
8.033           2.12e-5
24              8.40e-7
96              3.45e-7
720             1.11e-7
end_X_over_Q_4_low_population_zone
end_junction

junction
junction_type                   AIR_JUNCTION
downstream_location             AIR_SPACE
upstream                        environment
downstream                      Control_Room
has_filter                      true
flow_rate
Time    (hr)    Value   (cfm)
720     2025
end_flow_rate
filter_efficiency
Time    NobleGas Elemiodine     Orgiodine Partiodine Solubles  Insolubles
720     0       0.95    0.9     0.95      0.95       0.95
end_filter_efficiency
frac_4_daughter_resusp
Time    NobleGas Elemiodine     Orgiodine Partiodine Solubles  Insolubles
720     1       1       0       0         0          0
end_frac_4_daughter_resusp
end_junction

junction
junction_type                   AIR_JUNCTION
downstream_location             AIR_SPACE
upstream                        environment
downstream                      Control_Room
has_filter                      false
flow_rate
Time    (hr)    Value   (cfm)
```

Ref.

```
720        100
end_flow_rate
end_junction

junction
junction_type                    AIR_JUNCTION
downstream_location          AIR_SPACE
upstream                         Control_Room
downstream                   environment
has_filter                       false
flow_rate
Time       (hr)       Value      (cfm)
720        2125
end_flow_rate
X_over_Q_4_ctrl_room
Time       (hr)       Value      (s/m*3)
720        0
end_X_over_Q_4_ctrl_room
X_over_Q_4_site_boundary
Time       (hr)       Value      (s/m*3)
720        0
end_X_over_Q_4_site_boundary
X_over_Q_4_low_population_zone
Time       (hr)       Value      (s/m*3)
720        0
end_X_over_Q_4_low_population_zone
end_junction

environment
breathing_rate_sb
Time       (hr)       Value      (cms)
8.033                 0.00035
720                   0.0
end_breathing_rate_sb
breathing_rate_lpz
Time       (hr)       Value      (cms)
8.033                 0.00035
24                    0.00018
720                   0.00023
end_breathing_rate_lpz
end_environment
```

Appendix E7: RESULTS.OUT File for Case 1B (Core Spray MSIV Failure)

```
edit time 720.000000

Control_Room

              thyroid     wbody       skin        CEDE
Total dose:   0.00E+000   4.63E-001   0.00E+000   1.52E+000
Noble gas     0.00E+000   4.53E-001   0.00E+000   2.90E-001
Org iodine    0.00E+000   1.95E-004   0.00E+000   1.79E-001
Elem iodine   0.00E+000   9.74E-003   0.00E+000   6.65E-001
Part iodine   0.00E+000   8.27E-004   0.00E+000   2.30E-001
```

Ref.

```
Cesium        0.00E+000  7.33E-005  0.00E+000  8.13E-002
Tellurium     0.00E+000  1.74E-005  0.00E+000  1.32E-002
Barium        0.00E+000  1.24E-005  0.00E+000  2.15E-003
Noble metal   0.00E+000  1.93E-006  0.00E+000  1.37E-002
Lanthanides   0.00E+000  1.99E-006  0.00E+000  8.38E-003
Cerium        0.00E+000  7.41E-007  0.00E+000  2.85E-002
Strontinum    0.00E+000  1.42E-005  0.00E+000  1.40E-002

environment

             thyroid    wbody      skin       CEDE
EAB dose:    0.00E+000  8.80E-001  0.00E+000  6.70E-001
LPZ dose:    0.00E+000  4.39E-001  0.00E+000  3.21E-001

STARDOSE 1.01 (c) 1996-2002 Polestar Applied Technology, Inc.
Sun Dec 10 21:14:27 2006

Total elapsed hours: 0, mins: 7, secs: 45
```

Ref.

Appendix F Reactor Building Integrated Airborne Specific Activities (8 Pages)

(Integrated 0-30d post using LOCA source term for the RB atmosphere)

Background/Methodology

A spreadsheet methodology was used to determine airborne activity concentration in the reactor building from output generated by the STARDOSE computer code [Ref F-1]. STARDOSE provides the curies resulting from each of the 76 radionuclides analyzed in the reactor building (RB) as a function of edit time. Integrating curies over time, (multiplying total curies by Δt) and applying the appropriate occupancy factors provides an occupancy weighted Ci-hr value for each radionuclide. Converting from curies to disintegrations per second, and hours to seconds gives values in disintegrations. These results are multiplied by the nuclide specific MeV/dis values for each energy level. The sum of these results by nuclide provide the total MeV in the reactor building. Dividing by the RB volume allows the calculation of MeV/cc for each of the six energy levels.

Calculation

An Excel spreadsheet was used to carry out the calculation. The spreadsheet was created to accommodate the STARDOSE edit time. These times are: every 15 minutes from 25 min to 190 min, 3.667, 4.167, 6, 8.033, 24, 48, 96, 240 and 720 hours after the accident. It should be noted that no activity accumulates in the RB before drawdown. For ease of presenting this calculation, edit times before 6 hours (drawdown) have been omitted. (These values are all zero, and omission does not change results).

Data Table F1.1 provides MeV/dis values for the radionuclides at six energy levels. These values were taken from Reference F-2. Typically short-lived decay daughters are included when (1) the daughter has a half-life less than 90 minutes and (2) the daughter has a half-life less than 0.1 times the parent. Even though the half-life of Rb-88 (17.8 minutes) is slightly greater than 10% of its parent Kr-88 (170.4 minutes) an exception has been made for Rb88 because of its importance as a decay daughter. Therefore the MeV/dis values for Rb-88 have been added to those for Kr-88 so its contribution can be monitored in this analysis.

Data Table F1.2 presents the STARDOSE output values (Ci in RB airspace) for the times 0, 6, 8.033, 24, 48, 96, 240 and 720 hours [STARDOSE input used from Appendix E-2.2]

Table F1.3 has the following format by column:

1. Integrate curies over time. The sum of the curies at each time step multiplied by the respective Δt. Occupancy factors are applied based on time step. Occupancy factor values of 100% for the first day, 60% for days two through four, and 40% for four to 30 days were used per Reference F-3, Item 5.5.
2. Integrated Ci-hrs are converted to Ci-sec. (1 hr = 3600 sec).
3. Ci-sec are converted to disintegrations, (1 Ci = 3.7E10 dis/sec).

4. Multiplying the total disintegrations for each nuclide by its corresponding MeV/dis value for E1 found in Table F1.1. This results in a MeV energy value.
5. Identical to column four except calculation is carried out for the E2 energy level.
6. Identical to column four except calculation is carried out for the E3 energy level.
7. Identical to column four except calculation is carried out for the E4 energy level.
8. Identical to column four except calculation is carried out for the E5 energy level.
9. Identical to column four except calculation is carried out for the E6 energy level.

The last row of Table F1.3 (in bold text) sums all radionuclide values calculated in columns 4-9 to give a total MeV by energy level in the RB. Dividing the total MeV by the volume of the RB in cm^3 gives MeV/cc values.

Summary

The calculation provides source strength values for the RB by energy level, as can be seen in the table below. These inputs can be used in the QAD computer code [Ref F-4] as discussed in Appendix G.

RB activity concentrations

	Energy (MeV)		Integrated Activity	
	Interval	mdpt	(MeV-sec/ cc-sec)	With Occupancy Factor
E1	0-.3	0.2	1.30E+10	**8.60E+09**
E2	.3-.5	0.4	4.84E+09	**2.71E+09**
E3	.5-1	0.75	3.36E+09	**2.47E+09**
E4	1-1.5	1.25	5.78E+08	**5.19E+08**
E5	1.5-2	1.75	2.13E+08	**2.06E+08**
E6	2+	2.5	1.56E+08	**1.55E+08**

References

F-1 STARDOSE Model report, Polestar Applied Technology, Inc., Rev. 1, March 2002.

F-2 Memorandum "Generalization of Spreadsheet Methodology for Comparing TID-14844 and AST Gamma Shine Dose Potential" Prepared by James Metcalf 7/27/03.

F-3 PSAT 4026CF.QA.03, "Design Data Base for Application of the Alternative DBA Source Term to Nine Mile Point Unit 1" Revision 0

F-4 "QADMOD-GP: Point Kernel Gamma-Ray Shielding Code With Geometric Progression Buildup Factors", RSIC Code Package CCC-565.

Ref.

Appendix F1: Referenced Data tables

Table F1.1: GAMEN Energy Data Table*

Energy Group	E1	E2	E3	E4	E5	E6
Energy	(0 to 0.3)	(0.3 to 0.5)	(0.5 to 1)	(1 to 1.5)	(1.5 to 2)	(2+)
Kr83m	2.57E-03	0.00E+00	0.00E+00	0.00E+00	0.00E+00	0.00E+00
Kr85m	1.15E-01	4.27E-02	1.20E-04	0.00E+00	0.00E+00	0.00E+00
Kr85	0.00E+00	0.00E+00	2.23E-03	0.00E+00	0.00E+00	0.00E+00
Kr87	2.00E-05	1.99E-01	8.33E-02	2.76E-02	5.79E-02	4.25E-01
Kr88**	5.87E-02	1.55E-02	2.66E-01	1.28E-01	6.20E-01	1.50E+00
Kr89	5.03E-02	8.84E-02	3.77E-01	2.84E-01	3.35E-01	7.00E-01
Xe131m	2.01E-02	0.00E+00	0.00E+00	0.00E+00	0.00E+00	0.00E+00
Xe133m	4.15E-02	0.00E+00	0.00E+00	0.00E+00	0.00E+00	0.00E+00
Xe133	4.53E-02	0.00E+00	0.00E+00	0.00E+00	0.00E+00	0.00E+00
Xe135m	4.18E-03	0.00E+00	4.27E-01	0.00E+00	0.00E+00	0.00E+00
Xe135	2.27E-01	2.25E-03	1.90E-02	0.00E+00	0.00E+00	0.00E+00
Xe137	4.50E-04	1.40E-01	7.23E-03	2.36E-02	1.09E-02	5.16E-03
Xe138	1.02E-01	1.24E-01	3.18E-02	6.16E-02	3.44E-01	4.62E-01
I131Org	2.12E-02	2.97E-01	6.25E-02	0.00E+00	0.00E+00	0.00E+00
I132Org	7.10E-03	1.37E-02	1.89E+00	3.14E-01	2.80E-02	3.76E-02
I133Org	1.41E-03	2.71E-03	5.45E-01	5.80E-02	0.00E+00	0.00E+00
I134Org	1.40E-02	6.84E-02	1.86E+00	3.91E-01	2.72E-01	1.73E-02
I135Org	1.47E-02	2.27E-02	1.30E-01	9.33E-01	4.20E-01	5.46E-02
I131Elem	2.12E-02	2.97E-01	6.25E-02	0.00E+00	0.00E+00	0.00E+00
I132Elem	7.10E-03	1.37E-02	1.89E+00	3.14E-01	2.80E-02	3.76E-02
I133Elem	1.41E-03	2.71E-03	5.45E-01	5.80E-02	0.00E+00	0.00E+00
I134Elem	1.40E-02	6.84E-02	1.86E+00	3.91E-01	2.72E-01	1.73E-02
I135Elem	1.47E-02	2.27E-02	1.30E-01	9.33E-01	4.20E-01	5.46E-02
I131Part	2.12E-02	2.97E-01	6.25E-02	0.00E+00	0.00E+00	0.00E+00
I132Part	7.10E-03	1.37E-02	1.89E+00	3.14E-01	2.80E-02	3.76E-02
I133Part	1.41E-03	2.71E-03	5.45E-01	5.80E-02	0.00E+00	0.00E+00
I134Part	1.40E-02	6.84E-02	1.86E+00	3.91E-01	2.72E-01	1.73E-02
I135Part	1.47E-02	2.27E-02	1.30E-01	9.33E-01	4.20E-01	5.46E-02
Rb86	0.00E+00	0.00E+00	0.00E+00	9.45E-02	0.00E+00	0.00E+00
Cs134	3.50E-04	6.94E-03	1.47E+00	7.29E-02	0.00E+00	0.00E+00
Cs136	9.98E-02	1.67E-01	8.24E-01	1.08E+00	0.00E+00	0.00E+00
Cs137	2.31E-03	0.00E+00	5.63E-01	0.00E+00	0.00E+00	0.00E+00
Sb127	3.09E-02	1.58E-01	4.64E-01	8.54E-03	0.00E+00	0.00E+00
Sb129	1.10E-02	2.69E-02	9.50E-01	2.45E-01	1.76E-01	2.00E-02
Te127m	1.12E-02	0.00E+00	7.00E-05	0.00E+00	0.00E+00	0.00E+00
Te127	2.20E-04	4.61E-03	0.00E+00	0.00E+00	0.00E+00	0.00E+00
Te129m	8.10E-03	0.00E+00	3.13E-02	0.00E+00	0.00E+00	0.00E+00
Te129	7.87E-03	3.90E-02	3.90E-03	6.88E-03	0.00E+00	0.00E+00
Te131m	7.55E-02	6.37E-02	8.58E-01	3.26E-01	4.60E-02	5.66E-02
Te132	2.31E-01	0.00E+00	0.00E+00	0.00E+00	0.00E+00	0.00E+00
Ba137m						
Ba139	2.99E-02	0.00E+00	0.00E+00	5.32E-03	0.00E+00	0.00E+00
Ba140	1.70E-02	3.69E-02	1.37E-01	0.00E+00	0.00E+00	0.00E+00
Mo99	1.76E-02	5.02E-03	1.32E-01	0.00E+00	0.00E+00	0.00E+00

Ref.

Table F1.1: GAMEN Energy Data Table (cont.)

Energy Group	E1	E2	E3	E4	E5	E6
Energy	(0 to 0.3)	(0.3 to 0.5)	(0.5 to 1)	(1 to 1.5)	(1.5 to 2)	(2+)
Tc99m	1.27E-01	0.00E+00	0.00E+00	0.00E+00	0.00E+00	0.00E+00
Ru103	1.12E-03	4.44E-01	3.88E-02	0.00E+00	0.00E+00	0.00E+00
Ru105	5.76E-02	1.79E-01	5.76E-01	6.50E-03	0.00E+00	0.00E+00
Ru106	0.00E+00	0.00E+00	1.74E-01	3.05E-02	2.45E-03	0.00E+00
Rh105	7.30E-04	7.69E-02	0.00E+00	0.00E+00	0.00E+00	0.00E+00
Y90	0.00E+00	0.00E+00	0.00E+00	0.00E+00	0.00E+00	0.00E+00
Y91	0.00E+00	0.00E+00	0.00E+00	3.61E-03	0.00E+00	0.00E+00
Y92	0.00E+00	1.29E-02	1.60E-01	7.00E-02	9.15E-03	0.00E+00
Y93	1.83E-02	0.00E+00	2.26E-02	1.41E-02	2.70E-02	7.14E-03
Zr95	0.00E+00	0.00E+00	7.35E-01	0.00E+00	0.00E+00	0.00E+00
Zr97	4.58E-03	1.05E-02	6.07E-02	7.47E-02	3.01E-02	0.00E+00
Nb95	2.00E-05	1.10E-04	7.64E-01	0.00E+00	0.00E+00	0.00E+00
La140	4.09E-03	3.02E-01	3.71E-01	5.03E-03	1.52E+00	1.10E-01
La141	0.00E+00	0.00E+00	0.00E+00	3.55E-02	7.20E-03	0.00E+00
La142	4.30E-04	3.72E-03	4.56E-01	2.23E-01	3.84E-01	1.65E+00
Pr143	0.00E+00	0.00E+00	0.00E+00	0.00E+00	0.00E+00	0.00E+00
Nd147	4.71E-02	1.64E-02	7.73E-02	0.00E+00	0.00E+00	0.00E+00
Am241	2.81E-02	0.00E+00	0.00E+00	0.00E+00	0.00E+00	0.00E+00
Cm242	1.67E-03	0.00E+00	0.00E+00	0.00E+00	0.00E+00	0.00E+00
Cm244	1.49E-03	0.00E+00	0.00E+00	0.00E+00	0.00E+00	0.00E+00
Ce141	7.69E-02	0.00E+00	0.00E+00	0.00E+00	0.00E+00	0.00E+00
Ce143	1.59E-01	2.35E-02	8.69E-02	4.03E-03	0.00E+00	0.00E+00
Ce144	1.93E-02	0.00E+00	0.00E+00	0.00E+00	0.00E+00	0.00E+00
Np239	1.60E-01	1.18E-02	0.00E+00	0.00E+00	0.00E+00	0.00E+00
Pu238	1.60E-03	0.00E+00	0.00E+00	0.00E+00	0.00E+00	0.00E+00
Pu239	6.50E-04	0.00E+00	0.00E+00	0.00E+00	0.00E+00	0.00E+00
Pu240	1.53E-03	0.00E+00	0.00E+00	0.00E+00	0.00E+00	0.00E+00
Pu241	0.00E+00	0.00E+00	0.00E+00	0.00E+00	0.00E+00	0.00E+00
Sr89	0.00E+00	0.00E+00	1.40E-04	0.00E+00	0.00E+00	0.00E+00
Sr90	0.00E+00	0.00E+00	0.00E+00	0.00E+00	0.00E+00	0.00E+00
Sr91	4.59E-03	5.40E-04	3.10E-01	3.64E-01	7.36E-03	0.00E+00
Sr92	7.17E-03	1.56E-02	3.79E-02	1.28E+00	0.00E+00	0.00E+00

*Table from Reference 2

**Kr88 energy values were edited to accommodate the presence of Rb88.

Project: Nine Mile Point Nuclear Station Unit: _1__ Disposition: ____

Originator/Date	Reviewer/Date	Calculation No.	Revision
Heather Pustulka 12/12/06	J. Metcalf 12/12/06/ D.Leaver 12/12/06	H21C092	00

Ref.

Table F1.2: STARDOSE Output in Ci

t (hrs)	0	6	8.033	24	48	96	240	720
Kr83m	0.00E+00	0.00E+00	3.42E+02	3.88E+00	2.93E-04	3.54E-12	7.72E-36	1.01E-114
Kr85m	0.00E+00	0.00E+00	4.28E+03	1.72E+03	2.74E+01	1.49E-02	2.93E-12	1.30E-44
Kr85	0.00E+00	0.00E+00	8.56E+02	4.06E+03	2.67E+03	2.44E+03	2.30E+03	1.88E+03
Kr87	0.00E+00	0.00E+00	3.59E+02	2.90E-01	4.11E-07	1.95E-18	1.68E-52	6.61E-166
Kr88	0.00E+00	0.00E+00	5.61E+03	5.40E+02	1.01E+00	7.59E-06	4.01E-21	4.23E-72
Kr89	0.00E+00	0.00E+00	1.26E-41	1.51E-131	6.59E-268	6.32E-322	6.32E-322	6.32E-322
Xe131m	0.00E+00	0.00E+00	6.49E+02	2.96E+03	1.84E+03	1.50E+03	9.95E+02	2.55E+02
Xe133m	0.00E+00	0.00E+00	3.19E+03	1.23E+04	5.87E+03	2.85E+03	4.01E+02	5.80E-01
Xe133	0.00E+00	0.00E+00	1.14E+05	5.17E+05	3.39E+05	2.60E+05	1.08E+05	5.67E+03
Xe135m	0.00E+00	0.00E+00	7.60E-06	4.83E-24	1.36E-52	2.30E-109	1.35E-279	3.03E-321
Xe135	0.00E+00	0.00E+00	5.20E+04	1.27E+05	3.11E+04	1.03E+03	1.50E-02	9.37E-19
Xe137	0.00E+00	0.00E+00	7.03E-33	4.34E-106	2.50E-217	7.41E-322	7.41E-322	7.41E-322
Xe138	0.00E+00	0.00E+00	2.83E-04	1.42E-20	2.84E-46	2.43E-97	1.84E-250	3.61E-321
I131Org	0.00E+00	0.00E+00	1.91E+02	8.46E+02	8.52E+02	6.66E+02	3.04E+02	2.30E+01
I132Org	0.00E+00	0.00E+00	2.53E+01	9.65E-01	7.66E-04	3.72E-10	4.08E-29	2.67E-92
I133Org	0.00E+00	0.00E+00	3.06E+02	8.43E+02	4.15E+02	7.79E+01	4.90E-01	2.34E-08
I134Org	0.00E+00	0.00E+00	7.55E-01	1.14E-05	6.96E-14	2.00E-30	4.51E-80	1.52E-245
I135Org	0.00E+00	0.00E+00	1.61E+02	1.42E+02	1.26E+01	7.68E-02	1.65E-08	1.02E-30
I131Elem	0.00E+00	0.00E+00	5.34E+03	2.36E+04	2.53E+04	1.98E+04	8.84E+03	6.00E+02
I132Elem	0.00E+00	0.00E+00	7.07E+02	2.70E+01	2.40E-02	1.46E-05	1.11E-06	1.30E-08
I133Elem	0.00E+00	0.00E+00	8.55E+03	2.35E+04	1.23E+04	2.32E+03	1.43E+01	6.11E-07
I134Elem	0.00E+00	0.00E+00	2.11E+01	3.18E-04	2.07E-12	5.94E-29	1.31E-78	3.95E-244
I135Elem	0.00E+00	0.00E+00	4.51E+03	3.97E+03	3.75E+02	2.28E+00	4.80E-07	2.65E-29
I131Part	0.00E+00	0.00E+00	2.01E-01	4.99E-02	5.23E-03	7.96E-05	1.29E-05	1.89E-06
I132Part	0.00E+00	0.00E+00	2.65E-02	5.69E-05	4.70E-09	4.47E-17	1.75E-36	2.21E-99
I133Part	0.00E+00	0.00E+00	3.21E-01	4.97E-02	2.55E-03	9.32E-06	2.09E-08	1.93E-15
I134Part	0.00E+00	0.00E+00	7.93E-04	6.72E-10	4.27E-19	2.39E-37	1.93E-87	1.26E-252
I135Part	0.00E+00	0.00E+00	1.69E-01	8.38E-03	7.75E-05	9.18E-09	7.02E-16	8.94E-38
Rb86	0.00E+00	0.00E+00	4.60E-04	1.18E-04	1.30E-05	2.19E-07	4.76E-08	1.86E-08
Cs134	0.00E+00	0.00E+00	4.66E-02	1.22E-02	1.40E-03	2.53E-05	6.84E-06	5.52E-06
Cs136	0.00E+00	0.00E+00	1.43E-02	3.64E-03	3.94E-04	6.42E-06	1.27E-06	3.63E-07
Cs137	0.00E+00	0.00E+00	2.78E-02	7.31E-03	8.36E-04	1.51E-05	4.12E-06	3.38E-06
Sb127	0.00E+00	0.00E+00	4.49E-03	1.05E-03	1.00E-04	1.27E-06	1.17E-07	2.65E-09
Sb129	0.00E+00	0.00E+00	3.89E-03	7.88E-05	1.91E-07	1.56E-12	3.85E-23	1.07E-56
Te127m	0.00E+00	0.00E+00	6.41E-04	1.68E-04	1.91E-05	3.41E-07	8.93E-08	6.46E-08
Te127	0.00E+00	0.00E+00	4.28E-03	1.11E-03	1.10E-04	1.41E-06	1.30E-07	2.94E-09
Te129m	0.00E+00	0.00E+00	2.05E-03	5.31E-04	5.95E-05	1.03E-06	2.48E-07	1.35E-07
Te129	0.00E+00	0.00E+00	5.05E-03	1.08E-04	2.61E-07	2.13E-12	5.26E-23	1.46E-56
Te131m	0.00E+00	0.00E+00	5.23E-03	9.51E-04	6.24E-05	3.73E-07	3.64E-09	4.54E-14
Te132	0.00E+00	0.00E+00	5.68E-02	1.30E-02	1.20E-03	1.42E-05	1.08E-06	1.26E-08
Ba137m	0.00E+00	0.00E+00	2.78E-02	7.31E-03	8.36E-04	1.51E-05	4.12E-06	3.38E-06
Ba139	0.00E+00	0.00E+00	5.45E-04	4.59E-08	2.93E-14	1.66E-26	1.37E-58	9.69E-164
Ba140	0.00E+00	0.00E+00	2.95E-02	7.50E-03	8.12E-04	1.32E-05	2.59E-06	7.16E-07
Mo99	0.00E+00	0.00E+00	3.78E-03	8.42E-04	7.47E-05	8.17E-07	4.89E-08	2.59E-10
Tc99m	0.00E+00	0.00E+00	3.38E-03	8.93E-04	8.20E-05	8.99E-07	5.38E-08	2.85E-10
Ru103	0.00E+00	0.00E+00	3.42E-03	8.90E-04	9.99E-05	1.75E-06	4.28E-07	2.47E-07
Ru105	0.00E+00	0.00E+00	6.88E-04	1.49E-05	4.02E-08	4.03E-13	1.86E-23	4.11E-56

Ref.

Table F1.2: STARDOSE Output in Ci (cont.)

t (hrs)	0	6	8.033	24	48	96	240	720
Ru106	0.00E+00	0.00E+00	2.38E-03	1.01E-02	6.61E-03	6.03E-03	5.62E-03	4.44E-03
Rh105	0.00E+00	0.00E+00	3.49E-03	1.13E-02	4.66E-03	1.66E-03	9.29E-05	6.21E-09
Y90	0.00E+00	0.00E+00	2.46E-04	3.17E-03	3.76E-03	5.54E-03	7.52E-03	6.67E-03
Y91	0.00E+00	0.00E+00	4.03E-04	2.07E-03	1.43E-03	1.29E-03	1.13E-03	7.36E-04
Y92	0.00E+00	0.00E+00	6.74E-03	3.02E-03	2.29E-05	1.85E-09	9.89E-22	1.22E-62
Y93	0.00E+00	0.00E+00	2.40E-04	3.41E-04	4.28E-05	1.45E-06	6.82E-11	2.63E-25
Zr95	0.00E+00	0.00E+00	4.67E-04	1.98E-03	1.28E-03	1.15E-03	1.01E-03	6.71E-04
Zr97	0.00E+00	0.00E+00	3.41E-04	7.56E-04	1.85E-04	2.36E-05	6.02E-08	1.38E-16
Nb95	0.00E+00	0.00E+00	4.70E-04	2.01E-03	1.31E-03	1.20E-03	1.12E-03	8.63E-04
La140	0.00E+00	0.00E+00	5.42E-03	6.76E-02	7.33E-02	9.08E-02	7.92E-02	2.26E-02
La141	0.00E+00	0.00E+00	1.13E-04	2.89E-05	2.74E-07	5.29E-11	4.64E-22	6.43E-59
La142	0.00E+00	0.00E+00	1.21E-05	3.93E-08	5.24E-13	2.05E-22	1.36E-50	1.75E-144
Pr143	0.00E+00	0.00E+00	4.23E-04	1.86E-03	1.23E-03	1.08E-03	7.73E-04	2.29E-04
Nd147	0.00E+00	0.00E+00	1.85E-04	7.58E-04	4.65E-04	3.76E-04	2.42E-04	5.63E-05
Am241	0.00E+00	0.00E+00	7.86E-08	3.36E-07	2.19E-07	2.01E-07	1.89E-07	1.56E-07
Cm242	0.00E+00	0.00E+00	1.94E-05	8.26E-05	5.38E-05	4.89E-05	4.49E-05	3.39E-05
Cm244	0.00E+00	0.00E+00	1.29E-06	5.52E-06	3.61E-06	3.30E-06	3.11E-06	2.55E-06
Ce141	0.00E+00	0.00E+00	1.19E-03	4.99E-03	3.19E-03	2.80E-03	2.32E-03	1.25E-03
Ce143	0.00E+00	0.00E+00	9.27E-04	2.83E-03	1.12E-03	3.74E-04	1.71E-05	5.94E-10
Ce144	0.00E+00	0.00E+00	9.87E-04	4.20E-03	2.74E-03	2.50E-03	2.32E-03	1.82E-03
Np239	0.00E+00	0.00E+00	1.40E-02	4.90E-02	2.39E-02	1.21E-02	1.95E-03	4.43E-06
Pu238	0.00E+00	0.00E+00	3.87E-06	1.65E-05	1.08E-05	9.89E-06	9.31E-06	7.65E-06
Pu239	0.00E+00	0.00E+00	3.58E-07	1.53E-06	9.98E-07	9.14E-07	8.61E-07	7.08E-07
Pu240	0.00E+00	0.00E+00	5.04E-07	2.15E-06	1.41E-06	1.29E-06	1.21E-06	9.98E-07
Pu241	0.00E+00	0.00E+00	1.47E-04	6.25E-04	4.09E-04	3.74E-04	3.52E-04	2.89E-04
Sr89	0.00E+00	0.00E+00	2.62E-02	1.11E-01	7.15E-02	6.37E-02	5.53E-02	3.45E-02
Sr90	0.00E+00	0.00E+00	3.38E-03	1.44E-02	9.42E-03	8.63E-03	8.12E-03	6.67E-03
Sr91	0.00E+00	0.00E+00	1.85E-02	2.46E-02	2.79E-03	7.65E-05	1.94E-09	9.29E-25
Sr92	0.00E+00	0.00E+00	4.67E-03	3.36E-04	4.76E-07	2.05E-12	2.00E-28	8.57E-82

Project: Nine Mile Point Nuclear Station Unit: __1_ Disposition: ____

Originator/Date	Reviewer/Date	Calculation No.	Revision
		H21C092	00

Ref.

Table F1.3: STARDOSE Output in Ci

Column	1	2	3	4	5	6	7	8	9
Energy Level				E1	E2	E3	E4	E5	E6
Calc	∫Ci	conversion	conversion	conversion	conversion	conversion	conversion	conversion	conversion
Units	Ci-hr	Ci-sec	disintegrations	MeV	MeV	MeV	MeV	MeV	MeV
Kr83m	7.57E+02	2.73E+06	1.01E+17	2.59E+14	0.00E+00	0.00E+00	0.00E+00	0.00E+00	0.00E+00
Kr85m	3.66E+04	1.32E+08	4.87E+18	5.60E+17	2.08E+17	5.84E+14	0.00E+00	0.00E+00	0.00E+00
Kr85	6.69E+05	2.41E+09	8.91E+19	0.00E+00	0.00E+00	1.99E+17	0.00E+00	0.00E+00	0.00E+00
Kr87	7.34E+02	2.64E+06	9.78E+16	1.96E+12	1.95E+16	8.15E+15	2.70E+15	5.67E+15	4.16E+16
Kr88	2.00E+04	7.22E+07	2.67E+18	1.57E+17	4.12E+16	7.09E+17	3.42E+17	1.66E+18	4.01E+18
Kr89	2.56E-41	9.22E-38	3.41E-27	1.71E-28	3.02E-28	1.29E-27	9.70E-28	1.14E-27	2.39E-27
Xe131m	2.25E+05	8.08E+08	2.99E+19	6.01E+17	0.00E+00	0.00E+00	0.00E+00	0.00E+00	0.00E+00
Xe133m	3.93E+05	1.41E+09	5.23E+19	2.17E+18	0.00E+00	0.00E+00	0.00E+00	0.00E+00	0.00E+00
Xe133	2.82E+07	1.01E+11	3.75E+21	1.70E+20	0.00E+00	0.00E+00	0.00E+00	0.00E+00	0.00E+00
Xe135m	1.55E-05	5.56E-02	2.06E+09	8.60E+06	0.00E+00	8.78E+08	0.00E+00	0.00E+00	0.00E+00
Xe135	2.61E+06	9.40E+09	3.48E+20	7.88E+19	7.83E+17	6.62E+18	0.00E+00	0.00E+00	0.00E+00
Xe137	1.43E-32	5.15E-29	1.90E-18	8.57E-22	2.67E-19	1.38E-20	4.50E-20	2.07E-20	9.82E-21
Xe138	5.75E-04	2.07E+00	7.66E+10	7.79E+09	9.52E+09	2.44E+09	4.72E+09	2.64E+10	3.54E+10
I131Org	6.73E+04	2.42E+08	8.96E+18	1.90E+17	2.66E+18	5.60E+17	0.00E+00	0.00E+00	0.00E+00
I132Org	6.69E+01	2.41E+05	8.90E+15	6.32E+13	1.22E+14	1.68E+16	2.79E+15	2.49E+14	3.35E+14
I133Org	2.23E+04	8.04E+07	2.97E+18	4.19E+15	8.06E+15	1.62E+18	1.72E+17	0.00E+00	0.00E+00
I134Org	1.54E+00	5.53E+03	2.04E+14	2.86E+12	1.40E+13	3.81E+14	8.00E+13	5.56E+13	3.54E+12
I135Org	2.78E+03	1.00E+07	3.70E+17	5.45E+15	8.39E+15	4.80E+16	3.45E+17	1.55E+17	2.02E+16
I131Elem	1.95E+06	7.01E+09	2.59E+20	5.51E+18	7.71E+19	1.62E+19	0.00E+00	0.00E+00	0.00E+00
I132Elem	1.87E+03	6.73E+06	2.49E+17	1.77E+15	3.41E+15	4.71E+17	7.81E+16	6.96E+15	9.36E+15
I133Elem	6.37E+05	2.29E+09	8.49E+19	1.20E+17	2.30E+17	4.62E+19	4.92E+18	0.00E+00	0.00E+00
I134Elem	4.29E+01	1.54E+05	5.71E+15	7.99E+13	3.91E+14	1.06E+16	2.24E+15	1.55E+15	9.88E+13
I135Elem	7.80E+04	2.81E+08	1.04E+19	1.53E+17	2.36E+17	1.35E+18	9.70E+18	4.37E+18	5.67E+17
I131Part	1.28E+00	4.62E+03	1.71E+14	3.63E+12	5.09E+13	1.07E+13	0.00E+00	0.00E+00	0.00E+00
I132Part	5.48E-02	1.97E+02	7.30E+12	5.18E+10	1.00E+11	1.38E+13	2.29E+12	2.04E+11	2.74E+11
I133Part	1.48E+00	5.34E+03	1.98E+14	2.79E+11	5.35E+11	1.08E+14	1.15E+13	0.00E+00	0.00E+00
I134Part	1.61E-03	5.80E+00	2.15E+11	3.00E+09	1.47E+10	4.00E+11	8.40E+10	5.84E+10	3.71E+09
I135Part	4.78E-01	1.72E+03	6.37E+13	9.39E+11	1.44E+12	8.27E+12	5.95E+13	2.68E+13	3.48E+12
Rb86	3.02E-03	1.09E+01	4.02E+11	0.00E+00	0.00E+00	0.00E+00	3.80E+10	0.00E+00	0.00E+00
Cs134	3.12E-01	1.12E+03	4.15E+13	1.45E+10	2.88E+11	6.13E+13	3.03E+12	0.00E+00	0.00E+00
Cs136	9.32E-02	3.35E+02	1.24E+13	1.24E+12	2.07E+12	1.02E+13	1.34E+13	0.00E+00	0.00E+00
Cs137	1.87E-01	6.72E+02	2.49E+13	5.74E+10	0.00E+00	1.40E+13	0.00E+00	0.00E+00	0.00E+00
Sb127	2.74E-02	9.86E+01	3.65E+12	1.13E+11	5.77E+11	1.69E+12	3.11E+10	0.00E+00	0.00E+00
Sb129	9.17E-03	3.30E+01	1.22E+12	1.34E+10	3.29E+10	1.16E+12	3.00E+11	2.15E+11	2.45E+10
Te127m	4.29E-03	1.54E+01	5.71E+11	6.37E+09	0.00E+00	4.00E+07	0.00E+00	0.00E+00	0.00E+00
Te127	2.81E-02	1.01E+02	3.74E+12	8.22E+08	1.72E+10	0.00E+00	0.00E+00	0.00E+00	0.00E+00
Te129m	1.36E-02	4.89E+01	1.81E+12	1.46E+10	0.00E+00	5.67E+10	0.00E+00	0.00E+00	0.00E+00
Te129	1.20E-02	4.32E+01	1.60E+12	1.26E+10	6.23E+10	6.23E+09	1.10E+10	0.00E+00	0.00E+00
Te131m	2.67E-02	9.62E+01	3.56E+12	2.69E+11	2.27E+11	3.06E+12	1.16E+12	1.64E+11	2.01E+11
Te132	3.41E-01	1.23E+03	4.54E+13	1.05E+13	0.00E+00	0.00E+00	0.00E+00	0.00E+00	0.00E+00
Ba137m	1.87E-01	6.72E+02	2.49E+13	0.00E+00	0.00E+00	0.00E+00	0.00E+00	0.00E+00	0.00E+00
Ba139	1.11E-03	3.99E+00	1.48E+11	4.42E+09	0.00E+00	0.00E+00	7.86E+08	0.00E+00	0.00E+00

Project: Nine Mile Point Nuclear Station Unit: __1_ Disposition: ___

Originator/Date	Reviewer/Date	Calculation No.	Revision
		H21C092	00

Ref.

Ba140	1.92E-01	6.92E+02	2.56E+13	4.35E+11	9.45E+11	3.51E+12	0.00E+00	0.00E+00	0.00E+00

Table F1.3: STARDOSE Output in Ci (cont.)

Column	1	2	3	4	5	6	7	8	9
Energy Level	-	-	-	E1	E2	E3	E4	E5	E6
Calc	∫Ci	conversion	conversion	conversion	conversion	conversion	conversion	conversion	conversion
Units	Ci-hr	Ci-sec	disintegrations	MeV	MeV	MeV	MeV	MeV	MeV
Mo99	2.22E-02	8.00E+01	2.96E+12	5.20E+10	1.49E+10	3.92E+11	0.00E+00	0.00E+00	0.00E+00
Tc99m	2.23E-02	8.04E+01	2.98E+12	3.77E+11	0.00E+00	0.00E+00	0.00E+00	0.00E+00	0.00E+00
Ru103	2.27E-02	8.18E+01	3.03E+12	3.39E+09	1.34E+12	1.17E+11	0.00E+00	0.00E+00	0.00E+00
Ru105	1.64E-03	5.89E+00	2.18E+11	1.26E+10	3.90E+10	1.26E+11	1.42E+09	0.00E+00	0.00E+00
Ru106	9.46E-03	3.41E+01	1.26E+12	0.00E+00	0.00E+00	2.20E+11	3.85E+10	3.09E+09	0.00E+00
Rh105	1.13E-02	4.06E+01	1.50E+12	1.10E+09	1.16E+11	0.00E+00	0.00E+00	0.00E+00	0.00E+00
Y90	2.58E-03	9.28E+00	3.44E+11	0.00E+00	0.00E+00	0.00E+00	0.00E+00	0.00E+00	0.00E+00
Y91	1.84E-03	6.62E+00	2.45E+11	0.00E+00	0.00E+00	0.00E+00	8.85E+08	0.00E+00	0.00E+00
Y92	9.91E-03	3.57E+01	1.32E+12	0.00E+00	1.70E+10	2.11E+11	9.23E+10	1.21E+10	0.00E+00
Y93	4.92E-04	1.77E+00	6.56E+10	1.20E+09	0.00E+00	1.48E+09	9.24E+08	1.77E+09	4.68E+08
Zr95	1.85E-03	6.66E+00	2.46E+11	0.00E+00	0.00E+00	1.81E+11	0.00E+00	0.00E+00	0.00E+00
Zr97	8.72E-04	3.14E+00	1.16E+11	5.32E+08	1.22E+09	7.05E+09	8.68E+09	3.50E+09	0.00E+00
Nb95	1.87E-03	6.75E+00	2.50E+11	4.99E+06	2.75E+07	1.91E+11	0.00E+00	0.00E+00	0.00E+00
La140	5.36E-02	1.93E+02	7.13E+12	2.92E+10	2.15E+12	2.65E+12	3.59E+10	1.09E+13	7.83E+11
La141	1.54E-04	5.54E-01	2.05E+10	0.00E+00	0.00E+00	0.00E+00	7.28E+08	1.48E+08	0.00E+00
La142	1.47E-05	5.29E-02	1.96E+09	8.41E+05	7.27E+06	8.92E+08	4.36E+08	7.52E+08	3.23E+09
Pr143	1.72E-03	6.18E+00	2.29E+11	0.00E+00	0.00E+00	0.00E+00	0.00E+00	0.00E+00	0.00E+00
Nd147	7.13E-04	2.57E+00	9.49E+10	4.47E+09	1.55E+09	7.34E+09	0.00E+00	0.00E+00	0.00E+00
Am241	3.14E-07	1.13E-03	4.18E+07	1.17E+06	0.00E+00	0.00E+00	0.00E+00	0.00E+00	0.00E+00
Cm242	7.72E-05	2.78E-01	1.03E+10	1.72E+07	0.00E+00	0.00E+00	0.00E+00	0.00E+00	0.00E+00
Cm244	5.16E-06	1.86E-02	6.87E+08	1.02E+06	0.00E+00	0.00E+00	0.00E+00	0.00E+00	0.00E+00
Ce141	4.67E-03	1.68E+01	6.22E+11	4.78E+10	0.00E+00	0.00E+00	0.00E+00	0.00E+00	0.00E+00
Ce143	2.88E-03	1.04E+01	3.84E+11	6.10E+10	9.03E+09	3.34E+10	1.55E+09	0.00E+00	0.00E+00
Ce144	3.93E-03	1.41E+01	5.24E+11	1.01E+10	0.00E+00	0.00E+00	0.00E+00	0.00E+00	0.00E+00
Np239	4.79E-02	1.72E+02	6.38E+12	1.02E+12	7.54E+10	0.00E+00	0.00E+00	0.00E+00	0.00E+00
Pu238	1.54E-05	5.56E-02	2.06E+09	3.29E+06	0.00E+00	0.00E+00	0.00E+00	0.00E+00	0.00E+00
Pu239	1.43E-06	5.13E-03	1.90E+08	1.23E+05	0.00E+00	0.00E+00	0.00E+00	0.00E+00	0.00E+00
Pu240	2.01E-06	7.24E-03	2.68E+08	4.10E+05	0.00E+00	0.00E+00	0.00E+00	0.00E+00	0.00E+00
Pu241	5.84E-04	2.10E+00	7.78E+10	0.00E+00	0.00E+00	0.00E+00	0.00E+00	0.00E+00	0.00E+00
Sr89	1.04E-01	3.73E+02	1.38E+13	0.00E+00	0.00E+00	1.93E+09	0.00E+00	0.00E+00	0.00E+00
Sr90	1.35E-02	4.85E+01	1.80E+12	0.00E+00	0.00E+00	0.00E+00	0.00E+00	0.00E+00	0.00E+00
Sr91	3.70E-02	1.33E+02	4.93E+12	2.26E+10	2.66E+09	1.53E+12	1.80E+12	3.63E+10	0.00E+00
Sr92	5.83E-03	2.10E+01	7.76E+11	5.57E+09	1.21E+10	2.94E+10	9.92E+11	0.00E+00	0.00E+00
TOTAL (MeV) in RB*				2.58E+20	8.13E+19	7.41E+19	1.56E+19	6.19E+18	4.65E+18

*Dividing these values be the total volume of the RB, (3E+10 cc) gives the results presented in the summary table.

Ref.

Appendix G Reactor Building Shine to the Control Room Using QADMOD (17 pages)

Background

In Attachment 1 to Reference G1, an existing QADMOD (Reference G2) model exists for reactor building shine dose to the control room following a LOCA. The model is reproduced in the Design Input Summary of the main body of the calculation and is repeated here:

```
Unit 1 LOCA  Control Room  Reactor Building Shine
    8    2    0    2   25   33    2   -2    1   12    6   16
                             0    1
  3.01+10
      0.0   300.23   600.45   900.68  1200.90  1501.13  1801.35  2101.58
  2401.80  2702.03  3002.25  3302.48  3602.70
 10363.20 10644.12 10925.05 11205.97 11486.89 11767.82 12048.74
      0.0   309.56   619.13   928.69  1238.25  1547.81  1857.38  2166.94
  2476.50  2786.06  3095.63  3405.19  3714.75  4024.31  4333.88  4643.44
  4953.00
  1     1  3602.70
  2     1  5443.20
  3     1  5534.60
  4     1  6052.80
  5     1  6144.30
  6     1  7448.60
  7     1  7463.80
  8     1  7555.20
  9     1  8723.60
 10     1 10110.50
 11     1 10739.10
 12     1 10769.60
 13     1 12324.10
 14     2  3695.70
 15     2  4953.00
 16     2  6088.40
 17     2  6179.80
 18     2  6225.50
 19     2  6286.50
 20     2  6736.10
 21     2  6766.60
 22     3 10363.20
 23     3 10110.50
```

Project: Nine Mile Point Nuclear Station Unit: __1__ Disposition: ____

Originator/Date	Reviewer/Date	Calculation No.	Revision
J. Metcalf 12/12/06	D. Leaver 12/12/06	H21C092	00

Ref.

```
 24     3  9144.00
 25     3  9123.70
  1     1  1 15 22                                  10.      10.      10.
  2     2  1 15 22                                  10.      10.   11000.
  3     2  1 15                                     10.    6000.      10.
  4     2  1  2                                   4000.    6000.      10.
  5     2  2 11 20                                8000.    8000.      10.
  6     2  2  9 17 20                             8000.    6400.      10.
  7     2  2  4 14 17 23                          5500.    5000.      10.
  8     1  2  3 14 23                             5500.    3000.      10.
  9     2  3  6 14 24                             6000.    2000.      10.
 10     2  3  7 14 23 24                          6000.    2000.   10000.
 11     1  4  5 14 17 23                          6100.    5000.      10.
 12     2  5  6 14 16 24                          6600.    5000.      10.
 13     2  5  7 14 16 23 24                       6600.    5000.   10000.
 14     1  6  8 16 24                             7500.    2000.      10.
 15     1  7  8 16 23 24                          7500.    2000.   10000.
 16     2  2  8 17 23                             6000.    2000.   12000.
 17     2  8  9 16                                8000.    2000.      10.
 18     1  5  9 16 17 23                          8000.    6100.      10.
 19     2  8  9 16 17 23                          8000.    6100.   12000.
 20     2  9 10 18                                9000.    2000.      10.
 21     1  9 10 18 19 24                          9000.    6250.      10.
 22     2  9 10 18 19 24                          9000.    6250.   12000.
 23     2  9 10 19 20                             9000.    6400.      10.
 24     2 10 16                                  12000.    2000.      10.
 25     1 10 13 16 17 24                         10500.    6100.      10.
 26     2 10 13 16 17 24                         10500.    6100.   12000.
 27     2 10 17 20                               12000.    6400.      10.
 28     2 13 16 17                               13000.    6100.      10.
 29     1 11 12 20 24                            10750.    8000.      10.
 30     1 12 20 21 24                            12000.    6750.      10.
 31     2 12 21 25                               12000.    8000.      10.
 32     1 12 21 24 25                            12000.    8000.    9130.
 33     2 11 20 24                               12000.    8000.   12000.
    2.05
          1.225-3
  25    23
 2.82+10  1.11+10   2.15+9   1.59+9   5.85+8   5.31+8   3.63+5      0.0
 6.84-10  5.83-10  5.10-10  4.69-10  4.32-10  4.13-10  3.67-10  3.01-10
 MEV PER                    REM      CM**2
```

Ref.

```
10799.59   6796.60   8625.84    1                                DP #1
10799.59   8509.48   8625.84    1                                DP #2
12934.79   8509.48   8625.84    1                                DP #3
10799.59   6750.84   9145.00    1                                DP #4
10799.59   8509.48   9145.00    1                                DP #5
12934.79   8509.48   9145.00    1                                DP #6
                               -1
```

(Note that shielding material indices were reversed in original model – see box above – correction shown)

To execute this model for AST, it is only necessary to change the following integrated energies (MeV/cc) by energy group:

```
2.82+10  1.11+10   2.15+9   1.59+9   5.85+8   5.31+8   3.63+5      0.0
```

The corresponding group representative energies from the QADMOD documentation are as follows:

```
0.4 MeV  0.8 MeV  1.3 MeV  1.7 MeV  2.2 MeV  2.5 MeV  3.5 MeV 6.15 MeV
```

To use these standard energy groups, the following information from Appendix F:

RB activity concentrations

	Energy (MeV)		Integrated Activity	
	Interval	mdpt	(MeV-sec/ cc-sec)	Occupancy Factor
E1	0-.3	0.2	1.30E+10	**8.60E+09**
E2	.3-.5	0.4	4.84E+09	**2.71E+09**
E3	.5-1	0.75	3.36E+09	**2.47E+09**
E4	1-1.5	1.25	5.78E+08	**5.19E+08**
E5	1.5-2	1.75	2.13E+08	**2.06E+08**
E6	2+	2.5	1.56E+08	**1.55E+08**

is adapted by (1) adding E1 and E2 and placing that energy in the 0.4 MeV group, (2) placing the E3 energy in the 0.8 MeV group, (3) placing the E4 energy in the 1.3 MeV group, (4) placing the E5 energy in the 1.7 MeV group, and (5) skipping the 2.2 MeV group and placing the E6 energy in the 2.5 MeV group. The 3.5 MeV and 6.15 MeV groups are ignored. Therefore, the inputs are as follows:

```
0.4 MeV  0.8 MeV  1.3 MeV  1.7 MeV  2.2 MeV  2.5 MeV  3.5 MeV 6.15 MeV
1.13+10   2.47+9   5.18+8   2.06+8      0.0   1.55+8      0.0      0.0
```

Ref.

QADMOD Run

The QADMOD run is reproduced as follows:

```
 Unit 1 LOCA  Control Room  Reactor Building Shine
   8    2    0    2   25   33    2   -2    1   12    6   16
                             0    1
 3.01+10
     0.0   300.23   600.45   900.68  1200.90  1501.13  1801.35  2101.58
 2401.80  2702.03  3002.25  3302.48  3602.70
10363.20 10644.12 10925.05 11205.97 11486.89 11767.82 12048.74
     0.0   309.56   619.13   928.69  1238.25  1547.81  1857.38  2166.94
 2476.50  2786.06  3095.63  3405.19  3714.75  4024.31  4333.88  4643.44
 4953.00
 1     1  3602.70
 2     1  5443.20
 3     1  5534.60
 4     1  6052.80
 5     1  6144.30
 6     1  7448.60
 7     1  7463.80
 8     1  7555.20
 9     1  8723.60
10     1 10110.50
11     1 10739.10
12     1 10769.60
13     1 12324.10
14     2  3695.70
15     2  4953.00
16     2  6088.40
17     2  6179.80
18     2  6225.50
19     2  6286.50
20     2  6736.10
21     2  6766.60
22     3 10363.20
23     3 10110.50
24     3  9144.00
25     3  9123.70
 1     1  1 15 22                                  10.      10.      10.
 2     2  1 15 22                                  10.      10.   11000.
 3     2  1 15                                     10.    6000.      10.
 4     2  1  2                                   4000.    6000.      10.
 5     2  2 11 20                                8000.    8000.      10.
```

Project: Nine Mile Point Nuclear Station Unit: __1__ Disposition: ____

Originator/Date	Reviewer/Date	Calculation No.	Revision
J. Metcalf 12/12/06	D. Leaver 12/12/06	H21C092	00

Ref.

```
  6     2  2  9 17 20                          8000.    6400.      10.
  7     2  2  4 14 17 23                       5500.    5000.      10.
  8     1  2  3 14 23                          5500.    3000.      10.
  9     2  3  6 14 24                          6000.    2000.      10.
 10     2  3  7 14 23 24                       6000.    2000.   10000.
 11     1  4  5 14 17 23                       6100.    5000.      10.
 12     2  5  6 14 16 24                       6600.    5000.      10.
 13     2  5  7 14 16 23 24                    6600.    5000.   10000.
 14     1  6  8 16 24                          7500.    2000.      10.
 15     1  7  8 16 23 24                       7500.    2000.   10000.
 16     2  2  8 17 23                          6000.    2000.   12000.
 17     2  8  9 16                             8000.    2000.      10.
 18     1  5  9 16 17 23                       8000.    6100.      10.
 19     2  8  9 16 17 23                       8000.    6100.   12000.
 20     2  9 10 18                             9000.    2000.      10.
 21     1  9 10 18 19 24                       9000.    6250.      10.
 22     2  9 10 18 19 24                       9000.    6250.   12000.
 23     2  9 10 19 20                          9000.    6400.      10.
 24     2 10 16                               12000.    2000.      10.
 25     1 10 13 16 17 24                      10500.    6100.      10.
 26     2 10 13 16 17 24                      10500.    6100.   12000.
 27     2 10 17 20                            12000.    6400.      10.
 28     2 13 16 17                            13000.    6100.      10.
 29     1 11 12 20 24                         10750.    8000.      10.
 30     1 12 20 21 24                         12000.    6750.      10.
 31     2 12 21 25                            12000.    8000.      10.
 32     1 12 21 24 25                         12000.    8000.    9130.
 33     2 11 20 24                            12000.    8000.   12000.
     2.05
            1.225-3
   25   23
  1.13+10   2.47+9   5.19+8   2.06+8   0.00+0   1.55+8   0.00+0      0.0
  6.84-10  5.83-10  5.10-10  4.69-10  4.32-10  4.13-10  3.67-10  3.01-10
  MEV PER                    REM       CM**2
 10799.59  6796.60  8625.84    1                                DP #1
 10799.59  8509.48  8625.84    1                                DP #2
 12934.79  8509.48  8625.84    1                                DP #3
 10799.59  6750.84  9145.00    1                                DP #4
 10799.59  8509.48  9145.00    1                                DP #5
 12934.79  8509.48  9145.00    1                                DP #6
                              -1
----+----1----+----2----+----3----+----4----+----5----+----6----+----7----+----8
```

Ref.

```
                    TU ELECTRIC

                COMANCHE PEAK ENGINEERING

                    QADMOD-GP PROGRAM

        QADMOD-G CCC-396 (PC VERSION WITH OPTIONAL G-P BU FACTORS)

         Unit 1 LOCA  Control Room  Reactor Building Shine

        ***** PROGRAM CONTROL *****

        NUMBER OF PHOTON ENERGY GROUPS,MAX. 30          =   8
        NUMBER OF MATERIALS,MAX. 30                     =   2
        NO. OF MATERIALS TO BE READ FROM CARDS          =   0
        NUMBER OF COMPOSITIONS,MAX. 100                 =   2
        NUMBER OF BOUNDARIES,MAX. 250                   =  25
        NUMBER OF ZONES,MAX. 300                        =  33
        MOST PROBABLE SOURCE ZONE                       =   2
        SOURCE COMPUTATION OPTION                       =  -2
        SOURCE GEOMETRY TYPE OPTION                     =   1
        NUMBER OF SOURCE POINTS ALONG THE X AXIS,MAX. 30 =  12
        NUMBER OF SOURCE POINTS ALONG THE Z AXIS,MAX. 30 =   6
        NUMBER OF SOURCE POINTS ALONG THE Y AXIS,MAX. 30 =  16
        SUMMARY TABLE PUNCH OPTION, NO=0,YES=1          =   0
        DEBUG FLAG FOR PRINTOUT, USUAL PRINT=0, DEBUG=1 =   0
        FIRST SOURCE-DETECTOR TRAVERSE FOR GEOMETRY PRINT=  0
        LAST SOURCE-DETECTOR TRAVERSE FOR GEOMETRY PRINT =  0
        DEL SOURCE-DETECTOR TRAVERSE FOR GEOMETRY PRINT  =  0
        GAMMA RAY REFERENCE MATERIALS                   =   0
        CONVERSION OF GAMMA RAY OUTPUT OPTION           =   0
        GAMMA FTOD FACTORS,CARD INPUT=0,INTERNAL=NO.    =   0
        BUILDUP FACTORS, CARD INPUT=0, INT=1,4, G-P=5   =   1
        GAMMA HEAT CONVERSION FACTORS(NO=0,YES=1)       =   0
```

Ref.

```
     SOURCE  3.0100E+10  0.0000E+00  0.0000E+00  0.0000E+00  0.0000E+00  0.0000E+00
0.0000E+00

          R  0.0000E+00  3.0023E+02  6.0045E+02  9.0068E+02  1.2009E+03  1.5011E+03
1.8013E+03  2.1016E+03
             2.4018E+03  2.7020E+03  3.0023E+03  3.3025E+03  3.6027E+03

          Z  1.0363E+04  1.0644E+04  1.0925E+04  1.1206E+04  1.1487E+04  1.1768E+04
1.2049E+04

        PHI  0.0000E+00  3.0956E+02  6.1913E+02  9.2869E+02  1.2383E+03  1.5478E+03
1.8574E+03  2.1669E+03
             2.4765E+03  2.7861E+03  3.0956E+03  3.4052E+03  3.7148E+03  4.0243E+03
4.3339E+03  4.6434E+03
             4.9530E+03

       F(L)  1.0000E+00  1.0000E+00  1.0000E+00  1.0000E+00  1.0000E+00  1.0000E+00
1.0000E+00  1.0000E+00
             1.0000E+00  1.0000E+00  1.0000E+00  1.0000E+00  1.0000E+00

       F(M)  1.0000E+00  1.0000E+00  1.0000E+00  1.0000E+00  1.0000E+00  1.0000E+00
1.0000E+00

       F(N)  1.0000E+00  1.0000E+00  1.0000E+00  1.0000E+00  1.0000E+00  1.0000E+00
1.0000E+00  1.0000E+00
             1.0000E+00  1.0000E+00  1.0000E+00  1.0000E+00  1.0000E+00  1.0000E+00
1.0000E+00  1.0000E+00
             1.0000E+00
```

Ref.

```
****GEOMETRY DESCRIPTION***

    BOUNDARY DESCRIPTION

  BOUNDARY                                                ADM(CM)
  NO IND TYPE
   1   0   1  3.6027E+03  0.0000E+00  0.0000E+00  0.0000E+00  0.0000E+00  0.0000E+00
0.0000E+00
   2   0   1  5.4432E+03  0.0000E+00  0.0000E+00  0.0000E+00  0.0000E+00  0.0000E+00
0.0000E+00
   3   0   1  5.5346E+03  0.0000E+00  0.0000E+00  0.0000E+00  0.0000E+00  0.0000E+00
0.0000E+00
   4   0   1  6.0528E+03  0.0000E+00  0.0000E+00  0.0000E+00  0.0000E+00  0.0000E+00
0.0000E+00
   5   0   1  6.1443E+03  0.0000E+00  0.0000E+00  0.0000E+00  0.0000E+00  0.0000E+00
0.0000E+00
   6   0   1  7.4486E+03  0.0000E+00  0.0000E+00  0.0000E+00  0.0000E+00  0.0000E+00
0.0000E+00
   7   0   1  7.4638E+03  0.0000E+00  0.0000E+00  0.0000E+00  0.0000E+00  0.0000E+00
0.0000E+00
   8   0   1  7.5552E+03  0.0000E+00  0.0000E+00  0.0000E+00  0.0000E+00  0.0000E+00
0.0000E+00
   9   0   1  8.7236E+03  0.0000E+00  0.0000E+00  0.0000E+00  0.0000E+00  0.0000E+00
0.0000E+00
  10   0   1  1.0111E+04  0.0000E+00  0.0000E+00  0.0000E+00  0.0000E+00  0.0000E+00
0.0000E+00
  11   0   1  1.0739E+04  0.0000E+00  0.0000E+00  0.0000E+00  0.0000E+00  0.0000E+00
0.0000E+00
  12   0   1  1.0770E+04  0.0000E+00  0.0000E+00  0.0000E+00  0.0000E+00  0.0000E+00
0.0000E+00
  13   0   1  1.2324E+04  0.0000E+00  0.0000E+00  0.0000E+00  0.0000E+00  0.0000E+00
0.0000E+00
  14   0   2  3.6957E+03  0.0000E+00  0.0000E+00  0.0000E+00  0.0000E+00  0.0000E+00
0.0000E+00
  15   0   2  4.9530E+03  0.0000E+00  0.0000E+00  0.0000E+00  0.0000E+00  0.0000E+00
0.0000E+00
  16   0   2  6.0884E+03  0.0000E+00  0.0000E+00  0.0000E+00  0.0000E+00  0.0000E+00
0.0000E+00
  17   0   2  6.1798E+03  0.0000E+00  0.0000E+00  0.0000E+00  0.0000E+00  0.0000E+00
0.0000E+00
  18   0   2  6.2255E+03  0.0000E+00  0.0000E+00  0.0000E+00  0.0000E+00  0.0000E+00
0.0000E+00
  19   0   2  6.2865E+03  0.0000E+00  0.0000E+00  0.0000E+00  0.0000E+00  0.0000E+00
0.0000E+00
  20   0   2  6.7361E+03  0.0000E+00  0.0000E+00  0.0000E+00  0.0000E+00  0.0000E+00
0.0000E+00
  21   0   2  6.7666E+03  0.0000E+00  0.0000E+00  0.0000E+00  0.0000E+00  0.0000E+00
0.0000E+00
```

Ref.

```
  22    0    3  1.0363E+04  0.0000E+00  0.0000E+00  0.0000E+00  0.0000E+00  0.0000E+00
0.0000E+00
  23    0    3  1.0111E+04  0.0000E+00  0.0000E+00  0.0000E+00  0.0000E+00  0.0000E+00
0.0000E+00
  24    0    3  9.1440E+03  0.0000E+00  0.0000E+00  0.0000E+00  0.0000E+00  0.0000E+00
0.0000E+00
  25    0    3  9.1237E+03  0.0000E+00  0.0000E+00  0.0000E+00  0.0000E+00  0.0000E+00
0.0000E+00

     REGION DESCRIPTION
```

REG NO	MAT NO	BOUNDS BY REGION									POINT IN REGION X(CM)	Y(CM)	Z(CM)
1	1	1	15	22	0	0	0	0	0	0	1.0000E+01	1.0000E+01	1.0000E+01
2	2	1	15	22	0	0	0	0	0	0	1.0000E+01	1.0000E+01	1.1000E+04
3	2	1	15	0	0	0	0	0	0	0	1.0000E+01	6.0000E+03	1.0000E+01
4	2	1	2	0	0	0	0	0	0	0	4.0000E+03	6.0000E+03	1.0000E+01
5	2	2	11	20	0	0	0	0	0	0	8.0000E+03	8.0000E+03	1.0000E+01
6	2	2	9	17	20	0	0	0	0	0	8.0000E+03	6.4000E+03	1.0000E+01
7	2	2	4	14	17	23	0	0	0	0	5.5000E+03	5.0000E+03	1.0000E+01
8	1	2	3	14	23	0	0	0	0	0	5.5000E+03	3.0000E+03	1.0000E+01
9	2	3	6	14	24	0	0	0	0	0	6.0000E+03	2.0000E+03	1.0000E+01
10	2	3	7	14	23	24	0	0	0	0	6.0000E+03	2.0000E+03	1.0000E+04
11	1	4	5	14	17	23	0	0	0	0	6.1000E+03	5.0000E+03	1.0000E+01
12	2	5	6	14	16	24	0	0	0	0	6.6000E+03	5.0000E+03	1.0000E+01
13	2	5	7	14	16	23	24	0	0	0	6.6000E+03	5.0000E+03	1.0000E+04
14	1	6	8	16	24	0	0	0	0	0	7.5000E+03	2.0000E+03	1.0000E+01
15	1	7	8	16	23	24	0	0	0	0	7.5000E+03	2.0000E+03	1.0000E+04
16	2	2	8	17	23	0	0	0	0	0	6.0000E+03	2.0000E+03	1.2000E+04
17	2	8	9	16	0	0	0	0	0	0	8.0000E+03	2.0000E+03	1.0000E+01
18	1	5	9	16	17	23	0	0	0	0	8.0000E+03	6.1000E+03	1.0000E+01
19	2	8	9	16	17	23	0	0	0	0	8.0000E+03	6.1000E+03	1.2000E+04
20	2	9	10	18	0	0	0	0	0	0	9.0000E+03	2.0000E+03	1.0000E+01
21	1	9	10	18	19	24	0	0	0	0	9.0000E+03	6.2500E+03	1.0000E+01
22	2	9	10	18	19	24	0	0	0	0	9.0000E+03	6.2500E+03	1.2000E+04
23	2	9	10	19	20	0	0	0	0	0	9.0000E+03	6.4000E+03	1.0000E+01
24	2	10	16	0	0	0	0	0	0	0	1.2000E+04	2.0000E+03	1.0000E+01
25	1	10	13	16	17	24	0	0	0	0	1.0500E+04	6.1000E+03	1.0000E+01
26	2	10	13	16	17	24	0	0	0	0	1.0500E+04	6.1000E+03	1.2000E+04
27	2	10	17	20	0	0	0	0	0	0	1.2000E+04	6.4000E+03	1.0000E+01
28	2	13	16	17	0	0	0	0	0	0	1.3000E+04	6.1000E+03	1.0000E+01
29	1	11	12	20	24	0	0	0	0	0	1.0750E+04	8.0000E+03	1.0000E+01
30	1	12	20	21	24	0	0	0	0	0	1.2000E+04	6.7500E+03	1.0000E+01
31	2	12	21	25	0	0	0	0	0	0	1.2000E+04	8.0000E+03	1.0000E+01
32	1	12	21	24	25	0	0	0	0	0	1.2000E+04	8.0000E+03	9.1300E+03
33	2	11	20	24	0	0	0	0	0	0	1.2000E+04	8.0000E+03	1.2000E+04

Ref.

```
****MATERIAL DENSITIES****

COMP/MAT        1            2
     1       2.0500E+00   0.0000E+00
     2       0.0000E+00   1.2250E-03


***MATERIAL REFERENCE NUMBERS***

                25           23


***MATERIAL ATTENUATION COEF.***

  GRP/MAT       1            2

                             GAMMA ATTENUATION COEFFICIENT
     1       9.5750E-02   9.5270E-02
     2       7.0890E-02   7.0680E-02
     3       5.6650E-02   5.6470E-02
     4       4.9080E-02   4.8830E-02
     5       4.3140E-02   4.2730E-02
     6       4.0660E-02   4.0130E-02
     7       3.4210E-02   3.3290E-02
     8       2.6770E-02   2.5000E-02
```

Ref.

GRP	SOURCE SPECTRA	CONVERSION FACTORS	B0	B1	B2	B3
1	1.1300E+10	6.8400E-10	9.9958E-01	1.1054E+00	2.6019E-01	4.1881E-03
2	2.4700E+09	5.8300E-10	9.9568E-01	9.1546E-01	1.5940E-01	-8.5060E-04
3	5.1900E+08	5.1000E-10	9.9334E-01	8.2479E-01	8.2983E-02	-1.2038E-03
4	2.0600E+08	4.6900E-10	9.9420E-01	7.7514E-01	5.2823E-02	-8.2951E-04
5	0.0000E+00	4.3200E-10	9.9616E-01	7.2817E-01	3.1157E-02	-5.0390E-04
6	1.5500E+08	4.1300E-10	9.9722E-01	7.0133E-01	2.4519E-02	-3.7916E-04
7	0.0000E+00	3.6700E-10	1.0012E+00	6.2686E-01	4.5545E-03	-2.4947E-05
8	0.0000E+00	3.0100E-10	1.0053E+00	4.8738E-01	-7.7360E-03	2.4680E-04

MEAN ENERGY FOR GROUP

4.0000E-01 8.0000E-01 1.3000E+00 1.7000E+00 2.2000E+00 2.5000E+00 3.5000E+00
6.1500E+00

NOTATIONS FOR OUTPUT UNITS :
UNIT G-
MEV PER REM

CM**2

Project: Nine Mile Point Nuclear Station Unit: __1__ Disposition: ____

Originator/Date	Reviewer/Date	Calculation No.	Revision
J. Metcalf 12/12/06	D. Leaver 12/12/06	H21C092	00

Ref.

```
                                   COORDINATE TYPE 1          SOURCE INTENSITY OPTION 2

        COORDINATE   INTENSITY  COORDINATE   INTENSITY  COORDINATE   INTENSITY  COORDINATE
INTENSITY



     X COORDINATE
    1  1.5012E+02  6.0046E+02  4.5034E+02  6.0044E+02  7.5057E+02  6.0046E+02  1.0508E+03
6.0044E+02
    5  1.3510E+03  6.0046E+02  1.6512E+03  6.0044E+02  1.9515E+03  6.0046E+02  2.2517E+03
6.0044E+02
    9  2.5519E+03  6.0046E+02  2.8521E+03  6.0044E+02  3.1524E+03  6.0046E+02  3.4526E+03
6.0044E+02

     Y COORDINATE
    1  1.5478E+02  6.1912E+02  4.6435E+02  6.1914E+02  7.7391E+02  6.1912E+02  1.0835E+03
6.1912E+02
    5  1.3930E+03  6.1912E+02  1.7026E+03  6.1914E+02  2.0122E+03  6.1912E+02  2.3217E+03
6.1912E+02
    9  2.6313E+03  6.1912E+02  2.9408E+03  6.1914E+02  3.2504E+03  6.1912E+02  3.5600E+03
6.1912E+02
   13  3.8695E+03  6.1912E+02  4.1791E+03  6.1914E+02  4.4887E+03  6.1912E+02  4.7982E+03
6.1912E+02

     Z COORDINATE
    1  1.0504E+04  7.0284E+01  1.0785E+04  7.0286E+01  1.1066E+04  7.0284E+01  1.1346E+04
7.0284E+01
    5  1.1627E+04  7.0286E+01  1.1908E+04  7.0284E+01
```

Ref.

Unit 1 LOCA Control Room Reactor Building Shine

RECEIVER NUMBER 1 DP #1 COORDINATES - X 1.0800E+04 Y 6.7966E+03 Z 8.6258E+03

GRP NO	MEAN ENERGY MEV	MEAN BUILDUP FACTORS	ENERGY FLUX DIRECT BEAM MEV PER CM**2	ENERGY FLUX WITH BUILDUP MEV PER CM**2	DOSE RATE DIRECT BEAM REM	DOSE RATE WITH BUILDUP REM
1	.4000	2.9994E+02	8.0477E-03	2.4138E+00	5.5046E-12	1.6511E-09
2	.8000	7.7479E+01	1.9649E+00	1.5224E+02	1.1456E-09	8.8757E-08
3	1.3000	3.1290E+01	2.4284E+01	7.5982E+02	1.2385E-08	3.8751E-07
4	1.7000	2.0331E+01	8.5846E+01	1.7454E+03	4.0262E-08	8.1858E-07
5	2.2000	0.0000E+00	0.0000E+00	0.0000E+00	0.0000E+00	0.0000E+00
6	2.5000	1.2189E+01	7.5292E+02	9.1774E+03	3.1096E-07	3.7902E-06
7	3.5000	0.0000E+00	0.0000E+00	0.0000E+00	0.0000E+00	0.0000E+00
8	6.1500	0.0000E+00	0.0000E+00	0.0000E+00	0.0000E+00	0.0000E+00
TOTAL	2.1607		8.6503E+02	1.1837E+04	3.6475E-07	5.0867E-06
WOBU	2.3202					

ENERGY FLUX BUILDUP	DOSE BUILDUP
1.3684E+01	1.3946E+01

Ref.

Unit 1 LOCA Control Room Reactor Building Shine

RECEIVER NUMBER 2 DP #2 COORDINATES - X 1.0800E+04 Y 8.5095E+03 Z 8.6258E+03

GRP NO	MEAN ENERGY MEV	MEAN BUILDUP FACTORS	ENERGY FLUX DIRECT BEAM MEV PER CM**2	ENERGY FLUX WITH BUILDUP MEV PER CM**2	DOSE RATE DIRECT BEAM REM	DOSE RATE WITH BUILDUP REM
1	.4000	2.8895E+01	1.5226E+07	4.3996E+08	1.0415E-02	3.0093E-01
2	.8000	1.1947E+01	2.6828E+07	3.2051E+08	1.5641E-02	1.8686E-01
3	1.3000	6.6873E+00	1.8691E+07	1.2499E+08	9.5323E-03	6.3745E-02
4	1.7000	5.0448E+00	1.4054E+07	7.0898E+07	6.5912E-03	3.3251E-02
5	2.2000	0.0000E+00	0.0000E+00	0.0000E+00	0.0000E+00	0.0000E+00
6	2.5000	3.6722E+00	2.1590E+07	7.9285E+07	8.9169E-03	3.2745E-02
7	3.5000	0.0000E+00	0.0000E+00	0.0000E+00	0.0000E+00	0.0000E+00
8	6.1500	0.0000E+00	0.0000E+00	0.0000E+00	0.0000E+00	0.0000E+00
TOTAL	.6201		9.6389E+07	1.0356E+09	5.1096E-02	6.1753E-01
WOBU	.9369					

ENERGY FLUX BUILDUP	DOSE BUILDUP
1.0744E+01	1.2086E+01

Ref.

Unit 1 LOCA Control Room Reactor Building Shine

RECEIVER NUMBER 3 DP #3 COORDINATES - X 1.2935E+04 Y 8.5095E+03 Z 8.6258E+03

GRP NO	MEAN ENERGY MEV	MEAN BUILDUP FACTORS	ENERGY FLUX DIRECT BEAM MEV PER CM**2	ENERGY FLUX WITH BUILDUP MEV PER CM**2	DOSE RATE DIRECT BEAM REM	DOSE RATE WITH BUILDUP REM
1	.4000	2.8125E+01	2.1229E+06	5.9707E+07	1.4520E-03	4.0839E-02
2	.8000	1.1860E+01	3.6331E+06	4.3090E+07	2.1181E-03	2.5121E-02
3	1.3000	6.8451E+00	2.5343E+06	1.7348E+07	1.2925E-03	8.8475E-03
4	1.7000	5.3126E+00	1.9417E+06	1.0315E+07	9.1064E-04	4.8379E-03
5	2.2000	0.0000E+00	0.0000E+00	0.0000E+00	0.0000E+00	0.0000E+00
6	2.5000	4.0353E+00	3.1510E+06	1.2715E+07	1.3014E-03	5.2514E-03
7	3.5000	0.0000E+00	0.0000E+00	0.0000E+00	0.0000E+00	0.0000E+00
8	6.1500	0.0000E+00	0.0000E+00	0.0000E+00	0.0000E+00	0.0000E+00
TOTAL	.6290		1.3383E+07	1.4318E+08	7.0746E-03	8.4898E-02
WOBU	.9424					

ENERGY FLUX BUILDUP	DOSE BUILDUP
1.0698E+01	1.2000E+01

Ref.

Unit 1 LOCA Control Room Reactor Building Shine

RECEIVER NUMBER 4 DP #4 COORDINATES - X 1.0800E+04 Y 6.7508E+03 Z 9.1450E+03

GRP NO	MEAN ENERGY MEV	MEAN BUILDUP FACTORS	ENERGY FLUX DIRECT BEAM MEV PER CM**2	ENERGY FLUX WITH BUILDUP MEV PER CM**2	DOSE RATE DIRECT BEAM REM	DOSE RATE WITH BUILDUP REM
1	.4000	2.5493E+00	1.3653E+10	3.4805E+10	9.3385E+00	2.3807E+01
2	.8000	1.8574E+00	3.9720E+09	7.3775E+09	2.3157E+00	4.3011E+00
3	1.3000	1.5732E+00	9.8489E+08	1.5494E+09	5.0230E-01	7.9020E-01
4	1.7000	1.4550E+00	4.2742E+08	6.2188E+08	2.0046E-01	2.9166E-01
5	2.2000	0.0000E+00	0.0000E+00	0.0000E+00	0.0000E+00	0.0000E+00
6	2.5000	1.3362E+00	3.5620E+08	4.7596E+08	1.4711E-01	1.9657E-01
7	3.5000	0.0000E+00	0.0000E+00	0.0000E+00	0.0000E+00	0.0000E+00
8	6.1500	0.0000E+00	0.0000E+00	0.0000E+00	0.0000E+00	0.0000E+00
TOTAL	.4575		1.9393E+10	4.4830E+10	1.2504E+01	2.9386E+01
WOBU	.4818					

ENERGY FLUX BUILDUP	DOSE BUILDUP
2.3116E+00	2.3501E+00

Ref.

Unit 1 LOCA Control Room Reactor Building Shine

RECEIVER NUMBER 5 DP #5 COORDINATES - X 1.0800E+04 Y 8.5095E+03 Z 9.1450E+03

GRP NO	MEAN ENERGY MEV	MEAN BUILDUP FACTORS	ENERGY FLUX DIRECT BEAM MEV PER CM**2	ENERGY FLUX WITH BUILDUP MEV PER CM**2	DOSE RATE DIRECT BEAM REM	DOSE RATE WITH BUILDUP REM
1	.4000	2.7165E+00	2.4870E+10	6.7557E+10	1.7011E+01	4.6209E+01
2	.8000	1.9457E+00	7.4182E+09	1.4434E+10	4.3248E+00	8.4149E+00
3	1.3000	1.6294E+00	1.8670E+09	3.0420E+09	9.5217E-01	1.5514E+00
4	1.7000	1.4978E+00	8.1678E+08	1.2234E+09	3.8307E-01	5.7377E-01
5	2.2000	0.0000E+00	0.0000E+00	0.0000E+00	0.0000E+00	0.0000E+00
6	2.5000	1.3641E+00	6.8677E+08	9.3685E+08	2.8364E-01	3.8692E-01
7	3.5000	0.0000E+00	0.0000E+00	0.0000E+00	0.0000E+00	0.0000E+00
8	6.1500	0.0000E+00	0.0000E+00	0.0000E+00	0.0000E+00	0.0000E+00
TOTAL	.4580		3.5658E+10	8.7193E+10	2.2954E+01	5.7136E+01
WOBU	.4842					

ENERGY FLUX BUILDUP	DOSE BUILDUP
2.4452E+00	2.4891E+00

Results

The critical dose point is DP #2 as indicated in Attachment 1 of Reference G1. The dose for this dose point (see boxed output, above) is 0.62 rem.

References

G1 - PSAT 4026CF.QA.03, "Design Data Base for Application of the Alternative DBA Source Term to Nine Mile Point Unit 1" Revision 0

G2 - "QADMOD-GP: Point Kernel Gamma-Ray Shielding Code With Geometric Progression Buildup Factors", RSIC Code Package CCC-565.

Ref.

Appendix H Reactor Building Shine Dose Verification (5 Pages)

Check of Reactor Building Shine Calculated in Appendix G

Background/Methodology

A representative group of radionuclides are chosen such that they produce the same source strength (MeV/cc) as that calculated for the reactor building (RB) in Appendix F. By simplifying the analysis to only include 5 radionuclides, and considering the activity as a point source, the dose can be calculated at a given point in the control room.

Due to the geometry of the RB, and the surrounding structures, only a portion of the RB is 'seen' by the control room. Extending this observation it can be stated that only a portion of the activity in the RB is seen by the control room.

Calculations performed in this Appendix include:

- Determine the percent of the RB 'seen' by the control room
- Determination of the point to be used as the activity point source in the shine calculation
- Distance from the activity point source to the dose location
- Total curies of each representative radionuclide used
- Shine Dose Calculation
- Check of shine dose calculated to the QADMOD result presented in Appendix G

Project: Nine Mile Point Nuclear Station Unit: __1__ Disposition: ____

Originator/Date	Reviewer/Date	Calculation No.	Revision
H. Pustulka 12/12/06	N/A	H21C092	00

Ref.

Calculation

Geometry and Percent 'Seen'

Using the schematics and input from Calculation No. H21C043 Rev 1[Ref H-1] a geometric analysis of the buildings can be carried out.

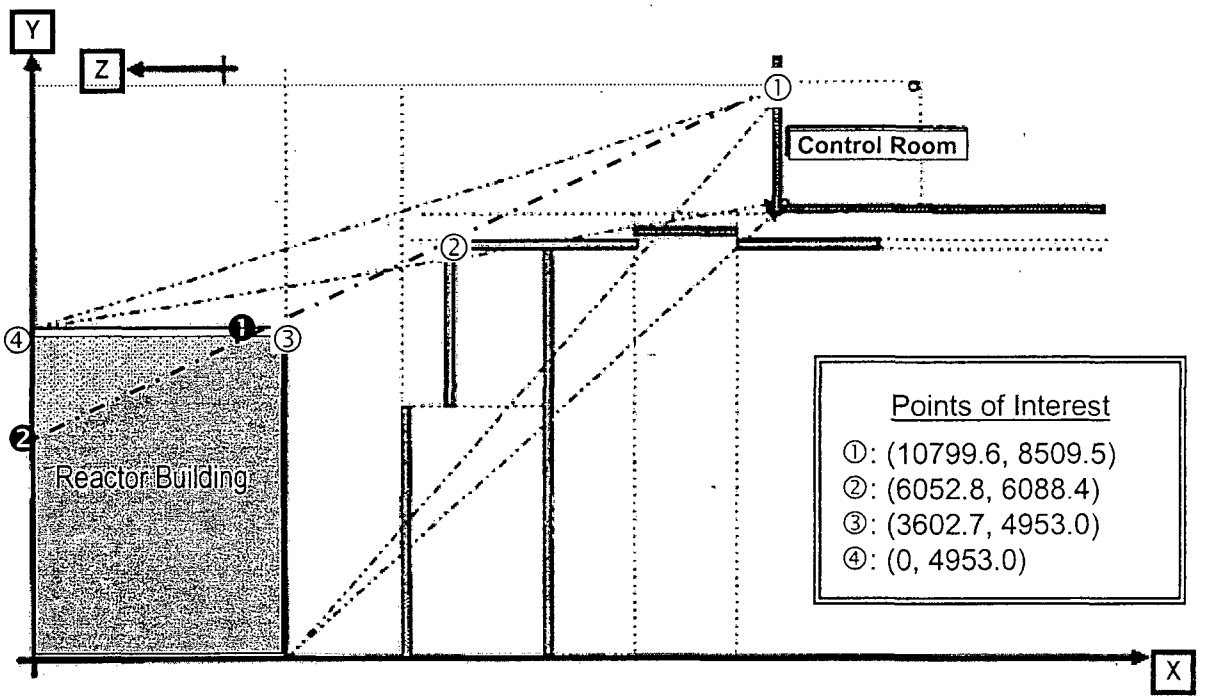

Location ① is the point in the control room that 'sees' the greatest portion of the RB. This point is used in the analysis for conservatism. Point ② is the north/west most side of the north/east wall of the moisture separator/reheater area. The line of sight between location ① and location ② determines the portion of the RB that is seen. The equation of a line is:

$y = mx+b$

The slope (m) of the line is the $\Delta y/\Delta x$ or $(y_1-y_2)/(x_1-x_2) = 0.49$.

Using the values of location ① the point at where the line intercepts the y axis (constant b) is found.

$y = 0.49x+b$

$8509.48 = 0.49(10799.59)+b$

$b = 3209.1$ cm

We now have the equation: $y = 0.49x+3209.1$. This equation is used to determine the point where the line intersects the RB (Location ❶).

$y = 0.49x+3209.1$, where $y = 4953.0$. Solving for x gives: $x = 3553.2$ cm.

Area of the RB: $A_{RB}=b*h$; $A_{RB} =(3602.7*4953.0)$; $\mathbf{A_{RB} = 1.78E+07\ cm^2}$

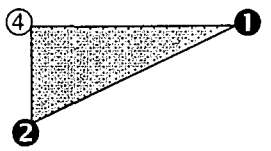

Recognizing that location ❷ has coordinates (0, 3209.1) and using the formula for the area of the triangle:

$A_{Triangle}=½b*h$

$A_{Triangle}A=½(4953.0-3209.1)*(3553.2-0)$

Ref.

$A_{Triangle}$ A= 3.10E+06 cm^2

The percentage of activity in the RB 'seen' by the control room is $A_{Triangle}/A_{RB}$ = 17.4%
A value of 18% is used for conservatism.

Activity as a Point Source

The grey shaded area represents the activity 'seen' by the control room dose point. Dose is calculated at locations ❶,❷ and ④, assuming all the activity is present at the evaluated point. Acknowledging that dose varies as a function of the inverse of distance-squared, and is influenced by the available shielding, these locations provide the high limit dose for the calculation.

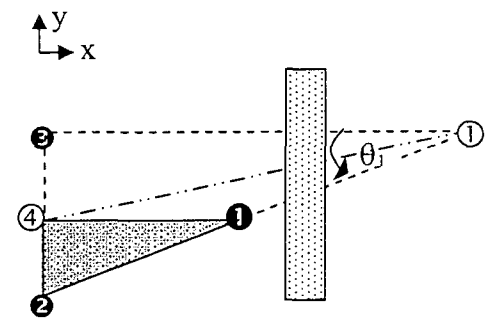

Concrete Shield Thickness and Distance from Dose Point to Activity Point Source

The distance 'D' between two points is calculated using the equation:

$$D(cm) = \sqrt{(y_2 - y_1)^2 + (x_2 - x_1)^2 + (z_2 - z_1)^2}$$

Using the coordinates for locations ❶,❷ and ④, and recognizing that the vertical distance between location ① and locations ❶,❷ and ④ is 2580 cm, or the average elevation of the source (11206 cm) minus ① elevation of 8626 cm.

D(❶) = 8474.4 cm , D(❷) = 112303.7 cm and D(④) = 11659.2 cm.

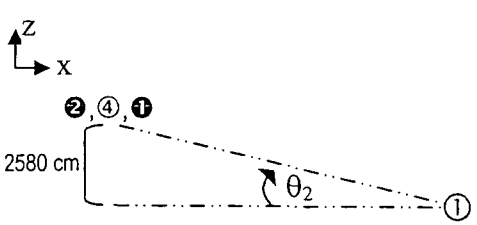

The incident angle (θ) determines the thickness of the concrete shielding seen by the dose location. The larger θ is, the larger the shielding thickness 'd'. For the lateral increase in shielding the following equations are used:

$$d(cm) = \frac{20.32}{\cos(\theta_1)} = \frac{20.32}{\frac{adjacent}{hypotenuse}}$$

$$d(❶) = d(❷) = \frac{20.32}{\frac{10799.6cm}{12030.2cm}} = 22.64\text{cm} \quad \text{and} \quad d(④) = \frac{20.32}{\frac{10799.6cm}{11370.1cm}} = 21.39 \text{ cm}$$

To take into account the vertical increase in shielding the following is used:

$$d(cm) = \frac{d_{lateral}}{\cos(\theta_2)} = \frac{d_{lateral}}{\frac{adjacent}{hypotenuse}}$$

$$d(❶) = d(❷) = \frac{22.64}{\frac{12030.2cm}{12303.7cm}} = 23.2\text{cm and} \quad d(④) = \frac{21.39}{\frac{11370.1cm}{11659.1cm}} = 21.9 \text{ cm}$$

Representative Radionulcides

Using the Table F1.1 from Appendix F, radionuclides with dominant energies in each of the energy groups are chosen to create a representative sample of the dose. Table H-1 shows the nuclides chosen, and their

Ref.

corresponding MeV/dis values.

Table H-1: Representative Nuclides and Their Corresponding MeV/dis values

MeV/dis	Kr89	Xe135m	I131	La140	Sr92
(0 to 0.3)*	0.05026	0.00418	0.02124	0.00409	0.00717
(0.3 to 0.5)	0.08839	0.00000	**0.29740**	0.30205	0.01562
(0.5 to 1)	0.37700	**0.42650**	0.06250	0.37080	0.03786
(1 to 1.5)	0.28430	0.00000	0.00000	0.00503	**1.27841**
(1.5 to 2)	0.33461	0.00000	0.00000	**1.52450**	0.00000
(2+)	**0.69989**	0.00000	0.00000	0.10980	0.00000

Bolded values are the dominant energy value for which the radionuclide was chosen.
*No representative nuclide was chosen for this energy level because low energy levels do not significantly effect the resulting dose in a shine calculation

Curies used as input are converted to MeV/cc by using the conversions:(1Ci = 3.7E10 dis/sec), (1hr = 3600sec) and the appropriate MeV/dis value listed in Table H-1, as well as dividing the value by the volume of the RB.

The amount of curies for each representative nuclide were varied using the MeV/cc values calculated in Appendix F as the goal values. The results are presented in Table H-2.

Table H-2: MeV/hr-cc by Representative Nuclide

Nuclide	Kr89	Xe135m	I131	La140	Sr92	Total
Curies	46740	942620	2014100	20250	80965	-
dis/sec-cc	2.07E+08	4.18E+09	8.94E+09	8.99E+07	3.59E+08	-
	$\frac{MeV}{hr^* \cdot cc} = \frac{Ci \cdot \frac{3.7E10 dis}{Ci \cdot sec} \cdot \frac{3600 sec}{1hr} \cdot \frac{MeV}{Dis}}{Volume_{RB}}$					
(0 to 0.3)	1.04E+07	1.75E+07	1.90E+08	3.68E+05	2.58E+06	2.21E+08
(0.3 to 0.5)	1.83E+07	0.00E+00	2.66E+09	2.71E+07	5.61E+06	2.71E+09
(0.5 to 1)	7.82E+07	1.78E+09	5.59E+08	3.33E+07	1.36E+07	2.47E+09
(1 to 1.5)	5.90E+07	0.00E+00	0.00E+00	4.52E+05	4.59E+08	5.19E+08
(1.5 to 2)	6.94E+07	0.00E+00	0.00E+00	1.37E+08	0.00E+00	2.06E+08
(2+)	1.45E+08	0.00E+00	0.00E+00	9.87E+06	0.00E+00	1.55E+08

*values are normalized over hours so the dose can be calculated as rem/hr to be compatible with RadPro output.

Dose

The shine dose is calculated using the RadPro Calculator computer program [Ref H-2]. RadPro calculated the following by representative radionuclide and dose location:

Location	❶	❷	④
D (cm)	8474.4	12303.7	11659.2
d (cm)	23.2	23.2	21.9
Kr89	0.295	0.122	0.158
Xe135m	2.021	0.830	1.169
I131	3.451	1.417	1.940
La140	0.371	0.155	0.204

Ref.

Sr92	1.069	0.446	0.838
Total (rem/hr)	7.207	2.971	4.308
Dose seen (rem)*	1.297	0.535	0.775

*the total rem is multiplied by 18% calculated earlier in this appendix. (Seen area is ≈18% of the RB)

Summary

The dose amount generated using the QADMOD computer code (Appendix G) is: 0.62 rem.

These results show good agreement between the two methods, (i.e., 0.62 rem falls between 0.535 and 1.297 rem). Consequently, the Appendix G results are considered acceptable.

References

H-1 Calculation H21C043 Rev 1, "Licensing Basis LOCA Control Room Doses"
H-2 McGinnis, R., Rad Pro Calculator, Version 2.30, September 4, 2006

Appendix I Plume Shine to the Control Room Using QADMOD (26 pages)

Background

The methodology used to establish the geometry and activity concentration of the plume surrounding the control room is as follows:

1. Assume a plume translation speed (wind speed) of 2.5 mph (1.12 meter per second).
2. The dilution flow of air at any downwind location must be at least the inverse of the local X/Q. It will, in fact, be greater because the X/Q is a peak centerline X/Q, and the concentration is lower both vertically and in the cross-wind direction away from the centerline. However, if one assumes a uniform concentration in the plume across a plane normal to the plume's direction of travel, the area of that cross-section, A, must be equal to the inverse of the product of the wind speed (1.12 meter per second) and the X/Q; i.e.,

   $$A = [(1.12 \text{ meter per second}) \times X/Q]^{-1}.$$

   The physical meaning of this expression is that a given amount of dilution air must join with the release to form the plume (increasing with distance from the point of release), moving past the control room and reducing the local concentration to the value corresponding to the local X/Q. If the wind speed is low and the X/Q is small (significant dilution), then the flow area will be large.
3. Assume the cross-sectional area is semi-circular in form. Now consider a portion of the plume as a hemisphere of the same radius as the assumed semi-circular cross-section of the plume surrounding the control room. This hemispherical volume is assumed to contain the source at the concentration corresponding to the local X/Q.

Since there are three X/Q sets (turbine building release, reactor building release, and stack release) and five X/Qs per set, there are potentially 15 hemispherical volumes that might have to be considered. However, the reactor building release ends at the end of drawdown (six hours), so only two X/Qs are involved in that contribution. Therefore, there are a total of 12 hemispherical volumes that have to be considered. A QADMOD (Reference I1) run is made for each of the 12 hemispherical source volumes, and the results are summed to obtain the total shine dose to the control room from the passing plumes.

Development of Source Strengths

The computer runs used to develop the source activities are STARDOSE Cases 1Ax, 1Ay, and 1Az from Appendix E. The cumulative activity released for each of those runs is presented in the following set of tables:

Project: Nine Mile Point Nuclear Station Unit: __1__ Disposition: ____

Originator/Date	Reviewer/Date	Calculation No.	Revision
J. Metcalf 12/12/06	D. Leaver 12/12/06	H21C092	00

Ref.

Cumulative Activity Release for Run 1Ax

Hours >	4.17E-01	6.67E-01	9.17E-01	1.17E+00	1.42E+00	1.67E+00	1.92E+00	2.03E+00	2.17E+00	2.42E+00	2.67E+00
Kr83m	4.20E+00	1.35E+01	4.00E+01	8.43E+01	1.45E+02	2.21E+02	3.10E+02	3.55E+02	3.95E+02	4.66E+02	5.33E+02
Kr85m	9.33E+00	3.15E+01	9.76E+01	2.14E+02	3.84E+02	6.07E+02	8.84E+02	1.03E+03	1.16E+03	1.41E+03	1.66E+03
Kr85	5.63E-01	1.96E+00	6.27E+00	1.42E+01	2.61E+01	4.25E+01	6.35E+01	7.50E+01	8.56E+01	1.06E+02	1.27E+02
Kr87	1.59E+01	4.97E+01	1.42E+02	2.90E+02	4.85E+02	7.18E+02	9.81E+02	1.11E+03	1.22E+03	1.41E+03	1.59E+03
Kr88	2.44E+01	8.09E+01	2.46E+02	5.31E+02	9.36E+02	1.46E+03	2.09E+03	2.42E+03	2.72E+03	3.25E+03	3.79E+03
Kr89	1.52E+00	1.59E+00	1.60E+00	1.60E+00	1.60E+00	1.60E+00	1.60E+00	1.60E+00	1.60E+00	1.60E+00	1.60E+00
Xe131m	4.35E-01	1.51E+00	4.84E+00	1.10E+01	2.02E+01	3.27E+01	4.90E+01	5.78E+01	6.59E+01	8.15E+01	9.78E+01
Xe133m	2.32E+00	8.06E+00	2.58E+01	5.82E+01	1.07E+02	1.73E+02	2.59E+02	3.05E+02	3.48E+02	4.29E+02	5.14E+02
Xe133	7.54E+01	2.62E+02	8.38E+02	1.90E+03	3.49E+03	5.66E+03	8.46E+03	9.99E+03	1.14E+04	1.41E+04	1.69E+04
Xe135m	7.28E+00	1.56E+01	2.91E+01	4.19E+01	5.17E+01	5.86E+01	6.31E+01	6.46E+01	6.55E+01	6.66E+01	6.72E+01
Xe135	2.75E+01	9.49E+01	2.98E+02	6.65E+02	1.21E+03	1.94E+03	2.88E+03	3.38E+03	3.84E+03	4.71E+03	5.62E+03
Xe137	5.13E+00	5.65E+00	5.78E+00	5.80E+00	5.80E+00	5.80E+00	5.80E+00	5.80E+00	5.80E+00	5.80E+00	5.80E+00
Xe138	3.24E+01	7.24E+01	1.42E+02	2.12E+02	2.70E+02	3.13E+02	3.43E+02	3.53E+02	3.60E+02	3.69E+02	3.74E+02
I131Org	5.81E-02	1.71E-01	3.77E-01	6.90E-01	1.12E+00	1.68E+00	2.37E+00	2.74E+00	3.09E+00	3.74E+00	4.42E+00
I132Org	7.71E-02	2.15E-01	4.50E-01	7.81E-01	1.21E+00	1.71E+00	2.30E+00	2.60E+00	2.87E+00	3.34E+00	3.81E+00
I133Org	1.17E-01	3.42E-01	7.51E-01	1.37E+00	2.21E+00	3.30E+00	4.63E+00	5.34E+00	6.00E+00	7.23E+00	8.52E+00
I134Org	1.03E-01	2.65E-01	5.09E-01	8.14E-01	1.16E+00	1.53E+00	1.90E+00	2.08E+00	2.22E+00	2.46E+00	2.66E+00
I135Org	1.07E-01	3.10E-01	6.72E-01	1.21E+00	1.93E+00	2.84E+00	3.94E+00	4.52E+00	5.04E+00	6.03E+00	7.03E+00
I131Elem	2.34E-01	4.92E-01	8.22E-01	1.19E+00	1.58E+00	2.02E+00	2.48E+00	2.70E+00	2.90E+00	3.22E+00	3.50E+00
I132Elem	3.14E-01	6.35E-01	1.04E+00	1.47E+00	1.95E+00	2.47E+00	3.05E+00	3.33E+00	3.62E+00	4.17E+00	4.71E+00
I133Elem	4.73E-01	9.89E-01	1.64E+00	2.36E+00	3.14E+00	3.98E+00	4.87E+00	5.30E+00	5.68E+00	6.29E+00	6.80E+00
I134Elem	4.27E-01	8.00E-01	1.19E+00	1.55E+00	1.87E+00	2.15E+00	2.40E+00	2.51E+00	2.59E+00	2.71E+00	2.79E+00
I135Elem	4.35E-01	9.00E-01	1.48E+00	2.10E+00	2.77E+00	3.47E+00	4.20E+00	4.55E+00	4.86E+00	5.35E+00	5.75E+00
I131Part	4.05E+00	8.50E+00	1.44E+01	2.13E+01	2.89E+01	3.72E+01	4.61E+01	5.04E+01	5.42E+01	6.04E+01	6.56E+01
I132Part	5.40E+00	1.09E+01	1.76E+01	2.50E+01	3.24E+01	4.00E+01	4.75E+01	5.10E+01	5.40E+01	5.85E+01	6.20E+01
I133Part	8.16E+00	1.71E+01	2.88E+01	4.25E+01	5.73E+01	7.34E+01	9.04E+01	9.87E+01	1.06E+02	1.18E+02	1.28E+02
I134Part	7.30E+00	1.38E+01	2.08E+01	2.76E+01	3.37E+01	3.91E+01	4.39E+01	4.59E+01	4.76E+01	4.98E+01	5.14E+01
I135Part	7.50E+00	1.55E+01	2.59E+01	3.78E+01	5.04E+01	6.39E+01	7.80E+01	8.47E+01	9.07E+01	9.99E+01	1.08E+02
Rb86	1.15E-02	2.33E-02	3.71E-02	5.33E-02	7.09E-02	9.00E-02	1.10E-01	1.20E-01	1.29E-01	1.44E-01	1.56E-01
Cs134	1.15E+00	2.33E+00	3.72E+00	5.33E+00	7.10E+00	9.01E+00	1.11E+01	1.21E+01	1.30E+01	1.44E+01	1.56E+01
Cs136	3.58E-01	7.27E-01	1.16E+00	1.67E+00	2.22E+00	2.81E+00	3.45E+00	3.76E+00	4.04E+00	4.49E+00	4.86E+00
Cs137	6.84E-01	1.39E+00	2.22E+00	3.18E+00	4.23E+00	5.38E+00	6.60E+00	7.20E+00	7.73E+00	8.58E+00	9.31E+00
Sb127	0.00E+00	3.32E-02	1.48E-01	2.88E-01	4.45E-01	6.18E-01	8.06E-01	8.98E-01	9.79E-01	1.11E+00	1.21E+00
Sb129	0.00E+00	8.95E-02	3.91E-01	7.45E-01	1.12E+00	1.53E+00	1.95E+00	2.15E+00	2.33E+00	2.59E+00	2.81E+00
Te127m	0.00E+00	4.49E-03	2.01E-02	3.91E-02	6.03E-02	8.39E-02	1.09E-01	1.22E-01	1.33E-01	1.51E-01	1.65E-01
Te127	0.00E+00	3.18E-02	1.41E-01	2.72E-01	4.17E-01	5.76E-01	7.46E-01	8.28E-01	9.01E-01	1.02E+00	1.11E+00
Te129m	0.00E+00	1.44E-02	6.44E-02	1.25E-01	1.93E-01	2.69E-01	3.51E-01	3.91E-01	4.27E-01	4.83E-01	5.30E-01
Te129	0.00E+00	6.86E-02	2.88E-01	5.28E-01	7.71E-01	1.02E+00	1.27E+00	1.39E+00	1.50E+00	1.69E+00	1.86E+00
Te131m	0.00E+00	4.34E-02	1.93E-01	3.75E-01	5.77E-01	8.00E-01	1.04E+00	1.16E+00	1.26E+00	1.42E+00	1.56E+00
Te132	0.00E+00	4.24E-01	1.90E+00	3.68E+00	5.68E+00	7.89E+00	1.03E+01	1.15E+01	1.25E+01	1.41E+01	1.55E+01
Ba137m	3.06E-01	6.98E-01	1.17E+00	1.76E+00	2.45E+00	3.22E+00	4.07E+00	4.48E+00	4.97E+00	5.81E+00	6.54E+00

Project: Nine Mile Point Nuclear Station Unit: __1__ Disposition: ____

Originator/Date	Reviewer/Date	Calculation No.	Revision
J. Metcalf 12/12/06	D. Leaver 12/12/06	H21C092	00

Ref.

Ba139	0.00E+00	1.60E-01	6.68E-01	1.21E+00	1.75E+00	2.28E+00	2.79E+00	3.01E+00	3.20E+00	3.47E+00	3.67E+00
Ba140	0.00E+00	2.10E-01	9.39E-01	1.83E+00	2.82E+00	3.92E+00	5.12E+00	5.71E+00	6.22E+00	7.03E+00	7.72E+00
Mo99	0.00E+00	2.86E-02	1.28E-01	2.48E-01	3.82E-01	5.31E-01	6.92E-01	7.71E-01	8.41E-01	9.50E-01	1.04E+00
Tc99m	0.00E+00	2.35E-02	1.04E-01	2.00E-01	3.05E-01	4.19E-01	5.41E-01	6.00E-01	6.53E-01	7.36E-01	8.08E-01
Ru103	0.00E+00	2.41E-02	1.08E-01	2.09E-01	3.23E-01	4.49E-01	5.87E-01	6.54E-01	7.13E-01	8.06E-01	8.85E-01
Ru105	0.00E+00	1.53E-02	6.71E-02	1.28E-01	1.93E-01	2.63E-01	3.36E-01	3.70E-01	4.00E-01	4.46E-01	4.83E-01
Ru106	0.00E+00	9.87E-03	4.41E-02	8.59E-02	1.33E-01	1.85E-01	2.41E-01	2.69E-01	2.93E-01	3.31E-01	3.63E-01
Rh105	0.00E+00	1.57E-02	7.02E-02	1.36E-01	2.10E-01	2.92E-01	3.80E-01	4.23E-01	4.61E-01	5.21E-01	5.71E-01
Y90	0.00E+00	1.44E-04	6.61E-04	1.32E-03	2.08E-03	2.98E-03	4.01E-03	4.54E-03	5.07E-03	6.03E-03	6.99E-03
Y91	0.00E+00	1.39E-03	6.22E-03	1.21E-02	1.87E-02	2.61E-02	3.41E-02	3.80E-02	4.16E-02	4.71E-02	5.18E-02
Y92	0.00E+00	1.97E-03	1.11E-02	2.56E-02	4.62E-02	7.43E-02	1.10E-01	1.30E-01	1.54E-01	2.06E-01	2.63E-01
Y93	0.00E+00	1.66E-03	7.34E-03	1.41E-02	2.16E-02	2.98E-02	3.85E-02	4.28E-02	4.65E-02	5.22E-02	5.69E-02
Zr95	0.00E+00	1.95E-03	8.70E-03	1.69E-02	2.62E-02	3.64E-02	4.75E-02	5.29E-02	5.78E-02	6.53E-02	7.16E-02
Zr97	0.00E+00	1.92E-03	8.53E-03	1.65E-02	2.54E-02	3.51E-02	4.55E-02	5.06E-02	5.51E-02	6.20E-02	6.78E-02
Nb95	0.00E+00	1.96E-03	8.74E-03	1.70E-02	2.63E-02	3.65E-02	4.77E-02	5.32E-02	5.80E-02	6.55E-02	7.19E-02
La140	0.00E+00	2.31E-03	1.07E-02	2.14E-02	3.43E-02	4.97E-02	6.78E-02	7.71E-02	8.68E-02	1.05E-01	1.24E-01
La141	0.00E+00	1.74E-03	7.60E-03	1.44E-02	2.18E-02	2.95E-02	3.76E-02	4.15E-02	4.48E-02	4.98E-02	5.39E-02
La142	0.00E+00	1.42E-03	5.96E-03	1.09E-02	1.59E-02	2.08E-02	2.56E-02	2.77E-02	2.95E-02	3.21E-02	3.41E-02
Pr143	0.00E+00	1.73E-03	7.74E-03	1.51E-02	2.32E-02	3.23E-02	4.22E-02	4.71E-02	5.13E-02	5.80E-02	6.37E-02
Nd147	0.00E+00	7.85E-04	3.51E-03	6.82E-03	1.05E-02	1.46E-02	1.91E-02	2.13E-02	2.32E-02	2.63E-02	2.88E-02
Am241	0.00E+00	3.27E-07	1.46E-06	2.84E-06	4.39E-06	6.11E-06	7.97E-06	8.88E-06	9.69E-06	1.10E-05	1.20E-05
Cm242	0.00E+00	8.08E-05	3.61E-04	7.03E-04	1.09E-03	1.51E-03	1.97E-03	2.20E-03	2.40E-03	2.71E-03	2.97E-03
Cm244	0.00E+00	5.37E-06	2.40E-05	4.67E-05	7.22E-05	1.00E-04	1.31E-04	1.46E-04	1.59E-04	1.80E-04	1.98E-04
Ce141	0.00E+00	4.95E-03	2.21E-02	4.31E-02	6.65E-02	9.25E-02	1.21E-01	1.35E-01	1.47E-01	1.66E-01	1.82E-01
Ce143	0.00E+00	4.50E-03	2.00E-02	3.89E-02	5.99E-02	8.31E-02	1.08E-01	1.20E-01	1.31E-01	1.48E-01	1.62E-01
Ce144	0.00E+00	4.10E-03	1.83E-02	3.57E-02	5.51E-02	7.67E-02	1.00E-01	1.12E-01	1.22E-01	1.38E-01	1.51E-01
Np239	0.00E+00	6.36E-02	2.84E-01	5.51E-01	8.50E-01	1.18E+00	1.54E+00	1.71E+00	1.87E+00	2.11E+00	2.31E+00
Pu238	0.00E+00	1.61E-05	7.19E-05	1.40E-04	2.16E-04	3.00E-04	3.92E-04	4.37E-04	4.77E-04	5.39E-04	5.92E-04
Pu239	0.00E+00	1.49E-06	6.64E-06	1.29E-05	2.00E-05	2.78E-05	3.62E-05	4.04E-05	4.41E-05	4.98E-05	5.47E-05
Pu240	0.00E+00	2.09E-06	9.37E-06	1.82E-05	2.81E-05	3.92E-05	5.11E-05	5.70E-05	6.22E-05	7.03E-05	7.71E-05
Pu241	0.00E+00	6.08E-04	2.72E-03	5.30E-03	8.17E-03	1.14E-02	1.48E-02	1.66E-02	1.81E-02	2.04E-02	2.24E-02
Sr89	0.00E+00	1.09E-01	4.89E-01	9.52E-01	1.47E+00	2.04E+00	2.67E+00	2.97E+00	3.25E+00	3.67E+00	4.03E+00
Sr90	0.00E+00	1.40E-02	6.27E-02	1.22E-01	1.88E-01	2.62E-01	3.42E-01	3.82E-01	4.16E-01	4.71E-01	5.16E-01
Sr91	0.00E+00	1.32E-01	5.86E-01	1.13E+00	1.72E+00	2.38E+00	3.07E+00	3.40E+00	3.70E+00	4.15E+00	4.53E+00
Sr92	0.00E+00	1.29E-01	5.56E-01	1.05E+00	1.56E+00	2.09E+00	2.64E+00	2.89E+00	3.11E+00	3.44E+00	3.70E+00
Hours >	**2.92E+00**	**3.17E+00**	**3.67E+00**	**4.17E+00**	**6.00E+00**	**8.03E+00**	**2.40E+01**	**4.80E+01**	**9.60E+01**	**2.40E+02**	**7.20E+02**
Kr83m	5.98E+02	6.59E+02	7.71E+02	8.70E+02	1.13E+03	1.28E+03	1.43E+03	1.43E+03	1.43E+03	1.43E+03	1.43E+03
Kr85m	1.91E+03	2.16E+03	2.66E+03	3.16E+03	4.82E+03	6.34E+03	1.04E+04	1.06E+04	1.06E+04	1.06E+04	1.06E+04
Kr85	1.49E+02	1.73E+02	2.22E+02	2.74E+02	4.85E+02	7.43E+02	2.97E+03	4.65E+03	7.97E+03	1.75E+04	4.56E+04
Kr87	1.75E+03	1.90E+03	2.15E+03	2.36E+03	2.81E+03	3.01E+03	3.11E+03	3.11E+03	3.11E+03	3.11E+03	3.11E+03
Kr88	4.31E+03	4.83E+03	5.82E+03	6.75E+03	9.60E+03	1.18E+04	1.54E+04	1.54E+04	1.54E+04	1.54E+04	1.54E+04
Kr89	1.60E+00	1.60E+00	1.60E+00	1.60E+00	1.60E+00	1.60E+00	1.60E+00	1.60E+00	1.60E+00	1.60E+00	1.60E+00
Xe131m	1.15E+02	1.33E+02	1.70E+02	2.10E+02	3.72E+02	5.68E+02	2.23E+03	3.42E+03	5.58E+03	1.05E+04	1.79E+04

Project: Nine Mile Point Nuclear Station Unit: __1__ Disposition: ____

Originator/Date	Reviewer/Date	Calculation No.	Revision
J. Metcalf 12/12/06	D. Leaver 12/12/06	H21C092	00

Ref.

Xe133m	6.03E+02	6.96E+02	8.91E+02	1.10E+03	1.91E+03	2.89E+03	1.04E+04	1.47E+04	2.02E+04	2.52E+04	2.60E+04
Xe133	1.98E+04	2.29E+04	2.94E+04	3.62E+04	6.39E+04	9.74E+04	3.75E+05	5.67E+05	8.82E+05	1.44E+06	1.83E+06
Xe135m	6.75E+01	6.77E+01	6.78E+01	6.79E+01	6.79E+01	6.79E+01	6.79E+01	6.79E+01	6.79E+01	6.79E+01	6.79E+01
Xe135	6.57E+03	7.54E+03	9.56E+03	1.17E+04	1.97E+04	2.88E+04	8.07E+04	9.32E+04	9.61E+04	9.62E+04	9.62E+04
Xe137	5.80E+00	5.80E+00	5.80E+00	5.80E+00	5.80E+00	5.80E+00	5.80E+00	5.80E+00	5.80E+00	5.80E+00	5.80E+00
Xe138	3.77E+02	3.78E+02	3.80E+02	3.80E+02	3.80E+02	3.80E+02	3.80E+02	3.80E+02	3.80E+02	3.80E+02	3.80E+02
I131Org	5.13E+00	5.87E+00	7.42E+00	9.05E+00	1.56E+01	2.35E+01	8.89E+01	1.35E+02	2.15E+02	3.80E+02	5.61E+02
I132Org	4.25E+00	4.69E+00	5.50E+00	6.23E+00	8.33E+00	9.76E+00	1.16E+01	1.16E+01	1.16E+01	1.16E+01	1.16E+01
I133Org	9.85E+00	1.12E+01	1.41E+01	1.70E+01	2.84E+01	4.14E+01	1.25E+02	1.58E+02	1.79E+02	1.84E+02	1.84E+02
I134Org	2.84E+00	2.99E+00	3.22E+00	3.39E+00	3.67E+00	3.75E+00	3.77E+00	3.77E+00	3.77E+00	3.77E+00	3.77E+00
I135Org	8.05E+00	9.09E+00	1.12E+01	1.33E+01	2.07E+01	2.81E+01	5.55E+01	5.85E+01	5.87E+01	5.87E+01	5.87E+01
I131Elem	3.74E+00	3.96E+00	4.36E+00	4.70E+00	5.58E+00	6.14E+00	6.83E+00	6.83E+00	6.83E+00	6.83E+00	6.83E+00
I132Elem	5.25E+00	5.79E+00	6.85E+00	7.86E+00	1.10E+01	1.33E+01	1.64E+01	1.65E+01	1.67E+01	1.68E+01	1.69E+01
I133Elem	7.26E+00	7.67E+00	8.39E+00	9.00E+00	1.05E+01	1.15E+01	1.24E+01	1.25E+01	1.25E+01	1.25E+01	1.25E+01
I134Elem	2.85E+00	2.90E+00	2.96E+00	2.99E+00	3.03E+00	3.04E+00	3.04E+00	3.04E+00	3.04E+00	3.04E+00	3.04E+00
I135Elem	6.10E+00	6.41E+00	6.94E+00	7.37E+00	8.38E+00	8.91E+00	9.33E+00	9.33E+00	9.33E+00	9.33E+00	9.33E+00
I131Part	7.02E+01	7.45E+01	8.20E+01	8.84E+01	1.05E+02	1.16E+02	1.29E+02	1.29E+02	1.29E+02	1.29E+02	1.29E+02
I132Part	6.49E+01	6.74E+01	7.13E+01	7.42E+01	7.98E+01	8.18E+01	8.26E+01	8.26E+01	8.26E+01	8.26E+01	8.26E+01
I133Part	1.36E+02	1.44E+02	1.58E+02	1.70E+02	1.99E+02	2.16E+02	2.35E+02	2.35E+02	2.35E+02	2.35E+02	2.35E+02
I134Part	5.26E+01	5.34E+01	5.46E+01	5.52E+01	5.60E+01	5.61E+01	5.61E+01	5.61E+01	5.61E+01	5.61E+01	5.61E+01
I135Part	1.14E+02	1.20E+02	1.30E+02	1.39E+02	1.58E+02	1.68E+02	1.76E+02	1.76E+02	1.76E+02	1.76E+02	1.76E+02
Rb86	1.67E-01	1.76E-01	1.94E-01	2.09E-01	2.48E-01	2.73E-01	3.04E-01	3.04E-01	3.04E-01	3.04E-01	3.04E-01
Cs134	1.67E+01	1.77E+01	1.94E+01	2.10E+01	2.49E+01	2.74E+01	3.05E+01	3.06E+01	3.06E+01	3.06E+01	3.06E+01
Cs136	5.20E+00	5.51E+00	6.06E+00	6.52E+00	7.75E+00	8.53E+00	9.47E+00	9.48E+00	9.48E+00	9.48E+00	9.48E+00
Cs137	9.96E+00	1.06E+01	1.16E+01	1.25E+01	1.49E+01	1.64E+01	1.82E+01	1.82E+01	1.82E+01	1.82E+01	1.82E+01
Sb127	1.31E+00	1.39E+00	1.55E+00	1.68E+00	2.01E+00	2.22E+00	2.48E+00	2.48E+00	2.48E+00	2.48E+00	2.48E+00
Sb129	2.99E+00	3.15E+00	3.42E+00	3.63E+00	4.09E+00	4.31E+00	4.46E+00	4.46E+00	4.46E+00	4.46E+00	4.46E+00
Te127m	1.78E-01	1.90E-01	2.11E-01	2.29E-01	2.76E-01	3.06E-01	3.43E-01	3.43E-01	3.43E-01	3.43E-01	3.43E-01
Te127	1.20E+00	1.28E+00	1.42E+00	1.54E+00	1.86E+00	2.07E+00	2.32E+00	2.32E+00	2.32E+00	2.32E+00	2.32E+00
Te129m	5.71E-01	6.09E-01	6.76E-01	7.34E-01	8.84E-01	9.80E-01	1.10E+00	1.10E+00	1.10E+00	1.10E+00	1.10E+00
Te129	2.02E+00	2.17E+00	2.43E+00	2.65E+00	3.20E+00	3.48E+00	3.67E+00	3.67E+00	3.67E+00	3.67E+00	3.67E+00
Te131m	1.68E+00	1.79E+00	1.98E+00	2.14E+00	2.55E+00	2.80E+00	3.08E+00	3.08E+00	3.08E+00	3.08E+00	3.08E+00
Te132	1.67E+01	1.78E+01	1.97E+01	2.14E+01	2.57E+01	2.83E+01	3.15E+01	3.15E+01	3.15E+01	3.15E+01	3.15E+01
Ba137m	7.19E+00	7.78E+00	8.83E+00	9.73E+00	1.21E+01	1.36E+01	1.55E+01	1.55E+01	1.55E+01	1.55E+01	1.55E+01
Ba139	3.82E+00	3.95E+00	4.13E+00	4.25E+00	4.44E+00	4.49E+00	4.50E+00	4.50E+00	4.50E+00	4.50E+00	4.50E+00
Ba140	8.32E+00	8.88E+00	9.85E+00	1.07E+01	1.29E+01	1.42E+01	1.59E+01	1.59E+01	1.59E+01	1.59E+01	1.59E+01
Mo99	1.12E+00	1.20E+00	1.33E+00	1.44E+00	1.72E+00	1.90E+00	2.11E+00	2.11E+00	2.11E+00	2.11E+00	2.11E+00
Tc99m	8.72E-01	9.31E-01	1.04E+00	1.13E+00	1.37E+00	1.53E+00	1.74E+00	1.74E+00	1.74E+00	1.74E+00	1.74E+00
Ru103	9.54E-01	1.02E+00	1.13E+00	1.23E+00	1.48E+00	1.64E+00	1.83E+00	1.83E+00	1.83E+00	1.83E+00	1.83E+00
Ru105	5.15E-01	5.43E-01	5.89E-01	6.26E-01	7.07E-01	7.45E-01	7.71E-01	7.71E-01	7.71E-01	7.71E-01	7.71E-01
Ru106	3.92E-01	4.18E-01	4.64E-01	5.04E-01	6.07E-01	6.73E-01	7.54E-01	7.55E-01	7.55E-01	7.55E-01	7.55E-01
Rh105	6.16E-01	6.56E-01	7.28E-01	7.89E-01	9.48E-01	1.05E+00	1.16E+00	1.16E+00	1.16E+00	1.16E+00	1.16E+00
Y90	7.95E-03	8.94E-03	1.09E-02	1.29E-02	1.99E-02	2.61E-02	3.88E-02	3.91E-02	3.91E-02	3.91E-02	3.91E-02

Project: Nine Mile Point Nuclear Station Unit: __1__ Disposition: ____

Originator/Date	Reviewer/Date	Calculation No.	Revision
J. Metcalf 12/12/06	D. Leaver 12/12/06	H21C092	00

Ref.

Y91	5.61E-02	6.00E-02	6.70E-02	7.31E-02	8.96E-02	1.01E-01	1.15E-01	1.16E-01	1.16E-01	1.16E-01	1.16E-01
Y92	3.22E-01	3.83E-01	5.06E-01	6.23E-01	9.67E-01	1.19E+00	1.37E+00	1.37E+00	1.37E+00	1.37E+00	1.37E+00
Y93	6.11E-02	6.48E-02	7.12E-02	7.64E-02	8.93E-02	9.65E-02	1.03E-01	1.03E-01	1.03E-01	1.03E-01	1.03E-01
Zr95	7.73E-02	8.24E-02	9.15E-02	9.93E-02	1.20E-01	1.33E-01	1.49E-01	1.49E-01	1.49E-01	1.49E-01	1.49E-01
Zr97	7.29E-02	7.75E-02	8.55E-02	9.22E-02	1.09E-01	1.19E-01	1.29E-01	1.29E-01	1.29E-01	1.29E-01	1.29E-01
Nb95	7.76E-02	8.28E-02	9.19E-02	9.97E-02	1.20E-01	1.33E-01	1.49E-01	1.49E-01	1.49E-01	1.49E-01	1.49E-01
La140	1.44E-01	1.64E-01	2.06E-01	2.49E-01	4.00E-01	5.37E-01	8.16E-01	8.22E-01	8.23E-01	8.23E-01	8.23E-01
La141	5.73E-02	6.03E-02	6.53E-02	6.92E-02	7.77E-02	8.15E-02	8.39E-02	8.39E-02	8.39E-02	8.39E-02	8.39E-02
La142	3.56E-02	3.69E-02	3.88E-02	4.01E-02	4.22E-02	4.28E-02	4.29E-02	4.29E-02	4.29E-02	4.29E-02	4.29E-02
Pr143	6.87E-02	7.33E-02	8.15E-02	8.84E-02	1.07E-01	1.18E-01	1.33E-01	1.33E-01	1.33E-01	1.33E-01	1.33E-01
Nd147	3.11E-02	3.31E-02	3.68E-02	3.99E-02	4.80E-02	5.32E-02	5.94E-02	5.95E-02	5.95E-02	5.95E-02	5.95E-02
Am241	1.30E-05	1.38E-05	1.54E-05	1.67E-05	2.01E-05	2.23E-05	2.49E-05	2.50E-05	2.50E-05	2.50E-05	2.50E-05
Cm242	3.21E-03	3.42E-03	3.80E-03	4.12E-03	4.97E-03	5.50E-03	6.17E-03	6.17E-03	6.17E-03	6.17E-03	6.17E-03
Cm244	2.13E-04	2.27E-04	2.53E-04	2.74E-04	3.30E-04	3.66E-04	4.10E-04	4.11E-04	4.11E-04	4.11E-04	4.11E-04
Ce141	1.96E-01	2.10E-01	2.33E-01	2.52E-01	3.04E-01	3.37E-01	3.77E-01	3.78E-01	3.78E-01	3.78E-01	3.78E-01
Ce143	1.75E-01	1.86E-01	2.06E-01	2.22E-01	2.65E-01	2.92E-01	3.21E-01	3.21E-01	3.21E-01	3.21E-01	3.21E-01
Ce144	1.63E-01	1.74E-01	1.93E-01	2.09E-01	2.52E-01	2.80E-01	3.13E-01	3.13E-01	3.13E-01	3.13E-01	3.13E-01
Np239	2.49E+00	2.65E+00	2.94E+00	3.19E+00	3.82E+00	4.21E+00	4.67E+00	4.67E+00	4.67E+00	4.67E+00	4.67E+00
Pu238	6.38E-04	6.81E-04	7.56E-04	8.20E-04	9.89E-04	1.10E-03	1.23E-03	1.23E-03	1.23E-03	1.23E-03	1.23E-03
Pu239	5.90E-05	6.29E-05	6.98E-05	7.58E-05	9.14E-05	1.01E-04	1.13E-04	1.14E-04	1.14E-04	1.14E-04	1.14E-04
Pu240	8.32E-05	8.87E-05	9.85E-05	1.07E-04	1.29E-04	1.43E-04	1.60E-04	1.60E-04	1.60E-04	1.60E-04	1.60E-04
Pu241	2.42E-02	2.58E-02	2.86E-02	3.10E-02	3.74E-02	4.15E-02	4.65E-02	4.65E-02	4.65E-02	4.65E-02	4.65E-02
Sr89	4.34E+00	4.63E+00	5.14E+00	5.58E+00	6.72E+00	7.45E+00	8.34E+00	8.35E+00	8.35E+00	8.35E+00	8.35E+00
Sr90	5.57E-01	5.94E-01	6.60E-01	7.16E-01	8.63E-01	9.56E-01	1.07E+00	1.07E+00	1.07E+00	1.07E+00	1.07E+00
Sr91	4.86E+00	5.15E+00	5.65E+00	6.07E+00	7.08E+00	7.63E+00	8.14E+00	8.14E+00	8.14E+00	8.14E+00	8.14E+00
Sr92	3.91E+00	4.09E+00	4.39E+00	4.61E+00	5.06E+00	5.23E+00	5.32E+00	5.32E+00	5.32E+00	5.32E+00	5.32E+00

Project: Nine Mile Point Nuclear Station Unit: __1__ Disposition: ____

Originator/Date	Reviewer/Date	Calculation No.	Revision
J. Metcalf 12/12/06	D. Leaver 12/12/06	H21C092	00

Ref.

Cumulative Activity Release for Run 1Ay

Hours >	0.417	0.667	0.917	1.167	1.417	1.667	1.917	2.033	2.167	2.417	2.667
Kr83m	2.55E+01	7.99E+01	2.32E+02	4.73E+02	7.86E+02	1.16E+03	1.57E+03	1.77E+03	2.01E+03	2.41E+03	2.78E+03
Kr85m	5.67E+01	1.86E+02	5.65E+02	1.20E+03	2.07E+03	3.16E+03	4.45E+03	5.11E+03	5.89E+03	7.30E+03	8.66E+03
Kr85	3.42E+00	1.15E+01	3.63E+01	7.94E+01	1.41E+02	2.21E+02	3.19E+02	3.70E+02	4.33E+02	5.48E+02	6.64E+02
Kr87	9.67E+01	2.94E+02	8.23E+02	1.63E+03	2.63E+03	3.77E+03	5.00E+03	5.58E+03	6.24E+03	7.34E+03	8.30E+03
Kr88	1.48E+02	4.77E+02	1.43E+03	2.98E+03	5.06E+03	7.61E+03	1.06E+04	1.20E+04	1.38E+04	1.69E+04	1.98E+04
Kr89	9.57E+00	9.98E+00	1.00E+01	1.00E+01	1.00E+01	1.00E+01	1.00E+01	1.00E+01	1.00E+01	1.00E+01	1.00E+01
Xe131m	2.64E+00	8.91E+00	2.80E+01	6.13E+01	1.09E+02	1.70E+02	2.46E+02	2.86E+02	3.33E+02	4.22E+02	5.11E+02
Xe133m	1.41E+01	4.75E+01	1.49E+02	3.26E+02	5.76E+02	9.00E+02	1.30E+03	1.51E+03	1.76E+03	2.22E+03	2.69E+03
Xe133	4.59E+02	1.55E+03	4.86E+03	1.06E+04	1.88E+04	2.94E+04	4.25E+04	4.94E+04	5.76E+04	7.29E+04	8.83E+04
Xe135m	4.46E+01	9.30E+01	1.71E+02	2.41E+02	2.91E+02	3.25E+02	3.46E+02	3.53E+02	3.58E+02	3.65E+02	3.68E+02
Xe135	1.79E+02	6.03E+02	1.80E+03	3.83E+03	6.65E+03	1.03E+04	1.47E+04	1.70E+04	1.97E+04	2.48E+04	2.98E+04
Xe137	3.21E+01	3.51E+01	3.59E+01	3.60E+01	3.60E+01	3.60E+01	3.60E+01	3.60E+01	3.60E+01	3.60E+01	3.60E+01
Xe138	1.98E+02	4.31E+02	8.30E+02	1.21E+03	1.51E+03	1.72E+03	1.86E+03	1.91E+03	1.95E+03	2.00E+03	2.03E+03
I131Org	2.61E+00	6.28E+00	9.88E+00	1.30E+01	1.63E+01	2.03E+01	2.50E+01	2.75E+01	2.98E+01	3.42E+01	3.86E+01
I132Org	3.47E+00	7.98E+00	1.21E+01	1.55E+01	1.86E+01	2.23E+01	2.63E+01	2.83E+01	3.01E+01	3.33E+01	3.63E+01
I133Org	5.26E+00	1.26E+01	1.97E+01	2.60E+01	3.23E+01	4.01E+01	4.92E+01	5.39E+01	5.84E+01	6.68E+01	7.51E+01
I134Org	4.64E+00	9.96E+00	1.43E+01	1.74E+01	2.00E+01	2.26E+01	2.52E+01	2.63E+01	2.73E+01	2.89E+01	3.03E+01
I135Org	4.83E+00	1.14E+01	1.78E+01	2.32E+01	2.86E+01	3.51E+01	4.26E+01	4.65E+01	5.01E+01	5.67E+01	6.32E+01
I131Elem	7.58E+01	1.77E+02	2.60E+02	3.14E+02	3.53E+02	4.01E+02	4.58E+02	4.87E+02	5.03E+02	5.31E+02	5.59E+02
I132Elem	1.01E+02	2.25E+02	3.21E+02	3.78E+02	4.17E+02	4.61E+02	5.10E+02	5.33E+02	5.46E+02	5.68E+02	5.87E+02
I133Elem	1.53E+02	3.55E+02	5.20E+02	6.26E+02	7.03E+02	7.97E+02	9.06E+02	9.61E+02	9.92E+02	1.05E+03	1.10E+03
I134Elem	1.35E+02	2.81E+02	3.81E+02	4.35E+02	4.67E+02	4.98E+02	5.29E+02	5.42E+02	5.49E+02	5.60E+02	5.68E+02
I135Elem	1.40E+02	3.22E+02	4.69E+02	5.61E+02	6.27E+02	7.05E+02	7.95E+02	8.40E+02	8.65E+02	9.08E+02	9.49E+02
I131Part	4.85E+01	9.55E+01	1.54E+02	2.17E+02	2.80E+02	3.44E+02	4.08E+02	4.38E+02	4.68E+02	5.03E+02	5.20E+02
I132Part	6.48E+01	1.23E+02	1.89E+02	2.56E+02	3.18E+02	3.76E+02	4.31E+02	4.55E+02	4.79E+02	5.04E+02	5.16E+02
I133Part	9.78E+01	1.92E+02	3.08E+02	4.32E+02	5.55E+02	6.79E+02	8.03E+02	8.60E+02	9.18E+02	9.84E+02	1.02E+03
I134Part	8.77E+01	1.56E+02	2.26E+02	2.87E+02	3.38E+02	3.80E+02	4.15E+02	4.29E+02	4.42E+02	4.55E+02	4.60E+02
I135Part	8.99E+01	1.75E+02	2.77E+02	3.85E+02	4.90E+02	5.94E+02	6.96E+02	7.43E+02	7.90E+02	8.42E+02	8.68E+02
Rb86	1.37E-01	2.60E-01	3.92E-01	5.34E-01	6.76E-01	8.21E-01	9.66E-01	1.03E+00	1.10E+00	1.18E+00	1.22E+00
Cs134	1.37E+01	2.60E+01	3.92E+01	5.34E+01	6.77E+01	8.22E+01	9.68E+01	1.04E+02	1.11E+02	1.18E+02	1.22E+02
Cs136	4.30E+00	8.13E+00	1.23E+01	1.67E+01	2.11E+01	2.57E+01	3.02E+01	3.23E+01	3.45E+01	3.69E+01	3.82E+01
Cs137	8.20E+00	1.55E+01	2.34E+01	3.19E+01	4.04E+01	4.91E+01	5.77E+01	6.18E+01	6.60E+01	7.06E+01	7.30E+01
Sb127	0.00E+00	4.23E-01	1.76E+00	3.21E+00	4.65E+00	6.12E+00	7.59E+00	8.28E+00	8.98E+00	9.77E+00	1.02E+01
Sb129	0.00E+00	1.14E+00	4.65E+00	8.30E+00	1.18E+01	1.52E+01	1.86E+01	2.01E+01	2.16E+01	2.32E+01	2.40E+01
Te127m	0.00E+00	5.72E-02	2.38E-01	4.34E-01	6.31E-01	8.31E-01	1.03E+00	1.12E+00	1.22E+00	1.33E+00	1.38E+00
Te127	0.00E+00	4.05E-01	1.68E+00	3.02E+00	4.35E+00	5.68E+00	6.99E+00	7.59E+00	8.20E+00	8.89E+00	9.25E+00
Te129m	0.00E+00	1.83E-01	7.65E-01	1.39E+00	2.02E+00	2.66E+00	3.31E+00	3.61E+00	3.92E+00	4.26E+00	4.44E+00
Te129	0.00E+00	8.74E-01	3.40E+00	5.78E+00	7.85E+00	9.68E+00	1.13E+01	1.19E+01	1.26E+01	1.35E+01	1.40E+01
Te131m	0.00E+00	5.53E-01	2.30E+00	4.17E+00	6.04E+00	7.93E+00	9.82E+00	1.07E+01	1.16E+01	1.26E+01	1.31E+01
Te132	0.00E+00	5.41E+00	2.25E+01	4.10E+01	5.94E+01	7.82E+01	9.70E+01	1.06E+02	1.15E+02	1.25E+02	1.30E+02
Ba137m	3.37E+00	6.73E+00	1.01E+01	1.39E+01	1.77E+01	2.16E+01	2.55E+01	2.74E+01	3.06E+01	3.52E+01	3.75E+01

Project: Nine Mile Point Nuclear Station Unit: __1__ Disposition: ____

Originator/Date	Reviewer/Date	Calculation No.	Revision
J. Metcalf 12/12/06	D. Leaver 12/12/06	H21C092	00

Ref.

Ba139	0.00E+00	2.04E+00	7.95E+00	1.36E+01	1.86E+01	2.31E+01	2.70E+01	2.87E+01	3.03E+01	3.20E+01	3.27E+01
Ba140	0.00E+00	2.68E+00	1.12E+01	2.03E+01	2.95E+01	3.88E+01	4.82E+01	5.26E+01	5.71E+01	6.21E+01	6.46E+01
Mo99	0.00E+00	3.64E-01	1.52E+00	2.76E+00	4.00E+00	5.26E+00	6.52E+00	7.11E+00	7.71E+00	8.39E+00	8.73E+00
Tc99m	0.00E+00	3.00E-01	1.23E+00	2.22E+00	3.17E+00	4.12E+00	5.04E+00	5.47E+00	5.90E+00	6.38E+00	6.63E+00
Ru103	0.00E+00	3.06E-01	1.28E+00	2.33E+00	3.38E+00	4.45E+00	5.52E+00	6.03E+00	6.54E+00	7.12E+00	7.41E+00
Ru105	0.00E+00	1.95E-01	7.98E-01	1.42E+00	2.03E+00	2.62E+00	3.19E+00	3.45E+00	3.71E+00	3.99E+00	4.13E+00
Ru106	0.00E+00	1.26E-01	5.24E-01	9.55E-01	1.39E+00	1.83E+00	2.27E+00	2.47E+00	2.69E+00	2.92E+00	3.04E+00
Rh105	0.00E+00	2.01E-01	8.34E-01	1.52E+00	2.20E+00	2.89E+00	3.57E+00	3.89E+00	4.22E+00	4.59E+00	4.78E+00
Y90	0.00E+00	1.84E-03	7.77E-03	1.42E-02	2.06E-02	2.72E-02	3.37E-02	3.68E-02	4.01E-02	4.45E-02	4.72E-02
Y91	0.00E+00	1.77E-02	7.39E-02	1.35E-01	1.95E-01	2.57E-01	3.20E-01	3.49E-01	3.78E-01	4.12E-01	4.29E-01
Y92	0.00E+00	2.47E-02	1.19E-01	2.21E-01	3.17E-01	4.11E-01	5.01E-01	5.41E-01	6.04E-01	7.46E-01	8.62E-01
Y93	0.00E+00	2.11E-02	8.72E-02	1.57E-01	2.27E-01	2.96E-01	3.64E-01	3.96E-01	4.28E-01	4.63E-01	4.81E-01
Zr95	0.00E+00	2.48E-02	1.03E-01	1.88E-01	2.73E-01	3.60E-01	4.47E-01	4.88E-01	5.29E-01	5.76E-01	6.00E-01
Zr97	0.00E+00	2.45E-02	1.01E-01	1.84E-01	2.65E-01	3.48E-01	4.30E-01	4.68E-01	5.06E-01	5.49E-01	5.71E-01
Nb95	0.00E+00	2.49E-02	1.04E-01	1.89E-01	2.75E-01	3.62E-01	4.49E-01	4.90E-01	5.32E-01	5.78E-01	6.02E-01
La140	0.00E+00	2.93E-02	1.25E-01	2.28E-01	3.32E-01	4.37E-01	5.42E-01	5.91E-01	6.46E-01	7.23E-01	7.73E-01
La141	0.00E+00	2.22E-02	9.04E-02	1.61E-01	2.29E-01	2.95E-01	3.58E-01	3.87E-01	4.15E-01	4.47E-01	4.62E-01
La142	0.00E+00	1.81E-02	7.10E-02	1.22E-01	1.68E-01	2.10E-01	2.47E-01	2.63E-01	2.79E-01	2.95E-01	3.02E-01
Pr143	0.00E+00	2.21E-02	9.20E-02	1.67E-01	2.43E-01	3.20E-01	3.97E-01	4.33E-01	4.70E-01	5.12E-01	5.33E-01
Nd147	0.00E+00	9.99E-03	4.17E-02	7.59E-02	1.10E-01	1.45E-01	1.80E-01	1.96E-01	2.13E-01	2.32E-01	2.41E-01
Am241	0.00E+00	4.16E-06	1.73E-05	3.16E-05	4.59E-05	6.04E-05	7.51E-05	8.19E-05	8.89E-05	9.67E-05	1.01E-04
Cm242	0.00E+00	1.03E-03	4.29E-03	7.82E-03	1.13E-02	1.49E-02	1.86E-02	2.02E-02	2.20E-02	2.39E-02	2.49E-02
Cm244	0.00E+00	6.84E-05	2.85E-04	5.20E-04	7.55E-04	9.94E-04	1.23E-03	1.35E-03	1.46E-03	1.59E-03	1.66E-03
Ce141	0.00E+00	6.31E-02	2.63E-01	4.79E-01	6.95E-01	9.16E-01	1.14E+00	1.24E+00	1.35E+00	1.46E+00	1.53E+00
Ce143	0.00E+00	5.73E-02	2.38E-01	4.33E-01	6.27E-01	8.23E-01	1.02E+00	1.11E+00	1.20E+00	1.31E+00	1.36E+00
Ce144	0.00E+00	5.22E-02	2.18E-01	3.97E-01	5.76E-01	7.59E-01	9.42E-01	1.03E+00	1.12E+00	1.21E+00	1.26E+00
Np239	0.00E+00	8.10E-01	3.37E+00	6.13E+00	8.89E+00	1.17E+01	1.45E+01	1.58E+01	1.71E+01	1.86E+01	1.94E+01
Pu238	0.00E+00	2.05E-04	8.54E-04	1.56E-03	2.26E-03	2.97E-03	3.69E-03	4.03E-03	4.37E-03	4.76E-03	4.95E-03
Pu239	0.00E+00	1.89E-05	7.89E-05	1.44E-04	2.09E-04	2.75E-04	3.41E-04	3.72E-04	4.04E-04	4.40E-04	4.58E-04
Pu240	0.00E+00	2.67E-05	1.11E-04	2.03E-04	2.94E-04	3.88E-04	4.81E-04	5.25E-04	5.70E-04	6.20E-04	6.46E-04
Pu241	0.00E+00	7.75E-03	3.23E-02	5.89E-02	8.55E-02	1.13E-01	1.40E-01	1.53E-01	1.66E-01	1.80E-01	1.88E-01
Sr89	0.00E+00	1.39E+00	5.81E+00	1.06E+01	1.54E+01	2.02E+01	2.51E+01	2.74E+01	2.98E+01	3.24E+01	3.37E+01
Sr90	0.00E+00	1.79E-01	7.45E-01	1.36E+00	1.97E+00	2.60E+00	3.22E+00	3.52E+00	3.82E+00	4.15E+00	4.32E+00
Sr91	0.00E+00	1.69E+00	6.96E+00	1.26E+01	1.81E+01	2.36E+01	2.90E+01	3.15E+01	3.41E+01	3.69E+01	3.83E+01
Sr92	0.00E+00	1.64E+00	6.62E+00	1.17E+01	1.64E+01	2.10E+01	2.52E+01	2.71E+01	2.90E+01	3.10E+01	3.20E+01
Hours >	**2.917**	**3.167**	**3.667**	**4.167**	**6.00E+00**	**8.03E+00**	**2.40E+01**	**4.80E+01**	**9.60E+01**	**2.40E+02**	**7.20E+02**
Kr83m	3.12E+03	3.42E+03	3.95E+03	4.39E+03	5.44E+03	5.44E+03	5.44E+03	5.44E+03	5.44E+03	5.44E+03	5.44E+03
Kr85m	9.96E+03	1.12E+04	1.36E+04	1.58E+04	2.25E+04	2.25E+04	2.25E+04	2.25E+04	2.25E+04	2.25E+04	2.25E+04
Kr85	7.80E+02	8.95E+02	1.13E+03	1.36E+03	2.20E+03	2.20E+03	2.20E+03	2.20E+03	2.20E+03	2.20E+03	2.20E+03
Kr87	9.14E+03	9.87E+03	1.11E+04	1.20E+04	1.38E+04	1.38E+04	1.38E+04	1.38E+04	1.38E+04	1.38E+04	1.38E+04
Kr88	2.25E+04	2.50E+04	2.97E+04	3.39E+04	4.54E+04	4.54E+04	4.54E+04	4.54E+04	4.54E+04	4.54E+04	4.54E+04
Kr89	1.00E+01	1.00E+01	1.00E+01	1.00E+01	1.00E+01	1.00E+01	1.00E+01	1.00E+01	1.00E+01	1.00E+01	1.00E+01
Xe131m	6.00E+02	6.89E+02	8.66E+02	1.04E+03	1.69E+03	1.69E+03	1.69E+03	1.69E+03	1.69E+03	1.69E+03	1.69E+03

Project: Nine Mile Point Nuclear Station Unit: __1__ Disposition: ____

Originator/Date	Reviewer/Date	Calculation No.	Revision
J. Metcalf 12/12/06	D. Leaver 12/12/06	H21C092	00

Ref.

Xe133m	3.15E+03	3.61E+03	4.53E+03	5.44E+03	8.72E+03	8.72E+03	8.72E+03	8.72E+03	8.72E+03	8.72E+03	8.72E+03
Xe133	1.04E+05	1.19E+05	1.49E+05	1.80E+05	2.91E+05	2.91E+05	2.91E+05	2.91E+05	2.91E+05	2.91E+05	2.91E+05
Xe135m	3.70E+02	3.70E+02	3.71E+02	3.71E+02	3.71E+02	3.71E+02	3.71E+02	3.71E+02	3.71E+02	3.71E+02	3.71E+02
Xe135	3.48E+04	3.98E+04	4.97E+04	5.95E+04	9.34E+04	9.34E+04	9.34E+04	9.34E+04	9.34E+04	9.34E+04	9.34E+04
Xe137	3.60E+01	3.60E+01	3.60E+01	3.60E+01	3.60E+01	3.60E+01	3.60E+01	3.60E+01	3.60E+01	3.60E+01	3.60E+01
Xe138	2.04E+03	2.05E+03	2.06E+03	2.06E+03	2.06E+03	2.06E+03	2.06E+03	2.06E+03	2.06E+03	2.06E+03	2.06E+03
I131Org	4.30E+01	4.74E+01	5.61E+01	6.49E+01	9.07E+01	9.07E+01	9.07E+01	9.07E+01	9.07E+01	9.07E+01	9.07E+01
I132Org	3.91E+01	4.16E+01	4.62E+01	5.02E+01	5.85E+01	5.85E+01	5.85E+01	5.85E+01	5.85E+01	5.85E+01	5.85E+01
I133Org	8.33E+01	9.14E+01	1.07E+02	1.23E+02	1.68E+02	1.68E+02	1.68E+02	1.68E+02	1.68E+02	1.68E+02	1.68E+02
I134Org	3.13E+01	3.22E+01	3.36E+01	3.44E+01	3.56E+01	3.56E+01	3.56E+01	3.56E+01	3.56E+01	3.56E+01	3.56E+01
I135Org	6.95E+01	7.56E+01	8.74E+01	9.86E+01	1.28E+02	1.28E+02	1.28E+02	1.28E+02	1.28E+02	1.28E+02	1.28E+02
I131Elem	5.86E+02	6.13E+02	6.67E+02	7.20E+02	7.20E+02	7.20E+02	7.20E+02	7.20E+02	7.20E+02	7.20E+02	7.20E+02
I132Elem	6.05E+02	6.21E+02	6.50E+02	6.74E+02	6.75E+02	6.75E+02	6.75E+02	6.75E+02	6.76E+02	6.76E+02	6.76E+02
I133Elem	1.15E+03	1.20E+03	1.30E+03	1.39E+03	1.39E+03	1.39E+03	1.39E+03	1.39E+03	1.39E+03	1.39E+03	1.39E+03
I134Elem	5.75E+02	5.80E+02	5.88E+02	5.94E+02	5.94E+02	5.94E+02	5.94E+02	5.94E+02	5.94E+02	5.94E+02	5.94E+02
I135Elem	9.88E+02	1.03E+03	1.10E+03	1.17E+03	1.17E+03	1.17E+03	1.17E+03	1.17E+03	1.17E+03	1.17E+03	1.17E+03
I131Part	5.29E+02	5.35E+02	5.41E+02	5.44E+02	5.46E+02	5.46E+02	5.46E+02	5.46E+02	5.46E+02	5.46E+02	5.46E+02
I132Part	5.22E+02	5.25E+02	5.28E+02	5.30E+02	5.30E+02	5.30E+02	5.30E+02	5.30E+02	5.30E+02	5.30E+02	5.30E+02
I133Part	1.03E+03	1.04E+03	1.06E+03	1.06E+03	1.06E+03	1.06E+03	1.06E+03	1.06E+03	1.06E+03	1.06E+03	1.06E+03
I134Part	4.62E+02	4.63E+02	4.64E+02	4.65E+02	4.65E+02	4.65E+02	4.65E+02	4.65E+02	4.65E+02	4.65E+02	4.65E+02
I135Part	8.81E+02	8.89E+02	8.97E+02	9.01E+02	9.03E+02	9.03E+02	9.03E+02	9.03E+02	9.03E+02	9.03E+02	9.03E+02
Rb86	1.24E+00	1.26E+00	1.27E+00	1.27E+00	1.28E+00	1.28E+00	1.28E+00	1.28E+00	1.28E+00	1.28E+00	1.28E+00
Cs134	1.24E+02	1.26E+02	1.27E+02	1.28E+02	1.28E+02	1.28E+02	1.28E+02	1.28E+02	1.28E+02	1.28E+02	1.28E+02
Cs136	3.88E+01	3.92E+01	3.97E+01	3.98E+01	4.00E+01	4.00E+01	4.00E+01	4.00E+01	4.00E+01	4.00E+01	4.00E+01
Cs137	7.43E+01	7.50E+01	7.59E+01	7.62E+01	7.65E+01	7.65E+01	7.65E+01	7.65E+01	7.65E+01	7.65E+01	7.65E+01
Sb127	1.04E+01	1.05E+01	1.07E+01	1.07E+01	1.08E+01	1.08E+01	1.08E+01	1.08E+01	1.08E+01	1.08E+01	1.08E+01
Sb129	2.44E+01	2.47E+01	2.49E+01	2.50E+01	2.51E+01	2.51E+01	2.51E+01	2.51E+01	2.51E+01	2.51E+01	2.51E+01
Te127m	1.41E+00	1.43E+00	1.45E+00	1.46E+00	1.46E+00	1.46E+00	1.46E+00	1.46E+00	1.46E+00	1.46E+00	1.46E+00
Te127	9.43E+00	9.55E+00	9.68E+00	9.73E+00	9.77E+00	9.77E+00	9.77E+00	9.77E+00	9.77E+00	9.77E+00	9.77E+00
Te129m	4.53E+00	4.59E+00	4.65E+00	4.68E+00	4.70E+00	4.70E+00	4.70E+00	4.70E+00	4.70E+00	4.70E+00	4.70E+00
Te129	1.43E+01	1.45E+01	1.47E+01	1.48E+01	1.48E+01	1.48E+01	1.48E+01	1.48E+01	1.48E+01	1.48E+01	1.48E+01
Te131m	1.34E+01	1.35E+01	1.37E+01	1.38E+01	1.38E+01	1.38E+01	1.38E+01	1.38E+01	1.38E+01	1.38E+01	1.38E+01
Te132	1.33E+02	1.34E+02	1.36E+02	1.37E+02	1.37E+02	1.37E+02	1.37E+02	1.37E+02	1.37E+02	1.37E+02	1.37E+02
Ba137m	3.88E+01	3.96E+01	4.04E+01	4.08E+01	4.11E+01	4.11E+01	4.11E+01	4.11E+01	4.11E+01	4.11E+01	4.11E+01
Ba139	3.31E+01	3.33E+01	3.35E+01	3.35E+01	3.35E+01	3.35E+01	3.35E+01	3.35E+01	3.35E+01	3.35E+01	3.35E+01
Ba140	6.60E+01	6.69E+01	6.77E+01	6.81E+01	6.84E+01	6.84E+01	6.84E+01	6.84E+01	6.84E+01	6.84E+01	6.84E+01
Mo99	8.91E+00	9.03E+00	9.15E+00	9.20E+00	9.24E+00	9.24E+00	9.24E+00	9.24E+00	9.24E+00	9.24E+00	9.24E+00
Tc99m	6.77E+00	6.85E+00	6.95E+00	6.98E+00	7.02E+00	7.02E+00	7.02E+00	7.02E+00	7.02E+00	7.02E+00	7.02E+00
Ru103	7.57E+00	7.66E+00	7.77E+00	7.81E+00	7.85E+00	7.85E+00	7.85E+00	7.85E+00	7.85E+00	7.85E+00	7.85E+00
Ru105	4.20E+00	4.25E+00	4.29E+00	4.30E+00	4.32E+00	4.32E+00	4.32E+00	4.32E+00	4.32E+00	4.32E+00	4.32E+00
Ru106	3.11E+00	3.15E+00	3.19E+00	3.21E+00	3.22E+00	3.22E+00	3.22E+00	3.22E+00	3.22E+00	3.22E+00	3.22E+00
Rh105	4.87E+00	4.94E+00	5.00E+00	5.03E+00	5.05E+00	5.05E+00	5.05E+00	5.05E+00	5.05E+00	5.05E+00	5.05E+00
Y90	4.89E-02	5.01E-02	5.16E-02	5.23E-02	5.32E-02	5.32E-02	5.32E-02	5.32E-02	5.32E-02	5.32E-02	5.32E-02

Ref.

Y91	4.39E-01	4.45E-01	4.51E-01	4.54E-01	4.56E-01	4.56E-01	4.56E-01	4.56E-01	4.56E-01	4.56E-01	4.56E-01
Y92	9.44E-01	1.01E+00	1.09E+00	1.13E+00	1.17E+00	1.17E+00	1.17E+00	1.17E+00	1.17E+00	1.17E+00	1.17E+00
Y93	4.90E-01	4.96E-01	5.02E-01	5.04E-01	5.06E-01	5.06E-01	5.06E-01	5.06E-01	5.06E-01	5.06E-01	5.06E-01
Zr95	6.13E-01	6.20E-01	6.29E-01	6.32E-01	6.35E-01	6.35E-01	6.35E-01	6.35E-01	6.35E-01	6.35E-01	6.35E-01
Zr97	5.82E-01	5.89E-01	5.97E-01	6.00E-01	6.02E-01	6.02E-01	6.02E-01	6.02E-01	6.02E-01	6.02E-01	6.02E-01
Nb95	6.15E-01	6.23E-01	6.31E-01	6.35E-01	6.38E-01	6.38E-01	6.38E-01	6.38E-01	6.38E-01	6.38E-01	6.38E-01
La140	8.06E-01	8.30E-01	8.60E-01	8.76E-01	8.94E-01	8.94E-01	8.94E-01	8.94E-01	8.94E-01	8.94E-01	8.94E-01
La141	4.69E-01	4.74E-01	4.79E-01	4.80E-01	4.82E-01	4.82E-01	4.82E-01	4.82E-01	4.82E-01	4.82E-01	4.82E-01
La142	3.06E-01	3.08E-01	3.10E-01	3.10E-01	3.10E-01	3.10E-01	3.10E-01	3.10E-01	3.10E-01	3.10E-01	3.10E-01
Pr143	5.44E-01	5.51E-01	5.59E-01	5.62E-01	5.64E-01	5.64E-01	5.64E-01	5.64E-01	5.64E-01	5.64E-01	5.64E-01
Nd147	2.46E-01	2.50E-01	2.53E-01	2.54E-01	2.55E-01	2.55E-01	2.55E-01	2.55E-01	2.55E-01	2.55E-01	2.55E-01
Am241	1.03E-04	1.04E-04	1.06E-04	1.06E-04	1.07E-04	1.07E-04	1.07E-04	1.07E-04	1.07E-04	1.07E-04	1.07E-04
Cm242	2.54E-02	2.57E-02	2.61E-02	2.62E-02	2.64E-02	2.64E-02	2.64E-02	2.64E-02	2.64E-02	2.64E-02	2.64E-02
Cm244	1.69E-03	1.71E-03	1.74E-03	1.75E-03	1.75E-03	1.75E-03	1.75E-03	1.75E-03	1.75E-03	1.75E-03	1.75E-03
Ce141	1.56E+00	1.58E+00	1.60E+00	1.61E+00	1.62E+00	1.62E+00	1.62E+00	1.62E+00	1.62E+00	1.62E+00	1.62E+00
Ce143	1.39E+00	1.41E+00	1.42E+00	1.43E+00	1.44E+00	1.44E+00	1.44E+00	1.44E+00	1.44E+00	1.44E+00	1.44E+00
Ce144	1.29E+00	1.31E+00	1.33E+00	1.33E+00	1.34E+00	1.34E+00	1.34E+00	1.34E+00	1.34E+00	1.34E+00	1.34E+00
Np239	1.98E+01	2.00E+01	2.03E+01	2.04E+01	2.05E+01	2.05E+01	2.05E+01	2.05E+01	2.05E+01	2.05E+01	2.05E+01
Pu238	5.06E-03	5.12E-03	5.19E-03	5.22E-03	5.25E-03	5.25E-03	5.25E-03	5.25E-03	5.25E-03	5.25E-03	5.25E-03
Pu239	4.68E-04	4.74E-04	4.80E-04	4.83E-04	4.85E-04	4.85E-04	4.85E-04	4.85E-04	4.85E-04	4.85E-04	4.85E-04
Pu240	6.59E-04	6.68E-04	6.77E-04	6.81E-04	6.84E-04	6.84E-04	6.84E-04	6.84E-04	6.84E-04	6.84E-04	6.84E-04
Pu241	1.92E-01	1.94E-01	1.97E-01	1.98E-01	1.99E-01	1.99E-01	1.99E-01	1.99E-01	1.99E-01	1.99E-01	1.99E-01
Sr89	3.44E+01	3.49E+01	3.53E+01	3.55E+01	3.57E+01	3.57E+01	3.57E+01	3.57E+01	3.57E+01	3.57E+01	3.57E+01
Sr90	4.42E+00	4.47E+00	4.53E+00	4.56E+00	4.58E+00	4.58E+00	4.58E+00	4.58E+00	4.58E+00	4.58E+00	4.58E+00
Sr91	3.90E+01	3.95E+01	3.99E+01	4.01E+01	4.03E+01	4.03E+01	4.03E+01	4.03E+01	4.03E+01	4.03E+01	4.03E+01
Sr92	3.25E+01	3.28E+01	3.31E+01	3.32E+01	3.32E+01	3.32E+01	3.32E+01	3.32E+01	3.32E+01	3.32E+01	3.32E+01

Project: Nine Mile Point Nuclear Station Unit: __1__ Disposition: ____

Originator/Date	Reviewer/Date	Calculation No.	Revision
J. Metcalf 12/12/06	D. Leaver 12/12/06	H21C092	00

Ref.

Cumulative Activity Release for Run 1Az

Hours >	0.417	0.667	0.917	1.167	1.417	1.667	1.917	2.033	2.167	2.417	2.667
Kr83m	0.00E+00	0.00E+00	0.00E+00	0.00E+00	0.00E+00	0.00E+00	0.00E+00	0.00E+00	0.00E+00	0.00E+00	0.00E+00
Kr85m	0.00E+00	0.00E+00	0.00E+00	0.00E+00	0.00E+00	0.00E+00	0.00E+00	0.00E+00	0.00E+00	0.00E+00	0.00E+00
Kr85	0.00E+00	0.00E+00	0.00E+00	0.00E+00	0.00E+00	0.00E+00	0.00E+00	0.00E+00	0.00E+00	0.00E+00	0.00E+00
Kr87	0.00E+00	0.00E+00	0.00E+00	0.00E+00	0.00E+00	0.00E+00	0.00E+00	0.00E+00	0.00E+00	0.00E+00	0.00E+00
Kr88	0.00E+00	0.00E+00	0.00E+00	0.00E+00	0.00E+00	0.00E+00	0.00E+00	0.00E+00	0.00E+00	0.00E+00	0.00E+00
Kr89	0.00E+00	0.00E+00	0.00E+00	0.00E+00	0.00E+00	0.00E+00	0.00E+00	0.00E+00	0.00E+00	0.00E+00	0.00E+00
Xe131m	0.00E+00	0.00E+00	0.00E+00	0.00E+00	0.00E+00	0.00E+00	0.00E+00	0.00E+00	0.00E+00	0.00E+00	0.00E+00
Xe133m	0.00E+00	0.00E+00	0.00E+00	0.00E+00	0.00E+00	0.00E+00	0.00E+00	0.00E+00	0.00E+00	0.00E+00	0.00E+00
Xe133	0.00E+00	9.68E-01	6.52E+00	2.02E+01	4.42E+01	7.99E+01	1.30E+02	1.58E+02	1.98E+02	2.85E+02	3.91E+02
Xe135m	0.00E+00	0.00E+00	0.00E+00	0.00E+00	0.00E+00	0.00E+00	0.00E+00	0.00E+00	0.00E+00	0.00E+00	0.00E+00
Xe135	0.00E+00	1.20E+01	8.00E+01	2.44E+02	5.28E+02	9.43E+02	1.51E+03	1.83E+03	2.28E+03	3.24E+03	4.39E+03
Xe137	0.00E+00	0.00E+00	0.00E+00	0.00E+00	0.00E+00	0.00E+00	0.00E+00	0.00E+00	0.00E+00	0.00E+00	0.00E+00
Xe138	0.00E+00	0.00E+00	0.00E+00	0.00E+00	0.00E+00	0.00E+00	0.00E+00	0.00E+00	0.00E+00	0.00E+00	0.00E+00
I131Org	0.00E+00	1.05E-01	5.74E-01	1.45E+00	2.70E+00	4.23E+00	6.06E+00	7.00E+00	8.19E+00	1.04E+01	1.26E+01
I132Org	0.00E+00	1.28E-01	6.61E-01	1.59E+00	2.81E+00	4.21E+00	5.76E+00	6.52E+00	7.44E+00	9.06E+00	1.06E+01
I133Org	0.00E+00	2.10E-01	1.14E+00	2.88E+00	5.31E+00	8.29E+00	1.18E+01	1.36E+01	1.59E+01	2.01E+01	2.42E+01
I134Org	0.00E+00	1.47E-01	7.00E-01	1.55E+00	2.55E+00	3.56E+00	4.55E+00	4.99E+00	5.50E+00	6.30E+00	6.97E+00
I135Org	0.00E+00	1.89E-01	1.01E+00	2.52E+00	4.59E+00	7.09E+00	9.99E+00	1.15E+01	1.33E+01	1.66E+01	1.99E+01
I131Elem	0.00E+00	1.70E+00	9.28E+00	2.35E+01	4.36E+01	6.84E+01	9.79E+01	1.13E+02	1.32E+02	1.68E+02	2.04E+02
I132Elem	0.00E+00	2.06E+00	1.07E+01	2.57E+01	4.55E+01	6.81E+01	9.31E+01	1.05E+02	1.20E+02	1.46E+02	1.71E+02
I133Elem	0.00E+00	3.40E+00	1.84E+01	4.65E+01	8.58E+01	1.34E+02	1.91E+02	2.20E+02	2.57E+02	3.25E+02	3.92E+02
I134Elem	0.00E+00	2.38E+00	1.13E+01	2.51E+01	4.12E+01	5.76E+01	7.35E+01	8.07E+01	8.88E+01	1.02E+02	1.13E+02
I135Elem	0.00E+00	3.05E+00	1.63E+01	4.07E+01	7.43E+01	1.15E+02	1.61E+02	1.85E+02	2.15E+02	2.69E+02	3.21E+02
I131Part	0.00E+00	0.00E+00	0.00E+00	0.00E+00	0.00E+00	0.00E+00	0.00E+00	0.00E+00	0.00E+00	0.00E+00	0.00E+00
I132Part	0.00E+00	0.00E+00	0.00E+00	0.00E+00	0.00E+00	0.00E+00	0.00E+00	0.00E+00	0.00E+00	0.00E+00	0.00E+00
I133Part	0.00E+00	0.00E+00	0.00E+00	0.00E+00	0.00E+00	0.00E+00	0.00E+00	0.00E+00	0.00E+00	0.00E+00	0.00E+00
I134Part	0.00E+00	0.00E+00	0.00E+00	0.00E+00	0.00E+00	0.00E+00	0.00E+00	0.00E+00	0.00E+00	0.00E+00	0.00E+00
I135Part	0.00E+00	0.00E+00	0.00E+00	0.00E+00	0.00E+00	0.00E+00	0.00E+00	0.00E+00	0.00E+00	0.00E+00	0.00E+00
Rb86	0.00E+00	0.00E+00	0.00E+00	0.00E+00	0.00E+00	0.00E+00	0.00E+00	0.00E+00	0.00E+00	0.00E+00	0.00E+00
Cs134	0.00E+00	0.00E+00	0.00E+00	0.00E+00	0.00E+00	0.00E+00	0.00E+00	0.00E+00	0.00E+00	0.00E+00	0.00E+00
Cs136	0.00E+00	0.00E+00	0.00E+00	0.00E+00	0.00E+00	0.00E+00	0.00E+00	0.00E+00	0.00E+00	0.00E+00	0.00E+00
Cs137	0.00E+00	0.00E+00	0.00E+00	0.00E+00	0.00E+00	0.00E+00	0.00E+00	0.00E+00	0.00E+00	0.00E+00	0.00E+00
Sb127	0.00E+00	0.00E+00	0.00E+00	0.00E+00	0.00E+00	0.00E+00	0.00E+00	0.00E+00	0.00E+00	0.00E+00	0.00E+00
Sb129	0.00E+00	0.00E+00	0.00E+00	0.00E+00	0.00E+00	0.00E+00	0.00E+00	0.00E+00	0.00E+00	0.00E+00	0.00E+00
Te127m	0.00E+00	0.00E+00	0.00E+00	0.00E+00	0.00E+00	0.00E+00	0.00E+00	0.00E+00	0.00E+00	0.00E+00	0.00E+00
Te127	0.00E+00	0.00E+00	0.00E+00	0.00E+00	0.00E+00	0.00E+00	0.00E+00	0.00E+00	0.00E+00	0.00E+00	0.00E+00
Te129m	0.00E+00	0.00E+00	0.00E+00	0.00E+00	0.00E+00	0.00E+00	0.00E+00	0.00E+00	0.00E+00	0.00E+00	0.00E+00
Te129	0.00E+00	0.00E+00	0.00E+00	0.00E+00	0.00E+00	0.00E+00	0.00E+00	0.00E+00	0.00E+00	0.00E+00	0.00E+00
Te131m	0.00E+00	0.00E+00	0.00E+00	0.00E+00	0.00E+00	0.00E+00	0.00E+00	0.00E+00	0.00E+00	0.00E+00	0.00E+00
Te132	0.00E+00	0.00E+00	0.00E+00	0.00E+00	0.00E+00	0.00E+00	0.00E+00	0.00E+00	0.00E+00	0.00E+00	0.00E+00
Ba137m	0.00E+00	0.00E+00	0.00E+00	0.00E+00	0.00E+00	0.00E+00	0.00E+00	0.00E+00	0.00E+00	0.00E+00	0.00E+00

Project: Nine Mile Point Nuclear Station Unit: __1__ Disposition: ____

Originator/Date	Reviewer/Date	Calculation No.	Revision
J. Metcalf 12/12/06	D. Leaver 12/12/06	H21C092	00

Ref.

Ba139	0.00E+00	0.00E+00	0.00E+00	0.00E+00	0.00E+00	0.00E+00	0.00E+00	0.00E+00	0.00E+00	0.00E+00	0.00E+00
Ba140	0.00E+00	0.00E+00	0.00E+00	0.00E+00	0.00E+00	0.00E+00	0.00E+00	0.00E+00	0.00E+00	0.00E+00	0.00E+00
Mo99	0.00E+00	0.00E+00	0.00E+00	0.00E+00	0.00E+00	0.00E+00	0.00E+00	0.00E+00	0.00E+00	0.00E+00	0.00E+00
Tc99m	0.00E+00	0.00E+00	0.00E+00	0.00E+00	0.00E+00	0.00E+00	0.00E+00	0.00E+00	0.00E+00	0.00E+00	0.00E+00
Ru103	0.00E+00	0.00E+00	0.00E+00	0.00E+00	0.00E+00	0.00E+00	0.00E+00	0.00E+00	0.00E+00	0.00E+00	0.00E+00
Ru105	0.00E+00	0.00E+00	0.00E+00	0.00E+00	0.00E+00	0.00E+00	0.00E+00	0.00E+00	0.00E+00	0.00E+00	0.00E+00
Ru106	0.00E+00	0.00E+00	0.00E+00	0.00E+00	0.00E+00	0.00E+00	0.00E+00	0.00E+00	0.00E+00	0.00E+00	0.00E+00
Rh105	0.00E+00	0.00E+00	0.00E+00	0.00E+00	0.00E+00	0.00E+00	0.00E+00	0.00E+00	0.00E+00	0.00E+00	0.00E+00
Y90	0.00E+00	0.00E+00	0.00E+00	0.00E+00	0.00E+00	0.00E+00	0.00E+00	0.00E+00	0.00E+00	0.00E+00	0.00E+00
Y91	0.00E+00	0.00E+00	0.00E+00	0.00E+00	0.00E+00	0.00E+00	0.00E+00	0.00E+00	0.00E+00	0.00E+00	0.00E+00
Y92	0.00E+00	0.00E+00	0.00E+00	0.00E+00	0.00E+00	0.00E+00	0.00E+00	0.00E+00	0.00E+00	0.00E+00	0.00E+00
Y93	0.00E+00	0.00E+00	0.00E+00	0.00E+00	0.00E+00	0.00E+00	0.00E+00	0.00E+00	0.00E+00	0.00E+00	0.00E+00
Zr95	0.00E+00	0.00E+00	0.00E+00	0.00E+00	0.00E+00	0.00E+00	0.00E+00	0.00E+00	0.00E+00	0.00E+00	0.00E+00
Zr97	0.00E+00	0.00E+00	0.00E+00	0.00E+00	0.00E+00	0.00E+00	0.00E+00	0.00E+00	0.00E+00	0.00E+00	0.00E+00
Nb95	0.00E+00	0.00E+00	0.00E+00	0.00E+00	0.00E+00	0.00E+00	0.00E+00	0.00E+00	0.00E+00	0.00E+00	0.00E+00
La140	0.00E+00	0.00E+00	0.00E+00	0.00E+00	0.00E+00	0.00E+00	0.00E+00	0.00E+00	0.00E+00	0.00E+00	0.00E+00
La141	0.00E+00	0.00E+00	0.00E+00	0.00E+00	0.00E+00	0.00E+00	0.00E+00	0.00E+00	0.00E+00	0.00E+00	0.00E+00
La142	0.00E+00	0.00E+00	0.00E+00	0.00E+00	0.00E+00	0.00E+00	0.00E+00	0.00E+00	0.00E+00	0.00E+00	0.00E+00
Pr143	0.00E+00	0.00E+00	0.00E+00	0.00E+00	0.00E+00	0.00E+00	0.00E+00	0.00E+00	0.00E+00	0.00E+00	0.00E+00
Nd147	0.00E+00	0.00E+00	0.00E+00	0.00E+00	0.00E+00	0.00E+00	0.00E+00	0.00E+00	0.00E+00	0.00E+00	0.00E+00
Am241	0.00E+00	0.00E+00	0.00E+00	0.00E+00	0.00E+00	0.00E+00	0.00E+00	0.00E+00	0.00E+00	0.00E+00	0.00E+00
Cm242	0.00E+00	0.00E+00	0.00E+00	0.00E+00	0.00E+00	0.00E+00	0.00E+00	0.00E+00	0.00E+00	0.00E+00	0.00E+00
Cm244	0.00E+00	0.00E+00	0.00E+00	0.00E+00	0.00E+00	0.00E+00	0.00E+00	0.00E+00	0.00E+00	0.00E+00	0.00E+00
Ce141	0.00E+00	0.00E+00	0.00E+00	0.00E+00	0.00E+00	0.00E+00	0.00E+00	0.00E+00	0.00E+00	0.00E+00	0.00E+00
Ce143	0.00E+00	0.00E+00	0.00E+00	0.00E+00	0.00E+00	0.00E+00	0.00E+00	0.00E+00	0.00E+00	0.00E+00	0.00E+00
Ce144	0.00E+00	0.00E+00	0.00E+00	0.00E+00	0.00E+00	0.00E+00	0.00E+00	0.00E+00	0.00E+00	0.00E+00	0.00E+00
Np239	0.00E+00	0.00E+00	0.00E+00	0.00E+00	0.00E+00	0.00E+00	0.00E+00	0.00E+00	0.00E+00	0.00E+00	0.00E+00
Pu238	0.00E+00	0.00E+00	0.00E+00	0.00E+00	0.00E+00	0.00E+00	0.00E+00	0.00E+00	0.00E+00	0.00E+00	0.00E+00
Pu239	0.00E+00	0.00E+00	0.00E+00	0.00E+00	0.00E+00	0.00E+00	0.00E+00	0.00E+00	0.00E+00	0.00E+00	0.00E+00
Pu240	0.00E+00	0.00E+00	0.00E+00	0.00E+00	0.00E+00	0.00E+00	0.00E+00	0.00E+00	0.00E+00	0.00E+00	0.00E+00
Pu241	0.00E+00	0.00E+00	0.00E+00	0.00E+00	0.00E+00	0.00E+00	0.00E+00	0.00E+00	0.00E+00	0.00E+00	0.00E+00
Sr89	0.00E+00	0.00E+00	0.00E+00	0.00E+00	0.00E+00	0.00E+00	0.00E+00	0.00E+00	0.00E+00	0.00E+00	0.00E+00
Sr90	0.00E+00	0.00E+00	0.00E+00	0.00E+00	0.00E+00	0.00E+00	0.00E+00	0.00E+00	0.00E+00	0.00E+00	0.00E+00
Sr91	0.00E+00	0.00E+00	0.00E+00	0.00E+00	0.00E+00	0.00E+00	0.00E+00	0.00E+00	0.00E+00	0.00E+00	0.00E+00
Sr92	0.00E+00	0.00E+00	0.00E+00	0.00E+00	0.00E+00	0.00E+00	0.00E+00	0.00E+00	0.00E+00	0.00E+00	0.00E+00
Hours >	**2.917**	**3.167**	**3.667**	**4.167**	**6.00E+00**	**8.03E+00**	**2.40E+01**	**4.80E+01**	**9.60E+01**	**2.40E+02**	**7.20E+02**
Kr83m	0.00E+00	0.00E+00	0.00E+00	0.00E+00	0.00E+00	4.28E+01	2.02E+02	2.03E+02	2.03E+02	2.03E+02	2.03E+02
Kr85m	0.00E+00	0.00E+00	0.00E+00	0.00E+00	0.00E+00	4.54E+02	6.41E+03	7.26E+03	7.28E+03	7.28E+03	7.28E+03
Kr85	0.00E+00	0.00E+00	0.00E+00	0.00E+00	0.00E+00	8.12E+01	4.19E+03	1.10E+04	2.19E+04	5.28E+04	1.43E+05
Kr87	0.00E+00	0.00E+00	0.00E+00	0.00E+00	0.00E+00	5.14E+01	1.53E+02	1.53E+02	1.53E+02	1.53E+02	1.53E+02
Kr88	0.00E+00	0.00E+00	0.00E+00	0.00E+00	0.00E+00	6.34E+02	5.28E+03	5.46E+03	5.46E+03	5.46E+03	5.46E+03
Kr89	0.00E+00	0.00E+00	0.00E+00	0.00E+00	0.00E+00	1.23E-33	1.23E-33	1.23E-33	1.23E-33	1.23E-33	1.23E-33
Xe131m	0.00E+00	0.00E+00	0.00E+00	0.00E+00	0.00E+00	6.17E+01	3.11E+03	7.94E+03	1.50E+04	3.11E+04	5.47E+04

Project: Nine Mile Point Nuclear Station Unit: __1__ Disposition: ____

Originator/Date	Reviewer/Date	Calculation No.	Revision
J. Metcalf 12/12/06	D. Leaver 12/12/06	H21C092	00

Ref.

Xe133m	0.00E+00	0.00E+00	0.00E+00	0.00E+00	0.00E+00	3.06E+02	1.38E+04	3.17E+04	4.95E+04	6.58E+04	6.84E+04
Xe133	5.15E+02	6.56E+02	9.91E+02	1.39E+03	3.51E+03	1.43E+04	5.47E+05	1.42E+06	2.71E+06	4.98E+06	6.49E+06
Xe135m	0.00E+00	0.00E+00	0.00E+00	0.00E+00	0.00E+00	1.20E-05	1.23E-05	1.23E-05	1.23E-05	1.23E-05	1.23E-05
Xe135	5.70E+03	7.18E+03	1.06E+04	1.45E+04	3.36E+04	3.86E+04	2.15E+05	3.66E+05	4.06E+05	4.07E+05	4.07E+05
Xe137	0.00E+00	0.00E+00	0.00E+00	0.00E+00	0.00E+00	7.64E-27	7.64E-27	7.64E-27	7.64E-27	7.64E-27	7.64E-27
Xe138	0.00E+00	0.00E+00	0.00E+00	0.00E+00	0.00E+00	3.10E-04	3.22E-04	3.22E-04	3.22E-04	3.22E-04	3.22E-04
I131Org	1.48E+01	1.70E+01	2.14E+01	2.58E+01	4.23E+01	4.41E+01	1.32E+02	3.21E+02	6.51E+02	1.25E+03	1.72E+03
I132Org	1.19E+01	1.32E+01	1.55E+01	1.75E+01	2.28E+01	2.31E+01	2.47E+01	2.48E+01	2.48E+01	2.48E+01	2.48E+01
I133Org	2.84E+01	3.24E+01	4.05E+01	4.84E+01	7.74E+01	8.03E+01	1.88E+02	3.23E+02	4.11E+02	4.31E+02	4.31E+02
I134Org	7.51E+00	7.96E+00	8.62E+00	9.07E+00	9.80E+00	9.81E+00	9.82E+00	9.82E+00	9.82E+00	9.82E+00	9.82E+00
I135Org	2.30E+01	2.61E+01	3.20E+01	3.76E+01	5.65E+01	5.82E+01	8.99E+01	1.02E+02	1.03E+02	1.03E+02	1.03E+02
I131Elem	2.39E+02	2.75E+02	3.46E+02	4.17E+02	6.84E+02	7.10E+02	1.94E+03	4.69E+03	9.60E+03	1.85E+04	2.51E+04
I132Elem	1.93E+02	2.14E+02	2.51E+02	2.83E+02	3.69E+02	3.73E+02	3.96E+02	3.97E+02	3.97E+02	3.98E+02	3.98E+02
I133Elem	4.58E+02	5.25E+02	6.55E+02	7.83E+02	1.25E+03	1.29E+03	2.79E+03	4.75E+03	6.06E+03	6.36E+03	6.36E+03
I134Elem	1.21E+02	1.29E+02	1.39E+02	1.47E+02	1.58E+02	1.59E+02	1.59E+02	1.59E+02	1.59E+02	1.59E+02	1.59E+02
I135Elem	3.72E+02	4.22E+02	5.18E+02	6.09E+02	9.14E+02	9.37E+02	1.38E+03	1.55E+03	1.57E+03	1.57E+03	1.57E+03
I131Part	0.00E+00	0.00E+00	0.00E+00	0.00E+00	0.00E+00	1.35E-03	9.62E-03	1.18E-02	1.20E-02	1.20E-02	1.20E-02
I132Part	0.00E+00	0.00E+00	0.00E+00	0.00E+00	0.00E+00	2.30E-04	5.62E-04	5.63E-04	5.63E-04	5.63E-04	5.63E-04
I133Part	0.00E+00	0.00E+00	0.00E+00	0.00E+00	0.00E+00	2.21E-03	1.33E-02	1.51E-02	1.52E-02	1.52E-02	1.52E-02
I134Part	0.00E+00	0.00E+00	0.00E+00	0.00E+00	0.00E+00	1.10E-05	1.53E-05	1.53E-05	1.53E-05	1.53E-05	1.53E-05
I135Part	0.00E+00	0.00E+00	0.00E+00	0.00E+00	0.00E+00	1.24E-03	5.36E-03	5.55E-03	5.55E-03	5.55E-03	5.55E-03
Rb86	0.00E+00	0.00E+00	0.00E+00	0.00E+00	0.00E+00	3.09E-06	2.23E-05	2.74E-05	2.81E-05	2.81E-05	2.81E-05
Cs134	0.00E+00	0.00E+00	0.00E+00	0.00E+00	0.00E+00	3.12E-04	2.27E-03	2.81E-03	2.88E-03	2.89E-03	2.89E-03
Cs136	0.00E+00	0.00E+00	0.00E+00	0.00E+00	0.00E+00	9.62E-05	6.91E-04	8.49E-04	8.68E-04	8.69E-04	8.69E-04
Cs137	0.00E+00	0.00E+00	0.00E+00	0.00E+00	0.00E+00	1.86E-04	1.36E-03	1.68E-03	1.72E-03	1.72E-03	1.73E-03
Sb127	0.00E+00	0.00E+00	0.00E+00	0.00E+00	0.00E+00	3.03E-05	2.11E-04	2.55E-04	2.59E-04	2.60E-04	2.60E-04
Sb129	0.00E+00	0.00E+00	0.00E+00	0.00E+00	0.00E+00	2.98E-05	1.05E-04	1.06E-04	1.06E-04	1.06E-04	1.06E-04
Te127m	0.00E+00	0.00E+00	0.00E+00	0.00E+00	0.00E+00	4.30E-06	3.12E-05	3.86E-05	3.96E-05	3.96E-05	3.97E-05
Te127	0.00E+00	0.00E+00	0.00E+00	0.00E+00	0.00E+00	2.86E-05	2.10E-04	2.57E-04	2.62E-04	2.62E-04	2.62E-04
Te129m	0.00E+00	0.00E+00	0.00E+00	0.00E+00	0.00E+00	1.37E-05	9.95E-05	1.23E-04	1.26E-04	1.26E-04	1.26E-04
Te129	0.00E+00	0.00E+00	0.00E+00	0.00E+00	0.00E+00	3.78E-05	1.39E-04	1.41E-04	1.41E-04	1.41E-04	1.41E-04
Te131m	0.00E+00	0.00E+00	0.00E+00	0.00E+00	0.00E+00	3.57E-05	2.28E-04	2.63E-04	2.65E-04	2.65E-04	2.65E-04
Te132	0.00E+00	0.00E+00	0.00E+00	0.00E+00	0.00E+00	3.84E-04	2.65E-03	3.19E-03	3.24E-03	3.24E-03	3.24E-03
Ba137m	0.00E+00	0.00E+00	0.00E+00	0.00E+00	0.00E+00	1.86E-04	1.36E-03	1.68E-03	1.72E-03	1.72E-03	1.73E-03
Ba139	0.00E+00	0.00E+00	0.00E+00	0.00E+00	0.00E+00	5.69E-06	1.01E-05	1.01E-05	1.01E-05	1.01E-05	1.01E-05
Ba140	0.00E+00	0.00E+00	0.00E+00	0.00E+00	0.00E+00	1.99E-04	1.43E-03	1.75E-03	1.79E-03	1.79E-03	1.79E-03
Mo99	0.00E+00	0.00E+00	0.00E+00	0.00E+00	0.00E+00	2.56E-05	1.75E-04	2.09E-04	2.13E-04	2.13E-04	2.13E-04
Tc99m	0.00E+00	0.00E+00	0.00E+00	0.00E+00	0.00E+00	2.24E-05	1.69E-04	2.06E-04	2.09E-04	2.09E-04	2.10E-04
Ru103	0.00E+00	0.00E+00	0.00E+00	0.00E+00	0.00E+00	2.30E-05	1.66E-04	2.06E-04	2.10E-04	2.11E-04	2.11E-04
Ru105	0.00E+00	0.00E+00	0.00E+00	0.00E+00	0.00E+00	5.26E-06	1.88E-05	1.91E-05	1.91E-05	1.91E-05	1.91E-05
Ru106	0.00E+00	0.00E+00	0.00E+00	0.00E+00	0.00E+00	9.47E-06	6.89E-05	8.53E-05	8.74E-05	8.74E-05	8.76E-05
Rh105	0.00E+00	0.00E+00	0.00E+00	0.00E+00	0.00E+00	1.40E-05	9.35E-05	1.09E-04	1.11E-04	1.11E-04	1.11E-04
Y90	0.00E+00	0.00E+00	0.00E+00	0.00E+00	0.00E+00	8.68E-07	1.20E-05	1.86E-05	2.00E-05	2.01E-05	2.04E-05

Project: Nine Mile Point Nuclear Station Unit: __1__ Disposition: ____

Originator/Date	Reviewer/Date	Calculation No.	Revision
J. Metcalf 12/12/06	D. Leaver 12/12/06	H21C092	00

Ref.

Y91	0.00E+00	0.00E+00	0.00E+00	0.00E+00	0.00E+00	1.57E-06	1.27E-05	1.61E-05	1.65E-05	1.66E-05	1.66E-05
Y92	0.00E+00	0.00E+00	0.00E+00	0.00E+00	0.00E+00	2.78E-05	1.22E-04	1.24E-04	1.24E-04	1.24E-04	1.24E-04
Y93	0.00E+00	0.00E+00	0.00E+00	0.00E+00	0.00E+00	1.01E-06	5.10E-06	5.45E-06	5.46E-06	5.46E-06	5.46E-06
Zr95	0.00E+00	0.00E+00	0.00E+00	0.00E+00	0.00E+00	1.86E-06	1.35E-05	1.67E-05	1.71E-05	1.71E-05	1.72E-05
Zr97	0.00E+00	0.00E+00	0.00E+00	0.00E+00	0.00E+00	1.40E-06	8.13E-06	9.04E-06	9.08E-06	9.08E-06	9.08E-06
Nb95	0.00E+00	0.00E+00	0.00E+00	0.00E+00	0.00E+00	1.87E-06	1.36E-05	1.69E-05	1.73E-05	1.73E-05	1.74E-05
La140	0.00E+00	0.00E+00	0.00E+00	0.00E+00	0.00E+00	1.91E-05	2.63E-04	3.99E-04	4.24E-04	4.26E-04	4.28E-04
La141	0.00E+00	0.00E+00	0.00E+00	0.00E+00	0.00E+00	5.23E-07	1.75E-06	1.77E-06	1.77E-06	1.77E-06	1.77E-06
La142	0.00E+00	0.00E+00	0.00E+00	0.00E+00	0.00E+00	7.15E-08	1.37E-07	1.37E-07	1.37E-07	1.37E-07	1.37E-07
Pr143	0.00E+00	0.00E+00	0.00E+00	0.00E+00	0.00E+00	1.68E-06	1.24E-05	1.54E-05	1.58E-05	1.58E-05	1.58E-05
Nd147	0.00E+00	0.00E+00	0.00E+00	0.00E+00	0.00E+00	7.40E-07	5.30E-06	6.50E-06	6.65E-06	6.65E-06	6.66E-06
Am241	0.00E+00	0.00E+00	0.00E+00	0.00E+00	0.00E+00	3.13E-10	2.28E-09	2.82E-09	2.89E-09	2.90E-09	2.90E-09
Cm242	0.00E+00	0.00E+00	0.00E+00	0.00E+00	0.00E+00	7.74E-08	5.63E-07	6.96E-07	7.13E-07	7.14E-07	7.16E-07
Cm244	0.00E+00	0.00E+00	0.00E+00	0.00E+00	0.00E+00	5.15E-09	3.75E-08	4.64E-08	4.76E-08	4.76E-08	4.77E-08
Ce141	0.00E+00	0.00E+00	0.00E+00	0.00E+00	0.00E+00	4.73E-06	3.42E-05	4.23E-05	4.33E-05	4.33E-05	4.34E-05
Ce143	0.00E+00	0.00E+00	0.00E+00	0.00E+00	0.00E+00	3.76E-06	2.42E-05	2.81E-05	2.84E-05	2.84E-05	2.84E-05
Ce144	0.00E+00	0.00E+00	0.00E+00	0.00E+00	0.00E+00	3.93E-06	2.86E-05	3.54E-05	3.63E-05	3.63E-05	3.64E-05
Np239	0.00E+00	0.00E+00	0.00E+00	0.00E+00	0.00E+00	5.62E-05	3.81E-04	4.53E-04	4.60E-04	4.60E-04	4.60E-04
Pu238	0.00E+00	0.00E+00	0.00E+00	0.00E+00	0.00E+00	1.54E-08	1.12E-07	1.39E-07	1.42E-07	1.43E-07	1.43E-07
Pu239	0.00E+00	0.00E+00	0.00E+00	0.00E+00	0.00E+00	1.42E-09	1.04E-08	1.28E-08	1.32E-08	1.32E-08	1.32E-08
Pu240	0.00E+00	0.00E+00	0.00E+00	0.00E+00	0.00E+00	2.01E-09	1.46E-08	1.81E-08	1.86E-08	1.86E-08	1.86E-08
Pu241	0.00E+00	0.00E+00	0.00E+00	0.00E+00	0.00E+00	5.84E-07	4.25E-06	5.26E-06	5.39E-06	5.40E-06	5.41E-06
Sr89	0.00E+00	0.00E+00	0.00E+00	0.00E+00	0.00E+00	1.05E-04	7.59E-04	9.37E-04	9.60E-04	9.61E-04	9.63E-04
Sr90	0.00E+00	0.00E+00	0.00E+00	0.00E+00	0.00E+00	1.35E-05	9.80E-05	1.21E-04	1.24E-04	1.24E-04	1.25E-04
Sr91	0.00E+00	0.00E+00	0.00E+00	0.00E+00	0.00E+00	7.84E-05	3.88E-04	4.13E-04	4.13E-04	4.13E-04	4.13E-04
Sr92	0.00E+00	0.00E+00	0.00E+00	0.00E+00	0.00E+00	2.31E-05	6.23E-05	6.25E-05	6.25E-05	6.25E-05	6.25E-05

Ref.

The steps taken to convert these cumulative releases to the environment to integrated MeV/cc values by photon energy group for each plume segment (distinguished by a specific X/Q) are as follows:

1. The photon energy data is the same as that used in Appendix F; i.e.:

Energy Group	E1	E2	E3	E4	E5	E6
Energy	(0 to 0.3)	(0.3 to 0.5)	(0.5 to 1)	(1 to 1.5)	(1.5 to 2)	(2+)
Kr83m	2.57E-03	0.00E+00	0.00E+00	0.00E+00	0.00E+00	0.00E+00
Kr85m	1.15E-01	4.27E-02	1.20E-04	0.00E+00	0.00E+00	0.00E+00
Kr85	0.00E+00	0.00E+00	2.23E-03	0.00E+00	0.00E+00	0.00E+00
Kr87	2.00E-05	1.99E-01	8.33E-02	2.76E-02	5.79E-02	4.25E-01
Kr88	5.87E-02	1.55E-02	2.66E-01	1.28E-01	6.20E-01	1.50E+00
Kr89	5.03E-02	8.84E-02	3.77E-01	2.84E-01	3.35E-01	7.00E-01
Xe131m	2.01E-02	0.00E+00	0.00E+00	0.00E+00	0.00E+00	0.00E+00
Xe133m	4.15E-02	0.00E+00	0.00E+00	0.00E+00	0.00E+00	0.00E+00
Xe133	4.53E-02	0.00E+00	0.00E+00	0.00E+00	0.00E+00	0.00E+00
Xe135m	4.18E-03	0.00E+00	4.27E-01	0.00E+00	0.00E+00	0.00E+00
Xe135	2.27E-01	2.25E-03	1.90E-02	0.00E+00	0.00E+00	0.00E+00
Xe137	4.50E-04	1.40E-01	7.23E-03	2.36E-02	1.09E-02	5.16E-03
Xe138	1.02E-01	1.24E-01	3.18E-02	6.16E-02	3.44E-01	4.62E-01
I131Org	2.12E-02	2.97E-01	6.25E-02	0.00E+00	0.00E+00	0.00E+00
I132Org	7.10E-03	1.37E-02	1.89E+00	3.14E-01	2.80E-02	3.76E-02
I133Org	1.41E-03	2.71E-03	5.45E-01	5.80E-02	0.00E+00	0.00E+00
I134Org	1.40E-02	6.84E-02	1.86E+00	3.91E-01	2.72E-01	1.73E-02
I135Org	1.47E-02	2.27E-02	1.30E-01	9.33E-01	4.20E-01	5.46E-02
I131Elem	2.12E-02	2.97E-01	6.25E-02	0.00E+00	0.00E+00	0.00E+00
I132Elem	7.10E-03	1.37E-02	1.89E+00	3.14E-01	2.80E-02	3.76E-02
I133Elem	1.41E-03	2.71E-03	5.45E-01	5.80E-02	0.00E+00	0.00E+00
I134Elem	1.40E-02	6.84E-02	1.86E+00	3.91E-01	2.72E-01	1.73E-02
I135Elem	1.47E-02	2.27E-02	1.30E-01	9.33E-01	4.20E-01	5.46E-02
I131Part	2.12E-02	2.97E-01	6.25E-02	0.00E+00	0.00E+00	0.00E+00
I132Part	7.10E-03	1.37E-02	1.89E+00	3.14E-01	2.80E-02	3.76E-02
I133Part	1.41E-03	2.71E-03	5.45E-01	5.80E-02	0.00E+00	0.00E+00
I134Part	1.40E-02	6.84E-02	1.86E+00	3.91E-01	2.72E-01	1.73E-02
I135Part	1.47E-02	2.27E-02	1.30E-01	9.33E-01	4.20E-01	5.46E-02
Rb86	0.00E+00	0.00E+00	0.00E+00	9.45E-02	0.00E+00	0.00E+00
Cs134	3.50E-04	6.94E-03	1.47E+00	7.29E-02	0.00E+00	0.00E+00
Cs136	9.98E-02	1.67E-01	8.24E-01	1.08E+00	0.00E+00	0.00E+00
Cs137	2.31E-03	0.00E+00	5.63E-01	0.00E+00	0.00E+00	0.00E+00
Sb127	3.09E-02	1.58E-01	4.64E-01	8.54E-03	0.00E+00	0.00E+00
Sb129	1.10E-02	2.69E-02	9.50E-01	2.45E-01	1.76E-01	2.00E-02
Te127m	1.12E-02	0.00E+00	7.00E-05	0.00E+00	0.00E+00	0.00E+00
Te127	2.20E-04	4.61E-03	0.00E+00	0.00E+00	0.00E+00	0.00E+00
Te129m	8.10E-03	0.00E+00	3.13E-02	0.00E+00	0.00E+00	0.00E+00
Te129	7.87E-03	3.90E-02	3.90E-03	6.88E-03	0.00E+00	0.00E+00
Te131m	7.55E-02	6.37E-02	8.58E-01	3.26E-01	4.60E-02	5.66E-02
Te132	2.31E-01	0.00E+00	0.00E+00	0.00E+00	0.00E+00	0.00E+00
Ba137m						
Ba139	2.99E-02	0.00E+00	0.00E+00	5.32E-03	0.00E+00	0.00E+00
Ba140	1.70E-02	3.69E-02	1.37E-01	0.00E+00	0.00E+00	0.00E+00
Mo99	1.76E-02	5.02E-03	1.32E-01	0.00E+00	0.00E+00	0.00E+00

Ref.

(Continued)

Energy Group	E1	E2	E3	E4	E5	E6
Energy	(0 to 0.3)	(0.3 to 0.5)	(0.5 to 1)	(1 to 1.5)	(1.5 to 2)	(2+)
Tc99m	1.27E-01	0.00E+00	0.00E+00	0.00E+00	0.00E+00	0.00E+00
Ru103	1.12E-03	4.44E-01	3.88E-02	0.00E+00	0.00E+00	0.00E+00
Ru105	5.76E-02	1.79E-01	5.76E-01	6.50E-03	0.00E+00	0.00E+00
Ru106	0.00E+00	0.00E+00	1.74E-01	3.05E-02	2.45E-03	0.00E+00
Rh105	7.30E-04	7.69E-02	0.00E+00	0.00E+00	0.00E+00	0.00E+00
Y90	0.00E+00	0.00E+00	0.00E+00	0.00E+00	0.00E+00	0.00E+00
Y91	0.00E+00	0.00E+00	0.00E+00	3.61E-03	0.00E+00	0.00E+00
Y92	0.00E+00	1.29E-02	1.60E-01	7.00E-02	9.15E-03	0.00E+00
Y93	1.83E-02	0.00E+00	2.26E-02	1.41E-02	2.70E-02	7.14E-03
Zr95	0.00E+00	0.00E+00	7.35E-01	0.00E+00	0.00E+00	0.00E+00
Zr97	4.58E-03	1.05E-02	6.07E-02	7.47E-02	3.01E-02	0.00E+00
Nb95	2.00E-05	1.10E-04	7.64E-01	0.00E+00	0.00E+00	0.00E+00
La140	4.09E-03	3.02E-01	3.71E-01	5.03E-03	1.52E+00	1.10E-01
La141	0.00E+00	0.00E+00	0.00E+00	3.55E-02	7.20E-03	0.00E+00
La142	4.30E-04	3.72E-03	4.56E-01	2.23E-01	3.84E-01	1.65E+00
Pr143	0.00E+00	0.00E+00	0.00E+00	0.00E+00	0.00E+00	0.00E+00
Nd147	4.71E-02	1.64E-02	7.73E-02	0.00E+00	0.00E+00	0.00E+00
Am241	2.81E-02	0.00E+00	0.00E+00	0.00E+00	0.00E+00	0.00E+00
Cm242	1.67E-03	0.00E+00	0.00E+00	0.00E+00	0.00E+00	0.00E+00
Cm244	1.49E-03	0.00E+00	0.00E+00	0.00E+00	0.00E+00	0.00E+00
Ce141	7.69E-02	0.00E+00	0.00E+00	0.00E+00	0.00E+00	0.00E+00
Ce143	1.59E-01	2.35E-02	8.69E-02	4.03E-03	0.00E+00	0.00E+00
Ce144	1.93E-02	0.00E+00	0.00E+00	0.00E+00	0.00E+00	0.00E+00
Np239	1.60E-01	1.18E-02	0.00E+00	0.00E+00	0.00E+00	0.00E+00
Pu238	1.60E-03	0.00E+00	0.00E+00	0.00E+00	0.00E+00	0.00E+00
Pu239	6.50E-04	0.00E+00	0.00E+00	0.00E+00	0.00E+00	0.00E+00
Pu240	1.53E-03	0.00E+00	0.00E+00	0.00E+00	0.00E+00	0.00E+00
Pu241	0.00E+00	0.00E+00	0.00E+00	0.00E+00	0.00E+00	0.00E+00
Sr89	0.00E+00	0.00E+00	1.40E-04	0.00E+00	0.00E+00	0.00E+00
Sr90	0.00E+00	0.00E+00	0.00E+00	0.00E+00	0.00E+00	0.00E+00
Sr91	4.59E-03	5.40E-04	3.10E-01	3.64E-01	7.36E-03	0.00E+00
Sr92	7.17E-03	1.56E-02	3.79E-02	1.28E+00	0.00E+00	0.00E+00

2. The X/Qs used by time interval are as follows:

For Case 1Ax:

Up to (hours)	sec/m^3
0.667	5.85e-4
2.667	1.03e-3
8.033	5.85e-4
24	2.07e-4
96	1.75e-4
720	1.52e-4

Ref.

For Case 1Ay:

Up to (hours)	sec/m^3
0.667	2.61e-4
2.667	4.82e-4
6	2.61e-4

For Case 1Az:

Up to (hours)	sec/m^3
0.667	1.26E-4
2.667	2.27E-4
8.033	1.26E-4
24	4.30E-5
96	3.58E-5
720	2.59E-5

3. For each of the 12 X/Q values, the time-integrated, specific energy by photon energy group is calculated based on (1) the Ci released over a given time interval for each radionuclide, (2) the MeV/sec-Ci for each photon energy group for each radionuclide, and (3) the X/Q; i.e.,

$$\text{Ci x MeV/sec-Ci x sec/m}^3 = \text{MeV/m}^3$$

Occupancy factors are taken into account for time intervals beyond 24 hours.

4. These values are summed over all radionuclides for all of the time intervals associated with a specific X/Q and the result is converted into MeV/cc for each photon energy group.
5. The volume and radius of the hemispherical source is calculated based on the assumed semi-circular cross-section of the plume being equal to the dilution air volumetric flow (1/X/Q) divided by the assumed wind speed of 1.12 m/sec. The radius of the cross-section is:

$$r = \{2 \text{ x } [1/(X/Q)]/[\text{pi x } 1.12 \text{ m/sec}]\}^{1/2}$$

and the corresponding volume of the hemispherical source is:

$$V = 2/3 \text{ x pi x } r^3.$$

The results of the source strength development are as follows:

Radius - cm												
	2.35E+03	3.12E+03	3.44E+03	4.67E+03	5.01E+03	5.25E+03	5.70E+03	6.12E+03	6.72E+03	1.15E+04	1.26E+04	1.48E+04
Volume - cc												
	2.72E+10	6.36E+10	8.51E+10	2.13E+11	2.63E+11	3.02E+11	3.89E+11	4.80E+11	6.36E+11	3.19E+12	4.20E+12	6.83E+12
MeV/cc												
E1	9.43E+04	2.18E+05	2.33E+05	2.64E+05	8.59E+03	1.94E+05	1.05E+05	9.78E+04	3.97E+04	1.05E+05	1.14E+05	6.65E+04
E2	1.95E+04	1.54E+04	5.13E+04	2.49E+04	7.81E+02	2.99E+03	3.14E+02	2.32E+02	1.40E+03	1.83E+03	2.32E+03	1.89E+03
E3	5.95E+04	6.46E+04	1.88E+05	1.09E+05	7.76E+03	1.56E+04	1.33E+03	2.49E+02	9.19E+03	9.03E+03	4.90E+03	5.75E+02
E4	2.62E+04	2.63E+04	8.47E+04	4.55E+04	3.71E+03	3.87E+03	2.42E+01	7.93E-01	3.91E+03	1.81E+03	3.30E+02	7.23E+00
E5	9.72E+04	1.12E+05	2.45E+05	1.66E+05	1.50E+03	1.73E+04	5.30E+00	1.26E-02	3.23E+03	4.91E+03	1.56E+02	1.07E-02
E6	2.43E+05	2.78E+05	5.94E+05	4.05E+05	2.28E+02	4.18E+04	7.25E-01	1.69E-02	4.76E+03	1.12E+04	2.24E+02	1.44E-02

Ref.

The MeV/cc summed for all plumes is as follows (for information, the totals without noble gas and without noble gas or iodine are also presented):

E1	1.54E+06	3.22E+03[1]	1.06E+03[2]
E2	1.23E+05	1.68E+04[1]	4.58E+02[2]
E3	4.69E+05	1.31E+05[1]	7.54E+03[2]
E4	1.96E+05	6.40E+04[1]	2.72E+03[2]
E5	6.47E+05	2.52E+04[1]	1.73E+02[2]
E6	1.58E+06	3.78E+03[1]	4.43E+01[2]

(1) Without noble gas
(2) Without noble gas or iodine

This summation is provided to compare to the check values in the next appendix (based on Table J3).

E1	1.93E+06	+25.6%
E2	1.28E+05	+4.0%
E3	4.75E+05	+1.2%
E4	1.97E+05	+0.4%
E5	6.48E+05	+0.1%
E6	1.58E+06	+0.0%

While there is a 26% discrepancy in the first energy group (the check value being higher), this would be expected to have little consequence because of the limited contribution of the low energy photons for the shielded control room dose. All other energy groups are in excellent agreement.

QADMOD Dose Analysis

The QADMOD runs were done using a model similar to the reference plume shine hemispherical model presented in the Design Input Summary of the main body of the calculation. This model was based on a radius determined by five mean free paths of a photon in air rather than the actual amount of acitivty being released by the plume. However, because of the size of the hemisphere, the center of the hemisphere was placed at zero elevation. This did two things: (1) it placed a portion of the plume volume below the control room, and (2) it inadvertently included the control room as part of the source volume so shine was calculated from a portion of the source without shielding (as if the cloud were inside the control room as well as outside it). To avoid this difficulty, the zero datum was taken as the top of the control room. The 8" of concrete roof shield extends downward to -20.32 cm, and the dose point is at -17 feet (same as the reference model). A typical run (the one for the first hemispherical source, volume = 2.72E10 cc) is provided below:

```
----+----1----+----2----+----3----+----4----+----5----+----6----+----7----+----8
  Unit 1 LOCA  Control Room  Cloud Shine
    8    2    0    2    2    3    3   -2    2   15   10   10
                              0    1
  2.72+10
      0.0      2.00      3.00      6.00     10.00     16.00     26.00     43.00
```

Project: Nine Mile Point Nuclear Station Unit: __1__ Disposition: ____

Originator/Date	Reviewer/Date	Calculation No.	Revision
J. Metcalf 12/12/06	D. Leaver 12/12/06	H21C092	00

Ref.

```
    71.00   117.00   192.00   317.00   523.00   864.00  1425.00  2351.00
      0.0     0.157    0.314    0.417    0.628    0.785    0.942    1.100
    1.257    1.414    1.571
      0.0     0.157    0.314    0.417    0.628    0.785    0.942    1.100
    1.257    1.414    1.571
  1     3   -20.32
  2     3     0.00
  1     1  1                                       0.0      0.0   -600.00
  2     2  1  2                                    0.0      0.0    -10.00
  3     1  2                                       0.0      0.0   1000.00
  1.225-3
              2.35
   23   25
  1.37+5   7.26+4   3.20+4   1.17+5   0.00+0   2.93+5   0.00+0   0.00+0
  6.84-10  5.83-10  5.10-10  4.69-10  4.32-10  4.13-10  3.67-10  3.01-10
  MEV PER                    REM      CM**2
      0.0      0.0  -518.16    1                            DET. 1
                               -1
----+----1----+----2----+----3----+----4----+----5----+----6----+----7----+----8
```

```
                    TU ELECTRIC

                COMANCHE PEAK ENGINEERING

                    QADMOD-GP PROGRAM

        QADMOD-G CCC-396 (PC VERSION WITH OPTIONAL G-P BU FACTORS)

         Unit 1 LOCA  Control Room  Cloud Shine

        ***** PROGRAM CONTROL *****

        NUMBER OF PHOTON ENERGY GROUPS,MAX. 30          =   8
        NUMBER OF MATERIALS,MAX. 30                     =   2
        NO. OF MATERIALS TO BE READ FROM CARDS          =   0
        NUMBER OF COMPOSITIONS,MAX. 100                 =   2
        NUMBER OF BOUNDARIES,MAX. 250                   =   2
        NUMBER OF ZONES,MAX. 300                        =   3
        MOST PROBABLE SOURCE ZONE                       =   3
        SOURCE COMPUTATION OPTION                       =  -2
        SOURCE GEOMETRY TYPE OPTION                     =   2
        NUMBER OF SOURCE POINTS ALONG THE X AXIS,MAX. 30 =  15
        NUMBER OF SOURCE POINTS ALONG THE Z AXIS,MAX. 30 =  10
        NUMBER OF SOURCE POINTS ALONG THE Y AXIS,MAX. 30 =  10
        SUMMARY TABLE PUNCH OPTION, NO=0,YES=1          =   0
        DEBUG FLAG FOR PRINTOUT, USUAL PRINT=0, DEBUG=1 =   0
        FIRST SOURCE-DETECTOR TRAVERSE FOR GEOMETRY PRINT=  0
        LAST SOURCE-DETECTOR TRAVERSE FOR GEOMETRY PRINT =  0
        DEL SOURCE-DETECTOR TRAVERSE FOR GEOMETRY PRINT  =  0
        GAMMA RAY REFERENCE MATERIALS                   =   0
        CONVERSION OF GAMMA RAY OUTPUT OPTION           =   0
        GAMMA FTOD FACTORS,CARD INPUT=0,INTERNAL=NO.    =   0
        BUILDUP FACTORS, CARD INPUT=0, INT=1,4, G-P=5   =   1
        GAMMA HEAT CONVERSION FACTORS(NO=0,YES=1)       =   0
```

Ref.

```
     SOURCE  2.7200E+10  0.0000E+00  0.0000E+00  0.0000E+00  0.0000E+00  0.0000E+00
0.0000E+00

          R  0.0000E+00  2.0000E+00  3.0000E+00  6.0000E+00  1.0000E+01  1.6000E+01
2.6000E+01  4.3000E+01
             7.1000E+01  1.1700E+02  1.9200E+02  3.1700E+02  5.2300E+02  8.6400E+02
1.4250E+03  2.3510E+03

          Z  0.0000E+00  1.5700E-01  3.1400E-01  4.1700E-01  6.2800E-01  7.8500E-01  9.4200E-
01  1.1000E+00
             1.2570E+00  1.4140E+00  1.5710E+00

        PHI  0.0000E+00  1.5700E-01  3.1400E-01  4.1700E-01  6.2800E-01  7.8500E-01  9.4200E-
01  1.1000E+00
             1.2570E+00  1.4140E+00  1.5710E+00

       F(L)  1.0000E+00  1.0000E+00  1.0000E+00  1.0000E+00  1.0000E+00  1.0000E+00
1.0000E+00  1.0000E+00
             1.0000E+00  1.0000E+00  1.0000E+00  1.0000E+00  1.0000E+00  1.0000E+00
1.0000E+00  1.0000E+00

       F(M)  1.0000E+00  1.0000E+00  1.0000E+00  1.0000E+00  1.0000E+00  1.0000E+00
1.0000E+00  1.0000E+00
             1.0000E+00  1.0000E+00  1.0000E+00

       F(N)  1.0000E+00  1.0000E+00  1.0000E+00  1.0000E+00  1.0000E+00  1.0000E+00
1.0000E+00  1.0000E+00
             1.0000E+00  1.0000E+00  1.0000E+00
```

Ref.

```
****GEOMETRY DESCRIPTION***

    BOUNDARY DESCRIPTION

  BOUNDARY                                                    ADM(CM)
  NO IND TYPE
   1   0   3 -2.0320E+01  0.0000E+00  0.0000E+00  0.0000E+00  0.0000E+00  0.0000E+00
0.0000E+00
   2   0   3  0.0000E+00  0.0000E+00  0.0000E+00  0.0000E+00  0.0000E+00  0.0000E+00
0.0000E+00

    REGION DESCRIPTION

  REG MAT     BOUNDS BY REGION                                POINT IN REGION
  NO  NO                                                 X(CM)       Y(CM)       Z(CM)
   1   1   1   0   0   0   0   0   0   0   0        0.0000E+00  0.0000E+00 -6.0000E+02
   2   2   1   2   0   0   0   0   0   0   0        0.0000E+00  0.0000E+00 -1.0000E+01
   3   1   2   0   0   0   0   0   0   0   0        0.0000E+00  0.0000E+00  1.0000E+03
```

Ref.

```
****MATERIAL DENSITIES****

COMP/MAT        1            2
     1        1.2250E-03   0.0000E+00
     2        0.0000E+00   2.3500E+00


***MATERIAL REFERENCE NUMBERS***

                23           25


***MATERIAL ATTENUATION COEF.***

  GRP/MAT        1            2

                            GAMMA ATTENUATION COEFFICIENT
     1        9.5270E-02   9.5750E-02
     2        7.0680E-02   7.0890E-02
     3        5.6470E-02   5.6650E-02
     4        4.8830E-02   4.9080E-02
     5        4.2730E-02   4.3140E-02
     6        4.0130E-02   4.0660E-02
     7        3.3290E-02   3.4210E-02
     8        2.5000E-02   2.6770E-02
```

Ref.

GRP	SOURCE SPECTRA	CONVERSION FACTORS	B0	B1	B2	B3
1	1.3700E+05	6.8400E-10	9.9958E-01	1.1054E+00	2.6019E-01	4.1881E-03
2	7.2600E+04	5.8300E-10	9.9568E-01	9.1546E-01	1.5940E-01	-8.5060E-04
3	3.2000E+04	5.1000E-10	9.9334E-01	8.2479E-01	8.2983E-02	-1.2038E-03
4	1.1700E+05	4.6900E-10	9.9420E-01	7.7514E-01	5.2823E-02	-8.2951E-04
5	0.0000E+00	4.3200E-10	9.9616E-01	7.2817E-01	3.1157E-02	-5.0390E-04
6	2.9300E+05	4.1300E-10	9.9722E-01	7.0133E-01	2.4519E-02	-3.7916E-04
7	0.0000E+00	3.6700E-10	1.0012E+00	6.2686E-01	4.5545E-03	-2.4947E-05
8	0.0000E+00	3.0100E-10	1.0053E+00	4.8738E-01	-7.7360E-03	2.4680E-04

MEAN ENERGY FOR GROUP

4.0000E-01 8.0000E-01 1.3000E+00 1.7000E+00 2.2000E+00 2.5000E+00 3.5000E+00
6.1500E+00

NOTATIONS FOR OUTPUT UNITS :
UNIT G-
MEV PER REM

CM**2

Ref.

```
                                   COORDINATE TYPE 2          SOURCE INTENSITY OPTION 2

       COORDINATE   INTENSITY  COORDINATE   INTENSITY  COORDINATE   INTENSITY  COORDINATE
INTENSITY



   RHO COORDINATE
    1  1.0000E+00  3.2000E+01  2.5000E+00  7.6000E+01  4.5000E+00  7.5600E+02  8.0000E+00
3.1360E+03
    5  1.3000E+01  1.2384E+04  2.1000E+01  5.3920E+04  3.4500E+01  2.4772E+05  5.7000E+01
1.1136E+06
    9  9.4000E+01  4.9748E+06  1.5450E+02  2.1905E+07  2.5450E+02  9.9108E+07  4.2000E+02
4.4480E+08
   13  6.9350E+02  2.0077E+09  1.1445E+03  8.9947E+09  1.8880E+03  4.0403E+10

   PHI COORDINATE
    1  7.8500E-02  3.1400E-01  2.3550E-01  3.1400E-01  3.6550E-01  2.0600E-01  5.2250E-01
4.2200E-01
    5  7.0650E-01  3.1400E-01  8.6350E-01  3.1400E-01  1.0210E+00  3.1600E-01  1.1785E+00
3.1400E-01
    9  1.3355E+00  3.1400E-01  1.4925E+00  3.1400E-01

 THETA COORDINATE
    1  7.8500E-02  2.0480E-03  2.3550E-01  6.0937E-03  3.6550E-01  6.1274E-03  5.2250E-01
1.7502E-02
    5  7.0650E-01  1.6954E-02  8.6350E-01  1.9851E-02  1.0210E+00  2.2409E-02  1.1785E+00
2.4132E-02
    9  1.3355E+00  2.5397E-02  1.4925E+00  2.6036E-02
```

Ref.

Unit 1 LOCA Control Room Cloud Shine

RECEIVER NUMBER 1 DET. 1 COORDINATES - X 0.0000E+00 Y 0.0000E+00 Z -5.1816E+02

GRP NO	MEAN ENERGY MEV	MEAN BUILDUP FACTORS	ENERGY FLUX DIRECT BEAM MEV PER CM**2	ENERGY FLUX WITH BUILDUP MEV PER CM**2	DOSE RATE DIRECT BEAM REM	DOSE RATE WITH BUILDUP REM
1	.4000	1.5630E+01	2.0701E+05	3.2357E+06	1.4160E-04	2.2132E-03
2	.8000	7.5752E+00	4.6138E+05	3.4951E+06	2.6899E-04	2.0376E-03
3	1.3000	4.7504E+00	4.7407E+05	2.2520E+06	2.4177E-04	1.1485E-03
4	1.7000	3.7923E+00	2.7446E+06	1.0408E+07	1.2872E-03	4.8815E-03
5	2.2000	0.0000E+00	0.0000E+00	0.0000E+00	0.0000E+00	0.0000E+00
6	2.5000	2.9404E+00	1.1579E+07	3.4048E+07	4.7822E-03	1.4062E-02
7	3.5000	0.0000E+00	0.0000E+00	0.0000E+00	0.0000E+00	0.0000E+00
8	6.1500	0.0000E+00	0.0000E+00	0.0000E+00	0.0000E+00	0.0000E+00
TOTAL	1.5749		1.5466E+07	5.3439E+07	6.7218E-03	2.4343E-02
WOBU	2.0073					

ENERGY FLUX BUILDUP	DOSE BUILDUP
3.4552E+00	3.6214E+00

Ref.

```
      Unit 1 LOCA  Control Room  Cloud Shine

  RECEIVER   RECEIVER                RECEIVER                          DOSE RATE
   NUMBER      ID                   COORDINATES                          REM

                              X            Y            Z          DIRECT BEAM     WITH BUILDUP
     1       DET. 1       0.0000E+00   0.0000E+00  -5.1816E+02      6.7218E-03      2.4343E-02

  *** END OF JOB ***
Stop - Program terminated.
```

The dose for this case is 0.024 rem. The dose for all twelve runs is as follows:

Volume - cc												
2.72E+10	6.36E+10	8.51E+10	2.13E+11	2.63E+11	3.02E+11	3.89E+11	4.80E+11	6.36E+11	3.19E+12	4.20E+12	6.83E+12	Total
Dose – rem												
0.024	0.039	0.077	0.072	0.001	0.015	0.004	0.004	0.004	0.011	0.008	0.005	0.264

Results

The total dose is 0.26 rem from plume shine. The manual check presented in Appendix K produces a result of 0.33 rem, 27% greater. This is considered good agreement given the manual nature of the check calculation. Even if 0.33 rem were correct, the five rem dose limit for the control room would not be exceeded (i.e., there is more than 0.07 rem margin).

References

I1 "QADMOD-GP: Point Kernel Gamma-Ray Shielding Code With Geometric Progression Buildup Factors", RSIC Code Package CCC-565.

Ref.

Appendix J Plume Integrated MeV/cc (15 Pages)

Check of Plume Integrated Airborne Specific Activities from Appendix I (Integrated 0-30d post using LOCA source term to determine Plume shine dose)

This appendix discusses the determination of the source strength (MeV/cc) by manipulating the STARDOSE output using a spreadsheet methodology.

Background/Methodology

A spreadsheet methodology was used to determine airborne activity concentration in the environment from output generated by the STARDOSE computer code [Ref J-1]. STARDOSE provides the curies resulting from each of the 76 radionuclides analyzed in the environment as a function of edit time. To acknowledge the varying X/Q values by release path, three separate STARDOSE cases are executed, with only the corresponding exhaust released to the environment. All other release pathways are funneled to a dummy volume. This approach allows curies to be segregated by X/Q set. The following runs were executed for Case 1A (Core Spray, Division Electrical Failure):

- Case 1Ax: MSIV leakage and Permanent Bypass which use the TB X/Q set *(RADTRAD Case 1Aa)*
- Case 1Ay: Temporary Bypass which uses the RB X/Q set *(RADTRAD Case 1Ab + Case 1Ad)*
- Case 1Az: Stack bypass which uses the Stack X/Q set *(RADTRAD Case 1Ac + Case 1Ae)*

The worst two hour period, (and thus the application of the 2 hour X/Q value) was taken from case 1A' of Appendix E to start forty minutes after the accident (0.667 and 2.667 hours). Determining the ΔCi at each time step allows one to integrate over each specific X/Q time period. Converting from curies to disintegrations per second, and multiplying by the appropriate X/Q value gives disintegrations/m^3. These results are multiplied by the nuclide specific MeV/dis values for each energy level. The sum of these results by nuclide provide the total MeV/m^3 in the environment. Converting m^3 to cm^3 gives results of MeV/cc for each of six energy levels analyzed.

Calculation

An Excel spreadsheet was used to carry out the calculation. The spreadsheet was created to accommodate the STARDOSE edit times of every fifteen minutes from 0.417 to 3.167 hours, 3.667, 4.167, 6, 8.033, 24, 48, 96, 240 and 720 hours after the accident. To correspond with their associated X/Q values ΔCi was calculated for the following time intervals, (0-.667 hrs), (0.667-2.667 hrs), (2.667-8.033 hrs), (8.033-24 hrs), (24-96 hrs) and (96-720 hrs). The worst two hours of release are considered to be from 0.667 to 2.667 hours, which was determined in Case 1A' of Appendix E. These values can be seen in Tables J1.1, J1.2 and J1.3 for Cases 1Ax, 1Ay and 1Az respectively.

Project: Nine Mile Point Nuclear Station Unit: __1_ Disposition: ____

Originator/Date	Reviewer/Date	Calculation No.	Revision
H. Pustulka 12/12/06	N/A	H21C092	00

Ref.

Tables J 1.1, J 1.2 & J 1.3: ΔCi by X/Q interval

Table J 1.1: Case 1Ax

Δ t (hrs)	0-0.667	0.667-2.667	2.667-8	8-24	24-96	96-720
Kr83m	1.35E+01	5.20E+02	7.47E+02	1.50E+02	0.00E+00	0.00E+00
Kr85m	3.15E+01	1.63E+03	4.68E+03	4.06E+03	2.00E+02	0.00E+00
Kr85	1.96E+00	1.25E+02	6.16E+02	2.23E+03	5.00E+03	3.76E+04
Kr87	4.97E+01	1.54E+03	1.42E+03	1.00E+02	0.00E+00	0.00E+00
Kr88	8.09E+01	3.71E+03	8.01E+03	3.60E+03	0.00E+00	0.00E+00
Kr89	1.59E+00	1.00E-02	0.00E+00	0.00E+00	0.00E+00	0.00E+00
Xe131m	1.51E+00	9.63E+01	4.70E+02	1.66E+03	3.35E+03	1.23E+04
Xe133m	8.06E+00	5.06E+02	2.38E+03	7.51E+03	9.80E+03	5.80E+03
Xe133	2.62E+02	1.66E+04	8.05E+04	2.78E+05	5.07E+05	9.48E+05
Xe135m	1.56E+01	5.16E+01	7.00E-01	0.00E+00	0.00E+00	0.00E+00
Xe135	9.49E+01	5.53E+03	2.32E+04	5.19E+04	1.54E+04	1.00E+02
Xe137	5.65E+00	1.50E-01	0.00E+00	0.00E+00	0.00E+00	0.00E+00
Xe138	7.24E+01	3.02E+02	6.00E+00	0.00E+00	0.00E+00	0.00E+00
I131Org	1.71E-01	4.25E+00	1.91E+01	6.54E+01	1.26E+02	3.46E+02
I132Org	2.15E-01	3.60E+00	5.95E+00	1.84E+00	0.00E+00	0.00E+00
I133Org	3.42E-01	8.18E+00	3.29E+01	8.36E+01	5.40E+01	5.00E+00
I134Org	2.65E-01	2.40E+00	1.09E+00	2.00E-02	0.00E+00	0.00E+00
I135Org	3.10E-01	6.72E+00	2.11E+01	2.74E+01	3.20E+00	0.00E+00
I131Elem	4.58E-01	2.99E+00	2.62E+00	6.80E-01	0.00E+00	0.00E+00
I132Elem	5.93E-01	4.07E+00	8.54E+00	3.20E+00	2.00E-01	3.00E-01
I133Elem	9.21E-01	5.78E+00	4.60E+00	1.00E+00	0.00E+00	0.00E+00
I134Elem	7.48E-01	1.98E+00	2.40E-01	0.00E+00	0.00E+00	0.00E+00
I135Elem	8.38E-01	4.82E+00	3.13E+00	4.20E-01	0.00E+00	0.00E+00
I131Part	8.51E+00	5.71E+01	5.04E+01	1.30E+01	0.00E+00	0.00E+00
I132Part	1.09E+01	5.11E+01	1.98E+01	8.00E-01	0.00E+00	0.00E+00
I133Part	1.71E+01	1.11E+02	8.80E+01	1.90E+01	0.00E+00	0.00E+00
I134Part	1.39E+01	3.76E+01	4.70E+00	0.00E+00	0.00E+00	0.00E+00
I135Part	1.56E+01	9.24E+01	6.00E+01	8.00E+00	0.00E+00	0.00E+00
Rb86	2.32E-02	1.33E-01	1.17E-01	3.00E-02	1.00E-03	0.00E+00
Cs134	2.32E+00	1.33E+01	1.18E+01	3.10E+00	0.00E+00	0.00E+00
Cs136	7.25E-01	4.14E+00	3.66E+00	9.40E-01	1.00E-02	0.00E+00
Cs137	1.38E+00	7.92E+00	7.10E+00	1.80E+00	0.00E+00	0.00E+00
Sb127	3.64E-02	1.18E+00	1.02E+00	2.50E-01	0.00E+00	0.00E+00
Sb129	9.80E-02	2.73E+00	1.51E+00	1.40E-01	0.00E+00	0.00E+00
Te127m	4.92E-03	1.61E-01	1.42E-01	3.60E-02	1.00E-03	0.00E+00
Te127	3.49E-02	1.09E+00	9.60E-01	2.50E-01	0.00E+00	0.00E+00
Te129m	1.58E-02	5.17E-01	4.52E-01	1.15E-01	0.00E+00	0.00E+00
Te129	7.53E-02	1.79E+00	1.63E+00	1.90E-01	0.00E+00	0.00E+00
Te131m	4.75E-02	1.52E+00	1.25E+00	2.80E-01	0.00E+00	0.00E+00
Te132	4.65E-01	1.51E+01	1.29E+01	3.20E+00	0.00E+00	0.00E+00
Ba137m	6.87E-01	5.84E+00	7.07E+00	1.80E+00	0.00E+00	0.00E+00

Table J 1.1: Case 1Ax (cont.)

Δ t (hrs)	0- 0.667	0.667-2.667	2.667-8	8-24	24-96	96-720
Ba139	1.76E-01	3.51E+00	8.30E-01	1.00E-02	0.00E+00	0.00E+00
Ba140	2.30E-01	7.54E+00	6.53E+00	1.70E+00	0.00E+00	0.00E+00
Mo99	3.13E-02	1.02E+00	8.60E-01	2.10E-01	0.00E+00	0.00E+00
Tc99m	2.58E-02	7.87E-01	7.27E-01	2.10E-01	0.00E+00	0.00E+00
Ru103	2.63E-02	8.65E-01	7.59E-01	1.90E-01	0.00E+00	1.00E-02
Ru105	1.68E-02	4.70E-01	2.63E-01	2.60E-02	0.00E+00	0.00E+00
Ru106	1.08E-02	3.55E-01	3.11E-01	8.10E-02	1.00E-03	0.00E+00
Rh105	1.73E-02	5.58E-01	4.75E-01	1.20E-01	0.00E+00	0.00E+00
Y90	1.59E-04	6.87E-03	1.93E-02	1.27E-02	3.00E-04	0.00E+00
Y91	1.52E-03	5.07E-02	4.88E-02	1.50E-02	0.00E+00	0.00E+00
Y92	2.21E-03	2.63E-01	9.25E-01	1.90E-01	0.00E+00	0.00E+00
Y93	1.82E-03	5.55E-02	3.97E-02	7.00E-03	0.00E+00	0.00E+00
Zr95	2.13E-03	7.00E-02	6.09E-02	1.60E-02	0.00E+00	0.00E+00
Zr97	2.10E-03	6.62E-02	5.17E-02	1.00E-02	0.00E+00	0.00E+00
Nb95	2.14E-03	7.03E-02	6.16E-02	1.60E-02	0.00E+00	0.00E+00
La140	2.53E-03	1.22E-01	4.15E-01	2.80E-01	7.00E-03	0.00E+00
La141	1.91E-03	5.23E-02	2.78E-02	2.40E-03	0.00E+00	0.00E+00
La142	1.56E-03	3.27E-02	8.70E-03	2.00E-04	0.00E+00	0.00E+00
Pr143	1.90E-03	6.22E-02	5.49E-02	1.50E-02	0.00E+00	0.00E+00
Nd147	8.60E-04	2.81E-02	2.45E-02	6.30E-03	0.00E+00	0.00E+00
Am241	3.58E-07	1.17E-05	1.03E-05	2.70E-06	0.00E+00	0.00E+00
Cm242	8.85E-05	2.90E-03	2.55E-03	6.60E-04	1.00E-05	0.00E+00
Cm244	5.88E-06	1.93E-04	1.69E-04	4.50E-05	0.00E+00	0.00E+00
Ce141	5.42E-03	1.78E-01	1.56E-01	4.00E-02	1.00E-03	0.00E+00
Ce143	4.93E-03	1.58E-01	1.30E-01	3.00E-02	0.00E+00	0.00E+00
Ce144	4.49E-03	1.48E-01	1.29E-01	3.40E-02	0.00E+00	0.00E+00
Np239	6.97E-02	2.26E+00	1.90E+00	4.60E-01	1.00E-02	0.00E+00
Pu238	1.76E-05	5.78E-04	5.04E-04	1.30E-04	1.00E-05	0.00E+00
Pu239	1.63E-06	5.35E-05	4.69E-05	1.20E-05	0.00E+00	0.00E+00
Pu240	2.29E-06	7.54E-05	6.63E-05	1.70E-05	0.00E+00	0.00E+00
Pu241	6.67E-04	2.19E-02	1.91E-02	5.00E-03	1.00E-04	0.00E+00
Sr89	1.20E-01	3.93E+00	3.44E+00	9.00E-01	1.00E-02	0.00E+00
Sr90	1.54E-02	5.05E-01	4.42E-01	1.18E-01	0.00E+00	0.00E+00
Sr91	1.45E-01	4.42E+00	3.12E+00	5.10E-01	0.00E+00	0.00E+00
Sr92	1.41E-01	3.58E+00	1.54E+00	9.00E-02	0.00E+00	0.00E+00

Ref.

Table J 1.2: Case 1Ay

Δ t (hrs)	0- 0.667	0.667-2.667	2.667-8	8-24	24-96	96-720
Kr83m	7.99E+01	2.70E+03	2.66E+03	0.00E+00	0.00E+00	0.00E+00
Kr85m	1.86E+02	8.47E+03	1.38E+04	0.00E+00	0.00E+00	0.00E+00
Kr85	1.15E+01	6.53E+02	1.54E+03	0.00E+00	0.00E+00	0.00E+00
Kr87	2.94E+02	8.01E+03	5.50E+03	0.00E+00	0.00E+00	0.00E+00
Kr88	4.77E+02	1.93E+04	2.56E+04	0.00E+00	0.00E+00	0.00E+00
Kr89	9.98E+00	2.00E-02	0.00E+00	0.00E+00	0.00E+00	0.00E+00
Xe131m	8.91E+00	5.02E+02	1.18E+03	0.00E+00	0.00E+00	0.00E+00
Xe133m	4.75E+01	2.64E+03	6.03E+03	0.00E+00	0.00E+00	0.00E+00
Xe133	1.55E+03	8.68E+04	2.03E+05	0.00E+00	0.00E+00	0.00E+00
Xe135m	9.30E+01	2.75E+02	3.00E+00	0.00E+00	0.00E+00	0.00E+00
Xe135	6.03E+02	2.92E+04	6.36E+04	0.00E+00	0.00E+00	0.00E+00
Xe137	3.51E+01	9.00E-01	0.00E+00	0.00E+00	0.00E+00	0.00E+00
Xe138	4.31E+02	1.60E+03	3.00E+01	0.00E+00	0.00E+00	0.00E+00
I131Org	6.28E+00	3.23E+01	5.21E+01	0.00E+00	0.00E+00	0.00E+00
I132Org	7.98E+00	2.83E+01	2.22E+01	0.00E+00	0.00E+00	0.00E+00
I133Org	1.26E+01	6.25E+01	9.29E+01	0.00E+00	0.00E+00	0.00E+00
I134Org	9.96E+00	2.03E+01	5.30E+00	0.00E+00	0.00E+00	0.00E+00
I135Org	1.14E+01	5.18E+01	6.48E+01	0.00E+00	0.00E+00	0.00E+00
I131Elem	1.76E+02	3.83E+02	1.61E+02	0.00E+00	0.00E+00	0.00E+00
I132Elem	2.24E+02	3.63E+02	8.70E+01	1.00E+00	0.00E+00	1.00E+00
I133Elem	3.54E+02	7.46E+02	2.90E+02	0.00E+00	0.00E+00	0.00E+00
I134Elem	2.81E+02	2.87E+02	2.50E+01	0.00E+00	0.00E+00	0.00E+00
I135Elem	3.21E+02	6.27E+02	2.22E+02	0.00E+00	0.00E+00	0.00E+00
I131Part	9.49E+01	4.28E+02	2.50E+01	0.00E+00	0.00E+00	0.00E+00
I132Part	1.22E+02	3.96E+02	1.40E+01	0.00E+00	0.00E+00	0.00E+00
I133Part	1.91E+02	8.29E+02	5.00E+01	0.00E+00	0.00E+00	0.00E+00
I134Part	1.57E+02	3.04E+02	5.00E+00	0.00E+00	0.00E+00	0.00E+00
I135Part	1.74E+02	6.98E+02	3.40E+01	0.00E+00	0.00E+00	0.00E+00
Rb86	2.57E-01	9.73E-01	5.00E-02	0.00E+00	0.00E+00	0.00E+00
Cs134	2.58E+01	9.72E+01	5.00E+00	0.00E+00	0.00E+00	0.00E+00
Cs136	8.05E+00	3.03E+01	1.80E+00	0.00E+00	0.00E+00	0.00E+00
Cs137	1.54E+01	5.79E+01	3.40E+00	0.00E+00	0.00E+00	0.00E+00
Sb127	4.63E-01	9.84E+00	6.00E-01	0.00E+00	0.00E+00	0.00E+00
Sb129	1.25E+00	2.31E+01	1.00E+00	0.00E+00	0.00E+00	0.00E+00
Te127m	6.26E-02	1.34E+00	8.00E-02	0.00E+00	0.00E+00	0.00E+00
Te127	4.44E-01	8.91E+00	5.00E-01	0.00E+00	0.00E+00	0.00E+00
Te129m	2.01E-01	4.29E+00	2.50E-01	0.00E+00	0.00E+00	0.00E+00
Te129	9.59E-01	1.31E+01	8.00E-01	0.00E+00	0.00E+00	0.00E+00
Te131m	6.05E-01	1.27E+01	7.00E-01	0.00E+00	0.00E+00	0.00E+00
Te132	5.92E+00	1.25E+02	7.00E+00	0.00E+00	0.00E+00	0.00E+00
Ba137m	6.49E+00	3.12E+01	3.40E+00	0.00E+00	0.00E+00	0.00E+00
Ba139	2.24E+00	3.09E+01	7.00E-01	0.00E+00	0.00E+00	0.00E+00

Ref.

Table J 1.2: Case 1Ay (cont.)

Δ t (hrs)	0- 0.667	0.667-2.667	2.667-8	8-24	24-96	96-720
Ba140	2.93E+00	6.25E+01	3.60E+00	0.00E+00	0.00E+00	0.00E+00
Mo99	3.99E-01	8.43E+00	4.80E-01	0.00E+00	0.00E+00	0.00E+00
Tc99m	3.29E-01	6.38E+00	3.60E-01	0.00E+00	0.00E+00	0.00E+00
Ru103	3.36E-01	7.16E+00	4.10E-01	0.00E+00	0.00E+00	0.00E+00
Ru105	2.14E-01	3.97E+00	1.70E-01	0.00E+00	0.00E+00	0.00E+00
Ru106	1.38E-01	2.94E+00	1.70E-01	0.00E+00	0.00E+00	0.00E+00
Rh105	2.20E-01	4.61E+00	2.60E-01	0.00E+00	0.00E+00	0.00E+00
Y90	2.02E-03	4.58E-02	5.60E-03	0.00E+00	0.00E+00	0.00E+00
Y91	1.94E-02	4.15E-01	2.60E-02	0.00E+00	0.00E+00	0.00E+00
Y92	2.78E-02	8.47E-01	2.95E-01	0.00E+00	0.00E+00	0.00E+00
Y93	2.31E-02	4.64E-01	2.30E-02	0.00E+00	0.00E+00	0.00E+00
Zr95	2.72E-02	5.80E-01	3.30E-02	0.00E+00	0.00E+00	0.00E+00
Zr97	2.68E-02	5.51E-01	2.90E-02	0.00E+00	0.00E+00	0.00E+00
Nb95	2.73E-02	5.82E-01	3.40E-02	0.00E+00	0.00E+00	0.00E+00
La140	3.22E-02	7.51E-01	1.15E-01	0.00E+00	0.00E+00	0.00E+00
La141	2.43E-02	4.43E-01	1.90E-02	0.00E+00	0.00E+00	0.00E+00
La142	1.98E-02	2.85E-01	8.00E-03	0.00E+00	0.00E+00	0.00E+00
Pr143	2.42E-02	5.15E-01	3.00E-02	0.00E+00	0.00E+00	0.00E+00
Nd147	1.10E-02	2.33E-01	1.40E-02	0.00E+00	0.00E+00	0.00E+00
Am241	4.56E-06	9.74E-05	5.00E-06	0.00E+00	0.00E+00	0.00E+00
Cm242	1.13E-03	2.41E-02	1.40E-03	0.00E+00	0.00E+00	0.00E+00
Cm244	7.49E-05	1.61E-03	9.00E-05	0.00E+00	0.00E+00	0.00E+00
Ce141	6.91E-02	1.47E+00	9.00E-02	0.00E+00	0.00E+00	0.00E+00
Ce143	6.28E-02	1.32E+00	7.00E-02	0.00E+00	0.00E+00	0.00E+00
Ce144	5.72E-02	1.22E+00	7.00E-02	0.00E+00	0.00E+00	0.00E+00
Np239	8.87E-01	1.87E+01	1.10E+00	0.00E+00	0.00E+00	0.00E+00
Pu238	2.24E-04	4.79E-03	2.80E-04	0.00E+00	0.00E+00	0.00E+00
Pu239	2.07E-05	4.42E-04	2.60E-05	0.00E+00	0.00E+00	0.00E+00
Pu240	2.92E-05	6.24E-04	3.60E-05	0.00E+00	0.00E+00	0.00E+00
Pu241	8.49E-03	1.82E-01	1.00E-02	0.00E+00	0.00E+00	0.00E+00
Sr89	1.53E+00	3.26E+01	1.90E+00	0.00E+00	0.00E+00	0.00E+00
Sr90	1.96E-01	4.17E+00	2.50E-01	0.00E+00	0.00E+00	0.00E+00
Sr91	1.85E+00	3.69E+01	1.90E+00	0.00E+00	0.00E+00	0.00E+00
Sr92	1.80E+00	3.06E+01	1.10E+00	0.00E+00	0.00E+00	0.00E+00

Project: Nine Mile Point Nuclear Station Unit: __1_ Disposition: ____

Originator/Date	Reviewer/Date	Calculation No.	Revision
H. Pustulka 12/12/06	N/A	H21C092	00

Ref.

Table J 1.3: Case 1Az

Δ t (hrs)	0-0.667	0.667-2.667	2.667-8	8-24	24-96	96-720
Kr83m	0.00E+00	0.00E+00	4.28E+01	1.59E+02	1.00E+00	0.00E+00
Kr85m	0.00E+00	0.00E+00	4.54E+02	5.96E+03	8.70E+02	0.00E+00
Kr85	0.00E+00	0.00E+00	8.12E+01	4.11E+03	1.77E+04	1.21E+05
Kr87	0.00E+00	0.00E+00	5.14E+01	1.02E+02	0.00E+00	0.00E+00
Kr88	0.00E+00	0.00E+00	6.34E+02	4.65E+03	1.80E+02	0.00E+00
Kr89	0.00E+00	0.00E+00	1.23E-33	0.00E+00	0.00E+00	0.00E+00
Xe131m	0.00E+00	0.00E+00	6.17E+01	3.05E+03	1.19E+04	3.97E+04
Xe133m	0.00E+00	0.00E+00	3.06E+02	1.35E+04	3.57E+04	1.89E+04
Xe133	9.68E-01	3.90E+02	1.39E+04	5.33E+05	2.16E+06	3.78E+06
Xe135m	0.00E+00	0.00E+00	1.20E-05	3.00E-07	0.00E+00	0.00E+00
Xe135	1.20E+01	4.38E+03	3.42E+04	1.76E+05	1.91E+05	1.00E+03
Xe137	0.00E+00	0.00E+00	7.65E-27	0.00E+00	0.00E+00	0.00E+00
Xe138	0.00E+00	0.00E+00	3.10E-04	1.20E-05	0.00E+00	0.00E+00
I131Org	1.05E-01	1.25E+01	3.15E+01	8.79E+01	5.19E+02	1.07E+03
I132Org	1.28E-01	1.05E+01	1.25E+01	1.60E+00	1.00E-01	0.00E+00
I133Org	2.10E-01	2.40E+01	5.61E+01	1.08E+02	2.23E+02	2.00E+01
I134Org	1.47E-01	6.82E+00	2.84E+00	2.00E-02	0.00E+00	0.00E+00
I135Org	1.89E-01	1.97E+01	3.83E+01	3.17E+01	1.31E+01	0.00E+00
I131Elem	1.70E+00	2.02E+02	5.06E+02	1.23E+03	7.66E+03	1.55E+04
I132Elem	2.06E+00	1.69E+02	2.02E+02	2.30E+01	1.00E+00	1.00E+00
I133Elem	3.40E+00	3.89E+02	8.98E+02	1.50E+03	3.27E+03	3.00E+02
I134Elem	2.38E+00	1.11E+02	4.60E+01	0.00E+00	0.00E+00	0.00E+00
I135Elem	3.05E+00	3.18E+02	6.16E+02	4.43E+02	1.90E+02	0.00E+00
I131Part	0.00E+00	0.00E+00	1.34E-03	8.29E-03	2.37E-03	1.00E-04
I132Part	0.00E+00	0.00E+00	2.28E-04	3.33E-04	1.00E-06	0.00E+00
I133Part	0.00E+00	0.00E+00	2.20E-03	1.12E-02	1.80E-03	0.00E+00
I134Part	0.00E+00	0.00E+00	1.09E-05	4.30E-06	0.00E+00	0.00E+00
I135Part	0.00E+00	0.00E+00	1.23E-03	4.13E-03	1.90E-04	0.00E+00
Rb86	0.00E+00	0.00E+00	3.07E-06	1.92E-05	5.80E-06	1.00E-07
Cs134	0.00E+00	0.00E+00	3.10E-04	1.97E-03	6.10E-04	2.00E-05
Cs136	0.00E+00	0.00E+00	9.56E-05	5.96E-04	1.78E-04	3.00E-06
Cs137	0.00E+00	0.00E+00	1.85E-04	1.18E-03	3.70E-04	1.00E-05
Sb127	0.00E+00	0.00E+00	3.01E-05	1.81E-04	4.90E-05	0.00E+00
Sb129	0.00E+00	0.00E+00	2.96E-05	7.54E-05	1.00E-06	0.00E+00
Te127m	0.00E+00	0.00E+00	4.27E-06	2.70E-05	8.40E-06	2.00E-07
Te127	0.00E+00	0.00E+00	2.84E-05	1.82E-04	5.20E-05	1.00E-06
Te129m	0.00E+00	0.00E+00	1.37E-05	8.60E-05	2.63E-05	1.00E-06
Te129	0.00E+00	0.00E+00	3.75E-05	1.02E-04	2.00E-06	0.00E+00
Te131m	0.00E+00	0.00E+00	3.55E-05	1.93E-04	3.80E-05	0.00E+00
Te132	0.00E+00	0.00E+00	3.82E-04	2.28E-03	5.90E-04	0.00E+00
Ba137m	0.00E+00	0.00E+00	1.85E-04	1.18E-03	3.70E-04	1.00E-05
Ba139	0.00E+00	0.00E+00	5.64E-06	4.46E-06	0.00E+00	0.00E+00

Ref.

Table J 1.3: Case 1Az (cont.)

Δ t (hrs)	0-0.667	0.667-2.667	2.667-8	8-24	24-96	96-720
Ba140	0.00E+00	0.00E+00	1.97E-04	1.23E-03	3.70E-04	0.00E+00
Mo99	0.00E+00	0.00E+00	2.54E-05	1.50E-04	3.80E-05	0.00E+00
Tc99m	0.00E+00	0.00E+00	2.23E-05	1.47E-04	4.10E-05	0.00E+00
Ru103	0.00E+00	0.00E+00	2.28E-05	1.44E-04	4.40E-05	1.00E-06
Ru105	0.00E+00	0.00E+00	5.22E-06	1.36E-05	3.00E-07	0.00E+00
Ru106	0.00E+00	0.00E+00	9.41E-06	5.96E-05	1.86E-05	5.00E-07
Rh105	0.00E+00	0.00E+00	1.40E-05	7.96E-05	1.74E-05	0.00E+00
Y90	0.00E+00	0.00E+00	8.63E-07	1.11E-05	8.10E-06	7.00E-07
Y91	0.00E+00	0.00E+00	1.56E-06	1.11E-05	3.90E-06	1.00E-07
Y92	0.00E+00	0.00E+00	2.76E-05	9.44E-05	2.00E-06	0.00E+00
Y93	0.00E+00	0.00E+00	1.00E-06	4.11E-06	3.50E-07	0.00E+00
Zr95	0.00E+00	0.00E+00	1.85E-06	1.17E-05	3.70E-06	1.00E-07
Zr97	0.00E+00	0.00E+00	1.40E-06	6.74E-06	9.50E-07	1.00E-08
Nb95	0.00E+00	0.00E+00	1.86E-06	1.18E-05	3.60E-06	2.00E-07
La140	0.00E+00	0.00E+00	1.90E-05	2.44E-04	1.63E-04	6.00E-06
La141	0.00E+00	0.00E+00	5.20E-07	1.23E-06	2.00E-08	0.00E+00
La142	0.00E+00	0.00E+00	7.10E-08	6.50E-08	0.00E+00	0.00E+00
Pr143	0.00E+00	0.00E+00	1.67E-06	1.07E-05	3.40E-06	1.00E-07
Nd147	0.00E+00	0.00E+00	7.35E-07	4.58E-06	1.35E-06	2.00E-08
Am241	0.00E+00	0.00E+00	3.11E-10	1.98E-09	6.10E-10	2.00E-11
Cm242	0.00E+00	0.00E+00	7.69E-08	4.87E-07	1.51E-07	5.00E-09
Cm244	0.00E+00	0.00E+00	5.12E-09	3.25E-08	1.01E-08	3.00E-10
Ce141	0.00E+00	0.00E+00	4.70E-06	2.96E-05	9.10E-06	2.00E-07
Ce143	0.00E+00	0.00E+00	3.73E-06	2.05E-05	4.30E-06	0.00E+00
Ce144	0.00E+00	0.00E+00	3.91E-06	2.48E-05	7.70E-06	2.00E-07
Np239	0.00E+00	0.00E+00	5.59E-05	3.26E-04	7.90E-05	0.00E+00
Pu238	0.00E+00	0.00E+00	1.53E-08	9.67E-08	3.10E-08	1.00E-09
Pu239	0.00E+00	0.00E+00	1.42E-09	8.98E-09	2.80E-09	1.00E-10
Pu240	0.00E+00	0.00E+00	2.00E-09	1.27E-08	3.90E-09	1.00E-10
Pu241	0.00E+00	0.00E+00	5.80E-07	3.68E-06	1.14E-06	4.00E-08
Sr89	0.00E+00	0.00E+00	1.04E-04	6.56E-04	2.02E-04	5.00E-06
Sr90	0.00E+00	0.00E+00	1.34E-05	8.47E-05	2.69E-05	0.00E+00
Sr91	0.00E+00	0.00E+00	7.79E-05	3.11E-04	2.50E-05	0.00E+00
Sr92	0.00E+00	0.00E+00	2.29E-05	3.93E-05	2.00E-07	0.00E+00

Ref.

The ΔCi value is multiplied by the appropriate X/Q, and the conversion factor of Ci to disintegrations per second (1 Ci =3.7E10 dis/sec). Tables J2.1, J2.2 and J2.3 give the resulting values in dis/m3 for Cases 1Ax, 1Ay and 1Az respectively.

Tables J 2.1, J 2.2 & J 2.3: dis/m^3 by X/Q interval

Table J 2.1: Case 1Ax

Δ t (hrs)	0- 0.667	0.667-2.667	2.667-8	8-24	24-96	96-720
Kr83m	2.92E+08	1.98E+10	1.62E+10	1.15E+09	0.00E+00	0.00E+00
Kr85m	6.82E+08	6.21E+10	1.01E+11	3.11E+10	1.30E+09	0.00E+00
Kr85	4.24E+07	4.77E+09	1.33E+10	1.71E+10	3.24E+10	2.12E+11
Kr87	1.08E+09	5.87E+10	3.07E+10	7.66E+08	0.00E+00	0.00E+00
Kr88	1.75E+09	1.41E+11	1.73E+11	2.76E+10	0.00E+00	0.00E+00
Kr89	3.44E+07	3.81E+05	0.00E+00	0.00E+00	0.00E+00	0.00E+00
Xe131m	3.27E+07	3.67E+09	1.02E+10	1.27E+10	2.17E+10	6.93E+10
Xe133m	1.74E+08	1.93E+10	5.14E+10	5.75E+10	6.35E+10	3.26E+10
Xe133	5.67E+09	6.34E+11	1.74E+12	2.13E+12	3.28E+12	5.33E+12
Xe135m	3.38E+08	1.97E+09	1.52E+07	0.00E+00	0.00E+00	0.00E+00
Xe135	2.05E+09	2.11E+11	5.02E+11	3.98E+11	9.97E+10	5.62E+08
Xe137	1.22E+08	5.72E+06	0.00E+00	0.00E+00	0.00E+00	0.00E+00
Xe138	1.57E+09	1.15E+10	1.30E+08	0.00E+00	0.00E+00	0.00E+00
I131Org	3.70E+06	1.62E+08	4.13E+08	5.01E+08	8.16E+08	1.95E+09
I132Org	4.65E+06	1.37E+08	1.29E+08	1.41E+07	0.00E+00	0.00E+00
I133Org	7.40E+06	3.12E+08	7.12E+08	6.40E+08	3.50E+08	2.81E+07
I134Org	5.74E+06	9.13E+07	2.36E+07	1.53E+05	0.00E+00	0.00E+00
I135Org	6.71E+06	2.56E+08	4.56E+08	2.10E+08	2.07E+07	0.00E+00
I131Elem	9.91E+06	1.14E+08	5.67E+07	5.21E+06	0.00E+00	0.00E+00
I132Elem	1.28E+07	1.55E+08	1.85E+08	2.45E+07	1.30E+06	1.69E+06
I133Elem	1.99E+07	2.20E+08	9.96E+07	7.66E+06	0.00E+00	0.00E+00
I134Elem	1.62E+07	7.55E+07	5.19E+06	0.00E+00	0.00E+00	0.00E+00
I135Elem	1.81E+07	1.84E+08	6.77E+07	3.22E+06	0.00E+00	0.00E+00
I131Part	1.84E+08	2.18E+09	1.09E+09	9.96E+07	0.00E+00	0.00E+00
I132Part	2.36E+08	1.95E+09	4.29E+08	6.13E+06	0.00E+00	0.00E+00
I133Part	3.70E+08	4.23E+09	1.90E+09	1.46E+08	0.00E+00	0.00E+00
I134Part	3.01E+08	1.43E+09	1.02E+08	0.00E+00	0.00E+00	0.00E+00
I135Part	3.38E+08	3.52E+09	1.30E+09	6.13E+07	0.00E+00	0.00E+00
Rb86	5.02E+05	5.06E+06	2.53E+06	2.30E+05	6.48E+03	0.00E+00
Cs134	5.02E+07	5.06E+08	2.55E+08	2.37E+07	0.00E+00	0.00E+00
Cs136	1.57E+07	1.58E+08	7.92E+07	7.20E+06	6.47E+04	0.00E+00
Cs137	2.99E+07	3.02E+08	1.54E+08	1.38E+07	0.00E+00	0.00E+00
Sb127	7.88E+05	4.51E+07	2.21E+07	1.91E+06	0.00E+00	0.00E+00
Sb129	2.12E+06	1.04E+08	3.27E+07	1.07E+06	0.00E+00	0.00E+00
Te127m	1.06E+05	6.14E+06	3.07E+06	2.76E+05	6.48E+03	0.00E+00
Te127	7.55E+05	4.14E+07	2.08E+07	1.91E+06	0.00E+00	0.00E+00
Te129m	3.42E+05	1.97E+07	9.78E+06	8.81E+05	0.00E+00	0.00E+00
Te129	1.63E+06	6.84E+07	3.53E+07	1.46E+06	0.00E+00	0.00E+00

Ref.

Table J 2.1: Case 1Ax (cont.)

Δ t (hrs)	0- 0.667	0.667-2.667	2.667-8	8-24	24-96	96-720
Te131m	1.03E+06	5.80E+07	2.71E+07	2.14E+06	0.00E+00	0.00E+00
Te132	1.01E+07	5.77E+08	2.79E+08	2.45E+07	0.00E+00	0.00E+00
Ba137m	1.49E+07	2.23E+08	1.53E+08	1.38E+07	0.00E+00	0.00E+00
Ba139	3.81E+06	1.34E+08	1.80E+07	7.66E+04	0.00E+00	0.00E+00
Ba140	4.98E+06	2.87E+08	1.41E+08	1.30E+07	0.00E+00	0.00E+00
Mo99	6.77E+05	3.88E+07	1.86E+07	1.61E+06	0.00E+00	0.00E+00
Tc99m	5.58E+05	3.00E+07	1.57E+07	1.61E+06	0.00E+00	0.00E+00
Ru103	5.69E+05	3.30E+07	1.64E+07	1.46E+06	0.00E+00	5.62E+04
Ru105	3.64E+05	1.79E+07	5.69E+06	1.99E+05	0.00E+00	0.00E+00
Ru106	2.34E+05	1.35E+07	6.73E+06	6.20E+05	6.48E+03	0.00E+00
Rh105	3.74E+05	2.13E+07	1.03E+07	9.19E+05	0.00E+00	0.00E+00
Y90	3.44E+03	2.62E+05	4.17E+05	9.73E+04	1.94E+03	0.00E+00
Y91	3.29E+04	1.93E+06	1.06E+06	1.15E+05	0.00E+00	0.00E+00
Y92	4.78E+04	1.00E+07	2.00E+07	1.46E+06	0.00E+00	0.00E+00
Y93	3.94E+04	2.11E+06	8.59E+05	5.36E+04	0.00E+00	0.00E+00
Zr95	4.61E+04	2.67E+06	1.32E+06	1.23E+05	0.00E+00	0.00E+00
Zr97	4.55E+04	2.52E+06	1.12E+06	7.66E+04	0.00E+00	0.00E+00
Nb95	4.63E+04	2.68E+06	1.33E+06	1.23E+05	0.00E+00	0.00E+00
La140	5.48E+04	4.67E+06	8.98E+06	2.14E+06	4.53E+04	0.00E+00
La141	4.13E+04	1.99E+06	6.02E+05	1.84E+04	0.00E+00	0.00E+00
La142	3.38E+04	1.25E+06	1.88E+05	1.53E+03	0.00E+00	0.00E+00
Pr143	4.11E+04	2.37E+06	1.19E+06	1.15E+05	0.00E+00	0.00E+00
Nd147	1.86E+04	1.07E+06	5.30E+05	4.83E+04	0.00E+00	0.00E+00
Am241	7.75E+00	4.47E+02	2.23E+02	2.07E+01	0.00E+00	0.00E+00
Cm242	1.92E+03	1.11E+05	5.52E+04	5.05E+03	6.48E+01	0.00E+00
Cm244	1.27E+02	7.36E+03	3.66E+03	3.45E+02	0.00E+00	0.00E+00
Ce141	1.17E+05	6.77E+06	3.38E+06	3.06E+05	6.48E+03	0.00E+00
Ce143	1.07E+05	6.02E+06	2.81E+06	2.30E+05	0.00E+00	0.00E+00
Ce144	9.72E+04	5.62E+06	2.79E+06	2.60E+05	0.00E+00	0.00E+00
Np239	1.51E+06	8.61E+07	4.11E+07	3.52E+06	6.47E+04	0.00E+00
Pu238	3.81E+02	2.20E+04	1.09E+04	9.96E+02	6.48E+01	0.00E+00
Pu239	3.53E+01	2.04E+03	1.02E+03	9.19E+01	0.00E+00	0.00E+00
Pu240	4.96E+01	2.87E+03	1.44E+03	1.30E+02	0.00E+00	0.00E+00
Pu241	1.44E+04	8.36E+05	4.13E+05	3.83E+04	6.48E+02	0.00E+00
Sr89	2.60E+06	1.50E+08	7.45E+07	6.89E+06	6.47E+04	0.00E+00
Sr90	3.33E+05	1.92E+07	9.57E+06	9.04E+05	0.00E+00	0.00E+00
Sr91	3.14E+06	1.68E+08	6.75E+07	3.91E+06	0.00E+00	0.00E+00
Sr92	3.05E+06	1.36E+08	3.33E+07	6.89E+05	0.00E+00	0.00E+00

Project: Nine Mile Point Nuclear Station Unit: __1_ Disposition: ____

Originator/Date	Reviewer/Date	Calculation No.	Revision
H. Pustulka 12/12/06	N/A	H21C092	00

Ref.

Table J 2.2: Case 1Ay

Δ t (hrs)	0- 0.667	0.667-2.667	2.667-8	8-24	24-96	96-720
Kr83m	7.72E+08	4.82E+10	2.57E+10	0.00E+00	0.00E+00	0.00E+00
Kr85m	1.80E+09	1.51E+11	1.34E+11	0.00E+00	0.00E+00	0.00E+00
Kr85	1.11E+08	1.16E+10	1.48E+10	0.00E+00	0.00E+00	0.00E+00
Kr87	2.84E+09	1.43E+11	5.31E+10	0.00E+00	0.00E+00	0.00E+00
Kr88	4.61E+09	3.45E+11	2.47E+11	0.00E+00	0.00E+00	0.00E+00
Kr89	9.64E+07	3.57E+05	0.00E+00	0.00E+00	0.00E+00	0.00E+00
Xe131m	8.60E+07	8.95E+09	1.14E+10	0.00E+00	0.00E+00	0.00E+00
Xe133m	4.59E+08	4.71E+10	5.82E+10	0.00E+00	0.00E+00	0.00E+00
Xe133	1.50E+10	1.55E+12	1.96E+12	0.00E+00	0.00E+00	0.00E+00
Xe135m	8.98E+08	4.90E+09	2.90E+07	0.00E+00	0.00E+00	0.00E+00
Xe135	5.82E+09	5.21E+11	6.14E+11	0.00E+00	0.00E+00	0.00E+00
Xe137	3.39E+08	1.61E+07	0.00E+00	0.00E+00	0.00E+00	0.00E+00
Xe138	4.16E+09	2.85E+10	2.90E+08	0.00E+00	0.00E+00	0.00E+00
I131Org	6.06E+07	5.76E+08	5.03E+08	0.00E+00	0.00E+00	0.00E+00
I132Org	7.71E+07	5.05E+08	2.14E+08	0.00E+00	0.00E+00	0.00E+00
I133Org	1.22E+08	1.11E+09	8.97E+08	0.00E+00	0.00E+00	0.00E+00
I134Org	9.62E+07	3.63E+08	5.12E+07	0.00E+00	0.00E+00	0.00E+00
I135Org	1.10E+08	9.24E+08	6.26E+08	0.00E+00	0.00E+00	0.00E+00
I131Elem	1.70E+09	6.83E+09	1.55E+09	0.00E+00	0.00E+00	0.00E+00
I132Elem	2.16E+09	6.47E+09	8.40E+08	3.42E+06	0.00E+00	1.82E+06
I133Elem	3.42E+09	1.33E+10	2.80E+09	0.00E+00	0.00E+00	0.00E+00
I134Elem	2.71E+09	5.12E+09	2.41E+08	0.00E+00	0.00E+00	0.00E+00
I135Elem	3.10E+09	1.12E+10	2.14E+09	0.00E+00	0.00E+00	0.00E+00
I131Part	9.16E+08	7.63E+09	2.41E+08	0.00E+00	0.00E+00	0.00E+00
I132Part	1.18E+09	7.06E+09	1.35E+08	0.00E+00	0.00E+00	0.00E+00
I133Part	1.84E+09	1.48E+10	4.83E+08	0.00E+00	0.00E+00	0.00E+00
I134Part	1.52E+09	5.42E+09	4.83E+07	0.00E+00	0.00E+00	0.00E+00
I135Part	1.68E+09	1.24E+10	3.28E+08	0.00E+00	0.00E+00	0.00E+00
Rb86	2.48E+06	1.74E+07	4.83E+05	0.00E+00	0.00E+00	0.00E+00
Cs134	2.49E+08	1.73E+09	4.83E+07	0.00E+00	0.00E+00	0.00E+00
Cs136	7.77E+07	5.39E+08	1.74E+07	0.00E+00	0.00E+00	0.00E+00
Cs137	1.49E+08	1.03E+09	3.28E+07	0.00E+00	0.00E+00	0.00E+00
Sb127	4.47E+06	1.75E+08	5.79E+06	0.00E+00	0.00E+00	0.00E+00
Sb129	1.21E+07	4.11E+08	9.66E+06	0.00E+00	0.00E+00	0.00E+00
Te127m	6.05E+05	2.39E+07	7.73E+05	0.00E+00	0.00E+00	0.00E+00
Te127	4.29E+06	1.59E+08	4.83E+06	0.00E+00	0.00E+00	0.00E+00
Te129m	1.94E+06	7.65E+07	2.41E+06	0.00E+00	0.00E+00	0.00E+00
Te129	9.26E+06	2.34E+08	7.73E+06	0.00E+00	0.00E+00	0.00E+00
Te131m	5.84E+06	2.26E+08	6.76E+06	0.00E+00	0.00E+00	0.00E+00
Te132	5.72E+07	2.23E+09	6.76E+07	0.00E+00	0.00E+00	0.00E+00

Project: Nine Mile Point Nuclear Station Unit: __1_ Disposition: ____

Originator/Date	Reviewer/Date	Calculation No.	Revision
H. Pustulka 12/12/06	N/A	H21C092	00

Ref.

Table J 2.2: Case 1Ay (cont.)

Δ t (hrs)	0- 0.667	0.667-2.667	2.667-8	8-24	24-96	96-720
Ba137m	6.27E+07	5.57E+08	3.28E+07	0.00E+00	0.00E+00	0.00E+00
Ba139	2.16E+07	5.50E+08	6.76E+06	0.00E+00	0.00E+00	0.00E+00
Ba140	2.83E+07	1.11E+09	3.48E+07	0.00E+00	0.00E+00	0.00E+00
Mo99	3.85E+06	1.50E+08	4.64E+06	0.00E+00	0.00E+00	0.00E+00
Tc99m	3.18E+06	1.14E+08	3.48E+06	0.00E+00	0.00E+00	0.00E+00
Ru103	3.24E+06	1.28E+08	3.96E+06	0.00E+00	0.00E+00	0.00E+00
Ru105	2.07E+06	7.07E+07	1.64E+06	0.00E+00	0.00E+00	0.00E+00
Ru106	1.33E+06	5.25E+07	1.64E+06	0.00E+00	0.00E+00	0.00E+00
Rh105	2.12E+06	8.22E+07	2.51E+06	0.00E+00	0.00E+00	0.00E+00
Y90	1.95E+04	8.16E+05	5.41E+04	0.00E+00	0.00E+00	0.00E+00
Y91	1.87E+05	7.39E+06	2.51E+05	0.00E+00	0.00E+00	0.00E+00
Y92	2.68E+05	1.51E+07	2.85E+06	0.00E+00	0.00E+00	0.00E+00
Y93	2.23E+05	8.27E+06	2.22E+05	0.00E+00	0.00E+00	0.00E+00
Zr95	2.63E+05	1.03E+07	3.19E+05	0.00E+00	0.00E+00	0.00E+00
Zr97	2.59E+05	9.83E+06	2.80E+05	0.00E+00	0.00E+00	0.00E+00
Nb95	2.64E+05	1.04E+07	3.28E+05	0.00E+00	0.00E+00	0.00E+00
La140	3.11E+05	1.34E+07	1.11E+06	0.00E+00	0.00E+00	0.00E+00
La141	2.35E+05	7.90E+06	1.83E+05	0.00E+00	0.00E+00	0.00E+00
La142	1.91E+05	5.09E+06	7.73E+04	0.00E+00	0.00E+00	0.00E+00
Pr143	2.34E+05	9.18E+06	2.90E+05	0.00E+00	0.00E+00	0.00E+00
Nd147	1.06E+05	4.16E+06	1.35E+05	0.00E+00	0.00E+00	0.00E+00
Am241	4.40E+01	1.74E+03	4.83E+01	0.00E+00	0.00E+00	0.00E+00
Cm242	1.09E+04	4.29E+05	1.35E+04	0.00E+00	0.00E+00	0.00E+00
Cm244	7.23E+02	2.86E+04	8.69E+02	0.00E+00	0.00E+00	0.00E+00
Ce141	6.67E+05	2.62E+07	8.69E+05	0.00E+00	0.00E+00	0.00E+00
Ce143	6.06E+05	2.35E+07	6.76E+05	0.00E+00	0.00E+00	0.00E+00
Ce144	5.52E+05	2.18E+07	6.76E+05	0.00E+00	0.00E+00	0.00E+00
Np239	8.57E+06	3.34E+08	1.06E+07	0.00E+00	0.00E+00	0.00E+00
Pu238	2.16E+03	8.54E+04	2.70E+03	0.00E+00	0.00E+00	0.00E+00
Pu239	2.00E+02	7.89E+03	2.51E+02	0.00E+00	0.00E+00	0.00E+00
Pu240	2.82E+02	1.11E+04	3.48E+02	0.00E+00	0.00E+00	0.00E+00
Pu241	8.20E+04	3.24E+06	9.66E+04	0.00E+00	0.00E+00	0.00E+00
Sr89	1.48E+07	5.81E+08	1.83E+07	0.00E+00	0.00E+00	0.00E+00
Sr90	1.89E+06	7.44E+07	2.41E+06	0.00E+00	0.00E+00	0.00E+00
Sr91	1.79E+07	6.57E+08	1.83E+07	0.00E+00	0.00E+00	0.00E+00
Sr92	1.74E+07	5.46E+08	1.06E+07	0.00E+00	0.00E+00	0.00E+00

Project: Nine Mile Point Nuclear Station Unit: __1_ Disposition: ____

Originator/Date	Reviewer/Date	Calculation No.	Revision
H. Pustulka 12/12/06	N/A	H21C092	00

Ref.

Table J 2.3: Case 1Az

Δ t (hrs)	0- 0.667	0.667-2.667	2.667-8	8-24	24-96	96-720
Kr83m	0.00E+00	0.00E+00	2.00E+08	2.53E+08	1.32E+06	0.00E+00
Kr85m	0.00E+00	0.00E+00	2.12E+09	9.48E+09	1.15E+09	0.00E+00
Kr85	0.00E+00	0.00E+00	3.79E+08	6.54E+09	2.35E+10	1.16E+11
Kr87	0.00E+00	0.00E+00	2.40E+08	1.62E+08	0.00E+00	0.00E+00
Kr88	0.00E+00	0.00E+00	2.96E+09	7.39E+09	2.38E+08	0.00E+00
Kr89	0.00E+00	0.00E+00	5.73E-27	0.00E+00	0.00E+00	0.00E+00
Xe131m	0.00E+00	0.00E+00	2.88E+08	4.85E+09	1.57E+10	3.80E+10
Xe133m	0.00E+00	0.00E+00	1.43E+09	2.15E+10	4.73E+10	1.81E+10
Xe133	4.51E+06	3.28E+09	6.48E+10	8.48E+11	2.87E+12	3.62E+12
Xe135m	0.00E+00	0.00E+00	5.59E+01	4.77E-01	0.00E+00	0.00E+00
Xe135	5.59E+07	3.68E+10	1.59E+11	2.81E+11	2.53E+11	9.58E+08
Xe137	0.00E+00	0.00E+00	3.57E-20	0.00E+00	0.00E+00	0.00E+00
Xe138	0.00E+00	0.00E+00	1.45E+03	1.91E+01	0.00E+00	0.00E+00
I131Org	4.90E+05	1.05E+08	1.47E+08	1.40E+08	6.87E+08	1.02E+09
I132Org	5.97E+05	8.80E+07	5.83E+07	2.55E+06	1.32E+05	0.00E+00
I133Org	9.79E+05	2.01E+08	2.62E+08	1.71E+08	2.95E+08	1.92E+07
I134Org	6.85E+05	5.73E+07	1.32E+07	3.18E+04	0.00E+00	0.00E+00
I135Org	8.81E+05	1.66E+08	1.79E+08	5.04E+07	1.74E+07	0.00E+00
I131Elem	7.93E+06	1.70E+09	2.36E+09	1.96E+09	1.01E+10	1.49E+10
I132Elem	9.60E+06	1.42E+09	9.42E+08	3.66E+07	1.32E+06	9.58E+05
I133Elem	1.59E+07	3.26E+09	4.19E+09	2.39E+09	4.33E+09	2.87E+08
I134Elem	1.11E+07	9.29E+08	2.14E+08	0.00E+00	0.00E+00	0.00E+00
I135Elem	1.42E+07	2.67E+09	2.87E+09	7.05E+08	2.52E+08	0.00E+00
I131Part	0.00E+00	0.00E+00	6.25E+03	1.32E+04	3.14E+03	9.58E+01
I132Part	0.00E+00	0.00E+00	1.06E+03	5.30E+02	1.32E+00	0.00E+00
I133Part	0.00E+00	0.00E+00	1.03E+04	1.78E+04	2.38E+03	0.00E+00
I134Part	0.00E+00	0.00E+00	5.08E+01	6.84E+00	0.00E+00	0.00E+00
I135Part	0.00E+00	0.00E+00	5.73E+03	6.57E+03	2.52E+02	0.00E+00
Rb86	0.00E+00	0.00E+00	1.43E+01	3.06E+01	7.68E+00	9.58E-02
Cs134	0.00E+00	0.00E+00	1.45E+03	3.13E+03	8.08E+02	1.92E+01
Cs136	0.00E+00	0.00E+00	4.46E+02	9.49E+02	2.36E+02	2.87E+00
Cs137	0.00E+00	0.00E+00	8.62E+02	1.87E+03	4.90E+02	9.58E+00
Sb127	0.00E+00	0.00E+00	1.40E+02	2.88E+02	6.49E+01	0.00E+00
Sb129	0.00E+00	0.00E+00	1.38E+02	1.20E+02	1.32E+00	0.00E+00
Te127m	0.00E+00	0.00E+00	1.99E+01	4.30E+01	1.11E+01	1.92E-01
Te127	0.00E+00	0.00E+00	1.32E+02	2.89E+02	6.89E+01	9.58E-01
Te129m	0.00E+00	0.00E+00	6.39E+01	1.37E+02	3.48E+01	9.58E-01
Te129	0.00E+00	0.00E+00	1.75E+02	1.61E+02	2.65E+00	0.00E+00
Te131m	0.00E+00	0.00E+00	1.66E+02	3.06E+02	5.03E+01	0.00E+00
Te132	0.00E+00	0.00E+00	1.78E+03	3.62E+03	7.82E+02	0.00E+00
Ba137m	0.00E+00	0.00E+00	8.62E+02	1.87E+03	4.90E+02	9.58E+00

Ref.

Table J 2.3: Case 1Az (cont.)

Δ t (hrs)	0- 0.667	0.667-2.667	2.667-8	8-24	24-96	96-720
Ba139	0.00E+00	0.00E+00	2.63E+01	7.10E+00	0.00E+00	0.00E+00
Ba140	0.00E+00	0.00E+00	9.18E+02	1.96E+03	4.90E+02	0.00E+00
Mo99	0.00E+00	0.00E+00	1.18E+02	2.38E+02	5.03E+01	0.00E+00
Tc99m	0.00E+00	0.00E+00	1.04E+02	2.33E+02	5.43E+01	0.00E+00
Ru103	0.00E+00	0.00E+00	1.06E+02	2.29E+02	5.83E+01	9.58E-01
Ru105	0.00E+00	0.00E+00	2.43E+01	2.16E+01	3.97E-01	0.00E+00
Ru106	0.00E+00	0.00E+00	4.39E+01	9.48E+01	2.46E+01	4.79E-01
Rh105	0.00E+00	0.00E+00	6.53E+01	1.27E+02	2.30E+01	0.00E+00
Y90	0.00E+00	0.00E+00	4.02E+00	1.77E+01	1.07E+01	6.71E-01
Y91	0.00E+00	0.00E+00	7.27E+00	1.77E+01	5.17E+00	9.58E-02
Y92	0.00E+00	0.00E+00	1.29E+02	1.50E+02	2.65E+00	0.00E+00
Y93	0.00E+00	0.00E+00	4.66E+00	6.54E+00	4.64E-01	0.00E+00
Zr95	0.00E+00	0.00E+00	8.62E+00	1.85E+01	4.90E+00	9.58E-02
Zr97	0.00E+00	0.00E+00	6.53E+00	1.07E+01	1.26E+00	9.58E-03
Nb95	0.00E+00	0.00E+00	8.67E+00	1.88E+01	4.77E+00	1.92E-01
La140	0.00E+00	0.00E+00	8.86E+01	3.88E+02	2.16E+02	5.75E+00
La141	0.00E+00	0.00E+00	2.42E+00	1.96E+00	2.65E-02	0.00E+00
La142	0.00E+00	0.00E+00	3.31E-01	1.03E-01	0.00E+00	0.00E+00
Pr143	0.00E+00	0.00E+00	7.79E+00	1.71E+01	4.50E+00	9.58E-02
Nd147	0.00E+00	0.00E+00	3.43E+00	7.28E+00	1.79E+00	1.92E-02
Am241	0.00E+00	0.00E+00	1.45E-03	3.15E-03	8.08E-04	1.92E-05
Cm242	0.00E+00	0.00E+00	3.59E-01	7.75E-01	2.00E-01	4.79E-03
Cm244	0.00E+00	0.00E+00	2.39E-02	5.17E-02	1.34E-02	2.87E-04
Ce141	0.00E+00	0.00E+00	2.19E+01	4.71E+01	1.21E+01	1.92E-01
Ce143	0.00E+00	0.00E+00	1.74E+01	3.26E+01	5.70E+00	0.00E+00
Ce144	0.00E+00	0.00E+00	1.82E+01	3.94E+01	1.02E+01	1.92E-01
Np239	0.00E+00	0.00E+00	2.61E+02	5.19E+02	1.05E+02	0.00E+00
Pu238	0.00E+00	0.00E+00	7.13E-02	1.54E-01	4.11E-02	9.58E-04
Pu239	0.00E+00	0.00E+00	6.62E-03	1.43E-02	3.71E-03	9.58E-05
Pu240	0.00E+00	0.00E+00	9.32E-03	2.02E-02	5.17E-03	9.58E-05
Pu241	0.00E+00	0.00E+00	2.70E+00	5.85E+00	1.51E+00	3.83E-02
Sr89	0.00E+00	0.00E+00	4.85E+02	1.04E+03	2.68E+02	4.79E+00
Sr90	0.00E+00	0.00E+00	6.25E+01	1.35E+02	3.56E+01	0.00E+00
Sr91	0.00E+00	0.00E+00	3.63E+02	4.95E+02	3.31E+01	0.00E+00
Sr92	0.00E+00	0.00E+00	1.07E+02	6.25E+01	2.65E-01	0.00E+00

Ref.

The same MeV/dis values for the radionuclides at six energy levels that were used in Appendix F (Table F1.1) were used in this analysis [Ref. J-2]. It should be noted that Rb88 is handled in this analysis the same way it was in Appendix F.

The values in Tables J2.1, J2.2 and J2.3 are multiplied by the appropriate nuclide specific MeV/dis value found in Table F1.1 for each energy level and then summed by energy level. Converting the result from MeV/m3 to MeV/cc gives the results found in Table J3.

Table J3:Plume Shine Source Strength (MeV/cc) by Pathway, Energy Level and X/Q period

	MeV	MeV	0- 0.667	0.667-2.667	2.667-8	8-24	24-96	96-720
1Ax (MSIV & Permanent Bypass)	(0 to 0.3)	0.2	1.10E+03	9.43E+04	2.17E+05	1.94E+05	1.75E+05	2.44E+05
	(0.3 to 0.5)	0.4	5.88E+02	1.95E+04	1.48E+04	2.99E+03	5.24E+02	5.80E+02
	(0.5 to 1)	0.75	2.27E+03	5.95E+04	6.23E+04	1.56E+04	2.22E+03	6.23E+02
	(1 to 1.5)	1.25	9.57E+02	2.62E+04	2.54E+04	3.88E+03	4.01E+01	2.16E+00
	(1.5 to 2)	1.75	1.95E+03	9.72E+04	1.10E+05	1.73E+04	8.81E+00	4.72E-02
	(2+)	2.5	3.87E+03	2.43E+05	2.74E+05	4.18E+04	1.18E+00	6.35E-02
1Ay (Temporary Bypass)	(0 to 0.3)	0.2	3.18E+03	2.33E+05	2.61E+05	2.43E-02	0.00E+00	1.30E-02
	(0.3 to 0.5)	0.4	2.58E+03	5.13E+04	2.23E+04	4.69E-02	0.00E+00	2.50E-02
	(0.5 to 1)	0.75	2.09E+04	1.88E+05	8.77E+04	6.47E+00	0.00E+00	3.45E+00
	(1 to 1.5)	1.25	8.74E+03	8.50E+04	3.69E+04	1.07E+00	0.00E+00	5.72E-01
	(1.5 to 2)	1.75	7.82E+03	2.46E+05	1.58E+05	9.57E-02	0.00E+00	5.10E-02
	(2+)	2.5	1.06E+04	5.94E+05	3.95E+05	1.29E-01	0.00E+00	6.86E-02
1Az (Stack)	(0 to 0.3)	0.2	1.35E+01	8.59E+03	3.97E+04	1.05E+05	1.90E+05	1.66E+05
	(0.3 to 0.5)	0.4	3.96E+00	7.81E+02	1.40E+03	1.83E+03	3.86E+03	4.73E+03
	(0.5 to 1)	0.75	5.39E+01	7.76E+03	9.13E+03	9.03E+03	8.17E+03	1.44E+03
	(1 to 1.5)	1.25	2.29E+01	3.71E+03	3.89E+03	1.82E+03	5.50E+02	1.81E+01
	(1.5 to 2)	1.75	9.83E+00	1.50E+03	3.22E+03	4.91E+03	2.61E+02	2.68E-02
	(2+)	2.5	1.41E+00	2.28E+02	4.75E+03	1.12E+04	3.73E+02	3.60E-02

Occupancy factors below were used to scale the source appropriately[Ref. J-3 Item 5.5],

- 0-1 day 100%
- 1-4 days 60%
- 4-30 days 40%

The values for each energy level (the sum of each X/Q period, using occupancy factor and each pathway) are provided in the summary results Table J4.

Summary

The calculation provides source strength values for the plume shine by energy level, as can be seen in Table J4. These inputs can be used in the QUAD computer code [Ref. J-4] as discussed in Appendix I.

Ref.

Table J4: Summary of MeV/cc Comparison
(crediting occupancy factor)

MeV	1Ax (MSIV and Perm. Bypass)	1Ay (Temporary Bypass)	1Az (Stack Exhaust)
0.2	7.09E+05	4.96E+05	3.33E+05
0.4	3.85E+04	7.62E+04	8.22E+03
0.75	1.41E+05	2.97E+05	3.14E+04
1.25	5.65E+04	1.31E+05	9.78E+03
1.75	2.27E+05	4.11E+05	9.80E+03
2.5	5.63E+05	9.99E+05	1.64E+04

References

J-1 STARDOSE Model report, Polestar Applied Technology, Inc., Rev. 1, March 2002.

J-2 Memorandum "Generalization of Spreadsheet Methodology for Comparing TID-14844 and AST Gamma Shine Dose Potential" Prepared by James Metcalf 7/27/03.

J-3 PSAT 4026CF.QA.03, "Design Data Base for Application of the Alternative DBA Source Term to Nine Mile Point Unit 1" Revision 0.

J-4 "QADMOD-GP: Point Kernel Gamma-Ray Shielding Code With Geometric Progression Buildup Factors", RSIC Code Package CCC-565.

Appendix K Plume Shine Dose Verification (7 Pages)

Check of Plume Shine Dose Determined in Appendix I

This appendix discusses the conversion of source strength to shine dose by making use of a spreadsheet methodology.

Background/Methodology

Using the specific X/Q value for each time period and location, a hemisphere of activity of radius R is determined. This R value is used in the calculation of the source volume and the build-up factor used to determine shine dose. This is the identical approach used in Appendix I , but Appendix I uses QADMOD [Ref K-1] to perform the integration of dose from the array of source points.

Calculation

Radius of Activity Cloud

It is assumed that the activity forms a hemispherical cloud based on its dispersion coefficients. In this analysis the following X/Q values were used [Ref K-2]. It should be noted that the worst two hour period was taken to be 0.667 to 2.667 hrs, consistent with case 1A' of Appendix E.

Table K-1: X/Q values by release pathway and time step

Time period (hrs)		0- 0.667	0.667-2.667	2.667-8	8-24	24-96	96-720
X/Q (sec/m3)	Stack	1.26E-04	2.27E-04	1.26E-04	4.30E-05	3.58E-05	2.59E-05
	Temp	2.61E-04	4.82E-04	2.61E-04	9.25E-05	6.70E-05	4.93E-05
	MSIV&Perm	5.85E-04	1.03E-03	5.85E-04	2.07E-04	1.75E-04	1.52E-04

Using the model below, a hemispherical volume of radius R is determined to be the cloud of activity around a dose point:

Figure K-1: Plume Schematic

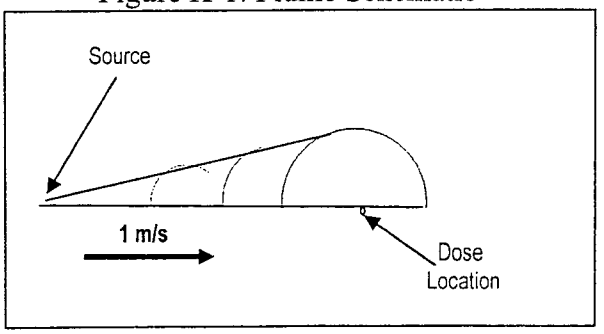

$$\left(\frac{X}{Q}\right)^{-1} = A_{hemisphere} \cdot windspeed = \frac{\pi R^2}{2} \cdot 1\frac{m}{s}$$

$$R(cm) = \frac{100cm}{1m}\sqrt{\frac{2}{\pi}\frac{1}{\frac{X}{Q}\cdot\left(\frac{s}{m^3}\right)\cdot 1\frac{m}{s}}}$$

Ref.

Given R is the radius of the hemisphere and assuming a conservative wind speed of 1 m/s and X/Q in s/m^3, it can be calculated that the radius as a function of X/Q is equal to:

$$R(cm) \approx 80\sqrt{\frac{1}{\frac{X}{Q}}}$$

Table K-2 gives the R values used in this calculation.

Table K-2: R (cm) values by release pathway and X/Q time period

Time period (hrs)		0- 0.667	0.667-2.667	2.667-8	8-24	24-96	96-720
R (cm)	Stack	7.13E+03	5.31E+03	7.13E+03	1.22E+04	1.34E+04	1.57E+04
	Temp	4.95E+03	3.64E+03	4.95E+03	8.32E+03	9.77E+03	1.14E+04
	MSIV&Perm	3.31E+03	2.49E+03	3.31E+03	5.56E+03	6.05E+03	6.49E+03

Determination of d

The concrete shielding for this case is 8" or 20.32 cm thick. The dose point is assumed to be in the center of the hemisphere of activity directly below the shielding. It is important to acknowledge that the exposure angle determines the thickness of the concrete shielding. This concept is illustrated below in Figure K-2.

Figure K-2: Incident angle as it relates to shielding thickness

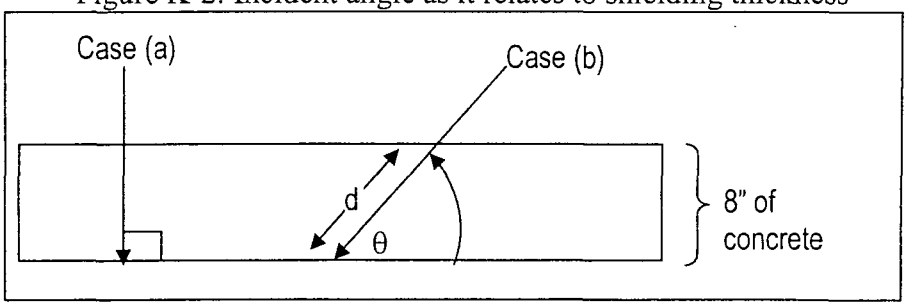

When the incident angle (θ) is normal to the shielding [Case (a)] the dose point is shielded by 8" of concrete. When the incident angle is anything other then 90°, [Case (b)] the shielding increases as a function of angle. The new shielding thickness (d, in inches) is calculated using the equation:

$$d = \frac{8}{\sin(\theta)}$$

To determine the incident angles to be used, the hemisphere was divided into ten segments of equal

Ref.

volume. The central segment is a spherical sector with a volume 1/10th of the total hemisphere. The next volume outward is a spherical sector with a volume of 2/10 of the total hemisphere MINUS the first volume. The third volume is a spherical sector equal to 3/10 of the hemisphere MINUS volume one and volume two, and so on. Figure K-3 shows a schematic with all applicable variables.

Figure K-3: Hemisphere Volume Analysis as it relates to incident angle of activity

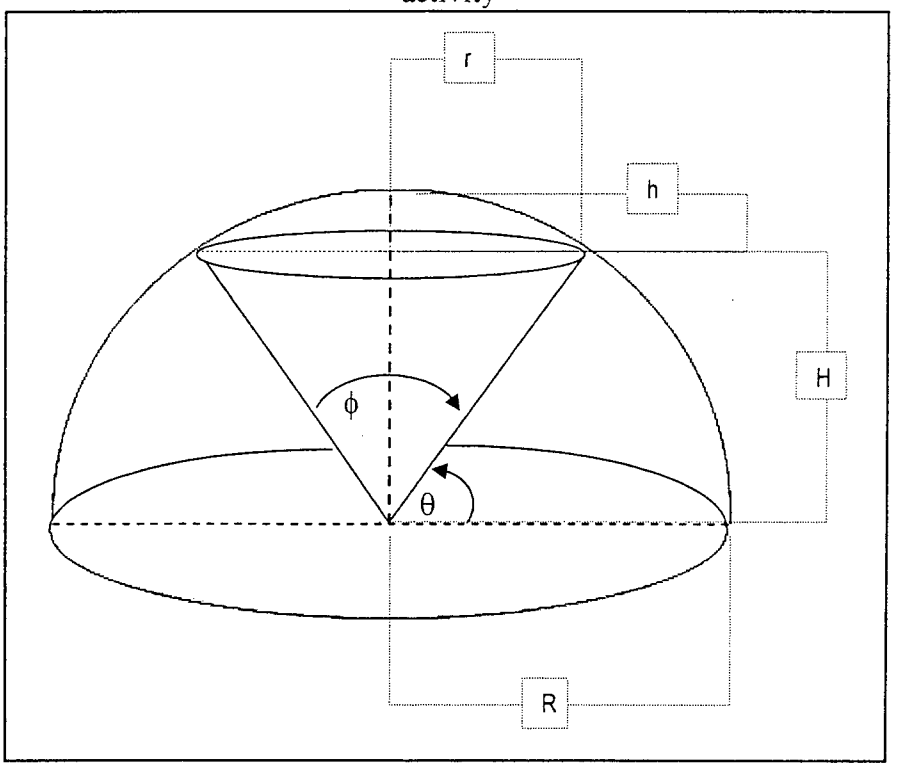

$V_{Hemisphere} = \frac{2}{3}\pi R^3$ and $V_{sector} = \frac{2}{3}\pi R^2 h = \frac{i}{10}\cdot\frac{2}{3}\pi R^3$; simplified: $h = \frac{i}{10}R$

where i= 1..10

Once we have "h", ϕ is found using the equation: $\phi = 2\cos^{-1}\left(\frac{R-h}{R}\right)$

Substituting ϕ into the following equation gives θ in degrees:

$$\theta = 90 - (\tfrac{1}{2}\phi)$$

Recognizing that the values just calculated are the boundary angles for each incremental 10% sector, the average is taken between θ_n and θ_{n-1} to determine the centerline incident angle at which the activity is to

Ref.

the dose point.

Figure K-4: Aerial View

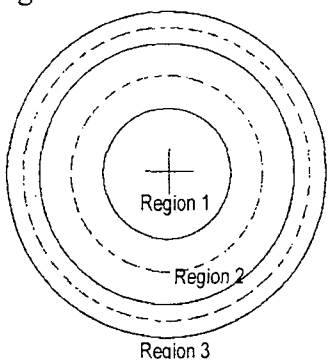

The sketch to the left illustrates an aerial view of the hemispherical region under analysis. For simplicity only inner three regional volumes are shown here, (it should be noted that ten regions were used in the complete analysis). The solid lines depict the radius "r" from Figure K-3. The dashed lines show the radius associated with the incident angle used for each volume. The centerline of Region 1 is taken to be the center point, (Region 1 is a spherical sector, where the subsequent regions are spherical sectors MINUS previous regions, forming a conical void in the center.)

Evaluating for a unit circle (R=1) provides the values found in Table K-3.

Table K-3: Incident angle and perceived shielding thickness values

	Variable	h	ϕ	θ	θ	d
	Description		Segment Angle	Angle from X axis	Centerline	Perceived thickness
	%		degrees	degrees	degrees	cm
Region 1	0	0	0.00	90.00	90.00	20.32
Region 2	0.1	0.1	51.68	64.16	77.08	20.85
Region 3	0.2	0.2	73.74	53.13	58.64	23.80
	0.3	0.3	91.15	44.43	48.78	27.02
	0.4	0.4	106.26	36.87	40.65	31.19
	0.5	0.5	120.00	30.00	33.43	36.88
	0.6	0.6	132.84	23.58	26.79	45.08
	0.7	0.7	145.08	17.46	20.52	57.97
	0.8	0.8	156.93	11.54	14.50	81.17
	0.9	0.9	168.52	5.74	8.64	135.29
	1	1	180.00			

Build Up Factor

The following equation was used to determine build-up factor:

$$B(\mu \cdot d) = A \cdot e^{\alpha_1 \cdot \mu \cdot d} - (A-1)e^{-\alpha_2 \cdot \mu \cdot d}$$

Where:

B Build-up factor (calculated)

μ* Mass attenuation coefficient

A*

Ref.

α_1*	Constants for Taylor exponential representation
α_2*	of
	material buildup factors from Reference K-3
d	Perceived shielding between activity and dose point.

*Material and energy dependent values from Reference K-3

Build up factors are calculated at six energy levels, and for the ten values of "d" calculated above. These factors are then weighted (each "d" value represents 10% of the activity) to determine a total weighted build-up factor for each energy level. These values are found in Table K-4.

Table K-4: Build-up factors by region (incident angle dependent) and energy level.

NRG Level	Region	1	2	3	4	5	6	7	8	9	10
	MeV	10%	20%-10%	30%-20%	40%-30%	50%-40%	60%-50%	70%-60%	80%-70%	90%-80%	100%-90%
1	(0 to 0.3)	20.320	20.848	23.795	27.015	31.194	36.879	45.085	57.974	81.172	135.293
2	(.3 to 0.5)	23.288	24.097	28.872	34.630	43.028	56.340	80.051	130.885	284.094	1334.645
3	(0.5 to 1)	14.803	15.262	17.936	21.077	25.522	32.295	43.729	66.379	126.276	436.806
4	(1 to 1.5)	7.549	7.745	8.866	10.144	11.888	14.422	18.432	25.661	42.044	103.951
5	(1.5 to 2)	4.134	4.220	4.702	5.237	5.944	6.929	8.399	10.832	15.611	29.086
6	(2+)	2.955	3.007	3.297	3.617	4.035	4.609	5.451	6.804	9.340	15.826

Flux

The flux of activity or MeV/cm2 is defined by the function:

$$\frac{MeV}{cm^2}\left(\frac{MeV}{cc}, R, B, d, \mu_{concrete}\right) = \frac{1}{2}\cdot\left(\left[\frac{MeV}{cc}\cdot\frac{1-\exp(-\mu_{air}\cdot R)}{\mu_{air}}\right]_{Sum}\right)\cdot\left[B\cdot(\exp(\frac{-\mu_{concrete}}{\rho_{concrete}}\cdot d_{concrete}\cdot\rho_{concrete}))\right]$$

For simplicity the above equation will be simplified to: $\frac{MeV}{cm^2} = a\cdot b$, where:

$$a = \frac{1}{2}\cdot\left(\left[\frac{MeV}{cc}\cdot\frac{1-\exp(-\mu_{air}\cdot R)}{\mu_{air}}\right]_{Sum}\right) \quad \text{and} \quad b = \left[B\cdot(\exp(\frac{-\mu_{concrete}}{\rho_{concrete}}\cdot d_{concrete}\cdot\rho_{concrete}))\right]$$

The "a" Term:

The 'Sum' subscript refers to the fact that the "a" term must be calculated separately for each of the three X/Q sets used, (Case 1Ax: MSIV & Permanent Bypass, Case 1Ay: Temporary Bypass and Case 1Az: Stack exhaust) and then summed. This is because MeV/cc values as well as the hemispherical radii (R) are X/Q dependent. The multiplier of ½ refers to the fact that we are dealing with a hemisphere. μ_{air} is equal to $7.788E^{-05}$ cm [Ref K-4].

Ref.

Table K-5: Sum of "a" terms for each pathway by time step

MeV / t (hrs)	0- 0.667	0.667-2.667	2.667-8	8-24	24-96	96-720
0.2	8.16E+06	4.94E+08	9.60E+08	8.50E+08	1.21E+09	1.38E+09
0.4	6.18E+06	1.05E+08	7.14E+07	1.40E+07	1.73E+07	2.29E+07
0.75	4.64E+07	3.82E+08	2.96E+08	7.09E+07	3.93E+07	8.12E+06
1.25	1.94E+07	1.73E+08	1.23E+08	1.59E+07	2.38E+06	8.96E+04
1.75	1.89E+07	5.03E+08	4.94E+08	5.83E+07	1.10E+06	4.34E+02
2.5	2.74E+07	1.22E+09	1.22E+09	1.39E+08	1.55E+06	5.84E+02

The "b" Term:

Since the build-up factor (B) varies with the change in the perceived concrete thickness (d), the "b" term is calculated separately for each of the ten regional volumes analyzed. $\rho_{concrete}$ is equal to 2.35 g/cm^3 [Ref K-4]. Since each volume represents 10% of the total activity, a weighted average can be determined for each energy level. These weighted "b" terms can be found in Table K-6.

Table K-6: Weighted "b" terms

MeV	MeV	Average
(0 to 0.3)	0.2	0.0164
(0.3 to 0.5)	0.4	0.0468
(0.5 to 1)	0.75	0.0785
(1 to 1.5)	1.25	0.1048
(1.5 to 2)	1.75	0.1207
(2+)	2.5	0.1482

Multiplying the "a" term to the weighted "b" term gives MeV/cm^2 values by energy level and time step as seen in the following table.

Table K-7: MeV/cm2 values by time step and energy level

MeV / t (hrs)	0- 0.667	0.667-2.667	2.667-8	8-24	24-96	96-720
0.2	1.34E+05	8.09E+06	1.57E+07	1.39E+07	1.98E+07	2.25E+07
0.4	2.89E+05	4.92E+06	3.34E+06	6.53E+05	8.09E+05	1.07E+06
0.75	3.65E+06	3.00E+07	2.32E+07	5.57E+06	3.08E+06	6.37E+05
1.25	2.03E+06	1.81E+07	1.29E+07	1.67E+06	2.50E+05	9.39E+03
1.75	2.28E+06	6.07E+07	5.96E+07	7.04E+06	1.33E+05	5.24E+01
2.5	4.06E+06	1.81E+08	1.81E+08	2.05E+07	2.30E+05	8.65E+01

Using the following equation based on a curve fit of [Ref K-4] data (page 28 of Attachment 1 to [Ref K-2]:

Ref.

$$Dose(rem) = \left(5.489E^{-10} - 1.472E^{-10} \cdot \ln(MeV)\right) \cdot \frac{MeV}{cm^2}$$

Where MeV/cm2 is the flux calculated in Table K-7 and MeV is the appropriate midline MeV value in the energy range. At this point of the calculation an occupancy factor (OF) of 0-1day: 100%, 1-4 days: 60%, and 4-30 days: 40% [Ref K-2] is taken into account. The appropriate OF is multiplied by its corresponding time step. The results are summed to provide a total plume shine dose as can be seen in Table K-8.

Summary

Table K-8: Summary of plume shine dose comparison (rem)

MeV	Appendix I*	Appendix K*
0.2		6.30E-02
0.4		7.57E-03
0.75		3.91E-02
1.25		1.81E-02
1.75		6.05E-02
2.5		1.60E-01
Total		3.48E-01
Total*	2.60E-01	3.30E-01

These results show good agreement between the methods. Consequently, the QAD results of Appendix I are considered acceptable. It may be noted that Appendix I used a wind speed of 2.5 mph (1.12 m/sec) as compared to the more conservative one meter per second assumed herein. The cross-sectional area of the plume varies inversely with the wind speed, and the volume of the source varies with the cross-sectional area to the 3/2 power, so a wind speed that is 89% of the wind speed assumed in Appendix I would be expected to produce a dose approximately 20% greater. The observed difference is 27%.

References

K-1 "QADMOD-GP: Point Kernel Gamma-Ray Shielding Code With Geometric Progression Buildup Factors", RSIC Code Package CCC-565

K-2 4026CF.QA.03, "Design Data Base for Application of the Alternative DBA Source Term to Nine Mile Point Unit 1" Revision 0

K-3 Ingersoll, D. T., "User's Manual for PUTZ, a Point-Kernel Photon Shielding Code", ORNL/TM-9803

K-4 Niagara Mohawk Calc No. H21C043 (Attachment 1 to [Ref K-2])

Ref.

Appendix L Control Room Shine Dose due to Filters (5 pages)

Background

The control room shine dose due to filters in the pre-AST licensing basis is small (2.51E-3 rem per the Design Input Summary of the main body of the calculation). It is based on a time-integrated iodine filter loading as follows (also from the Design Input Summary of the main body of the calculation):

Iodine Isotope	Integrated Activity (Ci-sec)
I131	7.31E4
I132	9.34E2
I133	1.34E4
I134	3.04E2
I135	3.98E3

Loadings have also been calculated for the AST (from Appendix E):

Hours >	4.17E-01	6.67E-01	9.17E-01	1.17E+00	1.42E+00	1.67E+00	1.92E+00	2.03E+00	2.17E+00	2.42E+00	2.67E+00
Kr83m	0.00E+00	0.00E+00	0.00E+00	0.00E+00	0.00E+00	0.00E+00	0.00E+00	0.00E+00	0.00E+00	0.00E+00	0.00E+00
Kr85m	0.00E+00	0.00E+00	0.00E+00	0.00E+00	0.00E+00	0.00E+00	0.00E+00	0.00E+00	0.00E+00	0.00E+00	0.00E+00
Kr85	0.00E+00	0.00E+00	0.00E+00	0.00E+00	0.00E+00	0.00E+00	0.00E+00	0.00E+00	0.00E+00	0.00E+00	0.00E+00
Kr87	0.00E+00	0.00E+00	0.00E+00	0.00E+00	0.00E+00	0.00E+00	0.00E+00	0.00E+00	0.00E+00	0.00E+00	0.00E+00
Kr88	0.00E+00	0.00E+00	0.00E+00	0.00E+00	0.00E+00	0.00E+00	0.00E+00	0.00E+00	0.00E+00	0.00E+00	0.00E+00
Kr89	0.00E+00	0.00E+00	0.00E+00	0.00E+00	0.00E+00	0.00E+00	0.00E+00	0.00E+00	0.00E+00	0.00E+00	0.00E+00
Xe131m	0.00E+00	0.00E+00	0.00E+00	0.00E+00	0.00E+00	0.00E+00	0.00E+00	0.00E+00	0.00E+00	0.00E+00	0.00E+00
Xe133m	0.00E+00	0.00E+00	0.00E+00	0.00E+00	0.00E+00	0.00E+00	0.00E+00	0.00E+00	0.00E+00	0.00E+00	0.00E+00
Xe133	2.95E-05	9.22E-05	2.20E-04	4.45E-04	7.72E-04	1.20E-03	1.73E-03	2.01E-03	2.36E-03	3.07E-03	3.82E-03
Xe135m	0.00E+00	0.00E+00	0.00E+00	0.00E+00	0.00E+00	0.00E+00	0.00E+00	0.00E+00	0.00E+00	0.00E+00	0.00E+00
Xe135	3.72E-04	1.14E-03	2.68E-03	5.32E-03	9.05E-03	1.38E-02	1.96E-02	2.26E-02	2.63E-02	3.35E-02	4.10E-02
Xe137	0.00E+00	0.00E+00	0.00E+00	0.00E+00	0.00E+00	0.00E+00	0.00E+00	0.00E+00	0.00E+00	0.00E+00	0.00E+00
Xe138	0.00E+00	0.00E+00	0.00E+00	0.00E+00	0.00E+00	0.00E+00	0.00E+00	0.00E+00	0.00E+00	0.00E+00	0.00E+00
I131Org	6.83E-04	1.67E-03	3.63E-03	5.59E-03	7.76E-03	1.05E-02	1.37E-02	1.54E-02	1.71E-02	2.02E-02	2.34E-02
I132Org	8.73E-04	1.99E-03	4.00E-03	5.71E-03	7.36E-03	9.22E-03	1.12E-02	1.22E-02	1.30E-02	1.42E-02	1.53E-02
I133Org	1.37E-03	3.34E-03	7.19E-03	1.10E-02	1.51E-02	2.03E-02	2.64E-02	2.95E-02	3.26E-02	3.83E-02	4.39E-02
I134Org	1.09E-03	2.20E-03	3.92E-03	4.96E-03	5.65E-03	6.26E-03	6.74E-03	6.91E-03	6.89E-03	6.69E-03	6.35E-03
I135Org	1.25E-03	2.98E-03	6.30E-03	9.46E-03	1.28E-02	1.68E-02	2.15E-02	2.39E-02	2.61E-02	3.02E-02	3.40E-02
I131Elem	1.90E-02	4.45E-02	8.49E-02	1.13E-01	1.36E-01	1.64E-01	1.97E-01	2.14E-01	2.25E-01	2.47E-01	2.67E-01
I132Elem	2.43E-02	5.28E-02	9.42E-02	1.18E-01	1.33E-01	1.51E-01	1.71E-01	1.81E-01	1.86E-01	1.93E-01	1.99E-01
I133Elem	3.83E-02	8.87E-02	1.68E-01	2.22E-01	2.65E-01	3.17E-01	3.78E-01	4.09E-01	4.30E-01	4.66E-01	5.02E-01
I134Elem	3.05E-02	5.85E-02	9.17E-02	1.00E-01	9.91E-02	9.80E-02	9.66E-02	9.57E-02	9.09E-02	8.16E-02	7.26E-02
I135Elem	3.48E-02	7.92E-02	1.47E-01	1.91E-01	2.24E-01	2.64E-01	3.09E-01	3.31E-01	3.45E-01	3.68E-01	3.88E-01
I131Part	1.62E-02	3.04E-02	6.41E-02	1.02E-01	1.41E-01	1.80E-01	2.20E-01	2.39E-01	2.59E-01	2.83E-01	2.96E-01

Project: Nine Mile Point Nuclear Station Unit: __1_ Disposition: ____

Originator/Date	Reviewer/Date	Calculation No.	Revision
J. Metcalf 12/12/06	D. Leaver 12/12/06	H21C092	00

Ref.

I132Part	2.07E-02	3.60E-02	7.06E-02	1.04E-01	1.34E-01	1.59E-01	1.80E-01	1.89E-01	1.97E-01	1.99E-01	1.94E-01
I133Part	3.25E-02	6.05E-02	1.27E-01	2.01E-01	2.75E-01	3.49E-01	4.23E-01	4.58E-01	4.94E-01	5.35E-01	5.56E-01
I134Part	2.59E-02	3.99E-02	6.93E-02	9.07E-02	1.03E-01	1.08E-01	1.08E-01	1.07E-01	1.05E-01	9.35E-02	8.04E-02
I135Part	2.95E-02	5.40E-02	1.11E-01	1.73E-01	2.33E-01	2.90E-01	3.46E-01	3.71E-01	3.96E-01	4.21E-01	4.30E-01
Rb86	4.58E-05	8.25E-05	1.59E-04	2.46E-04	3.34E-04	4.24E-04	5.15E-04	5.58E-04	6.04E-04	6.57E-04	6.88E-04
Cs134	4.59E-03	8.25E-03	1.60E-02	2.46E-02	3.35E-02	4.25E-02	5.16E-02	5.60E-02	6.06E-02	6.60E-02	6.91E-02
Cs136	1.43E-03	2.58E-03	4.98E-03	7.69E-03	1.04E-02	1.32E-02	1.61E-02	1.74E-02	1.89E-02	2.05E-02	2.15E-02
Cs137	2.74E-03	4.93E-03	9.52E-03	1.47E-02	2.00E-02	2.54E-02	3.08E-02	3.34E-02	3.61E-02	3.94E-02	4.12E-02
Sb127	0.00E+00	1.45E-04	9.00E-04	1.76E-03	2.63E-03	3.52E-03	4.41E-03	4.84E-03	5.29E-03	5.81E-03	6.10E-03
Sb129	0.00E+00	3.89E-04	2.32E-03	4.35E-03	6.27E-03	8.07E-03	9.75E-03	1.05E-02	1.12E-02	1.19E-02	1.20E-02
Te127m	0.00E+00	1.97E-05	1.22E-04	2.39E-04	3.58E-04	4.79E-04	6.02E-04	6.61E-04	7.23E-04	7.95E-04	8.36E-04
Te127	0.00E+00	1.40E-04	8.57E-04	1.66E-03	2.47E-03	3.28E-03	4.09E-03	4.47E-03	4.88E-03	5.35E-03	5.63E-03
Te129m	0.00E+00	6.31E-05	3.91E-04	7.65E-04	1.15E-03	1.54E-03	1.93E-03	2.12E-03	2.32E-03	2.55E-03	2.68E-03
Te129	0.00E+00	3.04E-04	1.78E-03	3.32E-03	4.79E-03	6.18E-03	7.51E-03	8.11E-03	8.79E-03	9.77E-03	1.04E-02
Te131m	0.00E+00	1.90E-04	1.17E-03	2.28E-03	3.40E-03	4.52E-03	5.65E-03	6.18E-03	6.75E-03	7.38E-03	7.71E-03
Te132	0.00E+00	1.86E-03	1.15E-02	2.24E-02	3.36E-02	4.49E-02	5.63E-02	6.17E-02	6.75E-02	7.40E-02	7.77E-02
Ba137m	2.46E-03	4.61E-03	8.89E-03	1.40E-02	1.93E-02	2.47E-02	3.02E-02	3.27E-02	3.59E-02	3.94E-02	4.12E-02
Ba139	0.00E+00	6.84E-04	3.74E-03	6.45E-03	8.53E-03	1.01E-02	1.12E-02	1.15E-02	1.18E-02	1.15E-02	1.06E-02
Ba140	0.00E+00	9.21E-04	5.71E-03	1.12E-02	1.67E-02	2.24E-02	2.81E-02	3.08E-02	3.37E-02	3.71E-02	3.90E-02
Mo99	0.00E+00	1.25E-04	7.74E-04	1.51E-03	2.26E-03	3.02E-03	3.79E-03	4.15E-03	4.53E-03	4.97E-03	5.21E-03
Tc99m	0.00E+00	1.03E-04	6.33E-04	1.22E-03	1.82E-03	2.41E-03	3.00E-03	3.28E-03	3.57E-03	3.94E-03	4.16E-03
Ru103	0.00E+00	1.05E-04	6.53E-04	1.28E-03	1.92E-03	2.57E-03	3.23E-03	3.54E-03	3.87E-03	4.26E-03	4.48E-03
Ru105	0.00E+00	6.67E-05	3.98E-04	7.48E-04	1.08E-03	1.39E-03	1.68E-03	1.81E-03	1.94E-03	2.05E-03	2.07E-03
Ru106	0.00E+00	4.33E-05	2.68E-04	5.25E-04	7.87E-04	1.05E-03	1.33E-03	1.45E-03	1.59E-03	1.75E-03	1.84E-03
Rh105	0.00E+00	6.90E-05	4.27E-04	8.32E-04	1.25E-03	1.66E-03	2.08E-03	2.28E-03	2.49E-03	2.74E-03	2.87E-03
Y90	0.00E+00	6.68E-07	4.60E-06	9.97E-06	1.64E-05	2.40E-05	3.27E-05	3.72E-05	4.26E-05	5.21E-05	6.11E-05
Y91	0.00E+00	6.11E-06	3.80E-05	7.48E-05	1.13E-04	1.52E-04	1.92E-04	2.11E-04	2.32E-04	2.57E-04	2.72E-04
Y92	0.00E+00	1.44E-05	1.57E-04	4.35E-04	8.26E-04	1.31E-03	1.88E-03	2.16E-03	2.51E-03	3.20E-03	3.84E-03
Y93	0.00E+00	7.24E-06	4.41E-05	8.48E-05	1.25E-04	1.65E-04	2.03E-04	2.21E-04	2.40E-04	2.60E-04	2.68E-04
Zr95	0.00E+00	8.53E-06	5.29E-05	1.03E-04	1.55E-04	2.08E-04	2.61E-04	2.87E-04	3.14E-04	3.45E-04	3.63E-04
Zr97	0.00E+00	8.40E-06	5.15E-05	9.98E-05	1.48E-04	1.96E-04	2.44E-04	2.67E-04	2.90E-04	3.16E-04	3.29E-04
Nb95	0.00E+00	8.57E-06	5.31E-05	1.04E-04	1.56E-04	2.09E-04	2.62E-04	2.88E-04	3.15E-04	3.46E-04	3.64E-04
La140	0.00E+00	1.09E-05	7.87E-05	1.77E-04	3.00E-04	4.50E-04	6.25E-04	7.16E-04	8.28E-04	1.03E-03	1.24E-03
La141	0.00E+00	7.57E-06	4.49E-05	8.41E-05	1.21E-04	1.55E-04	1.86E-04	2.00E-04	2.14E-04	2.25E-04	2.26E-04
La142	0.00E+00	6.08E-06	3.37E-05	5.89E-05	7.89E-05	9.45E-05	1.06E-04	1.11E-04	1.14E-04	1.12E-04	1.05E-04
Pr143	0.00E+00	7.59E-06	4.71E-05	9.21E-05	1.38E-04	1.85E-04	2.33E-04	2.55E-04	2.79E-04	3.07E-04	3.23E-04
Nd147	0.00E+00	3.44E-06	2.13E-05	4.16E-05	6.24E-05	8.36E-05	1.05E-04	1.15E-04	1.26E-04	1.38E-04	1.45E-04
Am241	0.00E+00	1.43E-09	8.87E-09	1.74E-08	2.60E-08	3.49E-08	4.38E-08	4.81E-08	5.26E-08	5.79E-08	6.09E-08
Cm242	0.00E+00	3.54E-07	2.19E-06	4.29E-06	6.44E-06	8.62E-06	1.08E-05	1.19E-05	1.30E-05	1.43E-05	1.50E-05
Cm244	0.00E+00	2.35E-08	1.46E-07	2.85E-07	4.28E-07	5.73E-07	7.21E-07	7.91E-07	8.66E-07	9.52E-07	1.00E-06
Ce141	0.00E+00	2.17E-05	1.35E-04	2.63E-04	3.95E-04	5.28E-04	6.64E-04	7.29E-04	7.97E-04	8.77E-04	9.22E-04
Ce143	0.00E+00	1.97E-05	1.21E-04	2.36E-04	3.53E-04	4.70E-04	5.87E-04	6.43E-04	7.02E-04	7.68E-04	8.03E-04
Ce144	0.00E+00	1.80E-05	1.11E-04	2.18E-04	3.27E-04	4.38E-04	5.50E-04	6.04E-04	6.61E-04	7.27E-04	7.64E-04
Np239	0.00E+00	2.78E-04	1.72E-03	3.36E-03	5.02E-03	6.70E-03	8.40E-03	9.20E-03	1.01E-02	1.10E-02	1.16E-02
Pu238	0.00E+00	7.04E-08	4.37E-07	8.54E-07	1.28E-06	1.72E-06	2.16E-06	2.37E-06	2.59E-06	2.85E-06	3.00E-06

Project: Nine Mile Point Nuclear Station Unit: __1_ Disposition: ____

Originator/Date	Reviewer/Date	Calculation No.	Revision
J. Metcalf 12/12/06	D. Leaver 12/12/06	H21C092	00

Ref.

Pu239	0.00E+00	6.51E-09	4.04E-08	7.89E-08	1.18E-07	1.59E-07	1.99E-07	2.19E-07	2.39E-07	2.63E-07	2.77E-07
Pu240	0.00E+00	9.18E-09	5.69E-08	1.11E-07	1.67E-07	2.24E-07	2.81E-07	3.09E-07	3.38E-07	3.71E-07	3.90E-07
Pu241	0.00E+00	2.67E-06	1.65E-05	3.23E-05	4.85E-05	6.50E-05	8.17E-05	8.96E-05	9.81E-05	1.08E-04	1.13E-04
Sr89	0.00E+00	4.79E-04	2.97E-03	5.81E-03	8.72E-03	1.17E-02	1.47E-02	1.61E-02	1.76E-02	1.94E-02	2.04E-02
Sr90	0.00E+00	6.15E-05	3.81E-04	7.45E-04	1.12E-03	1.50E-03	1.88E-03	2.07E-03	2.26E-03	2.49E-03	2.61E-03
Sr91	0.00E+00	5.78E-04	3.52E-03	6.76E-03	9.96E-03	1.31E-02	1.62E-02	1.76E-02	1.90E-02	2.06E-02	2.12E-02
Sr92	0.00E+00	5.58E-04	3.25E-03	5.96E-03	8.38E-03	1.05E-02	1.24E-02	1.32E-02	1.40E-02	1.44E-02	1.42E-02
Hours >	**2.92E+00**	**3.17E+00**	**3.67E+00**	**4.17E+00**	**6.00E+00**	**8.03E+00**	**2.40E+01**	**4.80E+01**	**9.60E+01**	**2.40E+02**	**7.20E+02**
Kr83m	0.00E+00	0.00E+00	0.00E+00	0.00E+00	0.00E+00	0.00E+00	0.00E+00	0.00E+00	0.00E+00	0.00E+00	0.00E+00
Kr85m	0.00E+00	0.00E+00	0.00E+00	0.00E+00	0.00E+00	0.00E+00	0.00E+00	0.00E+00	0.00E+00	0.00E+00	0.00E+00
Kr85	0.00E+00	0.00E+00	0.00E+00	0.00E+00	0.00E+00	0.00E+00	0.00E+00	0.00E+00	0.00E+00	0.00E+00	0.00E+00
Kr87	0.00E+00	0.00E+00	0.00E+00	0.00E+00	0.00E+00	0.00E+00	0.00E+00	0.00E+00	0.00E+00	0.00E+00	0.00E+00
Kr88	0.00E+00	0.00E+00	0.00E+00	0.00E+00	0.00E+00	0.00E+00	0.00E+00	0.00E+00	0.00E+00	0.00E+00	0.00E+00
Kr89	0.00E+00	0.00E+00	0.00E+00	0.00E+00	0.00E+00	0.00E+00	0.00E+00	0.00E+00	0.00E+00	0.00E+00	0.00E+00
Xe131m	0.00E+00	0.00E+00	0.00E+00	0.00E+00	0.00E+00	0.00E+00	0.00E+00	0.00E+00	0.00E+00	0.00E+00	0.00E+00
Xe133m	0.00E+00	0.00E+00	0.00E+00	0.00E+00	0.00E+00	0.00E+00	0.00E+00	0.00E+00	0.00E+00	0.00E+00	0.00E+00
Xe133	4.58E-03	5.35E-03	6.88E-03	8.41E-03	1.39E-02	1.97E-02	5.20E-02	7.15E-02	7.04E-02	3.43E-02	2.44E-03
Xe135m	0.00E+00	0.00E+00	0.00E+00	0.00E+00	0.00E+00	0.00E+00	0.00E+00	0.00E+00	0.00E+00	0.00E+00	0.00E+00
Xe135	4.83E-02	5.54E-02	6.88E-02	8.11E-02	1.18E-01	1.44E-01	1.22E-01	3.06E-02	1.00E-03	1.81E-08	2.23E-24
Xe137	0.00E+00	0.00E+00	0.00E+00	0.00E+00	0.00E+00	0.00E+00	0.00E+00	0.00E+00	0.00E+00	0.00E+00	0.00E+00
Xe138	0.00E+00	0.00E+00	0.00E+00	0.00E+00	0.00E+00	0.00E+00	0.00E+00	0.00E+00	0.00E+00	0.00E+00	0.00E+00
I131Org	2.51E-02	2.69E-02	3.04E-02	3.40E-02	4.58E-02	5.01E-02	6.34E-02	7.17E-02	8.29E-02	7.89E-02	2.75E-02
I132Org	1.52E-02	1.51E-02	1.48E-02	1.42E-02	1.11E-02	6.63E-03	7.23E-05	6.45E-08	4.64E-14	1.07E-32	3.21E-95
I133Org	4.68E-02	4.97E-02	5.54E-02	6.10E-02	7.79E-02	8.02E-02	6.31E-02	3.50E-02	9.70E-03	1.27E-04	2.80E-11
I134Org	5.61E-03	4.92E-03	3.76E-03	2.83E-03	8.99E-04	1.98E-04	8.55E-10	5.86E-18	2.50E-34	1.18E-83	0.00E+00
I135Org	3.56E-02	3.71E-02	3.99E-02	4.24E-02	4.75E-02	4.23E-02	1.06E-02	1.06E-03	9.56E-06	4.29E-12	1.23E-33
I131Elem	2.78E-01	2.89E-01	3.11E-01	3.32E-01	3.63E-01	3.63E-01	3.93E-01	4.51E-01	5.34E-01	4.84E-01	1.41E-01
I132Elem	1.97E-01	1.95E-01	1.91E-01	1.85E-01	1.51E-01	1.21E-01	7.50E-02	6.04E-02	3.95E-02	1.10E-02	1.57E-04
I133Elem	5.18E-01	5.35E-01	5.66E-01	5.96E-01	6.16E-01	5.81E-01	3.91E-01	2.20E-01	6.23E-02	7.80E-04	1.43E-10
I134Elem	6.20E-02	5.29E-02	3.84E-02	2.76E-02	7.11E-03	1.44E-03	5.29E-09	3.68E-17	1.60E-33	7.16E-83	0.00E+00
I135Elem	3.94E-01	3.99E-01	4.08E-01	4.15E-01	3.76E-01	3.07E-01	6.59E-02	6.67E-03	6.14E-05	2.62E-11	6.21E-33
I131Part	3.01E-01	3.04E-01	3.09E-01	3.13E-01	3.21E-01	3.24E-01	3.09E-01	2.83E-01	2.38E-01	1.42E-01	2.53E-02
I132Part	1.82E-01	1.71E-01	1.50E-01	1.31E-01	7.78E-02	4.29E-02	3.52E-04	2.55E-07	1.33E-13	1.91E-32	2.93E-95
I133Part	5.60E-01	5.63E-01	5.64E-01	5.62E-01	5.46E-01	5.19E-01	3.07E-01	1.38E-01	2.79E-02	2.29E-04	2.58E-11
I134Part	6.71E-02	5.57E-02	3.82E-02	2.61E-02	6.30E-03	1.28E-03	4.16E-09	2.31E-17	7.15E-34	2.11E-83	0.00E+00
I135Part	4.26E-01	4.20E-01	4.06E-01	3.91E-01	3.33E-01	2.74E-01	5.18E-02	4.20E-03	2.75E-05	7.72E-12	1.12E-33
Rb86	6.99E-04	7.08E-04	7.20E-04	7.30E-04	7.51E-04	7.62E-04	7.49E-04	7.22E-04	6.70E-04	5.36E-04	2.55E-04
Cs134	7.02E-02	7.11E-02	7.24E-02	7.34E-02	7.57E-02	7.71E-02	7.77E-02	7.76E-02	7.75E-02	7.71E-02	7.57E-02
Cs136	2.18E-02	2.21E-02	2.25E-02	2.28E-02	2.34E-02	2.37E-02	2.31E-02	2.19E-02	1.97E-02	1.43E-02	4.98E-03
Cs137	4.19E-02	4.24E-02	4.32E-02	4.38E-02	4.52E-02	4.60E-02	4.64E-02	4.64E-02	4.64E-02	4.64E-02	4.63E-02
Sb127	6.19E-03	6.26E-03	6.36E-03	6.42E-03	6.53E-03	6.55E-03	5.86E-03	4.89E-03	3.42E-03	1.16E-03	3.19E-05
Sb129	1.17E-02	1.14E-02	1.07E-02	1.00E-02	7.72E-03	5.67E-03	4.40E-04	9.33E-06	4.20E-09	3.82E-19	1.29E-52
Te127m	8.51E-04	8.62E-04	8.78E-04	8.90E-04	9.18E-04	9.34E-04	9.37E-04	9.31E-04	9.20E-04	8.85E-04	7.80E-04
Te127	5.73E-03	5.82E-03	5.94E-03	6.04E-03	6.27E-03	6.42E-03	6.25E-03	5.40E-03	3.80E-03	1.29E-03	3.55E-05
Te129m	2.73E-03	2.76E-03	2.81E-03	2.85E-03	2.94E-03	2.98E-03	2.97E-03	2.91E-03	2.79E-03	2.46E-03	1.63E-03

Ref.

Te129	1.08E-02	1.10E-02	1.12E-02	1.11E-02	9.65E-03	7.48E-03	6.02E-04	1.28E-05	5.74E-09	5.22E-19	1.77E-52
Te131m	7.80E-03	7.86E-03	7.92E-03	7.93E-03	7.84E-03	7.62E-03	5.31E-03	3.05E-03	1.01E-03	3.61E-05	5.48E-10
Te132	7.89E-02	7.97E-02	8.09E-02	8.16E-02	8.29E-02	8.29E-02	7.25E-02	5.86E-02	3.83E-02	1.07E-02	1.53E-04
Ba137m	4.19E-02	4.24E-02	4.32E-02	4.38E-02	4.52E-02	4.60E-02	4.64E-02	4.64E-02	4.64E-02	4.64E-02	4.63E-02
Ba139	9.52E-03	8.51E-03	6.74E-03	5.31E-03	2.17E-03	7.95E-04	2.56E-07	1.43E-12	4.46E-23	1.35E-54	0.00E+00
Ba140	3.96E-02	4.01E-02	4.09E-02	4.14E-02	4.25E-02	4.31E-02	4.19E-02	3.97E-02	3.56E-02	2.57E-02	8.64E-03
Mo99	5.29E-03	5.35E-03	5.42E-03	5.47E-03	5.53E-03	5.51E-03	4.70E-03	3.65E-03	2.20E-03	4.85E-04	3.12E-06
Tc99m	4.26E-03	4.34E-03	4.48E-03	4.59E-03	4.90E-03	5.11E-03	5.02E-03	4.01E-03	2.43E-03	5.34E-04	3.44E-06
Ru103	4.55E-03	4.61E-03	4.70E-03	4.76E-03	4.91E-03	4.99E-03	4.97E-03	4.88E-03	4.71E-03	4.24E-03	2.98E-03
Ru105	2.03E-03	1.98E-03	1.86E-03	1.75E-03	1.35E-03	1.00E-03	8.35E-05	1.96E-06	1.09E-09	1.84E-19	4.95E-52
Ru106	1.87E-03	1.90E-03	1.93E-03	1.96E-03	2.02E-03	2.06E-03	2.07E-03	2.07E-03	2.06E-03	2.04E-03	1.96E-03
Rh105	2.92E-03	2.95E-03	3.00E-03	3.03E-03	3.07E-03	3.05E-03	2.34E-03	1.47E-03	5.73E-04	3.40E-05	2.76E-09
Y90	6.91E-05	7.70E-05	9.27E-05	1.08E-04	1.66E-04	2.29E-04	6.63E-04	1.19E-03	1.90E-03	2.73E-03	2.94E-03
Y91	2.80E-04	2.86E-04	2.96E-04	3.06E-04	3.33E-04	3.56E-04	4.30E-04	4.53E-04	4.48E-04	4.18E-04	3.30E-04
Y92	4.37E-03	4.85E-03	5.62E-03	6.19E-03	6.99E-03	6.49E-03	6.46E-04	7.44E-06	6.53E-10	3.71E-22	5.55E-63
Y93	2.68E-04	2.67E-04	2.63E-04	2.58E-04	2.34E-04	2.08E-04	6.98E-05	1.34E-05	4.94E-07	2.47E-11	1.15E-25
Zr95	3.69E-04	3.74E-04	3.81E-04	3.86E-04	3.98E-04	4.05E-04	4.05E-04	4.01E-04	3.92E-04	3.67E-04	2.96E-04
Zr97	3.31E-04	3.32E-04	3.32E-04	3.29E-04	3.15E-04	2.95E-04	1.55E-04	5.77E-05	8.05E-06	2.18E-08	6.08E-17
Nb95	3.70E-04	3.75E-04	3.83E-04	3.88E-04	4.00E-04	4.07E-04	4.11E-04	4.10E-04	4.10E-04	4.06E-04	3.81E-04
La140	1.42E-03	1.60E-03	1.97E-03	2.33E-03	3.65E-03	5.07E-03	1.41E-02	2.31E-02	3.11E-02	2.87E-02	9.95E-03
La141	2.20E-04	2.14E-04	1.99E-04	1.85E-04	1.38E-04	9.82E-05	5.92E-06	8.59E-08	1.81E-11	1.68E-22	2.83E-59
La142	9.56E-05	8.65E-05	7.04E-05	5.70E-05	2.58E-05	1.05E-05	8.03E-09	1.64E-13	6.82E-23	4.91E-51	0.00E+00
Pr143	3.29E-04	3.34E-04	3.41E-04	3.46E-04	3.59E-04	3.67E-04	3.81E-04	3.84E-04	3.68E-04	2.81E-04	1.01E-04
Nd147	1.48E-04	1.50E-04	1.52E-04	1.54E-04	1.58E-04	1.60E-04	1.55E-04	1.46E-04	1.28E-04	8.78E-05	2.48E-05
Am241	6.19E-08	6.27E-08	6.40E-08	6.48E-08	6.69E-08	6.81E-08	6.86E-08	6.86E-08	6.86E-08	6.86E-08	6.86E-08
Cm242	1.53E-05	1.55E-05	1.58E-05	1.60E-05	1.65E-05	1.68E-05	1.69E-05	1.68E-05	1.67E-05	1.63E-05	1.49E-05
Cm244	1.02E-06	1.03E-06	1.05E-06	1.07E-06	1.10E-06	1.12E-06	1.13E-06	1.13E-06	1.13E-06	1.13E-06	1.13E-06
Ce141	9.37E-04	9.50E-04	9.67E-04	9.80E-04	1.01E-03	1.03E-03	1.02E-03	9.99E-04	9.57E-04	8.42E-04	5.50E-04
Ce143	8.13E-04	8.19E-04	8.26E-04	8.29E-04	8.22E-04	8.02E-04	5.78E-04	3.50E-04	1.28E-04	6.22E-06	2.62E-10
Ce144	7.77E-04	7.88E-04	8.03E-04	8.14E-04	8.39E-04	8.54E-04	8.60E-04	8.58E-04	8.53E-04	8.41E-04	8.01E-04
Np239	1.17E-02	1.18E-02	1.20E-02	1.21E-02	1.22E-02	1.21E-02	1.00E-02	7.47E-03	4.14E-03	7.07E-04	1.95E-06
Pu238	3.05E-06	3.09E-06	3.15E-06	3.19E-06	3.29E-06	3.35E-06	3.38E-06	3.38E-06	3.38E-06	3.38E-06	3.38E-06
Pu239	2.82E-07	2.85E-07	2.91E-07	2.95E-07	3.04E-07	3.10E-07	3.12E-07	3.12E-07	3.12E-07	3.12E-07	3.12E-07
Pu240	3.97E-07	4.02E-07	4.10E-07	4.16E-07	4.29E-07	4.37E-07	4.40E-07	4.40E-07	4.40E-07	4.40E-07	4.40E-07
Pu241	1.15E-04	1.17E-04	1.19E-04	1.21E-04	1.25E-04	1.27E-04	1.28E-04	1.28E-04	1.28E-04	1.28E-04	1.27E-04
Sr89	2.07E-02	2.10E-02	2.14E-02	2.17E-02	2.23E-02	2.27E-02	2.27E-02	2.24E-02	2.18E-02	2.00E-02	1.52E-02
Sr90	2.66E-03	2.69E-03	2.75E-03	2.78E-03	2.87E-03	2.92E-03	2.95E-03	2.95E-03	2.95E-03	2.95E-03	2.94E-03
Sr91	2.12E-02	2.11E-02	2.07E-02	2.03E-02	1.83E-02	1.61E-02	5.04E-03	8.72E-04	2.61E-05	7.03E-10	4.10E-25
Sr92	1.36E-02	1.29E-02	1.16E-02	1.03E-02	6.67E-03	4.04E-03	6.88E-05	1.49E-07	7.00E-13	7.25E-29	3.78E-82

The noble gases in this list are artificial in that they result from the decay of iodine and would, in reality, be lost from the filter. The non-iodine contribution to shine dose would be expected to be small; in Appendix I, the integrated plume MeV/cc due to iodine was shown to dominate the non-noble gas, non-iodine specific energy. Since the activity on the control room filter is that which is drawn in from the

Ref.

plume, the following energies from Appendix I are instructive with respect to the non-iodine shine dose contribution from the filter:

The MeV/cc summed for all plumes is as follows (from Appendix I):

E1	1.54E+06	3.22E+03[1]	1.06E+03[2]
E2	1.23E+05	1.68E+04[1]	4.58E+02[2]
E3	4.69E+05	1.31E+05[1]	7.54E+03[2]
E4	1.96E+05	6.40E+04[1]	2.72E+03[2]
E5	6.47E+05	2.52E+04[1]	1.73E+02[2]
E6	1.58E+06	3.78E+03[1]	4.43E+01[2]

(1) without noble gas
(2) without noble gas or iodine

Calculation of Shine Dose from the Control Room Filter

Based on the above table, only for the E1 (low energy) group is the non-iodine, non-noble gas a significant contributor, about 1/3. Therefore, for conservatism, a 1.33 factor will be applied to the dose based on the iodine loading comparison.

The time integration of the filter activity loading table for iodine only with the factor of 1.33 applied and occupancy factors considered is as follows:

Iodine Isotope	Integrated Activity (Ci-sec)	Ratio to Basis for 2.52E-3 Rem
I131	7.98E5	11:1
I132	3.60E4	39:1
I133	1.78E5	13:1
I134	2.92E3	10:1
I135	4.97E4	13:1

The greatest ratio of Ci-sec for the pre-AST calculation to the above values is for I132, but it represents only three percent of the total Ci-sec. A more representative value is 13:1. Therefore, the pre-AST Control Room filter shine dose contribution of 2.51E-3 rem will be increased by a factor of 13 to 3.3E-2 rem for application to AST.

Ref.

Appendix M Verification that RBEVS Will Actuate (5 Pages)

MicroShield MS5 (Reference M1) calculations of post-LOCA dose rates at the Reactor Building vent monitors were performed to obtain conservative estimates of the time it takes to reach the detector set point of 5 mr/hour to initiate RBEVS.

1. Geometry.

The reactor building ventilation duct in the vicinity of the radiation monitors is arranged as shown below in Figure 1 (refer to the Design Input Summary in the main body of the calculation).

As shown, the detector is located 4" below a section of 54" ID cast-in-wall sleeve with a 3/8" thick steel wall. The shield box significantly reduces the dose contribution from the sides and bottom. Therefore, only a limited length of the duct above is considered, 30" on either side. This is explained as follows:

Assuming a point on the centerline of the assumed 3" x 3.5" x 3.5" (inside dimension) shield box 1" above the bottom and 1.75" from the edge of the box, a ray from this point intersecting the inner edge of the box will intersect the top and bottom of the source at the horizontal distances calculated below. Other dose points are modeled for a sensitivity assessment of this assumed location.

Using similar triangles, H in Box/V in Box = H in Duct/V in Duct

H in Duct = (H in Box/V in Box) x V in Duct

where: H = horizontal distance, V = vertical distance

Top: HDT in Duct = (1.75/2) x (2+4+3/8+54) = 52.828"

Bottom: HDB in Duct = (1.75/2) x (2+4+3/8) = 5.578"

Average Horizontal Distance in Duct = 29.203" ≈30"

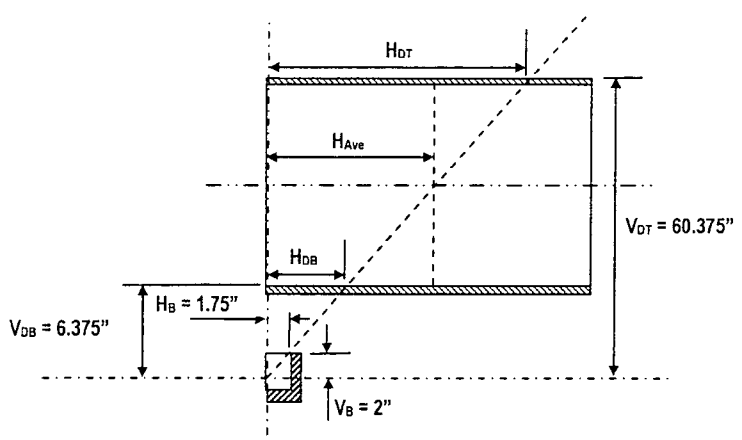

Project: Nine Mile Point Nuclear Station Unit: __1_ Disposition: ____

Originator/Date	Reviewer/Date	Calculation No.	Revision
R. Sher 12/12/06	D. Leaver 12/12/06	H21C092	00

Ref.

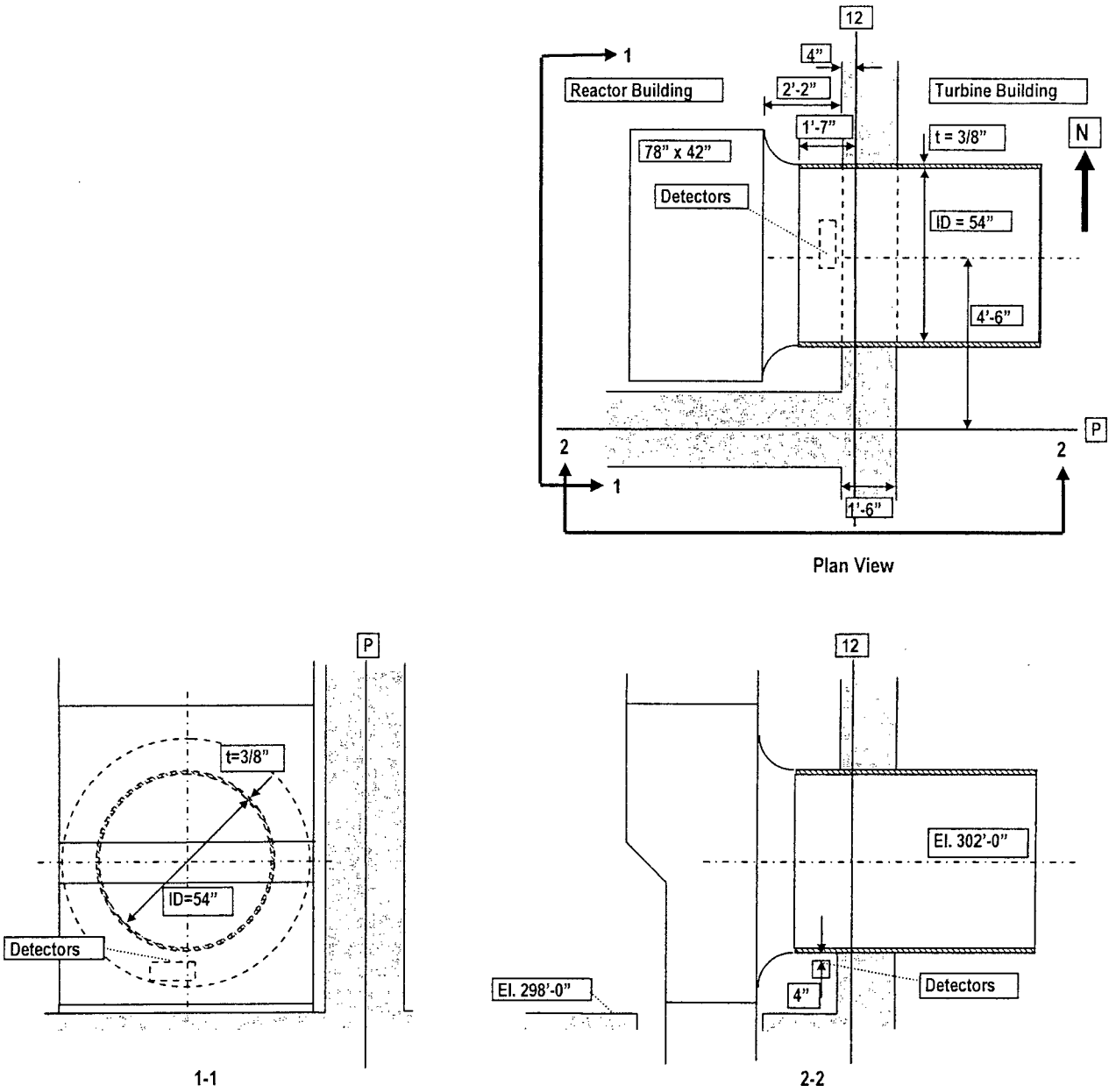

Figure 1. Vent Monitor and Exhaust Duct Geometry.

Ref.

2. MicroShield MS5 model.

The MicroShield MS5 model is as follows:

Geometry Type 7 – Cylindrical Volume with Side Shields

Dimension
Source Dimensions - Note: Half of the source is modeled, and the results doubled.
Height = 30" (the average distance calculated above)
Radius = 27" (54"/2)
Shield thickness = 0.375"
Dose points are located at the top of the box, and 1 and 2 inches down from the top.

	X	Y	Z
DP-1	31.375"	0"	0"
DP-2	32.375"	0"	0"
DP-3	33.375"	0"	0"

Materials

Source	Air	1.22E-3 gm/cc
Transition	Air	1.22E-3 gm/cc
Gap	Air	1.22E-3 gm/cc
Shield	Steel	7.86 gm/cc

Buildup: Wall clad

The source activities are shown in Table 1 taken from Appendix E.

Table 1. Reactor Building Activities and Calculated Concentrations.

t (hr) =	0.04		0.08		0.12		0.16		0.2	
	Ci	µCi/cc	Ci	µCi/cc	Ci	µCi/cc	Ci	µCi/cc	Ci	µCi/cc
Kr83m	9.21E-03	1.53E-07	3.86E-01	6.41E-06	1.23E+00	2.04E-05	2.45E+00	4.07E-05	3.97E+00	6.59E-05
Kr85m	1.94E-02	3.22E-07	8.20E-01	1.36E-05	2.64E+00	4.39E-05	5.31E+00	8.82E-05	8.65E+00	1.44E-04
Kr85	1.12E-03	1.86E-08	4.79E-02	7.96E-07	1.55E-01	2.57E-06	3.13E-01	5.20E-06	5.14E-01	8.54E-06
Kr87	3.64E-02	6.05E-07	1.52E+00	2.52E-05	4.81E+00	7.99E-05	9.50E+00	1.58E-04	1.53E+01	2.54E-04

Ref.

Kr88	5.18E-02	8.60E-07	2.19E+00	3.64E-05	7.02E+00	1.17E-04	1.40E+01	2.33E-04	2.28E+01	3.79E-04
Kr89	3.77E-02	6.26E-07	9.51E-01	1.58E-05	1.83E+00	3.04E-05	2.19E+00	3.64E-05	2.13E+00	3.54E-05
Xe131m	8.69E-04	1.44E-08	3.70E-02	6.15E-07	1.20E-01	1.99E-06	2.42E-01	4.02E-06	3.98E-01	6.61E-06
Xe133m	4.66E-03	7.74E-08	1.98E-01	3.29E-06	6.43E-01	1.07E-05	1.30E+00	2.16E-05	2.13E+00	3.54E-05
Xe133	1.51E-01	2.51E-06	6.42E+00	1.07E-04	2.08E+01	3.46E-04	4.20E+01	6.98E-04	6.90E+01	1.15E-03
Xe135m	2.80E-02	4.65E-07	1.07E+00	1.78E-05	3.11E+00	5.17E-05	5.62E+00	9.34E-05	8.28E+00	1.38E-04
Xe135	5.46E-02	9.07E-07	2.35E+00	3.90E-05	7.68E+00	1.28E-04	1.56E+01	2.59E-04	2.59E+01	4.30E-04
Xe137	8.97E-02	1.49E-06	2.49E+00	4.14E-05	5.28E+00	8.77E-05	6.96E+00	1.16E-04	7.46E+00	1.24E-04
Xe138	1.17E-01	1.94E-06	4.51E+00	7.49E-05	1.32E+01	2.19E-04	2.43E+01	4.04E-04	3.61E+01	6.00E-04
I131	9.40E-02	1.56E-06	2.95E+00	4.90E-05	8.96E+00	1.49E-04	1.67E+01	2.78E-04	2.53E+01	4.20E-04
I132	1.34E-01	2.23E-06	4.15E+00	6.90E-05	1.25E+01	2.08E-04	2.30E+01	3.83E-04	3.44E+01	5.72E-04
I133	1.91E-01	3.18E-06	5.96E+00	9.91E-05	1.81E+01	3.01E-04	3.38E+01	5.61E-04	5.11E+01	8.49E-04
I134	2.03E-01	3.37E-06	6.15E+00	1.02E-04	1.81E+01	3.01E-04	3.28E+01	5.44E-04	4.81E+01	7.98E-04
I135	1.78E-01	2.96E-06	5.56E+00	9.24E-05	1.69E+01	2.80E-04	3.13E+01	5.19E-04	4.71E+01	7.83E-04
Rb86	1.85E-04	3.07E-09	4.97E-03	8.26E-08	1.47E-02	2.44E-07	2.61E-02	4.34E-07	3.71E-02	6.16E-07
Cs134	1.85E-02	3.07E-07	4.98E-01	8.27E-06	1.47E+00	2.44E-05	2.61E+00	4.34E-05	3.71E+00	6.16E-05
Cs136	5.78E-03	9.60E-08	1.56E-01	2.59E-06	4.60E-01	7.64E-06	8.15E-01	1.35E-05	1.16E+00	1.93E-05
Cs137	1.10E-02	1.83E-07	2.97E-01	4.93E-06	8.78E-01	1.46E-05	1.56E+00	2.59E-05	2.21E+00	3.67E-05
Ba137m	7.92E-04	1.32E-08	1.04E-01	1.73E-06	4.59E-01	7.62E-06	9.94E-01	1.65E-05	1.58E+00	2.62E-05

In Table 1, the RB activities in Ci at times 0.04, 0.08, 0.12, 0.16, and 0.20 hours are shown in the columns under the time values, and the corresponding concentrations in μCi/cm^3 are shown in the adjacent columns. For conservatism the RB volume is taken as 6.02E+10 cm^3, twice the value assumed in the Appendix E calculation.

3. Results.

The dose rates (mr/hr) calculated by MS5 are shown in Table 2. These are twice the values in the code output, since only half the source is modeled, as noted above.

Table 2. MS5 calculated dose rates (mr/hr).

t, hours	t, minutes	DP-1	DP-2	DP-3
0.04	2.4	0.04074	0.03832	0.03614
0.08	4.8	1.3006	1.2234	1.1538
0.12	7.2	3.86	3.63	3.424
0.16	9.6	7.078	6.658	6.28
0.2	12	10.574	9.948	9.382

Ref.

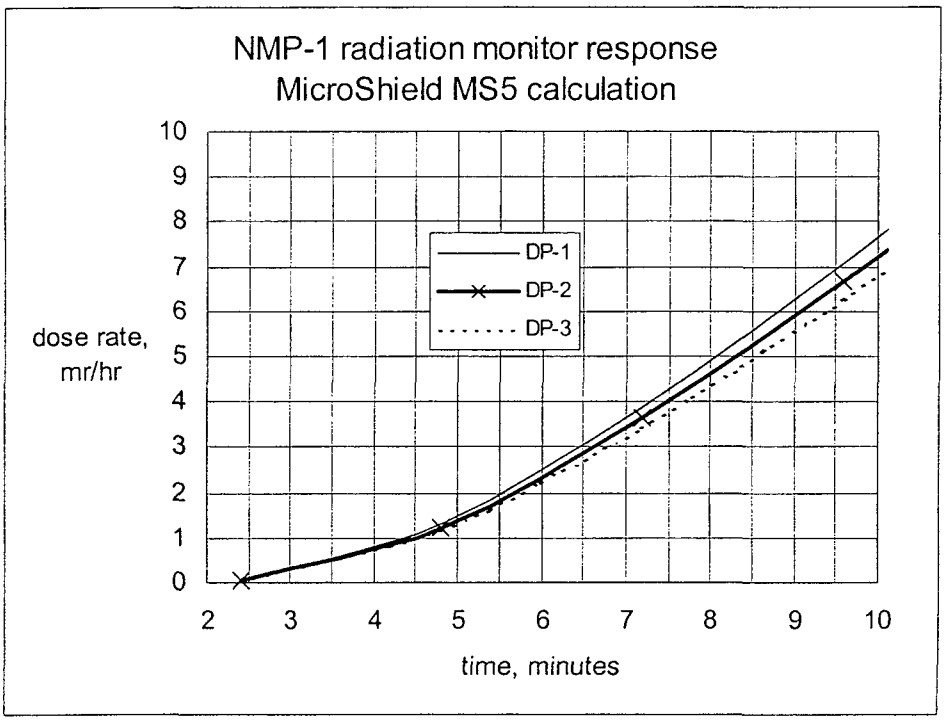

Figure 2. MS5 calculated dose rates.

Figure 2 shows these results graphically. The estimated time to reach the alarm set point of 5 mr/hr is about 8.3 minutes for DP-2, and is slightly different for the other two dose points. Note that the Design Input Summary states that the limiting Case 1A drawdown time is 298 minutes, but 360 minutes (six hours) has been assumed in Appendices D (RADTRAD) and E (STARDOSE). Therefore, there is considerable margin in the assumed start time of the RBEVS and drawdown.

References:

M1 MicroShield, Version 5.0.3, Grove Engineering

Ref.

Appendix N Check Calculation for Appendix M Using QADMOD (10 Pages)

Background

The model is fully described in Appendix M. Using the following disintegration energies from Appendix F (truncated list):

Energy Group	E1	E2	E3	E4	E5	E6
Energy	(0 to 0.3)	(0.3 to 0.5)	(0.5 to 1)	(1 to 1.5)	(1.5 to 2)	(2+)
Kr83m	2.57E-03	0.00E+00	0.00E+00	0.00E+00	0.00E+00	0.00E+00
Kr85m	1.15E-01	4.27E-02	1.20E-04	0.00E+00	0.00E+00	0.00E+00
Kr85	0.00E+00	0.00E+00	2.23E-03	0.00E+00	0.00E+00	0.00E+00
Kr87	2.00E-05	1.99E-01	8.33E-02	2.76E-02	5.79E-02	4.25E-01
Kr88	5.87E-02	1.55E-02	2.66E-01	1.28E-01	6.20E-01	1.50E+00
Kr89	5.03E-02	8.84E-02	3.77E-01	2.84E-01	3.35E-01	7.00E-01
Xe131m	2.01E-02	0.00E+00	0.00E+00	0.00E+00	0.00E+00	0.00E+00
Xe133m	4.15E-02	0.00E+00	0.00E+00	0.00E+00	0.00E+00	0.00E+00
Xe133	4.53E-02	0.00E+00	0.00E+00	0.00E+00	0.00E+00	0.00E+00
Xe135m	4.18E-03	0.00E+00	4.27E-01	0.00E+00	0.00E+00	0.00E+00
Xe135	2.27E-01	2.25E-03	1.90E-02	0.00E+00	0.00E+00	0.00E+00
Xe137	4.50E-04	1.40E-01	7.23E-03	2.36E-02	1.09E-02	5.16E-03
Xe138	1.02E-01	1.24E-01	3.18E-02	6.16E-02	3.44E-01	4.62E-01
I131	2.12E-02	2.97E-01	6.25E-02	0.00E+00	0.00E+00	0.00E+00
I132	7.10E-03	1.37E-02	1.89E+00	3.14E-01	2.80E-02	3.76E-02
I133	1.41E-03	2.71E-03	5.45E-01	5.80E-02	0.00E+00	0.00E+00
I134	1.40E-02	6.84E-02	1.86E+00	3.91E-01	2.72E-01	1.73E-02
I135	1.47E-02	2.27E-02	1.30E-01	9.33E-01	4.20E-01	5.46E-02
Rb86	0.00E+00	0.00E+00	0.00E+00	9.45E-02	0.00E+00	0.00E+00
Cs134	3.50E-04	6.94E-03	1.47E+00	7.29E-02	0.00E+00	0.00E+00
Cs136	9.98E-02	1.67E-01	8.24E-01	1.08E+00	0.00E+00	0.00E+00
Cs137	2.31E-03	0.00E+00	5.63E-01	0.00E+00	0.00E+00	0.00E+00

And the activities at t = 0.12 hours (7.2 minutes) from Appendix M, the following specific gamma power values were developed:

MeV >	0.4 MeV	0.8 MeV	1.3 MeV	1.7 MeV	2.5 MeV
MeV/cc/hr >	3.11E+04	1.70E+05	6.81E+04	4.30E+04	4.66E+04

These are used as input to the QADMOD (Reference N1) check calculation.

QADMOD Run

The duct was modeled as being 30 inches long, 54 inches in diameter, and pi radians (total volume = one-fourth of the actual 79.5 ft^3 (= 2.25E6 cc)). The detector location was established at Z = 0" and R = 33.375". The model is, therefore, a quarter-model with two planes of symmetry (the duct being "cut" in half both ways that it can be cut in half). However, since the full volume is used, there is no need to multiply the result by any factor.

Ref.

The run is presented below:

```
----+----1----+----2----+----3----+----4----+----5----+----6----+----7----+----8
 Unit 1 Plant Vent Monitor
   8    2    0    2    4    5    5   -2    0    6    5   20
                              0    3
 2.25+06
    0.00    11.43    22.86    34.29    47.22    57.15    68.58
     0.0    15.24    30.48    45.72    60.96    76.20
     0.0    0.157    0.314    0.417    0.628    0.785    0.942    1.100
   1.257    1.414    1.571    1.728    1.885    2.042    2.199    2.356
   2.513    2.670    2.827    2.984    3.141
 1     2     0.00     0.00     0.00     0.00     0.00     0.00
 2     2    76.20     0.00     0.00     0.00     0.00     0.00
 3    11     0.00    69.53     0.00    76.20     0.00     0.00
 4    11     0.00    68.58     0.00    76.20     0.00     0.00
 1     1  1                                     0.0     -0.01     0.00
 2     1  2                                     0.0    200.00     0.00
 3     1  1  2  3                              70.0     50.00     0.00
 4     2  1  2  3  4                           69.0     50.00     0.00
 5     1  1  2  4                               0.01    50.00     0.00
 1.225-3
            7.85
  23   11
 3.11+4   1.72+5   6.83+4   4.91+4   0.00+0   4.80+4   0.00+0   0.00+0
 6.84-10  5.83-10  5.10-10  4.69-10  4.32-10  4.13-10  3.67-10  3.01-10
 MEV PER                    REM      CM**2
    84.8      0.0      0.0    0                              DET. 1
                              -1
----+----1----+----2----+----3----+----4----+----5----+----6----+----7----+----8
```

Ref.

```
                    TU ELECTRIC

                COMANCHE PEAK ENGINEERING

                    QADMOD-GP PROGRAM

QADMOD-G CCC-396 (PC VERSION WITH OPTIONAL G-P BU FACTORS)

 Unit 1 Plant Vent Monitor

***** PROGRAM CONTROL *****

NUMBER OF PHOTON ENERGY GROUPS,MAX. 30            =   8
NUMBER OF MATERIALS,MAX. 30                       =   2
NO. OF MATERIALS TO BE READ FROM CARDS            =   0
NUMBER OF COMPOSITIONS,MAX. 100                   =   2
NUMBER OF BOUNDARIES,MAX. 250                     =   4
NUMBER OF ZONES,MAX. 300                          =   5
MOST PROBABLE SOURCE ZONE                         =   5
SOURCE COMPUTATION OPTION                         =  -2
SOURCE GEOMETRY TYPE OPTION                       =   0
NUMBER OF SOURCE POINTS ALONG THE X AXIS,MAX. 30  =   6
NUMBER OF SOURCE POINTS ALONG THE Z AXIS,MAX. 30  =   5
NUMBER OF SOURCE POINTS ALONG THE Y AXIS,MAX. 30  =  20
SUMMARY TABLE PUNCH OPTION, NO=0,YES=1            =   0
DEBUG FLAG FOR PRINTOUT, USUAL PRINT=0, DEBUG=1   =   0
FIRST SOURCE-DETECTOR TRAVERSE FOR GEOMETRY PRINT=    0
LAST SOURCE-DETECTOR TRAVERSE FOR GEOMETRY PRINT  =   0
DEL SOURCE-DETECTOR TRAVERSE FOR GEOMETRY PRINT   =   0
GAMMA RAY REFERENCE MATERIALS                     =   0
CONVERSION OF GAMMA RAY OUTPUT OPTION             =   0
GAMMA FTOD FACTORS,CARD INPUT=0,INTERNAL=NO.      =   0
BUILDUP FACTORS, CARD INPUT=0, INT=1,4, G-P=5     =   3
GAMMA HEAT CONVERSION FACTORS(NO=0,YES=1)         =   0
```

Ref.

```
     SOURCE  2.2500E+06  0.0000E+00  0.0000E+00  0.0000E+00  0.0000E+00  0.0000E+00
0.0000E+00

          R  0.0000E+00  1.1430E+01  2.2860E+01  3.4290E+01  4.7220E+01  5.7150E+01
6.8580E+01

          Z  0.0000E+00  1.5240E+01  3.0480E+01  4.5720E+01  6.0960E+01  7.6200E+01

        PHI  0.0000E+00  1.5700E-01  3.1400E-01  4.1700E-01  6.2800E-01  7.8500E-01  9.4200E-
01

1.1000E+00
             1.2570E+00  1.4140E+00  1.5710E+00  1.7280E+00  1.8850E+00  2.0420E+00
2.1990E+00

2.3560E+00
             2.5130E+00  2.6700E+00  2.8270E+00  2.9840E+00  3.1410E+00

       F(L)  1.0000E+00  1.0000E+00  1.0000E+00  1.0000E+00  1.0000E+00  1.0000E+00
1.0000E+00

       F(M)  1.0000E+00  1.0000E+00  1.0000E+00  1.0000E+00  1.0000E+00  1.0000E+00

       F(N)  1.0000E+00  1.0000E+00  1.0000E+00  1.0000E+00  1.0000E+00  1.0000E+00
1.0000E+00

1.0000E+00
             1.0000E+00  1.0000E+00  1.0000E+00  1.0000E+00  1.0000E+00  1.0000E+00
1.0000E+00

1.0000E+00
             1.0000E+00  1.0000E+00  1.0000E+00  1.0000E+00  1.0000E+00
```

Ref.

```
****GEOMETRY DESCRIPTION***

    BOUNDARY DESCRIPTION

  BOUNDARY                                                ADM(CM)
  NO IND TYPE
   1   0   2  0.0000E+00  0.0000E+00  0.0000E+00  0.0000E+00  0.0000E+00  0.0000E+00
0.0000E+00

   2   0   2  7.6200E+01  0.0000E+00  0.0000E+00  0.0000E+00  0.0000E+00  0.0000E+00
0.0000E+00

   3   0  11  0.0000E+00  6.9530E+01  0.0000E+00  7.6200E+01  0.0000E+00  0.0000E+00
0.0000E+00

   4   0  11  0.0000E+00  6.8580E+01  0.0000E+00  7.6200E+01  0.0000E+00  0.0000E+00
0.0000E+00


    REGION DESCRIPTION

  REG MAT     BOUNDS BY REGION                                POINT IN REGION
  NO  NO                                                   X(CM)       Y(CM)       Z(CM)
   1   1   1   0   0   0   0   0   0   0   0      0.0000E+00 -1.0000E-02  0.0000E+00

   2   1   2   0   0   0   0   0   0   0   0      0.0000E+00  2.0000E+02  0.0000E+00

   3   1   1   2   3   0   0   0   0   0   0      7.0000E+01  5.0000E+01  0.0000E+00

   4   2   1   2   3   4   0   0   0   0   0      6.9000E+01  5.0000E+01  0.0000E+00

   5   1   1   2   4   0   0   0   0   0   0      1.0000E-02  5.0000E+01  0.0000E+00
```

Ref.

```
****MATERIAL DENSITIES****

COMP/MAT        1            2
     1       1.2250E-03  0.0000E+00
     2       0.0000E+00  7.8500E+00


***MATERIAL REFERENCE NUMBERS***

               23           11


***MATERIAL ATTENUATION COEF.***

  GRP/MAT       1            2

                           GAMMA ATTENUATION COEFFICIENT
     1       9.5270E-02  9.2030E-02
     2       7.0680E-02  6.6480E-02
     3       5.6470E-02  5.3060E-02
     4       4.8830E-02  4.6240E-02
     5       4.2730E-02  4.1290E-02
     6       4.0130E-02  3.9370E-02
     7       3.3290E-02  3.4630E-02
     8       2.5000E-02  3.0510E-02
```

Ref.

GRP	SOURCE SPECTRA	CONVERSION FACTORS	B0	B1	B2	B3
1	3.1100E+04	6.8400E-10	1.0000E+00	1.1050E+00	2.9803E-02	3.4759E-03
2	1.7200E+05	5.8300E-10	1.0000E+00	9.9146E-01	3.0062E-02	2.2770E-03
3	6.8300E+04	5.1000E-10	1.0000E+00	8.6912E-01	2.5340E-02	1.2391E-03
4	4.9100E+04	4.6900E-10	1.0000E+00	7.8300E-01	2.0843E-02	6.8625E-04
5	0.0000E+00	4.3200E-10	1.0000E+00	6.8688E-01	1.7023E-02	3.6913E-04
6	4.8000E+04	4.1300E-10	1.0000E+00	6.3554E-01	1.5501E-02	3.2553E-04
7	0.0000E+00	3.6700E-10	1.0000E+00	5.0135E-01	1.1991E-02	2.4142E-04
8	0.0000E+00	3.0100E-10	9.9801E-01	3.1952E-01	1.5655E-02	5.7888E-05

MEAN ENERGY FOR GROUP

4.0000E-01 8.0000E-01 1.3000E+00 1.7000E+00 2.2000E+00 2.5000E+00 3.5000E+00
6.1500E+00

NOTATIONS FOR OUTPUT UNITS :
UNIT G-
MEV PER REM

CM**2

Ref.

```
                                   COORDINATE TYPE 0          SOURCE INTENSITY OPTION 2

       COORDINATE   INTENSITY  COORDINATE   INTENSITY  COORDINATE   INTENSITY  COORDINATE
INTENSITY



     R COORDINATE
    1  5.7150E+00  3.9193E+02  1.7145E+01  1.1758E+03  2.8575E+01  1.9597E+03  4.0755E+01
3.1618E+03
    5  5.2185E+01  3.1092E+03  6.2865E+01  4.3113E+03

   PHI COORDINATE
    1  7.8500E-02  3.1400E-01  2.3550E-01  3.1400E-01  3.6550E-01  2.0600E-01  5.2250E-01
4.2200E-01
    5  7.0650E-01  3.1400E-01  8.6350E-01  3.1400E-01  1.0210E+00  3.1600E-01  1.1785E+00
3.1400E-01
    9  1.3355E+00  3.1400E-01  1.4925E+00  3.1400E-01  1.6495E+00  3.1400E-01  1.8065E+00
3.1400E-01
   13  1.9635E+00  3.1400E-01  2.1205E+00  3.1400E-01  2.2775E+00  3.1400E-01  2.4345E+00
3.1400E-01
   17  2.5915E+00  3.1400E-01  2.7485E+00  3.1400E-01  2.9055E+00  3.1400E-01  3.0625E+00
3.1400E-01

     Z COORDINATE
    1  7.6200E+00  5.0769E+00  2.2860E+01  5.0769E+00  3.8100E+01  5.0769E+00  5.3340E+01
5.0769E+00
    5  6.8580E+01  5.0769E+00
```

Ref.

Unit 1 Plant Vent Monitor

RECEIVER NUMBER 1 DET. 1 COORDINATES - R 8.4800E+01 PHI 0.0000E+00 Z 0.0000E+00

GRP NO	MEAN ENERGY MEV	MEAN BUILDUP FACTORS	ENERGY FLUX DIRECT BEAM MEV PER CM**2	ENERGY FLUX WITH BUILDUP MEV PER CM**2	DOSE RATE DIRECT BEAM REM	DOSE RATE WITH BUILDUP REM
1	.4000	1.8652E+00	3.3829E+05	6.3097E+05	2.3139E-04	4.3159E-04
2	.8000	1.5919E+00	2.3252E+06	3.7014E+06	1.3556E-03	2.1579E-03
3	1.3000	1.4250E+00	1.0406E+06	1.4828E+06	5.3069E-04	7.5623E-04
4	1.7000	1.3380E+00	7.9611E+05	1.0652E+06	3.7337E-04	4.9957E-04
5	2.2000	0.0000E+00	0.0000E+00	0.0000E+00	0.0000E+00	0.0000E+00
6	2.5000	1.2369E+00	8.2962E+05	1.0261E+06	3.4263E-04	4.2380E-04
7	3.5000	0.0000E+00	0.0000E+00	0.0000E+00	0.0000E+00	0.0000E+00
8	6.1500	0.0000E+00	0.0000E+00	0.0000E+00	0.0000E+00	0.0000E+00
TOTAL	.9433		5.3297E+06	7.9065E+06	2.8337E-03	4.2691E-03
WOBU	.9957					

ENERGY FLUX BUILDUP	DOSE BUILDUP
1.4835E+00	1.5066E+00

Project: Nine Mile Point Nuclear Station Unit: __1_ Disposition: ____

Originator/Date	Reviewer/Date	Calculation No.	Revision
J. Metcalf 12/12/06	N/A	H21C092	00

Ref.

```
      Unit 1 Plant Vent Monitor

  RECEIVER   RECEIVER                RECEIVER                          DOSE RATE
   NUMBER      ID                   COORDINATES                          REM

                            R          PHI          Z          DIRECT BEAM     WITH BUILDUP
    1       DET. 1      8.4800E+01  0.0000E+00  0.0000E+00      2.8337E-03      4.2691E-03

  *** END OF JOB ***
Stop - Program terminated.
```

Results

These results show a dose rate at 0.12 hours (7.2 minutes) of 4.27 mr/hr, slightly greater than the MicroShield model. This result indicates that the RBEVS could be actuated even earlier than the estimated 8.3 minutes of Appendix M.

H21C092-00

Attachment 1 Design Verification Report (2 Pages) Page 1-1

Document being design-verified: ☐ DCP ☒ Calc ☐ Spec ☐ NER ☐ DBD ☐ Other

Doc#, Rev and Title: H21C092, Rev. 0: Unit 1 LOCA w/LOOP, AST Methodology

Extent of Design Verification (Briefly describe):

Design verification was accomplished by: (1) accuracy checks of the main body and all appendices, with some appendices serving as checks of other appendices as indicated on the Cover Sheet.; (2) independent design review of the main body and all appendices except those whose purpose is as a check of another appendix (App. E, App. H, App. J, App. K, and App. N). The acc. checks verified all design input and the calc. results, in some cases by design review and in some cases by alternate calcs. The independent design review evaluated the overall methodogy and approach, the scrutability, the completeness, and the reasonableness of the results based on past Polestar work and experience.

Method of Design Verification:

☒ Design Review ☐ Qualification Testing
☒ Alternate Calculations ☐ Applicability of Proven Design

Results of Design Verification:

☒ Fully acceptable with no issues identified
☐ Fully acceptable based on the following issues identified and resolved:

All calculations are acceptable with no issues identified. Comments were provided during the course o of the review, and were resolved prior to the final version of the calc.

☐ Continuation Page Follows

Discipline Involvement and Approvals:

	Name	Signature	Date
Lead Design Verifier:	D. Leaver	D E Leaver	12/12/06

See page 2 for additional signatures for Accuracy Checks

Discipline Design Verifiers, if required:

Discipline	Name	Signature	Date

Calc. Section	Preparer	Checker
Main Body		D.Leaver
Appendix A		D.Leaver
Appendix B		D.Leaver
Appendix C		D.Leaver
Appendix D		Checked by App. E
Appendix E (check for App. D)*	H.Pustulka	J.Metcalf
Appendix F		J.Metcalf
Appendix G		Checked by App. H
Appendix H (check for App. G)	H.Pustulka	N/A
Appendix I		Checked by App. J and K
Appendix J (check for App. I activities)	H.Pustulka	N/A
Appendix K (check for App. I dose)	H.Pustulka	N/A
Appendix L		J.Metcalf
Appendix M		Checked by N
Appendix N (check for App. M)	J.Metcalf	N/A

*A check signature appears for Appendix E (even though App. E itself is a check of App. D) since App. E results are used in other appendices.

H21C092-00

Attachment 2 Design Verification Checklist (1 Page) Page 2-1

The following questions are required to be addressed based on the Nine Mile Point commitment to NQA-1 (1983) for design verification activities. This checklist is intended to assist when using the Design Review method of design verification to ensure relevant items are addressed in the verification effort. Each "No" answer will require correction or resolution by the originator of the document being verified prior to full acceptance by the design verifier(s).

Doc #: H21C092

Lead Design Verifiers Name: D. Leaver

Items Addressed with Basis of Review Answer	Review Check		
	Yes	No	N/A
1. Were the inputs correctly selected ?	X		
2. Are assumptions necessary to perform the design activity adequately described and reasonable ? Where necessary, are the assumptions identified for subsequent re-verifications when the detailed activities are completed ?	X		
3. Was an appropriate design method used?	X		
4. Were the design inputs correctly incorporated into the design ?	X		
5. Is the design output reasonable compared to design inputs ?	X		
6. Are the necessary design input and verification requirements for interfacing organizations specified in the design documents or in supporting procedures or instructions ?			X