Timothy J. O'Connor
Vice President

P.O. Box 63
Lycoming, New York 13093
315.349.5200
315.349.1321 Fax

Constellation Energy
Nine Mile Point Nuclear Station

December 14, 2006

U. S. Nuclear Regulatory Commission
Washington, DC 20555-0001

ATTENTION: Document Control Desk

SUBJECT: Nine Mile Point Nuclear Station
Unit No. 1; Docket No. 50-220

License Amendment Request Pursuant to 10 CFR 50.90:
Application of Alternative Source Term

REFERENCES:

(a) J. J. DiNunno et al., Technical Information Document (TID)-14844, "Calculation of Distance Factors for Power and Test Reactor Sites," U.S. Atomic Energy Commission (now USNRC), 1962

(b) NRC Regulatory Guide 1.183, "Alternative Radiological Source Terms for Evaluating Design Basis Accidents at Nuclear Power Reactors," July 2000

(c) Letter from W. C. Holston (NMPNS) to Document Control Desk (NRC), dated January 31, 2005, Response to Generic Letter 2003-01, Control Room Habitability (TAC Nos. MB9825, MB9826)

(d) Letter from T. J. O'Connor (NMPNS) to Document Control Desk (NRC), dated January 27, 2006, Response to NRC Generic Letter 2003-01, Control Room Habitability – Commitment Completion Date Change (TAC Nos. MB9825 and MB9826)

Pursuant to 10 CFR 50.90, Nine Mile Point Nuclear Station, LLC, (NMPNS) hereby requests an amendment to Nine Mile Point Unit 1 (NMP1) Renewed Operating License DPR-63. The proposed amendment would revise the accident source term in the design basis radiological consequence analyses in accordance with 10 CFR 50.67, which requires that a licensee who seeks to revise its current accident source term apply for a license amendment under 10 CFR 50.90. The proposed accident source term revision replaces the current methodology that is based on TID-14844 (Reference a) with the alternative source term methodology described in Regulatory Guide 1.183 (Reference b). This submittal fulfills the

This letter forwards proprietary information in accordance with 10 CFR 2.390. The balance of this letter may be considered non-proprietary upon removal of Attachment (10).

A001

NMPNS commitment for completing and submitting the analysis needed to meet Generic Letter 2003-01 objectives (References c and d).

This license amendment request is for full implementation of the alternative source term (AST) as described in Reference (b), with the exception that Reference (a) will continue to be used as the radiation dose basis for equipment qualification and vital area access. Proposed changes in the licensing basis for NMP1 resulting from AST application include the following:

- Technical Specification (TS) changes that reflect revised design requirements regarding the use of the Liquid Poison System to buffer the suppression pool preventing iodine re-evolution following a postulated design basis loss of coolant accident.

- Revisions to the TS section concerning reactor coolant activity to reflect the AST analysis of the main steam line break accident, and other updates to the reactor coolant activity TS requirements to more closely reflect the model Standard Technical Specifications (NUREG-1433).

- Revisions to the TS operability requirements for Secondary Containment, Reactor Building Emergency Ventilation System, and Control Room Air Treatment System, consistent with the assumptions contained in the AST Refueling Accident analysis. The AST analysis does not take credit for secondary containment during the movement of irradiated fuel and during core alterations.

NMPNS is also requesting deletion of Renewed Operating License (OL) Condition 2.C.(3). This license condition required NMPNS to submit an application for license amendment, including supporting analyses and evaluations, to demonstrate compliance with General Design Criterion 19 dose guidelines under accident conditions based upon system design and without reliance upon the use of potassium iodide. This license condition is no longer applicable since the AST analyses provided in this submittal demonstrate that the NMP1 control room operator dose exposure for the most limiting design basis accident remains within the acceptance criteria of 10 CFR 50.67 without reliance on the use of potassium iodide.

The description and technical basis of the proposed change are contained in Attachment (1) and the other attachments referenced therein. The proposed OL and TS changes are shown in the markup in Attachment (2). Associated TS Bases changes are shown in Attachment (3). The TS Bases changes are provided for information only and will be processed in accordance with the NMP1 TS Bases Control Program (TS 6.5.6). Attachment (1), Section A1-9, provides a list of regulatory commitments contained in this submittal. Following NRC approval, the NMP1 Updated Final Safety Analysis Report (UFSAR) will be updated to reflect the AST analyses in accordance with 10 CFR 50.71(e) as part of the regular UFSAR update process.

The detailed calculations (non-proprietary versions) that contain input data, assumptions, and analysis methodologies are provided in Attachment (8). One of these calculations is considered by Polestar Applied Technology, Inc. (Polestar) to contain proprietary information exempt from disclosure pursuant to 10 CFR 2.390. Therefore, on behalf Polestar, NMPNS hereby makes application to withhold this calculation from public disclosure in accordance with 10 CFR 2.390(b)(1). An affidavit executed by Polestar detailing the reasons for the request to withhold the proprietary information is provided in Attachment (9). A proprietary version of the calculation is provided in Attachment (10).

NMPNS requests approval of this request in a timely manner, with implementation within 120 days of receipt of the approved amendment. This implementation period will provide adequate time to complete implementation activities using the appropriate change control processes.

Pursuant to 10 CFR 50.91(b)(1), NMPNS has provided a copy of this license amendment request, with attachments, to the appropriate state representative.

Should you have any questions regarding the information in this submittal, please contact M. H. Miller, Licensing Director, at (315) 349-5219.

Very truly yours,

STATE OF NEW YORK :
: **TO WIT:**
COUNTY OF OSWEGO :

I, Timothy J. O'Connor, being duly sworn, state that I am Vice President Nine Mile Point, and that I am duly authorized to execute and file this request on behalf of Nine Mile Point Nuclear Station, LLC. To the best of my knowledge and belief, the statements contained in this document are true and correct. To the extent that these statements are not based on my personal knowledge, they are based upon information provided by other Nine Mile Point employees and/or consultants. Such information has been reviewed in accordance with company practice and I believe it to be reliable.

Subscribed and sworn before me, a Notary Public in and for the State of New York and County of Oswego, this 14th day of December, 2006.

WITNESS my Hand and Notarial Seal:

Notary Public

My Commission Expires: 12/14/06
Date

SANDRA A. OSWALD
Notary Public, State of New York
No. 01OS6032276
Qualified in Oswego County
Commission Expires 10/25/09

TJO/DEV/kms

Attachments:
(1) Technical Basis and No Significant Hazards Determination
(2) Proposed Operating License (OL) and Technical Specification (TS) Changes (Mark-up)
(3) Changes to Technical Specification Bases (Mark-up)
(4) Determination of Reactor Building Positive Pressure Period
(5) Suppression Pool pH Control in the Event of a Design Basis LOCA
(6) Evaluation of LPS Injection Flow Transport and Mixing
(7) Calculation of New Atmospheric Dispersion Factors
(8) Enclosed Calculations for Alternative Source Term (Non-Proprietary Versions)
(9) Affidavit by Polestar Applied Technology, Inc.
(10) Enclosed Calculations for Alternative Source Term (Proprietary Versions)

cc: S. J. Collins, NRC (without Attachments 8 and 10)
T. G. Colburn, NRC
Resident Inspector, NRC (without Attachments 8 and 10)
J. P. Spath, NYSERDA (without Attachments 8 and 10)

ATTACHMENT (1)

TECHNICAL BASIS AND

NO SIGNIFICANT HAZARDS DETERMINATION

TABLE OF CONTENTS

A1-1. DESCRIPTION

The proposed amendment revises the accident source term in design basis radiological consequence analyses for Nine Mile Point Unit 1 (NMP1). The proposed revisions to NMP1 Renewed Operating License DPR-63 are supported by the results of the revised design basis accident (DBA) analyses that have been performed to implement the revised accident source term. This submittal fulfills our commitment in References A1-8.1 and A1-8.2 for completing and submitting the radiological analysis needed to meet Generic Letter 2003-01, "Control Room Habitability" objectives.

This application is submitted, in part, pursuant to Nuclear Regulatory Commission (NRC) regulation 10 CFR 50.67 that states: "A licensee who seeks to revise its current accident source term in design basis radiological consequence analyses shall apply for a license amendment under § 50.90." Section 50.67 further states: "The application shall contain an evaluation of the consequences of applicable design basis accidents previously analyzed in the safety analysis report." Additionally, 10 CFR 50.67 sets new acceptance criteria for radiological consequences based on total effective dose equivalent (TEDE), replacing the traditional whole body and thyroid dose guidelines stated in 10 CFR Part 50, Appendix A, General Design Criterion (GDC) 19 and 10 CFR 100.11. For NMP1, the following four bounding DBAs were re-analyzed for this application:

1. Loss of Coolant Accident (LOCA)
2. Main Steam Line Break (MSLB) accident,
3. Refueling Accident, and
4. Control Rod Drop Accident CRDA).

The proposed accident source term revision follows the guidance in Regulatory Guide (RG) 1.183, "Alternative Radiological Source Terms for Evaluating Design Basis Accidents at Nuclear Power Reactors" (Reference A1-8.3). The accident source term discussed in RG 1.183 is herein referred to as the Alternative Source Term (AST). RG 1.183 permits full or selective implementation of the AST characteristics. This license amendment request is for full implementation of the AST as described in RG 1.183, with the exception that the current methodology of Technical Information Document (TID)-14844, "Calculation of Distance Factors for Power and Test Reactor Sites" (Reference A1-8.4) will continue to be used as the radiation dose basis for equipment qualification and vital area access. Full implementation of the AST is a modification of the facility design basis that addresses all characteristics of the AST; that is, composition and magnitude of the radioactive material, its chemical and physical form, and the timing of its release. Full implementation revises the plant licensing basis to specify the AST in place of the previous accident source term and establishes the TEDE dose as the new acceptance criteria. This applies not only to the analyses performed in the application (which may only include a subset of the plant analyses), but also to all future design basis analyses.

Approval of this proposed change will provide a source term for NMP1 that will result in a more accurate assessment of the DBA radiological doses. The improved dose assessment results in revisions to some current licensing basis requirements. The proposed changes to the Renewed Operating License (OL) and the Technical Specifications (TS) are described in the following section.

A1-2. PROPOSED CHANGE

The proposed license amendment revises the NMP1 licensing basis to fully implement the RG 1.183 AST. As indicated in Section A1-1 above, implementation of AST for NMP1 consists of reevaluation of the applicable DBAs (LOCA, MSLB accident, Refueling Accident, and CRDA) using the AST and the 10

CFR 50.67 TEDE acceptance criteria. The proposed license amendment also revises certain TS and OL requirements that are associated with and justified by the analyses performed to support the AST. The proposed TS and OL changes are described below and are indicated on the mark-up pages provided in Attachment (2). Associated TS Bases changes are shown in Attachment (3). The TS Bases changes are provided for information only and will be processed in accordance with the NMP1 TS Bases Control Program (TS Section 6.5.6).

The proposed TS changes include revisions to applicability requirements relating to movement of irradiated fuel assemblies. These changes are similar in concept to Technical Specification Task Force (TSTF) traveler TSTF-51-A, "Revise Containment Requirements during Handling Irradiated Fuel and Core Alterations," Revision 2 (Reference A1-8.5), which was approved by the NRC on November 1, 1999. These changes concern TS operability requirements for certain safety features (e.g., secondary containment, reactor building emergency ventilation system) that the AST Refueling Accident analysis demonstrates are no longer required, after sufficient radioactive decay has occurred, to ensure that offsite doses remain within limits.

A1-2.1 Technical Specification Changes

A1-2.1.1 TS Section 1.0, Definitions

New Definition 1.16, "Dose Equivalent I-131," is added. The proposed definition is as follows:

> Dose Equivalent I-131 shall be that concentration of I-131 (microcuries/gram) that alone would produce the same dose as the quantity and isotopic mixture of I-131, I-132, I-133, I-134, and I-135 actually present. The dose conversion factors used for this calculation shall be the Committed Effective Dose Equivalent dose conversion factors listed in Table 2.1 of Federal Guidance Report No. 11, EPA, "Limiting Values of Radionuclide Intake and Air Concentration and Dose Conversion Factors for Inhalation, Submersion, and Ingestion," 1988.

New Definition 1.17, "Recently Irradiated Fuel," is added. Recently irradiated fuel is fuel that has occupied part of a critical reactor core within the previous 24 hours.

A1-2.1.2 TS Section 3.1.2, Liquid Poison System

The operability requirements for the Liquid Poison System (LPS) are revised to include both the power operating condition and whenever the reactor coolant system temperature is greater than 212°F (except for reactor vessel hydrostatic or leakage testing with the reactor not critical). Also, the "Objective" statement is revised to reflect the new post-LOCA pH control function of the LPS.

A1-2.1.3 TS Section 3.2.4, Reactor Coolant Activity Limits

The reactor coolant radioactivity concentration limit specified in TS Section 3.2.4.a is revised from 9.47 microcuries of total iodine per gram of water (μCi/gm) to 0.2 μCi/gm Dose Equivalent I-131. In addition, proposed new TS Section 3.2.4.b allows operation to continue for up to 48 hours if reactor coolant activity exceeds 0.2 μCi/gm but is less than or equal to 4.0 μCi/gm Dose Equivalent I-131.

A1-2.1.4 TS Sections 3.2.4 and 4.2.4, Reactor Coolant Activity

These limiting conditions for operation and the surveillance requirements are updated in a manner that is similar to the Standard Technical Specifications (NUREG-1433 – Reference A1-8.28), as follows:

a. The applicability of the requirements of TS Section 3.2.4.a are revised from "all operating conditions" (stated under "Applicability" for TS Section 3.2.4) to "during the power operating and hot shutdown conditions" (stated in the proposed revision to TS Section 3.2.4.a).

b. Current TS Section 3.2.4.b, which requires shutdown of the plant if the reactor coolant activity limit is exceeded, is replaced with two new specifications and associated actions:

   - Proposed new TS Section 3.2.4.b allows operation to continue for up to 48 hours, with sample analysis frequency increased to once every 4 hours, if reactor coolant activity exceeds 0.2 μCi/gm but is less than or equal to 4.0 μCi/gm Dose Equivalent I-131.

   - Proposed new TS Section 3.2.4.c requires shutdown of the plant if reactor coolant activity cannot be restored to less than or equal to 0.2 μCi/gm Dose Equivalent I-131 within 48 hours, or if at any time it exceeds 4.0 μCi/gm.

c. The radioiodine concentration limit stated in current TS Section 3.2.4.c is revised from 1.5 microcuries of total iodine per gram of water to 0.2 μCi/gm Dose Equivalent I-131.

d. Current TS Section 4.2.4.a, which requires analysis of reactor coolant samples for gross gamma activity at least every 96 hours, is deleted.

e. Current TS Section 4.2.4.b is re-worded to require verification that reactor coolant Dose Equivalent I-131 specific activity is less than or equal to 0.2 μCi/gm, the frequency of performing this surveillance is revised from "once per month" to "once per 7 days," and performance of this surveillance is limited to the power operating condition only.

f. Current TS Section 4.2.4.c, which requires analyzing a reactor coolant sample for radioactive iodines of I-131 through I-135, is revised to require verification that reactor coolant Dose Equivalent I-131 specific activity is less than or equal to 0.2 μCi/gm.

g. Item numbering is revised consistent with the above changes (editorial).

A1-2.1.5 <u>TS Section 3.3.3, Leakage Rate</u>

The reference to "10 CFR 100" in the "Objective" statement is replaced with "10 CFR 50.67."

A1-2.1.6 <u>TS Section 3.4.0, Reactor Building</u>

The operability requirements for maintaining reactor building (secondary containment) integrity are revised by deleting the requirement that reactor building integrity be in effect during the refueling condition, replacing the term "irradiated fuel" with "recently irradiated fuel," and adding "during operations with a potential for draining the reactor vessel (OPDRVs)" as a condition when reactor building integrity must be in effect. Formatting changes are also included to improve usability.

A1-2.1.7 TS Section 3.4.1, Leakage Rate; TS Section 3.4.2, Reactor Building Integrity – Isolation Valves; TS Section 3.4.3, Access Control; and TS Section 3.4.4, Emergency Ventilation System

These TS sections are revised as follows:

a. The conditions for which TS Sections 3.4.1, 3.4.2, and 3.4.3 are applicable are revised to uniformly indicate that the requirements must be met "at all times when secondary containment integrity is required," consistent with the applicability requirements for TS Section 3.4.4.

b. The action statements contained in TS Sections 3.4.1.a, 3.4.2.b, 3.4.3.b, and 3.4.4.e are revised to more clearly distinguish the actions to be taken during reactor operation versus those to be taken when handling recently irradiated fuel or an irradiated fuel cask in the reactor building or during OPDRVs. Formatting changes are also included to improve usability.

c. In TS Section 3.4.3.b.2, the item referring to "core alterations" is deleted.

A1-2.1.8 TS Section 3.4.5, Control Room Air Treatment System (CRATS)

The conditions for which TS Section 3.4.5 is applicable are revised by deleting the refueling condition, replacing the term "irradiated fuel" with "recently irradiated fuel," and adding "during operations with a potential for draining the reactor vessel (OPDRVs)." Formatting changes are also included to improve usability. In addition, the action statements contained in TS Sections 3.4.5.e and 3.4.5.f are revised to more clearly distinguish the actions to be taken during reactor operation versus those to be taken when handling recently irradiated fuel or an irradiated fuel cask in the reactor building or during OPDRVs.

A1-2.1.9 TS Table 3.6.2j, Emergency Ventilation Initiation

Note (a) to TS Table 3.6.2j, which applies to the High Radiation Refueling Platform instrumentation, is revised by replacing the term "irradiated fuel" with "recently irradiated fuel," and adding "during operations with a potential for draining the reactor vessel (OPDRVs)" as a condition when the instrumentation must be operable. In addition, the requirement that the High Radiation Reactor Building Ventilation Duct instrumentation be operable in the Refuel mode of operation is replaced by Note (a) requiring that this instrumentation be operable whenever recently irradiated fuel or an irradiated fuel cask is being handled in the reactor building, and during operations with a potential for draining the reactor vessel (OPDRVs).

A1-2.2 Renewed Operating License Change

NMP1 Renewed Operating License Condition 2.C.(3) is being deleted. This license condition required Nine Mile Point Nuclear Station, LLC (NMPNS) to submit an application for license amendment, including supporting analyses and evaluations, to demonstrate compliance with GDC 19 dose guidelines under accident conditions based upon system design and without reliance upon the use of potassium iodide. This license condition is no longer applicable since the AST analyses provided in this submittal demonstrate that the NMP1 control room operator dose exposure for the most limiting design basis accident remains within the acceptance criteria of 10 CFR 50.67 without reliance on the use of potassium iodide.

A1-3. BACKGROUND

The current NMP1 licensing basis utilizes a source term that is based on TID-14844 (Reference A1-8.4) to calculate the radiological consequences of postulated design basis accidents. In response to NRC Generic Letter 2003-01 (References A1-8.1 and A1-8.2), NMPNS indicated that reanalysis of applicable accident scenarios in Chapter XV of the NMP1 Updated Final Safety Analysis Report (UFSAR), using AST methodology, would be used to demonstrate control room habitability. To that end, this submittal contains the reanalysis and licensing basis changes necessary to meet Generic Letter 2003-01 objectives. Use of AST methodology increases the design basis unfiltered inleakage into the control room envelope to a value larger than that observed in the tracer gas testing, and eliminates the License Condition 2.C.(3) requirement that potassium iodide (KI) be available to the control room operators.

The fission product release from the reactor core into primary containment following a DBA is referred to as the "source term." The source term is characterized by the composition and magnitude of the radioactive material, the chemical and physical properties of the material, and the timing of the release from the reactor core. Since the publication of TID-14844, significant advances have been made in understanding the composition and magnitude, chemical form, and timing of fission product releases from severe nuclear power plant accidents. Many of these insights developed out of the major research efforts started by the NRC and the nuclear industry after the accident at Three Mile Island.

In 1995, NUREG-1465 (Reference A1-8.6) was published with revised ASTs for use in the licensing of future Light Water Reactors (LWRs). This NUREG represents the result of decades of research on fission product release and transport in LWRs under accident conditions. On December 23, 1999, the NRC issued the final rule on "Use of Alternative Source Terms at Operating Reactors." The final rule, issued as 10 CFR 50.67, "Accident Source Term," allows holders of operating licenses issued prior to January 10, 1997, to voluntarily replace the traditional source term used in DBA analyses with alternative source terms such as the one described in NUREG-1465. One of the major insights summarized in NUREG-1465 involves the timing and duration of fission product releases.

The five release phases describing the progression of a severe accident in a LWR are listed in NUREG-1465 and are given below.

1. Coolant Activity Release
2. Gap Activity Release
3. Early In-vessel Release
4. Ex-vessel Release
5. Late In-vessel Release

Phases 1, 2, and 3 are considered in current (i.e., pre-AST) DBA evaluations; however, they are all assumed to occur instantaneously. Phases 4 and 5 are related to severe accident evaluations. Under the AST methodology, only the coolant activity release (i.e., Phase 1) is assumed to occur instantaneously and ends with the onset of the gap activity release (i.e., Phase 2). This approach represents a more realistic time sequence for activity release. The insights from NUREG-1465 were subsequently incorporated into RG 1.183.

A1-4. TECHNICAL ANALYSIS

A1-4.1 Radiological Consequence Analyses

NMPNS has performed radiological consequence analyses of the DBAs documented in Chapter XV of the NMP1 UFSAR that potentially result in the most significant control room and offsite exposures. These analyses were performed to support full scope implementation of AST. The AST analyses have been performed in accordance with the guidance in RG 1.183 and Standard Review Plan (SRP) 15.0.1 (Reference A1-8.7). Acceptance criteria consistent with those required by 10 CFR 50.67 and RG 1.183, Table 6, were used to replace the current design basis source term acceptance criteria. The following NMP1 DBAs were addressed:

- Loss of Coolant Accident (LOCA), UFSAR Sections XV-C.2.0 and XV-C.5.0
- Main Steam Line Break (MSLB) Accident, UFSAR Section XV-C.1.0
- Refueling Accident, UFSAR Section XV-C.3.0
- Control Rod Drop Accident (CRDA), UFSAR Section XV-C.4.0

The AST analyses included the following:

1. Identification of the core source term based on plant specific analysis of core fission product inventory.
2. Determination of the release fractions.
3. Analysis of new atmospheric dispersion factors (X/Q values) for the radiological propagation pathways.
4. Calculation of fission product deposition rates and removal efficiencies.
5. Calculation of offsite and control room personnel TEDE doses.
6. Evaluation of suppression pool pH to ensure that the iodine deposited into the suppression pool during a DBA LOCA does not re-evolve and become airborne as elemental iodine.
7. Evaluation of other related design and licensing bases such as NUREG-0737, "Clarification of TMI Action Plan Requirements" (Reference A1-8.9).

The analysis methodology, assumptions, and inputs for radionuclide release, transport, and removal for each of the analyzed DBAs are described in the following sections. An assessment of conformance with the guidance provided in RG 1.183 is provided in Tables A1-1 through A1-5.

A1-4.1.1 Evaluation Methodology

A summary of the computer codes used in the AST analyses is provided in Table A1-6. Summary descriptions of these codes are provided below or in the section describing the specific DBA where the code is utilized.

A1-4.1.1.1 Fission Product Inventory

The ORIGEN2 code (Reference A1-8.10) was used to calculate plant-specific fission product inventories which bound the effect of 24-month fuel cycles, power operation at the current licensed thermal power of 1850 MWt (plus the current accident analysis design basis allowance of 2% for instrument uncertainty), and the currently used General Electric GE-11 fuel design (see Table A1-7 for fuel data). Bounding values of fission product activity were determined for each radionuclide in the DBA radiological analyses by considering enrichment and exposure. Fission product activities were calculated for immediately after shutdown and decayed for the required times. The shutdown values are shown in Table A1-8.

A1-4.1.1.2 Dose Assessment

The RADTRAD computer code Version 3.03 (Reference A1-8.11) was used for the LOCA and CRDA calculations. Due to simplifying and conservative assumptions, a spreadsheet was used to calculate doses for the MSLB accident, the Refueling Accident, and one of the two CRDA cases. The computer code STARDOSE (Reference A1-8.12) was used to check the RADTRAD results. The RADTRAD and STARDOSE programs are radiological consequence analysis codes used to determine post-accident doses at offsite and control room locations. The STARDOSE code is the proprietary property of Polestar Applied Technology, Inc. The NRC has previously reviewed results obtained from the application of the STARDOSE code as part of the Vermont Yankee and Browns Ferry AST applications (References A1-8.23 and A1-8.24, respectively).

The evaluation of post-LOCA shine doses to control room personnel from the passing plume, the CRATS filters, and the reactor building airborne activity was performed using the QADMOD code (Reference A1-14). QADMOD was also used to confirm actuation of the RBEVS due to high radiation levels in the reactor building. QADMOD has been applied previously to analyses of this type for NMP1. The QADMOD results were independently verified either manually or with the MicroShield code. The MicroShield code (Reference A1-13) is a point kernel integration code used for general purpose gamma shielding analysis.

A1-4.1.1.3 Containment Activity Removal

Credit is taken for the reduction of airborne activity in the primary containment due to natural deposition and sprays (RG 1.183, Appendix A, Sections 3.2 and 3.3).

<u>Modeling with STARNAUA</u>

Aerosol removal in containment is governed by a number of processes modeled by the STARNAUA computer code (Reference A1-8.15) including gravitational settling (sedimentation) and removal by sprays. In addition, agglomeration (coagulation) of particles is modeled; in fact, removal by sprays may be considered a special case of agglomeration.

Agglomeration is more pronounced when the number density of particles in the containment atmosphere is large. It is apparent from Stokes Law that larger particles are removed more efficiently than smaller ones (both for sedimentation and for spray removal); therefore, agglomeration can substantially increase the removal rate. Because large particles are more readily removed than smaller ones, the particle size distribution gets more and more depleted of large particles as time goes on. Agglomeration mitigates this trend, tending to be a source of large particles.

An important special case of interest occurs when containment sprays are present. In this case, the agglomeration takes place between the very large spray droplets and the aerosol particles, which results in a very efficient process for removing the particles.

Sedimentation is always an important removal mechanism for aerosol particles and is often the predominant one, even in the absence of sprays. When sprays are present, sedimentation of the compound spray droplet/particle accounts for almost all of the aerosol removal.

Sedimentation of aerosols (as opposed to that of spray droplets) is well understood in terms of the Stokes-Cunningham law which gives the terminal settling velocity for a single particle of actual radius r_p as:

$$v_s = \frac{2Cg(\rho_p - \rho_{gas})r_p^2}{9\mu_{gas}}$$

where:

v_s = settling velocity, cm/sec
g = gravitational acceleration, 980 cm/sec^2
ρ_p = density of the particle, g/cm^3
ρ_{gas} = density of air (or the containment atmosphere), g/cm^3
μ_{gas} = viscosity of air (or the containment atmosphere), g/cm-sec

$$C = \text{Cunningham slip factor} = 1 + \frac{\lambda}{r_p}\left(1.246 + 0.42\exp(-\frac{0.87r_p}{\lambda}\right)$$

λ = gas mean free path, cm
r_p= particle actual radius

(Note that STARNAUA employs cgs units throughout.)

The expression above is valid for particles of radius less than ~50 microns (i.e., aerosols) which adequately covers the particle size range of interest. (It does not apply to spray droplets, which are considerably larger and are treated differently.)

Settling and spray removal rates are strongly dependent on the size (and material density) of the aerosol particles. In STARNAUA, the aerosol population is characterized by a size distribution which evolves in time from its initial (source) function to a time-dependent distribution as particles of different sizes are added, agglomerate, and/or are removed at different rates. The initial source size distribution is assumed to be characteristic of the aerosol released into the containment.

In so-called "discrete" codes (including STARNAUA), the size distribution is defined by choosing appropriate minimum and maximum particle sizes and dividing the interval between the two into a number of "bins". The initial size distribution is then entered as the fraction of the total number of particles assigned to each bin. The population of each bin is then followed as a function of time. The larger the number of bins, the more accurately the distribution will be represented, but at the cost of increased computing time. The NMP1 analysis for drywell spray was conducted using 30 bins covering 4.54E-3 microns to 90.8 microns aerodynamic radius for the initial distribution.

It has been observed that many aerosol distributions (number of particles, N, as a function of particle radius, r), both those occurring naturally and those resulting from industrial or other processes of human origin, are of the log-normal type. It should be noted that such a distribution is completely defined by two

parameters: $(\ln(r))_m$ and σ_g. The parameter $(\ln(r))_m$ is the mean value of ln(r) for the aerosol population. To characterize the initial (source) distribution, STARNAUA replaces $(\ln(r))_m$ by the closely related parameter r_g, where r_g is the (geometric) mean particle radius ($\ln(r_g) = (\ln(r))_m$).

The results of a number of large-scale fuel melt experiments were analyzed in order to obtain values of r_g and σ_g. The results were then averaged to obtain what is believed to be the most representative values of the source size distribution in a reactor fuel melt accident. The representative values are $r_g = 0.22$ μm and $\sigma = 1.81$ ($\sigma_g = 0.5933$). These are the values that are normally input into STARNAUA calculations (except for a small correction due to the void fraction of the particles).

An important consideration in sedimentation arises from the fact that the aerosol particles are not considered to be solid, but are assumed to have void fractions that are filled with gas if the containment atmosphere is dry, or filled with water if the atmosphere is at or near saturation. For plants with sprays operating, it is generally assumed that the voids are water-filled.

The mechanisms that contribute to the spray collection efficiency modeled in STARNAUA include interception, impaction, Brownian diffusion of aerosol particles to the droplet, and diffusiophoretic deposition of particles to the droplets if the thermal-hydraulic conditions result in steam condensation on the droplets. The latter effect is neglected for NMP1. The overall spray collection efficiency is the sum of the individual efficiencies of these processes, which are dependent on both the droplet and the particle sizes.

Thermal-Hydraulic Conditions

The density and viscosity of the containment atmosphere are functions of input thermal-hydraulic conditions in the containment (temperature and gas composition (steam/nitrogen ratio)), which will vary with time. STARNAUA contains function statements that yield these quantities at each time step in the calculation. The input values of temperature and steam/nitrogen ratio (relative humidity) are taken from the current licensing basis figures of drywell pressure and temperature presented in the NMP1 UFSAR Chapter XV for the case with core spray operating, which is the more limiting thermal-hydraulic case.

Mass of Inert Aerosol Release

In addition to fission products released as aerosols, non-fission product fuel and structural ("inert") material aerosols are also released. Although these do not contribute significantly to radiation exposure, their presence in the total aerosol is important, since they do contribute to the aerosol number density in the containment atmosphere and take part in aerosol agglomeration. Thus, they influence the removal rates of the fission product aerosols from the containment atmosphere. It is thus essential to include them in the aerosol source term in STARNAUA calculations. The ratio of structural material to fission product aerosols should be at least 2.4. This value is considered to be conservative; i.e., it will result in less aerosol removal than a larger value would. For NMP1, an even more conservative ratio of 1:1 was used.

In a STARNAUA calculation, the fission product aerosol release in each release period for each fission product is determined on the basis of its core inventory at the time of the accident and its release fraction from the core. The fission product release rates are summed, and for the in-vessel release period, the inert release rate is taken as equal to the sum of the total fission product releases (gap plus in-vessel release periods) times the assumed inert/fission product ratio. It is assumed that no inert release occurs during the gap release period.

The removal of elemental iodine is assumed to occur at the same rate and with the same degree of completeness as particulate except that the spray lambda is not permitted to exceed 20 per hour. The assumption of equal removal is based on the propensity for elemental iodine to adsorb onto surfaces (in this case, the large surface area of the dispersed particulate). Once the iodine is dissolved in the spray water, for a suppression pool pH of 8.3 at 24 hours (the point in time when spray credit ceases), the ratio of iodine concentration in the liquid phase to that in the gas will be approximately 24,000. For a primary containment gas-to-liquid volume of about 3.75 for NMP1, this means that not more than 0.016% of the total iodine would remain airborne as elemental iodine at that time. This is negligible considering the residual 0.15% iodine airborne in organic form (itself a minor contributor to dose). With the suppression pool pH being greater than 7.0 even at 30 days, re-evolution of elemental iodine later in the accident does not need to be considered.

A1-4.1.1.4 Main Steam Line Activity Removal

Credit is taken for the reduction of airborne activity in the main steam lines between the inboard and outboard main steam isolation valves (MSIVs) due to natural deposition (RG 1.183, Appendix A, Section 6.3).

Modeling with STARNAUA

The calculation of aerosol removal in the main steam lines is also accomplished with STARNAUA. It is assumed that particulate in the portion of the main steam line between the inboard and the outboard MSIVs is subject to removal by deposition as allowed by RG 1.183, Appendix A, Section 6.3 as long as both MSIVs are closed. This portion of the steam lines is horizontal; thus, the full projected area may be credited for sedimentation. Because sedimentation is minimized by the assumption of high temperature, the steam line is conservatively assumed to remain at its maximum temperature for the full duration of the analysis. This assumption also minimizes residence time in the volume between the MSIVs, which also adds conservatism.

It is also assumed that particulate mass and activity and elemental iodine activity are reduced by a factor of two due to particle impaction at the inboard or outboard MSIV, whichever is the first closed valve encountered. However, once the particulate enters the steam line beyond the first closed MSIV, no further elemental iodine removal is considered in the steam lines. This is very conservative, because even if re-evolution from the particulate surfaces were to occur in the hot, dry conditions of the steam line, some deposition and retention would be expected on the metal surfaces in those volumes, as well.

A1-4.1.1.5 ESF Leakage during Reactor Building Drawdown Period

Background

The mechanical pressure-boundary elements of systems recirculating reactor coolant/suppression pool water post-accident outside the primary containment (such as pump seals, valve stem packing, flanges, etc.) are subject to leakage. For NMP1, the design basis leakage rate is 600 gph. In accordance with RG 1.183, this value is increased by a factor of two for purposes of the AST dose analysis, and 10% of the radioiodine dissolved in the reactor coolant is assumed to re-evolve from the liquid and become airborne as it leaks from the ESF systems.

ESF Leakage Iodine Treatment

There is a functional relationship between the iodine concentration in the liquid and that in the gas above the liquid. Using models from NUREG/CR-5732, "Iodine Chemical Forms in LWR Severe Accidents" (Reference A1-8.26), the following expression can be obtained for H, the ratio of iodine concentration in the liquid phase to that in the gas phase:

$$H = 10^{5.99-0.0149T}(2 + e^{1.72(pH)-6.08}).$$

For example, if T = 347°K (165°F, the maximum suppression pool temperature) is used in connection with a pH of 7, the value of H is 2571. This means the liquid phase mass concentration of iodine will be 2571 times the gas phase concentration of iodine at equilibrium. If the liquid phase leak rate is L in gph, then the fraction of incoming iodine (Φ) that can be removed by an equilibrium ventilation gas flow (GF) in cfm is the iodine removed/iodine in, or:

$$\Phi = GF(448.8 \text{ gph/cfm})/HL$$

Solving for the gas flow:

$$GF = \Phi HL/(448.8 \text{ gph/cfm}) = \Phi\{10^{5.99-0.0149T}(2 + e^{1.72(pH)-6.08})\}L/(448.8 \text{ gph/cfm})$$

For L = 1200 gph, and Φ = 10%:

$$GF = 0.267\{10^{5.99-0.0149T}(2 + e^{1.72(pH)-6.08})\}.$$

For the pH = 7/T = 347°K example, GF = 687 cfm.

While this gas flow is not excessive in a general ventilation sense, it is large relative to the outleakage of the reactor building (RB) during the drawdown period. For example, it is 220 times greater than the containment leak rate of 1.5 %/day (3.125 cfm). Therefore, while the reactor building outleakage may be capable of conveying all of the containment leakage to the environment during drawdown, it is physically impossible for it to convey all of the iodine released from ESF leakage.

The maximum calculated pressure in the RB during drawdown assuming single RBEVS train operation is illustrated in Attachment (4), Figure A4-1. The peak reactor building pressure of 2.31 inches of water is reached in 205 seconds after the LOCA and concurrent loss of offsite power. Using the pressure transient in the RB as shown on Figure A4-1, the potential outleakage during drawdown may be calculated. Note that in calculating this internal pressure, 80% of the leakage area was assumed to be at the point of maximum pressure on the windward side of the building. If this assumption were applied consistently, only 20% of the leakage area would be available for outleakage. However, for conservatism, outleakage is calculated on the basis of 50% of the leakage area being at a point on the leeward side of the reactor building where the building pressure is negative. For the 95th percentile wind speed of 22 mph, the corresponding local pressure is -0.162 inches of water.

The transient outleakage rate is presented on Figure A1-2. Also presented on this figure is the air flow necessary to purge away the re-evolved iodine based on the instantaneous pH of the leakage stream. Note that initially (because the RB pressure is high and the pH of the leakage is low), the building outleakage is much greater than the iodine purge flow. However, as shown in Calculation H21C084 (see Attachment 8), by 30 minutes, the suppression pool pH has increased to about 7.2 due to the addition of fission product cesium compounds, with the result that the purge flow is about 1000 cfm. At the same time, the RB

leakage flow has been reduced to 1000 cfm. Beyond this point, decreasing RB internal pressure and continued maintenance of suppression pool pH above 7.0 (by injection of sodium pentaborate solution by the LPS) produces a situation in which the air flow necessary to remove the re-evolving iodine is greater than the air flow that can leak from the RB.

What would happen at this point, in reality, is that airborne iodine would begin to accumulate in the RB atmosphere and iodine re-evolution would be suppressed. However, for conservatism in the NMP1 LOCA dose analysis, the excess iodine (that which is greater than the RB can leak) is assumed to be released via the RBEVS without holdup.

A1-4.1.2 Inputs and Assumptions

General inputs for the DBA radiological consequence analyses are listed in Table A1-9. Event-specific inputs and assumptions are further discussed in the following sections. New atmospheric dispersion factors (X/Q values) for the control room intake, Technical Support Center (TSC) intake, and offsite (exclusion area boundary (EAB) and low population zone (LPZ)) have been calculated and represent a significant change from the values used in the current radiological design basis analyses. Section A1-4.3 and Attachment (7) provide additional information regarding X/Q values.

A1-4.1.3 Loss of Coolant Accident (LOCA)

The radiological consequences of the DBA LOCA were analyzed using the RADTRAD code and verified with the STARDOSE code, with the inputs and assumptions defined in Section A1-4.1.3.1 below. The LOCA analysis is fully documented in Calculation H21C092 (see Attachment 8).

A1-4.1.3.1 Inputs and Assumptions

The key inputs used in the AST LOCA analysis are included in Tables A1-9 through A1-12. These inputs and assumptions fall into three categories: Radionuclide Release Inputs and Timing, Radionuclide Transport Inputs, and Radionuclide Removal Inputs. The LOCA analysis is fully documented in Calculation H21C092 (see Attachment 8). The analysis includes five release pathways (illustrated schematically on Figure A1-1), as follows:

Pathway 1: Leakage from Primary Containment (PC) directly to the environment (includes Reactor Building (Secondary Containment) bypass leakage and MSIV leakage);

Pathway 2: Leakage from the PC directly to the environment only for the duration of RB drawdown (i.e., prior to re-establishing RB negative pressure);

Pathway 3: Leakage from the PC into the RB and subsequent release to the environment via the RBEVS and the plant stack after RB drawdown (i.e., RB negative pressure is re-established);

Pathway 4: Engineered Safety Feature (ESF) leakage from the PC directly to the environment only for the duration of RB drawdown (i.e., prior to re-establishing RB negative pressure). Note that a portion of the ESF leakage prior to RB drawdown is assumed to be released from the plant stack because the volumetric flow associated with the re-evolved ESF leakage iodine is too great to leak from the RB as building leakage during drawdown. This is discussed in Section A1-4.1.1.5 above.

Pathway 5: ESF leakage from the PC into the RB and subsequent release to the environment via the RBEVS and the plant stack after RB drawdown (i.e., RB negative pressure is re-established).

All of these pathways were initially analyzed for two accident scenarios: one in which the failure of an RBEVS train delays drawdown of the RB (affecting Pathways 2 through 5) and one in which an MSIV fails to close (affecting Pathway 1). However, the limiting scenario is an assumed loss of offsite power concurrent with the LOCA and failure of an emergency diesel generator (EDG) to operate. The EDG failure results in only a single RBEVS train operating (which delays drawdown of the RB and produces essentially a fully bypassed secondary containment for an extended period), and also results in one inboard MSIV failing to close (which reduces activity removal in one main steam line).

Radionuclide Release Inputs and Timing

The Pathway 1 releases are secondary containment bypass pathways, which include MSIV leakage and leakage via other systems (i.e., feedwater, torus vent, drywell vent and emergency condenser vent and drain) that provide pathways from the primary containment. They are treated as ground level releases from either the RB or the turbine building. Pathway 2 and Pathway 4 releases are from the RB at ground level during drawdown. Pathway 3 and Pathway 5 releases are from the plant stack. Event timing is as follows:

- LOCA occurs at time zero. Degraded core cooling leads to core damage.
- Release from core to PC begins at 2 minutes.
- Drywell sprays are initiated automatically and spray begins at 75 seconds.
- RBEVS starts automatically within a few minutes and RB drawdown is achieved in 6 hours (for a single RBEVS train operating).
- Further core damage and associated activity releases are terminated at 122 minutes by assumed restoration of core cooling. Drywell and torus airspace become well-mixed at that time.
- Within 1.5 hours, the Liquid Poison System (LPS) is initiated and the contents of the LPS storage tank begin to mix with the suppression pool (torus) water. See Section A1-4.2 and Attachment (5).
- By 24 hours, the containment pressure has decreased to less than 5 psig, and the PC leak rate has become a factor of two less than the maximum PC leak rate (except for ESF liquid leakage).
- By 720 hours, essentially all particulate activity has been leaked or deposited and gaseous I-131 (the principal dose contributor excluding particulate I-131) has gone through nearly four half-lives. The dose calculation is terminated in accordance with RG 1.183.

The timing of these events is based on RG 1.183 and as further discussed below.

Reactor Building Drawdown Time

Prior to establishing a sustained negative pressure in the RB, PC leakage is assumed to be released directly to the environment from the refueling floor elevation via sheet-metal siding. The time at which the RB pressure becomes sufficiently low to justify no further out-leakage is an important parameter of the DBA LOCA analysis. The reactor building drawdown calculation is discussed in Attachment (4).

Drywell Spray Initiation

The containment spray pumps will automatically start within 60 seconds of the Reactor Protection System (RPS) receiving both a high drywell pressure and a low-low reactor water level signal. The containment spray pumps spray water from the suppression pool into the drywell and torus airspaces. Spray is assumed to begin at 75 seconds, prior to the start of the gap activity release. The containment spray system is described in UFSAR Sections VII-B and XVI-C.2.0. The system is designated safety-related and system operability is governed by TS Section 3.3.7.

Drywell and Torus Mixing

RG 1.183 establishes that only the drywell volume should be credited for diluting the activity release from the core for a BWR. For plants with Mark I containment designs, no specific guidance on how to treat mixing between the drywell and the remainder of the containment is provided. Instead, the general guidance is that the torus airspace "...may be included provided there is a mechanism to ensure mixing..." The NMP1 analysis credits mixing of the drywell and torus airspace volumes beyond 122 minutes, following the restoration of core/core debris cooling. At this time, considerable thermal-hydraulic activity in the PC will result in the drywell and torus airspace volumes becoming well-mixed.

Liquid Poison System Injection

The analysis credits the pH buffering effect of sodium pentaborate solution introduced into the suppression pool post-LOCA by operation of the LPS. The LPS injection will maintain the suppression pool pH above 7.0 for the 30-day duration of the accident; therefore, radioiodine re-evolution does not need to be considered.

The LPS is safety-related, required to be operable by TS 3.1.2, and supplied with emergency power. Suitability of the LPS to perform the post-LOCA pH control function, details of the AST analysis for suppression pool pH control, and a discussion of procedural guidance for post-LOCA injection of the sodium pentaborate solution using the LPS are addressed in Attachment (5).

Primary Containment Leakage and Leak Rate Reduction Justification

The maximum allowable primary containment leakage rate is 1.5 percent (1.5%) PC air weight per day, per TS Section 3.3.3. This leakage rate was assumed in the AST analyses for the first 24 hours. RG 1.183 requires justification for implementing a factor of two decrease in PC leak rate at 24 hours after the start of the accident. The use of the containment spray system reduces the drywell pressure from its peak value of 35 psig to approximately 5 psig at 24 hours, a factor of seven reduction based on the gauge pressure. Thus, a factor of two reduction in PC leak rate at 24 hours is justified. Calculation H21C092 (see Attachment 8) provides additional details.

Engineered Safety Feature Leakage

Leakage from ESF components outside primary containment was reviewed. NMP1 has implemented a program in accordance with TS Section 6.5.2 to minimize leakage from those portions of systems outside containment that could contain highly radioactive fluids during a serious transient or accident to levels as low as practicable. The program includes the following:

- Preventive maintenance and periodic visual inspection requirements; and
- System leak test requirements for each system at 24 month intervals.

The NMP1 program effectively eliminates ESF leakage. However, the LOCA analysis assumed an ESF leakage rate of 1200 gallon per hour (gph) into the reactor building starting at the onset of the event. This leakage rate is two times the sum of the simultaneous leakage from all ESF components that is allowed by the program specified in TS Section 6.5.2.

MSIV Leakage Rate

The total MSIV leakage rate of 100 scfh (maximum of 50 scfh in either line) was assumed in the analyses for the first 24 hours. At 24 hours, the MSIV leakage rate was reduced by a factor of two, consistent with the PC containment leakage rate reduction. The maximum allowable MSIV leakage values are controlled by the 10 CFR 50 Appendix J Testing Program that is described in TS Section 6.5.7. The allowable leakage was converted to a true volumetric flow rate for the appropriate conditions, as described in Calculation H21C092.

Secondary Containment Bypass Leakage

Primary containment leakage via the lines which penetrate the RB is taken into account. These include two feedwater lines, two torus vent/purge lines, two drywell vent/purge lines, four emergency condenser drain lines, and two emergency condenser vent lines. Leakage from the PC through the closed primary containment isolation valves in these systems could bypass the RB and the RBEVS filters and could also result in a ground-level release. A total combined leakage rate of 41.5 scfh is conservatively assumed to begin at the start of the event. The maximum allowable bypass leakage values are controlled by the 10 CFR 50 Appendix J Testing Program that is described in TS Section 6.5.7. No credit is taken for activity removal in these pathways.

Radionuclide Transport Inputs

Pathway 1 – Leakage from Primary Containment Directly to the Environment (Secondary Containment Bypass Pathways)

This pathway models the leakage from the lines which penetrate the PC and then penetrate the RB. Leakage from the PC through the closed containment isolation valves (CIVs) in these systems could bypass the RB and the RBEVS filters and could also result in a ground-level release. This includes MSIV leakage and the combined leakage from feedwater, torus vent, drywell vent, and emergency condenser vent and drain line CIVs.

Assumptions

The release from the core is assumed to enter the drywell only. Mixing within the entire PC is not assumed to occur until after the end of the release. Credit for drywell deposition is taken from the time the release starts at 2 minutes (i.e., drywell sprays are operating at the start of release). A factor of two reduction in leak rates is assumed to occur at 24 hours, based on containment pressure reduction. These releases are assumed to be released at ground level.

The MSIV leakage pathway includes the steam line volume between the inboard and outboard MSIVs only. The model includes two parallel main steam line flow paths to the environment. For the line with the MSIV that fails to close, the volume between the MSIVs is ignored, and the release is directly from the PC to the environment except that the impaction decontamination factor of 2 is credited. For the line with both MSIVs closed, the model credits deposition in the volume between the MSIVs. The piping upstream of the inboard MSIV and downstream of the outboard MSIV is neglected, even though the downstream main steam piping is seismically rugged and would remain intact during and following a design basis earthquake. Each line is assumed to leak at 50 scfh (100 scfh total).

The non-MSIV secondary containment bypass leakage is treated conservatively. Other than a decontamination factor (DF) of 2 for impaction at the first closed CIV (also applied to the steam lines), no credit is taken for deposition in piping or components (either inside or outside the PC). The non-MSIV bypass pathways have a combined total leak rate of 41.5 scfh.

Pathway 2 – Leakage from Primary Containment Directly to the Environment during RB Drawdown (Ground Level)

This pathway makes a significant contribution to the DBA-LOCA doses. It consists of leakage from the PC that occurs prior to establishing a sustained negative pressure in the RB and, therefore, is assumed to be released directly to the environment from the refueling floor elevation via the sheet-metal siding.

Assumptions

The release from the core is assumed to enter the drywell only. Mixing within the entire PC is not assumed to occur until after the end of the release. Credit for drywell deposition is taken from the time the release starts at 2 minutes (i.e., drywell sprays are operating at the start of release). This release is assumed to be released at ground level.

The release rate during drawdown corresponds to the PC leak rate of 1.5% air weight per day. A drawdown time of 6 hours from the start of the DBA-LOCA is used in the analysis. There is significant conservatism in the use of a 6-hour drawdown time. The analysis described in Attachment (4) shows that a reactor building pressure of -0.25 inches water gauge (WG) is actually achieved at approximately 5 hours. In addition, the drawdown analysis indicates that the reactor building pressure becomes negative at approximately 26 minutes and that there is a significant period when the pressure is -0.15 inches WG or less (from approximately 67 minutes to 5 hours).

Pathway 3 – Leakage from Primary Containment to the Environment via the Reactor Building, RBEVS, and Plant Stack (after RB Drawdown)

For this pathway, PC leakage is into the RB where it is filtered by the RBEVS and released to the environment via the main stack.

Assumptions

For this pathway, airborne releases from the PC to the RB begin after the drawdown period (6 hours). As for the previous pathways, the release from the core is assumed to enter the drywell only. Mixing within the entire PC is not assumed to occur until after the end of the release (at 2.033 hours). Credit for drywell deposition is taken from the time the release starts at 2 minutes (i.e., drywell sprays are

operating at the start of release). A factor of two reduction in leak rates is assumed to occur at 24 hours, based on containment pressure reduction.

The release rate during drawdown corresponds to the PC leak rate of 1.5% air weight per day from the drywell (and also from the torus airspace after 2.033 hours). RBEVS filter efficiencies of 95% for particulates and elemental iodine and 90% for organic iodine are assumed. The release is via the main stack.

Pathway 4 – ESF Leakage from Primary Containment to the Environment during RB Drawdown (Ground Level)

ESF leakage is modeled as a continuous 1200 gph (2.67 cfm) volumetric flow from the suppression pool control volume to the RB. During the drawdown period, the release corresponding to the maximum outleakage from the reactor building is assumed to be released directly to the environment at ground level. After 0.5 hours (the point in time when the iodine purge flow exceeds the maximum outleakage rate), a portion of the total flow is released to the environment via the main stack (see Pathway 5).

Assumptions

A drawdown time of 6 hours from the start of the DBA-LOCA is used in the analysis. As noted above, there is significant conservatism in the use of a 6-hour drawdown time. The ESF leak rate of 1200 gph (2.67 cfm) is assumed to begin at the initiation of the accident. The leak rate is reduced to 1.74 cfm at 0.5 hrs, 0.83 cfm at 0.7 hrs, 0.22 at 1.0 hr, 0.10 cfm at 2.033 hrs, and stops at 6 hours. Ten percent of the iodine in the ESF leakage is assumed to become airborne. All of the elemental and organic iodine that becomes airborne is released.

Pathway 5 – ESF Leakage from Primary Containment to the Environment via the Reactor Building, RBEVS, and Plant Stack (after RB Drawdown)

ESF leakage is modeled as a continuous 1200 gph (2.67 cfm) volumetric flow rate from the suppression pool control volume to the RB.

Assumptions

Beginning at 0.5 hrs, 0.93 cfm is released directly (without holdup) via the RBEVS and the stack. This increases to 1.84 cfm at 0.7 hrs, 2.45 cfm at 1.0 hr, and 2.57 at 2.033 hrs. By 6 hours, the full 2.67 cfm is released to the RB volume, filtered by the RBEVS, and discharged via the plant stack. Ten percent of the iodine in the ESF leakage is assumed to become airborne. All of the elemental and organic iodine that becomes airborne is released.

Radionuclide Removal Inputs

LOCA activity release is partially removed by spray in the drywell, natural deposition in the main steam lines, and by removal by the RBEVS filters.

In the Drywell

The drywell spray removal rate development applies to both the MSIV leakage pathway and the RB/RBEVS/Main Stack pathway, as well as to the RB bypass leakage pathway.

Drywell spray removal for particulate is determined using the STARNAUA code (Reference A1-8.15). There are four system-related parameters that are needed to employ the STARNAUA code particulate removal model for spray: droplet size, spray flow rate, spray fall height, and the volume sprayed.

The droplet size is based on spray nozzle testing data. For the primary spray subsystem (Loop 11), the mass mean droplet size is conservatively determined to be 779.2 μm. For the secondary spray subsystem (Loop 12), the mass mean droplet size is conservatively determined to be 813.5 μm. It is also conservative to use the mass mean droplet size as the representative droplet size for calculation of the removal rate.

The spray flow rates are 6449 gpm for the primary spray subsystem and 6383 gpm for the secondary spray subsystem. Only one subsystem (the secondary subsystem, Loop 12) is credited in the analysis as it has both a larger mass mean droplet size and lower flow rate, both of which tend to reduce spray removal. The secondary spray flow rate is multiplied by 0.67 for additional conservatism (to account for drywell congestion), and the fall height used (21.4 feet) reflects a one-third reduction to account for drywell congestion.

The particulate removal rate, λ, was calculated in Calculation H21C092 (see Attachment 8) and applied to the RADTRAD model. The removal rate for elemental iodine is limited to 20 hr^{-1} and the elemental iodine spray λ limitation of Standard Review Plan 6.5.2 (Reference A1-8.27) is met.

In the Steam Lines

For the NMP1 AST analyses, the particulate settling rates were calculated by using Polestar computer code STARNAUA, taking into account the drywell spray as discussed in Section A1-4.1.1.4 and a decontamination factor of 2 due to impaction before entering the space between the two closed MSIVs.

A1-4.1.3.2 Technical Support Center (TSC) LOCA 30-Day Dose

An analysis for the TSC 30-day inhalation and immersion doses was performed. Two scenarios were considered, one with the TSC occupied at the initiation of the event and the other assuming that the TSC is not activated for 1 hour. This was done because the emergency ventilation (filtration) system in the TSC is manually initiated by the first person to arrive. For an off-hours event, actuation could be delayed by up to 1 hour. The direct shine doses were based on a comparison to the AST shine doses for the control room.

A1-4.1.3.3 Results

The LOCA doses are the result of the following activity contributions:

1. Primary to secondary containment (reactor building) leakage. This leakage is directly released into the RB. During the drawdown period, this leakage is assumed to be directly released to the environment. Following drawdown, it is filtered by the RBEVS prior to release through the plant stack.

2. ESF leakage into the secondary containment. This leakage is directly released into the RB environment and the airborne portion is filtered by the RBEVS prior to release through the plant stack. The activity in the ESF leakage to the RB during the drawdown period is assumed to be directly released to the environment as long as the accompanying purge flow is less than the volumetric outleakage. Once the purge flow exceeds the volumetric outleakage, the difference is assumed to be released via the RBEVS and the stack.

3. MSIV leakage from the primary containment directly to the atmosphere with credit for deposition in the main steam piping between the inboard and outboard MSIVs before it is released to the environment. An impaction decontamination factor of 2 for aerosol and adsorbed elemental iodine is assumed at the first closed MSIV.

4. Secondary containment bypass leakage (other than through the MSIVs), assumed to be released at ground level. No credit is taken for deposition in piping prior to release except that an impaction decontamination factor of 2 for aerosol and adsorbed elemental iodine is assumed at the first closed CIV.

5. Post-DBA LOCA radiation shine dose to personnel within the control room from activity released to the RB and collected on the RBEVS and CRATS filters.

The limiting scenario is an assumed loss of offsite power concurrent with the LOCA and failure of an EDG to operate. This scenario results in one RBEVS train failing to operate and one inboard MSIV failing to close, which maximizes the calculated doses in comparison to other single failures that could be postulated.

The radiological consequences for the postulated LOCA are given in Table A1-13, along with the results from the current licensing basis source term analysis. As indicated, the EAB, LPZ, and control room calculated doses remain within the regulatory limits.

The analysis for the TSC demonstrates that 30-day inhalation and immersion doses do not exceed 5 rem TEDE.

A1-4.1.4 Main Steam Line Break (MSLB) Accident

Section XV-C.1.0 of the NMP1 UFSAR describes the design basis MSLB accident. The postulated MSLB accident assumes a double ended break of one main steam line outside the secondary containment with displacement of the pipe ends that permits maximum blowdown rates. The break flow is terminated by closure of the main steam isolation valves (MSIVs). The break mass released includes the line inventory plus the system mass released through the break prior to isolation. The MSLB accident analysis is fully documented in Calculation H21C094 (see Attachment 8).

Fuel damage is not predicted for this event, as the core is not uncovered. The following case was evaluated that corresponds to the proposed new maximum iodine concentration that will be allowed in the primary coolant:

- Pre-accident spike of 4 μCi/gm Dose Equivalent I-131.

A1-4.1.4.1 Inputs and Assumptions

The key inputs and assumptions used in the AST MSLB accident analysis are shown in Table A1-14. The radiological consequences of the design basis MSLB accident were analyzed using a spreadsheet and followed the guidance of RG 1.183. The following conservative assumptions were used in the analysis:

- Break isolation is assumed in 11 seconds, corresponding to the maximum MSIV closing time of 10 seconds plus a closure signal delay time of 1 second. No credit is taken for reduction in flow as the valves close.
- Following accident initiation, the radionuclide inventory from the released coolant is assumed to reach the environment instantaneously. No holdup in the turbine building is credited.
- The entire released coolant mass is conservatively used (rather than just the liquid mass) in the calculation of the activity released.
- An infinite exchange rate between the control room and the environment is assumed. No credit is taken for filtration of the control room intake air.
- No credit is taken for other iodine removal mechanisms, such as plate-out, sedimentation, condensation, or decay.

The MSLB analysis included continuous release X/Q values for the EAB and LPZ and an instantaneous ground level puff release X/Q for the control room. The inputs shown in Table A1-15 were used to calculate the puff release X/Q, and the complete calculation (H21C078) is provided in Attachment (8). The resulting X/Q values that were used for the MSLB radiological dose calculations are shown in Table A1-16. Additional information concerning the calculation of new atmospheric dispersion factors (X/Q values) is provided in Attachment (7).

This event only credits closure of the MSIVs to terminate the reactor blowdown. Since the MSIVs are redundant, the release is not impacted by a single failure. No other safety systems are credited in the determination of releases and consequences. Therefore, single failures have no adverse effects on the analysis results.

A1-4.1.4.2 Results

The radiological consequences for the postulated MSLB accident are given in Table A1-17, along with the results from the current licensing basis source term analysis. As indicated, the EAB, LPZ, and control room calculated doses remain well within the regulatory limits.

A1-4.1.5 Refueling Accident

Section XV-C.3.0 of the NMP1 UFSAR describes the design basis refueling accident. The postulated refueling accident involves a 30 foot drop of a fuel assembly on top of other fuel assemblies in the core during refueling operations. The drop distance bounds the maximum height that is allowed by the NMP1 refueling equipment and is the limiting case since it results in the maximum release of fission products to the reactor building. Damage due to a fuel assembly drop into the reactor vessel bounds a drop in the spent fuel pool. All fuel types currently stored in the spent fuel pool are bounded by this analysis. The refueling accident analysis is fully documented in Calculation H21C090 (see Attachment 8).

A1-4.1.5.1 Inputs and Assumptions

The key inputs and assumptions used in the AST Refueling Accident analysis are shown in Table A1-18. The X/Q values used for the analysis are summarized in Table A1-20. Additional information concerning the calculation of new atmospheric dispersion factors (X/Q values) is provided in Attachment (7). Because of the simplifying, conservative assumptions used, the radiological consequences of the design basis refueling accident were analyzed using a spreadsheet. The analysis followed the guidance of RG 1.183. The following assumptions were used in the analysis:

- The accident is assumed to occur at 24 hours after shutdown. Consequently, release activity inventories were calculated that correspond to this post-shutdown decay time. Fuel handling would not begin before 24 hours after shutdown.

- The activity inventory from two full fuel assemblies is released. This is bounding for the 125 damaged rods for GE 8x8 fuel assemblies or the 140 damaged rods for GE11 9x9 fuel assemblies determined for the current licensing basis (described in UFSAR Section XV-C.3.0).

- A core radial peaking factor of 1.8 is applied to the assembly inventory.

- The radionuclide inventory from the damaged fuel pins is assumed to be released to the environment instantaneously (even though this release could be assumed to occur over a two-hour period per RG 1.183). Thus, radioactive decay that would occur during a two-hour release period is neglected.

- The release to the environment is modeled as a ground level release, with no credit taken for secondary containment or release via the main stack.

- Even though the maximum fuel damage is for a drop in the refueling cavity onto the reactor core, a more conservative spent fuel pool decontamination factor (DF) for elemental iodine is used in the analysis. The minimum depth of water in the canal to the spent fuel pool is 22'-9". An adjusted DF was calculated as follows:

  With 23 feet of water, the DF for elemental iodine is 285. Assuming the relationship between the DF and the depth of water (d) is exponential (i.e., $DF_{eI} = e^{-c \times d}$), for DF_{eI} =285 and d = 23', c = -0.2458. Thus, with 22'-9" of water, DF_{eI} = 268.

- No DF is applied to noble gases.

- The DF for other radionuclides is assumed to be infinite, per RG 1.183.

- Filtration by the RBEVS and CRATS is not credited.

Since this event does not credit any safety systems in the determination of releases and consequences, single failures have no adverse effects on the analysis results.

The core inventories at 24 hours after shutdown were calculated by the RADDECAY code (Reference A1-8.16). The gap activity of noble gas and iodine (set at 99.85% elemental, 0.15% organic per RG 1.183) was added from the core to the gap. The RADDECAY calculation starts with time zero inventories for the noble gas and iodine isotopes. Given the activity (Ci or Ci/MWt) of an isotope at time zero,

RADDECAY calculates the curies or Ci/MWt of that isotope and its daughters at any subsequent time. To obtain the total curies of the isotope of interest, the curies resulting from its direct decay plus the curies resulting from decay in chains in which it is a daughter product must be added together. This adjustment has been made to the isotopes of interest, and the resulting fission product inventory is summarized in Table A1-19.

A1-4.1.5.2 Results

The radiological consequences for the postulated refueling accident are given in Table A1-21, along with the results from the current licensing basis source term analysis. As indicated in Table A1-21, the EAB, LPZ, and control room calculated doses remain well within the regulatory limits.

A1-4.1.6 Control Rod Drop Accident (CRDA)

Section XV-C.4.0 of the NMP1 UFSAR describes the design basis CRDA. This accident involves the rapid removal of the highest worth control rod from the core resulting in a reactivity excursion that encompasses the consequences of other postulated CRDAs. NMP1 is a banked position withdrawal sequence (BPWS) plant and the GESTAR generic CRDA analysis demonstrates that the accident does not result in fuel melting for BPWS plants (References A1-8.17 and A1-8.18). However, for the purpose of this analysis, fuel damage (i.e., cladding perforation) is assumed to occur. The NMP1 AST analysis for the CRDA considers two scenarios with regard to the activity release pathways, as follows:

Case 1: The activity that reaches the turbine/condenser is released via leakage to the environment.

Case 2: The activity that reaches the condenser is released via the mechanical vacuum pumps.

The control rod drop accident analysis is fully documented in Calculation H21C096 (see Attachment 8).

A1-4.1.6.1 Inputs and Assumptions

The key inputs and assumptions used in the AST CRDA analysis are shown in Table A1-22. A core radial peaking factor of 1.8 was used in the analysis. The X/Q values used for the analysis are summarized in Table A1-23.

For Case 1, leakage from the turbine/condenser at a rate of 1% per day for a period of 24 hours is assumed, at which time the leakage is assumed to terminate.

For Case 2, the maximum activity concentration that will not cause isolation of the mechanical vacuum pumps on a high main steam line radiation signal is assumed to be released via the main stack at the mechanical vacuum pump flow rate, and retention by the charcoal delay beds in the offgas system is neglected.

The radiological consequences were analyzed using a spreadsheet for Case 1 and the RADTRAD code for Case 2. The RADTRAD results were verified with the STARDOSE code. No credit was taken for operation of the CRATS or any other safety systems to mitigate the consequences of the event, and no single failures were considered.

A1-4.1.6.2 Results

The radiological consequences for the postulated CRDA are given in Table A1-24, along with the results from the current licensing basis source term analysis. As indicated, the EAB, LPZ, and control room calculated doses remain well within the regulatory limits.

A1-4.2 Suppression Pool pH Control

The AST LOCA analysis takes credit for minimization of re-evolution of elemental iodine from the suppression pool. Re-evolution is strongly dependent on suppression pool pH. An analysis determined that sodium pentaborate solution injection via the LPS must commence within approximately 1.5 hours of the onset of a LOCA. Using the assumptions of a minimum quantity and concentration of available sodium pentaborate solution (as specified in TS Section 3.1.2 and TS Figure 3.1.2b) and conservative modeling of primary containment cabling, the minimum suppression pool pH at 30 days post-LOCA remains above 7.0. This pH satisfies the conditions for inhibiting the release of the chemical form of elemental iodine from the suppression pool water.

Details of the AST analysis for suppression pool pH control are provided in Attachment (5). Based on the results of this analysis, the LPS will be credited for limiting radiological dose following LOCAs involving fuel damage.

A1-4.3 Atmospheric Dispersion Factors

New atmospheric dispersion factors (X/Q values) are calculated for use in evaluating the radiological consequences of the design basis accidents. Offsite exclusion area boundary (EAB) and low population zone (LPZ) X/Q values are calculated using the guidance of RG 1.145 (Reference A1-8.19) and the PAVAN computer code. Conservative estimates of X/Q values for accident releases (except the MSLB accident) to the NMP1 control room air intake and to the technical support center (TSC) air intake are calculated using the ARCON96 computer code, consistent with the procedures given in RG 1.194 (Reference A1-8.20). These calculations use meteorological data collected by the Nine Mile Point onsite meteorological measurements program for the five-year period from 1997 through 2001. For the MSLB accident, the control room air intake and the technical support center air intake X/Q values are determined using an instantaneous ground-level puff release model, as described in RG 1.194.

The resulting set of new control room intake, TSC intake, and offsite (EAB and LPZ) X/Q values represents a significant change from the values used in the current radiological design basis analyses. Additional information regarding the onsite meteorological measurement program, the X/Q calculation methodology, and the results of the new X/Q calculations is provided in Attachment (7). All input files for ARCON96 and PAVAN, including the meteorological data input files, are provided in Calculation H21C076 (see Attachment 8).

A1-4.4 NUREG-0737 Evaluation

An evaluation was performed to identify potential impacts of applying AST methodologies on the following NUREG-0737 (Reference A1-8.9) items:

<u>Item II.B.2, Post-Accident Vital Area Access</u>

The source terms (airborne activity in the reactor building and suppression pool water) for the doses in areas where access is required post-accident were evaluated to assess the impact of AST. The evaluation

determined that the existing TID-14844 based analyses are conservative and bounding. Given compliance with the GDC-19 limit of 5 Rem when dose is based on TID-14844 source terms, compliance with 10 CFR 50.67 control room dose limits can be expected with the AST-based analysis. Therefore, the historically analyzed cases are sufficient and no additional analysis of vital areas is necessary. In addition, no new post-accident access requirements have been identified as a result of implementing AST.

Items III.A.1.2 and III.D.3.4, Control Room and Technical Support Center Habitability

The control room radiological dose impact of AST has been specifically calculated for each of the four DBAs analyzed for AST implementation, and TSC habitability has been analyzed for the DBA LOCA. The results of these analyses are presented in Section A1-4.1 above.

Item III.D.1.1, Primary Coolant Outside Containment

The contribution to the radiological dose consequences resulting from piping shine and post-LOCA ESF leakage was considered as part of the radiological dose analysis for the LOCA. The results of the LOCA analysis are presented in Section A1-4.1.3 above.

A1-4.5 Proposed Revisions to the Technical Specifications

This section provides the justification for the proposed revisions to the TS that are associated with the licensing basis revision to implement the AST. The AST analyses described in the preceding discussions and the enclosed calculations support these changes. Attachment (2) provides the existing TS pages marked-up to show the proposed changes.

A1-4.5.1 TS Section 1.0, Definitions

Dose Equivalent I-131

Proposed new Definition 1.16, "Dose Equivalent I-131," is added. The new definition conforms to the implementation of AST. The revised accident analyses use committed effective dose equivalent dose conversion factors from Table 2.1 of Federal Guidance Report (FGR) 11. This reference is cited in RG 1.183.

With the implementation of AST, the previous whole body and thyroid dose guidelines of 10 CFR 100.11 and 10 CFR 50, Appendix A, GDC 19, are replaced by the total effective dose equivalent (TEDE) criteria of 10 CFR 50.67(b)(2). The analyses performed in support of this license amendment request determined radiological consequences in terms of the TEDE dose quantity and were shown to be in compliance with the dose criteria of 10 CFR 50.67. This new definition is acceptable since it reflects adoption of the dose conversion factors and dose consequences of the revised radiological analyses.

Recently Irradiated Fuel

Proposed new Definition 1.17, "Recently Irradiated Fuel," is added. Recently irradiated fuel is fuel that has occupied part of a critical reactor core within the previous 24 hours (i.e., reactor fuel that has decayed less than 24 hours following reactor shutdown). The new definition is consistent with the AST analysis for the Refueling Accident, which assumes a post-shutdown 24-hour decay period to determine the release activity inventory.

A1-4.5.2 TS Section 3.1.2, Liquid Poison System

The operability requirements for the LPS are revised to include both the power operating and whenever the reactor coolant system temperature is greater than 212°F (except for reactor vessel hydrostatic or leakage testing with the reactor not critical). This change ensures that the SLC system is operable for all plant conditions when the reactor coolant system is above 212°F (other than reactor vessel hydrostatic or leakage testing with the reactor not critical), such that the system is available to maintain the suppression pool pH above 7.0, consistent with the AST methodology and analysis assumptions.

The exception for reactor vessel hydrostatic or leakage testing with the reactor not critical is consistent with analyses that were performed for License Amendment No. 170 issued by NRC letter dated February 20, 2001 (Reference A1-8.8). The purpose of License Amendment 170 was to allow performance of reactor vessel hydrostatic or leakage tests, control rod scram time tests, and excess flow check valve tests when reactor coolant temperature is greater than 215°F, the reactor is not critical, and primary containment integrity has not been established. The analyses performed for this license amendment considered a large reactor coolant system line break occurring during the subject testing. For this event, fuel failure was not postulated. Thus, operation of the LPS to control suppression pool pH is not required during the subject testing conditions.

The "Objective" statement in TS 3.1.2 is revised to reflect the new post-LOCA function of the LPS. This is an administrative change.

A1-4.5.3 TS Section 3.2.4, Reactor Coolant Activity Limit

The reactor coolant radioactivity concentration limit specified in TS Section 3.2.4.a is revised from 9.47 microcuries of total iodine per gram of water to 0.2 μCi/gm Dose Equivalent I-131. In addition, proposed new TS Section 3.2.4.b allows operation to continue for up to 48 hours if reactor coolant activity exceeds 0.2 μCi/gm but is less than or equal to 4.0 μCi/gm Dose Equivalent I-131. These revisions are consistent with the reactor coolant specific activity assumed in the MSLB accident analysis described in Section A1-4.1.4 above. The MSLB accident analysis uses a source term based on the maximum short-term reactor coolant specific activity of 4.0 μCi/gm Dose Equivalent I-131 and results in calculated radiological consequences that are below the applicable acceptance values. The AST analyses have determined that the MSLB accident is more limiting than the previously-analyzed small-break LOCA outside of primary containment that was the basis for the current TS reactor coolant activity limit of 9.47 microcuries of total iodine per gram of water.

From the TS requirement and safety perspective, the new limit is more conservative than the existing requirement. Review of recent operating experience indicates that the reactor coolant specific activity remains well below the proposed revised limit; therefore, achieving the more restrictive limit will not create an undue hardship.

A1-4.5.4 TS Sections 3.2.4 and 4.2.4, Reactor Coolant Activity

The limiting conditions for operation in TS Section 3.2.4 and the surveillance requirements in TS Section 4.2.4 are updated in a manner that is similar to the Standard Technical Specifications (STS, NUREG-1433, Revision 3), as follows:

Applicable Operating Conditions

The applicability of the requirements of TS Section 3.2.4.a are revised from "all operating conditions" (stated under "Applicability" for TS Section 3.2.4) to "during the power operating and hot shutdown conditions" (stated in the proposed revision to TS Section 3.2.4.a). Current TS Section 3.2.4 is applicable for all operating conditions. In the proposed revised TS, applicability of the reactor coolant specific activity limit is limited to the power operating and hot shutdown conditions. These are the operating conditions that represent a potential for release of significant quantities of radioactive coolant to the environment. The cold shutdown, refueling, and major maintenance conditions are omitted since the reactor is not pressurized and the potential for leakage is significantly reduced.

Limiting Conditions for Operation

Current TS Section 3.2.4.b, which requires shutdown of the plant if the reactor coolant activity limit is exceeded, is replaced with two new specifications and associated actions:

a. Proposed new TS Section 3.2.4.b allows operation to continue for up to 48 hours, with sample analysis frequency increased to once every 4 hours, if reactor coolant activity exceeds 0.2 μCi/gm but is less than or equal to 4.0 μCi/gm Dose Equivalent I-131. The 48 hour completion time to restore the activity level provides a reasonable time for temporary coolant activity increases (iodine spikes or crud bursts) to be cleaned up with the normal processing systems. More frequent monitoring is warranted to discern between these temporary increases and gross fuel failures.

b. Proposed new TS Section 3.2.4.c requires shutdown of the plant if reactor coolant activity cannot be restored to less than or equal to 0.2 μCi/gm Dose Equivalent I-131 within 48 hours, or if at any time it exceeds 4.0 μCi/gm. With the unit in the cold shutdown condition, the requirements of the reactor coolant activity specification are no longer applicable since the reactor is not pressurized and the potential for leakage is significantly reduced. The allowed completion times for placing the unit in the hot shutdown and cold shutdown conditions are reasonable, based on operating experience, to achieve the required plant conditions from full power conditions in an orderly manner without challenging plant systems.

Revised Coolant Activity Limit for Reactor Vessel Hydrostatic or Leakage Test Conditions

The radioiodine concentration limit stated in current TS Section 3.2.4.c is revised from 1.5 microcuries of total iodine per gram of water to 0.2 μCi/gm Dose Equivalent I-131. This TS section is renumbered as 3.2.4.d. The associated surveillance requirement, current TS Section 4.2.4.c, is also revised accordingly. This limit was added by License Amendment No. 170 issued by NRC letter dated February 20, 2001 (Reference A1-8.8). The purpose of License Amendment 170 was to allow performance of reactor vessel hydrostatic or leakage tests, control rod scram time tests, and excess flow check valve tests when reactor coolant temperature is greater than 215°F, the reactor is not critical, and primary containment integrity has not been established. Justification for this license amendment included an analysis of the radiological consequences of a large reactor coolant system line break during the subject tests, assuming a ground-level puff release and no credit for operation of the control room air treatment system. The analysis concluded that limiting the reactor coolant activity to 1.5 microcuries of total iodine per gram of water would result in calculated control room and offsite doses that were within the acceptance guidelines of 10 CFR 100 for offsite doses and 10 CFR 50, Appendix A, GDC 19 for control room doses, and that were bounded by the doses calculated for a main steam line break outside of primary containment.

The subject analysis has been re-evaluated using the revised reactor coolant radioactivity concentration limit of 0.2 μCi/gm Dose Equivalent I-131. This evaluation demonstrates that the radiological consequences a large reactor coolant system line break during reactor vessel hydrostatic or leakage testing conditions continue to be bounded by the doses calculated for a main steam line break outside of primary containment. Therefore, maintaining the reactor coolant radioactivity concentration less than or equal to 0.2 μCi/gm Dose Equivalent I-131 during reactor vessel hydrostatic or leakage testing conditions is acceptable. Though this limit is identical to the value that is proposed for the power operating and hot shutdown conditions (TS Section 3.2.4.a), the separate TS requirement is retained due to the specific conditions of its applicability.

Gross Gamma Activity Surveillance Deletion

Current TS Section 4.2.4.a, which requires analysis of reactor coolant samples for gross gamma activity at least every 96 hours, is deleted. Current TS Section 3.2.4 does not contain any limits for reactor coolant gross gamma activity. However, current TS Section 3.6.15, "Main Condenser Offgas," and the associated surveillance requirements in TS Section 4.6.15, require that for the main condenser, the gross radioactivity (beta and/or gamma) rate of noble gases measured at the offgas system recombiner discharge be limited to less than or equal to 500,000 μCi/second. The Bases for current TS Sections 3.6.15 and 4.6.15 state that restricting the gross radioactivity rate of noble gases from the main condenser provides assurance that the total body exposure to an individual at the EAB will not exceed a very small fraction of the limits of 10 CFR 100 in the event this effluent is inadvertently discharged directly to the environment without treatment. The Bases go on to state that the primary purpose of providing this specification is to limit buildup of fission product activity within the station systems which would result if high fuel leakage were to be permitted over extended periods.

The requirements of current TS Sections 3.6.15 and 4.6.15 provide reasonable assurance that the reactor coolant gross activity is maintained at a sufficiently low level to preclude doses from exceeding the applicable acceptance limits in the event of a MSLB outside of primary containment or failure of a small line carrying reactor coolant outside of primary containment. Therefore, TS Section 4.2.4.a is redundant and places an unnecessary burden on the licensee without a commensurate increase in the margin of safety. Elimination of TS Section 4.2.4.a will allow plant personnel to focus attention on safe, efficient operation of the plant without the unnecessary distraction of the redundant surveillance requirement.

Specific Activity Verification Surveillance Frequency

Current TS Section 4.2.4.b is revised to require verification that reactor coolant Dose Equivalent I-131 specific activity is less than or equal to 0.2 μCi/gm. This wording replaces the existing wording of TS Section 4.2.4.b, which states "isotopic analyses shall be performed" without indicating the purpose for performing these analyses. This is an administrative change that more clearly indicates the purpose of performing the surveillance (i.e., to verify that the reactor coolant specific activity is within the specified limit).

The frequency of verifying that the reactor coolant is within the limit is revised from "once per month" to "once per 7 days," and performance of this surveillance is limited to the power operating condition only. Increasing the frequency of sampling and analysis of the reactor coolant for Dose Equivalent I-131 provides additional assurance that the radiological consequences of a MSLB accident remain within the applicable acceptance limits. The proposed changes to TS Section 4.2.4.b also specify that performance of the surveillance is required only when the unit is in the power operating condition. This is consistent with the STS and is acceptable because the level of fission products generated when in other operating conditions is much less than during the power operating condition.

Administrative Changes

Editorial changes and revised section numbering have been incorporated to reflect the proposed reactor coolant activity TS changes. These revisions do not result in any technical changes (either actual or interpretational).

A1-4.5.5 TS Section 3.3.3, Leakage Rate

Under the heading "Objective," reference is made to 10 CFR 100 with regard to post-LOCA radiation exposure to the public. The proposed change replaces the reference to 10 CFR 100 with 10 CFR 50.67. With implementation of the AST, the accident whole body and thyroid dose guidelines of 10 CFR 100 are replaced by the TEDE criteria of 10 CFR 50.67. Thus, the reference to 10 CFR 100 is replaced with 10 CFR 50.67.

A1-4.5.6 TS Section 3.4.0, Reactor Building

TS Section 3.4.0 is revised to delete the requirement that reactor building integrity be in effect during the refueling condition, replace the term "irradiated fuel" with "recently irradiated fuel," and add "during operations with a potential for draining the reactor vessel (OPDRVs)" as a condition when reactor building integrity must be in effect. Analysis of the radiological consequences of the design basis Refueling Accident using AST methodology involving irradiated fuel assemblies that have been allowed to decay for at least 24 hours shows that the calculated TEDE values both offsite (EAB and LPZ) and to control room occupants are below the applicable acceptance values (see Section A1-4.1.5 above). This analysis does not credit secondary containment integrity or operation of the RBEVS, the reactor building isolation valves, or the CRATS. Thus, after 24 hours of decay time, movement of irradiated fuel assemblies can commence and continue without secondary containment integrity and without operability of the RBEVS, the reactor building isolation valves, or the CRATS.

A new requirement that reactor building integrity be in effect during OPDRVs is being added, since OPDRVs are refueling activities that can be postulated to cause fission product release different than the Refueling Accident. Since secondary containment is the only barrier to the release of fission products into the environment during OPDRVs, reactor building integrity as defined in TS Definition 1.12 is required. In accordance with this definition, at least one door in each access opening must be closed (per TS Section 3.4.3), the RBEVS must be operable (per TS Section 3.4.4), and all reactor building ventilation automatic isolation valves must be operable or secured in the closed position (per TS Section 3.4.2). Similarly, the CRATS (TS Section 3.4.5) is required to be operable to assure control room habitability during OPDRVs. TS Sections 3.4.2, 3.4.3, 3.4.4, and 3.4.5 are also revised to add operability requirements for OPDRVs.

The NMPNS shutdown safety procedure presently includes guidance on equipment availability during shutdown and contingency planning, as well as the requirements contained in the licensing and design basis. In addition to the conservatisms contained within the Refueling Accident analysis, as a defense-in-depth measure, revisions to the shutdown safety procedure will be incorporated prior to completing implementation of the AST license amendment to address the following attributes:

- Specify that during fuel handling/core alterations, the ability to filter and monitor any release should be maintained. In particular, the RBEVS and its associated radiation monitors should be available but are not required to be operable.

- Specify that the ability to restore secondary containment capability during fuel handling/core alterations should be maintained. A contingency method to immediately initiate action to close any external openings in the secondary containment should be developed.

- Specify that, when necessary, the Shift Manager will ensure that the necessary actions are taken to close all external openings in the secondary containment.

These revisions will assure that actions are taken to reduce the potential radiological consequences of a Refueling Accident. Similar revisions have previously been incorporated into the shutdown safety procedure for Nine Mile Point Unit 2 (NMP2) to implement License Amendment No. 101 (issued by NRC letter dated February 11, 2002 - Reference A1-8.21), which revised the NMP2 TS consistent with NRC-approved TSTF-51. The shutdown safety procedure revisions for NMP2 were made to address the provisions of Section 11.3.6.5 of NUMARC 93-01, Revision 3 (Reference A1-8.22), consistent with TSTF-51.

A1-4.5.7 <u>TS Section 3.4.1, Leakage Rate; TS Section 3.4.2, Reactor Building Integrity – Isolation Valves; TS Section 3.4.3, Access Control; and TS Section 3.4.4, Emergency Ventilation System</u>

TS Sections 3.4.1, 3.4.2, and 3.4.3 are revised to uniformly indicate that the requirements specified in these sections must be met "at all times when secondary containment integrity is required," consistent with the applicability requirements stated in TS Section 3.4.4. This change establishes consistency between these sections, all of which relate to secondary containment integrity, and eliminates repetition. As indicated in revised TS Section 3.4.0, reactor building (i.e., secondary containment) integrity, and thus the requirements of TS Sections 3.4.1, 3.4.2, 3.4.3, and 3.4.4, must be in effect for the following conditions: (1) the power operating condition, (2) when the reactor water temperature is above 215°F, (3) whenever recently irradiated fuel or an irradiated fuel cask is being handled in the reactor building, and (4) during OPDRVs. As noted above, analysis of the radiological consequences of the design basis Refueling Accident using AST methodology involving irradiated fuel assemblies that have been allowed to decay for at least 24 hours shows that the calculated TEDE values both offsite (EAB and LPZ) and to control room occupants are below the applicable acceptance values (see Section A1-4.1.5 above). This analysis does not credit secondary containment integrity, operation of the RBEVS, or operation of the reactor building isolation valves. Thus, after 24 hours of decay time, movement of irradiated fuel assemblies can commence and continue without secondary containment integrity and without operability of the RBEVS or the reactor building isolation valves. In addition, as noted in Section A1-4.5.6 above, administrative controls will be in place to effectively close the secondary containment in the event of a Refueling Accident, thereby reducing the potential radiological consequences.

As noted in Section A1-4.5.6 above, OPDRVs is being added as a new applicable condition for TS Sections 3.4.1, 3.4.2, 3.4.3, and 3.4.4, since OPDRVs are refueling activities that can be postulated to cause fission product release different than the Refueling Accident. In addition, the action statements contained in TS Sections 3.4.1.a, 3.4.2.b, 3.4.3.b, and 3.4.4.e are revised to more clearly distinguish the actions to be taken during reactor operation versus those to be taken when handling recently irradiated fuel or an irradiated fuel cask in the reactor building, or during OPDRVs. These clarifications do not make any of the existing TS action requirements less restrictive.

TS Section 3.4.3, item b.2.a (which refers to "core alterations") is deleted. Core alterations are defined in NMP1 TS Definition 1.13 as "the addition, removal, relocation, or other manual movement of fuel or control rods in the reactor core." Accidents postulated to occur during core alterations, in addition to the Refueling Accident, are inadvertent criticality due to a control rod removal error and the inadvertent

loading of, and subsequent operation with, a fuel assembly loaded into an improper position (i.e., mislocated or misoriented). These events are not postulated to result in fuel cladding damage and thus are bounded by the design basis Refueling Accident. Therefore, deletion of the reference to "core alterations" in TS Section 3.4.3 is acceptable.

A1-4.5.8 TS Section 3.4.5, Control Room Air Treatment System (CRATS)

TS Section 3.4.5 is revised to delete the requirement for operability of the CRATS during the refueling condition, replace the term "irradiated fuel" with "recently irradiated fuel," and add "during operations with a potential for draining the reactor vessel (OPDRVs)" as a new condition for which the CRATS must be operable. Analysis of the radiological consequences of the design basis Refueling Accident using AST methodology involving irradiated fuel assemblies that have been allowed to decay for at least 24 hours shows that the calculated TEDE values both offsite (EAB and LPZ) and to control room occupants are below the applicable acceptance values (see Section A1-4.1.5 above). This analysis does not credit operation of the CRATS. Thus, after 24 hours of decay time, movement of irradiated fuel assemblies can commence and continue without the CRATS being operable. In addition, as noted in Section A1-4.5.6 above, administrative controls will be in place to effectively close the secondary containment in the event of a Refueling Accident, thereby reducing the potential consequences.

As noted in Section A1-4.5.6 above, a new requirement that the CRATS be operable during OPDRVs is being added, since OPDRVs are refueling activities that can be postulated to cause fission product release different than the Refueling Accident. In addition, the action statements contained in TS Sections 3.4.5.e and 3.4.5.f are revised to more clearly distinguish the actions to be taken during reactor operation versus those to be taken when handling recently irradiated fuel or an irradiated fuel cask in the reactor building or during OPDRVs. These clarifications do not make any of the existing TS action requirements less restrictive.

A1-4.5.9 TS Table 3.6.2j, Emergency Ventilation Initiation

TS Table 3.6.2j addresses instrumentation that automatically initiates operation of the RBEVS and closure of the reactor building isolation valves. Note (a) to TS Table 3.6.2j, which applies to the High Radiation Refueling Platform instrumentation, is revised by replacing the term "irradiated fuel" with "recently irradiated fuel," and adding "during operations with a potential for draining the reactor vessel (OPDRVs)" as a condition when the instrumentation must be operable. In addition, the requirement that the High Radiation Reactor Building Ventilation Duct instrumentation be operable in the Refuel mode of operation is replaced by Note (a) requiring that this instrumentation be operable whenever recently irradiated fuel or an irradiated fuel cask is being handled in the reactor building, and during operations with a potential for draining the reactor vessel (OPDRVs). The proposed revisions are consistent with the revised secondary containment and RBEVS operability requirements described in Sections A1-4.5.6 and A1-4.5.7 above; i.e., the initiation instrumentation is required to be operable for the same conditions as the RBEVS and the reactor building isolation valves.

A1-4.5.10 TS Bases Changes

With implementation of the AST, the accident whole body and thyroid dose guidelines of 10 CFR Part 50, Appendix A, GDC 19 and 10 CFR 100 are replaced by the TEDE criteria of 10 CFR 50.67. Thus, references to GDC 19 and 10 CFR 100 are replaced with 10 CFR 50.67.

Other changes are being made to the TS Bases for clarity and to conform to the changes being made to the associated TS sections. The revisions to the TS Bases incorporate supporting information for the

proposed TS changes. The Bases do not establish actual requirements, and as such do not change technical requirements of the TS. The Bases changes are therefore acceptable, since they administratively document the reasons and provide additional understanding for the associated TS requirements. The TS Bases changes will be processed in accordance with the NMP1 TS Bases Control Program (TS Section 6.5.6).

A1-4.5 Conclusions

Implementation of the AST as the plant radiological consequences analysis licensing basis requires a license amendment pursuant to the requirements of 10 CFR 50.67. The analyses described above demonstrate that the offsite and control room post-accident doses will not exceed the values specified in 10 CFR 50.67 following AST implementation. It has also been determined that continued compliance with NUREG-0737, Item II.B.2, will be maintained and that vital areas remain accessible post-accident. Implementation of the AST provides the basis for proposed changes to the Technical Specifications described herein and for deletion of Renewed Operating License Condition 2.C.(3). This submittal also fulfills the NMPNS commitment for completing and submitting the analysis needed to meet Generic Letter 2003-01 objectives.

Based on the considerations discussed above and detailed in the attachments and enclosures to this submittal, (1) there is reasonable assurance that the health and safety of the public will not be endangered by operation in the proposed manner; (2) such activities will be conducted in compliance with the Commission's regulations; and (3) the issuance of the requested license amendment will not be inimical to the common defense and security or to the health and safety of the public.

A1-5. NO SIGNIFICANT HAZARDS DETERMINATION

Nine Mile Point Nuclear Station, LLC (NMPNS) is requesting a revision to Renewed Operating License No. DPR-63 for Nine Mile Point Unit 1 (NMP1). The proposed amendment would revise the accident source term used in the NMP1 design basis radiological consequence analyses in accordance with 10 CFR 50.67. The proposed accident source term revision replaces the current methodology that is based on TID-14844, "Calculation of Distance Factors for Power and Test Reactor Sites," with the alternative source term (AST) methodology described in Regulatory Guide 1.183, "Alternative Source Terms for Evaluating Design Basis Accidents at Nuclear Power Reactors." The proposed license amendment request is for full implementation of the AST as described in Regulatory Guide 1.183, with the exception that TID-14844 will continue to be used as the radiation dose basis for equipment qualification and vital area access.

The AST analyses were performed using the guidance provided in Regulatory Guide 1.183 and Standard Review Plan Section 15.0.1, "Radiological Consequence Analyses Using Alternative Source Terms." The four limiting design basis accidents (DBAs) considered were the Loss of Coolant Accident (LOCA), the Main Steam Line Break Accident, the Refueling Accident, and the Control Rod Drop Accident.

NMPNS has evaluated whether or not a significant hazards consideration is involved with the proposed amendment by focusing on the three standards set forth in 10 CFR 50.92, "Issuance of amendment," as discussed below:

1. Does the proposed change involve a significant increase in the probability or consequences of an accident previously evaluated?

   Response: No.

   Adoption of the AST and those plant systems affected by implementing AST do not initiate DBAs. The AST does not affect the design or manner in which the facility is operated; rather, for postulated accidents, the AST is an input to calculations that evaluate the radiological consequences. The AST does not by itself affect the post-accident plant response or the actual pathway of the radiation released from the fuel. It does, however, better represent the physical characteristics of the release, so that appropriate mitigation techniques may be applied. Implementation of the AST has been incorporated in the analyses for the limiting DBAs at NMP1.

   The structures, systems and components affected by the proposed change mitigate the consequences of accidents after the accident has been initiated. Application of the AST does result in changes to NMP1 Updated Final Safety Analysis Report (UFSAR) functions (e.g., Liquid Poison system). As a condition of application of AST, NMPNS is proposing to use the Liquid Poison system to control the suppression pool pH following a LOCA. The proposed changes also revise operability requirements for the secondary containment and certain post-accident filtration systems while handling irradiated fuel that has decayed for greater than 24 hours and during core alterations. These changes have been included within the AST evaluations. These changes do not require any physical changes to the plant. As a result, the proposed changes do not involve a revision to the parameters or conditions that could contribute to the initiation of a DBA discussed in Chapter XV of the NMP1 UFSAR. Since design basis accident initiators are not being altered by adoption of the AST, the probability of an accident previously evaluated is not affected.

Plant-specific AST radiological analyses have been performed and, based on the results of these analyses, it has been demonstrated that the dose consequences of the limiting events considered in the analyses are within the acceptance criteria provided by the NRC for use with the AST. These criteria are presented in 10 CFR 50.67 and Regulatory Guide 1.183. Even though the AST dose limits are not directly comparable to the previously specified whole body and thyroid dose guidelines of General Design Criterion 19 and 10 CFR 100.11, the results of the AST analyses have demonstrated that the 10 CFR 50.67 limits are satisfied. Therefore, it is concluded that adoption of the AST does not involve a significant increase in the consequences of an accident previously evaluated.

Based on the above discussion, it is concluded that the proposed changes do not involve a significant increase in the probability or consequences of an accident previously evaluated.

2. Does the proposed change create the possibility of a new or different kind of accident from any accident previously evaluated?

Response: No.

Implementation of AST and the proposed changes does not alter or involve any design basis accident initiators. These changes do not involve any physical changes to the plant and do not affect the design function or mode of operations of systems, structures, or components in the facility prior to a postulated accident. Since systems, structures, and components are operated essentially no differently after the AST implementation, no new failure modes are created by this proposed change.

Therefore, the proposed changes do not create the possibility of a new or different kind of accident from any accident previously evaluated.

3. Does the proposed change involve a significant reduction in a margin of safety?

Response: No.

The changes proposed are associated with a new licensing basis for analysis of NMP1 DBAs. Approval of the licensing basis change from the original source term to the AST is being requested. The results of the accident analyses performed in support of the proposed changes are subject to revised acceptance criteria. The limiting DBAs have been analyzed using conservative methodologies, in accordance with the guidance contained in Regulatory Guide 1.183, to ensure that analyzed events are bounding and that safety margin has not been reduced. The dose consequences of these limiting events are within the acceptance criteria presented in 10 CFR 50.67 and Regulatory Guide 1.183. Thus, the proposed changes continue to ensure that the doses at the exclusion area boundary and low population zone boundary, as well as in the control room, are within corresponding regulatory criteria.

Therefore, by meeting the applicable regulatory criteria for AST, it is concluded that the proposed changes do not involve a significant reduction in a margin of safety.

Based on the above, NMPNS concludes that the proposed amendment presents no significant hazards considerations under the standards set forth in 10 CFR 50.92(c), and, accordingly, a finding of "no significant hazards consideration" is justified.

A1-6. ENVIRONMENTAL ASSESSMENT

A review has determined that the proposed amendment would change a requirement with respect to installation or use of a facility component located within the restricted area, as defined in 10 CFR 20, or would change an inspection or surveillance requirement. However, the proposed amendment does not involve (i) a significant hazards consideration, (ii) a significant change in the types or significant increase in the amounts of any effluent that may be released offsite, or (iii) a significant increase in individual or cumulative occupational radiation exposure. Accordingly, the proposed amendment meets the eligibility criterion for categorical exclusion set forth in 10 CFR 51.22(c)(9). Therefore, pursuant to 10 CFR 51.22(b), no environmental impact statement or environmental assessment need be prepared in connection with the proposed amendment.

A1-7. PRECEDENT

Other BWRs have previously submitted, and the NRC has approved, applications for the use of AST using approaches similar to those described in this submittal for NMP1. These include Vermont Yankee Nuclear Power Station (TAC No. MC0253, approved March 29, 2005), Browns Ferry Nuclear Plant (TAC Nos. MB5733, MB5734, MB5735, approved September 27, 2004), and Limerick Generating Station (TAC Nos. MC2295 and MC2296, approved August 23, 2006).

A1-8. REFERENCES

1. Letter from W. C. Holston (NMPNS) to Document Control Desk (NRC), dated January 31, 2005, Response to Generic Letter 2003-01, Control Room Habitability (TAC Nos. MB9825, MB9826)

2. Letter from T. J. O'Connor (NMPNS) to Document Control Desk (NRC), dated January 27, 2006, Response to NRC Generic Letter 2003-01, Control Room Habitability – Commitment Completion Date Change (TAC Nos. MB9825 and MB9826)

3. NRC Regulatory Guide 1.183, "Alternative Radiological Source Terms for Evaluating Design Basis Accidents at Nuclear Power Reactors," July 2000

4. J. J. DiNunno et al., Technical Information Document (TID)-14844, "Calculation of Distance Factors for Power and Test Reactor Sites," U.S. Atomic Energy Commission (now USNRC), 1962

5. Technical Specification Task Force (TSTF) Improved Standard Technical Specifications Change Traveler TSTF-51-A, "Revise Containment Requirements During Handling Irradiated Fuel and Core Alterations," Revision 2

6. L. Soffer et al., NUREG-1465, "Accident Source Terms for Light-Water Nuclear Power Plants," USNRC, February 1995

7. NUREG-0800, Standard Review Plan, Section 15.0.1, "Radiological Consequence Analyses Using Alternative Source Terms," Rev. 0, July 2000

8. Letter from P. S. Tam (NRC) to J. H. Mueller (NMPC), dated February 20, 2001, Nine Mile Point Nuclear Station Unit No. 1 – Issuance of Amendment Re: Primary Containment Integrity (TAC No. MB0090)

9. NUREG-0737, "Clarification of TMI Action Plan Requirements," November 1980

10. ORIGEN2 Computer Code, Oak Ridge National Laboratory

11. NUREG/CR-6604, "RADTRAD: A simplified Model for Radionuclide Transport and Removal and Dose Estimation," April 1998, and Supplement 1, June 8, 1999

12. STARDOSE Model Report, Polestar Applied Technology, Inc., January 31, 1997

13. MicroShield, Version 5.0.3, Grove Engineering Inc.

14. QADMOD, Version 0, Level 3, Oak Ridge National Laboratory

15. STARNAUA Code, Polestar Applied Technology, Inc.

16. RADDECAY, Version 3, Grove Engineering, Inc.

17. NEDE-24011-P-A-14, "General Electric Standard Application for Reactor Fuel (GESTAR II)," U. S. Supplement, June 2000

18. NEDE-24011-P-A (GESTAR-II), Amendment 22

19. NRC Regulatory Guide 1.145, "Atmospheric Dispersion Models for Potential Accident Consequence Assessments at Nuclear Power Plants," Revision 1, November 1982

20. NRC Regulatory Guide 1.194, "Atmospheric Relative Concentrations for Control Room Radiological Habitability Assessments at Nuclear Power Plants," June 2003

21. Letter from P. S. Tam (NRC) to J. T. Conway (NMPNS), dated February 11, 2002, Nine Mile Point Nuclear Station, Unit No. 2 – Issuance of Amendment Re: Ventilation Requirements during Irradiated Fuel Handling (TAC No. MB1479)

22. NUMARC 93-01, "Industry Guideline for Monitoring the Effectiveness of Maintenance at Nuclear Power Plants," Revision 3, July 2000

23. Letter from J. K. Thayer (Entergy Nuclear Vermont Yankee, LLC) to Document Control Desk (NRC) dated July 31, 2003, Technical Specification Proposed Change No. 262, Alternative Source Term (TAC No. MC0253)

24. Letter from T. E. Abney (Tennessee Valley Authority) to Document Control Desk (NRC), dated July 31, 2002, Browns Ferry Nuclear Plant (BFN) – Units 1, 2, and 3 – License Amendment - Alternative Source Term (TAC Nos. MB5733, MB5734, MB5735, MC0156, MC0157, MC0158)

25. Letter from J. H. Mueller (Niagara Mohawk Power Corporation) to Document Control Desk (NRC), dated December 18, 1998, Regarding Nine Mile Point Unit 1 Control Room Habitability

26. NUREG/CR-5732, "Iodine Chemical Forms in LWR Severe Accidents," Oak Ridge National Laboratory, April 1992

27. NUREG-0800, Standard Review Plan, Section 6.5.2, "Containment Spray as a Fission Product Cleanup System," Revision 1, July 1981

28. NUREG-1433, "Standard Technical Specifications – General Electric Plants, BWR/4," Rev. 3, June 2004

A1-9. REGULATORY COMMITMENTS

The following table identifies those actions committed to by NMPNS in this submittal. Any other statements in this submittal are provided for information purposes and are not considered to be regulatory commitments.

REGULATORY COMMITMENTS	DUE DATE
The NMPNS shutdown safety procedure will be revised to address the following attributes for Nine Mile Point Unit 1: • Specify that during fuel handling/core alterations, the ability to filter and monitor any release should be maintained. In particular, the RBEVS and its associated radiation monitors should be available but are not required to be operable. • Specify that the ability to restore secondary containment capability during fuel handling/core alterations should be maintained. A contingency method to immediately initiate action to close any external openings in the secondary containment should be developed. • Specify that, when necessary, the Shift Manager will ensure that the necessary actions are taken to close all external openings in the secondary containment.	120 days following NRC approval of the license amendment request.
Environmental qualification for the LPS components located in a harsh environment will be established in accordance with the station design change process prior to completing implementation of the AST license amendment.	120 days following NRC approval of the license amendment request.
The Emergency Operating Procedures (EOPs) and Severe Accident Procedures (SAPs) will be revised, as appropriate, to reflect the post-LOCA function of the LPS and to assure that, once initiated, the entire contents of the LPS storage tank are injected to accomplish the suppression pool pH control function.	120 days following NRC approval of the license amendment request.
Training will be provided to licensed operators and shift technical advisors (STAs) for the procedure revisions that specifically address sodium pentaborate solution injection for pH control following a LOCA.	120 days following NRC approval of the license amendment request.

Table A1-1
Conformance with Regulatory Guide (RG) 1.183
Section C, Regulatory Position

RG Section	RG Position	NMP1 Analysis	Comments
3.1	The inventory of fission products in the reactor core and available for release to the containment should be based on the maximum full power operation of the core with, as a minimum, current licensed values for fuel enrichment, fuel burnup, and an assumed core power equal to the current licensed rated thermal power times the ECCS evaluation uncertainty. The period of irradiation should be of sufficient duration to allow the activity of dose-significant radionuclides to reach equilibrium or to reach maximum values. The core inventory should be determined using an appropriate isotope generation and depletion computer code such as ORIGEN 2 or ORIGEN-ARP. Core inventory factors (Ci/MWt) provided in TID 14844 and used in some analysis computer codes were derived for low burnup, low enrichment fuel and should not be used with higher burnup and higher enrichment fuels.	Conforms	The inventory of fission products in the core is based on the licensed reactor core thermal power of 1850 MWt plus 2% (i.e., 1887 MWt). ORIGEN2 was used to determine core inventory, based on a 24-month fuel cycle, 1400 EFPD per cycle, and 4.1% average enrichment.
3.1	For the DBA LOCA, all fuel assemblies in the core are assumed to be affected and the core average inventory should be used. For DBA events that do not involve the entire core, the fission product inventory of each of the damaged fuel rods is determined by dividing the total core inventory by the number of fuel rods in the core. To account for differences in power level across the core, radial peaking factors from the facility's core operating limits report (COLR) or technical specifications should be applied in determining the inventory of the damaged rods.	Conforms	A bounding peaking factor of 1.8 is used for DBA events that do not involve the entire core, with fission product inventories for damaged fuel rods determined by dividing the total core inventory by the number of fuel rods in the core.

Table A1-1
Conformance with Regulatory Guide (RG) 1.183
Section C, Regulatory Position

RG Section	RG Position	NMP1 Analysis	Comments
3.1	No adjustment to the fission product inventory should be made for events postulated to occur during power operations at less than full rated power or those postulated to occur at the beginning of core life. For events postulated to occur while the facility is shutdown, e.g., a fuel handling accident, radioactive decay from the time of shutdown may be modeled.	Conforms	No adjustments for less than full power are made in any analyses. The refueling accident models radioactive decay from the time of shutdown.
3.2	The core inventory release fractions, by radionuclide groups, for the gap release and early in-vessel damage phases for DBA LOCAs are listed in Table 1 for BWRs and Table 2 for PWRs. These fractions are applied to the equilibrium core inventory described in Regulatory Position 3.1. Footnote 10 to Position 3.2: The release fractions listed here have been determined to be acceptable for use with currently approved LWR fuel with a peak burnup up to 62,000 MWD/MTU. The data in this section may not be applicable to cores containing mixed oxide (MOX) fuel.	Conforms	The fractions from Regulatory Position 3.2, Table 1 are used. The criteria of Footnote 10 to Position 3.2 are met.

Table A1-1
Conformance with Regulatory Guide (RG) 1.183
Section C, Regulatory Position

RG Section	RG Position	NMP1 Analysis	Comments
3.2	For non-LOCA events, the fractions of the core inventory assumed to be in the gap for the various radionuclides are given in Table 3. The release fractions from Table 3 are used in conjunction with the fission product inventory calculated with the maximum core radial peaking factor. Footnote 11 to Table 3 of Position 3.2: The release fractions listed here have been determined to be acceptable for use with currently approved LWR fuel with a peak burnup up to 62,000 MWD/MTU provided that the maximum linear heat generation rate does not exceed 6.3 kw/ft peak rod average power for burnups exceeding 54 GWD/MTU. As an alternative, fission gas release calculations performed using NRC approved methodologies may be considered on a case-by-case basis. To be acceptable, these calculations must use a projected power history that will bound the limiting projected plant-specific power history for the specific fuel load. For the BWR rod drop accident and the PWR rod ejection accident, the gap fractions are assumed to be 10% for iodines and noble gases.	Conforms	Conforms to Footnote 11 of Table 3 of Position 3.2. A bounding peaking factor of 1.8 is used for DBA events that do not involve the entire core.
3.3	Table 4 tabulates the onset and duration of each sequential release phase for DBA LOCAs at PWRs and BWRs. The specified onset is the time following the initiation of the accident (i.e., time = 0). The early in-vessel phase immediately follows the gap release phase. The activity released from the core during each release phase should be modeled as increasing in a linear fashion over the duration of the phase. For non-LOCA DBAs in which fuel damage is projected, the release from the fuel gap and the fuel pellet should be assumed to occur instantaneously with the onset of the projected damage.	Conforms	The BWR durations from Table 4 of Position 3.3 are used. The LOCA is modeled in a linear fashion. Non-LOCA events are modeled as an instantaneous release.

Table A1-1
Conformance with Regulatory Guide (RG) 1.183
Section C, Regulatory Position

RG Section	RG Position	NMP1 Analysis	Comments
3.3	For facilities licensed with leak-before-break methodology, the onset of the gap release phase may be assumed to be 10 minutes. A licensee may propose an alternative time for the onset of the gap release phase, based on facility-specific calculations using suitable analysis codes or on an accepted topical report shown to be applicable to the specific facility. In the absence of approved alternatives, the gap release phase onsets in Table 4 should be used.	N/A	NMP1 does not use leak-before-break methodology for the DBA analyses.
3.4	Table 5 lists the elements in each radionuclide group that should be considered in design basis analyses.	Conforms	This guidance is applied in the analyses, as supplemented by RIS 2006-04.
3.5	Of the radioiodine released from the reactor coolant system (RCS) to the containment in a postulated accident, 95 percent of the iodine released should be assumed to be cesium iodide (CsI), 4.85 percent elemental iodine, and 0.15 percent organic iodide. This includes releases from the gap and the fuel pellets. With the exception of elemental and organic iodine and noble gases, fission products should be assumed to be in particulate form. The same chemical form is assumed in releases from fuel pins in FHAs and from releases from the fuel pins through the RCS in DBAs other than FHAs or LOCAs. However, the transport of these iodine species following release from the fuel may affect these assumed fractions. The accident-specific appendices to this regulatory guide provide additional details.	Conforms	This guidance is applied in the analyses.

Table A1-1
Conformance with Regulatory Guide (RG) 1.183
Section C, Regulatory Position

RG Section	RG Position	NMP1 Analysis	Comments
3.6	The amount of fuel damage caused by non-LOCA design basis events should be analyzed to determine, for the case resulting in the highest radioactivity release, the fraction of the fuel that reaches or exceeds the initiation temperature of fuel melt and the fraction of fuel elements for which the fuel clad is breached. Although the NRC staff has traditionally relied upon the departure from nucleate boiling ratio (DNBR) as a fuel damage criterion, licensees may propose other methods to the NRC staff, such as those based upon enthalpy deposition, for estimating fuel damage for the purpose of establishing radioactivity releases.	Conforms	Fuel damage assessment for the CRDA is based on GESTAR standard analyses to estimate fuel damage.
4.1.1	The dose calculations should determine the TEDE. TEDE is the sum of the committed effective dose equivalent (CEDE) from inhalation and the deep dose equivalent (DDE) from external exposure. The calculation of these two components of the TEDE should consider all radionuclides, including progeny from the decay of parent radionuclides, that are significant with regard to dose consequences and the released radioactivity.	Conforms	This guidance is applied in the analyses, as supplemented by RIS 2006-04. TEDE doses are calculated by RADTRAD, with decay and daughter products enabled. Additional noble gases Ba137m and Rb88 are also included.
4.1.2	The exposure-to-CEDE factors for inhalation of radioactive material should be derived from the data provided in ICRP Publication 30, "Limits for Intakes of Radionuclides by Workers." Table 2.1 of Federal Guidance Report 11, "Limiting Values of Radionuclide Intake and Air Concentration and Dose Conversion Factors for Inhalation, Submersion, and Ingestion," provides tables of conversion factors acceptable to the NRC staff. The factors in the column headed "effective" yield doses corresponding to the CEDE.	Conforms	Federal Guidance Report (FGR) 11 dose conversion factors are used.

Table A1-1
Conformance with Regulatory Guide (RG) 1.183
Section C, Regulatory Position

RG Section	RG Position	NMP1 Analysis	Comments
4.1.3	For the first 8 hours, the breathing rate of persons offsite should be assumed to be 3.5 x 10^{-4} cubic meters per second. From 8 to 24 hours following the accident, the breathing rate should be assumed to be 1.8 x 10^{-4} cubic meters per second. After that and until the end of the accident, the rate should be assumed to be 2.3 x 10^{-4} cubic meters per second.	Conforms	This guidance is applied in the analyses.
4.1.4	The DDE should be calculated assuming submergence in semi-infinite cloud assumptions with appropriate credit for attenuation by body tissue. The DDE is nominally equivalent to the effective dose equivalent (EDE) from external exposure if the whole body is irradiated uniformly. Since this is a reasonable assumption for submergence exposure situations, EDE may be used in lieu of DDE in determining the contribution of external dose to the TEDE. Table III.1 of Federal Guidance Report 12, "External Exposure to Radionuclides in Air, Water, and Soil," provides external EDE conversion factors acceptable to the NRC staff. The factors in the column headed "effective" yield doses corresponding to the EDE.	Conforms	Federal Guidance Report (FGR) 12 conversion factors are used.
4.1.5	The TEDE should be determined for the most limiting person at the EAB. The maximum EAB TEDE for any two-hour period following the start of the radioactivity release should be determined and used in determining compliance with the dose criteria in 10 CFR 50.67. The maximum two-hour TEDE should be determined by calculating the postulated dose for a series of small time increments and performing a "sliding" sum over the increments for successive two-hour periods. The maximum TEDE obtained is submitted. The time increments should appropriately reflect the progression of the accident to capture the peak dose interval between the start of the event and the end of radioactivity release (see also Table 6).	Conforms	The maximum two-hour LOCA EAB doses have been calculated.

Table A1-1
Conformance with Regulatory Guide (RG) 1.183
Section C, Regulatory Position

RG Section	RG Position	NMP1 Analysis	Comments
4.1.6	TEDE should be determined for the most limiting receptor at the outer boundary of the low population zone (LPZ) and should be used in determining compliance with the dose criteria in 10 CFR 50.67.	Conforms	This guidance is applied in the analyses.
4.1.7	No correction should be made for depletion of the effluent plume by deposition on the ground.	Conforms	No such corrections are made in the analyses.
4.2.1	The TEDE analysis should consider all sources of radiation that will cause exposure to control room personnel. The applicable sources will vary from facility to facility, but typically will include: • Contamination of the control room atmosphere by the intake or infiltration of the radioactive material contained in the radioactive plume released from the facility, • Contamination of the control room atmosphere by the intake or infiltration of airborne radioactive material from areas and structures adjacent to the control room envelope, • Radiation shine from the external radioactive plume released from the facility, • Radiation shine from radioactive material in the reactor containment, • Radiation shine from radioactive material in systems and components inside or external to the control room envelope, e.g., radioactive material buildup in recirculation filters.	Conforms	All sources of radiation that will cause exposure to control room personnel have been considered in the analyses.
4.2.2	The radioactive material releases and radiation levels used in the control room dose analysis should be determined using the same source term, transport, and release assumptions used for determining the EAB and the LPZ TEDE values, unless these assumptions would result in non-conservative results for the control room.	Conforms	The source term, transport, and release methodology are the same for both the control room and offsite locations.

Table A1-1
Conformance with Regulatory Guide (RG) 1.183
Section C, Regulatory Position

RG Section	RG Position	NMP1 Analysis	Comments
4.2.3	The models used to transport radioactive material into and through the control room, and the shielding models used to determine radiation dose rates from external sources, should be structured to provide suitably conservative estimates of the exposure to control room personnel.	Conforms	This guidance is applied in the analyses. The models used in the AST analyses are described in Section A1-4 and are suitably conservative.
4.2.4	Credit for engineered safety features that mitigate airborne radioactive material within the control room may be assumed. Such features may include control room isolation or pressurization, or intake or recirculation filtration. Refer to Section 6.5.1, "ESF Atmospheric Cleanup System," of the SRP and Regulatory Guide 1.52, "Design, Testing, and Maintenance Criteria for Postaccident Engineered-Safety-Feature Atmosphere Cleanup System Air Filtration and Adsorption Units of Light-Water-Cooled Nuclear Power Plants," for guidance. The control room design is often optimized for the DBA LOCA and the protection afforded for other accident sequences may not be as advantageous. In most designs, control room isolation is actuated by engineered safeguards feature (ESF) signals or radiation monitors (RMs). In some cases, the ESF signal is effective only for selected accidents, placing reliance on the RMs for the remaining accidents. Several aspects of RMs can delay the control room isolation, including the delay for activity to build up to concentrations equivalent to the alarm setpoint and the effects of different radionuclide accident isotopic mixes on monitor response.	Conforms	Filtration of intake air by the Control Room Air Treatment System (CRATS) is credited in the LOCA analysis. The CRATS is automatically initiated upon a LOCA or MSLB signal, or upon a high radiation indication from either of two radiation monitors installed in the outside air inlet ductwork. No credit for filtration by the CRATS is taken in the MSLB accident, Refueling Accident, or CRDA analyses.
4.2.5	Credit should generally not be taken for the use of personal protective equipment or prophylactic drugs. Deviations may be considered on a case-by-case basis.	Conforms	Such credits are not taken.

Table A1-1
Conformance with Regulatory Guide (RG) 1.183
Section C, Regulatory Position

RG Section	RG Position	NMP1 Analysis	Comments
4.2.6	The dose receptor for these analyses is the hypothetical maximum exposed individual who is present in the control room for 100% of the time during the first 24 hours after the event, 60% of the time between 1 and 4 days, and 40% of the time from 4 days to 30 days. For the duration of the event, the breathing rate of this individual should be assumed to be 3.5×10^{-4} cubic meters per second.	Conforms	This guidance is applied in the analyses.
4.2.7	Control room doses should be calculated using dose conversion factors identified in Regulatory Position 4.1 above for use in offsite dose analyses. The DDE from photons may be corrected for the difference between finite cloud geometry in the control room and the semi-infinite cloud assumption used in calculating the dose conversion factors. The following expression may be used to correct the semi-infinite cloud dose, DDE_{∞}, to a finite cloud dose, DDE_{finite}, where the control room is modeled as a hemisphere that has a volume, V, in cubic feet, equivalent to that of the control room. $$DDE_{finite} = \frac{DDE_{\infty} V^{0.338}}{1173}$$	Conforms	This guidance is applied in the analyses.
4.3	The guidance provided in Regulatory Positions 4.1 and 4.2 should be used, as applicable, in re-assessing the radiological analyses identified in Regulatory Position 1.3.1, such as those in NUREG-0737. Design envelope source terms provided in NUREG-0737 should be updated for consistency with the AST. In general, radiation exposures to plant personnel identified in Regulatory Position 1.3.1 should be expressed in terms of TEDE. Integrated radiation exposure of plant equipment should be determined using the guidance of Appendix I of this guide.	Conforms	Based on an evaluation, the existing TID-14844 based analyses are shown to be conservative and bounding. Given compliance with the GDC-19 limit of 5 Rem when dose is based on TID-14844 source terms, compliance with 10 CFR 50.67 control room dose limits can be expected with the AST-based analysis. Therefore, the historically analyzed cases are sufficient and no additional analysis of vital areas is necessary.

Table A1-1
Conformance with Regulatory Guide (RG) 1.183
Section C, Regulatory Position

RG Section	RG Position	NMP1 Analysis	Comments
4.4	The radiological criteria for the EAB, the outer boundary of the LPZ, and for the control room are in 10 CFR 50.67. These criteria are stated for evaluating reactor accidents of exceedingly low probability of occurrence and low risk of public exposure to radiation, e.g., a large-break LOCA. The control room criterion applies to all accidents. For events with a higher probability of occurrence, postulated EAB and LPZ doses should not exceed the criteria tabulated in Table 6. The acceptance criteria for the various NUREG-0737 (Ref. 2) items generally reference General Design Criteria 19 (GDC 19) from Appendix A to 10 CFR Part 50 or specify criteria derived from GDC-19. These criteria are generally specified in terms of whole body dose, or its equivalent to any body organ. For facilities applying for, or having received, approval for the use of an AST, the applicable criteria should be updated for consistency with the TEDE criterion in 10 CFR 50.67(b)(2)(iii).	Conforms	This guidance is applied in the analyses of design basis accidents. See RG Section 4.3 above regarding NUREG-0737 items.
5.1.1	The evaluations required by 10 CFR 50.67 are re-analyses of the design basis safety analyses and evaluations required by 10 CFR 50.34; they are considered to be a significant input to the evaluations required by 10 CFR 50.92 or 10 CFR 50.59. These analyses should be prepared, reviewed, and maintained in accordance with quality assurance programs that comply with Appendix B, "Quality Assurance Criteria for Nuclear Power Plants and Fuel Reprocessing Plants," to 10 CFR Part 50.	Conforms	These analyses were prepared as specified in the guidance.

Table A1-1
Conformance with Regulatory Guide (RG) 1.183
Section C, Regulatory Position

RG Section	RG Position	NMP1 Analysis	Comments
5.1.2	Credit may be taken for accident mitigation features that are classified as safety-related, are required to be operable by technical specifications, are powered by emergency power sources, and are either automatically actuated or, in limited cases, have actuation requirements explicitly addressed in emergency operating procedures. The single active component failure that results in the most limiting radiological consequences should be assumed. Assumptions regarding the occurrence and timing of a loss of offsite power should be selected with the objective of maximizing the postulated radiological consequences.	Conforms, based on results of evaluation	Systems credited for accident mitigation include the containment spray system, the reactor building emergency ventilation system (RBEVS), and the control room air treatment system (CRATS). These systems are classified as safety-related, are required to be operable by technical specifications, are powered by emergency power sources, and are automatically actuated. The analyses also take credit for Liquid Poison System (LPS) operation for post-LOCA suppression pool pH control. The LPS is safety-related, required to be operable by technical specifications, and supplied with emergency power. Suitability of the LPS to perform the post-LOCA pH control function is addressed in Attachment (5).
5.1.3	The numeric values that are chosen as inputs to the analyses required by 10 CFR 50.67 should be selected with the objective of determining a conservative postulated dose. In some instances, a particular parameter may be conservative in one portion of an analysis but be nonconservative in another portion of the same analysis.	Conforms	Conservative assumptions were used in the analyses.
5.1.4	Licensees should ensure that analysis assumptions and methods are compatible with the ASTs and the TEDE criteria.	Conforms	Analysis assumptions and methods were in accordance with this guidance.

Table A1-1
Conformance with Regulatory Guide (RG) 1.183
Section C, Regulatory Position

RG Section	RG Position	NMP1 Analysis	Comments
5.3	Atmospheric dispersion values (X/Q) for the EAB, the LPZ, and the control room that were approved by the staff during initial facility licensing or in subsequent licensing proceedings may be used in performing the radiological analyses identified by this guide. Methodologies that have been used for determining X/Q values are documented in Regulatory Guides 1.3 and 1.4, Regulatory Guide 1.145, "Atmospheric Dispersion Models for Potential Accident Consequence Assessments at Nuclear Power Plants," and the paper, "Nuclear Power Plant Control Room Ventilation System Design for Meeting General Criterion 19." References 22 (Murphy and Campe paper, August 1974) and 28 (RG 1.145) should be used if the FSAR X/Q values are to be revised or if values are to be determined for new release points or receptor distances. Fumigation should be considered where applicable for the EAB and LPZ. For the EAB, the assumed fumigation period should be timed to be included in the worst 2-hour exposure period. The NRC computer code PAVAN implements Regulatory Guide 1.145 and its use is acceptable to the NRC staff. The methodology of the NRC computer code ARCON96 is generally acceptable to the NRC staff for use in determining control room X/Q values. Meteorological data collected in accordance with the site-specific meteorological measurements program described in the facility FSAR should be used in generating accident X/Q values. Additional guidance is provided in Regulatory Guide 1.23, "Onsite Meteorological Programs." All changes in X/Q analysis methodology should be reviewed by the NRC staff.	Conforms	New atmospheric dispersion values (X/Q) for the EAB, the LPZ, and the control room have been calculated using the ARCON96 and PAVAN computer codes and meteorological data for the five-year period from 1997 through 2001 See Attachment (7).

Table A1-2
Conformance with Regulatory Guide (RG) 1.183
Appendix A, Assumptions for Evaluating the Radiological Consequences of a LWR Loss-of-Coolant Accident

RG Section	RG Position	NMP1 Analysis	Comments
1	Acceptable assumptions regarding core inventory and the release of radionuclides from the fuel are provided in Regulatory Position 3 of this guide.	Conforms	See RG Section 3 below.
2	If the sump or suppression pool pH is controlled at values of 7 or greater, the chemical form of radioiodine released to the containment should be assumed to be 95% cesium iodide (CsI), 4.85 percent elemental iodine, and 0.15 percent organic iodide. Iodine species, including those from iodine re-evolution, for sump or suppression pool pH values less than 7 will be evaluated on a case-by-case basis. Evaluations of pH should consider the effect of acids and bases created during the LOCA event, e.g., radiolysis products. With the exception of elemental and organic iodine and noble gases, fission products should be assumed to be in particulate form.	Conforms	The stated distributions of iodine chemical forms are used. The post-LOCA suppression pool pH has been evaluated. The pH remains above 7 for at least 30 days by injection of sodium pentaborate solution by the Liquid Poison System. See Attachments (5) and (6).
3.1	The radioactivity released from the fuel should be assumed to mix instantaneously and homogeneously throughout the free air volume of the primary containment in PWRs or the drywell in BWRs as it is released. This distribution should be adjusted if there are internal compartments that have limited ventilation exchange. The suppression pool free air volume may be included provided there is a mechanism to ensure mixing between the drywell to the wetwell. The release into the containment or drywell should be assumed to terminate at the end of the early in-vessel phase.	Conforms	The radioactivity released from the fuel is assumed to instantaneously and homogenously mix throughout the drywell air space. Mixing with the wetwell air space is assumed to occur after the release from the core has ended (at 2.033 hours). At this time, considerable thermal-hydraulic activity in the PC will result in the drywell and torus airspace volumes becoming well-mixed.

Table A1-2
Conformance with Regulatory Guide (RG) 1.183
Appendix A, Assumptions for Evaluating the Radiological Consequences of a LWR Loss-of-Coolant Accident

RG Section	RG Position	NMP1 Analysis	Comments
3.2	Reduction in airborne radioactivity in the containment by natural deposition within the containment may be credited. Acceptable models for removal of iodine and aerosols are described in Chapter 6.5.2, "Containment Spray as a Fission Product Cleanup System," of the Standard Review Plan (SRP), NUREG-0800 and in NUREG/CR-6189, "A Simplified Model of Aerosol Removal by Natural Processes in Reactor Containments." The latter model is incorporated into the analysis code RADTRAD. The prior practice of deterministically assuming that a 50% plateout of iodine is released from the fuel is no longer acceptable to the NRC staff as it is inconsistent with the characteristics of the revised source terms.	Conforms using alternative methods	No deterministically assumed initial plateout of iodine is credited. Removal via deposition is determined using the Polestar computer code STARNAUA (see Section A1-4.1.1.3).

Table A1-2
Conformance with Regulatory Guide (RG) 1.183
Appendix A, Assumptions for Evaluating the Radiological Consequences of a LWR Loss-of-Coolant Accident

RG Section	RG Position	NMP1 Analysis	Comments
3.3	Reduction in airborne radioactivity in the containment by containment spray systems that have been designed and are maintained in accordance with Chapter 6.5.2 of the SRP may be credited. Acceptable models for the removal of iodine and aerosols are described in Chapter 6.5.2 of the SRP and NUREG/CR-5966, "A Simplified Model of Aerosol Removal by Containment Sprays." This simplified model is incorporated into the analysis code RADTRAD. The evaluation of the containment sprays should address areas within the primary containment that are not covered by the spray drops. The mixing rate attributed to natural convection between sprayed and unsprayed regions of the containment building, provided that adequate flow exists between these regions, is assumed to be two turnovers of the unsprayed regions per hour, unless other rates are justified. The containment building atmosphere may be considered a single, well-mixed volume if the spray covers at least 90% of the volume and if adequate mixing of unsprayed compartments can be shown. The SRP sets forth a maximum decontamination factor (DF) for elemental iodine based on the maximum iodine activity in the primary containment atmosphere when the sprays actuate, divided by the activity of iodine remaining at some time after decontamination. The SRP also states that the particulate iodine removal rate should be reduced by a factor of 10 when a DF of 50 is reached. The reduction in the removal rate is not required if the removal rate is based on the calculated time-dependent airborne aerosol mass. There is no specified maximum DF for aerosol removal by sprays. The maximum activity to be used in determining the DF is defined as the iodine activity in the columns labeled "Total" in Tables 1 and 2 of this guide multiplied by 0.05 for elemental iodine and by 0.95 for particulate iodine (i.e., aerosol treated as particulate in SRP methodology).	Conforms using alternative methods	Credit is taken for reduction in airborne activity in the containment by the containment spray system as determined using the Polestar computer code STARNAUA (see Section A1-4.1.1.3).

Table A1-2
Conformance with Regulatory Guide (RG) 1.183
Appendix A, Assumptions for Evaluating the Radiological Consequences of a LWR Loss-of-Coolant Accident

RG Section	RG Position	NMP1 Analysis	Comments
3.4	Reduction in airborne radioactivity in the containment by in-containment recirculation filter systems may be credited if these systems meet the guidance of Regulatory Guide 1.52 and Generic Letter 99-02. The filter media loading caused by the increased aerosol release associated with the revised source term should be addressed.	N/A	No in-containment recirculation filter systems exist at NMP1.
3.5	Reduction in airborne radioactivity in the containment by suppression pool scrubbing in BWRs should generally not be credited. However, the staff may consider such reduction on an individual case basis. The evaluation should consider the relative timing of the blowdown and the fission product release from the fuel, the force driving the release through the pool, and the potential for any bypass of the suppression pool. Analyses should consider iodine re-evolution if the suppression pool liquid pH is not maintained greater than 7.	Conforms	No credit is taken for suppression pool scrubbing in the LOCA AST re-analysis. Analyses have been performed that determined that the suppression pool pH is maintained greater than 7; therefore, iodine re-evolution is not expected. See Attachment (5).
3.6	Reduction in airborne radioactivity in the containment by retention in ice condensers, or other engineering safety features not addressed above, should be evaluated on an individual case basis. See Section 6.5.4 of the SRP.	N/A	NMP1 does not have ice condensers. Other than the containment spray system, NMP1 does not have any other systems for the reduction of airborne radioactivity in the containment.

Table A1-2
Conformance with Regulatory Guide (RG) 1.183
Appendix A, Assumptions for Evaluating the Radiological Consequences of a LWR Loss-of-Coolant Accident

RG Section	RG Position	NMP1 Analysis	Comments
3.7	The primary containment (i.e., drywell for Mark I and II containment designs) should be assumed to leak at the peak pressure technical specification leak rate for the first 24 hours. For PWRs, the leak rate may be reduced after the first 24 hours to 50% of the technical specification leak rate. For BWRs, leakage may be reduced after the first 24 hours, if supported by plant configuration and analyses, to a value not less than 50% of the technical specification leak rate. Leakage from subatmospheric containments is assumed to terminate when the containment is brought to and maintained at a subatmospheric condition as defined by technical specifications. For BWRs with Mark III containments, the leakage from the drywell into the primary containment should be based on the steaming rate of the heated reactor core, with no credit for core debris relocation. This leakage should be assumed during the two-hour period between the initial blowdown and termination of the fuel radioactivity release (gap and early in-vessel release phases). After two hours, the radioactivity is assumed to be uniformly distributed throughout the drywell and the primary containment.	Conforms	The NMP1 has a Mark I containment. The primary containment leakage is assumed to be 1.5% of containment air weight per day for 24 hours (the technical specification limit) and 0.75% per day from 24 hours to 720 hours based on containment pressure reductions.

Table A1-2
Conformance with Regulatory Guide (RG) 1.183
Appendix A, Assumptions for Evaluating the Radiological Consequences of a LWR Loss-of-Coolant Accident

RG Section	RG Position	NMP1 Analysis	Comments
3.8	If the primary containment is routinely purged during power operations, releases via the purge system prior to containment isolation should be analyzed and the resulting doses summed with the postulated doses from other release paths. The purge release evaluation should assume that 100% of the radionuclide inventory in the reactor coolant system liquid is released to the containment at the initiation of the LOCA. This inventory should be based on the technical specification reactor coolant system equilibrium activity. Iodine spikes need not be considered. If the purge system is not isolated before the onset of the gap release phase, the release fractions associated with the gap release and early in-vessel phases should be considered as applicable.	Conforms	The NMP1 primary containment is not routinely purged during power operation. Purging is limited to inerting, de-inerting, and occasional short pressure control activities. Thus, releases via the purge system are not considered.
4.1	Leakage from the primary containment should be considered to be collected, processed by engineered safety feature (ESF) filters, if any, and released to the environment via the secondary containment exhaust system during periods in which the secondary containment has a negative pressure as defined in technical specifications. Credit for an elevated release should be assumed only if the point of physical release is more than two and one-half times the height of any adjacent structure.	Conforms	This guidance is applied in the analyses. Since the stack height is less than 2.5 times the height of adjacent structures, no credit is taken for an elevated release.
4.2	Leakage from the primary containment is assumed to be released directly to the environment as a ground-level release during any period in which the secondary containment does not have a negative pressure as defined in technical specifications.	Conforms	This guidance is applied in the analyses.

Table A1-2
Conformance with Regulatory Guide (RG) 1.183
Appendix A, Assumptions for Evaluating the Radiological Consequences of a LWR Loss-of-Coolant Accident

RG Section	RG Position	NMP1 Analysis	Comments
4.3	The effect of high wind speeds on the ability of the secondary containment to maintain a negative pressure should be evaluated on an individual case basis. The wind speed to be assumed is the 1-hour average value that is exceeded only 5% of the total number of hours in the data set. Ambient temperatures used in these assessments should be the 1-hour average value that is exceeded only 5% or 95% of the total numbers of hours in the data set, whichever is conservative for the intended use (e.g., if high temperatures are limiting, use those exceeded only 5%).	Conforms	The wind speed exceeded only 5% of the time at NMP1 in the secondary containment vicinity is approximately 22 mph (30 ft. elevation of the meteorological tower). It has been determined that a wind speed of greater than 20 mph would be required before secondary containment pressures would be positive relative to outside air pressures at the downwind side of the reactor building.
4.4	Credit for dilution in the secondary containment may be allowed when adequate means to cause mixing can be demonstrated. Otherwise, the leakage from the primary containment should be assumed to be transported directly to exhaust systems without mixing. Credit for mixing, if found to be appropriate, should generally be limited to 50%. This evaluation should consider the magnitude of the containment leakage in relation to contiguous building volume or exhaust rate, the location of exhaust plenums relative to projected release locations, the recirculation ventilation systems, and internal walls and floors that impede stream flow between the release and the exhaust.	Conforms	A 50% mixing credit is taken for dilution/mixing in secondary containment.
4.5	Primary containment leakage that bypasses the secondary containment should be evaluated at the bypass leak rate incorporated in the technical specifications. If the bypass leakage is through water, e.g., via a filled piping run that is maintained full, credit for retention of iodine and aerosols may be considered on a case-by-case basis. Similarly, deposition of aerosol radioactivity in gas-filled lines may be considered on a case-by-case basis.	Conforms	Reactor building (secondary containment) bypass leakage rates are included in the analysis. The maximum allowable bypass leakage values are controlled by the 10 CFR 50 Appendix J Testing Program that is described in TS Section 6.5.7. No credit is taken for retention in water filled piping. Deposition in gas-filled lines is considered only in the main steam piping between the main steam isolation valves.

Table A1-2
Conformance with Regulatory Guide (RG) 1.183
Appendix A, Assumptions for Evaluating the Radiological Consequences of a LWR Loss-of-Coolant Accident

RG Section	RG Position	NMP1 Analysis	Comments
4.6	Reduction in the amount of radioactive material released from the secondary containment because of ESF filter systems may be taken into account provided that these systems meet the guidance of Regulatory Guide 1.52 and Generic Letter 99-02.	Conforms	RBEVS HEPA and charcoal adsorber filters are credited in the evaluation of a LOCA for onsite and offsite dose consequences. The RBEVS is a safety related system and is described in UFSAR Section VII-H. Laboratory testing of the activated charcoal meets the guidance of Generic Letter 99-02.
5.1	With the exception of noble gases, all the fission products released from the fuel to the containment (as defined in Tables 1 and 2 of this guide) should be assumed to instantaneously and homogeneously mix in the primary containment sump water (in PWRs) or suppression pool (in BWRs) at the time of release from the core. In lieu of this deterministic approach, suitably conservative mechanistic models for the transport of airborne activity in containment to the sump water may be used. Note that many of the parameters that make spray and deposition models conservative with regard to containment airborne leakage are nonconservative with regard to the buildup of sump activity.	Conforms	With the exception of noble gases, all the fission products released from the fuel to the containment are assumed to instantaneously and homogeneously mix in the suppression pool at the time of release from the core.

Table A1-2
Conformance with Regulatory Guide (RG) 1.183
Appendix A, Assumptions for Evaluating the Radiological Consequences of a LWR Loss-of-Coolant Accident

RG Section	RG Position	NMP1 Analysis	Comments
5.2	The leakage should be taken as two times the sum of the simultaneous leakage from all components in the ESF recirculation systems above which the technical specifications, or licensee commitments to item III.D.1.1 of NUREG-0737, would require declaring such systems inoperable. The leakage should be assumed to start at the earliest time the recirculation flow occurs in these systems and end at the latest time the releases from these systems are terminated. Consideration should also be given to design leakage through valves isolating ESF recirculation systems from tanks vented to atmosphere, e.g., emergency core cooling system (ECCS) pump miniflow return to the refueling water storage tank.	Conforms	The assumed 1200 gallon per hour leak rate is two times the sum of the allowed simultaneous leakage from all ESF components. ESF leakage is minimized at NMP1 through implementation of the program specified in TS Section 6.5.2, "Primary Coolant Sources Outside Containment." Since the core spray and containment spray systems take suction immediately from the suppression pool, this leak path is assumed to start at time zero. There are no credible leakage paths from ESF recirculation systems to atmospheric tanks.
5.3	With the exception of iodine, all radioactive materials in the recirculating liquid should be assumed to be retained in the liquid phase.	Conforms	This guidance is applied in the analyses.
5.4	If the temperature of the leakage exceeds 212°F, the fraction of total iodine in the liquid that becomes airborne should be assumed equal to the fraction of the leakage that flashes to vapor. This flash fraction, FF, should be determined using a constant enthalpy, h, process, based on the maximum time-dependent temperature of the sump water circulating outside the containment: $FF = \frac{h_{f1} - h_{f2}}{h_{fg}}$ *Where:* h_{f1} is the enthalpy of liquid at system design temperature and pressure; h_{f2} is the enthalpy of liquid at saturation conditions (14.7 psia, 212°F); and h_{fg} is the heat of vaporization at 212°F.	N/A	The temperature of the leakage does not exceed 212°F.

Table A1-2
Conformance with Regulatory Guide (RG) 1.183
Appendix A, Assumptions for Evaluating the Radiological Consequences of a LWR Loss-of-Coolant Accident

RG Section	RG Position	NMP1 Analysis	Comments
5.5	If the temperature of the leakage is less than 212°F or the calculated flash fraction is less than 10%, the amount of iodine that becomes airborne should be assumed to be 10% of the total iodine activity in the leaked fluid, unless a smaller amount can be justified based on the actual sump pH history and area ventilation rates.	Conforms	The temperature of the leakage does not exceed 212°F. A flash fraction of 10% is used. See Section A1-4.1.1.5 regarding the treatment of ESF leakage.
5.6	The radioiodine that is postulated to be available for release to the environment is assumed to be 97% elemental and 3% organic. Reduction in release activity by dilution or holdup within buildings, or by ESF ventilation filtration systems, may be credited where applicable. Filter systems used in these applications should be evaluated against the guidance of Regulatory Guide 1.52 and Generic Letter 99-02.	Conforms	This guidance is applied in the analyses. Reduction in release activity by the RBEVS HEPA and charcoal adsorber filters is credited after negative pressure is re-established in the secondary containment. The RBEVS is a safety related system and is described in UFSAR Section VII-H. Laboratory testing of the activated charcoal meets the guidance of Generic Letter 99-02.
6.1	For the purpose of this analysis, the activity available for release via MSIV leakage should be assumed to be that activity determined to be in the drywell for evaluating containment leakage (see Regulatory Position 3). No credit should be assumed for activity reduction by the steam separators or by iodine partitioning in the reactor vessel.	Conforms	This guidance is applied in the analyses.
6.2	All the MSIVs should be assumed to leak at the maximum leak rate above which the technical specifications would require declaring the MSIVs inoperable. The leakage should be assumed to continue for the duration of the accident. Postulated leakage may be reduced after the first 24 hours, if supported by site-specific analyses, to a value not less than 50% of the maximum leak rate.	Conforms	MSIV leakage assumed in this accident analysis is 50 scfh for any one line and 100 scfh for both steam lines when tested at ≥ 35 psig. The maximum allowable MSIV leakage values are controlled by the 10 CFR 50 Appendix J Testing Program that is described in TS Section 6.5.7. Reduction in leakage rates after 24 hours is based on post-accident containment pressure reductions. No credit is taken for leakage rate reductions below 50% of the MSIV leakage limit.

Table A1-2
Conformance with Regulatory Guide (RG) 1.183
Appendix A, Assumptions for Evaluating the Radiological Consequences of a LWR Loss-of-Coolant Accident

RG Section	RG Position	NMP1 Analysis	Comments
6.3	Reduction of the amount of released radioactivity by deposition and plateout on steam system piping upstream of the outboard MSIVs may be credited, but the amount of reduction in concentration allowed will be evaluated on an individual case basis. Generally, the model should be based on the assumption of well-mixed volumes, but other models such as slug flow may be used if justified.	Conforms	Credit is taken for deposition on steam system piping between the inboard and outboard MSIVs using the Polestar computer code STARNAUA (see Sections A1-4.1.1.3 and A1-4.1.1.4).
6.4	In the absence of collection and treatment of releases by ESFs such as the MSIV leakage control system, or as described in paragraph 6.5 below, the MSIV leakage should be assumed to be released to the environment as an unprocessed, ground-level release. Holdup and dilution in the turbine building should not be assumed.	Conforms	This guidance is applied in the analyses. NMP1 does not have a MSIV leakage control system.
6.5	A reduction in MSIV releases that is due to holdup and deposition in main steam piping downstream of the MSIVs and in the main condenser, including the treatment of air ejector effluent by offgas systems, may be credited if the components and piping systems used in the release path are capable of performing their safety function during and following a safe shutdown earthquake (SSE). The amount of reduction allowed will be evaluated on an individual case basis. References A-9 and A-10 provide guidance on acceptable models.	N/A	Holdup and deposition in the main steam piping downstream of the outboard MSIVs and in the main condenser is not credited in the analysis, even though the piping is seismically rugged and would remain intact during and after a design basis earthquake.

Table A1-2
Conformance with Regulatory Guide (RG) 1.183
Appendix A, Assumptions for Evaluating the Radiological Consequences of a LWR Loss-of-Coolant Accident

RG Section	RG Position	NMP1 Analysis	Comments
7.0	The radiological consequences from post-LOCA primary containment purging as a combustible gas or pressure control measure should be analyzed. If the installed containment purging capabilities are maintained for purposes of severe accident management and are not credited in any design basis analysis, radiological consequences need not be evaluated. If the primary containment purging is required within 30 days of the LOCA, the results of this analysis should be combined with consequences postulated for other fission product release paths to determine the total calculated radiological consequences from the LOCA. Reduction in the amount of radioactive material released via ESF filter systems may be taken into account provided that these systems meet the guidance in Regulatory Guide 1.52 and Generic Letter 99-02.	Conforms	Containment purging as a combustible gas or pressure control measure is not required nor credited in any design basis analysis for 30 days following a design basis LOCA at NMP1.

Table A1-3
Conformance with Regulatory Guide (RG) 1.183
Appendix B, Assumptions for Evaluating the Radiological Consequences of a Fuel Handling Accident

RG Section	RG Position	NMP1 Analysis	Comments
1.1	The number of fuel rods damaged during the accident should be based on a conservative analysis that considers the most limiting case. This analysis should consider parameters such as the weight of the dropped heavy load or the weight of a dropped fuel assembly (plus any attached handling grapples), the height of the drop, and the compression, torsion, and shear stresses on the irradiated fuel rods. Damage to adjacent fuel assemblies, if applicable (e.g., events over the reactor vessel), should be considered.	Conforms	The analysis assumes that the activity inventory from two full fuel assemblies is released. This is bounding for the 125 damaged rods for GE 8x8 fuel assemblies or the 140 damaged rods for GE11 9x9 fuel assemblies determined for the current licensing basis (described in UFSAR Section XV-C.3.0). The number of fuel rods damaged is based on a 30-ft drop onto the reactor core and includes the weight of the grapple. Damage due to a fuel assembly drop into the reactor vessel bounds a drop in the spent fuel pool.
1.2	The fission product release from the breached fuel is based on Regulatory Position 3.2 of this guide and the estimate of the number of fuel rods breached. All the gap activity in the damaged rods is assumed to be instantaneously released. Radionuclides that should be considered include xenons, kryptons, halogens, cesiums, and rubidiums.	Conforms	This guidance is applied in the analyses.
1.3	The chemical form of radioiodine released from the fuel to the spent fuel pool should be assumed to be 95% cesium iodide (CsI), 4.85 percent elemental iodine, and 0.15 percent organic iodide. The CsI released from the fuel is assumed to completely dissociate in the pool water. Because of the low pH of the pool water, the iodine re-evolves as elemental iodine. This is assumed to occur instantaneously. The NRC staff will consider, on a case-by-case basis, justifiable mechanistic treatment of the iodine release from the pool.	Conforms	This guidance is applied in the analyses.

Table A1-3
Conformance with Regulatory Guide (RG) 1.183
Appendix B, Assumptions for Evaluating the Radiological Consequences of a Fuel Handling Accident

RG Section	RG Position	NMP1 Analysis	Comments
2	If the depth of water above the damaged fuel is 23 feet or greater, the decontamination factors for the elemental and organic species are 500 and 1, respectively, giving an overall effective decontamination factor of 200 (i.e., 99.5% of the total iodine released from the damaged rods is retained by the water). This difference in decontamination factors for elemental (99.85%) and organic iodine (0.15%) species results in the iodine above the water being composed of 57% elemental and 43% organic species. If the depth of water is not 23 feet, the decontamination factor will have to be determined on a case-by-case method.	Conforms	Even though the maximum fuel damage is for a drop in the refueling cavity onto the reactor core, a more conservative spent fuel pool decontamination factor (DF) for elemental iodine is used in the analysis. Based on the minimum depth of water in the canal to the spent fuel pool of 22'-9", an adjusted DF of 268 was calculated. See Section A1-4.1.5.
3	The retention of noble gases in the water in the fuel pool or reactor cavity is negligible (i.e., decontamination factor of 1). Particulate radionuclides are assumed to be retained by the water in the fuel pool or reactor cavity (i.e., infinite decontamination factor).	Conforms	This guidance is applied in the analyses.
4.1	The radioactive material that escapes from the fuel pool to the fuel building is assumed to be released to the environment over a 2-hour time period.	Conforms	This guidance is applied in the analyses.
4.2	A reduction in the amount of radioactive material released from the fuel pool by engineered safety feature (ESF) filter systems may be taken into account provided these systems meet the guidance of Regulatory Guide 1.52 and Generic Letter 99-02. Delays in radiation detection, actuation of the ESF filtration system, or diversion of ventilation flow to the ESF filtration system should be determined and accounted for in the radioactivity release analyses.	Conforms	The radioactive material is assumed to be released directly to the environment. No credit is taken for filtration of the release from the reactor building by the RBEVS.

Table A1-3
Conformance with Regulatory Guide (RG) 1.183
Appendix B, Assumptions for Evaluating the Radiological Consequences of a Fuel Handling Accident

RG Section	RG Position	NMP1 Analysis	Comments
4.3	The radioactivity release from the fuel pool should be assumed to be drawn into the ESF filtration system without mixing or dilution in the fuel building. If mixing can be demonstrated, credit for mixing and dilution may be considered on a case-by-case basis. This evaluation should consider the magnitude of the building volume and exhaust rate, the potential for bypass to the environment, the location of exhaust plenums relative to the surface of the pool, recirculation ventilation systems, and internal walls and floors that impede stream flow between the surface of the pool and the exhaust plenums.	N/A	No credit is taken for mixing in the reactor building or filtration of the release from the reactor building by the RBEVS.
5.1	If the containment is isolated during fuel handling operations, no radiological consequences need to be analyzed.	N/A	Secondary containment isolation is not credited. The radioactive material is assumed to be released directly to the environment.
5.2	If the containment is open during fuel handling operations, but designed to automatically isolate in the event of a fuel handling accident, the release duration should be based on delays in radiation detection and completion of containment isolation. If it can be shown that containment isolation occurs before radioactivity is released to the environment, no radiological consequences need to be analyzed.	N/A	Secondary containment isolation is not credited. The radioactive material is assumed to be released directly to the environment.
5.3	If the containment is open during fuel handling operations (e.g., personnel air lock or equipment hatch is open), the radioactive material that escapes from the reactor cavity pool to the containment is released to the environment over a 2-hour time period. Note 3: The staff will generally require that technical specifications allowing such operations include administrative controls to close the airlock, hatch, or open penetrations within 30 minutes. Such administrative controls will generally require that a dedicated individual be present, with necessary equipment available, to restore containment closure should a fuel handling accident occur. Radiological analyses should generally not credit this manual isolation.	Conforms	Secondary containment is assumed to be open during fuel handling operations, and secondary containment isolation is not credited. An instantaneous release to the environment is assumed. As noted in Section A1-4.5.6 above, administrative controls will assure that actions are taken to reduce the potential radiological consequences of a refueling accident.

Table A1-3
Conformance with Regulatory Guide (RG) 1.183
Appendix B, Assumptions for Evaluating the Radiological Consequences of a Fuel Handling Accident

RG Section	RG Position	NMP1 Analysis	Comments
5.4	A reduction in the amount of radioactive material released from the containment by ESF filter systems may be taken into account provided that these systems meet the guidance of Regulatory Guide 1.52 and Generic Letter 99-02. Delays in radiation detection, actuation of the ESF filtration system, or diversion of ventilation flow to the ESF filtration system should be determined and accounted for in the radioactivity release analyses.	N/A	No credit is taken for filtration of the release from the reactor building by the RBEVS.
5.5	Credit for dilution or mixing of the activity released from the reactor cavity by natural or forced convection inside the containment may be considered on a case-by-case basis. Such credit is generally limited to 50% of the containment free volume. This evaluation should consider the magnitude of the containment volume and exhaust rate, the potential for bypass to the environment, the location of exhaust plenums relative to the surface of the reactor cavity, recirculation ventilation systems, and internal walls and floors that impede stream flow between the surface of the reactor cavity and the exhaust plenums.	N/A	The radioactive material is assumed to be released directly to the environment without any credit for dilution or mixing inside the secondary containment.

Table A1-4
Conformance with Regulatory Guide (RG) 1.183
Appendix C, Assumptions for Evaluating the Radiological Consequences of a BWR Rod Drop Accident

RG Section	RG Position	NMP1 Analysis	Comments
1	Assumptions acceptable to the NRC staff regarding core inventory are provided in Regulatory Position 3 of this guide. For the rod drop accident, the release from the breached fuel is based on the estimate of the number of fuel rods breached and the assumption that 10% of the core inventory of the noble gases and iodines is in the fuel gap. The release attributed to fuel melting is based on the fraction of the fuel that reaches or exceeds the initiation temperature for fuel melting and on the assumption that 100% of the noble gases and 50% of the iodines contained in that fraction are released to the reactor coolant.	Conforms	Release fractions in accordance with this guidance are used. Releases are based on fuel cladding perforation. There is no fuel melting. A conservative radial peaking factor of 1.8 is used.
2	If no or minimal fuel damage is postulated for the limiting event, the released activity should be the maximum coolant activity (typically 4 μCi/gm DE I-131) allowed by the technical specifications. Note 1: The activity assumed in the analysis should be based on the activity associated with the projected fuel damage or the maximum technical specification values, whichever maximizes the radiological consequences. In determining the dose equivalent I-131 (DE I-131), only the radioiodine associated with normal operations or iodine spikes should be included. Activity from projected fuel damage should not be included.	N/A	Fuel damage is postulated. The projected fuel damage is the limiting case.
3.1	The activity released from the fuel from either the gap or from fuel pellets is assumed to be instantaneously mixed in the reactor coolant within the pressure vessel.	Conforms	This guidance is applied in the analyses.
3.2	Credit should not be assumed for partitioning in the pressure vessel or for removal by the steam separators.	Conforms	No partitioning is assumed.

Table A1-4
Conformance with Regulatory Guide (RG) 1.183
Appendix C, Assumptions for Evaluating the Radiological Consequences of a BWR Rod Drop Accident

RG Section	RG Position	NMP1 Analysis	Comments
3.3	Of the activity released from the reactor coolant within the pressure vessel, 100% of the noble gases, 10% of the iodine, and 1% of the remaining radionuclides are assumed to reach the turbine and condensers.	Conforms	This guidance is applied in the analyses.
3.4	Of the activity that reaches the turbine and condenser, 100% of the noble gases, 10% of the iodine, and 1% of the particulate radionuclides are available for release to the environment. The turbine and condensers leak to the atmosphere as a ground- level release at a rate of 1% per day for a period of 24 hours, at which time the leakage is assumed to terminate. No credit should be assumed for dilution or holdup within the turbine building. Radioactive decay during holdup in the turbine and condenser may be assumed. Note 2: If there are forced flow paths from the turbine or condenser, such as unisolated motor vacuum pumps or unprocessed air ejectors, the leakage rate should be assumed to be the flow rate associated with the most limiting of these paths. Credit for collection and processing of releases, such as by off gas or standby gas treatment, will be considered on a case-by-case basis.	Conforms	This guidance is applied in the analyses for the two cases analyzed. These cases are (1) release via leakage from the main condenser; and (2) forced flow via the mechanical vacuum pump. This second case is based on the maximum activity concentration that will not cause isolation of the mechanical vacuum pumps on a high main steam line radiation signal. Retention by the charcoal delay beds in the offgas system is neglected.
3.5	In lieu of the transport assumptions provided in paragraphs 3.2 through 3.4 above, a more mechanistic analysis may be used on a case-by-case basis. Such analyses account for the quantity of contaminated steam carried from the pressure vessel to the turbine and condensers based on a review of the minimum transport time from the pressure vessel to the first main steam isolation (MSIV) and considers MSIV closure time.	N/A	Paragraphs 3.2 through 3.4 (see above) are used in the analysis.
3.6	The iodine species released from the reactor coolant within the pressure vessel should be assumed to be 95% CsI as an aerosol, 4.85% elemental, and 0.15% organic. The release from the turbine and condenser should be assumed to be 97% elemental and 3% organic.	Conforms	This guidance is applied in the analyses.

Table A1-5
Conformance with Regulatory Guide (RG) 1.183
Appendix D, Assumptions for Evaluating the Radiological Consequences of a BWR Main Steam Line Break Accident

RG Section	RG Position	NMP1 Analysis	Comments
1	Assumptions acceptable to the NRC staff regarding core inventory and the release of radionuclides from the fuel are provided in Regulatory Position 3 of this guide. The release from the breached fuel is based on Regulatory Position 3.2 of this guide and the estimate of the number of fuel rods breached.	N/A	No fuel damage is projected for this event. The release estimate is based on coolant activity.
2	If no or minimal fuel damage is postulated for the limiting event, the released activity should be the maximum coolant activity allowed by technical specification. The iodine concentration in the primary coolant is assumed to correspond to the following two cases in the nuclear steam supply system vendor's standard technical specifications.	Conforms	No fuel damage is expected. There is no concern of uncovering the core, as the swell that results from reactor depressurization will maintain adequate core coverage until MSIV isolation. The proposed changes to the NMP1 Technical Specification limit the reactor coolant Dose Equivalent (DE) I-131 specific activity to 0.2 μCi/gm, with action to shutdown the plant if the reactor coolant DE I-131 specific activity exceeds 4.0 μCi/gm during Power Operations and Hot Shutdown conditions.
2.1	The concentration that is the maximum value (typically 4.0 μCi/gm DE I-131) permitted and corresponds to the conditions of an assumed pre-accident spike, and	Conforms	The analysis assumes coolant activity of 4.0 μCi/gm DE I-131 corresponding to an assumed pre-accident spike.
2.2	The concentration that is the maximum equilibrium value (typically 0.2 μCi/gm DE I-131) permitted for continued full power operation.	N/A	This case was not analyzed since the calculated results for the pre-accident spike case are less than 2.5 rem TEDE (the acceptance criterion given in RG 1.183, Table 6 for the equilibrium iodine activity case).
3	The activity released from the fuel should be assumed to mix instantaneously and homogeneously in the reactor coolant. Noble gases should be assumed to enter the steam phase instantaneously.	N/A	No fuel damage is projected for this event. The release estimate is based on coolant activity.

Table A1-5
Conformance with Regulatory Guide (RG) 1.183
Appendix D, Assumptions for Evaluating the Radiological Consequences of a BWR Main Steam Line Break Accident

RG Section	RG Position	NMP1 Analysis	Comments
4.1	The main steam line isolation valves (MSIV) should be assumed to close in the maximum time allowed by technical specifications.	Conforms	Break isolation is assumed in 11 seconds, corresponding to the maximum MSIV closing time of 10 seconds plus a closure signal delay time of 1 second. This is unchanged from the existing analysis described in UFSAR Section XV-C.1.0. The MSIV closure time requirement is contained in a licensee procedure, as discussed in the Bases for TS Section 3.3.4, "Primary Containment Isolation Valves."
4.2	The total mass of coolant released should be assumed to be that amount in the steam line and connecting lines at the time of the break plus the amount that passes through the valves prior to closure.	Conforms	Mass of coolant released is per this guidance.
4.3	All the radioactivity in the released coolant should be assumed to be released to the atmosphere instantaneously as a ground-level release. No credit should be assumed for plateout, holdup, or dilution within facility buildings.	Conforms	This guidance was used in the analysis.
4.4	The iodine species released from the main steam line should be assumed to be 95% CsI as an aerosol, 4.85% elemental, and 0.15% organic.	Conforms	This guidance was used in the analysis.

Table A1-6
Computer Codes Used in AST
Design Basis Radiological Analyses

Task	Computer Code	Version or Revision	Comments
Determination of X/Q values for on site receptors near building structures.	ARCON96	---	NUREG/CR - 6331, Rev. 1, May 1997
Calculate doses due to MSLB, Refueling Accident, and CRDA	Excel	---	Spreadsheet
General purpose gamma shielding analysis.	MicroShield	5.03	Point Kernel Integration code. Developed by Grove Engineering.
Calculate fission product inventories.	ORIGEN	ORIGEN2	The code is referenced in RG 1.183 and consistent with NRC recommendation. ORNL/TM-7175
Determination of X/Q values for the EAB and LPZ.	PAVAN	2.0	NUREG/CR-2858, Nov. 1982
Perform radioactive decay of the source term.	RADDECAY	Version 3	Developed by Grove Engineering
Calculate both on-site and off-site doses.	RADTRAD	3.03	Referenced by RG 1.183 NUREG/CR-6604 USNRC April 1998
Perform independent check of dose calculations.	STARDOSE	03/01/1997	Polestar Applied Technology code
Evaluate aerosol removal in containment and the main steam lines as a function of time.	STARNAUA	---	Developed by Polestar Applied Technology, Inc. Utilized in other utility AST submittals.
Perform an independent check of MicroShield results.	QADMOD	Version 0, Level 3	Stone & Webster Point Kernel Gamma-Ray Shielding Code

Table A1-7
Fuel Data

Fuel Data	General Electric
Fuel Type	GE11
Initial Bundle Mass of Uranium (kg)	195.5
Initial Core Average Enrichment (U-235 wt%)	4.1
Core Average Bundle Power (MWt/bundle)	3.55
End of Cycle Core Wide Exposure (MWd/ST)	34,000

Table A1-8
Core Fission Product Inventory

Isotope	Ci/MWt t = 0		Isotope	Ci/MWt t = 0
Kr83M	3.27E+03		I132	3.92E+04
Kr85	3.93E+02		I133	5.51E+04
Kr85M	6.82E+03		I134	6.03E+04
Kr87	1.30E+04		I135	5.16E+04
Kr88	1.83E+04		Xe131M	3.04E+02
Kr89	2.22E+04		Xe133	5.27E+04
Rb86	7.29E+01		Xe133M	1.63E+03
Sr89	2.45E+04		Xe135	1.91E+04
Sr90	3.14E+03		Xe135M	1.09E+04
Sr91	3.10E+04		Xe137	4.80E+04
Sr92	3.38E+04		Xe138	4.50E+04
Y90	3.24E+03		Cs134	7.29E+03
Y91	3.18E+04		Cs136	2.28E+03
Y92	3.40E+04		Cs137	4.35E+03
Y93	3.96E+04		Ba137M	4.12E+03
Zr95	4.46E+04		Ba139	4.89E+04
Zr97	4.51E+04		Ba140	4.71E+04
Nb95	4.48E+04		La140	5.12E+04
Mo99	5.13E+04		La141	4.45E+04
Tc99M	4.49E+04		La142	4.29E+04
Ru103	4.29E+04		Ce141	4.47E+04
Ru105	3.01E+04		Ce143	4.11E+04
Ru106	1.76E+04		Ce144	3.70E+04
Rh105	2.84E+04		Pr143	3.97E+04
Sb127	3.01E+03		Nd147	1.80E+04
Sb129	8.91E+03		Np239	5.78E+05
Te127	3.00E+03		Pu238	1.45E+02
Te127M	4.05E+02		Pu239	1.34E+01
Te129	8.76E+03		Pu240	1.89E+01
Te129M	1.30E+03		Pu241	5.49E+03
Te131M	3.97E+03		Am241	7.48E+00
Te132	3.85E+04		Cm242	1.85E+03
I131	2.71E+04		Cm244	1.23E+02

Table A1-9
Accident Radiological Consequence Analyses Inputs

Input/Assumption	Value
Licensed Core Power	1850 MWt
No. of Fuel Assemblies in Core	532
Fuel Type	Current – GE11 (9x9) Past – GE 8x8
Control Room (CR) Volume	1.35E+05 ft^3
CR Normal Mode Ventilation	2025 scfm (2250 minus 10%)
CR Emergency Mode Ventilation	2025 scfm (2250 minus 10%)
Assumed CR Unfiltered In-leakage Rate	100 scfm*
CR Filtered Recirculation	N/A
Control Room Air Treatment System (CRATS) Filter Efficiencies	Particulates & Elemental I – 95% Organic I – 90%
Reactor Building Free Air Volume	2.10E+06 ft^3
Reactor Building Drawdown Time	6 hrs w/1 fan; 40 minutes w/2 fans
RBEVS Flow Rate	1760 cfm w/1 fan; 3520 cfm w/2 fans
RBEVS Filter Efficiency	Particulates & Elemental I – 95% Organic I – 90%
Environment Breathing Rate (Regulatory Guide 1.183)	0-8 hours: 3.5E-04 m^3/sec 8-24 hours: 1.8E-04 m^3/sec 1-30 days: 2.3E-04 m^3/sec
Control Room Breathing Rate (Regulatory Guide 1.183)	3.5E-04 m^3/sec
Control Room Occupancy Factors (Regulatory Guide 1.183)	0-1 day: 1.0 1-4 days: 0.6 4-30 days: 0.4

*Bounds the highest measured inleakage value of 45 scfm (documented in Reference A1-8.1).

Table A1-10
LOCA Inputs

Input/Assumption	Value
Fission Products Release Fractions (Regulatory Guide 1.183, Table 1)	**BWR Core Inventory Fraction Released Into Containment** Group / Gap Release Phase / Early In-vessel Phase / Total Noble Gases: 0.05 / 0.95 / 1.0 Halogens: 0.05 / 0.25 / 0.3 Alkali Metals: 0.05 / 0.20 / 0.25 Tellurium Metals: 0.00 / 0.05 / 0.05 Ba, Sr: 0.00 / 0.02 / 0.02 Noble Metals: 0.00 / 0.0025 / 0.0025 Cerium Group: 0.00 / 0.0005 / 0.0005 Lanthanides: 0.00 / 0.0002 / 0.0002
Fission Product Release Timing (Regulatory Guide 1.183, Table 4)	**LOCA Release Phases (BWR)** Phase / Onset / Duration Gap release: 2 min / 0.5 hr Early In-Vessel: 0.5 hr / 1.5 hr
Fission Product Iodine Chemical Form (Regulatory Guide 1.183, App. A)	Particulate: 95% Elemental: 4.85% Organic: 0.15%
Control Room Isolation	None Assumed
ESF Leakage Release Fractions	Ten percent of the radioiodine in the leaked coolant is assumed to become airborne in the reactor building (secondary containment).
Leakage Rates	
Primary Containment Leak Rate (30 days)	1.5% containment air weight/day (Technical Specification limit)
Secondary Containment (SC) Bypass Leak Rate (30 Days)	41.5 scfh beginning at t=0 hours
Assumed ESF Leak Rate (30 days)	1200 gph (2 times the allowed leakage value)
ESF Leakage Temperature	<212°F
MSIV Leak Rate at Test Pressure of 35 psig	100 scfh total; 50 scfh maximum for one line

Table A1-10
LOCA Inputs

Input/Assumption	Value
Volumes	
Drywell Airspace	180,000 ft^3
Torus Airspace	120,000 ft^3 (Minimum)
Suppression Pool	79,700 ft^3 (Minimum)
Reactor Building (Secondary Containment) Free Volume	2,100,000 ft^3
Removal Inputs	
Drywell Spray Flow Rate	6383 gpm*
Drywell Accident Conditions (Max. pressure bounds DBA LOCA and temperature bounds small steam line break.	P = 35 psig, T = 281°F
Steam Line Removal Efficiencies:	
Steam Line Conditions	Saturated Conditions at 1050 psia
Steam Line Volume: Inboard to Outboard MSIV (each line)	82.4 ft^3

* The smaller of the flow rates for the primary and secondary containment spray system spargers.

Table A1-11
LOCA Release Fractions as Release Rates Over the Accident Duration

Time Period (seconds)	Fraction of core inventory*	
0 - 120	No Release	
120 - 1920	Gases	Xe, Kr – 0.1/hr (0.05 total) Elemental I – 4.9E-3/hr (2.4E-3 total) Organic I – 1.5E-4/hr (7.5E-5 total)
	Aerosols	I, Br – 0.095/hr (0.0475 total) Cs, Rb – 0.1/hr (0.05 total)
1920 - 7320	Gases	Xe, Kr – 0.63/hr (0.95 total) Elemental I – 8.1E-3/hr (1.2E-2 total) Organic I – 2.5E-4/hr (3.8E-4 total)
	Aerosols	I, Br – 0.158/hr (0.2375 total) Cs, Rb – 0.133/hr (0.2 total) Te Group – 0.033/hr (0.05 total) Ba, Sr – 0.013/hr (0.02 total) Noble Metals – 1.7E-3/hr (2.5E-3 total) La Group – 1.3E-4/hr (2E-4 total) Ce Group – 3.3E-4/hr (5E-4 total)

*Release fractions and rates are from RG 1.183, Table 1 considering the chemical form described in RG 1.183, Section 3.5 (Reference A1-8.3).

Table A1-12
X/Q Values for LOCA Radiological Dose Calculations

(sec/m^3)

Release Location	Release Timing					
	0-2 hrs	2-4 hrs	4-8 hrs	8-24 hrs	1-4 days	4-30 days
EAB*						
Ground MSIV	1.90E-04	–NA–	–NA–	–NA–	–NA–	–NA–
Ground RB Bypass	1.90E-04	–NA–	–NA–	–NA–	–NA–	–NA–
Ground RB Siding	1.90E-04	–NA–	–NA–	–NA–	–NA–	–NA–
Stack Normal	–NA–	–NA–	–NA–	–NA–	–NA–	–NA–
Stack Fumigation	5.98E-05	–NA–	–NA–	–NA–	–NA–	–NA–
LPZ						
Ground MSIV	1.63E-05	1.63E-05	1.63E-05	1.10E-05	4.67E-06	1.37E-06
Ground RB Bypass	1.63E-05	1.63E-05	1.63E-05	1.10E-05	4.67E-06	1.37E-06
Ground RB Siding	1.63E-05	1.63E-05	1.63E-05	1.10E-05	4.67E-06	1.37E-06
Stack	2.12E-05	2.12E-05	1.26E-06	8.40E-07	3.45E-07	1.11E-07
Control Room						
Ground RB Bypass	1.03E-03	5.85E-04	5.85E-04	2.07E-04	1.75E-04	1.52E-04
Ground RB Siding	4.82E-04	2.61E-04	2.61E-04**	9.25E-05	6.70E-05	4.93E-05
Ground MSIV	1.03E-03	5.85E-04	5.85E-04	2.07E-04	1.75E-04	1.52E-04
Stack Normal	–NA–	1.26E-04	1.26E-04	4.30E-5	3.58E-5	2.59E-05
Stack Fumigation	2.27E-4	–NA–	–NA–	–NA–	–NA–	–NA–

Table A1-12
X/Q Values for LOCA Radiological Dose Calculations

(sec/m^3)

Release Location	Release Timing					
	0-2 hrs	2-4 hrs	4-8 hrs	8-24 hrs	1-4 days	4-30 days
Technical Support Center						
Ground RB Bypass	5.91E-04	4.26E-04	4.26E-04	1.63E-04	1.35E-04	1.16E-04
Ground RB Siding	7.09E-04	5.60E-04	5.60E-04**	–NA–	–NA–	–NA–
Ground MSIV	5.91E-04	4.26E-04	4.26E-04	1.63E-04	1.35E-04	1.16E-04
Stack Normal	–NA–	2.42E-04	2.42E-04	8.22E-5	6.06E-5	5.00E-05
Stack Fumigation	3.47E-4	–NA–	–NA–	–NA–	–NA–	–NA–

NA – Not Applicable

* Worst 2 hours

** The ground level release from the Reactor Building ends at 6 hours, when negative pressure is re-established.

Table A1-13
LOCA Radiological Consequence Analysis

(rem TEDE)

Dose Component	Offsite Dose		Control Room Dose
	EAB	LPZ	
Limiting Case	9.02	1.60	4.81
Regulatory Limit	25	25	5
Current Analysis* (Regulatory Limit) - rem	1.14E-06 (25) Gamma 5.16E-07 (300) Thyroid	1.09E-05 (25) Gamma 3.65E-05 (300) Thyroid	4.07 (5) Gamma 22.2 (30) Thyroid

* EAB and LPZ doses from UFSAR Section XV.C.5.1.8.2. Control room doses are from a letter from Niagara Mohawk Power Corporation to the NRC dated December 18, 1998 (Reference A1-8.25).

Table A1-14
MSLB Accident Inputs

Input/Assumption	Value
Mass Release	1.07E+05 lbm total* (26,250 lbm steam; 80,900 lbm water)
MSIV Isolation Time	11 seconds*
DE I-131 Equilibrium Value	0.2 μCi/gm
DE I-131 Pre-Accident Spike	4 μCi/gm

* Unchanged from existing UFSAR analysis.

Table A1-15
MSLB Accident Puff Release X/Q Inputs

Input/Assumption	Value
Mass Release	26,250 lbm steam 80,900 lbm water (saturated @ 1030psig)
Turbine Building Bubble Transverse Time to Control Room Fresh Air Intake (1 m/s wind speed)	136 seconds
Turbine Building Bubble Transverse Time to TSC Fresh Air Intake (1 m/s wind speed)	168 seconds

Table A1-16
X/Q Values for MSLB Accident Radiological Dose Calculations
(sec/m^3)

Time Period	Control Room Puff	TSC Puff	EAB	LPZ
0 – 2 hrs	9.98E-04	9.80E-04	1.90E-04	1.63E-05

Table A1-17
MSLB Calculated Radiological Consequences

(rem TEDE)

Case	Offsite Dose		Control Room Dose
	EAB	LPZ	(Puff Release)
4.0 μCi/gm DE I-131**	0.53	0.045	1.76
Regulatory Limit	25	25	5
Current Analysis* (Regulatory Limit) - rem	0.08 (25) Gamma 10.7 (300) Thyroid	0.008 (25) Gamma 2.7 (300) Thyroid	0.005 (5) Gamma 28.6 (30) Thyroid

* EAB and LPZ doses are the more limiting doses from UFSAR Table XV-8. Control room doses are from a letter from Niagara Mohawk Power Corporation to the NRC dated December 18, 1998 (Reference A1-8.25).

** Since these values are less than 2.5 rem TEDE (the acceptance criterion given in RG 1.183, Table 6 for the equilibrium iodine activity case), the equilibrium iodine activity case did not need to be analyzed.

Table A1-18
Refueling Accident Inputs

Input/Assumption	Value
Number of Failed Rods	2 full fuel assemblies*
Radial Peaking Factor	1.8
Fuel Decay Period	24 hrs
Pool Water Iodine Decontamination Factors (DF)	Elemental Iodine – 268 Organic Iodine – 1
Release Period	Instantaneous
Release Location	Reactor Building Panels
Release Fractions	Noble Gases Excluding Kr-85 5 % Kr-85 10 % I-131 8 % Iodines except I-131 5 %

* The activity inventory from two full fuel assemblies is released. This is bounding for the 125 damaged rods for GE 8x8 fuel assemblies or the 140 damaged rods for GE11 9x9 fuel assemblies determined for the current licensing basis.

Table A1-19
Refueling Accident Fission Product Inventory

Isotope	Ci/MWt t = 0	Ci/MWt Adjusted*	Ci/MWt t = 24 hr
Br-83	4.24E+03	**	**
Kr-83M	3.27E+03	same	negligible
Br-85	9.61E+03	**	**
Kr-85M	6.82E+03	same	166
Kr-85	3.93E+02	7.86E+02	786
Kr-87	1.30E+04	same	0.0281
Kr-88	1.83E+04	same	52.3
Kr-89	2.22E+04	same	negligible
Te-131M	3.97E+03	**	**
I-131	2.71E+04	4.34E+04	40060
Xe-131M	3.04E+02	same	303
Te-132	3.85E+04	**	**
I-132	3.92E+04	same	32048
Te-133M	2.30E+04	**	**
Te-133	3.39E+04	**	**
I-133	5.51E+04	same	24737
Xe-133M	1.63E+03	same	1480
Xe-133	5.27E+04	same	50900
Te-134	5.31E+04	**	**
I-134	6.03E+04	same	negligible
I-135	5.16E+04	same	4176
Xe-135M	1.09E+04	same	negligible
Xe-135	1.91E+04	same	12300
Xe-137	4.80E+04	same	negligible
Xe-138	4.50E+04	same	negligible

* Adjusted for direct decay and decay chains in which the radionuclide is a daughter product.
** Considered as parent only.

Table A1-20
X/Q Values for Refueling Accident
Radiological Dose Calculations

(sec/m^3)

Release Location	Release Timing				
	0-2 hrs	2-8 hrs	8–24 hr	1-4 days	4-30 days
EAB					
Ground	1.90E-04	–NA–	–NA–	–NA–	–NA–
LPZ					
Ground	1.63E-05		1.10E-05	4.67E-06	1.67E-06
Control Room					
Ground	4.82E-04	2.61E-04	9.25E-05	6.70E-05	4.93E-05

Table A1-21
Refueling Accident Calculated Radiological Consequences

(rem TEDE)

Case	**Offsite Dose**		**Control Room Dose**
	EAB	**LPZ**	
24 Hours after shutdown	0.447	0.0384	0.847
Regulatory Limit	6.3	6.3	5
Current Analysis* (Regulatory Limit) - rem	0.4 (25) Gamma 2.0 (300) Thyroid	---	---

* EAB doses are the more limiting doses from UFSAR Table XV-24.

Table A1-22
CRDA Inputs

Input/Assumption	Value
Number of Failed Rods	850*
Percent Fuel Melt for Failed Rods	No Melting
Radial Peaking Factor	1.8
Release Period (Case 1)	24 hours
Main Condenser Leakage Rate (Case 1)	1% per day for 24 hours
Main Condenser Volume	50,000 ft^3
Main Condenser Mechanical Vacuum Pump Flow Rate (Case 2)	2.8E+05 lbm/hr at 300 psia
Gap Release Fractions	Noble Gas 10% Iodine 10% Br 5% Cs, Rb 12%
Activity that Reaches the Condenser	Noble Gas 100% Iodine 10% Cs, Rb 1%
Airborne Activity Available for Release from the Condenser	Noble Gas 100% Iodine 10% Cs, Rb 1%

* Failure of 850 rods for GE 8x8 fuel assemblies is bounding for GE11 9x9 fuel assemblies. As noted in UFSAR Section XV-C.4.2, CRDA results for banked position withdrawal sequence (BPWS) plants have been statistically analyzed and show that, in all cases, the peak fuel enthalpy in a CRDA would be much less than the 280 cal/gm design limit. Thus, the CRDA has been deleted from the standard GE BWR reload package for BPWS plants.

Table A1-23
X/Q Values for CRDA Radiological Dose Calculations

(sec/m^3)

Release Location	Release Timing				
	0-2 hrs	2-8 hrs	8-24 hrs	1-4 days	4-30 days
EAB					
Ground	1.90E-04	–NA–	–NA–	–NA–	–NA–
Stack Normal	–NA–	–NA–	–NA–	–NA–	–NA–
Stack Fumigation	5.98E-05	–NA–	–NA–	–NA–	–NA–
LPZ					
Ground	1.63E-05		1.10E-05	4.67E-06	1.67E-6
Stack	2.12E-05		8.40E-07	3.45E-07	1.11E-07
Control Room					
Ground	1.03E-03	5.85E-04	2.07E-04	1.75E-04	1.52E-04
Stack Normal	–NA–	1.26E-04	4.30E-05	3.58E-05	2.59E-05
Stack Fumigation	2.27E-04	–NA–	–NA–	–NA–	–NA–

Table A1-24
CRDA Calculated Radiological Consequences

(rem TEDE)

Case	**Offsite Dose**		**Control Room Dose**
	EAB	**LPZ**	
Condenser Leakage	0.63	0.054	0.61
Mechanical Vacuum Pump	0.34	0.21	1.60
Regulatory Limit	6.3	6.3	5
Current Analysis* (Regulatory Limit) - rem	3.72E-02 (25) Gamma 6.82E-05 (300) Thyroid	4.29E-02 (25) Gamma 5.87E-04 (300) Thyroid	---

* EAB and LPZ doses are from UFSAR Section XV.C.4.5.2.

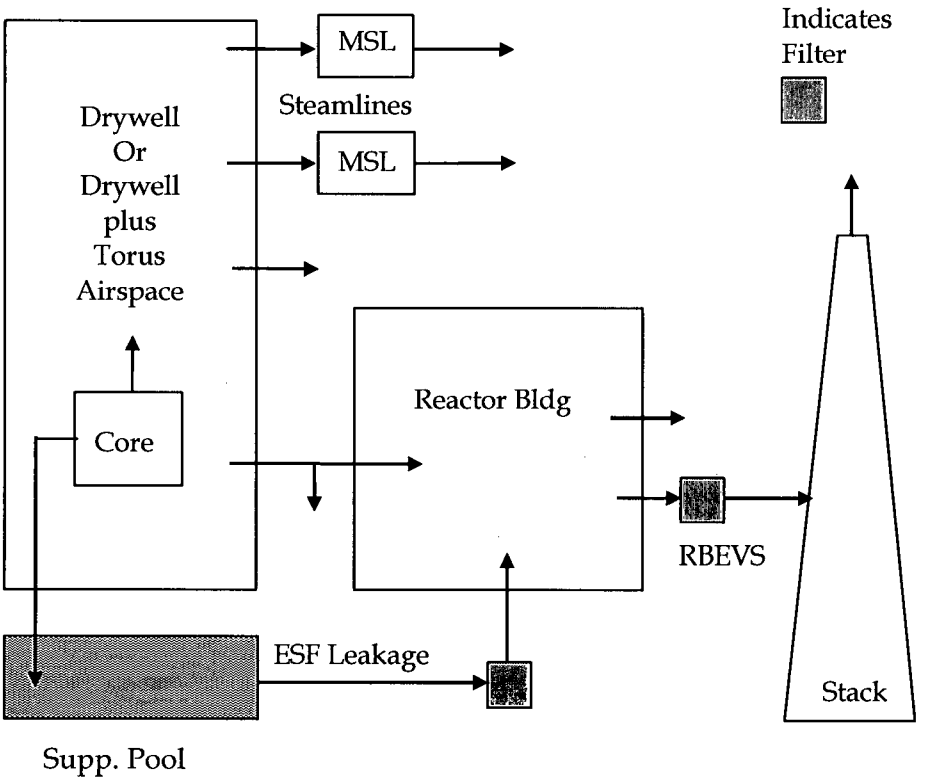

Figure A1-1

RADTRAD Modeling of LOCA Release Pathways

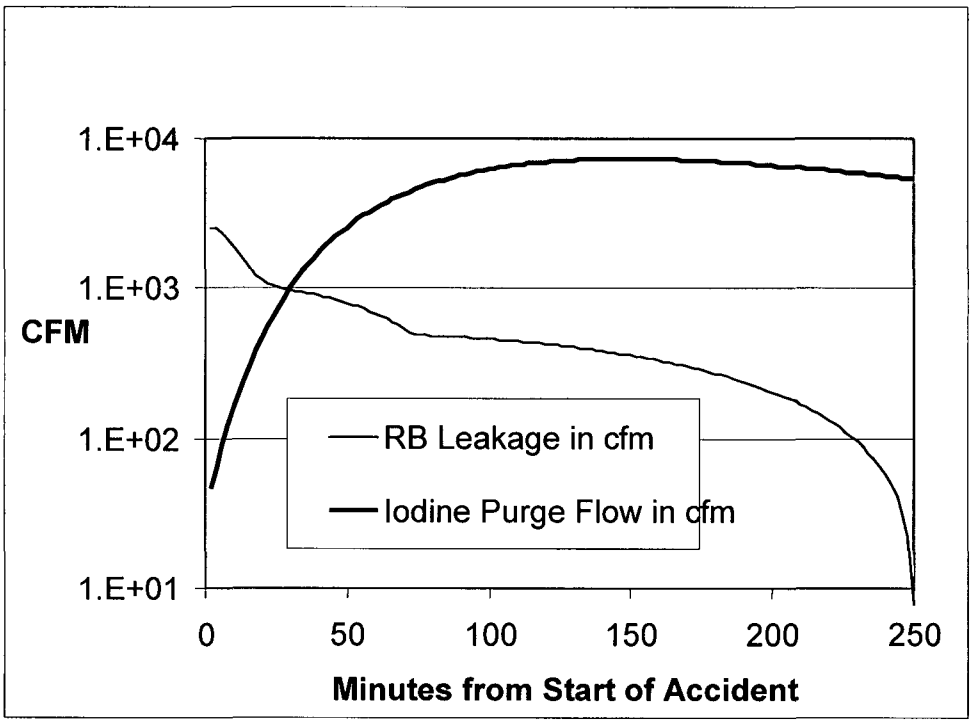

Figure A1-2

Reactor Building Leakage vs. Iodine Purge Flow

ATTACHMENT (2)

PROPOSED OPERATING LICENSE (OL) AND TECHNICAL SPECIFICATION (TS) CHANGES (MARK-UP)

Renewed OL Page
3

TS Pages
6
44
99
131
164
165
168
170
171
174
178
179
240
242

Nine Mile Point Nuclear Station, LLC
December 14, 2006

(3) Pursuant to the Act and 10 CFR Parts 30, 40, and 70 to receive, possess and use at any time any byproduct, source and special nuclear material as sealed neutron sources for reactor startup, sealed sources for reactor instrumentation and radiation monitoring equipment calibration, and as fission detectors in amounts as required;

(4) Pursuant to the Act and 10 CFR Parts 30, 40 and 70, to receive, possess and use in amounts as required any byproduct, source or special nuclear material without restriction to chemical or physical form, for sample analysis or instrument and equipment calibration or associated with radioactive apparatus or components.

(5) Pursuant to the Act and 10 CFR Parts 30 and 70, to possess, but not separate, such byproduct and special nuclear materials as may be produced by the operation of the facility.

C. This renewed operating license shall be deemed to contain and is subject to the conditions specified in the following Commission regulations in 10 CFR Chapter I:

Part 20, Section 30.34 of Part 30; Section 40.41 of Part 40; Section 50.54 and 50.59 of Part 50; and Section 70.32 of Part 70. This renewed license is subject to all applicable provisions of the Act and to the rules, regulations, and orders of the Commission now or hereafter in effect and is also subject to the additional conditions specified or incorporated below:

(1) Maximum Power Level

The licensee is authorized to operate the facility at steady state reactor core power levels not in excess of 1850 megawatts (thermal).

(2) Technical Specifications

The Technical Specifications contained in Appendix A, which is attached hereto, as revised through Amendment No. 191 is hereby incorporated into this license. Nine Mile Point Nuclear Station, LLC shall operate the facility in accordance with the Technical Specifications.

Deleted

(3) ~~The licensee shall submit an application for license amendment, including supporting analyses and evaluations by December 18, 1998. This amendment application shall contain the proposed methods for compliance with GDC 19 dose guidelines under accident conditions based upon system design and without reliance upon the use of potassium iodide.~~

1.16 ~~(Deleted)~~ Insert 1

1.17 ~~(Deleted)~~ Insert 2

1.18 (Deleted)

1.19 (Deleted)

1.20 (Deleted)

1.21 (Deleted)

INSERT 1 (for TS page 6; New TS Definition 1.16)

1.16 Dose Equivalent I-131

Dose Equivalent I-131 shall be that concentration of I-131 (microcuries/gram) that alone would produce the same dose as the quantity and isotopic mixture of I-131, I-132, I-133, I-134, and I-135 actually present. The dose conversion factors used for this calculation shall be the Committed Effective Dose Equivalent dose conversion factors listed in Table 2.1 of Federal Guidance Report No. 11, EPA, "Limiting Values of Radionuclide Intake and Air Concentration and Dose Conversion Factors for Inhalation, Submersion, and Ingestion," 1988.

INSERT 2 (for TS page 6; New TS Definition 1.17)

1.17 Recently Irradiated Fuel

Recently irradiated fuel is fuel that has occupied part of a critical reactor core within the previous 24 hours.

LIMITING CONDITION FOR OPERATION

3.1.2 LIQUID POISON SYSTEM

Applicability:

Applies to the operating status of the liquid poison system.

Objective:

To assure the capability of the liquid poison system to function as an independent reactivity control mechanism and as a post-LOCA suppression pool pH control mechanism.

Specification:

a. During ~~periods when fuel is in the reactor and the reactor is not shutdown by the control rods,~~ power operating conditions, and whenever the reactor coolant system temperature is greater than 212°F except for reactor vessel hydrostatic or leakage testing with the reactor not critical, the liquid poison system shall be operable except as specified in 3.1.2.b.

b. If a redundant component becomes inoperable, Specification 3.1.2.a shall be considered fulfilled, provided that the component is returned to an operable condition within 7 days and the additional surveillance required is performed.

SURVEILLANCE REQUIREMENT

4.1.2 LIQUID POISON SYSTEM

Applicability:

Applies to the periodic testing requirements for the liquid poison system.

Objective:

To specify the tests required to assure the capability of the liquid poison system for controlling core reactivity.

Specification:

The liquid poison system surveillance shall be performed as indicated below:

a. Overall System Test:

(1) At least once during each operating cycle -

Manually initiate the system from the control room. Demineralized water shall be pumped to the reactor vessel to verify minimum flow rates and demonstrate that valves and nozzles are not clogged.

LIMITING CONDITION FOR OPERATION

3.2.4 REACTOR COOLANT ACTIVITY

SPECIFIC

Applicability:

Applies to the limits on reactor coolant activity ~~at all operating conditions~~.

Specific

Objective:

To assure that in the event of a reactor coolant system line break outside the drywell permissible doses are not exceeded.

Specification:

Insert 3

a. ~~The reactor coolant system radioactivity concentration in water shall not exceed 9.47 microcuries of total iodine per gram of water.~~

Insert 4

b. ~~If Specification 3.2.4 a, above, cannot be met after a routine surveillance check, the reactor shall be placed in the cold shutdown condition within ten hours.~~

Insert 5

d ~~c.~~ The steady state ~~radioiodine concentration in the reactor coolant shall not exceed 1.5 microcuries of total iodine per gram of water~~ when the reactor coolant temperature is >215°F, the reactor is not critical, and primary containment integrity has not been established.

specific activity of the reactor coolant shall be limited to Dose Equivalent I-131 specific activity ≤ 0.2 μCi/gm

SURVEILLANCE REQUIREMENT

4.2.4 REACTOR COOLANT ACTIVITY

SPECIFIC

Applicability:

Applies to the periodic testing requirements of the reactor coolant activity.

Specific

Objective:

To assure that limits on coolant activity are not exceeded.

Specification:

~~a. Samples shall be taken at least every 96 hours and analyzed for gross gamma activity.~~

a ~~b.~~ ~~Isotopic analyses of samples shall be made at least once per month.~~

Insert 6

b ~~c.~~ ~~A sample of reactor coolant shall be taken and analyzed for radioactive iodines of I-131 through I-135~~ within 24 hours prior to raising the reactor coolant temperature >215°F, with the reactor not critical, and with primary containment integrity not established.

Verify that reactor coolant Dose Equivalent I-131 specific activity is ≤ 0.2 μCi/gm

INSERT 3 (for TS page 99; TS Section 3.2.4.a)

During the power operating and hot shutdown conditions, the specific activity of the reactor coolant shall be limited to Dose Equivalent I-131 specific activity ≤ 0.2 μCi/gm.

INSERT 4 (for TS page 99; TS Section 3.2.4.b)

If reactor coolant specific activity is > 0.2 μCi/gm and ≤ 4.0 μCi/gm Dose Equivalent I-131, determine the Dose Equivalent I-131 once per 4 hours and restore Dose Equivalent I-131 to within the limit of Specification 3.2.4.a within 48 hours.

INSERT 5 (for TS page 99; new TS Section 3.2.4.c)

c. If the required actions and completion times of Specification 3.2.4.b cannot be met, or if reactor coolant specific activity is > 4.0 μCi/gm Dose Equivalent I-131, place the reactor in the hot shutdown condition within 12 hours and in the cold shutdown condition within the following 24 hours.

INSERT 6 (for TS page 99; TS Section 4.2.4.a)

When the unit is in the power operating condition, verify that reactor coolant Dose Equivalent I-131 specific activity is ≤ 0.2 μCi/gm once per 7 days.

LIMITING CONDITION FOR OPERATION

3.3.3 LEAKAGE RATE

Applicability:

Applies to the allowable leakage rate of the primary containment system.

Objective:

10 CFR 50.67

To assure the capability of the containment in limiting radiation exposure to the public from exceeding values specified in ~~10 CFR 100~~ in the event of a loss-of-coolant accident accompanied by significant fuel cladding failure and hydrogen generation from a metal-water reaction.

To assure that periodic surveillances of reactor containment penetrations and isolation valves are performed so that proper maintenance and repairs are made during the service life of the containment, and systems and components penetrating primary containment.

Specification:

Whenever the reactor coolant system temperature is above 215°F and primary containment integrity is required, the primary containment leakage rate shall be limited to:

SURVEILLANCE REQUIREMENT

4.3.3 LEAKAGE RATE

Applicability:

Applies to the primary containment system leakage rate.

Objective:

To verify that the leakage from the primary containment system is maintained within specified values.

Specification:

a. The primary containment leakage rates shall be demonstrated at test schedules and in conformance with the criteria specified in the 10 CFR 50 Appendix J Testing Program Plan as described in Specification 6.5.7.

b. The provisions of Specification 4.0.2 are not applicable, and the surveillance interval extensions are in accordance with the 10 CFR 50 Appendix J Testing Program Plan.

3.4.0 REACTOR BUILDING

APPLICABILITY

(secondary containment)

Applies to the operating status of the reactor building.

OBJECTIVE

To assure the integrity of the reactor building.

SPECIFICATION

for the following conditions:

~~Reactor building integrity must be in effect in the refueling and power operating conditions, when the reactor water temperature is above 215°F, and also whenever irradiated fuel or the irradiated fuel cask is being handled in the reactor building.~~

a. Power operating condition,

b. When the reactor water temperature is above 215°F,

c. Whenever recently irradiated fuel or an irradiated fuel cask is being handled in the Reactor Building, and

d. During operations with a potential for draining the reactor vessel (OPDRVs).

At all times when secondary containment integrity is required,

LIMITING CONDITION FOR OPERATION

3.4.1 LEAKAGE RATE

Applicability:

Applies to the leakage rate of the secondary containment.

Objective:

To specify the requirements necessary to limit exfiltration of fission products released to the secondary containment as a result of an accident.

Specification:

~~Whenever the reactor is in the refueling or power operating condition or when the reactor coolant system temperature is above 215°F,~~ the reactor building leakage rate as determined by Specification 4.4.1 shall not exceed 1600 cfm. If this cannot be met after a routine surveillance check, then the actions listed below shall be taken:

a. ~~Suspend immediately irradiated fuel handling, fuel pool and reactor cavity activities, and irradiated fuel cask handling operations in the reactor building.~~

Insert 7

b. Restore the reactor building leakage rates to within specified limits within 4 hours or initiate normal orderly shutdown and be in a cold shutdown condition within 10 hours.

SURVEILLANCE REQUIREMENT

4.4.1 LEAKAGE RATE

Applicability:

Applies to the periodic testing requirements of the secondary containment leakage rate.

Objective:

To assure the capability of the secondary containment to maintain leakage within allowable limits.

Specification:

Once during each operating cycle - isolate the reactor building and start emergency ventilation system fan to demonstrate negative pressure in the building relative to external static pressure. The fan flow rate shall be varied so that the building internal differential pressure is at least as negative as that on Figure 3.4.1 for the wind speed at which the test is conducted. The fan flow rate represents the reactor building leakage referenced to zero mph with building internal pressure at least 0.25 inch of water less than atmospheric pressure. The test shall be done at wind speeds less than 20 miles per hour.

INSERT 7 (for TS page 165; TS Section 3.4.1.a)

a. Suspend any of the following activities:

   1. Handling of recently irradiated fuel in the reactor building,

   2. Irradiated fuel cask operations in the reactor building,

   3. Operations with a potential for draining the reactor vessel (OPDRVs).

LIMITING CONDITION FOR OPERATION

3.4.2 REACTOR BUILDING INTEGRITY - ISOLATION VALVES

Applicability:

Applies to the operational status of the reactor building isolation valves.

Objective:

To assure that fission products released to the secondary containment are discharged to the environment in a controlled manner using the emergency ventilation system.

Specification:

a. The normal Ventilation System isolation valves shall be operable ~~whenever the reactor is in the refueling or power operating conditions, when the reactor coolant system temperature is above 215°F, and whenever irradiated fuel or the irradiated fuel cask is being handled in the reactor building.~~

b. ~~If Specification 3.4.2a is not met, the reactor shall be in the cold shutdown condition within ten hours and handling of irradiated fuel cask shall cease.~~

Insert 8

SURVEILLANCE REQUIREMENT

4.4.2 REACTOR BUILDING INTEGRITY - ISOLATION VALVES

Applicability:

Applies to the periodic testing requirements of the reactor building isolation valves.

Objective:

To assure the operability of the reactor building isolation valves.

Specification:

At least once per operating cycle, automatic initiation of valves shall be checked.

at all times when secondary containment integrity is required.

INSERT 8 (for TS page 168; TS Section 3.4.2.b)

b. If specification 3.4.2.a is not met, then the actions listed below shall be taken:

1. The reactor shall be in the cold shutdown condition within ten hours.

2. Suspend any of the following activities:

   a. Handling of recently irradiated fuel in the reactor building,

   b. Irradiated fuel cask handling operations in the reactor building,

   c. Operations with a potential for draining the reactor vessel (OPDRVs).

LIMITING CONDITION FOR OPERATION

3.4.3 ACCESS CONTROL

Applicability:

Applies to the access control to the reactor building.

Objective:

To specify the requirements necessary to assure the integrity of the secondary containment system.

Specification:

a. ~~Whenever the reactor is in the power operating condition, or when the reactor coolant system temperature is above 215°F, or when irradiated fuel is being handled in the reactor building, or during core alterations, or during irradiated fuel cask handling operations in the reactor building,~~ the following conditions will be met:

1. Only one door in each of the double-doored access ways shall be opened at one time.

2. Only one door or closeup of the railroad bay shall be opened at one time.

3. The core spray and containment spray pump compartments' doors shall be closed at all times except during passage in order to consider the core spray system and the containment spray system operable.

SURVEILLANCE REQUIREMENT

4.4.3 ACCESS CONTROL

Applicability:

Applies to the periodic checking of the condition of portions of the reactor building.

Objective:

To assure that pump compartments are properly closed at all times and to assure the integrity of the secondary containment system by verifying that reactor building access doors are closed, as required by Specifications 3.4.3.a.1 and 3.4.3.a.2.

Specification:

a. The core and containment spray pump compartments shall be checked once per week and after each entry.

At all times when secondary containment integrity is required,

LIMITING CONDITION FOR OPERATION

b. If these conditions cannot be met, then the actions listed below shall be taken:

1. If in the power operating condition, restore reactor building integrity within 4 hours or be in at least the hot shutdown condition within the next 12 hours and in the cold shutdown condition within the following 24 hours.

OR

If the reactor coolant system temperature is above 215°F, restore reactor building integrity within 4 hours or be in cold shutdown within the following 24 hours.

2. Suspend any of the following activities:

~~a. core alterations,~~

a ~~b.~~ Handling of recently irradiated fuel in the reactor building,

b ~~c.~~ Irradiated fuel cask handling operations in the reactor building,

Add — c. Operations with a potential for draining the reactor vessel (OPDRVs).

SURVEILLANCE REQUIREMENT

b. Verify at least once per 31 days that:

1. At least one door in each access to the secondary containment is closed.

2. At least one door or closeup of the railroad bay is closed.

(No Changes - For Information Only)

LIMITING CONDITION FOR OPERATION	SURVEILLANCE REQUIREMENT
3.4.4 EMERGENCY VENTILATION SYSTEM	4.4.4 EMERGENCY VENTILATION SYSTEM
Applicability:	Applicability:
Applies to the operating status of the emergency ventilation system.	Applies to the testing of the emergency ventilation system.
Objective:	Objective:
To assure the capability of the emergency ventilation system to minimize the release of radioactivity to the environment in the event of an incident within the primary containment or reactor building.	To assure the operability of the emergency ventilation system.
Specification:	Specification:
a. Except as specified in Specification 3.4.4e below, both circuits of the emergency ventilation system shall be operable at all times when secondary containment integrity is required.	Emergency ventilation system surveillance shall be performed as indicated below:
b. The results of the in-place cold DOP and halogenated hydrocarbon tests at design flows on HEPA filters and charcoal adsorber banks shall show ≥ 99% DOP removal and ≥ 99% halogenated hydrocarbon removal when tested in accordance with ANSI N.510-1980.	a. At least once per operating cycle, not to exceed 24 months, the following conditions shall be demonstrated: (1) Pressure drop across the combined HEPA filters and charcoal adsorber banks is less than 6 inches of water at the system rated flow rate (± 10%). (2) Operability of inlet heater at rated power when tested in accordance with ANSI N.510-1980.

LIMITING CONDITION FOR OPERATION

c. The results of laboratory carbon sample analysis shall show ≥95% radioactive methyl iodide removal when tested in accordance with ASTM D3803-1989 at 30°C and 95% R.H.

d. Fans shall be shown to operate within ±10% design flow.

e. During reactor operation, including when the reactor coolant system temperature is above 215°F, from and after the date that one circuit of the emergency ventilation system is made or found to be inoperable for any reason, reactor operation is permissible only during the succeeding seven days unless such circuit is sooner made operable, provided that during such seven days all active components of the other emergency ventilation circuit shall be operable.

Insert 9

During ~~refueling~~, from and after the date that one circuit of the emergency ventilation system is made or found to be inoperable for any reason, ~~fuel handling~~ ~~is~~ permissible during the succeeding seven days unless such circuit is sooner made operable, provided that during such seven days all active components of the other emergency ventilation circuit shall be operable.

Insert 10

Insert 11

~~Fuel handling~~ may continue beyond seven days provided the operable emergency ventilation circuit is in operation.

f. If these conditions cannot be met, within 36 hours, the reactor shall be placed in a condition for which the emergency ventilation system is not required.

SURVEILLANCE REQUIREMENT

b. The tests and sample analysis of Specification 3.4.4b, c and d shall be performed at least once per operating cycle or once every 24 months, or after 720 hours of system operation, whichever occurs first or following significant painting, fire or chemical release in any ventilation zone communicating with the system.

c. Cold DOP testing shall be performed after each complete or partial replacement of the HEPA filter bank or after any structural maintenance on the system housing.

d. Halogenated hydrocarbon testing shall be performed after each complete or partial replacement of the charcoal adsorber bank or after any structural maintenance on the system housing.

e. Each circuit shall be operated with the inlet heater on at least 10 hours every month.

f. Test sealing of gaskets for housing doors downstream of the HEPA filters and charcoal adsorbers shall be performed at and in conformance with each test performed for compliance with Specification 4.4.4b and Specification 3.4.4b.

INSERT 9 (for TS page 174; TS Section 3.4.4.e)

handling of recently irradiated fuel in the reactor building, handling of an irradiated fuel cask in the reactor building, and operations with a potential for draining the reactor vessel (OPDRVs),

---

INSERT 10 (for TS page 174; TS Section 3.4.4.e)

recently irradiated fuel handling in the reactor building, irradiated fuel cask handling in the reactor building, or OPDRVs are

---

INSERT 11 (for TS page 174; TS Section 3.4.4.e)

Recently irradiated fuel handling in the reactor building, irradiated fuel cask handling in the reactor building, or OPDRVs

LIMITING CONDITION FOR OPERATION

3.4.5 CONTROL ROOM AIR TREATMENT SYSTEM

Applicability:

Applies to the operating status of the control room air treatment system.

Objective:

To assure the capability of the control room air treatment system to minimize the amount of radioactivity or other gases entering the control room in the event of an incident.

Specification:

a. Except as specified in Specification 3.4.5e below, the control room air treatment system shall be operable ~~during refueling and power operating conditions and also whenever irradiated fuel or the irradiated fuel cask is being handled in the reactor building.~~

Insert 12

b. The results of the in-place cold DOP and halogenated hydrocarbon tests at design flows on HEPA filters and charcoal adsorber banks shall show ≥ 99% DOP removal and ≥ 99% halogenated hydrocarbon removal when tested in accordance with ANSI N.510-1980.

SURVEILLANCE REQUIREMENT

4.4.5 CONTROL ROOM AIR TREATMENT SYSTEM

Applicability:

Applies to the testing of the control room air treatment system.

Objective:

To assure the operability of the control room air treatment system.

Specification:

a. At least once per operating cycle, or once every 24 months, whichever occurs first, the pressure drop across the combined HEPA filters and charcoal adsorber banks shall be demonstrated to be less than 1.5 inches of water at system design flow rate (± 10%).

b. The tests and sample analysis of Specification 3.4.5b, c and d shall be performed at least once per operating cycle or once every 24 months, or after 720 hours of system operation, whichever occurs first or following significant painting, fire or chemical release in any ventilation zone communicating with the system.

recently irradiated fuel handling, irradiated fuel cask handling, or OPDRVs are

LIMITING CONDITION FOR OPERATION

c. The results of laboratory carbon sample analysis shall show ≥95% radioactive methyl iodine removal when tested in accordance with ASTM D3803-1989 at 30°C and 95% R.H.

d. Fans shall be shown to operate within ±10% design flow.

e. From and after the date that the control room air treatment system is made or found to be inoperable for any reason, reactor operation ~~or refueling operations is~~ permissible only during the succeeding seven days unless the system is sooner made operable.

Insert 13

f. If these conditions cannot be met, ~~reactor shutdown shall be initiated and the reactor shall be in cold shutdown within 36 hours for reactor operations and refueling operations shall be terminated within 2 hours.~~

SURVEILLANCE REQUIREMENT

c. Cold DOP testing shall be performed after each complete or partial replacement of the HEPA filter bank or after any structural maintenance on the system housing.

d. Halogenated hydrocarbon testing shall be performed after each complete or partial replacement of the charcoal absorber bank or after any structural maintenance on the system housing.

e. The system shall be operated at least 10 hours every month.

f. At least once per operating cycle, not to exceed 24 months, automatic initiation of the control room air treatment system shall be demonstrated.

g. At least once per operating cycle, not to exceed 24 months, the control room air treatment system shall be shown to maintain a positive pressure within the control room of greater than one sixteenth of an inch (water) relative to areas adjacent to the control room.

INSERT 12 (for TS page 178; TS Section 3.4.5.a)

for the following conditions:

1. Power operating condition,

2. Whenever recently irradiated fuel or an irradiated fuel cask is being handled in the reactor building, and

3. During operations with a potential for draining the reactor vessel (OPDRVs).

INSERT 13 (for TS page 179; TS Section 3.4.5.f)

then the actions listed below shall be taken:

1. If in the power operating condition, reactor shutdown shall be initiated and the reactor shall be in cold shutdown within 36 hours.

2. Suspend any of the following activities within 2 hours:

   a. Handling of recently irradiated fuel in the reactor building,

   b. Irradiated fuel cask handling operations in the reactor building,

   c. Operations with a potential for draining the reactor vessel (OPDRVs).

TABLE 3.6.2j

EMERGENCY VENTILATION INITIATION

Limiting Condition for Operation

	Parameter	Minimum No. of Tripped or Operable Trip Systems	Minimum No. of Operable Instrument Channels per Operable Trip System	Set Point	Reactor Mode Switch Position in Which Function Must Be Operable			
					Shutdown	Refuel	Startup	Run
(1)	High Radiation Reactor Building Ventilation Duct	1	2(d)	≤ 5mr/hr	x	(a) ~~x~~	x	x
(2)	High Radiation Refueling Platform	1	1	≤ 1000mr/hr	(a)	(a)	(a)	(a)

whenever recently

NOTES FOR TABLES 3.6.2j AND 4.6.2j

(a) This function shall be operable ~~any time that~~ irradiated fuel or ~~the~~ an irradiated fuel cask is being handled in the reactor building, and during operations with a potential for draining the reactor vessel (OPDRVs).

(b) Once per shift whenever this function is required to be operable.

(c) Immediately prior to when function is required and once per week thereafter until function is no longer required.

(d) A channel may be placed in an inoperable status for up to 6 hours for required surveillances without placing the Trip System in the tripped condition provided at least one Operable Instrument Channel in the same Trip system is monitoring that parameter.

With the number of Operable channels one less than required by the Minimum Number of Operable Instrument Channels for the Operable Trip System, either

1) Place the inoperable channel(s) in the tripped condition within 24 hours.
or
2) Take the ACTION required by Specification 3.6.2a for that Parameter.

ATTACHMENT (3)

CHANGES TO TECHNICAL SPECIFICATION BASES (MARK-UP)

The current versions of the following Technical Specifications Bases pages have been marked-up by hand to reflect the proposed changes. These Bases pages are provided for information only and do not require NRC approval.

40
49
100
140
141
142
167
169
172
176
180
296

a. A startup inter-assembly local power peaking factor of 1.30 or less.[6]

b. An end of cycle delayed neutron fraction of 0.005.

c. A beginning of life Doppler reactivity feedback.

d. The Technical Specification rod scram insertion rate.

e. The maximum possible rod drop velocity (3.11 ft/sec).

f. The design accident and scram reactivity shape function.

g. The moderator temperature at which criticality occurs.

It is recognized that these bounds are conservative with respect to expected operating conditions. If any one of the above conditions is not satisfied, a more detailed calculation will be done to show compliance with the 280 cal/gm design limit.

In most cases the worth of in-sequence rods or rod segments will be substantially less than 0.013 Δk. Further, the addition of 0.013 Δk worth of reactivity as a result of a rod drop in conjunction with the actual values of the other important accident analysis parameters described above would most likely result in a peak fuel enthalpy substantially less than the 280 cal/gm design limit. However, the 0.013 Δk limit is applied in order to allow room for future reload changes and ease of verification without repetitive Technical Specification changes.

Should a control rod drop accident (CRDA) result in a peak fuel energy content of 280 cal/gm, less than 660 (7 x 7) fuel rods are conservatively estimated to perforate. ~~This would result in offsite doses greater than previously reported in the FSAR, but still well below the guideline values of 10 CFR 100.~~ For 8 x 8 fuel, less than 850 rods are conservatively estimated to perforate, ~~which has nearly the same consequences as for the 7 x 7 fuel case because of the operating rod power rod differences.~~

Were

Insert K

Were

INSERT K (for TS page 40; Bases for TS Sections 3.1.1 and 4.1.1)

which is bounding for GE11 9x9 fuel. As noted in UFSAR Section XV-C.4.2, CRDA results for banked position withdrawal sequence (BPWS) plants have been statistically analyzed and show that, in all cases, the peak fuel enthalpy in a CRDA would be much less than the 280 cal/gm design limit. Thus, the CRDA has been deleted from the standard GE BWR reload package for BPWS plants. The radiological consequences of a CRDA have been shown to remain well within the regulatory limits.

Insert A

Nearly all maintenance can be completed within a few days. Infrequently, however, major maintenance might be required. Replacement of principal system components could necessitate outages of more than 7 days. In spite of the best efforts of the operator to return equipment to service, some maintenance could require up to 6 months.

The system test specified demonstrates component response such as pump starting upon manual system initiation and is similar to the operating requirement under accident conditions. The only difference is that demineralized water rather than the boron solution will be pumped to the reactor vessel. The test interval between operating cycles results in a system failure probability of 1.1×10^{-6} (Fifth Supplement, p. 115)* and is consistent with practical considerations.

Pump operability will be demonstrated on a more frequent basis. A continuity check of the firing circuit on the explosive valves is provided by pilot lights in the control room. Tank level and temperature alarms are provided to alert the operator of off-normal conditions.

The functional test and other surveillance on components, along with the monitoring instrumentation, gives a high reliability for liquid poison system operability.

*FSAR

INSERT A (for TS Page 49; Bases for TS Sections 3.1.2 and 4.1.2)

The liquid poison system also has a post-LOCA safety function to buffer the suppression pool pH in order to maintain the bulk pH above 7.0. This function is necessary to prevent iodine re-evolution consistent with the Alternate Source Term analysis methodology. Manual system initiation is used, and the minimum amount of sodium pentaborate solution required to be injected for suppression pool pH buffering is 1114 gallons at a minimum concentration of 9.423 weight percent. This volume consists of the minimum required volume of 1325 gallons minus the 197 gallons which is contained below the point where the pump takes suction from the storage tank and minus 14 gallons that is assumed to remain in the pump suction and discharge piping after injection stops. Operation of a single liquid poison pump can satisfy this post-LOCA function. This function applies to the power operating condition, and also whenever the reactor coolant system temperature is greater than 212°F except for reactor vessel hydrostatic or leakage testing with the reactor not critical.

Insert B

BASES FOR 3.2.4 AND 4.2.4 REACTOR COOLANT SPECIFIC ACTIVITY

The primary coolant radioactivity concentration limit of 25 μCi total iodine per gram of water was calculated based on a steamline break accident which is isolated in 10.5 seconds. For this accident analysis, all the iodine in the mass of coolant released in this time period is assumed to be released to the atmosphere at the top of the turbine building (30 meters). By limiting the thyroid dose at the site boundary to a maximum of 30 Rem, the iodine concentration in the primary coolant is back-calculated assuming fumigation meteorology, Pasquill Type F at 1m/sec. The iodine concentration in the primary coolant resulting from this analysis is 25 μCi/gm.

A radioactivity concentration limit of 25 μCi/g total iodine could only be reached if the gaseous effluents were near the limit based on the assumed effluent isotopic content (Table A-12 of the FSAR) and the fact that the primary coolant cleanup systems were inoperative. When the cleanup system is operating, it is expected that the primary coolant radioactivity would be about 12 μCi/g total iodine. The concentrations expected during operations with a gaseous effluent of about 0.1 μCi/sec would be about 1.5 μCi/g total iodine.

The reactor water sample isotopic analyses of (5) will be used to assure that the limit of Specification 3.2.4 is not exceeded. ~~The total radioactive iodine activity would not be expected to change rapidly over a period of 96 hours.~~ In addition, the trend of the stack offgas release rate, which is continuously monitored, is a good indicator of the trend of the iodine activity in the reactor coolant.

Insert C

Since the concentration of radioactivity in the reactor coolant is not continuously measured, coolant sampling would be ineffective as a means to rapidly detect gross fuel element failures. However, as discussed in the bases for Specification 3.6.2, some capability to detect gross fuel element failures is inherent in the radiation monitors in the offgas system and on the main steam lines.

A more restrictive reactor coolant total iodine limit has been imposed for Control Room habitability purposes only. A limit of 9.47 μCi/g is imposed based on the most limiting small break LOCA outside containment. Provided reactor coolant iodine is maintained at or below this value, the Control Room Air Treatment System would not be required to maintain the radiological effects of the line break below GDC19 dose limits.

In the event of a large primary system break under reactor vessel hydrostatic or leakage test conditions with the reactor coolant temperature >215°F, the reactor not critical, and primary containment integrity not established, calculations show the resultant radiological dose at the exclusion area boundary to be conservatively bounded by the dose calculated for a main steam line break outside primary containment. This dose was calculated on the basis of the ~~radioiodine concentration limit of 1.5 μCi of total iodine per gram of water.~~ The reactor coolant sample required by Specification 4.2.4.~~c~~ (b) will be used to assure that the limit of Specification 3.2.4.~~c~~ (d) is not exceeded. The sample shall be taken during steady state conditions to ensure the results are representative of the steady state radioactive concentration for reactor vessel hydrostatic or leakage test conditions.

reactor coolant specific activity limit of 0.2 μCi/gm Dose Equivalent I-131.

INSERT B (for TS Page 100; Bases for TS Sections 3.2.4 and 4.2.4)

The specific activity in the reactor coolant is an initial condition for evaluation of the radiological consequences of a main steam line break (MSLB) outside of primary containment. No fuel damage is postulated in the MSLB accident, and the release of radioactive material to the environment is assumed to end when the main steam isolation valves (MSIVs) close completely. The specific iodine activity is limited to ≤ 0.2 μCi/gm Dose Equivalent I-131. This limit ensures that the source term assumed in the radiological consequences analysis for the MSLB accident is not exceeded, so that any release of radioactivity to the environment during a MSLB results in offsite and control room radiation doses that satisfy the acceptance criteria of 10 CFR 50.67 and Regulatory Guide 1.183. It is also conservative with respect to the value used in the radiological consequences analyses for other postulated small break loss of coolant accidents outside of primary containment and for postulated instrument line breaks.

The limits on reactor coolant specific activity are applicable in the power operating and hot shutdown conditions, since there is an escape path for release of radioactive material from the reactor coolant system to the environment in the event of an MSLB outside of primary containment. In the cold shutdown, refueling, and major maintenance conditions, no limits are required since the reactor is not pressurized and the potential for leakage is reduced.

When the reactor coolant specific activity exceeds the limit of 0.2 μCi/gm Dose Equivalent I-131, but is ≤ 4.0 μCi/gm, samples must be analyzed for Dose Equivalent I-131 at least once every 4 hours. In addition, the specific activity must be restored to the limit within 48 hours. The completion time of once every 4 hours is based on the time needed to take and analyze a sample. The 48 hour completion time to restore the activity level provides a reasonable time for temporary coolant activity increases (iodine spikes or crud bursts) to be cleaned up with the normal processing systems.

INSERT C (for TS page 100; Bases for TS Sections 3.2.4 and 4.2.4)

during normal operation. The 7 day frequency is adequate to trend changes in the iodine activity level. The surveillance requirement need only be performed during the power operating condition because the level of fission products generated in other operating conditions is much less.

The primary containment preoperational test pressures are based upon the calculated primary containment pressure response in the event of a loss-of-coolant accident. The peak drywell pressure would be 35 psig which would rapidly reduce to 22 psig within 100 seconds following the pipe break. The total time the drywell pressure would be above 22 psig is calculated to be about 10 seconds. Following the pipe break, the suppression chamber pressure rises to 22 psig within 10 seconds, equalizes with drywell pressure and thereafter rapidly decays with the drywell pressure decay.[1]

The design pressures of the drywell and suppression chamber are 62 psig and 35 psig, respectively.[2] As pointed out above, the pressure response of the drywell and suppression chamber following an accident would be the same after about 10 seconds. Based on the calculated primary containment pressure response discussed above and the suppression chamber design pressure; primary containment preoperational test pressures were chosen. Also, based on the primary containment pressure response and the fact that the drywell and suppression chamber function as a unit, the primary containment will be tested as a unit rather than testing the individual components separately.

The design basis loss-of-coolant accident was evaluated at the primary containment maximum allowable accident leak rate of 1.9%/day at 35 psig. The analysis showed that with this leak rate and a standby gas treatment system filter efficiency of 90 percent for halogens, 95 percent for particulates, and assuming the fission product release fractions stated in TID-14844, the maximum total whole body passing cloud dose is about 6.0 rem and the maximum total thyroid dose is about 150 rem at the site boundary considering fumigation conditions over an exposure duration of two hours. The resultant doses would occur for the duration of the accident at the low population distance of 4 miles are lower than those stated due to the variability of meteorological conditions that would be expected to occur over a 30-day period. Thus, the doses reported are the maximum that would be expected in the unlikely event of a design basis loss-of-coolant accident. These doses are also based on the assumption of no holdup in the secondary containment resulting in a direct release of fission products from the primary containment through the filters and stack to the environs. Therefore, the specified primary containment leak rate and filter efficiency (Specification 4.4.4) are conservative and provide margin between expected offsite doses and 10CFR100 guideline limits.

The maximum allowable leakage rate (L_a) is 1.5%/day at a pressure of 35 psig (P_a). This value for the test condition was derived from the maximum allowable accident leak rate of about 1.9%/day when corrected for the effects of containment environment under accident and test conditions. In the accident case, the containment atmosphere initially would be composed of steam and hot air depleted of oxygen whereas under test conditions the test medium would be air or nitrogen at ambient conditions. Considering the differences in mixture composition and temperatures, the appropriate correction factor applied was 0.8 and determined from the guide on containment testing.[3]

Insert J

~~Although the dose calculations suggest that the allowable test leak rate could be allowed to increase to about 3.0%/day before the guideline thyroid dose limit given in 10CFR100 would be exceeded, establishing the limit at 1.5%/day provides an adequate margin of safety to assure the health and safety of the general public. It is further considered that the allowable leak rate should not deviate significantly from the containment design value to take advantage of the design leak-tightness capability of the structure over its service lifetime. Additional margin to maintain the containment in the "as built" condition is achieved by establishing the allowable operational leak rate. The operational limit is derived by multiplying the allowable test leak rate by 0.75 thereby providing a 25% margin to allow for leakage deterioration which may occur during the period between leak rate tests.~~

Closure of the containment isolation valves for the purpose of the test is accomplished by the means provided for normal operation of the valves. The reactor is vented to the containment atmosphere during ILRT testing.

The primary containment leak rate test frequency is based on maintaining adequate assurance that the leak rate remains within the specification. The leak rate test frequency is based on Option B of 10 CFR 50 Appendix J.

The penetration and air purge piping leakage test frequency, along with the containment leak rate tests, is adequate to allow detection of leakage trends. Whenever a double-gasketed penetration (primary containment head equipment hatches and the suppression chamber access hatch) is broken and remade, the space between the gaskets is pressurized to determine that the seals are performing properly. The test pressure of 35 psig is consistent with the accident analyses and the maximum preoperational leak rate test pressure. It is expected that the majority of the leakage from valves, penetrations and seals would be into the reactor building. However, it is possible that leakage into other parts of the facility could occur. Such leakage paths that may affect significantly the consequences of accidents are to be minimized.

Leakage from airlocks is measured under accident pressures in accordance with Option B of 10 CFR 50 Appendix J.

INSERT J (for TS page 140; Bases for TS Sections 3.3.3 and 4.3.3)

The function of the primary containment is to isolate and contain fission products released from the reactor coolant system following design basis accidents (DBA). The primary containment provides an essentially leak tight barrier against an uncontrolled release of radioactive material to the environment. The DBA that postulates the maximum release of radioactive material within the primary containment is a loss of coolant accident (LOCA). In the analysis of this accident, it is assumed that primary containment integrity is maintained such that release of fission products to the environment is controlled by the rate of primary containment leakage.

The LOCA radiological consequence analysis is based on an alternate source term (AST) methodology (10 CFR 50.67 and Regulatory Guide 1.183). This analysis concluded that the calculated total effective dose equivalent (TEDE) values to the control room occupants, the exclusion area boundary, and the low population zone are within the TEDE criteria established in 10 CFR 50.67. Primary containment leakage at the rate of 1.5% by weight of the containment air per 24 hours is assumed in the accident analysis. Margin is achieved by establishing the allowable operational leak rate. The operational limit is derived by multiplying the allowable test leak rate by 0.75 thereby providing a 25% margin to allow for leakage deterioration which may occur during the periods between leak rate tests.

The Type A test follows the guidelines stated in ANSI/ANS-56.8[8] and/or the Bechtel Topical Report.[4] This program provides adequate assurance that the test results realistically estimates the degree of containment leakage following a loss-of-coolant accident. The containment leakage rate is calculated using the Absolute Methodology.[8]

The specific treatment of selective valve arrangements including the acceptability of the interpretations of 10 CFR 50 Appendix J requirements are given in References 5, 6, and 7. Core Spray and Containment Spray suction valves will be tested in accordance with the IST Program.

References:

(1) FSAR, Volume II, Appendix E

(2) UFSAR, Section VI B.2.1 (Deleted)

(3) ~~TID-20583, Leakage Characteristics of Steel Containment Vessels and the Analysis of Leakage Determinations~~

(4) BN-TOP-1 "Testing Criteria for Integrated Leakage Rate Testing of Primary Containment Structures for Nuclear Power Plants," Revision 1, Bechtel Corporation, November 1, 1972

(5) NRC Safety Evaluation Report dated May 6, 1988, "Regarding Proposed Technical Specifications and Exemption Requests Related to Appendix J."

(6) Niagara Mohawk Letter dated July 28, 1988, "Clarifications, Justifications & Conformance with 10 CFR 50 Appendix J SER."

(7) NRC Letter dated November 9, 1988, "Review of the July 28, 1988 Letter on Appendix J Containment Leakage Rate Testing at Nine Mile Point Unit 1."

(8) ANSI/ANS - 56.8 - 1994, "Containment System Leakage Testing Requirements."

Insert D

In the answers to Questions II-3 and IV-5 of the Second Supplement and also in the Fifth Supplement*, the relationships among wind speed, direction, pressure distribution outside the building, building internal pressure, and reactor building leakage are discussed. The curve of pressure in Figure 3.4.1 represents the wind direction which results in the least building leakage. It is assumed that when the test is performed, the wind direction is that which gives the least leakage.

If the wind direction was not from the direction which gave the least reactor building leakage, building internal pressure would not be as negative as Figure 3.4.1 indicates. Therefore, to reduce pressure, the fan flow rate would have to be increased. This erroneously indicates that reactor building leakage is greater than if wind direction were accounted for. If wind direction were accounted for, another pressure curve could be used which was less negative. This would mean that less fan flow (or measured leakage) would be required to establish building pressure. However, for simplicity it is assumed that the test is conducted during conditions leading to the least leakage while the accident is assumed to occur during conditions leading to the greatest reactor building leakage.

As discussed in the Second Supplement and Fifth Supplement, the pressure for Figure 3.4.1 is independent of the reactor building leakage rate referenced to zero mph wind speed at a negative differential pressure of 0.25 inch of water. Regardless of the leakage rate at these design conditions, the pressure versus wind speed relationship remains unchanged for any given wind direction.

By requiring the reactor building pressure to remain within the limits presented in Figure 3.4.1 and a reactor building leakage rate of less than 1600 cfm, exfiltration would be prevented. This would assure that the leakage from the primary containment is directed through the filter system and discharged from the 350-foot stack.

*FSAR

INSERT D (for TS page 167; Bases for TS Sections 3.4.1 and 4.4.1)

The secondary containment is designed to minimize any ground level release of radioactive materials that might result from a serious accident. The reactor building provides secondary containment during reactor operation, when the drywell is sealed and in service. The reactor building provides primary containment during periods when the reactor is shutdown, the drywell is open, and activities are ongoing that require secondary containment to be in effect.

There are two principal accidents for which credit is taken for reactor building (secondary containment) integrity. These are a loss of coolant accident (LOCA) and a refueling accident involving "recently irradiated" fuel. The reactor building performs no active function in response to each of these limiting events; however, its leak tightness is required to ensure that the release of radioactive materials is restricted to those leakage paths and associated leakage rates assumed in the accident analysis and that fission products entrapped within the reactor building structure will be treated by the Reactor Building Emergency Ventilation System (RBEVS) prior to discharge to the environment.

In addition to these limiting events, events occurring during handling of an irradiated fuel cask and operations with a potential for draining the reactor vessel (OPDRVs) can be postulated to cause a fission product release. During these events, the reactor building would be the only barrier to a release to the environment. Thus, reactor building integrity is required during handling of an irradiated fuel cask and during OPDRVs.

The Refueling Accident analysis is based on an alternate source term (AST) methodology (10 CFR 50.67 and Regulatory Guide 1.183). This analysis concluded that the calculated total effective dose equivalent (TEDE) values to the control room occupants, the exclusion area boundary, and the low population zone are well below the TEDE criteria established in 10 CFR 50.67 without crediting reactor building integrity, operation of the RBEVS, or operation of the Control Room Air Treatment System (CRATS), as long as the fuel is allowed to decay for at least 24 hours following reactor shutdown. As a result, "recently irradiated" fuel is defined as fuel that has occupied part of a critical reactor core within 24 hours; i.e., reactor fuel that has decayed less than 24 hours following reactor shutdown. Therefore, reactor building integrity is not required, and RBEVS and CRATS are not required to be operable, during movement of decayed irradiated fuel that is no longer considered "recently irradiated." Conversely, reactor building integrity is required, and RBEVS and CRATS are required to be operable, during movement of recently irradiated fuel assemblies.

Isolation of the reactor building occurs automatically upon high radiation of the normal building exhaust ducts or from high radiation at the refueling platform (See 3.6.2). Isolation will assure that any fission products entering the reactor building will be routed to the emergency ventilation system prior to discharge to the environment (Section VII-H.3.0 of the FSAR).

Insert E

INSERT E (for TS page 169; Bases for TS Sections 3.4.2 and 4.4.2)

The two principal accidents for which the reactor building isolation valves must be operable are a loss of coolant accident (LOCA) and a refueling accident involving "recently irradiated" fuel. In addition to these limiting events, events occurring during handling of an irradiated fuel cask and operations with a potential for draining the reactor vessel (OPDRVs) can be postulated to cause a fission product release. During these events, the reactor building would be the only barrier to a release to the environment. Thus, the reactor building isolation valves are required to be operable during handling of an irradiated fuel cask and during OPDRVs.

The Refueling Accident analysis is based on an alternate source term (AST) methodology (10 CFR 50.67 and Regulatory Guide 1.183). This analysis concluded that the calculated total effective dose equivalent (TEDE) values to the control room occupants, the exclusion area boundary, and the low population zone are well below the TEDE criteria established in 10 CFR 50.67 without crediting reactor building integrity or operation of the reactor building emergency ventilation system (RBEVS), as long as the fuel is allowed to decay for at least 24 hours following reactor shutdown. As a result, "recently irradiated" fuel is defined as fuel that has occupied part of a critical reactor core within 24 hours; i.e., reactor fuel that has decayed less than 24 hours following reactor shutdown. Therefore, reactor building integrity is not required and the reactor building isolation valves are not required to be operable during movement of decayed irradiated fuel that is no longer considered "recently irradiated." Conversely, reactor building integrity is required and the reactor building isolation valves are required to be operable during movement of recently irradiated fuel assemblies.

Insert F

BASES FOR 3.4.3 AND 4.4.3 ACCESS CONTROL

~~The reactor building serves as a secondary containment when the reactor coolant system temperature is above 215°F and during normal Station operations and as a primary containment during refueling and other periods when the reactor coolant system temperature is above 215°F and the pressure suppression system is open or not required. Maintaining the building integrity and an operative emergency ventilation system for the conditions listed will ensure that any fission products inadvertently released to the reactor building will be routed through the emergency ventilation system to the stack. The worst such incident is due to dropping a fuel assembly on the core during refueling. The consequences of this are discussed in Section XV.C.3 of the FSAR.~~

As discussed in Section VI-F* all access openings of the reactor building have as a minimum two doors in series. Appropriate local alarms and control room indicators are provided to always insure that reactor building integrity is maintained. Surveillance of the reactor building access doors provides additional assurance that reactor building integrity is maintained.

Maintaining closed doors on the pump compartments ensures that suction to the core and containment spray pumps is not lost in case of a gross leak from the suppression chamber.

*FSAR

INSERT F (for TS page 172; Bases for TS Sections 3.4.3 and 4.4.3)

The secondary containment is designed to minimize any ground level release of radioactive materials that might result from a serious accident. The reactor building provides secondary containment during reactor operation, when the drywell is sealed and in service. The reactor building provides primary containment during periods when the reactor is shutdown, the drywell is open, and activities are ongoing that require secondary containment to be in effect.

There are two principal accidents for which credit is taken for reactor building (secondary containment) integrity. These are a loss of coolant accident (LOCA) and a refueling accident involving "recently irradiated" fuel. The reactor building performs no active function in response to each of these limiting events; however, its leak tightness is required to ensure that the release of radioactive materials is restricted to those leakage paths and associated leakage rates assumed in the accident analysis and that fission products entrapped within the reactor building structure will be treated by the Reactor Building Emergency Ventilation System (RBEVS) prior to discharge to the environment.

In addition to these limiting events, events occurring during handling of an irradiated fuel cask and operations with a potential for draining the reactor vessel (OPDRVs) can be postulated to cause a fission product release. During these events, the reactor building would be the only barrier to a release to the environment. Thus, reactor building integrity is required during handling of an irradiated fuel cask and during OPDRVs.

The Refueling Accident analysis is based on an alternate source term (AST) methodology (10 CFR 50.67 and Regulatory Guide 1.183). This analysis concluded that the calculated total effective dose equivalent (TEDE) values to the control room occupants, the exclusion area boundary, and the low population zone are well below the TEDE criteria established in 10 CFR 50.67 without crediting reactor building integrity, operation of the RBEVS, or operation of the Control Room Air Treatment System (CRATS), as long as the fuel is allowed to decay for at least 24 hours following reactor shutdown. As a result, "recently irradiated" fuel is defined as fuel that has occupied part of a critical reactor core within 24 hours; i.e., reactor fuel that has decayed less than 24 hours following reactor shutdown. Therefore, reactor building integrity is not required during movement of decayed irradiated fuel that is no longer considered "recently irradiated." Conversely, reactor building integrity is required during movement of recently irradiated fuel assemblies.

BASES FOR 3.4.4 AND 4.4.4 EMERGENCY VENTILATION SYSTEM

The emergency ventilation system is designed to filter and exhaust the reactor building atmosphere to the stack during secondary containment isolation conditions. Both emergency ventilation system fans are designed to automatically start upon high radiation in the reactor building ventilation duct or at the refueling platform and to maintain the reactor building pressure to the design negative pressure so as to minimize in-leakage. Should one system fail to start, the redundant system is designed to start automatically. Each of the two fans has 100 percent capacity.

High efficiency particulate absolute (HEPA) filters are installed before and after the charcoal adsorbers to minimize potential release of particulates to the environment and to prevent clogging of the iodine adsorbers. The charcoal adsorbers are installed to reduce the potential release of radioiodine to the environment. The in-place test results should indicate a system leak tightness of less than 1 percent bypass leakage for the charcoal adsorbers and a HEPA efficiency of at least 99 percent removal of DOP particulates. The laboratory carbon sample test results should indicate a radioactive methyl iodide removal efficiency of at least 95 percent, which is derived from applying a safety factor of 2 to the charcoal filter efficiency of 90 percent assumed in analyses of design basis accidents. If the efficiencies of the HEPA filters and charcoal adsorbers are as specified, the resulting doses will be less than the ~~10CFR100 and General Design Criterion 19~~ ~~guidelines~~ 10CFR 50.67 acceptance criteria for the accidents analyzed. Operation of the fans significantly different from the design flow will change the removal efficiency of the HEPA filters and charcoal adsorbers.

Only one of the two emergency ventilation systems is needed to cleanup the reactor building atmosphere upon containment isolation. If one system is found to be inoperable, there is no immediate threat to the containment system performance and reactor operation or refueling ~~operation~~ activities may continue while repairs are being made. If neither circuit is operable, the plant is brought to a condition where the emergency ventilation system is not required.

Pressure drop across the combined HEPA filters and charcoal adsorbers of less than 6 inches of water at the system design flow rate will indicate that the filters and adsorbers are not clogged by excessive amounts of foreign matter. Heater capability and pressure drop should be determined at least once per operating cycle to show system performance capability.

The frequency of tests and sample analysis are necessary to show that the HEPA filters and charcoal adsorbers can perform as evaluated. The charcoal adsorber efficiency test should allow for charcoal sampling to be conducted using an ASTM D3803-1989 approved method. If test results are unacceptable, all adsorbent in the system shall be replaced with an adsorbent meeting the physical property specifications of Table 5-1 of ANSI 509-1980.

Insert G

INSERT G (for TS page 176; Bases for TS Sections 3.4.4 and 4.4.4)

The two principal accidents for which the Reactor Building Emergency Ventilation System (RBEVS) must be operable are a loss of coolant accident (LOCA) and a refueling accident involving "recently irradiated" fuel. In addition to these limiting events, events occurring during handling of an irradiated fuel cask and operations with a potential for draining the reactor vessel (OPDRVs) can be postulated to cause a fission product release. During these events, the reactor building would be the only barrier to a release to the environment. Thus, the RBEVS is required to be operable during handling of an irradiated fuel cask and during OPDRVs.

The Refueling Accident analysis is based on an alternate source term (AST) methodology (10 CFR 50.67 and Regulatory Guide 1.183). This analysis concluded that the calculated total effective dose equivalent (TEDE) values to the control room occupants, the exclusion area boundary, and the low population zone are well below the TEDE criteria established in 10 CFR 50.67 without crediting reactor building integrity or operation of the RBEVS, as long as the fuel is allowed to decay for at least 24 hours following reactor shutdown. As a result, "recently irradiated" fuel is defined as fuel that has occupied part of a critical reactor core within 24 hours; i.e., reactor fuel that has decayed less than 24 hours following reactor shutdown. Therefore, reactor building integrity is not required and the RBEVS is not required to be operable during movement of decayed irradiated fuel that is no longer considered "recently irradiated." Conversely, reactor building integrity is required and the RBEVS is required to be operable during movement of recently irradiated fuel assemblies.

The control room air treatment system is designed to filter the control room atmosphere for intake air. A roughing filter is used for recirculation flow during normal control room air treatment operation. The control room air treatment system is designed to maintain the control room pressure to the design positive pressure (one-sixteenth inch water) so that all leakage should be out leakage. The control room air treatment system starts automatically upon receipt of a LOCA (high drywell pressure or low-low reactor water level) or Main Steam Line Break (MSLB) (high steam flow main-steam line or high temperature main-steam line tunnel) signal. The system can also be manually initiated.

High efficiency particulate absolute (HEPA) filters are installed before the charcoal adsorbers to prevent clogging of the iodine adsorber. The charcoal adsorbers are installed to reduce the potential intake of radioiodine to the control room. The in-place test results should indicate a system leak tightness of less than 1 percent bypass leakage for the charcoal adsorbers and a HEPA efficiency of at least 99 percent removal of DOP particulates. The laboratory carbon sample test results should indicate a radioactive methyl iodide removal efficiency of at least 95 percent, which is derived from applying a safety factor of 2 to the charcoal filter efficiency of 90 percent assumed in analyses of design basis accidents. If the efficiencies of the HEPA filter and charcoal adsorbers are as specified, adequate radiation protection will be provided such that resulting doses will be less than the allowable levels stated in ~~Criterion~~ 10CFR 50.67 ~~19 of the General Design Criteria for Nuclear Power Plants, Appendix A to 10CFR Part 50~~. Operation of the fans significantly different from the design flow will change the removal efficiency of the HEPA filters and charcoal adsorbers.

If the system is found to be inoperable, there is no immediate threat to the control room and reactor operation or refueling ~~operation~~ activities may continue for a limited period of time while repairs are being made. If the makeup system cannot be repaired within seven days, the reactor is shutdown and brought to cold shutdown within 36 hours; or ~~refueling operations~~ are terminated.

Pressure drop across the combined HEPA filters and charcoal adsorbers of less than 1.5 inches of water at the system design flow rate will indicate that the filters and adsorbers are not clogged by excessive amounts of foreign matter. Pressure drop should be determined at least once per operating cycle to show system performance capability.

The frequency of tests and sample analysis are necessary to show the HEPA filters and charcoal adsorbers can perform as evaluated. The charcoal adsorber efficiency test should allow for charcoal sampling to be conducted using an ASTM D3803-1989 approved method. If test results are unacceptable, all adsorbent in the system shall be replaced with an adsorbent meeting the physical property specifications of Table 5-1 of ANSI 509-1980. The replacement charcoal for the adsorber tray removed for the test should meet the same adsorbent quality. Any HEPA filters found defective shall be replaced with filters qualified pursuant to ANSI 509-1980.

Insert H

activities involving handling of recently irradiated fuel or an irradiated fuel cask in the reactor building, or operations with a potential for draining the reactor vessel (OPDRVs)

INSERT H (for TS page 180; Bases for TS Sections 3.4.5 and 4.4.5)

The two principal accidents for which the Control Room Air Treatment System (CRATS) must be operable are a loss of coolant accident (LOCA) and a refueling accident involving "recently irradiated" fuel. In addition to these limiting events, events occurring during handling of an irradiated fuel cask and operations with a potential for draining the reactor vessel (OPDRVs) can be postulated to cause a fission product release. Thus, the CRATS is required to be operable during handling of an irradiated fuel cask and during OPDRVs.

The Refueling Accident analysis is based on an alternate source term (AST) methodology (10 CFR 50.67 and Regulatory Guide 1.183). This analysis concluded that the calculated total effective dose equivalent (TEDE) values to the control room occupants, the exclusion area boundary, and the low population zone are well below the TEDE criteria established in 10 CFR 50.67 without crediting operation of the CRATS, as long as the fuel is allowed to decay for at least 24 hours following reactor shutdown. As a result, "recently irradiated" fuel is defined as fuel that has occupied part of a critical reactor core within 24 hours; i.e., reactor fuel that has decayed less than 24 hours following reactor shutdown. Therefore, the CRATS is not required to be operable during movement of decayed irradiated fuel that is no longer considered "recently irradiated." Conversely, the CRATS is required to be operable during movement of recently irradiated fuel assemblies.

total effective dose equivalent

BASES FOR 3.6.15 AND 4.6.15 MAIN CONDENSER OFFGAS

Restricting the gross radioactivity rate of noble gases from the main condenser provides assurance that the ~~total body exposure~~ to an individual at the exclusion area boundary will not exceed a very small fraction of the limits of ~~10CFR Part 100~~ in the event this effluent is inadvertently discharged directly to the environment without treatment. This specification implements the requirements of General Design Criteria 60 and 64 of Appendix A to 10CFR Part 50. The primary purpose of providing this specification is to limit buildup of fission product activity within the station systems which would result if high fuel leakage were to be permitted over extended periods.

10 CFR 50.67

ATTACHMENT (4)

DETERMINATION OF REACTOR BUILDING POSITIVE PRESSURE PERIOD

Nine Mile Point Nuclear Station, LLC
December 14, 2006

A4-1. INTRODUCTION

The alternative source term loss of coolant accident (LOCA) analysis considers the reactor building positive pressure period. This is defined as the period when a loss of offsite power causes a loss of reactor building negative pressure relative to the external atmospheric static pressure. The start of the emergency diesel generators followed by the start of the reactor building emergency ventilation system (RBEVS) returns the reactor building to a negative pressure. The time of positive pressure relative to the atmospheric static pressure is called the drawdown time. The post-LOCA primary containment leakage into the reactor building is assumed to be released directly to the environment during the drawdown period.

A4-2. ANALYSIS

A plant-specific calculation was performed to determine the reactor building drawdown time. This is a new licensing basis analysis for Nine Mile Point Unit 1 (NMP1). The drawdown calculations were performed using the GOTHIC 7.2a(QA) containment analysis software. The calculations utilize the GOTHIC subdivided volume capability to represent each building elevation and to model buoyancy effects, natural circulation flow paths, and building heat sinks. The model was benchmarked to data collected during the performance of NMP1 Technical Specification (TS) surveillance requirement 4.4.1. This surveillance demonstrates the capability of each RBEVS train to maintain a negative pressure of at least 0.25 inches water gauge (WG) less than atmospheric pressure with a wind speed of zero and a maximum reactor building inleakage of 1600 cfm. While the TS surveillance is not run as a drawdown test, the GOTHIC model response without LOCA heat loads agrees with the reactor building surveillance test response of approximately 2 to 4 minutes. The NMP1 drawdown modeling approach was also benchmarked to the Nine Mile Point Unit 2 (NMP2) drawdown analysis documented in the NMP2 Updated Safety Analysis Report. Based on these benchmarks and the conservative assumptions utilized in the analysis, the calculated post-LOCA drawdown time is considered to be conservative.

The following conservative conditions were included in the analysis:

1. Loss of offsite power and failure of one of the two 100% capacity RBEVS trains to operate (i.e., only a single RBEVS train operates).

2. Maximum reactor building inleakage allowed by TS Section 3.4.1.

3. Design basis post-LOCA reactor building heat loads, including maximum post-LOCA suppression pool heatup, operation of two core spray pump sets and one containment spray pump set, heat loads from the emergency condensers on the refuel floor elevation and from the spent fuel pool (assumed to be at a constant 90°F based on manual restart of a spent fuel pool cooling pump), electrical heat loads from equipment required to operate to mitigate the LOCA, and solar heat loads.

4. Winter atmospheric conditions based on onsite meteorological data collected for the five-year period of 1997 through 2001 (consistent with the guidance provided in Regulatory Guide 1.183, Appendix A, Section 4.3). The use of summer conditions results in a drawdown time that is approximately one-half that of the winter case and thus is less limiting.

A4-3. RESULTS

The results of the analysis (illustrated on Figures A4-1 and A4-2) show an initial rapid rise in reactor building pressure. The reactor building pressure in the area above the refuel floor elevation (el. 340 ft) remains positive for approximately 26 minutes, decreases to -0.15 inches WG at approximately 67 minutes, and reaches -0.25 inches WG at approximately 5 hours. At elevations below the refuel floor, the positive pressure times and the times to achieve -0.25 inches WG are considerably shorter. For example, at the 318 ft elevation (upper), the reactor building pressure remains positive for approximately 18 minutes and decreases to -0.25 inches WG at approximately 52 minutes.

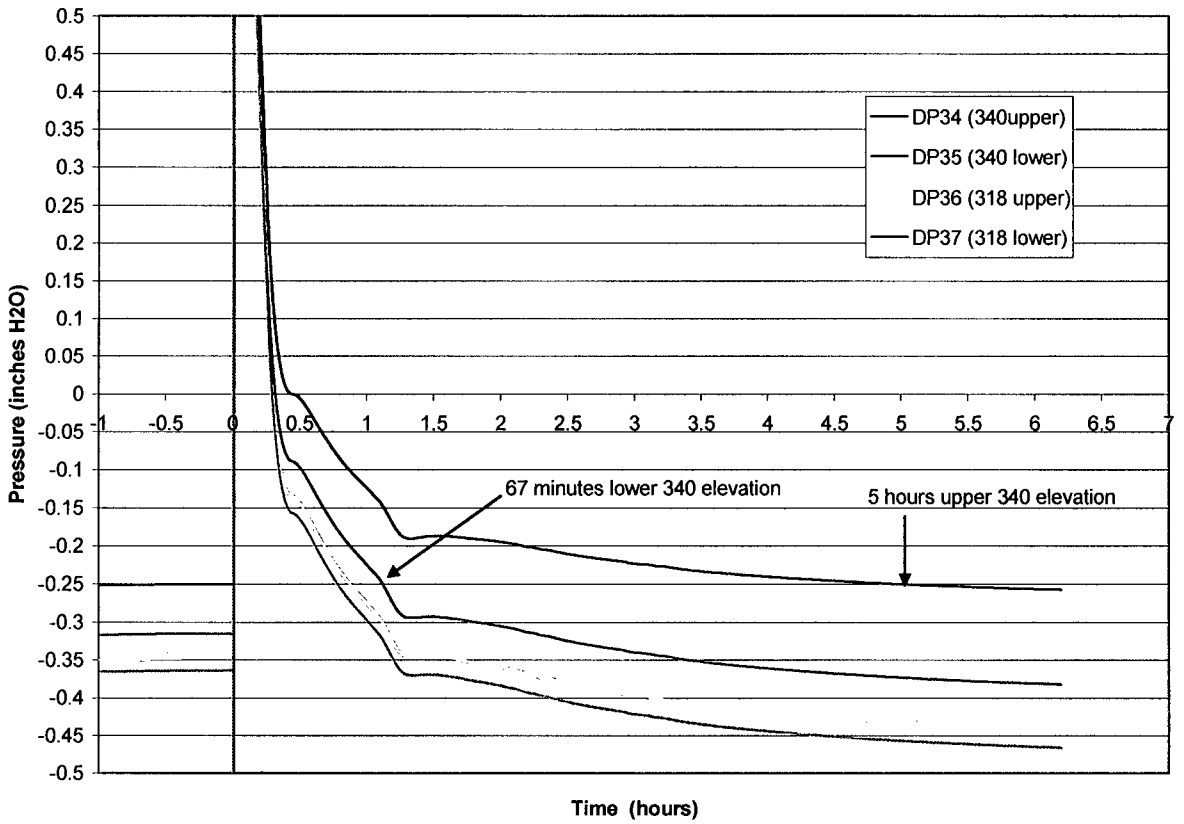

Figure A4-1 Reactor Building Pressure vs. Time by Reactor Building Elevation

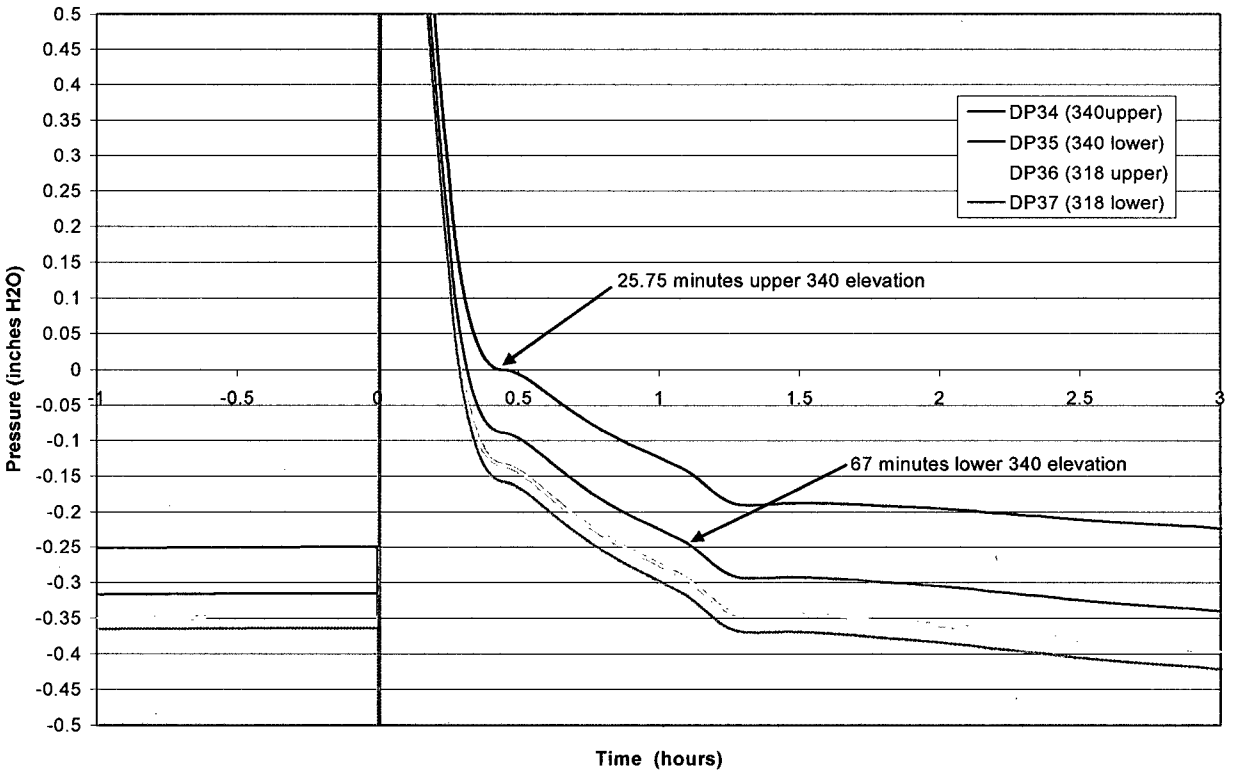

Figure A4-2 Reactor Building Pressure vs. Time by Reactor Building Elevation (Focused on the Initial 2.5 hours to Illustrate the Time that Pressure Becomes Negative)

ATTACHMENT (5)

SUPPRESSION POOL pH CONTROL IN THE EVENT OF A DESIGN BASIS LOCA

Nine Mile Point Nuclear Station, LLC
December 14, 2006

A5-1. INTRODUCTION

The AST loss of coolant accident (LOCA) analysis takes credit for minimization of re-evolution of elemental iodine from the suppression pool. Re-evolution is strongly dependent on suppression pool pH. The analysis credits the pH buffering effect of sodium pentaborate solution introduced into the suppression pool post-LOCA by operation of the Liquid Poison System (LPS) to maintain the pH above 7.0. This pH satisfies the conditions for inhibiting the release of the chemical form of elemental iodine from the suppression pool water.

The purpose of this attachment is to (1) provide the details of the AST analysis for suppression pool pH control; (2) evaluate suitability of the LPS to perform the post-LOCA suppression pool pH control function; and (3) address procedural guidance for post-LOCA injection of the sodium pentaborate solution using the LPS.

A5-2. SUPPRESSION POOL POST-LOCA pH ANALYSIS

A5-2.1 Analysis Summary

Analyses have been performed to demonstrate that the pH of the suppression pool remains continuously above 7.0 following a LOCA for the 30-day duration of the accident. The impacts of severe accident management response actions are not considered in the analyses. A complete description of the analysis methods, assumptions, inputs, and results is provided in calculation H21C084. A copy of this calculation is enclosed (see Attachment 8).

Calculation H21C084 determines the suppression pool pH values as a function of time without addition of the sodium pentaborate solution in the LPS. The effect on the final pH of adding sodium pentaborate to the suppression pool water via the LPS is subsequently determined to verify that the suppression pool water pH can be maintained above 7.0 based on current Technical Specification requirements for the LPS.

The suppression pool water pH is calculated using the methodology described in NUREG/CR-5950 (Reference A5-5.3) and as developed for the equivalent calculation done for Grand Gulf Nuclear Station (GGNS). The accuracy of translation of the equations in these documents into spreadsheet cell formulas for the Nine Mile Point Unit 1 calculation was verified by performing benchmarking calculations using the GGNS design input data. The benchmarking results, described in Section 5.8 of calculation H21C084, demonstrate that the GGNS and NMP1 analyses yield very similar results.

The design inputs for the NMP1 calculations were conservatively established to maximize the post-LOCA production of acids and to minimize the post-LOCA production and/or addition of bases. Other design input values were selected to minimize the calculated pH, and initial suppression pool water volume cases based on both the maximum and minimum normal operating level were considered. Significant inputs to the suppression pool pH analysis are provided in Table A5-1.

Calculation H21C084 assumes that a total of 1,325 gallons of sodium pentaborate solution are added via the LPS at a rate of 30 gpm to buffer the suppression pool pH, based on the minimum requirements of TS Section 3.1.2. LPS flow mixing and transport of the sodium pentaborate solution to the suppression pool have been evaluated to determine the time at which manual initiation of the LPS must occur to assure that the suppression pool pH remains above 7.0 throughout the duration of the accident.

A5-2.2 Results and Conclusions of Initial Analysis

The calculated post-accident suppression pool pH as a function of time after accident initiation is shown on Figure 4-1 of calculation H21C084 for the maximum suppression pool water volume case. Without addition of sodium pentaborate solution from the LPS, the pH in the suppression pool falls below 7.0 between approximately 9 and 10 hours. Therefore, injection of sodium pentaborate solution by the LPS is required to prevent iodine re-evolution.

Calculation H21C084 shows that addition of 1325 gallons of sodium pentaborate solution via the LPS buffers the suppression pool water and results in a final pH at 30 days of 7.9, thereby satisfying the conditions for inhibiting the release of iodine in the elemental form from the suppression pool water. As discussed in Section A5-2.5 below, injection, transport, and mixing of the sodium pentaborate solution will be completed by 9 hours after the start of the LOCA. Therefore, manual LPS initiation is acceptable. Manual initiation of the LPS is expected early in a design basis LOCA as a result of emergency operating procedures and severe accident guidelines, particularly for events resulting in fuel damage that would be consistent with AST source terms.

A5-2.3 Impact of Revised Post-LOCA Suppression Pool Water Temperature Analysis

Subsequent to completion of calculation H21C084, a new post-LOCA suppression pool temperature profile was calculated to account for an increase in the maximum allowable ultimate heat sink (Lake Ontario) water temperature, from 81°F to 83°F (License Amendment No. 190, Reference A5-5.1). The impact of the slightly higher suppression pool water temperature on the post-LOCA suppression pool pH calculations was evaluated using the same methods, inputs, and assumptions described in calculation H21C084. The evaluation shows that the results obtained in calculation H21C084 remain unchanged; i.e., (1) the pH in the suppression pool falls below 7.0 between approximately 9 and 10 hours, (2) addition of 1325 gallons of sodium pentaborate solution via the LPS buffers the suppression pool water and results in a final pH at 30 days of 7.9.

A5-2.4 Correction of the Sodium Pentaborate Solution Volume Injected by the LPS

The minimum LPS storage tank volume of 1325 gallons used in calculation H21C084 was taken from Technical Specification (TS) Section 3.1.2.c. However, calculation H21C084 failed to recognize that the volume of 1325 gallons includes 197 gallons of solution that remains in the tank after injection is completed. Additionally, approximately 14 gallons of solution will remain in the LPS suction and discharge lines after the injection stops. Therefore, the correct value for the sodium pentaborate solution volume available for pH control is 1114 gallons. To determine the impact of this difference, the new value of 1114 gallons was substituted into the original spreadsheet calculation developed in calculation H21C084. The 30-day final pH for the suppression pool decreased from 7.91 to 7.80. Thus, the conclusion that the suppression pool pH will remain above 7.0 for the 30-day accident duration remains unchanged.

A5-2.5 Analysis of Transport and Mixing of the Injected Sodium Pentaborate Solution

As described in NMP1 Updated Final Safety Analysis Report (UFSAR) Section VII-C.2.0, the liquid poison sparger in the reactor vessel is a 1-inch stainless steel pipe which is fastened to the inside of the vessel shroud below the core support plate. This 360-degree sparger has ten (10) ¼-inch drilled holes which are distributed equally around the sparger and which spray toward the bottom of the vessel.

Detailed discussion of mixing and transport of the sodium pentaborate solution to the suppression pool is provide in Attachment (6), replacing in its entirety the discussion that appears in Calculation H21C084 under Design Input 4.14. Schematic diagrams illustrating the flow paths within the reactor vessel and from the vessel to the suppression pool are provided in Attachment (6). As determined in Attachment (6), the maximum total time for the injection, transport, and mixing of 1,114 gallons of sodium pentaborate solution in the suppression pool is approximately 7.4 hours. Thus, in order to remain within the 9-hour time calculated for the pool pH to drop below 7.0 without buffering, the LPS must be initiated approximately 1.5 after the onset of the accident.

A sensitivity analysis was performed to determine the minimum quantity of sodium pentaborate solution required to achieve a pH of 7.0. The sodium pentaborate solution volume in the calculation spreadsheets used in Calculation H21C084 was adjusted to reach a final (30-day) pH value of 7.0. The minimum required sodium pentaborate solution volume was calculated to be 734 gallons. This value is 66% of the available volume of 1,114 gallons and provides sufficient margin to account for any potential sodium pentaborate hold-up or hideout not accounted for in the evaluation. The calculated total time for the injection, transport, and mixing of 734 gallons of sodium pentaborate solution in the suppression pool is approximately 5.7 hours.

Based on the above, adequate transport of the sodium pentaborate to the suppression pool as well as suppression pool recirculation mixing will occur prior to the time that credit is needed for the buffering effect of the sodium pentaborate for pH control.

A5-3. EVALUATION OF SUITABILITY OF THE LPS TO PERFORM THE POST-LOCA pH CONTROL FUNCTION

A5-3.1 LPS Design Description

The NMP1 LPS is described in Updated Safety Analysis Report (UFSAR) Section VII-C and is required to be operable in accordance with TS Section 3.1.2. The LPS consists of an ambient pressure tank with immersion heater for low-temperature sodium pentaborate solution storage, two high-pressure positive displacement pumps for injecting the sodium pentaborate solution into the reactor core, two explosive-actuated shear plug valves for isolating the liquid poison from the reactor until required, an in-vessel sparger ring, a test tank, two isolation check valves, additional valves, piping, and associated instrumentation. The LPS system is shown schematically on UFSAR Figure VII-6 (re-produced as Figure A5-1 to this attachment).

The two positive displacement pumps (one in standby) take suction from a common header on the storage tank and discharge through the two explosive-actuated valves connected in parallel to a common discharge header. The sodium pentaborate solution enters the reactor vessel through the bottom head and is dispersed in the core inlet plenum by the sparger. The pumps are each designed to deliver 30 gpm of sodium pentaborate solution to the reactor.

A5-3.2 LPS Design Criteria and Applicable Program Requirements

All of the LPS components required for the injection of sodium pentaborate solution into the reactor are classified safety related. Commensurate with the high degree of reliability required for safety related service, the LPS equipment and components are designed, tested and maintained in accordance with the governing design criteria and program requirements outlined below.

A5-3.2.1 Seismic Qualification

The safety related portions of the LPS System are designed for earthquake loads in accordance with the site-specific seismic design criteria used in the original licensing of NMP1. The LPS containment isolation check valves are designed for 0.3g horizontal and 0.15g vertical, and the remaining safety related portions of the LPS are designed for 0.3g horizontal and 0.1g vertical.

A5-3.2.2 AC Power

All electrical components required for the operation of the train associated with Liquid Poison Pump 11 are powered from Power Board (PB) 16B. If normal AC power is lost, this PB will receive power from Emergency Diesel Generator 102. All electrical components required for the operation of the train associated with Liquid Poison Pump 12 are powered from PB 17B. If normal AC power is lost, this PB will receive power from Emergency Diesel Generator 103. The common storage tank heater is powered from PB-167, which can receive power from either PB 16B or 17B.

A5-3.2.3 Inservice Inspection (ISI) and Inservice Testing (IST) Programs

The applicable components of the LPS are inspected and tested in accordance with the NMP1 American Society of Mechanical Engineers (ASME) ISI and IST programs as required by 10 CFR 50.55a.

A5-3.2.4 Maintenance Rule Program

The LPS is included in the scope of the NMP1 Maintenance Rule program consistent with 10 CFR 50.65.

A5-3.2.5 Environmental Qualification

The electrical components required to function to perform the LPS sodium pentaborate injection safety function are the LPS pumps, explosive valves, and the electrical power supplies and associated controls supporting them. The LPS pumps and valves are located in the reactor building. The pumps receive their power from Power Boards (PB) 16B and 17B, which are also located in the reactor building. The valves are powered from the Reactor Protection System (RPS) Uninterruptible Power Supplies (UPS) and associated RPS buses, which are located in the auxiliary control room.

PB-16B and PB-17B and their breakers (including the LPS pump breakers) are environmentally qualified for the post-LOCA environment. The remaining components (LPS pumps, explosive valves, RPS UPSs, and the associated RPS buses) were not previously environmentally qualified for the post-LOCA environment. An initial evaluation indicates that these components will be capable of performing their new post-LOCA function in the accident environment for the required 3-hour mission time. Environmental qualification for the LPS components located in a harsh environment will be established in accordance with the station design change process prior to completing implementation of the AST license amendment.

A5-3.3 <u>LPS Reliability</u>

The LPS has suitable redundancy in components and features to assure that for onsite or offsite power operation, its safety function of injecting sodium pentaborate solution into the reactor for the purpose of suppression pool pH control can be accomplished. The LPS is composed of two separate, 100% capacity trains that are each separately capable of performing the suppression pool pH control safety function. The common liquid poison storage tank, common pump suction piping from the storage tank, and the common

sodium pentaborate injection line are passive components that are not subject to active failures. In addition, all manual valves in the system flow path and branch connections are locked in their safety-function positions. However, there are several active components that are not redundant. This limited lack of redundancy is offset by evaluations demonstrating that either (1) the component has acceptable quality and reliability, or (2) compensatory actions can be taken in the event of failure of the component. These evaluations are provided below.

A5-3.3.1 Injection Line Check Valves

The common LPS injection line contains two check valves in series (CKV-42.1-02 and CKV-42.1-03). These are containment isolation valves, with one valve located inside primary containment and the other valve outside primary containment. A complete failure of either valve to open would prevent the LPS from performing its safety function. The check valves are nominal 2-inch and are manufactured by the Chapman Division of the Crane Co., model number 1523V-WE.

The existing valves were procured as part of the original system supply in accordance with the quality requirements applicable to safety-related equipment at the time of purchase. Replacement internals have been purchased safety-related under the existing Quality Assurance (QA) program requirements. The check valves are mechanical components with no non-metallic parts. As such, environmental qualification in accordance with 10 CFR 50.49 is not required. The valves are designed for earthquake loads as previously discussed in Section A5-3.2.1 above.

A search of the Equipment Performance Information and Exchange System (EPIX) and Nuclear Plant Reliability Data System (NPRDS) databases identified no failures of any common injection line check valves to open. The only identified failure to open of any BWR poison system check valve occurred on a pump discharge check valve (upstream of the explosive valve on the redundant pump trains). The valve manufacturer was not the same as for NMP1, and the valve failed partially open. One failure of a model 1523V check valve was also identified. The failure was in an 18-inch feedwater check valve. According to the report, system pressure across the valve was increased and the valve subsequently opened and operated normally.

Pump flow through the check valves is verified once each refueling outage at NMP1 using the system pumps, explosive valves, and demineralized water, as required by TS Section 4.1.2. The test is performed at relatively low system pressure drop. No failures of this surveillance test have been reported. For the LPS post-LOCA suppression pool pH control function, the maximum pressure drop could approach 1,500 psid due to the conditions in the vessel (i.e., faulted line followed by rapid depressurization of the reactor). The high differential pressure increases the likelihood that the check valves would open under LOCA conditions.

Based on the check valve design attributes, EPIX and NPRDS reviews, NMP1 performance history, and the high differential pressures expected under post-accident conditions, the injection line check valves are of acceptable quality and reliability.

A5-3.3.2 Train Selector Switch

A single three-position (System 12/OFF/System 11) selector switch, located in the control room, allows the operator to select either LPS train for injection. The selector switch is manufactured by the General Electric Co., Model No. SB10207A7161G1X3, Type SB10. If one train fails to function, the operator can immediately switch to the other train. Selection of either train fires both explosive valves. The switch is locked in the OFF position. No single failure of switch contacts can prevent the successful operation of

both trains. However, mechanical failures of the switch can be postulated which could prevent the initiation of both trains. These failures include, but may not be limited to, failure of the locking mechanism, severe binding of the main switch shaft or attached components, or failure (separation) of the shaft or its connection to the handle.

Considering the design of the switch and its limited service duty, failures of the kind described above are considered to be extremely unlikely. A search of the EPIX and NPRDS databases identified no previously documented failures of this type of switch. No failures of this switch at NMP1 have been identified.

The selector switch was procured as part of the original system supply in accordance with the quality requirements applicable to safety related equipment at the time of purchase. The seismic qualification basis for the LPS equipment is addressed in Section A5-3.2.1 above. Environmental conditions are mild, since the switch is in the main control room. Therefore, no additional environmental qualification is required.

The selector switch is verified to operate every refueling outage during the performance of surveillance testing performed in accordance with TS Section 4.1.2 and the IST program.

Based on the review of industry experience and the operating experience at NMP1, the selector switch is highly reliable. Failure of the switch to function could be readily addressed since the switch is located in the control room and LPS injection is not required until approximately 1.5 hours after the LOCA.

A5-4. PROCEDURAL GUIDANCE FOR POST-LOCA INJECTION OF THE SODIUM PENTABORATE SOLUTION USING THE LPS

The LPS will be credited for limiting radiological dose following a LOCA involving fuel damage in accordance with the AST analyses for suppression pool pH control. The AST analysis provides for LPS actuation at approximately 1.5 hours following accident initiation and completion of injection of an adequate volume and content of sodium pentaborate solution within several hours, which will ensure the suppression pool pH remains at or above 7.0 for 30 days.

Initiation of the LPS is accomplished from the main control room with a simple keylock switch manipulation. Actuation of this switch is the only action necessary to initiate injection of the sodium pentaborate solution into the reactor vessel. The new LPS function to control suppression pool pH does not involve any change to the actions needed to be performed to initiate LPS injection. Operators are familiar with operation of the LPS due to previous training for Anticipated Transients Without Scram (ATWS) events and loss of emergency core cooling capability. Indication of proper LPS operation is provided in the control room as described in UFSAR Section VII-C.2.1.

Plant emergency operating procedures (EOPs) presently provide instructions to initiate the LPS as well as other sources of water for emergency core cooling. Specifically, procedure N1-EOP-2, "RPV Control," is entered with reactor pressure vessel (RPV) water level below the scram setpoint, RPV pressure above the high pressure scram setpoint, or drywell pressure above the scram setpoint. These EOP entry conditions are indicative of a plant condition that could degrade to imminent or actual core damage. The RPV low level and drywell high pressure entry conditions ensure that N1-EOP-2 is entered for a LOCA. When conditions defined in the EOPs indicate that adequate core cooling cannot be restored and maintained, for any reason, then entry into the Severe Accident Procedures (SAPs) is directed. Specifically, procedure N1-SAP-2, "RPV, Containment, and Radioactivity Release Control," requires LPS injection to prevent core re-criticality, regardless of whether or not an ATWS condition exists. Prior to completing

implementation of the AST license amendment, the EOPs and SAPs will be revised, as appropriate, to reflect the post-LOCA function of the LPS and to assure that, once initiated, the entire contents of the LPS storage tank are injected to accomplish the pH control function.

The reactor water level, reactor pressure, and drywell pressure instruments used to measure conditions for EOP and SAP entry meet the quality requirements for a Type B variable as defined in Regulatory Guide 1.97 (Reference A5-5.2), as discussed in NMP1 UFSAR Section VIII-C.5.0. This instrumentation is required to be operable by TS Section 3.6.2, "Protective Instrumentation," and TS Section 3.6.11, "Accident Monitoring Instrumentation" (reactor water level and drywell pressure only).

Procedure N1-EOP-3, "Failure to Scram," currently calls for termination of LPS as a reactivity control measure if an ATWS was in progress and it was subsequently determined that the reactor would remain shutdown without LPS injection. Since the AST LOCA scenario does not assume that an ATWS event has occurred, this EOP does not require revision.

Licensed operators and shift technical advisors (STAs) have received initial training on the EOPs and SAPs, and will continue to receive periodic refresher training. Additionally, prior to completing implementation of the AST license amendment, training will be provided to licensed operators and STAs for the procedure revisions that specifically address sodium pentaborate solution injection for pH control following a LOCA.

The procedures that will implement LPS injection of the sodium pentaborate solution for post-LOCA suppression pool pH control are controlled procedures that are prepared, reviewed, and approved in accordance with the Quality Assurance program.

A5-5. REFERENCES

1. Letter from T. G. Colburn (NRC) to J. A. Spina (NMPNS) dated August 12, 2005, Nine Mile Point Nuclear Station, Unit No. 1 – Issuance of Amendment Re: Emergency Technical Specification Change Request – Lake Water Maximum Temperature Limit (TAC No. MC8061)

2. Regulatory Guide 1.97, "Instrumentation for Light-Water-Cooled Nuclear Power Plants to Assess Plant and Environs Conditions During and Following an Accident," Revision 2, December 1980

3. NUREG/CR-5950, "Iodine Evolution and pH Control," December 1992

Table A5-1
Suppression Pool pH Control Inputs

Input/Assumption	Value
Suppression Pool Liquid Volume (Maximum/Minimum)	86,000 ft^3 / 79,800 ft^3
Reactor Coolant System Inventory Excluding Suppression Pool	501,500 lbm
Volume of 9.423% Sodium Pentaborate ($Na_2O*5B_2O_3*10H_2O$) Solution	1325 gallons*
Initial Suppression Pool pH	5.5
Mass of PVC Jacketed Cable in the Drywell	1400 lbm
Average Cable Outside Diameter	0.22 inches
Average Cable Jacket Thickness	0.030 inch

* This value was corrected to 1114 gallons in a subsequent evaluation. See Section A5-2.4.

ATTACHMENT (5)

SUPPRESSION POOL pH CONTROL IN THE EVENT OF A DESIGN BASIS LOCA

Figure A5-1

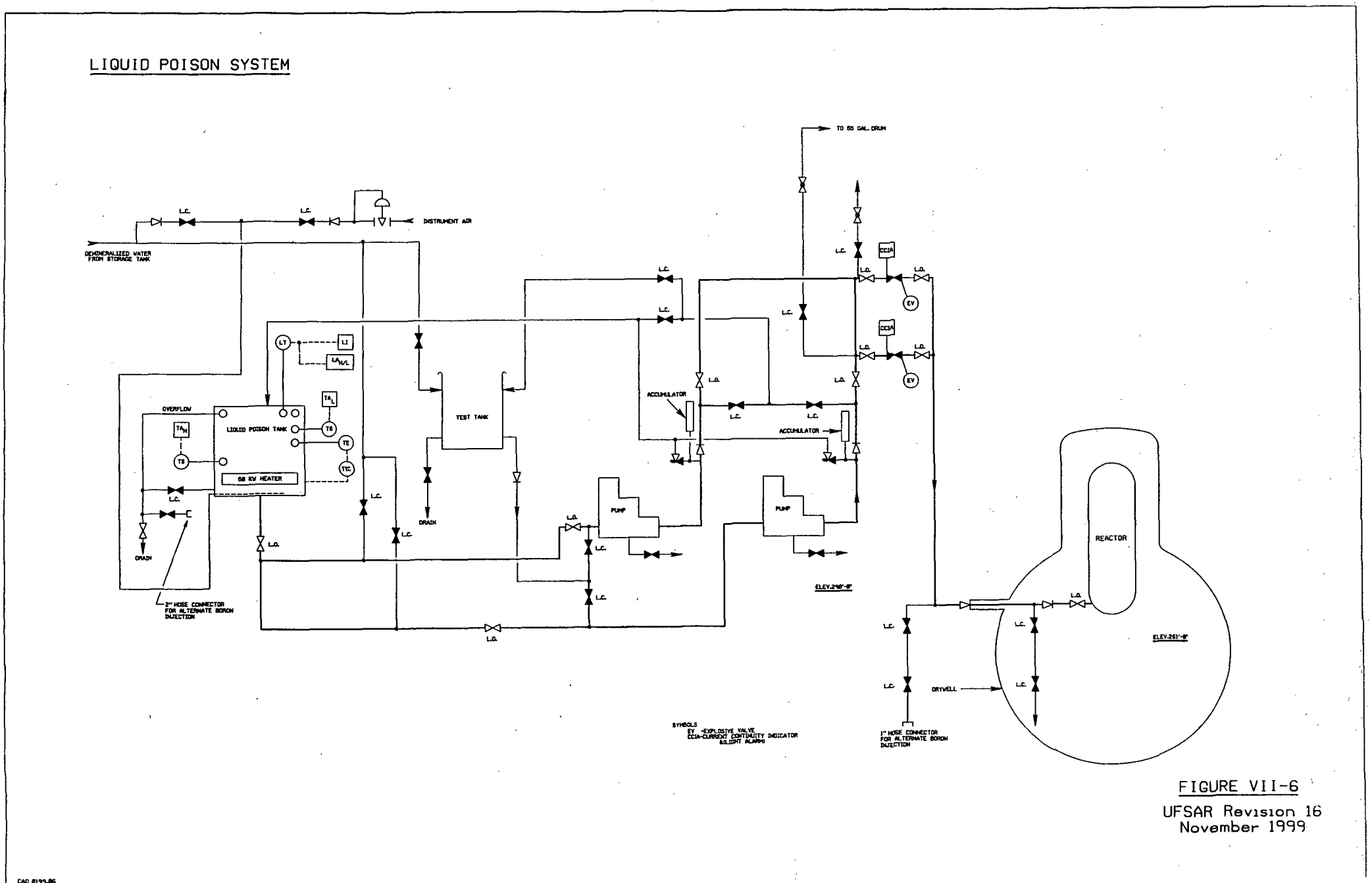

ATTACHMENT (6)

EVALUATION OF LPS INJECTION FLOW TRANSPORT AND MIXING

Nine Mile Point Nuclear Station, LLC
December 14, 2006

A6-1. INTRODUCTION

This attachment provides an evaluation of the transport and mixing of the sodium pentaborate solution through the reactor and containment systems to demonstrate that the amount and timing of the sodium pentaborate solution injected by the Liquid Poison System (LPS) supports the conclusion of the suppression pool post-LOCA pH evaluation (i.e., that the suppression pool pH is maintained greater than or equal to 7.0 for the 30-day duration of the design basis LOCA).

A6-2. SUPPRESSION POOL MIXING

Calculation H21C084, Design Input 4.14, states the following:

> *"The limiting Design Basis Accident (DBA) LOCA is identified in UFSAR Section VI-B.1.2 (Ref. 7.11.2) as an instantaneous double ended rupture (DER) of the RCS recirculation line (largest line in containment). For this case, a diesel generator failure is the limiting single failure as it results in only one core spray pump and one core spray topping pump being available per UFSAR Table XV-11 (Ref. 7.11.4). Given that the reactor vessel depressurizes reasonably quickly for a large break LOCA, the minimum flow rate from one core spray pump and one topping pump is expected to be between 2,000 to 3,000 gpm per UFSAR Table XV-9a (Ref. 7.11.3). In addition, at least one containment spray pump will be operable with a minimum flow rate of 3,600 gpm per UFSAR Table XV-32a (Ref. 7.11.1; also see p. VII-14a of UFSAR). Thus, a minimum flow rate of 5,600 gpm is expected when core spray is actuated. This flow rate equates to approximately 0.5 complete exchanges of the water in the torus per hour (1 complete exchange in approximately 2 hours). If core spray is not actuated, the minimum expected flow rate is 3,600 gpm which equates to approximately 0.3 complete exchanges of water in the torus per hour (1 complete exchange in approximately 3 hours). These mixing times are based on the maximum suppression chamber water volume."*

This design input identifies the core spray flow as between 2,000 and 3,000 gpm. For this evaluation, only the flow available after thirty minutes following the event is of concern. The Updated Final Safety Analysis Report (UFSAR), Figures XV-56E and XV-56F, indicate that the drywell and suppression pool pressures are less than 3 psig. Since the core spray topping pumps are not required at reduced pressures, the flow for one core spray pump will be used. Core spray system flows are provided in UFSAR Table XV-9a. Footnote 1 to the table indicates that the flows are based on the differential pressure between the reactor and the containment. Figure A-1.2 of NEDC-31446P – Supplement 4 (Reference A6-5.1) indicates that reactor pressure drops to a value of less than 20 psia in less than 80 seconds. Therefore, the reactor pressure will be approximately the same as the containment pressure. For a 0-psig differential pressure, UFSAR Table XV-9a indicates that the core spray flow will be 3,718 gpm. For this calculation a conservative value of 3,600 gpm will be used. Therefore, with one core spray pump and one containment spray pump operating, the flow will be 7,200 gpm. Using this value instead of the 5,600 gpm used in Calculation H21C084 results in approximately 0.6 complete exchanges of the water in the suppression pool per hour.

Additionally, Calculation H21C084 estimates the rate of suppression pool water exchange if core spray is not actuated. This is not realistic, since without core spray there is no core cooling available and significant core damage will result. It is realistic to assume, however, that at some time containment spray will be terminated. This could occur prior to LPS initiation or completion of solution transport. Therefore, the minimum flow available for mixing and transport of the LPS solution would be that of one core spray pump, or 3,600 gpm. This is the same value cited above for the containment spray pump flow

and results in approximately 0.3 complete exchanges of the water in the suppression pool per hour, which is judged to provide adequate mixing of the suppression pool.

A6-3. FLOW PATH EVALUATION

A6-3.1 Flow Inside the Reactor Vessel

Figure A6-1 is a simplified diagram of the flow path for the core spray and liquid poison systems inside the reactor vessel. Core spray flow enters the reactor vessel through spray headers located just above the reactor core. The water flows along/through the fuel rods, channels, fuel support pieces, core bypass regions, and the control rod and nuclear instrument guide tubes to the lower head region of the vessel. Figure A-1.1 of NEDC-31446P – Supplement 4 indicates that a steady state level of approximately 6.5 feet above the vessel bottom is attained. This level corresponds to a point approximately 3 inches below the centerline of the recirculation inlet nozzle and approximately 8 feet below the bottom of the lower shroud plate. The bottom of the shroud flow baffle is below this water level. The volume of water retained in the bottom head region is approximately 9,000 gallons. These values are based on a break at or below the recirculation inlet nozzles. A recirculation line break could occur in the small amount of recirculation outlet piping that exists up to approximately 7.25 feet above the inlet nozzles. At 13.75 feet above the vessel bottom, approximately 18,250 gallons will be retained in the vessel.

LPS flow enters the vessel through a circular sparger attached to the inside of the shroud below the lower shroud plate and contains ten ¼-inch holes directed downward. Directly below the sparger are the shroud support and the shroud flow baffle. Flow from the sparger is expected to land on the shroud support/flow baffle and flow downward from there at approximately 3 gpm (each) in ten locations around the inside circumference of the baffle. This flow joins the core spray flow where the pool surface meets the baffle. Considering the vertical distance for the core spray water to flow/fall, the pool surface is judged to be sufficiently turbulent to cause complete mixing of the LPS flow. Additionally, flow from the pool will be generally horizontal, passing through or under the baffle and between and around the 129 control rod guide tubes, providing additional sources of turbulent mixing. For breaks above the recirculation inlet nozzles, the level of the pool will be higher, reaching a maximum level just below the LPS sparger. Although the pool surface may be less turbulent at this level, the LPS flow will be entrained with the core spray flow, ensuring adequate mixing.

The only potential holdup volumes in the vessel are the four unbroken recirculation loops. For breaks below the recirculation outlet nozzles, these volumes are filled with water before LPS injection begins and they are not associated with the active flow path, such that diversion/entrapment of significant amounts of sodium pentaborate during the 38-minute injection period (see Section A6-3.4 below) is not expected. For breaks at the recirculation outlet nozzle elevation, the unbroken loops will become active volumes, experiencing reverse flow back into the vessel and out the broken loop. The volume of water contained in the recirculation loops is 1,879.7 cu. ft., or 14,062 gallons.

A6-3.2 Flow Inside the Drywell

The LPS/core spray combined flows will flow out the inlet/outlet nozzle of the broken recirculation loop and spill to the drywell floor (Figure A6-2). At the time of LPS injection, a pool of water will already exist on the floor up to the bottom of the ten large drywell vent pipes leading to the suppression pool. Based on the height of the bottom of the vent pipes above the floor (3.5 ft.) and the diameter of the floor (60 ft.), the volume of the pool on the floor is calculated to be 9,896 cu. ft. This value is conservative since it ignores the volume occupied by the reactor pedestal concrete support structure (approximately

1000 cu. ft.) and other structural/mechanical components at this elevation. The flow will proceed around and through the pedestal support structure to all ten of the vent pipes. The only holdup volumes in the drywell are the drywell floor and equipment drain sumps. These sumps are covered with steel plate, preventing free communication with the flow through the pool on the drywell floor. Since these volumes are filled with water before LPS injection begins and they are not associated with the active flow path, diversion/entrapment of significant amounts of sodium pentaborate during the injection and transport period is not expected.

A6-3.3 Flow Into the Suppression Pool

Flow from the large drywell vents proceeds to ten spherical junctions, which connect to the "centipede" ring header supplying the 120 drywell vent downcomers. The header is a smaller diameter than the spherical junctions and attaches to the junctions at the horizontal centerline. This allows for water to accumulate at the bottom of the junctions. Likewise, the downcomers are smaller than the header and connect to the header such that the bottoms of the downcomer penetrations are above the bottom of the header. This allows for a small amount of water to accumulate at the bottom of the header. The radius of the spherical junctions is 5.5 feet, the vent header radius is 2.4 feet, and the bottom of the vent header is 3.1 feet above the bottom of the spherical junctions. The bottom of the downcomers is calculated to be 0.14 feet above the bottom of the header and the effective length of the header is 282 feet. The volume of trapped water in the vent system can be calculated using standard geometric equations.

The formula for the volume of a segment of a sphere is:

$$V = \pi \cdot h^2 (r - h/3)$$

Where, h = height of the spherical segment
r = radius of the sphere
V = volume of the sphere

For the ten spherical junctions, the water volume contained in the segments of the spheres is:

$$V_{SJ} = 10 \cdot \pi \cdot h^2 (r - h/3) \cdot 7.481$$

Where, h = total height of water above the bottom of the spherical junctions (ft)
r = radius of the spherical junctions (ft)
V_{SJ} = total volume of water in the bottom of the spherical junctions (gallons)
7.481 = conversion factor from cu. ft. to gallons

The value for "h" is the sum of the height of the header above the bottom of the spherical junction and the height of the downcomers above the bottom of the headers, or 3.24 ft. Substituting, we have

$$V_{SJ} = 10 \cdot 3.1416 \cdot (3.24)^2 (5.5 - 3.24/3) \cdot 7.481$$

$$= 10{,}904 \text{ gallons}$$

For the header sections, the water volume is calculated from the area of a segment of a circle (header inside diameter) times the total length of the headers. The formula for the area of a segment of a circle is:

$A = ½ [r \cdot l - c(r - h)]$, where
$l = 0.01745 \cdot r \cdot \alpha$,

$\alpha = 2 \cdot \arccos [(r - h)/r]$, and

$c = 2\sqrt{h(2r-h)}$

where A = area of the segment
r = radius of the circle
l = length of the arc defined by the segment
α = angle defined by the segment, in degrees
c = length of the chord of the segment
h = height of the segment

Combining, we have

$$A = \tfrac{1}{2} [r \cdot 0.01745 \cdot r \cdot 2 \cdot \arccos [(r - h)/r] - 2\sqrt{h(2r-h)} \cdot (r-h)]$$

Multiplying by the header length to get the volume and converting to gallons, we have

$$V_H = \tfrac{1}{2} [r \cdot 0.01745 \cdot r \cdot 2 \cdot \arccos [(r - h)/r] - 2\sqrt{h(2r-h)} \cdot (r-h)] \cdot L \cdot 7.481$$

$$= \tfrac{1}{2} [0.0349 \cdot r^2 \cdot \arccos [(r - h)/r] - 2\sqrt{h(2r-h)} \cdot (r-h)] \cdot L \cdot 7.481$$

where h = height of water above the bottom of the headers (0.14 ft)
r = radius of the headers (2.4 ft)
L = total length of the headers (282 ft)
V_H = volume of water remaining in bottom of headers (gallons)
7.481 = conversion factor from cu. ft. to gallons

Substituting, we have

$$V_H = \tfrac{1}{2} [0.0349 \cdot (2.4)^2 \cdot \arccos (0.942) - 2\sqrt{0.652} \cdot 2.26] \cdot 282 \cdot 7.481$$

$$= \tfrac{1}{2} [3.95 - 3.65] \cdot 282 \cdot 7.481$$

$$= 316 \text{ gallons}$$

The total volume in the drywell vent header system is the sum of V_{SJ} and V_H, or 11,220 gallons.

A6-3.4 Transport Time

As the LPS injects the sodium pentaborate solution, the solution will mix with the core spray flow and travel through the reactor and containment to the suppression pool. Each of the volumes identified above will tend to hold up the solution and delay its transport to the suppression pool.

The first holdup volume is the pool at the bottom of the reactor vessel. The volume of this pool was estimated to be between 9,000 and 32,312 gallons (including volume of the recirculation loops). Using only the core spray flow, this volume will undergo one complete exchange every 2.5 to 9.0 minutes. The LPS injection takes approximately 38 minutes, which includes 0.5 minutes for clearing the pump suction and discharge lines, calculated as follows:

1128 gallons / 30 gpm = 37.6 minutes

The pump discharge line is less than 100 feet long and is 1.5 inches in diameter. A 1.5-inch diameter line contains approximately 0.1 gallons per foot, so the discharge line contains approximately 10 gallons.

10 gallons / 30 gpm = 0.33 minutes

The pump suction line is approximately 15 feet long and is 2.5 inches in diameter. A 2.5-inch diameter line contains approximately 0.26 gallons per foot, so the suction line contains approximately 4 gallons.

4 gallons / 30 gpm = 0.13 minutes

By the end of injection, the volume in the vessel has undergone between 15 and 4.2 exchanges and is expected to have reached an equilibrium concentration determined by the LPS to core spray flow ratio. The percent of sodium pentaborate solution remaining in the transport pool is approximated by the relationship

$$P = (1/2^N) \cdot 100$$

where P = percent of sodium pentaborate remaining in the transport pool
N = number of complete transport pool volume exchanges

This is conservative, since it inherently assumes that 100% of the sodium pentaborate is present in the transport pool prior to the first exchange. Using this relationship, after seven additional vessel pool exchanges less than 1% of the injected sodium pentaborate will remain in the reactor. Therefore, after 18 to 63 minutes, essentially all of the sodium pentaborate solution will have been cleared from the pool at the vessel bottom and moved to the pool on the drywell floor. The total elapsed time for this phase of the transport is between 56 minutes and 1.7 hours (injection plus clearing time).

The volume of the pool on the drywell floor is calculated to be 74,032 gallons (9,896 cu. ft.), and undergoes one complete exchange every 20.6 minutes. The start of this phase occurs after all of the sodium pentaborate solution has entered the drywell pool. By this time, however, the drywell pool has undergone almost three complete exchanges, and some of the solution has already moved into the vent header system. Seven drywell pool exchanges will move more than 99% of the remaining solution to the drywell vent header volumes. The time to accomplish 7 exchanges is 144 minutes (2.4 hours).

The volume in the drywell vent headers is calculated to be 11,220 gallons. This volume turns over almost seven times faster than the drywell pool and will therefore be at approximately the same concentration level as the drywell pool. Since the drywell pool contains less than 1% of the total mass of the sodium pentaborate injected at this time, the vent header pools will contain much less than 1%, resulting in at least 99% of the sodium pentaborate being transported to the suppression pool.

The final volume is the suppression pool. Since the sodium pentaborate solution is introduced uniformly within this pool through the downcomer pipes, one complete exchange of the suppression pool volume is judged to be sufficient to ensure adequate initial mixing. Assuming that only the core spray pump is running, one complete exchange will be accomplished in approximately 3.3 hours. The value and adequacy of this exchange rate to maintain mixing of the suppression pool was discussed in Section A6-2 above. The sum of these time periods is the total time required to transport the sodium pentaborate to the suppression pool and ensure adequate mixing.

The maximum total time for the injection, transport, and mixing of 1,114 gallons of sodium pentaborate solution in the suppression pool is approximately 7.4 hours, which is within the 9-hour time calculated for the pool pH to drop below 7.0 without buffering.

A6-4. SENSITIVITY ANALYSIS – INJECTED VOLUME OF SODIUM PENTABORATE SOLUTION

The preceding evaluation was based on the injection, transport and mixing of 1,114 gallons of sodium pentaborate solution from the LPS storage tank to the suppression pool. Once accomplished, the resultant pool pH has been calculated to be 7.8. The acceptance criterion, however is that the suppression pool pH remains greater than or equal to 7.0. A sensitivity analysis was performed to determine the minimum quantity of sodium pentaborate solution required to achieve a pH of 7.0. The solution volume in the calculation spreadsheets used in Calculation H21C084 was adjusted to reach a final (30-day) pH value of 7.0. The minimum required sodium pentaborate solution volume is calculated to be 734 gallons. This value is 66% of the available volume of 1,114 gallons and provides sufficient margin to account for any potential sodium pentaborate hold-up or hideout not accounted for in this evaluation.

Note that the reduction in required injection volume only reduces the total injection time by approximately 13 minutes. The reduced volume has a significant impact on transport time, however, especially when considering the drywell pool, which has the longest transport hold-up time. If only 66% of the sodium pentaborate is required to achieve the target pH of 7.0, then less than 2 complete turnovers of the pool would be required [$(1/2^{(2)}) \cdot 100 = 25\%$ remaining]. This would reduce the total transport and mixing time by at least 1.7 hours, to approximately 5.7 hours.

A6-5. REFERENCES

1. NEDC-31446P – Supplement 4, "Nine Mile Point Unit 1 Loss-of-Coolant Accident Analysis with Two Spargers Available," General Electric Co., September 1993.

ATTACHMENT (6)

EVALUATION OF LPS INJECTION FLOW TRANSPORT AND MIXING

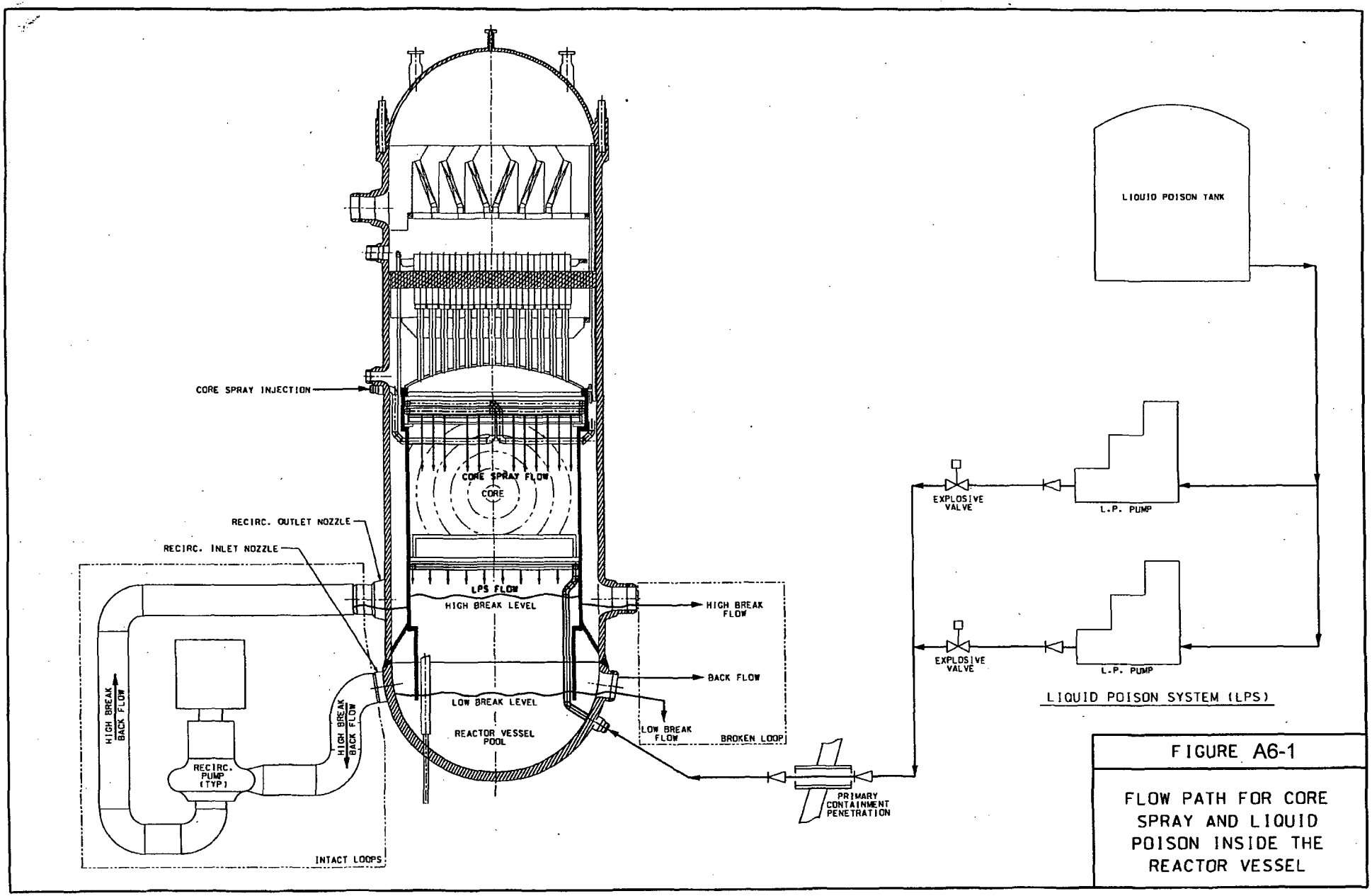

FIGURE A6-1

FLOW PATH FOR CORE SPRAY AND LIQUID POISON INSIDE THE REACTOR VESSEL

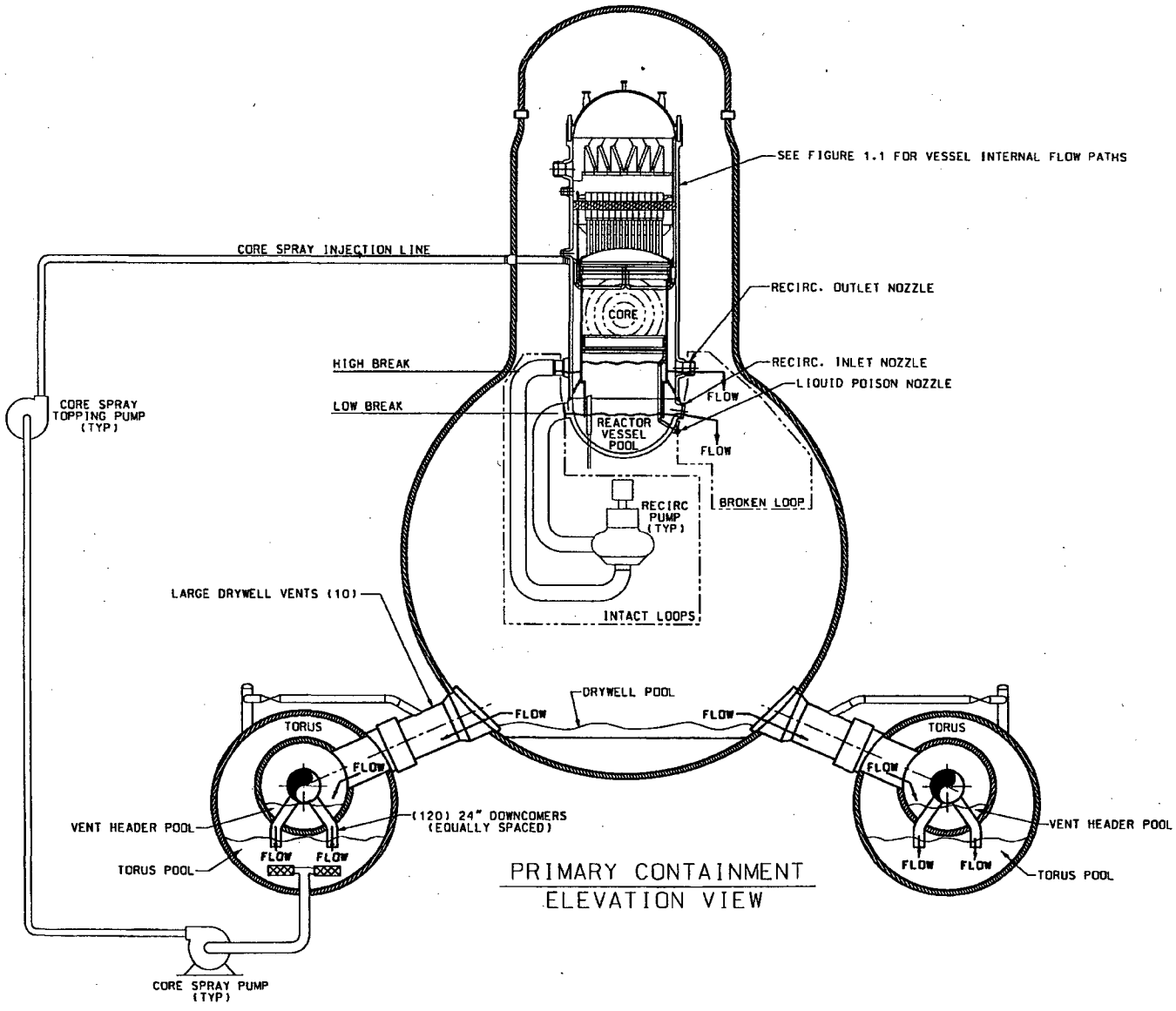

PRIMARY CONTAINMENT
ELEVATION VIEW

FIGURE A6-2

MIXED FLOW RETURN TO THE TORUS

ATTACHMENT (7)

CALCULATION OF NEW ATMOSPHERIC DISPERSION FACTORS

Nine Mile Point Nuclear Station, LLC
December 14, 2006

A7-1. INTRODUCTION

New atmospheric dispersion factors (X/Q values) are calculated for use in evaluating the radiological consequences of the Nine Mile Point Unit 1 (NMP1) design basis accidents. These calculations use meteorological data collected by the Nine Mile Point onsite meteorological measurements program for the five-year period from 1997 through 2001.This attachment provides information regarding the onsite meteorological measurement program and the X/Q calculation methodology, and summarizes the results of the calculations.

A7-2. ONSITE METEOROLOGICAL MEASUREMENTS PROGRAM

The Nine Mile Point Nuclear Station (NMPNS) meteorological measurement program is described in Nine Mile Point Unit 2 (NMP2) Updated Safety Analysis Report Section 2.3.3.2. The program meets the intent and recommendations of Regulatory Guide (RG) 1.23 (Reference A7-5.1) and NUREG-0654 (Reference A7-5.2) for the operational measurements program. The program consists of monitoring wind speed, wind direction, ambient temperature, and precipitation. The operability of the meteorological monitoring instrumentation ensures that sufficient meteorological data are available for estimating potential radiation doses to the public as a result of routine or accidental release of radioactive materials to the atmosphere. This capability is required to evaluate the need for initiating protective measures to protect the health and safety of the public.

The primary meteorological tower is of steel, open-lattice construction and is located approximately 0.5 miles west-southwest of the station near the shore of Lake Ontario. The primary tower is 61-m (200-ft) high and is instrumented with wind direction and speed sensors at three levels: 9 m (30 ft), 30 m (100 ft), and 61 m (200 ft). Sigma theta is derived for each of the three wind levels. Ambient temperature is measured at the 9 m (30 ft) level, and temperature differences are determined between the 9 m (30 ft) and 61 m (200 ft) levels. This is the primary method used to determine atmospheric stability. Dew point temperature is obtained at the 9 m (30 ft) level. Near the base of the tower, precipitation and barometric pressure are also measured. The primary tower is located in terrain that is characteristic of the area and at approximately the same elevation as finished plant grade. The terrain is predominately flat throughout the area and in the vicinity of the tower.

The backup wind direction and speed instrumentation is located east of the J. A. FitzPatrick plant on a 27 m (90 ft) utility pole. Data collected coincidentally from the primary tower and backup tower over the same three-year period have been analyzed. Based upon this analysis and an earlier study by Meteorological Environmental Services, Inc., the backup tower measurements are in general agreement with the primary tower and are adequate for use during emergency situations.

Meteorological instrumentation calibration schedules are specified to conform to RG 1.23 recommendations. Meters and other equipment used in calibrations are, in turn, calibrated at scheduled intervals. Inspection and maintenance of equipment is accomplished in accordance with procedures in the instrument manufacturer's manuals. Inspection is implemented by qualified technicians who are capable of performing the maintenance, if required.

Digital data processing at each meteorological tower is accomplished by a remote data acquisition system (RDAS) computer. These RDAS computers sample each sensor's analog processor at a rate of once per second and process the data into 1-, 15-, and 60-min averages. Averaged data are transmitted via modem to a central processing system (CPS) computer for access and storage. Each RDAS computer is housed in an environmentally-controlled instrument cabinet at the meteorological towers. The CPS computer is

housed in an environmentally-controlled meteorological computer building. Better than 90 percent data recovery is attained from each measuring and recording system.

A7-3. ATMOSPHERIC DISPERSION FACTOR CALCULATIONS

Meteorological data utilized for calculation of new atmospheric dispersion coefficients (X/Qs) were selected from the historical record of the NMPNS meteorological monitoring program. The period 1997-2001 was selected because it represents a complete and accurate data set that is representative of the site meteorological data. The data was reviewed to ensure instrumentation problems and missing or anomalous observations did not affect the validity of the data. This is consistent with the guidance in RG 1.194 (Reference A7-5.3) that considers five years of hourly observations to be representative of long-term trends.

Recorded meteorological hourly average data were used to generate joint frequency distributions of wind direction, wind speed, and atmospheric stability class, in accordance with the RG 1.23 and RG 1.145 (Reference A7-5.4). Wind roses and joint frequency distributions were reviewed for meteorological and climatological reasonableness and found to be acceptable prior to use. A review was also conducted on specific hourly data prior to the execution of the atmospheric calculations in the PAVAN and ARCON96 computer programs. This consisted of manual spot checks of the spreadsheet reformatted data in comparison with the raw data.

Three possible locations where accident radionuclide releases are assumed to occur are the reactor building blowout panel, the turbine building blowout panel, and the main stack. Information regarding these release points and their proximity to receptor locations is provided in Tables A7-1 and A7-2. Figure A7-1 is a site plan showing the relative locations of the release points and receptors.

A7-3.1 Control Room and Technical Support Center (Excluding Main Steam Line Break)

Control room and Technical Support Center (TSC) X/Q values were calculated using ARCON96 for various source/receptor scenarios using the guidance contained in RG 1.194. The scenarios were analyzed using the hourly-averaged meteorological joint wind and stability database for the five-year period from 1997 through 2001. All three of the assumed release points (the reactor building blowout panel, the turbine building blowout panel, and the main stack) were modeled as ground-level (vent) releases in accordance with RG 1.145 because their height is less than 2.5 times the highest adjacent structure. Conservative building wake areas, calculated considering the complexity of the geometry of the NMP1 structures, were input into ARCON96 to account for wake effects.

A7-3.2 Offsite – Exclusion Area Boundary (EAB) and Low Population Zone (LPZ)

The computer program PAVAN is used to determine X/Q values used in the assessment of dose consequences of design basis accidents in nuclear power stations. PAVAN is a straight line Gaussian dispersion model. The program implements the NRC guidance provided in RG 1.145. Utilizing joint frequency of occurrence distributions of wind direction, wind speed, and Pasquill atmospheric stability class, PAVAN calculates X/Q values as a function of direction for various time-averaging periods at the EAB and the outer boundary of the LPZ. Calculations are made from assumed ground-level (i.e. non-elevated) releases (such as vents and building penetrations), which are less than 2.5 times the height of adjacent solid structures, and from elevated releases (i.e. stacks). Three procedures are utilized for calculating X/Q: a direction-dependent approach, a direction-independent approach, and an overall site X/Q approach.

The PAVAN model contains certain model options for executing the program. The following table summarizes the options invoked for the EAB and LPZ X/Q calculations for NMP1.

Option No.	Description	Option Invoked?	
		Main Stack Release	Blowout Panel Release
1	Calculate σ_y and σ_x based on desert diffusion.	No	No
2	X/Q values include evaluation for no building wake.	No	No
3	ENVLOP calculations printed which describe upper envelope curve.	No	No
4	Print points used in upper envelope curve and calculation.	No	No
5	Null	---	---
6	Joint frequency distribution in % frequency format	No	No
7	Print X/Q calculation details	Yes	Yes
8	Distribute calm winds observations into first wind speed category.	No	No
9	Use site-specific terrain adjustment factors for the annual average calculations.	Yes*	No
10	Assume a default terrain adjustment factor for the annual average calculations. Option 10 is applied, which together with application of Option 9 means that site specific terrain factors will be used.	Yes	Yes

* Since there are no severe terrain features, such as deep valleys or mountains, in the vicinity of NMPNS to affect the diffusion of radionuclides from the evaluated main stack, the default terrain adjustment factors (TAF-1) were applied.

The reactor building blowout panel, the turbine building blowout panel, and the main stack are the assumed accident release points. The reactor and turbine building blowout panel locations do not qualify as elevated releases per Regulatory Guide 1.145. Therefore, these release points were executed by PAVAN as ground type releases. The main stack was executed as an elevated release. Source-to-receptor horizontal distances are 830 m (2,722 ft) for the EAB and 6,116 m (20,060 ft) for the LPZ. Due to the close proximity of the three release points, identical distances to the EAB and LPZ were used.

NMPNS meteorological data from the five-year period from 1997 through 2001 was used in the PAVAN analysis. The format of PAVAN meteorological input consists of a joint wind direction (based on sixteen 22.5 degree sectors), wind speed (12 intervals), and stability class (7 classes) occurrence frequency distribution. Since the NMPNS meteorological data fails to provide a maximum wind speed for category 12 winds, a conservative value of 60.5 m/s was selected. Maximum wind speed is required input for each wind speed category in PAVAN. The coastal sectors were not considered in determining the X/Q values for the EAB and LPZ.

A7-3.3 Control Room – Main Steam Line Break (MSLB) Puff Release

The MSLB accident evaluation utilizes an instantaneous "puff" release X/Q. The puff release is modeled in accordance with RG 1.194, Section C.5, with the following assumed site meteorological conditions:

- Wind Speed: 1 meter/second toward the receptor; and
- Stability Class F.

The distance from the turbine building blowout panel (the assumed MSLB release point) to the control room intake is 71.9 m (236 ft), as shown in Table A7-2. There is one air intake location. It takes approximately 136 seconds for the puff to pass completely over the NMP1 control room air intake. The control room air intake flow rate is the same during normal control room ventilation operation and emergency control room ventilation operation. As such, the control room air intake flow rate is modeled as a constant flow rate during the entire time that the MSLB puff release passes over the intake.

A7-4. SUMMARY OF RESULTS

The X/Q values resulting from the ARCON96 modeling analysis of each release point and meteorological database scenario for the required time intervals are shown in Tables A7-3 and A7-4 for the control room and TSC dose assessments, respectively.

The X/Q values for the EAB and LPZ calculated by the PAVAN modeling analysis of each release scenario are presented in Tables A7-5 and A7-6 for each of the time intervals required by RG 1.145.

For the MSLB instantaneous puff release, the integrated X/Q value calculated for the control room air intake is 9.979E-04 sec/m^3.

All input files for ARCON96 and PAVAN, including the meteorological data input files, are provided in Calculation H21C076 (see Attachment 8).

A7-5. REFERENCES

1. Regulatory Guide 1.23 (Safety Guide 23), "Onsite Meteorological Programs," February 1972

2. NUREG-0654, "Criteria for Preparation and Evaluation of Radiological Emergency Response Plans and Preparedness in Support of Nuclear Power Plants," Revision 1, November 1980

3. Regulatory Guide 1.194, "Atmospheric Relative Concentrations for Control Room Radiological Habitability Assessments at Nuclear Power Plants," June 2003

4. Regulatory Guide 1.145, "Atmospheric Dispersion Models for Potential Accident Consequence Assessments at Nuclear Power Plants," Revision 1, November 1982

Table A7-1
Release/Intake Elevations

Point of Interest	Elevation (ft)	Elevation (m)
Main Stack	350	106.7
Reactor Building Blowout Panel (relative to bottom of panel)	78.9	24
Turbine Building Blowout Panel (relative to bottom of panel)	72.4	22.1
Control Room Intake (height equal to roof elevation)	72	29.95
Technical Support Center	21	6.4

Table A7-2
Release/Intake Distances and Directions

Release/Intake	Horizontal Distance (ft)	Horizontal Distance (m)	Sector Bearing relative to true north
Unit 1 Reactor Building Blowout Panel (from midpoint of panel) / U1 Control Room Intake	340	103.6	149° SSE
Unit 1 Turbine Building Blowout Panel (from midpoint of panel) / U1 Control Room Intake	236	71.9	117° ESE
Unit 1 Main Stack / Unit 1 Control Room Intake	400	121.9	166° SSE
Unit 1 Reactor Building Blowout Panel (from midpoint of panel) / U1 Technical Support Center	343	104.5	86° ESE
Unit 1 Turbine Building Blowout Panel (from midpoint of panel) / U1 Technical Support Center	328	100.0	86° E
Unit 1 Main Stack / Unit 1 Technical Support Center	330	100.6	140° SE

Table A7-3
ARCON96 Results - X/Q Values for the Control Room

Release Point	X/Q Dispersion Coefficients (s/m^3)				
	0-2 hrs	2 – 8 hrs	8 – 24 hrs	1–4 days	4–30 days
U1 Reactor Building Blowout Panel	4.82E-04	2.61E-04	9.25E-05	6.70E-05	4.93E-05
U1 Turbine Building Blowout Panel	1.03E-03	5.85E-04	2.07E-04	1.75E-04	1.52E-04
U1 Main Stack	2.27E-04	1.26E-04	4.30E-05	3.58E-05	2.59E-05

Table A7-4
ARCON96 Results - X/Q Values for the TSC

Release Point	X/Q Dispersion Coefficients (s/m^3)				
	0-2 hrs	2 – 8 hrs	8 – 24 hrs	1–4 days	4–30 days
U1 Reactor Building Blowout Panel	7.09E-04	5.60E-04	2.345E-04	1.71E-04	1.41E-04
U1 Turbine Building Blowout Panel	5.91E-04	4.26E-04	1.63E-04	1.35E-04	1.16E-04
U1 Main Stack	3.47E-04	2.42E-04	8.22E-05	6.06E-05	5.00E-05

Table A7-5
PAVAN Results - Reactor Building Blowout Panel Release X/Q Values

Boundary	X/Q Dispersion Coefficients (s/m^3)				
	0 – 2 hours	0 – 8 hours	8 – 24 hours	1 – 4 days	4 – 30 days
EAB	1.90E-04	---	---	---	---
LPZ	---	1.63E-05	1.10E-05	4.67E-06	1.67E-06

Table A7-6
PAVAN Results - Main Stack Release X/Q Values

Boundary	X/Q Dispersion Coefficients (s/m^3)				
	0 – 2 hours	0 – 8 hours	8 – 24 hours	1 – 4 days	4 – 30 days
EAB	5.98E-05	---	---	---	---
LPZ	---	2.12E-05	8.40E-07	3.45E-07	1.11E-07

Figure A7-1

Site Plan Showing Relative Locations of Release and Intake Points