Official Transcript of Proceedings ACRST-3376

NUCLEAR REGULATORY COMMISSION

Title: Advisory Committee on Reactor Safeguards Reliability and Probabilistic Risk Assessment Subcommittee

Docket Number: (not applicable)

PROCESS USING ADAMS
TEMPLATE: ACRS/ACNW-005

SUNSI REVIEW COMPLETE

Location: Rockville, Maryland

Date: Thursday, December 14, 2006

Work Order No.: NRC-1373 Pages 1-299

ORIGINAL

NEAL R. GROSS AND CO., INC.
Court Reporters and Transcribers
1323 Rhode Island Avenue, N.W.
Washington, D.C. 20005
(202) 234-4433

TR04

ACRS OFFICE COPY
RETAIN FOR THE LIFE OF THE COMMITTEE

DISCLAIMER

UNITED STATES NUCLEAR REGULATORY COMMISSION'S

ADVISORY COMMITTEE ON REACTOR SAFEGUARDS

December 14, 2006

The contents of this transcript of the proceeding of the United States Nuclear Regulatory Commission Advisory Committee on Reactor Safeguards, taken on December 14, 2006, as reported herein, is a record of the discussions recorded at the meeting held on the above date.

This transcript has not been reviewed, corrected and edited and it may contain inaccuracies.

1 UNITED STATES OF AMERICA

2 NUCLEAR REGULATORY COMMISSION

3 + + + + +

4 ADVISORY COMMITTEE ON REACTOR SAFEGUARDS

5 RELIABILITY AND PROBABILISTIC RISK ASSESSMENT

6 SUBCOMITTEE MEETING

7 + + + + +

8 THURSDAY,

9 DECEMBER 14, 2006

10 + + + + +

11 The Advisory Committee met at 8:30 a.m. in

12 room T-2B1 of the U.S. Nuclear Regulatory Commission,

13 One White Flint North, 11555 Rockville Pike,

14 Rockville, Maryland, Dr. George E. Apostolakis,

15 Chairman, presiding.

16 MEMBERS PRESENT:

17	GEORGE E. APOSTOLAKIS	Chairman
18	WILLIAM J. SHACK	Vice Chairman
19	GRAHAM WALLIS	Member
20	THOMAS KRESS	Member
21	MARIO V. BONACA	Member
22	MICHAEL CORRADINI	Member
23	JOHN D. SIEBER	Member
24	SAID ABDEL-KHALIK	Member
25	OTTO L. MAYNARD	Member

1 ACRS STAFF PRESENT:

2 ERIC A. THORNSBURY

3

4

5

6

7

8

9

10

11

12

13

14

15

16

17

18

19

20

21

22

23

24

25

AGENDA ITEM	PAGE
WELCOME:	
George Apostolakis	4
OVERVIEW OF ESBWR PRA:	
Rick Wachowiak	6
ADJOURN:	
George Apostolakis	299

1 P-R-O-C-E-E-D-I-N-G-S

2 8:30 a.m.

3 CHAIRMAN APOSTOLAKIS: The meeting will
4 now come to order. This is a meeting of the Advisory
5 Committee of Reactor Safeguards Subcommittee on
6 Reliability and Probabilistic Risk Assessment. I'm
7 George Apostolakis, Chairman of the Committee.
8 Members in attendance are Said Abdel-Khalik, Mario
9 Bonaca, Tom Kress, Otto Maynard, Bill Shack and Jack
10 Sieber.

11 The purpose of the meeting is to reduce
12 electric dependence of the ESBWR Probabilistic Risk
13 Assessment. The subcommittee will gather information,
14 analyze relevant issues and facts and formally propose
15 solutions and actions as appropriate by deliberation
16 by the close of the meeting. Eric Thornsbury is the
17 designated federal official for the meeting.

18 There are several presentations in today's
19 meeting that have been announced as part of the
20 matters of this meeting, previously published in the
21 Federal Register on December 4, 2006.

22 A transcript of the meeting is being kept
23 and will be made available as stated in the Federal
24 Register notes. It is requested that speakers first
25 identify themselves and speak with sufficient clarity

1 and volume, so that we can readily be heard.

2 We have received no comments or asking

3 time to make oral statements from members of the

4 public regarding today's meeting.

5 This morning's presentation from GE will

6 provide some background on the ESBWR PRA and then

7 there will be some updates to the PRA since our last

8 meeting. This afternoon, we will hear from GE on the

9 specific issues that were identified during our

10 previous meeting. Tomorrow, we plan to hear from the

11 staff regarding other matters of interest as

12 identified in their request for additional

13 information. This meeting is a peer review meeting,

14 so member discussion by this subcommittee or the full

15 Committee is expected at this time.

16 Time will be set aside at the end of this

17 meeting to identify technical issues that we need to

18 hear more about during subsequent meetings. Specific

19 issues of concern are identified and under a letter

20 from the Committee we can bring them to the full

21 Committee. Otherwise, we will expect that our review

22 of the ESBWR PRA will feed into our letter documenting

23 our PRA review where ESBWR designs have certification.

24 We will now proceed with the meeting and

25 I call upon Mr. Rick Wachowiak from GE to begin the

presentations.

MR. WACHOWIAK: All right. Good morning. Do you want me to be here by the microphone probably?

CHAIRMAN APOSTOLAKIS: Yeah.

MR. WACHOWIAK: Okay. The first thing I want to do this morning is to go quickly over some aspects of the ESBWR device. I think for our new Members, some member of the subcommittee, I'll go through this fairly quickly, since most of you are familiar with it.

Okay. We're going to start with, and this is for the whole day, the overview of the ESBWR and then some ESBWR PRA. We're going to talk. In that ESBWR PRA portion, we were asked to go through some significant sequences. I brought some example sequences to walk through and those we will pass out in the next section. Then, we want to talk about some significant items from Revisions 1 of the PRA and then the upcoming Revision 2 of the PRA, which we will talk about that.

An issue that has been on the minds of us and of the staff is in the area of regulatory treatment of non-safety systems, so we're going to go through that issue and the proposal that we made to the staff a couple of weeks ago. Then later on in the

1 afternoon, we'll get into some specific items that we
2 had discussed at the previous meeting. There is a
3 couple of different methodology issues that we want to
4 talk about. And then some things about external
5 events. So we'll cover those in the afternoon.
6 Some background for this meeting. The
7 last time we met was in April of 2006. It was shortly
8 after portions of the PRA had been revised and sent
9 in, so most of the members of the subcommittee had
10 seen Rev 0 as a PRA and the staff was in the middle of
11 reviewing pieces of Revision 1 of the PRA. You now
12 should all have the complete Revision 1 of the PRA and
13 it has been available, I think, since September.
14 MEMBER SIEBER: September.
15 MR. WACHOWIAK: The pieces came in at
16 different times, but I think the whole disk came in at
17 once in September.
18 MEMBER SIEBER: September 8.
19 MR. WACHOWIAK: So now everybody should
20 have seen everything that is in Revision 1. When we
21 talked last time, there were some concern about this
22 disconnect in what you have seen and what we were
23 talking about and what the staff was reviewing. So we
24 talked about having this further conversation today.
25 And also, we tried to set the timing up so that any

1 issues that come out of this meeting can be reflected
2 in Revision 2 as it is going to be submitted
3 forthcoming. We will talk about that a little bit
4 later on today.
5 So the first part we're going to talk
6 about this morning is a little bit about the strategy
7 for risk management. Then we'll get into some
8 accident sequences produced by the analysis.
9 Basically, I brought the top few sequences and then
10 examples to go through, the sequence description and
11 the cutsets associated with those.
12 Later on today then, we're going to talk
13 about design changes that have been made to the plant,
14 that you have probably seen in DCD Revision 2, but are
15 not yet reflected in the PRA, that's the update that
16 we're going to do. As I said, we talked about or
17 we'll be talking about readiness.
18 So quickly, so everybody is on the same
19 page here, ESBWR is a 4,500 megawatt thermal power
20 reactor. We will get about 1,500, depending on what
21 we do with the BOP, 1,600 megawatts of electric out of
22 it. It's a natural circulation plant, so there are no
23 recirculation pumps and we also use passive safety
24 systems, so there's no ECCS pumps. And like you are
25 probably used to seeing, the passive systems are set

1 up so that we have 72 hour capability to respond to
2 accidents and transients with our passive systems
3 before any sort of operator action or replacement is
4 needed.
5 I'll let most of you go ahead and look at
6 these things on your own. We won't go through each of
7 the systems here, that's not the purpose of this
8 meeting. But this just provides an overview of all
9 the different systems. Passive systems are contained
10 inside the containment and then we have other active
11 backup systems that are out in the other areas of the
12 plant. And if you have any questions about this
13 later, just let me know.
14 The ESBWR vessel is a little different
15 than past BWRs. First, as you'll notice, there is no
16 recirculation pumps. The other thing that you notice
17 is that there is significant penetrations in the
18 vessel that are below the top of the core. There are
19 some drain penetrations and things like that lower on
20 down, that the pipes that process steam, steam flow,
21 through flow connections are all above the core. This
22 provides the ability to perform the passive functions
23 and to provide additional margin in accident
24 sequences. Then we take in the PRA.
25 MEMBER WALLIS: Just --

1 MR. WACHOWIAK: Go ahead.

2 MEMBER WALLIS: Where would 1.5 be --

3 above the core be on this?

4 MR. WACHOWIAK: On this slide, the core

5 area is here.

6 MEMBER SIEBER: Where are we?

7 MR. WACHOWIAK: And so 1.5 meters above

8 the core. This model is in 24. The equalizing line

9 in is 1 meter above the core, so that's right --

10 probably right around the 5.

11 MEMBER SIEBER: Right around the 5. And

12 the ground level is positive of that, right?

13 MR. WACHOWIAK: If you --

14 MEMBER SIEBER: You draw this picture, you

15 try to draw where the surface of the earth leak picks

16 up for the I on this here.

17 MR. WACHOWIAK: Yes, I would say that

18 grade level is probably about half way up the vessel.

19 MEMBER SIEBER: Okay.

20 MR. WACHOWIAK: I can show that better on

21 a slide that's coming up.

22 MEMBER SIEBER: All right. That's where

23 I thought it was. Okay.

24 MR. WACHOWIAK: Here is one we can show.

25 Grade level in this plant is right near the top of the

1 water in the suppression pool, so right around here
2 somewhere.
3 MEMBER SIEBER: Okay.
4 MR. WACHOWIAK: Some of the features that
5 we have, the solid background on this schematic is the
6 containment boundary. In this direction at this
7 angle, you can see one of our gravity-driven cooling
8 system pools up on the top. We have a suppression
9 pool, just like other BWRs, so it is a pressure
10 suppression containment. Up above the top of the
11 containment, there is water for the passive residual
12 heat removal system. That provides both the
13 resonation condensers and the passive containment pool
14 system.
15 Another area of interest here is that the
16 -- the spent fuel pool is now down, as I said, gray
17 was about half going, the fuel pool is down below
18 grade in a separate building and is better protected
19 than some other previous designs. We'll take a look
20 at it from the other direction. And this one you can
21 see the heat exchangers for the passive containment
22 pool system here. And if we drilled into the drawing
23 you could see the isolation condensers also. But
24 these pools up on top are used for residual heat
25 removal. These are gravity cooling system pools, so

1 those would drain the reactor in the case of an ECCS
2 actuation.
3 MEMBER MAYNARD: With respect to the pool
4 so low, just for curiosity, how do you open the flood
5 gates for refueling? I mean, bringing on the fuel for
6 some kind of event?
7 MEMBER SIEBER: Yes.
8 MR. WACHOWIAK: Yes, in this we have an
9 incline fuel transfer system that has been used on
10 other BWRs in the past. It's a little different in
11 this case, because it doesn't go through the
12 containment boundary. It's all outside of the
13 containment. So for refueling, you would take the
14 reactor vessel head off. This entire area is flooded
15 with water and the fuel comes out and is transferred
16 immediately down.
17 MEMBER SIEBER: The shaft gets flooded.
18 MR. WACHOWIAK: I'm sorry?
19 MEMBER SIEBER: So there is water and the
20 whole shaft is --
21 MR. WACHOWIAK: Yes.
22 MEMBER SIEBER: All right.
23 MR. WACHOWIAK: The shaft is filled with
24 water and there's a signal involved. Valves are
25 locked. You know, they keep it cool as it gets down

1 through the tube. A similar current design.

2 Now, for the PRA we get into a more

3 simplified description of what the containment looks

4 like. This slide here has been presented at various

5 times of important things. Isolation condenser pool,

6 ECC pool, these are all interconnected as we'll see in

7 a moment. The gravity-driven cooling system provides

8 water to the vessel and it can also be used for lower

9 cavity flooding. These are squib valves, squib

10 operated in the ECCS system, depressurization valves

11 to equal out the reactor vessel pressure with the

12 containment, so that GDCS will work properly.

13 We have what we call MCOP. It is

14 basically just a hard type bed, manually operated, so

15 it's not an automatic rupture to this and some other

16 plants they use. If there are no other questions on

17 this?

18 MEMBER SIEBER: You have a lot of squib

19 valves, right?

20 MR. WACHOWIAK: There is eight

21 depressurization squib valves, there are eight GDCS

22 squib valves, four equalizer line squib valves and

23 then the BiMAC system also employs squib valves. I

24 think there are 12 of those in the current --

25 MEMBER SIEBER: 32?

1 MR. WACHOWIAK: A lot of squib valves.

2 MEMBER SIEBER: And in your PRA, where do
3 you get your reliability data from? Since I don't
4 ever recall a squib valve operating during operation.

5 MR. WACHOWIAK: The basic value that we
6 have used for the squib valves comes from the EPRI URD
7 for passive plants. There is a value that's used on
8 that. We are also looking into other sources of data
9 for the squib valves. As we will see in one of the
10 upcoming presentations, some of these squib valves are
11 not like the squib valves that have been used by
12 standby liquid control systems in the past.

13 The gauge BiMAC squib valves are probably
14 very similar to what you used in standby liquid
15 control systems today, but the GDCS squib valves is a
16 different type of design and the DPD is yet another
17 type of design. The DPD, I think, is described in the
18 DCD. That valve has been tested as part of the ESBWR
19 program.

20 MEMBER SIEBER: Um-hum.

21 MR. WACHOWIAK: And the GDCS squib valves,
22 there is a conceptual design for DCD. The valve
23 people are still working on exactly what's the optimum
24 configuration for that one.

25 MEMBER ABDEL-KHALIK: Is this the right

time to talk about the reliability of the squib valves or is there going to be another sort of presentation later on that talks about this?

MR. WACHOWIAK: I think this will be okay to talk about the reliability --

MEMBER ABDEL-KHALIK: Okay.

MR. WACHOWIAK: -- of squib valves.

MEMBER ABDEL-KHALIK: Well, I have an alert service bulletin issued by Bell Helicopter.

MR. WACHOWIAK: Okay.

MEMBER ABDEL-KHALIK: To owners and operators of three different models of helicopters with emergency flow kit using squib actuated inflation valves. And it essentially says that during about an eight month period, all those helicopters, all those valves, the supplier of the valves provided the wrong squib. Now, do you consider that to be a common failure for your valves? Because you are not going to make your own squibs, presumably.

MR. WACHOWIAK: That's correct. We're going to be buying them.

MEMBER SIEBER: Controls.

MEMBER ABDEL-KHALIK: Right. If that is the case, would you still sort of stick by that number of 3.6×10^{-5} as a public mode of failure of valves? I

1 mean, after all you have no idea that you have the
2 wrong squib for the valves.
3 MEMBER SIEBER: It's sort of hard to test,
4 too.
5 MR. WACHOWIAK: But the weight -- well, in
6 that particular situation, I'm trying to see, we would
7 have an analogy here that we do have a test program
8 for our squib valves, but it's similar to what is
9 being done with the existing plants where the squib
10 charges would be taken out during an outage and some
11 sample is tested. So it's not that we would never
12 know, but, once again, if you put in a bad batch
13 during an outage, then there is not much you can do
14 about it until the next time you come down.
15 One of the things that we --
16 MEMBER SIEBER: You would have a portion.
17 MR. WACHOWIAK: Yes, that would --
18 MEMBER SIEBER: If you identified it
19 during operation, the next time you come down, about
20 10 minute after you identified it, right?
21 MR. WACHOWIAK: If all of the squibs were
22 the same.
23 MEMBER SIEBER: Right.
24 MR. WACHOWIAK: From the same batch, yes.
25 That would be the case. What we have talked about in

1 the reliability and maintainability program, which I
2 don't think is described in the DCD, but we're worried
3 about things like that. So what we would recommend in
4 that case is that you don't put in all the squibs from
5 the same batch. You would use a batch rotation, so
6 that, you know, you get your order of squib valves
7 from the manufacturer, but only a portion of the ones
8 that are in the containment would actually be from
9 that shipment is one thing.
10 The other that we were considering in the
11 past, which I'm not sure that our current valve
12 engineer has in the front of his mind at this point in
13 time, is potentially to have different types of squibs
14 of the same valve. We will be talking a little bit
15 later this morning probably before lunch about the
16 specific squib arrangement on these, explosive charge
17 arrangement and these valves.
18 Each one of these valves actually has four
19 explosive charges on it. And it's -- I would envision
20 that of those four charges, you wouldn't have exactly
21 the same thing from exactly the same batch. They
22 would be staggered through different purchase orders.
23 MEMBER ABDEL-KHALIK: Right. My reading
24 of that as far as the program with automatic
25 depressurization system, that's where you twist the

1 squibs in or you have where you just put the valves.
2 MR. WACHOWIAK: Um-hum.
3 MEMBER ABDEL-KHALIK: Before you replace
4 them. But the value system, the testing program
5 doesn't indicate that those squibs are ever tested.
6 MR. WACHOWIAK: Well, we'll have to get
7 that updated. Those should also be tested just like
8 the DPDs. It's an ECCS system. The testing program
9 between the two systems should be, I would say, nearly
10 identical.
11 MEMBER ABDEL-KHALIK: I mean, my concern
12 is that, you know, this is presumably an industry that
13 would have, one would guess, Q&A standards comparable
14 to what you would have in the plant.
15 MR. WACHOWIAK: Right.
16 MEMBER ABDEL-KHALIK: And yet something
17 like this happens for different models, over a long
18 period of time and it seems anything -- logical that
19 the same thing could actually happen. You can have
20 squibs that are too small, that the valves wouldn't
21 open. You can have squibs that are too big and you
22 can actually cause a failure of the lines. So we need
23 a probability of a few times 10^{-5}, just seems a little
24 too low.
25 MEMBER SIEBER: Well, you can't test them.

1 You know, they are a one trial valve. Set it off as
2 the, you know --
3 MR. WACHOWIAK: The issue --
4 MEMBER SIEBER: -- the prototype.
5 MR. WACHOWIAK: The issue that Said is
6 raising is that of common cause failure.
7 MEMBER ABDEL-KHALIK: Right.
8 CHAIRMAN APOSTOLAKIS: So testing would
9 not help you there. Testing would help you with the
10 reliability of individual valves.
11 MEMBER ABDEL-KHALIK: Right.
12 CHAIRMAN APOSTOLAKIS: It depends on what
13 you are testing to determine the reliability or
14 testing to make sure the valves are working before you
15 use them.
16 MEMBER MAYNARD: Well, they can contribute
17 though the testing if you -- when you got them back in
18 if you tested the sample before you put the new valves
19 in. You would have a better chance of catching it.
20 No one tests them after you have taken them out.
21 MEMBER SIEBER: We have to test them, yes.
22 MR. WACHOWIAK: So what I'm taking out of
23 this is that we need to discuss more about the testing
24 program and how we're going to prevent common cause
25 issues of these valves in our documentation, at this

1 point, while you're doing the review. And I think we
2 can do that. As you will see, when we get into the
3 instrument and control system discussion that we'll
4 have a little later on today, we're going through
5 great pains to try to eliminate strangers, maybe it's
6 the wrong word, but just unknown common cause
7 failures, things that we haven't seen in the past.
8 As you will see in that system when we
9 discuss that, we've got an entirely diverse system
10 that we put in just to address common mode failures
11 that we may not be able to see and that may not have
12 been evident from the data that is out there in the --
13 or maybe in some of the other industries also.
14 I would not see that the squib testing
15 program would be much different. We will do things to
16 minimize the common cause. As examples, testing parts
17 of the batch before it is installed. Not using the
18 same batch everywhere and possibly --
19 CHAIRMAN APOSTOLAKIS: You did a
20 sensitivity analysis where you increased the failure
21 rate of the valves, the individual valves, by a factor
22 of applying a factor of 10.
23 MR. WACHOWIAK: Right.
24 CHAIRMAN APOSTOLAKIS: Perhaps you should
25 also do some sensitivity analysis on the common cause

1 failure. One of the problems that you had that was
2 not commonly occurring is you have too many of them.
3 You are not talking about a common cause failure of
4 two components. You are talking about four, five,
5 six, seven. And you put the factor of 10, I believe,
6 something like that, but that would be seven of them
7 will fail. But maybe more sensitivity analysis,
8 because if you assume the factor of 10 on the regular
9 failure rate, the common -- the core damage frequency
10 goes up only about by a factor of 10. From 10^{-8} to 10^{-}
11 ^{7}.
12 MR. WACHOWIAK: Well, when we did that, we
13 also varied the common cause failure that basically
14 the core damage frequency in Revision 1 is,
15 approximately, linear with the failure rate of the
16 squib valve. So if you increase the squib valve
17 failure rate by a factor of 10, core damage frequency
18 goes up by a factor of 10.
19 CHAIRMAN APOSTOLAKIS: Right.
20 MR. WACHOWIAK: So yes, when we did that
21 sensitivity, we did vary the common cause terms also.
22 What we didn't vary were the data.
23 CHAIRMAN APOSTOLAKIS: Okay. I mean, the
24 sensitivity analysis is fine, but the uncertainty of
25 that, it seems there was a lot of uncertainty. Maybe

there is multiple Greek letters around the circumference.

MR. WACHOWIAK: Right.

CHAIRMAN APOSTOLAKIS: Including of course, the separate individual reliability of the failure rate of the valves. You seem to be taking this uncertainty on common sensibility studies. The studies, the way I see it, are just plain calculations where you take a quantity and multiply it by something. There were some more, but human error aside, there are two and so on, which is a pretty serious assumption. I mean, I'll grant you that.

Maybe a more careful uncertainty analysis combined with sensitivity would give us more insights, but everything seems to be rather 10^{-7}, but I don't think you ever go above that, no matter what you do. So we will discuss it when you come up with it.

MR. WACHOWIAK: Right. And we'll also -- I think after lunch I've got a discussion on common cause --

CHAIRMAN APOSTOLAKIS: Okay.

MR. WACHOWIAK: -- on what we're able to do in Revision 2 with common cause and specifically what you're talking about here is included in the update where we will want to --

1 CHAIRMAN APOSTOLAKIS: Okay. I have some
2 -- here we want to know what the subcommittee is
3 interested in, at this time, would be better.
4 MR. WACHOWIAK: Right. Because once
5 again, we're using data from valves that aren't
6 exactly the same kind of valves that we have here now
7 and we're using our common cause factors based -- the
8 generic common cause factors not even specific to the
9 squib valves. So there would be some uncertainty
10 there and we need to do -- we'll expand the treatment
11 of that in the next revision.
12 CHAIRMAN APOSTOLAKIS: You said there that
13 the basic failure rate you took from the utility
14 requirement document?
15 MR. WACHOWIAK: Yes.
16 CHAIRMAN APOSTOLAKIS: Where did they get
17 it from?
18 MR. WACHOWIAK: Where did they get it
19 from?
20 CHAIRMAN APOSTOLAKIS: Yes. You don't
21 know? That's okay.
22 MR. WACHOWIAK: I don't know. I'm sorry.
23 CHAIRMAN APOSTOLAKIS: That's all right.
24 It's so similar to that, because they came from the
25 same table.

1 MR. WACHOWIAK: Okay. Any more on --

2 MEMBER SIEBER: What do we have? The

3 problem we have is two simple requirements. You said

4 the CDF tracks the reliability of the squib valve.

5 MR. WACHOWIAK: Yes.

6 MEMBER SIEBER: That tells me that the

7 mitigation system is designed on depressurization.

8 But you do have active components where you could

9 recover from some action to that.

10 MR. WACHOWIAK: Yes.

11 MEMBER SIEBER: And under that

12 circumstance, that would be the difference between

13 those two curves, reliability and the CDF.

14 MR. WACHOWIAK: Something like they have.

15 MEMBER SIEBER: Yes.

16 CHAIRMAN APOSTOLAKIS: There was another

17 contribution there between the active systems.

18 MR. WACHOWIAK: Right.

19 CHAIRMAN APOSTOLAKIS: But I think what

20 Rick was saying was the sequences, where the reactor

21 system was failing.

22 MR. WACHOWIAK: Right. Every sequence

23 eventually passes through one of these.

24 CHAIRMAN APOSTOLAKIS: Yes.

25 MR. WACHOWIAK: And the passive system.

1 MEMBER SIEBER: Even though this is a
2 passive mitigation?
3 MR. WACHOWIAK: Oh, yes.
4 MEMBER SIEBER: I would think that you
5 would at least place your lines on that system just so
6 that you don't mess up the plant as much as you would
7 otherwise do.
8 MR. WACHOWIAK: Absolutely.
9 CHAIRMAN APOSTOLAKIS: Of course, there's
10 the matter we love to question here and there are a
11 lot of -- the passive system itself. It's simple.
12 MEMBER SIEBER: Well, gravity is pretty
13 dependable. The question is where are all the
14 differential pressures?
15 CHAIRMAN APOSTOLAKIS: There are various
16 uncertainties relevant for -- and so on.
17 MEMBER SIEBER: Yes. Yes, you are right.
18 MEMBER KRESS: So that would probably be
19 okay.
20 CHAIRMAN APOSTOLAKIS: Okay. Let's move
21 on.
22 MEMBER SIEBER: Thank you.
23 MR. WACHOWIAK: In one of the systems
24 we'll be talking about in the -- where we discuss the
25 plant design a little later on, at least the isolation

condenser system, and that's one of the -- it would be the preferred system to use if we can in any accident. It's the tidiest of all of our decayed heat removal systems. Okay.

In the previous diagram we just had the deluge lines going down in the lower drywell. This is an expansion of what is actually down in the lower drywell. It's our core catcher named BiMAC, Basemat-Internal Melt Arrest and Coolability System. Basically, the way it is set up is that when the core comes down into the lower drywell, we have a walkway, if you will, above this. It will be, essentially, transparent to the core. It will come down in. There is a layer of refractory material currently envisioned to be zirconium oxide.

MEMBER KRESS: Is that walkway iron?

MR. WACHOWIAK: What's that?

MEMBER KRESS: Is that walkway iron?

MR. WACHOWIAK: I don't know that it has been specified at this point. Is there --

MEMBER KRESS: Well, I was thinking --

MEMBER SIEBER: We won't be able to use it.

MEMBER KRESS: I was thinking it may become part of the melt.

1 MEMBER SIEBER: Yes, sure.

2 MR. WACHOWIAK: It could become part of

3 the melt.

4 MEMBER KRESS: Sometimes oxide and an iron

5 mix, you know, steel mixture.

6 MR. WACHOWIAK: Yes. I don't think that

7 the material has been specified. But as we look for

8 materials for things like that, we have to look at

9 other interactions with what might be going on in the

10 lower drywell at that point. So we're probably not

11 going to make it out of something like zirconium or

12 something like that, that we know is an issue. But

13 the materials for this as well as other things in the

14 drywell, the cabling in the drywell, we have got to

15 worry about the materials in the control line drive

16 mechanisms, all those are materials issues that would

17 need to be addressed here.

18 So we have embedded in this layer in a

19 grid. Right now, the working idea is a grid of 30

20 blocks that each have two thermal couples in there and

21 if any two of adjacent thermal couples detect a high

22 temperature, we would activate the squib valves, the

23 water would come down through the downcomer here and

24 then spread up through each of the pipes on the side

25 providing a forced connection cooling on the bottom.

1 It spills over onto the top of the melt and there is
2 a return path there to allow for natural circulation
3 in the long-term.
4 VICE CHAIRMAN SHACK: Now, how does the
5 area here confer with that BWR? In the ABWR?
6 MR. WACHOWIAK: In the ABWR. This wet
7 area. I think it's a little bit larger. We've got
8 about 100 square meters of floor area in this one. So
9 I think it's a little bit bigger than ABWR, but given
10 the lesser size of or approximately the same, I
11 wouldn't expect it to be that much different though.
12 MEMBER KRESS: The flow through those
13 tubes, right, will be two phased still?
14 MR. WACHOWIAK: Initially, as it starts to
15 cool the core, there will be some two phase through
16 here. The calculations show that it is going to be a
17 slug flow, in the worst case.
18 MEMBER KRESS: Um-hum.
19 MR. WACHOWIAK: And we won't get any
20 dryout. We won't get bad pressure or things like
21 that.
22 MEMBER KRESS: That's what I was worried
23 about, the bad pressure stopping the flow and getting
24 dry.
25 MR. WACHOWIAK: That's one of the things

1 that we are concerned with, too. As we speak, we are
2 putting together an experiment out in Santa Barbara
3 that is going to test for just those things.
4 MEMBER KRESS: What would you use for
5 that, thermal?
6 MR. WACHOWIAK: You can use electric
7 heating.
8 MEMBER SIEBER: We will focus on the core
9 panel.
10 MR. WACHOWIAK: Right. Yes, this is just
11 to --
12 CHAIRMAN APOSTOLAKIS: Yes, this will be--
13 MR. WACHOWIAK: I don't have any other
14 presenters that have material for this.
15 MEMBER KRESS: We can talk about this some
16 other time.
17 MEMBER SIEBER: Maybe at another meeting.
18 MR. WACHOWIAK: Yes.
19 MEMBER KRESS: Within theory.
20 MR. WACHOWIAK: What?
21 MEMBER KRESS: Within the core.
22 MEMBER SIEBER: We're going to wake up.
23 MR. WACHOWIAK: Okay.
24 MEMBER SIEBER: Our other members will be
25 dealing with that when this is discussed.

1 CHAIRMAN APOSTOLAKIS: Okay. Let's move
2 on.
3 MR. WACHOWIAK: Okay.
4 CHAIRMAN APOSTOLAKIS: By the way, those
5 slides are excellent. I would really like this one.
6 MR. WACHOWIAK: Thank you.
7 CHAIRMAN APOSTOLAKIS: You must have a
8 full department of artists, good ones. Did you do
9 them yourself, Rick?
10 MR. WACHOWIAK: Some of them I did. Most
11 of the pictures though we had people who drew the
12 pictures.
13 VICE CHAIRMAN SHACK: Save some of the
14 money next time and put bookmarks in the PRA file.
15 MEMBER SIEBER: And course notes outside.
16 MR. WACHOWIAK: Noted.
17 CHAIRMAN APOSTOLAKIS: And the COL things.
18 MR. WACHOWIAK: One of the things I just
19 want to put up here for those that aren't familiar
20 with this plant, in a LOCA, as we said, all the pipes
21 are connected up above the core, so we don't get a lot
22 of water loss during the LOCA scenarios. Even in the
23 case of what where we had these bottom drain wings
24 over here, the system is actually passive, so that
25 instead of as in the BWR current fleet, where the core

1 dries out and then recovers to about two-third core
2 height, the ESBWR, this is the middle of the level
3 about 1 meter above the core.
4 So loss to that weight and then recovers
5 from there. So instead of steady, this is, you know,
6 steady state from the previous. This is the minimum
7 level for the ESBWR.
8 Kind of getting back to the question that,
9 you know, why are the squib valves in all of the
10 scenarios? You have to go through the GDCS in all of
11 the sequences in some manner to get to core damage.
12 And if GDCS was working, that's the worst case the
13 level can get to. It can't be any worse than that.
14 It's only if the GDCS fails that you would ever even
15 have a possibility of uncovering the core. So that's
16 why it shows up in just about all of the cutsets.
17 Early on I showed the schematic of the
18 containment from the side. This is looking down at
19 the top of the containment. We have isolation
20 condensers four and passive containment cool system
21 heat exchangers, six of those, separated on either
22 side of the building. The significance of the blue
23 water, the light blue water is that that's demobilized
24 water. It is clean.
25 We expect over the life of the plant for

1 these isolation condensers to actuate, at some point,
2 and when they do, they will blow water here and it
3 goes out the side of the building. So we would prefer
4 in those scenarios that non-radioactive steam be
5 coming out of the building.
6 MEMBER SIEBER: So would we.
7 MR. WACHOWIAK: Yes. Now, the water that
8 is in the light blue area, there is enough there and
9 the design requirement is so that there is 24 hours
10 worth of decayed heat removal in those pools. Our
11 calculations actually show that it's about 40 hours
12 worth of decayed heat removal in those pools. The
13 pools are also segmented so that if there is an issue
14 with the building or something here, that only part of
15 the water would be lost.
16 So like there is check valves or some sort
17 of a device in here that would prevent loss of
18 everything on the -- if there were an issue with the
19 building. So we have that. To get to 72 hours, we do
20 require additional water. We operate with this middle
21 portion here flood, like you would see in a refueling
22 outage, except the head is closed. But that is all
23 still flooded during operation.
24 This gives us the additional water that is
25 needed to get from -- to get all the way out to 72

hours without having to bring more water into the system. And this is where we talk about RTNSS. This is going to be an important issue later on. This building may not be so clean. It's common site gray water. Because we are going to use common site water in here during outages, then the flood out would be expensive to try to clean that as much as we would need it to be, so we keep these separate.

These pools are isolated. As you will see in the PRA, these valves here are modeled to get from 24 hours out to the 72 hours to get the additional water.

MEMBER SIEBER: If you build a pipe in the drywell and you spilled all the water out of the reactor system, how much water is available to fill up around the outside of the drywell? Are you talking the core?

MR. WACHOWIAK: The design requirement is that it will fill above the top of the core.

MEMBER SIEBER: Okay. On the outside?

MR. WACHOWIAK: On the outside.

MEMBER SIEBER: Okay. Not inside?

MR. WACHOWIAK: Yes. Actually, we emptied all three GDCS pools.

MEMBER SIEBER: Right.

1 MR. WACHOWIAK: It goes higher than that.

2 MEMBER SIEBER: Okay. Thank you.

3 PARTICIPANT: You're talking about

4 flooding during the day, right?

5 MR. WACHOWIAK: Yes.

6 MEMBER SIEBER: Yes, that's the ultimate.

7 CHAIRMAN APOSTOLAKIS: As long as there

8 are hatches.

9 MR. WACHOWIAK: This area here is deluge

10 fuel lines used during refueling and we don't take any

11 credit for that in PRA, at this time, they are not

12 connected. Well, after the compliment as nice slides,

13 I'm not sure what happened with this one.

14 MEMBER SIEBER: You would like to withdraw

15 this slide?

16 MR. WACHOWIAK: It has a paste or

17 something was on that slide that I didn't know.

18 MEMBER SIEBER: That happens frequently.

19 CHAIRMAN APOSTOLAKIS: This is an

20 interesting slide. It's very good. I couldn't find

21 anything anywhere as an example of moving from one

22 column to the other. For example, when you started

23 with the conceptual design and then you went to your

24 design base, what did you do? I mean, how do you stop

25 the conceptual design? Do you say this will be seen

1 in the PRA and ESBWR and here are some conceptual
2 changes and you do some preliminary calculation? Can
3 you describe a little bit the process?
4 MR. WACHOWIAK: Okay. In the conceptual
5 design phase, parts of the systems were like we would
6 say that this is going to be like what's in the ABWR.
7 And we would go and pull it from the ABWR, different
8 reliability studies, some of it even up until now has
9 been retained like the SCRAM system. It is exactly
10 the same as what is in the ABWR. The control rod, the
11 mechanisms, they are all the same.
12 So up through this point, we have said
13 it's ultimately going to be just as reliable as ABWR.
14 If that wasn't okay, then for some reason we would,
15 you know, have a preliminary type calculation, we
16 would think we needed to have some better protection
17 there, then we could go back and add a design
18 requirement.
19 CHAIRMAN APOSTOLAKIS: What kind of
20 criteria did you use to decide this new type of
21 protection, for example?
22 MR. WACHOWIAK: What we did was we looked
23 at existing plants. One of the hard spots would be
24 existing plants. Now, we didn't want to have any
25 issue with Atlas in the ESBWR. So from the outset in

1 the conceptual phase, we said that we want to make
2 sure that the combination of the control rods and the
3 standby LOCA control system is reliable enough that
4 all of those sequences for those things together would
5 be negligible. You know, very low 10^{-9}, $^{-10}$ type range.
6 We wanted it to be very low.
7 So we looked at the ABWR control line
8 system, that looked good. We didn't need to do
9 anything there. We looked at our standby liquid
10 control system, the conceptual design core valve, the
11 designers had a concept of this pressurized tank
12 standby liquid control system that has some valves
13 that need to open and allow the sodium pentaborate
14 solution to go into the core.
15 We looked at what they were planning on
16 doing and noticed that in their design specification,
17 they didn't really say much about instrumentation on
18 locked valves. So we kind of looked at in existing
19 PRAs if you have a locked valve that really isn't
20 tested at all during an operation, what type of
21 reliability would you put on that along with
22 availability of that train. And then without you
23 wanting any PRA models or anything, just combine those
24 terms. Does it make the reliability that we want?
25 And the answer was no, not really.

1 So we would go back to the design and say
2 here is a list of some valves that we think need to be
3 added to your instrument alarm or not just locked open
4 valves. They also need to be monitored valves, so we
5 would add that. And so in the conceptual phase, those
6 were the kind of things that we're looking at.
7 We would also have different types of
8 meetings where we would discuss tradeoffs in the
9 design. One of the places we were deciding how many
10 safety relief valves to put in the plant. Now, this
11 was a long time ago and it was probably before the
12 core power level in the plant was established, but we
13 were trying to say where should we be with that.
14 And so just from what I had done before in
15 previous PRAs, I said, you know, we would like to have
16 not just a single redundancy. We would like to have
17 more than single redundancy there. Why don't you get
18 us triple redundancy on your SRDs. And so that was
19 factored in. We had space for it and we put in that
20 number of SRDs.
21 CHAIRMAN APOSTOLAKIS: The PRA that we
22 have now corresponds to which column?
23 MR. WACHOWIAK: Right about there.
24 CHAIRMAN APOSTOLAKIS: So two columns?
25 MR. WACHOWIAK: Yes, some of it.

1 CHAIRMAN APOSTOLAKIS: Oh, that's why we
2 have a zero.
3 MR. WACHOWIAK: Some of it makes it into
4 the more detailed phase. Some of it still is in the
5 basic design phase. So actually in what you have
6 right now, the I&C system is still actually in the
7 white box all the way on the side.
8 CHAIRMAN APOSTOLAKIS: Okay.
9 MEMBER SIEBER: That was my understanding.
10 MR. WACHOWIAK: And we'll talk about that
11 a little bit more sometime today, but the --
12 MEMBER SIEBER: Yes, you need to explain
13 to me how you got from a description in the DCD to
14 some kind of hardware, because the middle reason, you
15 listed a bunch of codes and standards and reg guides
16 and things like that which sort of, you know, box
17 around what the system will be. I had a hard time
18 translating the DCD into the PRA document.
19 CHAIRMAN APOSTOLAKIS: Are you going to
20 address this later, Rick?
21 MR. WACHOWIAK: Yes.
22 CHAIRMAN APOSTOLAKIS: Yes?
23 MR. WACHOWIAK: I will. I understand your
24 difficulty in finding that.
25 MEMBER SIEBER: Yes.

1 MR. WACHOWIAK: Because as we'll talk
2 about later, where the Revision 1 of PRA was put
3 together --
4 MEMBER SIEBER: Right.
5 MR. WACHOWIAK: -- the specifics of the
6 I&C system were still in the conceptual design phase.
7 MEMBER SIEBER: Well, how do you know?
8 Rev 1 and the DCD which, you know, it has got a lot of
9 words, but not a lot of detail.
10 MR. WACHOWIAK: Right.
11 MEMBER SIEBER: Okay.
12 MR. WACHOWIAK: And that is indicative
13 of --
14 MEMBER SIEBER: And Rev 1 is the PRA.
15 MR. WACHOWIAK: And that is indicative of
16 the vision of the DAC on the I&C system at that point
17 in time. The vision of what that DAC is is different
18 now and it has more design detail in it and we're
19 going to talk about it a little bit later. We'll see
20 as --
21 MEMBER SIEBER: Well, what we're mainly
22 interested in hearing about later on is how you
23 reached a conclusion without all of the details that
24 you should have had. Okay?
25 MR. WACHOWIAK: Okay. And this is

1 probably a better time to talk about how we reached
2 our conclusion in Revision 1 without having the
3 detail.
4 MEMBER SIEBER: Yes.
5 MR. WACHOWIAK: One, it would be very nice
6 to have the detail.
7 MEMBER SIEBER: Yes.
8 MR. WACHOWIAK: It makes all of our jobs
9 easier if we have the detail.
10 MEMBER SIEBER: Right.
11 MR. WACHOWIAK: What we needed to do in
12 Revision 1 was look at the requirements that were
13 being set forth in the I&C system and then go find in
14 our other plants something that is similar and would
15 probably meet those requirements. The best we had at
16 the time was the ABWR, and so we pulled some things
17 from the ABWR.
18 What you probably know is that the ABWR
19 doesn't have the same systems as the ESBWR has, so we
20 have to make some decisions of if you were a designer
21 designing the ABWR for these standards, you come up
22 with this thing. If you're going to apply the same
23 standards to ESBWR, you would get something that is
24 similar, but slightly different, and that's what we
25 have to do. We have to make those judgments and try

1 to --

2 MEMBER SIEBER: Without adding to much to

3 this, right, I once looked and I could take that block

4 of standards that you have listed in the DCD and come

5 up with maybe 10 different systems that would meet the

6 standard.

7 MR. WACHOWIAK: Absolutely.

8 MEMBER SIEBER: Some of which would be

9 bare bones, cheap preferred, and things like the three

10 Ds, we would just barely meet them, or I could come up

11 with Cadillac systems with hardwire protection and

12 multi-processors that were separate and independent

13 and diversified and all that. You would need an

14 expensive system, but it would really give me good

15 reliability numbers.

16 And right now I can't tell where it is you

17 would end up, if you end up with el cheapo or would

18 you end up with pretty good or, you know, because the

19 standards don't go into a single system.

20 MR. WACHOWIAK: Right.

21 MEMBER SIEBER: They don't. It says

22 here's the box you can play in.

23 MR. WACHOWIAK: That is absolutely right

24 and that was the difficulty we had in this stage --

25 MEMBER SIEBER: Okay.

1 MR. WACHOWIAK: -- of being so far to the
2 left on this diagram, because we could end up with
3 different things.
4 VICE CHAIRMAN SHACK: But don't your
5 designers now have some incentive to come up with a
6 system that meets your expectations?
7 MEMBER SIEBER: And they also have
8 incentives to come up with something cheap, because
9 they have got to sell these plants. Okay. So there's
10 the conflict.
11 MR. WACHOWIAK: Yes, they want -- there is
12 a third conflict, too, in that they have to have
13 something that is qualifiable within the time frame
14 that we have. So there is a lot of different give and
15 take on all of this.
16 So what we did here, we started out with
17 what we thought was bare bones, just take the basic
18 concept from one rhythm, which is an ABWR design, put
19 it in here, one model, see where our problems are.
20 One thing that we did notice in this process, it came
21 at us from several directions, the PRA being one of
22 them, when we look at the common mode failure and the
23 digital I&C systems, we were seeing terms in the model
24 that were -- or maybe the answer is that we're showing
25 that to have some importance.

1 So we suggested something diverse. Others
2 from different -- for different purposes were
3 suggesting something diverse. I'll turn that off.
4 That's mine in there. Just go ahead and shut it off.
5 MEMBER SIEBER: Just hit it with a hammer.
6 MR. WACHOWIAK: Okay. It will stop in a
7 second. It will ring about six times. So we were
8 aware of that. And so we wanted to apply what we knew
9 was going to be the diverse protection system in the
10 PRA before we had the study done just the digital
11 where actually the diverse protection system needed to
12 be connected.
13 Well, we were part of the study and we
14 were helping to look at that, but how do you do that
15 in the model without over-committing the plant on this
16 and still providing what we need with our model? So
17 I think we only connected the diverse protection
18 system in the PRA to a couple of functions. I know
19 the depressurization valves are connected,
20 depressurization system is connected there. I don't
21 think we even connected it to the GDCS.
22 So we went bare bones with the adding the
23 DPS. Now we know which place it's connected and we'll
24 talk about this this afternoon, which places it's
25 connected to, and that will go in there. So as we get

more of the detail design, we will be able to update the PRA in -- to more detail and take things to a level where our insights become more results rather than direction to help the designers to maybe change some things.

MEMBER SIEBER: And when you add the details into the PRA and come up with a new revision, do you expect them to be surrogate goals to change and then if so, in which direction?

MR. WACHOWIAK: We'll talk about that in the next thing. There are some competing things here.

MEMBER SIEBER: Yes.

MR. WACHOWIAK: We have got some design changes that are making the plant better, so we would go in the -- one of the core damage direction, but there are some concerns with some uncertainty with things like common cause and other things that could--

MEMBER SIEBER: Raise it.

MR. WACHOWIAK: -- raise it back the other direction.

MEMBER SIEBER: You'll deal with that.

MR. WACHOWIAK: So there is going to be a balance.

MEMBER SIEBER: Okay. Thank you.

MR. WACHOWIAK: I guess my last point on

1 this slide was that recognize here that this is going
2 to be an evolutionary process and it's going to go
3 throughout the construction, you know, design
4 construction and test, initial testing of the plant.
5 We're going to continue to update our models. The
6 people who are going to operate the plant are going to
7 need to have PRA for doing things that plants do like
8 maintenance renewal and MSPI and all sorts of things.
9 So it's not a static one time shot to look
10 at this. We'll continue throughout, but the DCD and
11 the COL phase does end and we will be treating the PRA
12 differently as we have done in those other phases.
13 CHAIRMAN APOSTOLAKIS: There will be a PRA
14 at the construction phase, right?
15 MR. WACHOWIAK: Yes.
16 CHAIRMAN APOSTOLAKIS: An updated one.
17 Who do that PRA? You or the utility, the applicant of
18 the license? Do you do the PRA?
19 MR. WACHOWIAK: That is -- ultimately,
20 that is a commercial decision of who will do that.
21 Our discussions that we have had in the Design Set
22 Working Group up through this point would lead me to
23 believe that we'll do it.
24 CHAIRMAN APOSTOLAKIS: Oh, you'll do it?
25 MR. WACHOWIAK: However, we still are

1 early in all this and that is a commercial decision,
2 so that could change, but the plan right now is that
3 we would do it.
4 CHAIRMAN APOSTOLAKIS: So at which -- but
5 the utility will be involved, I hope?
6 MR. WACHOWIAK: Oh, of course. They are
7 involved now.
8 CHAIRMAN APOSTOLAKIS: Because they will
9 be the users.
10 MR. WACHOWIAK: Yes.
11 CHAIRMAN APOSTOLAKIS: They are involved
12 now?
13 MR. WACHOWIAK: They are involved now.
14 CHAIRMAN APOSTOLAKIS: Oh.
15 MEMBER SIEBER: I would have suspected
16 that the design certification phase usually is
17 responsible for the PRA.
18 MR. WACHOWIAK: Well, yes.
19 MEMBER SIEBER: And then when you sell a
20 plant, then you take the PRA from the design
21 certification and enhance it to account for site-
22 specific.
23 CHAIRMAN APOSTOLAKIS: Yes, but the
24 question is who is going to do that?
25 MEMBER SIEBER: I would think the utility.

1 CHAIRMAN APOSTOLAKIS: I would think so,
2 too, but --
3 MEMBER MAYNARD: I would say the utility
4 would be responsible for it, but whether they actually
5 do it in-house or contract it out --
6 MEMBER SIEBER: You have still got it
7 wrong. The utility would pay for it.
8 MEMBER MAYNARD: Yes.
9 CHAIRMAN APOSTOLAKIS: For the plant to
10 submit it to the Agency? For the COLA phase?
11 MR. WACHOWIAK: For the COLA phase, the
12 plan right now is -- we know this part of the plan, is
13 that GE is doing the site-specific PRAs for the two
14 applicants that we have identified right now. Okay?
15 The plan right now -- okay, so that is known.
16 The plan up through last week or whatever
17 this -- I think it was last week when there were
18 rumblings about the changes to Part 52 happened, the
19 plan was that that would be submitted along with the
20 COLA. I don't know what is going to happen at this
21 point now, because it sounds like --
22 MEMBER SIEBER: Well, we're trying to get
23 at it here.
24 MR. WACHOWIAK: Okay. Well --
25 CHAIRMAN APOSTOLAKIS: Boy, you are really

1 up to date, aren't you.

2 MR. WACHOWIAK: Yes. There are unknown

3 ramifications of changing Part 52 that I don't know

4 that I know enough about right now to have a decision

5 on --

6 CHAIRMAN APOSTOLAKIS: Okay.

7 MR. WACHOWIAK: -- what we should do, but

8 up through that change last week, the plan was to

9 submit the site-specific PRAs.

10 CHAIRMAN APOSTOLAKIS: Very good. So

11 let's move on, because of time.

12 MR. WACHOWIAK: Okay. That will get into

13 some background on our PRA. The scope that we have is

14 in internal events. For internal events full power,

15 we have everything covered, Level 1, 2 and a Level 3

16 that uses a bounding environment for the plant to be

17 in. That environment was defined in the URD and we

18 have tweaked it some to match things that have changed

19 since then. I think it's bounding.

20 For shutdown we would have a Level 1 and

21 a very simplified Level 2, mainly because most of

22 shutdown doesn't take credit for containment and it's

23 open.

24 MEMBER SIEBER: For the sequences either.

25 MR. WACHOWIAK: What's that?

1 MEMBER SIEBER: The sequences are sort of
2 frivolous.
3 MR. WACHOWIAK: They are fairly simple
4 sequences.
5 MEMBER SIEBER: Yes.
6 MR. WACHOWIAK: So it's a simplified level
7 to -- for external events or what have traditionally
8 been called external events, for fires we have a
9 bounding analysis that we have done. In Rev 1 it
10 contains a Level 1 and it contains a Level 1 shutdown
11 analysis.
12 CHAIRMAN APOSTOLAKIS: But, I mean, for
13 fires and updates you did really bounding analysis,
14 because analysis is also bounding.
15 MR. WACHOWIAK: Yes.
16 CHAIRMAN APOSTOLAKIS: I'm wondering why.
17 I mean, wouldn't be useful ultimately for the utility
18 to have a DK PRA for these events, too? I mean, is it
19 that much cheaper to make it -- to do the bounding
20 analysis that it's not only you, but it seems like --
21 or because of this?
22 MR. WACHOWIAK: Because of this.
23 CHAIRMAN APOSTOLAKIS: That you -- that
24 the COLA phase would be detailed or --
25 MR. WACHOWIAK: No. The -- what we're

1 finding is to do a detailed fire PMA --

2 CHAIRMAN APOSTOLAKIS: Why you need to --

3 MR. WACHOWIAK: -- you need to know

4 certain things like where are all the cables.

5 CHAIRMAN APOSTOLAKIS: Right, right.

6 MR. WACHOWIAK: And where are the

7 cabinets.

8 MEMBER SIEBER: How big the room is.

9 MR. WACHOWIAK: How big is the room.

10 CHAIRMAN APOSTOLAKIS: But the boundaries

11 to actually do a detailed PRA when you have this

12 information?

13 MR. WACHOWIAK: For -- our plan is to do

14 that for the utilities, to have that information.

15 CHAIRMAN APOSTOLAKIS: Right, that's what

16 I'm saying.

17 MR. WACHOWIAK: It's not necessarily part

18 of the COLA.

19 CHAIRMAN APOSTOLAKIS: I see. Okay.

20 MR. WACHOWIAK: But also likely will

21 happen after the COLA and what we're going to need to

22 see is we're going to need to do walk-downs and we're

23 going to need to go and see how those things are.

24 Now, as we move forward, we can get better and better,

25 have an idea of some of those things. But, once

1 again, we'll probably talk about this in the I&C, some
2 a little bit more.
3 There are other tradeoffs once you get
4 into that construction that no longer are how -- only
5 how cheap is it and how reliable is it, but we have
6 other things like environmental factors and how dense
7 can it be, you know? You have to worry about heat
8 loadings. Then you also have to worry about radiation
9 zones and you have to worry about other walls and
10 things to go through.
11 So it's -- to do the fire PRA the way that
12 people are now starting to do them for the plants like
13 with the NFPA in '05 and things like that, you have to
14 have much more detail on where things are spatially
15 than what we have now.
16 So what I would also say is that if we
17 knew all that, it would be easier to do the fire PRA.
18 The bounding isn't necessarily cheaper, because
19 sometimes you get into a lot of discussions about
20 assumptions and whether that assumption is valid. And
21 then if you make an assumption, how do you translate
22 that into a design, things like that. And I think
23 once we have the layout of all the electrical systems,
24 so that we could do the detailed fire PRA, it would be
25 much easier for us.

1 CHAIRMAN APOSTOLAKIS: Do you happen to
2 know whether the two utilities that you mentioned
3 earlier that are interested in this are planning to go
4 NFPA for fire, if you know?
5 MR. WACHOWIAK: No, I don't know that.
6 CHAIRMAN APOSTOLAKIS: Okay.
7 MR. WACHOWIAK: What I was thinking was is
8 how is the applicability of that to the new plant.
9 I'm just not aware.
10 CHAIRMAN APOSTOLAKIS: Okay. That's fine.
11 MEMBER SIEBER: Now, that wouldn't be as
12 important for a new plant once in the bag, because as
13 far as defining fire zones and fire areas, basically
14 do the design so that architectural features can come
15 to those things as opposed to fire wraps.
16 MR. WACHOWIAK: Right.
17 MEMBER SIEBER: And shields and reflectors
18 and stuff like that. So all the kinds of things that
19 you calculate in the fire hazard analysis should go
20 away. I mean, in certain circumstances.
21 MR. WACHOWIAK: Maybe it would. However,
22 that doesn't mean that we can't use some of this
23 information now.
24 MEMBER SIEBER: True.
25 MR. WACHOWIAK: So like when we were doing

1 our analysis for RTNSS, one of the fire zones early on
2 was causing us some problem. And the main reason was
3 a valve was in that fire zone that we didn't like
4 having coupled with other things that were in that
5 fire zone. So we asked the designer why don't you
6 move it out?
7 MEMBER SIEBER: Sure.
8 MR. WACHOWIAK: And their next round of
9 their design, they moved the valve into a different
10 fire zone.
11 CHAIRMAN APOSTOLAKIS: Okay.
12 MR. WACHOWIAK: So we can do those kinds
13 of things and still get good insights from the Fire
14 Bureau. The internal flooding is less of a bounding
15 analysis, because the impacts are straightforward.
16 We'll talk about that a little bit this afternoon.
17 MEMBER SIEBER: On the other hand, since
18 the -- a good portion of the plant is underground,
19 flooding is, you know, a possibility and to mitigate
20 flooding, you have to have an active pump to pump out,
21 right?
22 MR. WACHOWIAK: Or a lot of volume.
23 MEMBER SIEBER: Yes, significant.
24 MR. WACHOWIAK: But, yes.
25 MEMBER SIEBER: Considering the amount of

1 water that you're storing in the plant versus the
2 volume of the building site, I don't think you have a
3 lot of water.
4 MR. WACHOWIAK: We'll talk about that a
5 little later.
6 MEMBER SIEBER: Okay.
7 MR. WACHOWIAK: When was that?
8 MEMBER SIEBER: And then you raise
9 everything else up off the floor.
10 CHAIRMAN APOSTOLAKIS: Next slide, please.
11 I mean, you could talk about individual issues like
12 this, but maybe next time.
13 MR. WACHOWIAK: Okay.
14 MEMBER SIEBER: Okay.
15 MR. WACHOWIAK: We probably don't need to
16 talk a lot about this. We just wanted to say that we
17 have incorporated our knowledge from doing the PRA
18 into these aspects of the design. We continue to do
19 that in this, in our process at GE for updating the
20 plant design, things like that. The PRA is, you know,
21 a cover sheet sign off just like mechanical
22 engineering, electrical engineering, everything else.
23 It's integrated into the whole design control process.
24 One of the things that we talked about in
25 the past is how can you use the PRA at this stage. I

1 think we have talked around that quite a bit this
2 morning. We don't need to dwell on that now. We
3 don't have a perfect tool, but we have a tool that
4 does provide us some help in designing the plant.
5 Now, we get into some of the areas of why
6 the results come out the way they are. We asked about
7 the -- it was asked about the GDCS and the squib
8 valves before. In general, the way that the systems
9 are set up is we have a passive safety system. We
10 have active asset protection systems and then there's
11 various support systems.
12 And what we try to do, the target
13 configuration I call it, is that for every function
14 you have a passive way of performing that function.
15 You have an active way of performing that function.
16 The support systems, in general, are set up so that
17 the safety-related support systems support both and
18 the non -- and the diverse support systems in some
19 ways support both.
20 Now, all those areas might not be there
21 for everything, but, in general, we have that kind of
22 diverse protection on every function. And where we
23 have important sequences is when that diverse
24 protection is at the minimum and where the sequences
25 drop out is when we have more layers in that diverse

1 protection.

2 I think I know what this is, is your font

3 set on the computer here is different and it probably

4 showed up okay on your prints, right?

5 ALL: Yes.

6 PARTICIPANT: That's why you do pdf.

7 MEMBER SIEBER: It looks pretty good to

8 me.

9 MR. WACHOWIAK: We have -- this was to

10 illustrate for the different functions. Reactivity

11 control, we have several different ways of performing

12 that analysis. See though, some of these things, in

13 the first one, RPS, ARI, FMCRD really all rely on the

14 control rod, so there are some points in there in some

15 of them, but there are still two diverse means which

16 will stand by the control system, and also the FMCRD

17 that is -- it's no longer all hydraulic on the control

18 rods. There are some that are controller-driven also.

19 Pressure control. We have different ways

20 of doing that, isolation condenser, SRVs and the main

21 condenser. Inventory control, ICS, feedwater, CRD for

22 high pressure scenarios, low pressure scenarios, GDCS,

23 the Fuel and Aux Pools Cooling System and fire water.

24 Depressurization, a couple of different ways to do it.

25 We put here the DPVs in the passive side and the SRVs

in the active side.

I don't know if that's a real good split there, but there are two different ways to depressurize the plant. And then decay heat removal, PCCS and ICS are the passive means and then main condenser and reactor water cleanup in the shutdown cooling mode can also back that up.

We have also -- now, I would include the FAPCS down in that range. We have -- it didn't make it on my slide, but it should also be in there, because that can remove decay heat also.

The internal events, and we'll talk about some of these things, some of these scenarios. The loss in feedwater and loss of off-site power are the dominant contributors here. The next -- I guess after the break we'll talk about exactly why that is. The point estimate for CDF, 2.9×10^{-8}. There was some question before on the uncertainty with the skew in that curve with the mean being much different than the point estimate.

We did some investigation on that and it turns out that there were some very low order cutsets that were -- that had erroneous data in them that were driving that. When we fixed those cutsets, then the skew went away. 95th percentile still remains down in

1 the 10^{-8} sort of range.

2 CHAIRMAN APOSTOLAKIS: Well, I mean, this

3 is a calculation assuming some uncertainties.

4 MR. WACHOWIAK: Right.

5 CHAIRMAN APOSTOLAKIS: And I want to tell

6 you that's really outstanding, but that's very

7 knowledgeable on Section 11. What I found very

8 interesting is the sensitivity analysis that you did,

9 and then it seems to me that a rationale person would

10 take the totality of the calculations that you have to

11 say this is not my uncertainty in my state of

12 knowledge. You know, there is an -- 8.3×10^{-8}, is a

13 result assuming certain things.

14 MR. WACHOWIAK: Yes.

15 CHAIRMAN APOSTOLAKIS: And then some

16 uncertainty in the failure rate and so on. When you

17 do an evaluation, the focused PRA, assuming all the

18 safety systems and systems under regulatory treatment,

19 you get a number that is 6.7×10^{-6}. Okay? Admittedly,

20 you have very conservative assumptions, that no active

21 system works, but it does take you plus or minus

22 higher. So if I were to ask you what is the 95th

23 percentile in your mind, would you really stick to the

24 8.3×10^{-8}? In my mind it's higher, because of all of

25 these uncertainties and squib valve issues and so on.

For a 95th percentile to be around 10^{-6}, that is still a pretty good design, because you are talking about, you know, describable distribution, but I wonder whether -- I mean, what is it? I mean, this 8.3×10^{-8}, first of all, it's awfully close to the point estimate considering the fact that this is a new design with some assumptions and so on. It's fairly higher, but it's not 10^{-4}.

MR. WACHOWIAK: Right.

CHAIRMAN APOSTOLAKIS: Right. And --

MR. WACHOWIAK: I think --

CHAIRMAN APOSTOLAKIS: Maybe the 10^{-6} is in my mind.

MR. WACHOWIAK: I think you could make that case. There are different uncertainties that we address in different ways.

CHAIRMAN APOSTOLAKIS: Yes.

MR. WACHOWIAK: And the question that I would bring up is what are you going to use that number for?

CHAIRMAN APOSTOLAKIS: Right.

MR. WACHOWIAK: Certainly, you want to make sure that your overall uncertainty is much less than 1, but still --

CHAIRMAN APOSTOLAKIS: Well, let's say you

1 want to meet the goal.

2 MR. WACHOWIAK: You want to meet the goal,

3 including all the uncertainty. I think that would be

4 a good use of binding all those things, but the

5 question then is how do you decide, you know, what is

6 the 95th or what is the shape of that curve? I think

7 you would have to do all that qualitatively and try to

8 estimate where it is. But I would think that most of

9 our risk curve is well within the Commission's goals.

10 CHAIRMAN APOSTOLAKIS: And I would agree,

11 yes. What I'm saying is that -- well, you know, there

12 are numbers such as this in the report and that is

13 very fine or legitimate numbers, but some sort -- I

14 mean, we should start as a community talking about

15 these issues, because what we're doing here really are

16 building the safety case. This is why we do it.

17 MR. WACHOWIAK: Yes.

18 CHAIRMAN APOSTOLAKIS: But I don't think

19 anyone would say yes, the 95th percentile is 8.3×10^{-8}.

20 If you do some sensitivity analysis and in

21 some cases very conservative assumptions, you show

22 that it goes up by two orders of magnitude. This is

23 very enlightening to me, because it tells me that, you

24 know, the number is low. Now, whether the 95th

25 percentile is 10^{-6} or 3×10^{-6} or 9×10^{-7}, it is

1 irrelevant, but it's in that mode that it seems to me.

2 I would be extremely surprised if somebody

3 came up with a sequence that showed that it's $5x10^{-5}$,

4 because you have done all these analyses and I cannot

5 really think that distribution, which admittedly is

6 not the broad curve, I mean, it has a lot of

7 positives, is the result of all these calculations, it

8 seems to me. And it should be presented, you know,

9 that it's more of a qualitative/quantitative

10 evaluation that is the result of these calculations

11 plus the sensitivity analysis and so forth. I

12 wouldn't, for example, go with the $6.68x10^{-6}$ per year

13 that is the result of ignoring the active systems.

14 MR. WACHOWIAK: Right.

15 CHAIRMAN APOSTOLAKIS: That is probably

16 too high, but that tells me that the 95th percentile

17 may be, you know, a little below that or somewhere

18 there. And that will be maybe realistic to say, yes,

19 our best estimate is $3x10^{-8}$, but the 95th percentile

20 can be maybe around 10^{-6}, would be a more realistic

21 representation, I think.

22 And, again, it depends on how you want to

23 use it. The immediate use is yes, we did meet the

24 Commission's goals.

25 MEMBER KRESS: Well, the trouble with

that, George, to me is every plant that comes in for design certification with two parts will get different results from it. I think a better approach would be to assume that the goals we put together they have to meet all of this and then we're asking only that they do this part which can be done just about the same way for every plant and it can meet the goals here. Well, an exception might be that you have accounted for those uncertainties by setting goals at a certain level.

CHAIRMAN APOSTOLAKIS: Some uncertainties would follow the conditions in the staff's mind when they formulated the goals, but I'm not sure about how many was talking about active systems, for example. I mean, these are from the Agency.

MEMBER KRESS: Yes.

CHAIRMAN APOSTOLAKIS: That --

MEMBER KRESS: But we're setting new goals for new tenants now.

CHAIRMAN APOSTOLAKIS: 10^{-5}, right?

MEMBER KRESS: Um-hum.

CHAIRMAN APOSTOLAKIS: Even that argument I would say is part of bringing the safety case. The goals themselves are conservative and we also do all these analyses.

1 MEMBER KRESS: But the way --

2 CHAIRMAN APOSTOLAKIS: And then the PRA to

3 the technical community out there.

4 MEMBER KRESS: Well, with that there, you

5 know --

6 CHAIRMAN APOSTOLAKIS: These guys propose

7 a new design and they only have a factor of 3 or so

8 between their best estimate in the high profession

9 guide. That is not really the intent. And the other

10 thing is to represent that they also -- all applicants

11 are doing the other analysis, too.

12 MEMBER KRESS: The sensitivity.

13 CHAIRMAN APOSTOLAKIS: Everybody does

14 that, because the staff has the numbers, the focused

15 PRA and so on. So I think ultimately it's a

16 combination of all these things, the conservatisms in

17 the goals themselves plus all these calculations.

18 Remember, the net result is yes, we do have a pretty

19 conservative design. It meets the goals.

20 MR. WACHOWIAK: Right. And one of the --

21 you talked about one of the sensitivities that we had

22 in there where we took out the non-safety systems.

23 CHAIRMAN APOSTOLAKIS: Yes, right.

24 MR. WACHOWIAK: The next step that we

25 didn't go back in and do in the report here, as it

1 turns out we were evaluating the RTNSS things, is we
2 should have gone back in and put all the RTNSS systems
3 back in to see what that number comes out to be when
4 they are there. So there is a lot of things to do
5 with these.
6 CHAIRMAN APOSTOLAKIS: It's a bounding
7 analysis in probabilistic space.
8 MR. WACHOWIAK: Yes.
9 CHAIRMAN APOSTOLAKIS: Just as though
10 deterministic regulations apply to develop a boundary.
11 And you say now, if anything else happens, we're still
12 covered.
13 VICE CHAIRMAN SHACK: Yes. I mean, you do
14 that analysis for regulatory purposes but, I mean,
15 it's not a very realistic estimate of the 95th
16 percentile either.
17 CHAIRMAN APOSTOLAKIS: Which one? This
18 one?
19 VICE CHAIRMAN SHACK: No, the one where it
20 takes out all --
21 CHAIRMAN APOSTOLAKIS: No, no, that's what
22 I'm saying, that ultimately in your mind you have some
23 idea where it could be by looking at all these.
24 That's why I'm saying this is a safety case and you
25 don't necessarily have to say the 95th as a result of

all these is 3.2×10^{-6}. I mean, that is very hard to do, but you know it's on that order because I can't imagine anybody else doing anything more, I mean, unless of course we do creative monitoring and do something else. So the 95th percentile from this calculation.

MR. WACHOWIAK: From this calculation.

CHAIRMAN APOSTOLAKIS: Okay.

MR. WACHOWIAK: And I think that is how that is recorded in the report. I also wanted to give a breakdown of the large release frequency. Now, this pie here only includes those things that we have categorized as large release, so it's 3 percent of the CDF.

MEMBER KRESS: Now, the fact here is perhaps release. There was a certain amount of release of --

MR. WACHOWIAK: What we did for this particular analysis and what is in Revision 1 of the PRA is that if the containment did not remain intact, it was considered a large release no matter what the magnitude of the release was.

MEMBER SIEBER: So you know if it leaks.

MR. WACHOWIAK: If it's tech spec style leakage, type leakage or they are not -- so,

1 basically, if the equivalent leakage allowed by tech
2 specs -- now, that's a design pressure.
3 MEMBER SIEBER: That's not a large one.
4 MR. WACHOWIAK: That's not a large
5 release. No, we had an increased pressure, so there
6 would be some additional leakage beyond that. But if
7 it's leakage, it's not considered large release. If
8 it's -- if there is some --
9 MEMBER SIEBER: If it's beyond the tech
10 specs though, is that large or what?
11 MR. WACHOWIAK: As I said, what we did for
12 the containment was we calculated what an equivalent
13 leakage area would be for the design pressure, which
14 is how that is calculated. We didn't say that if the
15 pressure went above the design pressure, that was
16 going to be a large release, because the leakage is
17 about the --
18 MEMBER SIEBER: I understand.
19 MR. WACHOWIAK: Okay. So those are not
20 included in here. We can have a high containment
21 pressure, but as long as the boundary remains intact
22 and the operators have not had to vent the
23 containment, then it's not a large release. So we
24 even threw the filtered vent into the large release
25 for now. We're considering -- and, once again, coming

1 into these uncertainty calculations, it's possible to
2 take some percentage of the whatever leak-like family
3 and make a criteria and say above this is going to be
4 a large release.
5 What we see is in some of these like the
6 filtered vent case and in some of the -- some portion
7 of the BiMAC failure case there would be almost no
8 releases from those scenarios, basically because the
9 core itself is sitting under a 10 meter pool of water
10 and then the venting or the release path is through
11 another pool of water. We could make that case.
12 We're not ready to jump there just yet, but there is
13 a potential there.
14 MEMBER SIEBER: I'm surprised the bypass
15 is so small, 1 percent.
16 MR. WACHOWIAK: Well --
17 MEMBER SIEBER: Because that does provide
18 a lot of fluids.
19 MR. WACHOWIAK: Right. And this was
20 another thing, one of those things that we addressed
21 in the conceptual design phase. We looked at what
22 were the potential paths for a bypass from a reactor
23 outside the containment and looked at those
24 penetrations and made sure that those lines were
25 robust. In one case we added an additional isolation

1 just for that.

2 MEMBER SIEBER: Yes, the MSIVs are the

3 likely path, aren't they?

4 MR. WACHOWIAK: The --

5 MEMBER SIEBER: I mean, and so to bypass

6 the accident really, you use very tightly the

7 reliability and retighten in the MSIV.

8 MR. WACHOWIAK: That is one area. The

9 leakage of the MSIVs, that's probably something

10 additional that we could look at. That wouldn't be

11 included in here.

12 MEMBER SIEBER: Okay.

13 MR. WACHOWIAK: We looked at the closure

14 of the isolation valves, but I would have to think

15 about how leakage would factor into this. There is

16 leakage criteria during testing but, once again, we

17 would have to look at historically how these valves

18 performed outage-to-outage to see what --

19 MEMBER SIEBER: One of the big issues in

20 the testing is you need a comparison to Part 100, I

21 mean, as opposed to worse like situations.

22 MR. WACHOWIAK: Yes.

23 MEMBER SIEBER: On the other hand, a

24 degraded valve could bring you close to a Level 3.

25 MR. WACHOWIAK: That's a good point.

1 MEMBER KRESS: When Level 3 happens, which
2 we have been talking about today, creating this at the
3 site, you know, with human frequency doing something
4 other than distribution pumps, frequency would be
5 exceeded. To me that is an outcome measure of
6 whatever we're asking. Okay. It's hard to break it
7 down into various points, like you have it here.
8 MR. WACHOWIAK: Right.
9 MEMBER KRESS: To me that is a better
10 measurement than the one you have. This is sort of a
11 simplified manner you took here, when you just look at
12 containment failures, but all of that is wrapped up in
13 the frequency consequence curve.
14 MR. WACHOWIAK: Right.
15 MEMBER KRESS: That you showed.
16 MR. WACHOWIAK: Right, including the
17 leakage terms are also --
18 MEMBER KRESS: They are also in there,
19 too, right.
20 MR. WACHOWIAK: Also.
21 MEMBER KRESS: Yes.
22 MR. WACHOWIAK: It depends on what you
23 want to do with the number. I think both of those
24 analyses have their uses and if we're trying to figure
25 out what our problem areas are in the containment and

1 how do we make it better --

2 MEMBER KRESS: This is a better way to do

3 it. I think this would be a better design.

4 MR. WACHOWIAK: You know, for comparing

5 the thresholds, then the other way is --

6 MEMBER KRESS: The other way would be a

7 good comparison of the threshold.

8 MR. WACHOWIAK: A good comparison.

9 MEMBER KRESS: Very good.

10 MEMBER BONACA: For internal events, how

11 does the results compare to the ABWR? I'm not

12 familiar with that design and I'm just looking at loss

13 of power being dominant here and, of course, this is

14 according to passive systems.

15 MR. WACHOWIAK: The one -- the internal

16 events are the core damage frequency for internal

17 events reported in ABWR, around $1x10^{-7}$. I think some

18 calculations had it at $2x10^{-7}$. It's right in that

19 range, so it's about an order of magnitude different.

20 So the question I think that you would have is where

21 is the difference here for the loss of off-site power

22 cases.

23 Because, I think, and I'm going off

24 memory, I don't remember what the magnitude or what

25 the absolute portion of loss of off-site power in the

ABWR is. But I think if you look at the two, even though the contribution might be comparable, I think the ESBWR has -- everything is lower, so its contribution is --

MEMBER SIEBER: It would be an order of magnitude lower across the board.

MR. WACHOWIAK: And we'll talk a little bit about some things that we did to address that. That is later on in the presentation.

MEMBER SIEBER: Yes.

VICE CHAIRMAN SHACK: Okay. Does it come down to the reliability of the school of thought versus the reliability of thinking generally?

MR. WACHOWIAK: That's one way of looking at it.

MEMBER SIEBER: Yes. You have got 32 squib valves. Is it more reliable before they submitted it?

MEMBER BONACA: For an additional PRA, I mean, you need to run a line and some piping and you need power to do that.

MR. WACHOWIAK: In the ABWR?

MEMBER BONACA: In the ESBWR.

MR. WACHOWIAK: ESBWR? Yes, there are some things that need to be looked at. Now, one of

1 the differences, and we didn't really talk about it
2 too much in this part here, one of the other things in
3 the comparison now in the passive plants versus the
4 active plants, in the active plants things -- the PRA
5 pretty much ends at the 24 hour boundary.
6 MEMBER SIEBER: Right, right.
7 MR. WACHOWIAK: Because everything beyond
8 that is just more of the same. Where here, once
9 again, not reflected in the numbers that I just had up
10 there in the sensitivity analysis, some of those
11 things go on out farther than that and things have to
12 happen later on. So the comparison is a good one. I
13 think about that. Is it really just trading squib
14 valve reliability for diesel generator reliability?
15 Maybe that is something we may need to do.
16 MEMBER SIEBER: It's the first order.
17 MR. WACHOWIAK: It's the first order of
18 fact.
19 MEMBER SIEBER: Which one would you rather
20 have, a new diesel or a new squib valve?
21 CHAIRMAN APOSTOLAKIS: Well, hopefully I
22 won't need either one.
23 MR. WACHOWIAK: Yes. And there's
24 different tradeoffs for what you can do about
25 different things, too.

MEMBER SIEBER: At least you can use the diesel more than once.

VICE CHAIRMAN SHACK: Isolation condenser gets more than one load.

MR. WACHOWIAK: Isolation condenser is what we would rather use than anything else.

MEMBER SIEBER: Right, absolutely.

MR. WACHOWIAK: That is the tidiest system.

MEMBER SIEBER: Don't even use your code.

MR. WACHOWIAK: I have a summary slide here of some of the different things that we looked at for external events and shutdown. It comes out better on your print than it did on the screen.

MEMBER SIEBER: Um-hum.

MR. WACHOWIAK: If you just look at the fire for bounding fire analysis, you will think that, oh, you know, we may have missed something here, but I think because the numbers there are comparable to the internal events numbers or the -- yes, the internal events numbers. And the shutdown, it's even more pronounced.

I think this is an artifact of the bounding calculation that we have and that when we actually lay things out in the reactor building, and

1 we'll talk about this later on when we go into detail
2 on the fire analysis, but this is an artifact I
3 believe of our bounding analysis.
4 MEMBER KRESS: The seismic calculations?
5 MR. WACHOWIAK: It's done with seismic
6 margins is what we have and we put in a HCLPF
7 requirement for the safety systems in the plant.
8 MEMBER KRESS: Okay.
9 MR. WACHOWIAK: I think in the latest
10 revision, that went into Tier I, I think. It was
11 asked for. I'm not sure if it made it into the last
12 revision. But for those systems, that performance
13 beyond SSE is being required for the plant. Once
14 again, because we don't really know what it's going to
15 be until it's actual.
16 MEMBER KRESS: Until you have a site.
17 MR. WACHOWIAK: Well, not only until you
18 have a site, but you have got to construct, fabricate
19 and construct the things that we're relying on. And,
20 at this point, we have to make those design
21 requirements rather than actual measured values.
22 When we start getting actual measured
23 values out in the construction phase, I think that's
24 when it's going to switch over to probably more of a
25 quantitative seismic risk analysis. It's again too

1 late for the COL phase, but certainly useful for the
2 owners of the plant.
3 My conclusion for this section.
4 Basically, after we have gone through the design and
5 looked at some of the things, we think that the design
6 is robust and that there are really -- compared to
7 what we have out there now, it's very remote to have
8 a severe accident.
9 We think we have addressed many of the
10 things that have turned out to be issues in previous
11 plants and we'll continue to address those all through
12 the design and construction phase. It's a good tool
13 to use in addition to other more traditional code
14 standards, you know, methods.
15 Combination of our passive safety and
16 active non-safety systems and then diversity amongst
17 those is really what is driving this. There are some
18 questions on the data that we'll work through as we go
19 forward but, once again, I think that it's the
20 construction of the -- or the construction of the
21 plant systems that should drive the ultimate result,
22 you know, rather than relying on, you know, good
23 numbers that have been based on numbers, do more
24 uncertainty analyses and ensure some of those things
25 and still be able to come well within the goals.

1 That's what I had for this particular
2 part. I don't know if you guys wanted to take a break
3 now or whatever and I will bring up the next one. The
4 next set of information, basically we're going to go
5 through some of the sequences, the top sequences in
6 the plant.
7 CHAIRMAN APOSTOLAKIS: Yes, we'll be back
8 at 10:25.
9 (Whereupon, at 10:05 a.m. a recess until
10 10:26 a.m.)
11 CHAIRMAN APOSTOLAKIS: Okay. We are back
12 in session and Rick will tell us about the update of
13 the PRA.
14 MR. WACHOWIAK: Okay. This next section
15 and I was trying to figure out how to put this into
16 the presentation form and I just -- when we're going
17 to talk about sequences, it doesn't -- you just never
18 know where it's going to go, so what I did was I
19 grabbed the sections out of the PRA, the top
20 sequences. I have some discussion that I want to have
21 on the top one, which really will -- could go there,
22 and then if we want to get further into other
23 sequences, I have some other entries and things here
24 we could talk about, too.
25 So start with the one handout that looks

1 kind of like this and it's this thing up here. If we
2 go through the list of the top sequences, what we --
3 the first one is a loss of off-site power sequence.
4 We have been asked why is it called loss of preferred
5 power. I think that is a holdover from ABWR stuff.
6 That is just what we have always called it, but it's
7 what you would traditionally think of as a loss of
8 off-site power.
9 This one sequence here contributes a
10 little over half of the CDF. The event tree that is
11 associated with that should be one of the large ones
12 that you have there that is very difficult to read.
13 PARTICIPANT: This is actually -- yes.
14 MR. WACHOWIAK: You have the one that has
15 got very small letters on it?
16 CHAIRMAN APOSTOLAKIS: Right.
17 MR. WACHOWIAK: And in your package, I
18 have got something that is a more simplified version
19 that we will actually get into.
20 VICE CHAIRMAN SHACK: We actually don't
21 have that.
22 MR. WACHOWIAK: You don't have loss of
23 off-site power? Do you have a loss of feedwater.
24 VICE CHAIRMAN SHACK: We have loss of
25 feedwater.

1 MR. WACHOWIAK: Okay. Loss of feedwater
2 is exactly the same structure as loss of off-site
3 power.
4 MEMBER SIEBER: I can't read it. It
5 doesn't make any difference.
6 MR. WACHOWIAK: But I got a simplified
7 version for you in the package.
8 PARTICIPANT: If you can read, right?
9 MR. WACHOWIAK: Right.
10 PARTICIPANT: That's the general trends.
11 MEMBER SIEBER: General trends, right.
12 Well, I can't read it.
13 MR. WACHOWIAK: So --
14 VICE CHAIRMAN SHACK: Just a quick
15 question on this one. Suppose even though I have a
16 SCRAM I file off the liquid ejection system, do I get
17 enough water in there that I don't need to
18 depressurize and I can right on my isolation
19 condenser?
20 MR. WACHOWIAK: If you get standby liquid
21 controlling?
22 VICE CHAIRMAN SHACK: Right, yes.
23 MR. WACHOWIAK: Yes. In this particular--
24 in one of these cases.
25 VICE CHAIRMAN SHACK: Is that one of the

1 success sequences for this thing or you don't count
2 that?
3 MR. WACHOWIAK: That wouldn't be on this
4 particular tree. That is -- on the bottom of those
5 pictures you see where it says transfer to AT-TWOP at
6 the bottom, bottom right hand corner?
7 VICE CHAIRMAN SHACK: Got it.
8 MR. WACHOWIAK: That would be on a
9 separate page. That was an entry that we would
10 transfer to. But in that case, you would have this
11 loss of power and the SCRAM fails.
12 VICE CHAIRMAN SHACK: But even if the
13 SCRAM is successful, I want to say that you're
14 ripening up my isolation condensers here. I want to
15 save the isolation condensers and dump them into water
16 from the standby liquid control.
17 MR. WACHOWIAK: Okay. No, that is not
18 sufficient from the standby liquid.
19 VICE CHAIRMAN SHACK: It's not sufficient?
20 MR. WACHOWIAK: We looked at that. Water
21 from standby liquid control is not sufficient to
22 prevent depressurization and that is the important
23 part here, is that we do have -- in this scenario we
24 have a water level drop and it goes below Level 1.5.
25 Now, when the water level is below 1.5, a

1 timer starts, because what we're trying to do is we're
2 trying to detect if there is a LOCA or not.
3 So I'll jump ahead of myself here, because
4 we'll cover this in a little more detail and you don't
5 have the handouts just yet for it, but the water level
6 comes down and what we have to do in setting the
7 actual setpoints on the instruments, including the
8 uncertainty on the instruments using our GE setpoint
9 methodology and the uncertainty associated with the
10 equipment that we had for level measurement, the 101
11 setting needed to be higher than what we wanted it to
12 be to account for uncertainty in the measurement.
13 And where it needed to be is what we call
14 here the Level 1.5. If there is a small LOCA, you
15 would have some time, but you really have to open the
16 -- start the depressurization sequence more around the
17 Level 1.5 range. So for the LOCA detection we did two
18 things. One, if you have below Level 1.5, we check
19 then to see if there is high drywell pressure. If
20 there is high drywell pressure concurrent with this
21 Level 1.5, you assume there is a LOCA. The LOCA
22 sequence starts.
23 If there is no high drywell pressure
24 though, we're still not 100 percent sure that it's not
25 a LOCA because there are other things. If it's a

1 smaller LOCA, it could be holding the drywell pressure
2 down. So the calculation that was done on the design,
3 in the design basis side, was that if we had about 15
4 minutes before we have to start the sequence in these
5 very small LOCAs, then what we'll do is we'll put in
6 a 15 minute timer, essentially, nominal 15 minute
7 timer.
8 So we get to Level 1.5 and there is no
9 high drywell pressure, but we start a 15 minute timer.
10 If water is not recovered above Level 1.5 by the end
11 of that timer, then we'll go into the LOCA sequence.
12 What it takes to get there though is it takes two CRD
13 pumps running full blast to get back to the Level 1.5
14 within the time frame.
15 MEMBER ABDEL-KHALIK: I have a question
16 about that. What you call now Level 1.5 is Level 1 in
17 your report. When you get down to Level 1, the
18 gravity-driven system is actuated. There is 150
19 second time limit for cooling and a short-term cooling
20 and then there is a 30 minute time limit for the long-
21 term cooling, equalizing lines to be opened.
22 Now, there is also the possibility that
23 the operator could initiate the system and,
24 presumably, the operator will initiate this system if
25 the conditions exist that would have called for the

1 system to be automatically actuated and for some
2 reason the system was not, which means that the
3 operator would initiate this system sometime after it
4 would have been called for automatically.
5 And when that happens, when the operator
6 initiates this system, the short term valves are
7 opened at the time the operator calls for them and
8 without the 150 second waiting period. However, the
9 long-term valves still go through the 30 minute
10 draining period, which means that that long-term
11 equalizing line which normally would be open 30
12 minutes after reaching Level 1 will now be open much
13 later than that by the time between what it would have
14 been called for and the time the operator realizes
15 that the system had not been actuated.
16 MR. WACHOWIAK: That's not exactly how it
17 works.
18 MEMBER ABDEL-KHALIK: Do you understand
19 that logic?
20 MR. WACHOWIAK: That's not exactly how it
21 works. When you start with the equalizing line and
22 the GDCS injection, the 30 minute timer starts on the
23 ECCS signal, but -- and that is a 30 minute
24 permissive.
25 MEMBER ABDEL-KHALIK: Okay.

1 MR. WACHOWIAK: You also have to have
2 another signal before the valve will open. It has to
3 be Level 1.5.
4 MEMBER ABDEL-KHALIK: Right.
5 MR. WACHOWIAK: There are no sequences in
6 the design basis accidents where the level gets down
7 that far.
8 MEMBER ABDEL-KHALIK: So the equalizing
9 lines are never open?
10 MR. WACHOWIAK: In the design basis
11 accidents. So if you go into the rest of the DCD like
12 in Chapter 6, the equalizing line is never called to
13 open, because the water level has already recovered
14 back above, well above Level 1, before the 30 minute
15 timer expires.
16 MS. CUBBAGE: That would change though in
17 that period through the excursions of the DCD? That
18 might be something we can do?
19 MR. WACHOWIAK: I don't think so. In the
20 design basis, they have never challenged the
21 equalizing lines at all.
22 MS. CUBBAGE: Isn't it the application?
23 MR. WACHOWIAK: Maybe in preapplications
24 they were there. They said it was for long-term
25 cooling and it would be open very late. So the

1 operators, if they go to initiate this signal, the
2 first thing that I would say about this is that the
3 human factors analysis, the man-machine interface
4 process that is an ongoing thing, hasn't necessarily
5 specified yet how the operators are going to do this.
6 Will they do it by initiating the sequence or will
7 they do it by initiating each valve individually?
8 There is good things and bad things about
9 either one of those scenarios. You know, so there is
10 a process that's going on to determine how they would
11 go about doing it.
12 I'm trying to remember in the PRA, I
13 think, we had those as separate actions associated
14 with actuating the valves individually. So there is
15 different ways, but I'm not sure that that's the way
16 they are going with the actual design of that manual
17 actuation.
18 So in the PRA now, the GDCS system is
19 assumed to operate, but we have also said now that we
20 are going to require that the equalizing line be
21 operable in order for the GDCS system to work. So
22 it's an assumption that we have and if the GDCS takes
23 themselves inject, we still don't show that the
24 equalizing lines would have to open with any of our
25 success criteria calculations, but we do know that

1 there are things going on.

2 There is containment leakage where we

3 could be losing some inventory and very, very late out

4 into a sequence, it's possible that those valves would

5 need to open. So as a conservatism, we put that

6 requirement in the GDCS top for some of the scenarios.

7 In particular, we said that if only one GDCS tank

8 injects, where the design basis calculation assumed

9 two of them did, we said if only one of them did, then

10 for sure that is going to be required to open. But I

11 think it's in all of the scenarios that -- not all of

12 them. In most of the scenarios, we assume that some

13 time late in the accident, those equalizing line

14 valves would open.

15 MEMBER ABDEL-KHALIK: So the only scenario

16 under which the level would drop below Level 1.5 would

17 be if you're losing water outside the containment?

18 MR. WACHOWIAK: Yes.

19 MEMBER SIEBER: And the control.

20 MR. WACHOWIAK: So you have to have Level

21 1.5 --

22 MEMBER ABDEL-KHALIK: Right.

23 MR. WACHOWIAK: -- before the equalizing

24 lines would open. And in almost all cases, the water

25 level is back above that and there has got to be some

1 long-term boil-off before you would get down to that
2 level. Now, if you remember from some of the sketches
3 we had in the last presentation, where the water is
4 boiling out of the core, it goes out through the DPVs
5 into the containment. Then from the containment is
6 where the passive cooling heat exchanger takes its
7 intake from, so the steam would go into there,
8 condense in the passive containment cooling heat
9 exchanger and then it goes back into the GDCS pools,
10 which then provides the path back to the reactor.
11 At the preapplication stage, there was a
12 slightly different configuration where the suppression
13 pool and the GDCS pools were configured differently
14 and it's possible that whether it was in that other
15 configuration that the equalizing lines would open
16 under more of the scenarios. But in our case, you
17 know, it's just a little bit of bleed off gas that's
18 going to the suppression pool. And when we have done
19 the TRACG analyses, it would be way, way, way past
20 three days, probably into the, you know, several more
21 day phase before those things would open if at all.
22 MEMBER SIEBER: You mean long-term?
23 MR. WACHOWIAK: Yes. It's long-term. But
24 now, if we don't have full injection from the GDCS,
25 maybe it will open sooner, that's why we put that in

1 the PRA. In the next level, the PRA will be looking
2 at that particular part of the success criteria and
3 probably split those out and show which sequences the
4 equalizing lines will challenge and which ones were
5 not needed and do that explicitly rather than bound up
6 in the top logic.
7 We think it's easier to explain, even
8 though it, you know, makes the calculation more
9 convenient if it's in the top logic, but I think it's
10 easier to explain if we have that separate.
11 MEMBER ABDEL-KHALIK: So the long-term
12 success criteria of having even one sort of line open
13 between the suppression pool and the vessel, doesn't
14 come from a mechanistic calculation that you would
15 need 600 gallons per minute after half an hour to do
16 the job?
17 MR. WACHOWIAK: No, it's from --
18 MEMBER ABDEL-KHALIK: It's just --
19 MR. WACHOWIAK: It's very much later and,
20 you know, at 72 hours that that's when it opened and
21 you can see that it opens later than that. But if it
22 opened at 72 hours, you would need I guess 200 gpm to
23 deal with that. So we did run those cases in MAAP and
24 showed that the one line was going to work for us. So
25 it's not just pulled out of the air. We have some

basis for it, but it's not a detailed calculation.

MEMBER MAYNARD: I've got a couple of questions of third power. The distribution panel, you know, with mature heads, your electric system is not safety-related.

MR. WACHOWIAK: Yes, that's correct.

MEMBER MAYNARD: Okay. And I wonder where your numbers are coming from as far as reliability for diesel generators and some of your other equipment. Is it based on data from equipment being maintained and dumped into frequent data or how did you get into the substance for that?

MR. WACHOWIAK: Yes, the data comes from existing power plant diesel generators. So once again, there is a trade off here. They aren't safety-related diesel generators, so the testing may be somewhat different. However, the requirements are also quite different. In this particular scenario here, in one of the DCD where they did the calculation for this scenario where the two CRD pumps are the level in the reactor, the diesel generators don't need to start for two minutes.

MEMBER MAYNARD: And I understand all of that. I find it more important the treatment of the equipment system, but it's more in the equipment

1 itself on that thing. It's different. It's really
2 more how it's maintained and tested and treated. So
3 I think how we're going to be treating some of these
4 non-safety systems from regulatory states to make sure
5 that they are going to still be consistent with the
6 PRA or from an analysis standpoint.
7 MR. WACHOWIAK: This is a little bit
8 beyond the scope of what we are talking about here,
9 but there are three programs that all address it.
10 There is the RTNSS, which is one way, and in the RTNSS
11 program, if one of these things is determined to need
12 to have availability controls, which in the end I
13 think we ended up there, at least in our current
14 configuration of the plant, then that's where certain
15 types of testing and not really surveillances, but
16 certain types of testing would be specified.
17 It would be like in the Technical
18 Requirements Manual they would be there. If we don't
19 have -- and then also, we would specify availability
20 targets at that point too then.
21 MEMBER ABDEL-KHALIK: And that's the --
22 MR. WACHOWIAK: And there is the design
23 reliability assurance program, which comes under the
24 QA portion of the COL, which calls for us to identify
25 important pieces of equipment. And I think in Rev 1

1 the diesel generators fell into that category. And
2 with that, we would be required for our quality
3 assurance program to specify what the availability and
4 reliability assumptions were in the PRA and those
5 would need to be maintained by the plant.
6 And then the third program that addresses
7 this same thing is the Maintenance Rule. And if these
8 diesel generators meet Maintenance Rule criteria for
9 requiring availability reliability and they do, at
10 least at this point, in the calculation, then those
11 things would be monitored under the Maintenance Rule
12 program.
13 MEMBER MAYNARD: I agree. I think the
14 Maintenance Rule is good from there. Along kind of
15 the same lines, per your assumptions, you assume that
16 there was no preventive maintenance being done on the
17 equipment, some corrective action on maintenance, but
18 no provision maintenance. However, the current
19 philosophy right now is they do online PMs. And I'm
20 just kind of wondering from your PRA, the assumption
21 is availability and everything, why you are assuming
22 that there is no preventive maintenance being done on
23 any of the equipment.
24 MEMBER SIEBER: During outages.
25 MR. WACHOWIAK: That was a first cut in

1 our assumptions. The customers, as I said earlier,
2 they are involved in looking at some of this. And in
3 some areas, which one of them we will be talking about
4 in a little while here on the control system that
5 comes up, how are we going to do the maintenance here?
6 You said it gets done during outages. Well, we don't
7 want to do it during outages. We would rather do it
8 online.
9 And I think if you look at our PRA, one of
10 the insights that you would probably get out of
11 Revision 1 is, you know, maybe it's better to do the
12 maintenance for the diesel generators online, rather
13 than during shutdown, because during shutdown that's
14 when you kind of rely on them for performing shutdown
15 cooling and things like that. So that will have to be
16 resolved as we go through this.
17 Now, I'm trying to remember, I don't think
18 that in the final fault tree model that we completely
19 left out test and maintenance of the diesel
20 generators, but it may not be a value that's as high
21 as you might expect if we're going to be doing all the
22 maintenance.
23 MEMBER MAYNARD: Well, part of your -- in
24 the written text, the assumption that you stated was
25 no presuming.

1 MR. WACHOWIAK: Yes.

2 MEMBER MAYNARD: And rely for -- it covers

3 both -- it's covered somehow and you're going to have

4 some availability for it. One last question. You

5 relied for the long-term on some portable power

6 supplies to be plugged into that certain location, but

7 I think that you these portable power supplies would

8 be part of the design equipment in the plant.

9 MR. WACHOWIAK: Those that you move from

10 the plant design subsequent to our submitting with one

11 of the PRA that stated that, so they are no longer in

12 the design.

13 MEMBER MAYNARD: Okay.

14 MR. WACHOWIAK: A specific configuration

15 for how those would be used didn't provide the benefit

16 that we were expecting, so that --

17 MEMBER MAYNARD: My next question which

18 you also said human intervention for this particular

19 one, somebody is going to have to come up with an

20 eliminator, so that's my last question.

21 MR. WACHOWIAK: Right.

22 CHAIRMAN APOSTOLAKIS: So you are going to

23 talk about the sequence now?

24 MR. WACHOWIAK: Yes.

25 CHAIRMAN APOSTOLAKIS: Okay.

1 MR. WACHOWIAK: We've kind of been talking
2 around.
3 CHAIRMAN APOSTOLAKIS: I know.
4 MR. WACHOWIAK: So here in this sequence,
5 the initial level goes below Level 1.5 and this timer
6 starts. And if two CRD pumps are operating, then we
7 would not go down the plant. In this particular
8 case --
9 CHAIRMAN APOSTOLAKIS: No, you need to run
10 the two. So what you are saying is both of them fail?
11 MR. WACHOWIAK: In this case?
12 CHAIRMAN APOSTOLAKIS: Both of them fail,
13 both.
14 MR. WACHOWIAK: You need both.
15 CHAIRMAN APOSTOLAKIS: The IC says that --
16 MR. WACHOWIAK: Two are required.
17 CHAIRMAN APOSTOLAKIS: Both are required?
18 MR. WACHOWIAK: Yes.
19 CHAIRMAN APOSTOLAKIS: Okay. All right.
20 MR. WACHOWIAK: So two pumps are required,
21 so one fails, so one is injecting, two have failed to
22 restore past the timer. Sometimes we'll be talking
23 success and failure space.
24 CHAIRMAN APOSTOLAKIS: That confuses me a
25 little bit, because if I go to the table of the top

1 200 concepts, in almost all of the sequences, you have
2 two events mispositioning your valve at F013A and
3 mispositioning for F013B. So and then you multiply
4 the numbers that you show. I mean, these I guess are
5 the cutsets availability. So what you are saying is
6 that both must fail, right? But tell me if you need
7 any more.
8 MR. WACHOWIAK: That's correct. We're all
9 here and it looks like this loss of feedwater path,
10 which was --
11 CHAIRMAN APOSTOLAKIS: Well, I'm looking
12 at the table. Where are you now?
13 MR. WACHOWIAK: Like that is your picture
14 there for the loss of feedwater?
15 CHAIRMAN APOSTOLAKIS: Yes.
16 MR. WACHOWIAK: Which is exactly the same
17 structure as loss of off-site power.
18 CHAIRMAN APOSTOLAKIS: Okay.
19 MR. WACHOWIAK: I have cut off -- in this
20 picture up here, I have cut off the second half of --
21 CHAIRMAN APOSTOLAKIS: Right.
22 MR. WACHOWIAK: -- the tree. So we can
23 see this particular case. So we have successful
24 SCRAM.
25 MEMBER SIEBER: Can you go to the

1 microphone?

2 CHAIRMAN APOSTOLAKIS: Yes.

3 MR. WACHOWIAK: Yes, I'm sorry.

4 MEMBER SIEBER: Just hold it up here. I'm

5 looking.

6 MR. WACHOWIAK: Yes. We have the

7 successful SCRAM.

8 CHAIRMAN APOSTOLAKIS: Right.

9 MR. WACHOWIAK: The next is this U2CI

10 short. Two CRD pumps required and isolation

11 condensers.

12 CHAIRMAN APOSTOLAKIS: Yes, 3 or 4.

13 MR. WACHOWIAK: We have 4, 3 or 4 need to

14 open. So in this case, either one CRD pump or

15 multiple ICS valves or ICS paths fail. So the cutsets

16 almost all show -- almost all get there with the

17 failure of one CRD pump. So let's say mispositioning

18 of one of those valves would fail the CRD pump.

19 CHAIRMAN APOSTOLAKIS: Now, that's my

20 problem, the cutset data.

21 MR. WACHOWIAK: I'll get there.

22 CHAIRMAN APOSTOLAKIS: Okay.

23 MR. WACHOWIAK: We have a successful

24 depressurization, but then after depressurization we

25 talk about injection. And here under injection, one

1 of two CRD pumps can be successful for injection.

2 CHAIRMAN APOSTOLAKIS: Okay.

3 MR. WACHOWIAK: So you pick up the other

4 CRD pump, CRD train failure on this branch.

5 CHAIRMAN APOSTOLAKIS: Okay.

6 MR. WACHOWIAK: And then you come through

7 and you get the GDCS and FAPCS right here.

8 CHAIRMAN APOSTOLAKIS: So the cutset I was

9 looking at included this event, which is -- that will

10 resolve.

11 MR. WACHOWIAK: Right.

12 CHAIRMAN APOSTOLAKIS: Maybe better.

13 MR. WACHOWIAK: So the first --

14 CHAIRMAN APOSTOLAKIS: The first one was

15 this.

16 MR. WACHOWIAK: Then the interesting thing

17 about this --

18 CHAIRMAN APOSTOLAKIS: Yes.

19 MR. WACHOWIAK: -- is that we have taken

20 away the ability to use the isolation condenser of the

21 CPS. This sequence is high, because one of our high

22 pressure systems is gone.

23 CHAIRMAN APOSTOLAKIS: Right.

24 MR. WACHOWIAK: The nicest to have high

25 pressure system is now gone, because of that failure

1 of one CRD pump train.

2 CHAIRMAN APOSTOLAKIS: Now, continuing

3 along these lines.

4 MR. WACHOWIAK: Okay.

5 CHAIRMAN APOSTOLAKIS: I have a couple of

6 comments. So in many of these cutsets, you have the

7 mispositioning of the two valves that kill the CRDs.

8 And these are due to --

9 MR. WACHOWIAK: Pre.

10 CHAIRMAN APOSTOLAKIS: Pre-event.

11 MR. WACHOWIAK: Event.

12 CHAIRMAN APOSTOLAKIS: And the human

13 errors have killed those independently. And because

14 you have availability of $4.8X10^{-2}$ for each one and

15 then if you do the calculations, you multiply them and

16 what the cutset will be. So I'm wondering why they

17 are independent. The joint availability, if you

18 multiply, is around $2.5x10^{-3}$. And I mean, if you have

19 human errors of this type, usually there is some sort

20 of dependence. And again, because these two events

21 appear in the majority of these cutsets, they will

22 probably submit back all the numbers.

23 So maybe that's something you have to look

24 at.

25 MR. WACHOWIAK: That is something that we

1 should look at.

2 CHAIRMAN APOSTOLAKIS: Yes.

3 MR. WACHOWIAK: I believe it is something

4 that we did look at. I just don't have the number or

5 the answer off the top of my head. We did do a

6 operator dependence analysis and I'll have to look at

7 the justification, look for that.

8 CHAIRMAN APOSTOLAKIS: But that analysis

9 should not be separate from this. I mean, it's not a

10 sensitivity study. It's something that you do

11 continue. Just as in the same cutset you consider the

12 common cause failure of those squib valves. You do

13 have that. So it seems to me that human error should

14 be some dependence there. I don't think the number

15 will change that much, but assuming it is, but

16 ultimately it's right. I mean, you answered.

17 MR. WACHOWIAK: I agree that that might

18 make a difference.

19 CHAIRMAN APOSTOLAKIS: Right.

20 MR. WACHOWIAK: One of the things that we

21 have done and we'll talk about this later, we have

22 done a change to the plant in Rev 2 of the DCD, the

23 upcoming Rev 2 of the PRA.

24 CHAIRMAN APOSTOLAKIS: Right.

25 MR. WACHOWIAK: That we don't want this

1 the way that this is set up here, but we lose the
2 isolation condenser system from something as simple as
3 not starting two CRD pumps. So the plant has been
4 reconfigured so that this sequence in the middle here
5 goes away and now it looks more like the loss of off-
6 site power at the generic transient.
7 CHAIRMAN APOSTOLAKIS: Yes. Now --
8 MR. WACHOWIAK: We'll have to look into
9 that operation actually.
10 CHAIRMAN APOSTOLAKIS: Yes.
11 MR. WACHOWIAK: I know we --
12 CHAIRMAN APOSTOLAKIS: That's why I
13 wondered.
14 MR. WACHOWIAK: Because when the
15 dependence analysis based on all the cutsets and I
16 just don't remember how that one came out off the top
17 of my head.
18 CHAIRMAN APOSTOLAKIS: Well, remember
19 cutsets that are here are simply the product.
20 MR. WACHOWIAK: Yes.
21 CHAIRMAN APOSTOLAKIS: Yes. The
22 individual sequences, you know, if you look at these
23 three or the --
24 MR. WACHOWIAK: Yes.
25 CHAIRMAN APOSTOLAKIS: -- loss of

1 preferred power tree, they all seem to have a
2 probability frequency of 2 or $3x10^{-10}$. So I guess we
3 have much of those or if you have enough, you have 10^{-}
4 ^{8}.
5 MR. WACHOWIAK: Yes.
6 CHAIRMAN APOSTOLAKIS: Okay.
7 MR. WACHOWIAK: And so these are the
8 cutsets you are talking about.
9 CHAIRMAN APOSTOLAKIS: Yes.
10 MR. WACHOWIAK: The top ones are --
11 CHAIRMAN APOSTOLAKIS: Yes, yes, yes, yes.
12 So I'm looking at No. 16. I don't know if you have
13 16. Well, all of these look at them. Number -- yes,
14 the first one. You see one of these is misposition of
15 valve 13A, 13B. This is the CRDS. Since $4.8x10^{-2}$,
16 $4.8x10^{-2}$ and if you multiply the 1, 2, 3, 4, 5 numbers
17 under event availability, indeed, you get the cutset
18 probability, that number.
19 MR. WACHOWIAK: Yes.
20 CHAIRMAN APOSTOLAKIS: So that does move
21 a little bit too, because it's independent.
22 MR. WACHOWIAK: They were treated as
23 independent.
24 CHAIRMAN APOSTOLAKIS: So there are such
25 lines. We look into it.

1 MR. WACHOWIAK: Yes, we'll look into it
2 later. There might be a reason for it, because I know
3 we did this analysis to look at all those cutsets or
4 dependent actions within cutsets.
5 CHAIRMAN APOSTOLAKIS: And so my other
6 comment was if you look at the cutset probabilities,
7 they are 10^{-10}, right? So you have about 40 such
8 sequences or so to bring it up and I think you do.
9 MR. WACHOWIAK: Yes.
10 CHAIRMAN APOSTOLAKIS: Because the
11 sequences are under 44, they show you more sequences.
12 So if we take another 1 or 2.5×10^{-7} and multiply that
13 by 40, I get up to 10^{-8}. So any one of those might be
14 a new CCF squib valve and the mispositioning of the
15 valves of the CRDs, they are almost everywhere.
16 MR. WACHOWIAK: Yes.
17 CHAIRMAN APOSTOLAKIS: They are almost
18 everywhere, if not everywhere.
19 MR. WACHOWIAK: Yes. The mispositioning
20 of the valves --
21 CHAIRMAN APOSTOLAKIS: Yes.
22 MR. WACHOWIAK: -- turns out to be the
23 dominant failure mode for the CRD.
24 CHAIRMAN APOSTOLAKIS: CRD, yes, okay.
25 MR. WACHOWIAK: So the question, one

1 question could be like what when we did the standby
2 liquid controls. Should these valves be instrumented
3 in the alarm, so that that can happen? The answer is
4 probably yes. Are we required to do it for the 10^{-8}
5 sequence? No. And so at this point, we haven't gone
6 back and said you have to do that. We have said we
7 would like you to consider whether or not you would do
8 that.
9 CHAIRMAN APOSTOLAKIS: Yes.
10 MR. WACHOWIAK: It's a human-man-machine
11 interface being the things they are looking at.
12 CHAIRMAN APOSTOLAKIS: I guess you are
13 partial to the issue of acceptable risk. I mean,
14 there is always a sequence that we don't need, that we
15 don't want to push.
16 MR. WACHOWIAK: Right.
17 MEMBER SIEBER: I don't have a quarrel
18 with that.
19 CHAIRMAN APOSTOLAKIS: But at the same
20 time, there are certain rules when you do PRA with
21 dependence and all that and it would be nice to follow
22 that.
23 MR. WACHOWIAK: Well, it would. I'll take
24 a look at this.
25 CHAIRMAN APOSTOLAKIS: Yes, I understand.

1 MR. WACHOWIAK: If I have the information
2 with me on my computer, over lunch I can give you the
3 answer before we come back from lunch. We went
4 through and we looked at all those pairs and there is
5 a misposition on all of those pairs in our
6 documentation. I just have to find it.
7 CHAIRMAN APOSTOLAKIS: Right. Okay.
8 Thank you. Now, if we go back in the sequence?
9 MR. WACHOWIAK: Okay. You want to look at
10 the tree or do you want to look at the --
11 CHAIRMAN APOSTOLAKIS: No, the
12 description. That was really very nice.
13 MR. WACHOWIAK: The description?
14 CHAIRMAN APOSTOLAKIS: Yes.
15 MR. WACHOWIAK: Let's see.
16 CHAIRMAN APOSTOLAKIS: Injection systems
17 fail.
18 MR. WACHOWIAK: Injection systems fail.
19 What else?
20 CHAIRMAN APOSTOLAKIS: Regarding the
21 gravity system.
22 MR. WACHOWIAK: And the active systems.
23 So when you go back to the cutsets, the gravity-driven
24 system is failed by the squib valves.
25 CHAIRMAN APOSTOLAKIS: Yes.

1 MR. WACHOWIAK: And then that operator
2 action, the operators fail to recognize the need for
3 low pressure injection.
4 CHAIRMAN APOSTOLAKIS: Right.
5 MR. WACHOWIAK: That operator actually is
6 in there.
7 CHAIRMAN APOSTOLAKIS: Which, by the way,
8 I checked out. It was pretty nice. You have nice
9 stuff. I mean, you follow the EPRI calculator and the
10 bundles of the hardware and so on. This goes -- no
11 comment on that. But the gravity system, I mean, it's
12 a passive system and you assume that it will work as
13 long as the lines are open, right?
14 MR. WACHOWIAK: Yes.
15 CHAIRMAN APOSTOLAKIS: Have you done any
16 calculations to confirm that? I mean, are there any
17 uncertainties anywhere that might make this -- there
18 is a lot of work now, especially coming out of Europe,
19 the European Union where they are looking at the
20 possible failure of passive systems. I must say I
21 haven't seen in any of those papers a smoking gun that
22 says hey, everybody is missing this. They really are
23 proposing ways of doing the FMEAs and HAZOPS to
24 identify potential failure modes. And my question is
25 what these guys are saying for what applies about the

1 gas reactors, you know, in water.

2 But we don't second guess in various

3 parameters that they use in the thermal-hydraulic

4 analysis of these systems and often the pipes,

5 transfer efficiency and so on. And it turns out that

6 for some combination of values there, because there

7 are distributions, you do get say high temperatures.

8 You evaluate some criteria.

9 And I'm wondering whether you are worried

10 about it. I mean, you never brought any analysis that

11 I have seen in the PRA, but do you worry at all about

12 it? I mean, do you have any calculations or are these

13 calculations including uncertainty or are they best

14 estimate calculations and they are all met the

15 criteria?

16 MEMBER SIEBER: First of all, I think the

17 calculations of thermal-hydraulics --

18 CHAIRMAN APOSTOLAKIS: Yes.

19 MEMBER SIEBER: -- are an action of

20 something for this point.

21 MR. WACHOWIAK: The --

22 CHAIRMAN APOSTOLAKIS: Right. But best

23 estimates? I mean, if you never see the

24 uncertainties, you will never find them.

25 MEMBER SIEBER: Best estimates. The big

1 issue with this plant is the reactor vessel is almost
2 100 in times and there is a very tremendous amount of
3 water there.
4 CHAIRMAN APOSTOLAKIS: That's right.
5 MEMBER SIEBER: And you don't go below the
6 first foot of the core under any sequence that I
7 recall, as far as --
8 MR. WACHOWIAK: Yes, in the PRA success
9 criteria, I think some of the -- just a couple of
10 sequences dipped a little and then came back on.
11 Those were all -- see, in what we have reported, you
12 don't see the thermal-hydraulic uncertainty issue.
13 MEMBER SIEBER: Yes.
14 MR. WACHOWIAK: That's one of the things
15 that is an ongoing dialogue with the staff. I have a
16 short presentation on how we're trying to resolve this
17 a little later today.
18 MEMBER SIEBER: Okay.
19 MR. WACHOWIAK: But I understand that the
20 issues in where I am in doing this for the PRA, we
21 have certain tools and certain ways of calculating
22 this that for all of our purposes, we show that we can
23 -- we get plenty of flow with margin. I performed
24 cases that was using MAAP and trying to adjust things
25 like the friction, a surrogate for friction on the

1 valve coming in and, you know, you would have to go to
2 very, very --
3 MEMBER SIEBER: Small value.
4 MR. WACHOWIAK: -- small values before we
5 get to a case where we end up melting the core. And
6 we think that the success criteria that we have is
7 conservative in there now and the question is though
8 how do you prove it using the tools that you have,
9 that we have available to us? That's what is what the
10 special of the staff is at this point.
11 CHAIRMAN APOSTOLAKIS: I understand the
12 plant in this particular report on this.
13 MR. WACHOWIAK: Yes. A little different
14 than we had found before, but I have a slide on that
15 later.
16 MEMBER ABDEL-KHALIK: A related question.
17 You made a statement somewhere in your report that
18 maybe due to high pressure as expected when squib
19 valves are fired open, is this based on a dynamic
20 loading analysis of the points where these valves are
21 located? Do you sort of shockwave situation
22 calculations or anything like that or was this just
23 sort of based on experience?
24 MEMBER SIEBER: Yeah.
25 MR. WACHOWIAK: Well, the first thing that

1 we have is there is a check valve in that line that is
2 expected to prevent that, the pressure wave from
3 getting back to the GDCS pool. We would also have the
4 structural -- you know, if that failed, do we have a
5 failure of the GDCS pool? And the answer I got back
6 was the check valve is supposed to prevent that and
7 they don't think so.
8 MEMBER ABDEL-KHALIK: Well, not
9 necessarily the failure of the pool.
10 MR. WACHOWIAK: Okay.
11 MEMBER ABDEL-KHALIK: I'm talking about
12 failure of the pipe itself.
13 MR. WACHOWIAK: Failure of the pipe
14 itself?
15 MEMBER ABDEL-KHALIK: Right.
16 MR. WACHOWIAK: Is this the case where the
17 valve opens when it is supposed to or is this a case
18 where the valve opens when it is not supposed to?
19 MEMBER ABDEL-KHALIK: When the valve opens
20 when it is supposed to.
21 MR. WACHOWIAK: Okay. In that case, there
22 shouldn't be really any shockwave at all. The valve
23 is not supposed to open until the pressure of the
24 reactor is down probably close to around 30 pounds.
25 MEMBER SIEBER: Right.

1 MR. WACHOWIAK: It opens at a low
2 pressure. So, you know, we didn't go through the
3 whole second half of your question about the 105
4 second timer.
5 MEMBER ABDEL-KHALIK: Right.
6 MR. WACHOWIAK: The 105 second timer is
7 there to allow the reactor to depressurize before the
8 squib valves open the GDCS lines. So the idea there
9 is that they would -- that those valves don't open
10 until there is almost no pressure in the reactor. So
11 that you are right at the point where they have the
12 water and the GDCS tank will allow the flow into the
13 reactor. The calculations that were done for the
14 design basis determined that proper time point.
15 So when you get the ECCS signal on Level
16 1, there is a sequencing. The first -- some of the
17 SRVs own them for a time period and then first time it
18 could reach the DPVs open and then the next bay and
19 then the final bay and then all about -- the time and
20 the final ones open. The reactor is close to
21 depressurizing and the GDCS valves will then open.
22 Because what we don't really want to happen, we took
23 the check valve in the line to prevent backflow just
24 in case the valve opens early. But it's an open check
25 valve.

1 So we don't want the valve to be closed in
2 the line and then have to be reopened by the head of
3 the water, the GDCS pool. So it's normally an open
4 check valve. And you wait until the pressure of the
5 reactor is low enough, so that when you open that
6 squib valve, it doesn't seek the check valve and then
7 it has to reopen. We would open the squib valve only
8 after we would have calculated that the flow would
9 start and that's where those timers and permissives
10 all come in.
11 So I think in the PRA though we, outside
12 of something I looked at --
13 MEMBER ABDEL-KHALIK: We have determined
14 that of all pipes disinitiation of the squib valves we
15 will say as failure of the squib valves to open from
16 a mechanistic standpoint, because it's just gone
17 through all that water and never making it to the
18 reactor vessel.
19 MR. WACHOWIAK: The effect would be the
20 same.
21 MEMBER ABDEL-KHALIK: Right.
22 MR. WACHOWIAK: But once again, I'm not
23 sure that there is going to be significant loading on
24 those pipes by the time you get to the point where
25 they would open.

1 MEMBER ABDEL-KHALIK: Okay.

2 VICE CHAIRMAN SHACK: I guess it's a
3 question of whether your risk of failure that -- your
4 timer failure on that.

5 MR. WACHOWIAK: Yes. Well, it's a timer
6 failure in combination with the low pressure
7 permissive failure. So that would fall down into the,
8 basically, the I&C cover mode failure, which also is
9 included in the model and is stuck on the -- or is
10 already included in the failure success later. So I
11 don't think it would add much by explicitly calling
12 those out, other than in the description maybe some
13 there, but I don't think the results would change.

14 Because once again, remember that this is
15 all in the I&C system. It's not like we have an
16 individual timer for things. This is all built into
17 the logic cards, so there is logic modules that do
18 timers. There is logic modules that do pressure
19 comparisons and where those come together, right now
20 we couldn't say if both of those calculations are even
21 done on the same processor.

22 So I want to make sure that I have covered
23 everything. SCRAM was successful. The water level
24 goes down and you really don't get water level
25 recovery. In most likely cases, the CRD pumps that

1 fail. ADS works. The depressurization is what causes
2 ICS to be ineffective.
3 MEMBER SIEBER: Right, can work.
4 MR. WACHOWIAK: So ICS most likely would
5 work just fine, but it can't, because there is no
6 pressure in the reactor. In here, I said injection
7 systems fail. This covers GDCS as we said, FAPCS and
8 fire water, as we said, and then this is the part
9 where I think we list the four. This also includes
10 the second CRD pump. So we fail one CRD pump here and
11 the second CRD pump failure comes in down here.
12 In the end, this is the core damage
13 sequence where the vessel fails at low pressure and
14 when the vessel fails, the lower drywell water level
15 is going to be low, below the level of concern for
16 steam explosion. So this is what defines the Level 2
17 interface on these sequences.
18 Were there any other questions about this
19 particular sequence?
20 VICE CHAIRMAN SHACK: When was this
21 conducted, is a question maybe? Now, look at the
22 seismic event tree, which has some similarities to
23 this. When you go through the seismic event, you have
24 lost D/C power now, so now you really -- you know, you
25 have an isolation condenser in a passive system. If

1 you SCRAM, you don't count the isolation condenser
2 system. If you fail to SCRAM and you inject the SLC
3 system, you then take credit for the isolation
4 condenser system and you lose the passive systems for
5 the effect it leads to, the control.
6 Why do I credit the isolation condenser
7 when I inject the SLC and I don't when I SCRAM?
8 MR. WACHOWIAK: It's a good question.
9 Fortunately, there is an answer.
10 VICE CHAIRMAN SHACK: Okay.
11 MR. WACHOWIAK: One of the things you
12 mentioned was that you lose D/C power. You actually
13 lose A/C power because of the power. So -- well,
14 there is a thing about D/C power that we'll talk about
15 in this next part of this, but you lose A/C power.
16 What we have for the -- in the atlas case,
17 there is an inhibit of ADS, so if we had a valid SCRAM
18 signal, then the APRMs don't show a downscale low for
19 some short time period. ADS is prevented from
20 operating. It's locked out. So in the atlas, ADS
21 never actually actuates at low level depressurization
22 that takes out the isolation condensers.
23 So what happens in the atlas especially in
24 that case, we lose feedwater, which in the atlas is a
25 -- I don't want to say it's a good thing, but it aids

1 in the short-term response because we want the water
2 level to come down low to start the power level
3 reduction.
4 MEMBER SIEBER: Right.
5 MR. WACHOWIAK: Okay? Then standby liquid
6 control will go in and signal them with a standby
7 liquid control system. The ADS inhibit has already --
8 that's part of -- it's either the same logic or it
9 takes the same signals to do that.
10 So with standby liquid controls coming in,
11 water levels coming down, power levels is coming down
12 and at one point there, we'll close in a couple
13 minutes into the sequence the isolation condensers are
14 able to remove decay heat and keep the level at a
15 steady state there without any injection coming at
16 all.
17 VICE CHAIRMAN SHACK: But you told me here
18 I needed the injection. I couldn't do it with just
19 the sealed system.
20 MR. WACHOWIAK: You need the injection to
21 prevent the ADS. In the atlas condition, the atlas
22 condition itself prevents the ADS.
23 VICE CHAIRMAN SHACK: Prevents the ADS.
24 Okay.
25 MR. WACHOWIAK: Once again, it's complex

1 and we'll see a little bit later that it doesn't work
2 that way anymore. Well, we didn't want that. We
3 didn't want to have to go through those things and
4 challenge our depressurization quite so much. So we
5 have done a design change to the plant in that
6 isolation condensers are just by -- in the loss of
7 feedwater, loss of off-site power events. We won't
8 depressurize unless we really have to.
9 MEMBER SIEBER: That's good.
10 MR. WACHOWIAK: Any more on this sequence?
11 We'll come down through and we're going to find pretty
12 quick that we have gone through all our CDF in just a
13 few sequences.
14 MEMBER SIEBER: Two, yes.
15 MR. WACHOWIAK: Is it two or is it four?
16 MEMBER SIEBER: I didn't know what you
17 mean by all of your CDF.
18 MR. WACHOWIAK: 99 percent. The next one,
19 the next sequence is, notice, the same sequence, TP
20 water plus loss of feedwater and it's Sequence No. 44.
21 You can use the feedwater, loss of off-site power with
22 that tree structure interchangeably. And what we have
23 here is exactly the same thing. And the reason is
24 because the loss of -- the result of the loss of off-
25 site power is, essentially, loss of feedwater.

1 And total immediate loss of feedwater is
2 the only way to get in -- was the only way to get into
3 that scenario where you challenge the depressurization
4 signal on the timing. So this one goes exactly the
5 same.
6 The next one I have in the package here
7 should be --
8 MEMBER SIEBER: Another LOPP.
9 MR. WACHOWIAK: It's another LOPP one, but
10 it's not a LOPP that only contributes 1 percent and
11 it's Sequence 49. Let me -- yes, I was going to bring
12 up the picture that we were using to illustrate
13 before, but Sequence 49 is this sequence down here.
14 So, once again, we have a short-term
15 failure. ADS fails. Now, this is one of these things
16 where it's hard to tell from the picture what is
17 exactly going on here, but what we found is that in
18 this particular sequence, the only things that are
19 causing the depressurization failure here that make it
20 through truncation is the loss of D/C power.
21 MEMBER SIEBER: Okay.
22 MR. WACHOWIAK: Okay? Now, the loss of
23 D/C power, isolation condensers still have a chance to
24 work because there's two parallel paths for injecting
25 or for initiating isolation condensers. One is a poly

1 hairpin valve and the other is a loss of power. It
2 opens on a loss of power. So if we lose all of our
3 batteries, then these particular valves can open. So
4 this sequence here though has the mechanical failure
5 of those valves to transfer or other things that could
6 fail, fail those in the sequence.
7 So that is why you can -- that is why the
8 sequence works here. If loss of D/C power fails
9 depressurization, then it's possible that the GDCS or
10 the ICS can work. Once again, you go through the
11 different scenarios. Here we look at pressure relief
12 because since you have it open, isolation condensers,
13 the vessel will remain at pressure and you would have
14 to relieve that pressure without -- before you break
15 the vessel. We say that that mechanical function, the
16 relief valves, works.
17 Once again, because it's D/C, losses of
18 D/C power, those come on through and the loss of D/C
19 will also fail the CRD system and the SRVs and you end
20 up in a high pressure sequence. And go back to the
21 description, and this is the generic description here.
22 I was talking more about how the cutsets end up or the
23 individual terms fail these things. So we end up with
24 a vessel failure at high pressure.
25 MEMBER SIEBER: That's pretty exciting.

1 MR. WACHOWIAK: Yes, it would be.

2 MEMBER SIEBER: The last line is license

3 revoked.

4 MR. WACHOWIAK: The next sequence down is

5 a medium LOCA sequence. I don't have the picture for

6 this one to go though it, so we'll try to do it in

7 words. Less than 1 percent is where we are here down

8 in this sequence. This graph, the medium LOCA liquid

9 in ESBWR is most likely a GDCS line maybe or some

10 other, like an isolation condenser discharge line

11 break, something like that.

12 So it's one of the connections to the

13 vessel that is in the area that is normally covered by

14 water during power operation. So once we move up

15 beyond, up to the steam lines and the DPV lines and

16 ICS lines, those would be steam line breaks that would

17 be MLS under the same thing, but in these cases the

18 MLL would be GDCS lines or the ICS, whichever one.

19 In this particular case, the fault tree

20 handles which one it is. If there is terms in there

21 that there is a split fraction, if you will, that says

22 it's GDCS line versus the other lines, because the

23 GDCS line affects the success criteria of the GDCS,

24 we're probably going to separate those into two event

25 trees for the Rev 2 and you will see a GDCS line.

1 Well, I think what we're going to just do
2 is go through each line independently and show what is
3 going on there rather than aggregating. It cuts down
4 on explanations and so forth.
5 MEMBER ABDEL-KHALIK: So failure of one of
6 the equalizing lines, even though you had a 60
7 millimeter sort of restriction right at the connection
8 with the vessel, would fall in that category?
9 MR. WACHOWIAK: Yes. The way we did the
10 demarcation between small and medium liquid is the CR
11 -- one CRD pump needs to be able to keep up with the
12 flow through the break in order for it to be a small,
13 so that is about a 25 millimeter line. So the 60
14 millimeter would be a medium pipe range.
15 MEMBER ABDEL-KHALIK: Okay.
16 MR. WACHOWIAK: As I said, if you look in
17 the design basis LOCA, the analogous sort of thing,
18 Chapter 6 of the DCD, this would be called the GDCS
19 line break. Successful SCRAM, vacuum breakers do
20 perform their function so that the containment works
21 as a pressure suppression containment. Feedwater is
22 now failing in this scenario for one of various
23 reasons that feedwater can fail. We have no low
24 pressure injection. Further depressurization is
25 unsuccessful and then the GDCS lines fail to provide

1 sufficient flow.

2 So a couple of things that we didn't
3 consider here, FAPCS. Right now we don't have an
4 analysis that shows in the LOCAs that we're going to
5 get -- that we can continue with FAPCS long-term
6 because of where the suction is taken out of the
7 suppression pool. We have got to do some more work on
8 looking at that particular scenario to see if we can
9 maintain long-term cooling in the LOCAs using a pump
10 source from the suppression pool.

11 It's different than the equalizing lines
12 since we don't have to worry about NPSH and other
13 things there. This pump source from the suppression
14 pool, we didn't have enough information to tell if we
15 could flood that long-term. As we refine, get more
16 details on how that is connected into the suppression
17 pool and what type of controls that there are that are
18 going to be on the pump, we may be able to add that in
19 later. We just didn't have the information for you at
20 this point.

21 We didn't ask the CRD in the event tree,
22 we said because of an inadequate water supply. Once
23 again, we have changed or have upgraded the amount of
24 water in the CST since when this was originally done,
25 we'll be re-performing that success criteria

1 calculation to determine if there now is sufficient
2 water in the CST for the multiple cases.
3 But in the end, since ADS was successful
4 at the low pressure case, the lower drywell water
5 level is high in the Level 2, which will result in
6 steam explosion and the containment failure.
7 MEMBER ABDEL-KHALIK: Wow.
8 MR. WACHOWIAK: And if you look at the
9 last presentation, the X vessel explosion was about .8
10 percent of CDF. That is the sequence. Any questions
11 on this one? So it's not a good scenario, but luckily
12 a lot of things happen to be able to get there. Those
13 are all of them that were at, approximately, 1 percent
14 and higher. Everything else is less than 1 percent.
15 MEMBER SIEBER: Some are expensive.
16 MR. WACHOWIAK: So I can talk about other
17 scenarios, but --
18 CHAIRMAN APOSTOLAKIS: Okay. The sequence
19 process. Go ahead.
20 MR. WACHOWIAK: Well, let me see.
21 VICE CHAIRMAN SHACK: Relief valve
22 failure, do you consider it a sequence? The
23 probability of one of these valves failing versus the
24 probability that all of them would fail for this is
25 about the --

1 MR. WACHOWIAK: Relief.

2 VICE CHAIRMAN SHACK: -- I think the

3 safety relief valve.

4 MEMBER SIEBER: The safety valve.

5 MR. WACHOWIAK: Yes. In these particular

6 scenarios where it's not an atlas case, it's just

7 removing the KD, we have shown that all we need is one

8 relief valve to lift to prevent the vessel from over-

9 pressurizing.

10 VICE CHAIRMAN SHACK: But this is -- now,

11 this is a LOCA?

12 MR. WACHOWIAK: And it's even less. Okay.

13 I'm sorry, I was off back on the -- let me back up to

14 the sequence. I was -- okay.

15 VICE CHAIRMAN SHACK: I'm just asking in

16 the LOCA sequence that you have, I mean, you really do

17 assume that all the safety relief valves were working,

18 fail to open with the probability of $3x10^{-4}$, which

19 seems very high.

20 MR. WACHOWIAK: Okay. Now, I understand

21 your question.

22 VICE CHAIRMAN SHACK: Sure.

23 MR. WACHOWIAK: That particular scenario

24 that you're talking about is in one of the steam LOCA

25 scenarios.

1 VICE CHAIRMAN SHACK: Right, it's a steam
2 LOCA.
3 MR. WACHOWIAK: It's not this one. It's
4 a steam LOCA. We looked at that two different ways.
5 One, from the spurious opening of a DPV and then a
6 spurious DPV initiation signal. So those values are
7 really calculated differently. All of them opening is
8 not a common mode failure of DPVs themselves opening.
9 That is a failure in the control system that initiates
10 those. We think that value is actually very high.
11 There is a different calculation that was
12 done in Chapter 15 for the probability of a spurious
13 actuation of a DPV or of that system and it was lower
14 than the value that we used in the PRA.
15 VICE CHAIRMAN SHACK: So if you took a
16 value from 5750 for a spurious ADS initiation, that's
17 the value you used?
18 MR. WACHOWIAK: It has the value that we
19 used. We didn't look at our specific control system.
20 Now that we know more about what our control system
21 looks like, we'll be able to go in and do a better
22 job, still not -- we won't have everything there, but
23 we will have a better job of being able to calculate
24 that.
25 VICE CHAIRMAN SHACK: But even with that

1 high frequency, it doesn't seem to be a big
2 contributor.
3 MR. WACHOWIAK: Because it's a steam LOCA.
4 VICE CHAIRMAN SHACK: LOCA.
5 MR. WACHOWIAK: Steam LOCAs are very easy
6 to handle in ESBWR. Steam LOCAs are -- basically, you
7 don't even -- in many of the cases you don't have to
8 consider much on AD -- on the depressurization system.
9 It sets it up. A large steam LOCA sets up GDCS to
10 work and a spurious ADS signal sets up GDCS to work
11 and it gets you almost all the way. The initiator
12 gets you almost all the way there.
13 VICE CHAIRMAN SHACK: But in your design
14 to do this.
15 MR. WACHOWIAK: It is designed to do that.
16 A steam line break is part of the design, essentially.
17 So we wouldn't expect to see LOCAs that contribute
18 highly to all this.
19 MEMBER SIEBER: And after the blowdown,
20 you have still got a fair amount of inventory.
21 MR. WACHOWIAK: And there is still -- yes,
22 right. You're not losing inventory along with the
23 blowdown.
24 MEMBER SIEBER: Well, you're losing some.
25 MR. WACHOWIAK: And it's going to one

1 place.

2 MEMBER SIEBER: Not a lot.

3 MR. WACHOWIAK: Because now it's -- any
4 inventory that you lose is going into the GDCS pool to
5 be ready to shipped back right into the vessel. So
6 steam LOCAs are very easy to handle in the ESBWR.

7 MEMBER SIEBER: I think the operators
8 could even go eat lunch, right? Wait until it's done.

9 MR. WACHOWIAK: Okay. Are there any other
10 questions? Well, no, I was moving on to one other
11 thing that I wanted to look at here, and this was our
12 long-term cooling. We have gone back and forth on
13 this. Revision 0 of the PRA had the 72 hour sequences
14 all built into the CDF, but we didn't transfer. We
15 didn't transfer those to the Level 2.

16 In Revision 1 we performed the Level 1
17 only out to the short-term, well, 24 hour, 24 hour
18 stabilization, but didn't look at what might happen
19 later on in the main section of the report. In the
20 sensitivity area we looked at what was actually
21 happening in those longer term sequences.

22 Now that we have gone through this
23 exercise and we know how we're going to treat these,
24 I think the next rev we're actually going to bring
25 them back up again and treat the Class II sequences

1 like containment bypass sequences. Well, what we did
2 here was we took everything that was listed as Class
3 II, so like if I went back to my simplified event
4 tree, is that clear, these things here where there was
5 some kind of successful injection, but there was a
6 containment challenge, so like this path here, this
7 path here and this, I think it's that path.
8 The ones that -- where we have successful
9 GDCS, but we want to have long-term cooling, so it's--
10 the cooling is being provided by sources inside of the
11 containment. And so that's why on your big event
12 trees you can see how those were all expanded. We
13 consider all the systems that we had left that we
14 hadn't credited already and any other systems that
15 might become available for those times and looked out
16 to a longer time frame.
17 And what we ended up finding was that most
18 of these sequences, when you consider everything else
19 that we have left, don't really contribute that much
20 more. Where we ran into some issues in Rev 0 was that
21 we didn't credit all the systems that we actually had
22 on those branches and the number came out to be 8
23 percent of CDF or something much higher. We show here
24 that it's really a much lower contribution.
25 And they are not in the Level 2 now as

1 bypasses, but we would add this extra $4x10^{-11}$ to our
2 bypass sequences. Things would really be unchanged.
3 MEMBER ABDEL-KHALIK: Now, you indicated
4 that steam line breaks inside the containment are
5 really easy to handle, because globally somehow that
6 steam is going to condense and you're going to retain
7 inventory inside the containment. How about steam
8 line breaks outside containment?
9 MR. WACHOWIAK: A break outside
10 containment is considered, but the initiators on those
11 are -- tend to be very low because it starts with a
12 break and then you have to have a failure of isolation
13 before it's really a long-term loss of cooling.
14 MEMBER SIEBER: Isolation issue.
15 MR. WACHOWIAK: So the initiators on
16 those, which you get through the isolation, takes them
17 down out of consideration.
18 MEMBER SIEBER: Part of the redundancy and
19 technology.
20 MR. WACHOWIAK: And on the ones that were
21 involved. You know, the reactor water cleanup lines,
22 because the lines are so big and they go so many
23 places, the initiating event frequency is higher on
24 reactor water cleanups because of the length of the
25 pipe.

1 MEMBER SIEBER: Right.

2 MR. WACHOWIAK: We had the designers add

3 a third isolation valve into that system, so that even

4 though we have more pipe, the combination of pipe

5 break plus the failure of the isolation remains low

6 like the rest of them.

7 MEMBER SIEBER: Seems like there are quite

8 a few places where your Rev 0 PRA prompted you to make

9 some corrections. Is that correct?

10 MR. WACHOWIAK: The Rev 0 PRA, the

11 development of the Rev 0 PRA and some of the things

12 that still made it into the Rev 0 PRA prompted us to

13 make some design changes.

14 MEMBER SIEBER: Um-hum.

15 MR. WACHOWIAK: Other design changes were

16 prompted by other things. Some of them used

17 probabilistic arguments to make the design changes,

18 but not the CDF probabilistic argument. It's really

19 more of an investment protection probabilistic

20 argument.

21 MEMBER SIEBER: Okay.

22 MR. WACHOWIAK: And we'll get into that

23 one. Well, that's not the water level issue. What we

24 saw here is that even considering that water level

25 problem, we still had a very low CDF. So is this a

1 case where the PRA is going to require a change to the
2 plant or will something else -- we like the change.
3 I like the new change. We can talk about that.
4 MEMBER SIEBER: Well, that's an argument
5 for doing the PRAs early in the design process, if you
6 can, after you lose something and you're working in
7 that white band where you don't know too much about
8 it.
9 MR. WACHOWIAK: You can. At every phase
10 we will probably find something that we didn't think
11 about before.
12 MEMBER SIEBER: So you plan to keep
13 updating the PRA as the design becomes more firm and
14 final?
15 MR. WACHOWIAK: Yes.
16 MEMBER SIEBER: That's true. Okay.
17 MR. WACHOWIAK: In some cases where we
18 find some things that we may need to address, they
19 will come in in the base Level 1 model. They will
20 come in when we're trying to do the focus PRA for
21 RTNSS. And so every aspect of the design that is
22 perfectly fine in calculating our base core damage
23 frequency doesn't work out so nice in the RTNSS
24 calculation, we have got to circle back and do some of
25 those like the valve where we suggested moving to a

1 different fire area phase.

2 MEMBER SIEBER: Okay.

3 CHAIRMAN APOSTOLAKIS: Okay.

4 MR. WACHOWIAK: Anything else on

5 sequences?

6 CHAIRMAN APOSTOLAKIS: No.

7 MR. WACHOWIAK: Okay. I want to move to

8 the next section. We talked about some of this stuff

9 through now, but I think we passed this one out

10 earlier, the update and what we called information

11 exchange when we came out to see the staff a couple

12 weeks ago.

13 What was the hard break that we had to

14 take? Was it noon, noon to 3:00?

15 CHAIRMAN APOSTOLAKIS: Yes.

16 MR. WACHOWIAK: Okay. I will try to make

17 sure I'm at a break point here in 20 minutes. Okay.

18 What I want to talk about in this next section is the

19 Revision 2 of the PRA, what it is we're going to do

20 with Revision 2. That is probably what we'll cover

21 before lunch, and then I want to talk about the effect

22 of some major design changes that were done between

23 Rev 1 and Rev 2 of the DCD. It's not reflected in the

24 PRA yet and we'll talk about how that is going to all

25 fit together. Okay.

1 Now, in the base model of the PRA, and
2 what I mean by base model, this is the main -- what we
3 talked about earlier, the Level 1 model. Level 2 for
4 most internal events is what we base everything off
5 of.
6 We're including the isolation condenser
7 additional water volume. That is the major design
8 change that was done. We'll talk about it more in
9 detail, but we added water to the isolation condenser
10 during operation so that now, we don't need to run two
11 CRD pumps to keep the water level up. So we added
12 water into the isolation condenser system itself to
13 eliminate the need for the CRD. That will be included
14 in there.
15 That is probably going to be the biggest
16 change of everything because it changes the structure
17 of the event tree, the two larger event trees there.
18 And, as we saw, we're going to affect the top 90
19 percent of the cutsets by making this change. Okay?
20 The next thing that we're going to include
21 are the actual, I won't say actual just yet, but our
22 I&C architecture and requirements. We have selected
23 potential vendors for the different pieces of our I&C
24 system and so now we know what those systems are going
25 to be able to do. We have a set of requirements that

1 are out there for our I&C system and we have our
2 requirements set for the Diversity and Defense-In-
3 Depth. Those things will all now be factored into the
4 PRA model.
5 MEMBER SIEBER: Yes, right.
6 CHAIRMAN APOSTOLAKIS: How did you include
7 that I&C in the PRA?
8 MR. WACHOWIAK: How did we include it in
9 the PRA?
10 CHAIRMAN APOSTOLAKIS: Yes. I mean, we
11 should know how to do that. We better tell our
12 research staff, because they are spending a lot of
13 money trying to figure it out.
14 MR. WACHOWIAK: Okay. Maybe that gets us
15 to our hard break. There's two aspects to modeling
16 I&C.
17 CHAIRMAN APOSTOLAKIS: Right.
18 MR. WACHOWIAK: Okay? The first is the
19 hardware configuration, how does the signal get from
20 sensor into the I&C and then from -- once the decision
21 is made in the I&C, how does it get out to the field.
22 That piece of it is what we know how to model now.
23 The specifics of what is going on inside the brains of
24 the I&C system, which is the subject of the research,
25 at this point, we're treating as a simple common cause

1 failure.

2 A couple of things to consider with that.
3 One, we don't have a lot of control going on in this
4 ECCS system. It's a comparative threshold trip type
5 system. Maybe there are some timers put in there, a
6 square root here or there, some things like that, but
7 there is really not a lot of control systems with
8 feedback that can get us into multiple developed
9 states within the system that could do unpredictable
10 things.

11 So we don't think that this particular
12 type of I&C is going to be too far outside of being
13 able to be modeled with the simple common cause model.

14 CHAIRMAN APOSTOLAKIS: But that is common
15 cause. I mean, the number will come out where? What
16 is the number? Do you remember?

17 MR. WACHOWIAK: The number that we used in
18 the base PRA model is a 10^{-5} common cause failure of
19 all software.

20 CHAIRMAN APOSTOLAKIS: But there is no
21 basis for that, is there?

22 MR. WACHOWIAK: What we looked at for the
23 -- the basis for this is commercial software systems
24 like here, you know, in the banking systems. They
25 have got to have such reliability in their systems and

1 they design to that. We have to go through our
2 software design control. There is a process that is
3 going on within the human factors, I think they fall
4 under the human factors group, where a lot of this is
5 going to have to be discussed.
6 But I would agree that right now it's an
7 assumed number and what we need to do in some cases is
8 we need to look at --
9 MEMBER CORRADINI: Sorry I'm late.
10 MR. WACHOWIAK: -- sensitivity analyses
11 and that's part of our overall uncertainty picture.
12 But the good news is that we recognized that
13 uncertainty when we did the analysis for where the
14 diversity is required. So that is why when you read
15 the Diversity and Defense-In-Depth Report from ESBWR,
16 you will see that the diverse systems are connected
17 into many, many more functions than what we had
18 initially assumed in Rev 1.
19 So it will be attacking this one system
20 model. It has got some uncertainty to it, but we
21 think even with the uncertainty associated in it,
22 because of the diversity with the separate systems,
23 the diverse protection system would probably -- would
24 still be okay.
25 CHAIRMAN APOSTOLAKIS: So the argument

1 then would be based primarily on the sequences
2 themselves? You would have to have some huge common
3 cause failure for a lot of systems to be affected, but
4 I'm not sure that the numbers will mean anything. I
5 mean, what if I make the 10^{-5} 10^{-2}? Am I going to see
6 a CDF jump up by orders of magnitude?
7 And this is not -- when you say common
8 cause failure, you don't mean -- which common cause
9 failure is this? Is it over one particular system or
10 across the systems, because that would be really too
11 much. I think --
12 MR. WACHOWIAK: Yes, I understand the
13 problem. That is why it's a hard problem and research
14 is working on this now.
15 CHAIRMAN APOSTOLAKIS: That's right. I
16 would stay away from numbers personally, at this time,
17 and try to make arguments based on the sequences and
18 what goes where and maybe do a couple of sensitivity
19 studies, because then you would have to defend this
20 10^{-5} and I don't know where it came from. You said,
21 you know, the commercial software, but as far as I
22 know the databases are not there. And non-UPR people
23 in general do not worry about common cause failure.
24 MR. WACHOWIAK: Right, and maintenance
25 induced.

1 CHAIRMAN APOSTOLAKIS: Because there is no
2 ACRS to look over them.
3 MEMBER SIEBER: They don't have a lot of
4 the architectural features either, and I think you
5 have to know that before you can do anything.
6 MR. WACHOWIAK: Right.
7 MEMBER SIEBER: For example, is there
8 going to be a physical separation between protective
9 systems and engineered safety feature systems and
10 other control systems, three different systems or are
11 they going to be cross-connected? Are you going to
12 have hardwire elements in the protection system or
13 local modules, for example? You know, that has a big
14 impact on everything.
15 On the other hand, if you have multiple
16 trains of, for example, engineered safety feature
17 systems and you use the same software in every train,
18 then a failure in one will give you a failure across
19 the board, which is common cause.
20 MR. WACHOWIAK: Right.
21 MEMBER SIEBER: So there should be some
22 diversity there or at least some way around that.
23 MR. WACHOWIAK: And I think this afternoon
24 we can answer. We know enough to answer most of those
25 things at this point.

1 MEMBER SIEBER: I have more.

2 MR. WACHOWIAK: But some other things --

3 MEMBER SIEBER: I have a longer list than

4 what I said.

5 MR. WACHOWIAK: The longer list we may not

6 be able to, but that list we're pretty close on

7 things.

8 MEMBER SIEBER: All right.

9 MR. WACHOWIAK: So aside from -- I

10 understand the concern there and we're going to do

11 whatever is available.

12 CHAIRMAN APOSTOLAKIS: I think it would be

13 wise to stay away from numbers and bring the case

14 using qualitative arguments, what goes where, what

15 does it do to diversity and all that stuff.

16 MR. WACHOWIAK: Okay.

17 CHAIRMAN APOSTOLAKIS: Because, otherwise,

18 you know, you can have internal number of discussions,

19 why 10^{-5}, where did it come from, you know, and all

20 that. And the nature of failures there is different.

21 I mean, you're not really talking about a round of

22 failures anymore.

23 MR. WACHOWIAK: No, it's --

24 CHAIRMAN APOSTOLAKIS: Maybe specification

25 requirements, whatever.

1 MEMBER SIEBER: Right.

2 MR. WACHOWIAK: It's like one of those

3 mispositioning valve failures.

4 MEMBER ABDEL-KHALIK: But PG 1145 requires

5 the applicants to demonstrate that the software has

6 worked up to 95 percent, so it's hard to reconcile

7 that 95 percent confidence level required with a 10^{-5}

8 probability.

9 MR. WACHOWIAK: Yes. I'm still unsure of

10 what 95 percent confidence that the software is going

11 to work means either.

12 MEMBER SIEBER: Yes, I mean, if you look

13 at --

14 MR. WACHOWIAK: That's part of it.

15 MEMBER SIEBER: If you look at I&C

16 failures, in general, I think it's the transducers

17 that fail, the pressure sensors, the BP cells, the

18 temperature.

19 MR. WACHOWIAK: Right.

20 MEMBER SIEBER: You know, the physical

21 stuff as opposed to some piece of electronics in a

22 cool room and so forth.

23 MR. WACHOWIAK: And we can model those.

24 MEMBER SIEBER: Yes. Well, you already

25 have a long history because they are using analog

1 systems, too, and you have, you know, ICS.

2 MR. WACHOWIAK: In this update we expect

3 to have additional design detail for our valve to

4 plant systems that wasn't available before. We're

5 still working with the engineers to make sure that we

6 get everything we need. It's coming along, so

7 additional detail is correct as much as I had

8 expected, you know, a couple months ago maybe, but

9 that is going to be expanded.

10 CHAIRMAN APOSTOLAKIS: You have decided to

11 do these things on your own initiative or as a result

12 of interactions with the staff or a mix?

13 MR. WACHOWIAK: It's a mix.

14 CHAIRMAN APOSTOLAKIS: It's a mix.

15 MR. WACHOWIAK: This first one was not

16 interaction with the staff.

17 CHAIRMAN APOSTOLAKIS: Okay.

18 MR. WACHOWIAK: This one we knew we had to

19 do and we had some interaction with the staff on and

20 they want to see that. Additional detail for the BOP

21 systems, there was interaction with the staff.

22 CHAIRMAN APOSTOLAKIS: Right.

23 MR. WACHOWIAK: Once again, we already

24 knew we needed to do that. The next one is in the

25 common cause area. We'll talk about this a little bit

more. We're going to switch from the alpha method to an MGL method. It is supported in our PRA software and the things that we'll talk about a little bit later. The things we talked about is uncertainty in the parameters and other things like that. We'll be able to do that.

CHAIRMAN APOSTOLAKIS: That's interesting, because I thought the alpha model was supposed to be the latest and the bestest. Did the staff ask you to do this?

MR. WACHOWIAK: No.

CHAIRMAN APOSTOLAKIS: It's convenience in using codes?

MR. WACHOWIAK: It's convenience with codes and the ability to interpret the answers and make sure that we can do the right kind of sensitivity and uncertainty analysis that we want to do. We just have difficulty with making --

CHAIRMAN APOSTOLAKIS: I know. A lot of people do.

MR. WACHOWIAK: Yes. So we think this is the whole straightforward way forward.

CHAIRMAN APOSTOLAKIS: I checked, by the way, one of your numbers that you have for common cause failure using the MGL and numerically you get

1 roughly the same number, so it's not --

2 MR. WACHOWIAK: Okay.

3 CHAIRMAN APOSTOLAKIS: This is not going

4 to be a major change in the numbers, I don't think.

5 MR. WACHOWIAK: No. I wouldn't expect

6 this, in particular, to be a major change in the

7 numbers.

8 CHAIRMAN APOSTOLAKIS: But sequencing

9 maybe.

10 MR. WACHOWIAK: But where we get the

11 parameters from may change some of the numbers.

12 CHAIRMAN APOSTOLAKIS: Conceptually, the

13 MGL parameters are easier to understand.

14 MR. WACHOWIAK: Right.

15 CHAIRMAN APOSTOLAKIS: The alpha stuff is

16 complicated.

17 MR. WACHOWIAK: And it's also harder with

18 the alpha stuff if we want to make a change like for

19 the rest of the PRA. You have to kind of redo

20 everything --

21 CHAIRMAN APOSTOLAKIS: That's right.

22 MR. WACHOWIAK: -- when you want to do

23 those. So it was just more difficult to work with.

24 We're going to try to do this. We believe it will be

25 straightforward.

1 We talked a little bit about this. We
2 have detailed in our top logic that I would like to
3 split into the event trees to make understanding the
4 sequences easier. This is really a personal
5 preference.
6 CHAIRMAN APOSTOLAKIS: What is your top
7 logic?
8 MR. WACHOWIAK: For example, in the event
9 trees you will find VFL. It's a top. It's FAPCS and
10 fire water panels. I would like those to be split
11 into two separate tops.
12 CHAIRMAN APOSTOLAKIS: Oh, okay.
13 MR. WACHOWIAK: And then you know which
14 branch you're on. You're either on an FAPCS branch or
15 you're on a fire. But even though they are
16 functionally the same thing, you need to -- it's just
17 I find it easier if you have that split out.
18 The event tree, what that will do I think
19 for reviewers is it will force the event trees to be
20 split onto more than one page, which everybody will
21 like because now you can't read them on one page
22 anyway. So since it is being forced to being split
23 amongst pages, you will be able to see everything
24 better.
25 Eliminate sequence-specific logic flags.

1 We have gone through this, that a lot of the plants do
2 this for their A-4 models. We have a way of using our
3 initiator impacts to address it. It's a procedural
4 thing within the logic. It should make things easier
5 to review and you won't have these big blank tables
6 that you have to look at to make sure we're consistent
7 all the time.
8 As we said before, add that Class II
9 sequences into the base model. We want to reconcile
10 component names with the DCD. This is something that
11 we presented in Rev 0 when we first talked about that,
12 you know, a year or more ago that we knew was the case
13 and now is just a convenient time to fix this.
14 When we built the initial PRA model, the
15 system designers hadn't named their components yet, so
16 we in the PRA named it for them the best we could.
17 And when they went through and actually did the design
18 of the systems, they were slightly different than what
19 we came up with. At this point it's convenient.
20 Because of our changes that are also going
21 on that change the names of components in the plant,
22 we're going to reconcile all this now, so that if you
23 see a name of a component in the DCD, it's going to
24 have the same name in the PRA. But it means some of
25 the things you see in the PRA now may be moved to a

1 different name, so we'll have to work on something
2 along that and some sort of a translation table, at
3 least initially.
4 Part of the Class II include those
5 sequences in the large release frequency, we talked
6 about that, and then other design detail as
7 information becomes available. So the designers
8 continue to work on adding detail to their systems.
9 If it's useful to us and it comes in in time, we'll
10 use it.
11 Other things that we want to have in this
12 is our basic event naming convention may change
13 slightly. It shouldn't be that big of an impact.
14 What we have found is that in the URD database,
15 certain systems like for a motor-driven pump, there
16 are several different motor-driven pumps that there is
17 data for. You know, if it's a service water pump or
18 if it's some kind of safety injection pump, different
19 data. Our initial model just used one basic event
20 name for motor-driven pump and we just used factors to
21 adjust the data.
22 CHAIRMAN APOSTOLAKIS: I don't think that
23 these details are of interest to the subcommittee.
24 MR. WACHOWIAK: Okay.
25 CHAIRMAN APOSTOLAKIS: Let's go to

1 something more substantial.

2 MR. WACHOWIAK: Lunch.

3 CHAIRMAN APOSTOLAKIS: Like lunch, so --

4 MR. WACHOWIAK: Now, I think this would be

5 a convenient time for lunch.

6 CHAIRMAN APOSTOLAKIS: Yes, okay.

7 MR. WACHOWIAK: Because the next thing is

8 to go through and really explain what that water level

9 change was and what that says in the model.

10 CHAIRMAN APOSTOLAKIS: Very good. Thank

11 you, Rick. So we will reconvene at 3:00.

12 (Whereupon, the meeting was recessed at

13 11:58 a.m. to reconvene at 3:04 p.m. this same day.)

14

15

16

17

18

19

20

21

22

23

24

25

A-F-T-E-R-N-O-O-N S-E-S-S-I-O-N

3:04 p.m.

CHAIRMAN APOSTOLAKIS: Okay. We're back in session.

MR. WACHOWIAK: I hope everybody had a good lunch.

CHAIRMAN APOSTOLAKIS: Okay, Rick.

MR. WACHOWIAK: Okay. Where we left off at before lunch, I was going to go through some of the sort of more significant design changes that we have made to the plant since we have created Rev 1 of the PRA model. These design changes are not in anything that you have at this point. As a matter of fact, they were recently approved, but they are in Rev 2 of the DCD that you should have available, so they are written up. They just haven't gotten to the PRA yet.

We talked about a little bit of this this morning, so hopefully on this particular one we can get through here. We talked about the water level issues and I have a couple of graphs here that are in your package. What we used to have, this is a loss of feedwater in Rev 1 of the -- let's see. Hopefully, this is going to be large enough. You have this.

This was a Level 1.5 here. The loss of feedwater above isn't as bad as a loss of off-site

1 power then, but it illustrates the issue. The water
2 level in this scenario initially drops below Level 1.5
3 and the timer starts and in order to get water back up
4 above this Level 1.5 in time to get rid of the -- to
5 clear the signal, we have to have two CRD pumps.
6 It looks here like the slope will allow
7 only one CRD pump to operate and be able to clear that
8 in the time frame that we have, but we know in those
9 cases, and the dynamics of the early part of the
10 scenarios, just won't allow it.
11 MEMBER WALLIS: Can I ask a question since
12 we're now here?
13 MR. WACHOWIAK: Okay.
14 MEMBER WALLIS: I read about the feedwater
15 and CRD injection. It talks about one SBW pump and
16 one common pump and so on. And then it said that if
17 SBW fails to keep the level above Level 2 CRD
18 injection initiates, this is described in the PRA,
19 right?
20 MR. WACHOWIAK: Yes.
21 MEMBER WALLIS: But does the PRA run a
22 fully hydraulic code in order to know what the water
23 level is? How does it know what is happening at the
24 water level?
25 MR. WACHOWIAK: We look at the water level

1 using various tools.

2 MEMBER WALLIS: And how does the PRA know

3 what the water level is?

4 MR. WACHOWIAK: How does the PRA? It is

5 based on the initiating event.

6 MEMBER WALLIS: But it doesn't, because it

7 depends on whether or not the levels are -- it says if

8 it fails to keep. You're implying that it might or it

9 might not reach Level 2. So how does the PRA know if

10 you have reached Level 2 or not?

11 MR. WACHOWIAK: Okay. In this particular

12 scenario, which is called a loss of all feedwater, we

13 know.

14 MEMBER WALLIS: Yes, the CRD does it.

15 MR. WACHOWIAK: We know for a fact that in

16 the loss of all feedwater that the water level drops

17 below Level 2, which is right around here.

18 MEMBER WALLIS: If it does?

19 MR. WACHOWIAK: No, it does.

20 MEMBER WALLIS: You know that it does?

21 MR. WACHOWIAK: In a loss of feedwater

22 event, because of that initiator, we know it does. In

23 a loss of off-site power, we know it does, because in

24 a loss of off-site power, the feedwater pumps trip

25 immediately.

1 MEMBER WALLIS: So if you have one
2 feedwater pump, it does?
3 MR. WACHOWIAK: If you have no feedwater
4 pumps, it does. If you have one feedwater pump, it
5 doesn't.
6 MEMBER WALLIS: It does or doesn't?
7 MR. WACHOWIAK: It does not.
8 MEMBER WALLIS: But, you see, the problem
9 is when I read the text, it says if it fails to. I
10 mean, how do you know if it does or doesn't? You have
11 already done all these scenarios, so you have to put
12 that into this.
13 MR. WACHOWIAK: Yes.
14 MEMBER WALLIS: Then you -- there is no
15 ambivalence about it, I mean?
16 MR. WACHOWIAK: Where were you reading
17 from? Were you reading from --
18 MEMBER WALLIS: Page 3.3-4.
19 MR. WACHOWIAK: 3.3-4? Is that under a
20 generic transient?
21 MEMBER WALLIS: U1CF.
22 MR. WACHOWIAK: U1CF. That is --
23 MEMBER WALLIS: This occurs several times
24 in all this PRA, so it's as if the levels above so-
25 and-so, then it's successful. I just don't know how

1 the PRA knows.

2 VICE CHAIRMAN SHACK: Well, you take the
3 branches in the event trees and you're doing the
4 calculations.

5 MEMBER WALLIS: Well, it depends on how
6 effective. It may depend on initial conditions and so
7 on. It may not be determinate.

8 MR. WACHOWIAK: That is exactly correct.

9 MEMBER WALLIS: So what do you do?

10 MEMBER CORRADINI: The PRA gives you the
11 branch point event.

12 MEMBER WALLIS: Well, how do you know
13 which way to go if you don't know what the level is?
14 That's the thing.

15 MR. WACHOWIAK: The way that we break up
16 the PRA model, we break it up into different sequences
17 that behave --

18 MEMBER WALLIS: I understand that.

19 MR. WACHOWIAK: -- similarly.

20 MEMBER WALLIS: I understand that, but you
21 don't know which way to go unless you know what the
22 level is. Until there is a level, you're running
23 thermal-hydraulic codes.

24 MR. WACHOWIAK: Yes. For loss of
25 feedwater -- so for those things that act like a loss

of feedwater --

MEMBER WALLIS: Right.

MR. WACHOWIAK: -- we would run thermal-hydraulic codes separate.

MEMBER WALLIS: Alongside the PRA?

VICE CHAIRMAN SHACK: No, separately.

MEMBER WALLIS: Oh, separately.

VICE CHAIRMAN SHACK: Yes, separately.

MEMBER WALLIS: Oh, no, you can't do that.

VICE CHAIRMAN SHACK: Sure you can.

MEMBER WALLIS: Well, you can. You simply couldn't.

MR. WACHOWIAK: He likes to finish that statement.

MEMBER WALLIS: Not real time.

MEMBER CORRADINI: Think of it like definitional boundary conditions that the PRA or the event tree sets up the initial boundary conditions.

MEMBER WALLIS: And those were cleared to go.

MEMBER CORRADINI: Right. And then they with a set of initial boundary conditions run a deterministic calculation to see how the accident evolves.

MEMBER WALLIS: Oh, so you run it at the

same time.

MEMBER CORRADINI: His answer was if all the pumps are off, deterministically he knows where the water level is.

MEMBER WALLIS: Well, this isn't deterministic. It really isn't deterministic.

PARTICIPANT: That's correct.

MEMBER CORRADINI: Well, it is.

VICE CHAIRMAN SHACK: The thing that's probabilistic is whether you take this path or that path.

MEMBER WALLIS: Well, it depends on initial conditions. I mean, the beginning of a cycle, end of a cycle are things that make a difference.

VICE CHAIRMAN SHACK: Right. You assign that frequency.

MR. WACHOWIAK: Those are all correct things that we have handled by bending these together. We have looked and for this particular case, beginning a cycle or end a cycle, it doesn't make any difference.

For a loss of feedwater, you always have the low level. And so if you looked in the loss of feedwater tree, which I have the simplified one from the earlier package, but you also have the monster one

1 there, you won't see U1CF, that heading, in the loss
2 of feedwater tree. That heading is applicable to
3 other trees that have the feedwater system considered.
4 MEMBER WALLIS: Well, I guess I won't
5 spend a lot of time on it. Lots of times in this
6 discussion on all these -- lots of these scenarios
7 where it said if the water level is above so-and-so
8 then, but I'm saying, well, how do you know that? The
9 question arose every time I saw that.
10 MR. WACHOWIAK: And in those particular
11 cases where we have considered feedwater, what we look
12 at is the probability that feedwater worked or the
13 probability that feedwater didn't work. So we know
14 deterministically if feedwater worked, then the water
15 level won't reach the Level 2. We know
16 deterministically that if feedwater doesn't work, it
17 will reach water level 2. That's just how you apply
18 this.
19 MEMBER WALLIS: So the same thing with
20 this. Well, I don't know much of where you are here,
21 but as an RWC USTC system, it says the function is
22 affected only if the reactor water level is recovered
23 at normal level above Level 3.
24 MR. WACHOWIAK: Yes.
25 MEMBER WALLIS: Well, again, how do you

1 know whether or not it is? So here is my question all
2 the way through.
3 MR. WACHOWIAK: Okay.
4 MEMBER WALLIS: Now I have got to shut up.
5 MR. WACHOWIAK: I'm trying to figure out
6 how to explain that in a short way.
7 MEMBER WALLIS: Yes, but --
8 MR. WACHOWIAK: But if you follow the
9 sequences in the event tree --
10 MEMBER WALLIS: Some of this has --
11 nothing is affected by -- okay. But in reality, you
12 might go either way depending on the level being
13 somewhat different, because there are uncertainties in
14 the thermal-hydraulics and uncertainties in your
15 initial condition.
16 MEMBER SIEBER: You make them uncertain.
17 MR. WACHOWIAK: Yes.
18 MEMBER WALLIS: So it's sort of simplistic
19 to say that you know which way to go.
20 MR. WACHOWIAK: To make them uncertainties
21 you can, and then we do sensitivity studies to
22 determine if --
23 MEMBER WALLIS: Okay. Or it may go the
24 other way, or it might go the other way.
25 MR. WACHOWIAK: -- you make the right

1 decision. Yes.

2 MEMBER WALLIS: Okay. Thank you. Thank

3 you. Okay.

4 MEMBER ABDEL-KHALIK: So, presumably,

5 these supporting calculations are best estimate

6 calculations?

7 MR. WACHOWIAK: In the PRA they are

8 supposed to be best estimate calculations. However,

9 as we talked earlier this morning, at this stage of

10 the design we don't know necessarily that it's the

11 best best estimate.

12 MEMBER WALLIS: It never is, no.

13 MR. WACHOWIAK: It's the best estimate

14 that we can get today.

15 MEMBER WALLIS: Right.

16 MEMBER SIEBER: Knowing what you don't

17 know.

18 MR. WACHOWIAK: Knowing what we --

19 MEMBER SIEBER: Don't know.

20 MR. WACHOWIAK: Yes. So this would be --

21 MEMBER WALLIS: That's why some of the

22 correlations are 50 years-old, is it?

23 MR. WACHOWIAK: Don't go there. So this

24 is -- it must have been a very nice lunch.

25 MEMBER WALLIS: I didn't get any lunch.

MEMBER CORRADINI: That's why he's upset.

MR. WACHOWIAK: So what we need to do or what we needed to do was fix this. Now, the reason why we went there in the plant has more to do with investment protection than it does with core damage prevention. With the core damage frequency, you know, the way we estimated that sequence at, approximately, $2x10^{-8}$, you probably -- we probably could have lived with it in the PRA space.

However, on the plant side, using the depressurization system when it's really not -- when it's best not to use it is something to be avoided. And what we would like to do and we are working toward doing is providing protections in the plant to ensure that an unnecessary depressurization won't happen in the life of the plant.

MEMBER WALLIS: Now, you said CDF 10^{-8}?

MR. WACHOWIAK: For that particular sequence.

MEMBER WALLIS: This is for that particular sequence?

MR. WACHOWIAK: Yes.

MEMBER WALLIS: And what is the total CDF you're saying now? $3x10^{-8}$.

MR. WACHOWIAK: $3x10^{-8}$.

1 MEMBER WALLIS: The total CDF?

2 CHAIRMAN APOSTOLAKIS: Yes.

3 MR. WACHOWIAK: Yes.

4 MEMBER WALLIS: For everything?

5 CHAIRMAN APOSTOLAKIS: For that test.

6 MEMBER WALLIS: For everything?

7 CHAIRMAN APOSTOLAKIS: For that test, yes.

8 MR. WACHOWIAK: No, no, no, for Level 1

9 internal events.

10 CHAIRMAN APOSTOLAKIS: Level 1 internal

11 events.

12 MEMBER WALLIS: Internal events?

13 MR. WACHOWIAK: Yes.

14 MEMBER WALLIS: Well, I noticed throughout

15 this whole document there are a lot of things you have

16 discarded with qualitative arguments. You have sort

17 of said this is unlikely to happen and so on without

18 any explanation. Well, 10^{-8} is a pretty small number

19 throughout things without any explanation. I wonder

20 how the Committee responded. Did they ask you that

21 question yet?

22 MR. WACHOWIAK: Not yet.

23 MEMBER WALLIS: There is a whole pile of

24 places where you qualitatively throw out a scenario.

25 You say there is one case where, you know, the

1 operators will never make a mistake sort of thing.
2 Well --
3 MR. WACHOWIAK: I don't think we have
4 numbers for that.
5 MEMBER WALLIS: With that particular
6 scenario, with that particular scenario.
7 CHAIRMAN APOSTOLAKIS: Independent
8 failures.
9 MEMBER WALLIS: Okay. Well, we'll come
10 back to that.
11 MR. WACHOWIAK: Yes, we can come back to
12 that.
13 CHAIRMAN APOSTOLAKIS: Seemed like, you
14 know, the shutdown PRA where you have two or three
15 independent failures that we have to assume is sort of
16 now part of --
17 MEMBER WALLIS: There is a whole other
18 part.
19 CHAIRMAN APOSTOLAKIS: -- sort of
20 reliability of one.
21 MR. WACHOWIAK: That would be internal use
22 of blanket --
23 CHAIRMAN APOSTOLAKIS: There's a lot of
24 other things like that, I mean.
25 MR. WACHOWIAK: -- to shutdown cooling

1 water and flooded out. If we triple up, we have 30 or
2 40 hours to recover before it hits level, so we would
3 discount that.
4 MEMBER WALLIS: See, I don't like the
5 water level, the reactor water level.
6 MR. WACHOWIAK: So the idea was how can we
7 set this up so that in the life of the plant, of one
8 of these plants, it is very unlikely for
9 depressurization to happen any time other than a LOCA,
10 because a LOCA you have already had other problems.
11 Depressurizing just gets you -- gets the system and
12 everything stable. You have the investment protection
13 issue. If it's not a LOCA, how do we prevent that?
14 So what we have done is we have made a
15 design change and I will give you the answer to what
16 happened with the design change first, and then we'll
17 go back and say specifically what was the design
18 change and that would be the Rev 2, DCD Rev 2 version
19 of this scenario.
20 You can see we got rid of Level 1.5
21 because it's not needed anymore, and we'll talk about
22 why that is in just a second. So we switched back to
23 just having a Level 1 that is the LOCA signal. The
24 water level doesn't drop far enough in the LOCA to get
25 to the Level 1, so that it is never challenged with

1 the scenario. This one still shows the CRD pumps
2 running like this.
3 MEMBER WALLIS: Where is the core in that
4 picture?
5 MR. WACHOWIAK: The core is at zero.
6 MEMBER WALLIS: At zero. Okay.
7 MR. WACHOWIAK: In this particular one.
8 The axis here is liters above TAF.
9 MEMBER CORRADINI: So just so I have got
10 the picture in my mind. This is a cigar and the core
11 is at the bottom of the cigar like the label is?
12 MR. WACHOWIAK: Right, yes.
13 VICE CHAIRMAN SHACK: With a lot of water.
14 MR. WACHOWIAK: Right. And we have done
15 that for various reasons, the main reason being you
16 need the big head difference to drive the natural
17 circulation flow in the plant. So the height is to
18 allow us to have natural circulation, but it helps in
19 these scenarios. So there's hundreds of cubic meters
20 of water that have to go away before you run into
21 certain issues.
22 MEMBER CORRADINI: So just to say it back,
23 so that I understand it, you got rid of the signal at
24 below the blue line.
25 MR. WACHOWIAK: Right.

1 MEMBER CORRADINI: So that you link to the
2 spurious actuation?
3 MR. WACHOWIAK: Right. Now, no, it's not
4 a spurious actuation. It was a potential LOCA that we
5 couldn't resolve within the time frame that we had.
6 So in design basis space, what we say is if we might
7 have a LOCA and we're not sure, we'll tell the ECCS
8 system to act like it is a LOCA. That's the -- in
9 deterministic space, that is the conservative thing to
10 do.
11 MEMBER SIEBER: Right, and then give it a
12 LOCA.
13 MR. WACHOWIAK: And then give it a LOCA.
14 VICE CHAIRMAN SHACK: Give it a LOCA when
15 it --
16 MR. WACHOWIAK: Well, you create -- it's
17 a specially engineered LOCA that is very easy to
18 handle with our --
19 VICE CHAIRMAN SHACK: I understand.
20 MR. WACHOWIAK: -- safety features.
21 VICE CHAIRMAN SHACK: Okay.
22 MEMBER WALLIS: Now, but this is a level
23 you're showing here?
24 MR. WACHOWIAK: This is -- the downcomer
25 level is blue.

1 MEMBER WALLIS: And you're measuring this
2 level?
3 MR. WACHOWIAK: Yes.
4 MEMBER WALLIS: And there is a discussion
5 in the PRA about reactor water level instrumentation
6 failure, spurious high, which seems to me a very bad
7 thing to have. I think, there is water there and
8 there isn't maybe, and then you dismiss the whole
9 thing qualitatively without ever evaluating anything.
10 You just say don't consider this in the PRA, although
11 it seems to me a very significant thing to happen.
12 You just sort of talk about how it's
13 unlikely and so on and it's not considered, but isn't
14 that a very important thing to know the level? I
15 mean, all kinds of things actuate on the level and so
16 on.
17 MR. WACHOWIAK: That's correct. We're
18 talking about changes that are going on in Revision 2.
19 We have details, enough details of the instrument and
20 control system now that we can put in those types of
21 failure modes and be able to deal with that
22 probability.
23 MEMBER WALLIS: Oh, so you're going to put
24 that in?
25 MR. WACHOWIAK: We're putting that in.

1 MEMBER WALLIS: So a lot of things which
2 are not qualitative, which will be quantitative later
3 on?
4 MR. WACHOWIAK: Will be quantitative, and
5 then you will be able to see that it's not going to be
6 a concern.
7 MEMBER WALLIS: So how long is it before
8 it's finished?
9 MEMBER SIEBER: But it's not in your
10 report here.
11 MR. WACHOWIAK: You're jumping ahead of
12 this.
13 MEMBER WALLIS: Well, I'm concerned
14 because I reviewed a long CD about, I don't, about
15 three months or four months ago or something and then
16 it all changed and I got this one. Am I going to get
17 another one?
18 MR. WACHOWIAK: Yes, you are. It's a
19 dirty document.
20 MEMBER WALLIS: It's very difficult when
21 sections are 1,000 pages long and you keep changing
22 them.
23 CHAIRMAN APOSTOLAKIS: Maybe next time,
24 Rick, you can send us also a couple of pages pointing
25 to where the changes have been made, because we had to

1 look this stuff.

2 MEMBER WALLIS: The change is tremendous

3 in organization.

4 CHAIRMAN APOSTOLAKIS: In the PRA, if you

5 submit a Rev 2.

6 MR. WACHOWIAK: You didn't get the version

7 with the revision bars?

8 MEMBER WALLIS: No.

9 CHAIRMAN APOSTOLAKIS: What do mean with

10 a revision, where the revisions were identified?

11 MR. WACHOWIAK: Where they were

12 identified.

13 MEMBER WALLIS: No, nothing like that.

14 CHAIRMAN APOSTOLAKIS: No.

15 MEMBER WALLIS: No, I had to hunt all over

16 the place to find the revision.

17 CHAIRMAN APOSTOLAKIS: So we're looking

18 all over the place.

19 MR. WACHOWIAK: Okay. Well, there was a

20 version that had those identified. We'll make sure

21 that you have that and we're also going to use the

22 same process that a DCD uses where we're -- where we

23 have a change list that will go along with it. That

24 wasn't asked. Nobody asked for that, the list in the

25 first time, but we did send the version with the

1 revision bars.

2 CHAIRMAN APOSTOLAKIS: So what do you mean

3 revision bars?

4 MR. WACHOWIAK: It's on the side of the

5 page.

6 CHAIRMAN APOSTOLAKIS: On the side of --

7 so I have to go through the whole PRA to find the

8 lines? No, that's not what I mean.

9 MR. WACHOWIAK: Okay.

10 CHAIRMAN APOSTOLAKIS: I mean you will

11 tell me in Section 5, you know, this is -- what you

12 call a section, which is a whole thing, page such-and-

13 such or subsection such-and-such, there have been

14 changes, so I can go. Otherwise, you --

15 PARTICIPANT: That's a change list.

16 MR. WACHOWIAK: Okay. We already

17 committed to this that we'll be -- in Rev 2 we will be

18 providing the change list along with it.

19 CHAIRMAN APOSTOLAKIS: Okay. Now it's the

20 bars?

21 MR. WACHOWIAK: We did not do that in Rev

22 1.

23 MEMBER WALLIS: Well, sometimes it's not

24 just the changes. It needs to be change of

25 organization, why things are moved around, and that is

how the --

MR. WACHOWIAK: That shouldn't happen anymore with things moving around.

MEMBER WALLIS: Okay.

MR. WACHOWIAK: We're done moving around.

MEMBER SIEBER: We get paid by the hour. It's okay.

CHAIRMAN APOSTOLAKIS: So change the whole thing next time, so we'll make an extra $16.

MEMBER CORRADINI: So that when you remove the signal, that then logically says to you that you now decrease the chance of not a spurious actuation, but an actuation where you now are deciding you don't want it?

MR. WACHOWIAK: Yes.

MEMBER CORRADINI: I'm still trying to get through the logic.

MR. WACHOWIAK: Right. If there is no LOCA, we don't want the depressurization unless all the active systems fail. Okay? And what we were in a situation before was we couldn't wait for all the active systems to fail. We had to assume the LOCA earlier than that before we had knowledge that everything failed.

So the water level drop here is nearly the

same, as you can see from the other one. That is not what changed. When we added, and I will get back to the specific parts of the change again in a minute, what we did was we added tanks into the ICS system that essentially puts in an additional 27 cubic meters of water when the isolation condensers initiate.

So what that allows is it allows the LOCA signal, the upper limit of the LOCA signal when the instrument uncertainties are concerned, to be moved away from that Level 1.5 now down all the way to the Level 1 range. And, now, we have a Level 1 that indicates all LOCAs instead of only a subset of LOCAs.

So the change that we made didn't really affect the water level very much. It affected it by a small amount, but changing that allowed the setpoint to be moved out of the way, so that we don't get the actuation that we don't want.

MEMBER ABDEL-KHALIK: So this initial drop in the loss of all the feedwater is primarily going to shrink?

MR. WACHOWIAK: It's --

MEMBER ABDEL-KHALIK: Or is it --

MR. WACHOWIAK: It's a manometric equalization. When -- yes, on the sheet that I gave you today it had -- well, I had -- when I did my

1 little back of the envelope calculation, I had two
2 values. One is inside the shroud and one is outside
3 the shroud. Inside of the shroud is mostly steam.
4 The average steam void fraction in the chimney area is
5 about 80 percent. And so you have the shroud which
6 has all this water here and then there is a steam
7 mixed area in here.
8 MEMBER WALLIS: And all the levels measure
9 the --
10 MR. WACHOWIAK: Turn the feedwater off.
11 MEMBER WALLIS: Aren't the levels measured
12 outside?
13 MR. WACHOWIAK: The water level is
14 measured out. BWR is measured on the outside.
15 MEMBER SIEBER: Extremely short time.
16 MR. WACHOWIAK: Right.
17 MEMBER SIEBER: I mean, that makes
18 everything drop.
19 MR. WACHOWIAK: So it's not really shrink.
20 It's a collapse of the voids.
21 MEMBER WALLIS: That's correct.
22 MR. WACHOWIAK: Okay. So we go back to --
23 CHAIRMAN APOSTOLAKIS: Before we go on,
24 does any Member have a cell phone on the table? It's
25 interfering with the reporter's --

1 MEMBER WALLIS: Maybe it's somebody's
2 brain that is overactive.
3 PARTICIPANT: All the brains are off.
4 MEMBER WALLIS: Maybe your's.
5 MEMBER SIEBER: Turn mine off.
6 PARTICIPANT: We have never had this
7 problem before. Could you check?
8 CHAIRMAN APOSTOLAKIS: Are you okay now?
9 COURT REPORTER: No, it got worse.
10 MEMBER WALLIS: It got worse?
11 CHAIRMAN APOSTOLAKIS: It got worse?
12 COURT REPORTER: It's better just now.
13 CHAIRMAN APOSTOLAKIS: Is the computer
14 perhaps doing it?
15 COURT REPORTER: I don't -- it wouldn't be
16 the computer.
17 MEMBER SIEBER: Mine went to sleep.
18 MEMBER WALLIS: I don't have a cell phone.
19 MEMBER SIEBER: Maybe it's having a
20 nightmare.
21 COURT REPORTER: It's better now. Thanks.
22 CHAIRMAN APOSTOLAKIS: It's better now?
23 COURT REPORTER: Yes.
24 CHAIRMAN APOSTOLAKIS: Oh, it was Eric.
25 MR. THORNSBURY: Well, everybody turned

1 theirs off, so it might have been.

2 MR. WACHOWIAK: So, like I said, we added,

3 and I will show how in a second, 9 cubic meters of

4 water per isolation condenser that allows us to

5 optimize the Level 1 signal for ECCS. Now, we don't

6 need to have CRD to prevent depressurization in the

7 loss of feedwater events and if we remember from this

8 morning, about 90 percent of the cutsets involved

9 loss of feedwater or loss of off-site power with

10 results in loss of feedwater, plus the loss of CRD,

11 control rod drive.

12 And for the people that are new to ESBWR,

13 our control rod drive system also acts as a high

14 pressure injection system. They are not small pumps.

15 We have two 500 gpm pumps that are our CRD pumps, so

16 they are very large CRD pumps. And, as we said in the

17 morning, I think up to -- we could handle a hole in

18 the vessel, liquid out of the break, a hole in the

19 vessel up to 25 millimeter diameter, so a 1 inch line

20 break can be completely made up by this pump.

21 CHAIRMAN APOSTOLAKIS: I think this

22 morning we agreed that in your reporting that the loss

23 of CRD is primarily due to human error, right,

24 forgetting mispositioning the valve?

25 MR. WACHOWIAK: Mispositioning the valve.

1 CHAIRMAN APOSTOLAKIS: I mean, I'm
2 wondering now if this is okay, if you do a PRA for an
3 existing facility and it's an assessment of whether
4 the -- but this now, the PRA here is used to optimize
5 things. Why do you have to live with that? I mean,
6 there must be something you can do to make sure that
7 probability is very low.
8 MEMBER SIEBER: Yes.
9 MR. WACHOWIAK: But that particular case
10 that we have is --
11 CHAIRMAN APOSTOLAKIS: What do they do?
12 MR. WACHOWIAK: What we have done is we
13 have an interface on the project now with the human
14 factors engineers.
15 CHAIRMAN APOSTOLAKIS: Oh.
16 MR. WACHOWIAK: The human factors
17 engineers, when they are in the process of developing
18 their procedures list, will get that. If we kept that
19 as a high sequence, they would get that sequence and
20 say, oh, look, these mispositioning of these valves
21 after tests or maintenance is very important.
22 When we write the procedures, we need to
23 make sure that we write it with independent
24 verifications in there. We need to have in the
25 training identified that this is important, these are

1 the important scenarios that they need to look for.
2 So it gets factored into the HFE program.
3 Then after all those things have been
4 developed and we can evaluate them and watch some
5 operator training and watch some other things, in a
6 future revision of the PRA we can go through the HRA,
7 Human Reliability Analysis, like we normally would and
8 identify that those probabilities are much smaller.
9 CHAIRMAN APOSTOLAKIS: This is how to
10 update the PRA. I mean, yes, it's nice to have an
11 updated PRA, but the whole idea here is not to make
12 sure that you have a good PRA. The whole idea is to
13 make sure you have a good design. So if you do all
14 this, why would you want to have a statement that CRD
15 is not needed? I mean, do things to the ICS.
16 I mean, it will be needed, but the
17 probability of it not being available would be very
18 low. I'm missing something here or -- because you
19 seem to be making changes to the plan assuming that I
20 have to live with this probability of the loss of CRD
21 and you just told us that you don't have to live with
22 it. You can certainly reduce it.
23 MR. WACHOWIAK: We can reduce it, but it
24 won't go away. The probability of core damage due to
25 this is low. If we left things the way they were and

1 fixed the procedural---

2 CHAIRMAN APOSTOLAKIS: Would still be low.

3 MR. WACHOWIAK: -- and fixed the

4 procedural action and just looked at mechanical

5 failures in CRD, so a typical diesel generator failure

6 following a loss of off-site power or a typical pump

7 failure, those sorts of things, the kind of numbers

8 that we were coming up with was about a 3 percent

9 chance of depressurizing the plant in the lifetime of

10 the plant without a LOCA. So there is a 60 year

11 lifetime, a 3 percent chance that we would

12 depressurize the plant.

13 CHAIRMAN APOSTOLAKIS: Right.

14 MR. WACHOWIAK: We can't live with that,

15 because the restoration cost from one of these events

16 is just like the restoration cost of a LOCA.

17 CHAIRMAN APOSTOLAKIS: I'm sorry, maybe I

18 missed. Even if you reduced the human error

19 probability?

20 MR. WACHOWIAK: Yes. When we did that

21 calculation to determine the likelihood of having the

22 undesired actuation, we did it based on the hardware

23 failures not on the human actions.

24 CHAIRMAN APOSTOLAKIS: So where did this

25 3 percent probability come from?

MR. WACHOWIAK: If we look at the probability of a loss of off-site power, the probability of a failure of one diesel or the failure of one CRD pump or the failure of one injection valve, so like three failure probabilities right there, taken over a 60 year operating mission time.

CHAIRMAN APOSTOLAKIS: And that is 3 percent for the whole period?

MR. WACHOWIAK: For the whole period.

CHAIRMAN APOSTOLAKIS: And you think that's unacceptable?

MR. WACHOWIAK: For something that would have the same cost consequences as a LOCA, we thought that was unacceptable.

MEMBER CORRADINI: So can I say that back to you just so I understand? So if the probability was $5x10^{-4}$, that's a 3 percent contribution over a 60 year life?

MR. WACHOWIAK: Yes.

MEMBER CORRADINI: And that is, essentially, those numbers you had in the overview, Section 1, where it was the accidental initiation button, whatever they are called, but these valves?

MR. WACHOWIAK: Right.

MEMBER CORRADINI: Okay. Thank you.

1 MR. WACHOWIAK: So now we have addressed
2 that also.
3 CHAIRMAN APOSTOLAKIS: How much would it
4 cost if you had an event like that? I mean, why is it
5 unacceptable?
6 MR. WACHOWIAK: The depressurization
7 system opens the reactor vessel directly into the
8 drywell. You need to have that so that the pressure
9 is equalized for GDCS to work. That is a requirement
10 for the system. To make it work passively, you have
11 to do it that way.
12 When you do that, you introduce a lot of
13 steam into the drywell and when we introduce the steam
14 into the drywell and the heat that goes into the
15 drywell, things like that, then we have to go back and
16 we have to look at thermal effects on the vessel
17 because of a fast depressurization. We have to look
18 on lifetime effects of the electrical components that
19 are inside the drywell, cabling and other electrically
20 qualified equipment.
21 Typically, those are analyzed so that they
22 can take one LOCA in the lifetime of the plant. So if
23 we have one of these LOCAs, we would be in there
24 replacing a lot of cabling and we would be replacing
25 other electronic equipment. So we want to make sure

1 that that is very unlikely, because the length of time
2 that the plant would be out of service in that
3 scenario would -- replacement power we think would be
4 cost prohibitive.
5 MEMBER CORRADINI: So can I ask the
6 question opposite? So 3 percent is not acceptable.
7 What is the accepted design length, design value?
8 MR. WACHOWIAK: What is the --
9 MEMBER CORRADINI: Yes, what can you live
10 with?
11 CHAIRMAN APOSTOLAKIS: You want to push it
12 where?
13 MR. WACHOWIAK: We want to push it less
14 than 1 percent.
15 MEMBER ABDEL-KHALIK: And, yet, you don't
16 have that enunciator in the control room indicating
17 the position of these two valves.
18 MR. WACHOWIAK: That's one way we could
19 have handled it also, but it's not only those valves
20 that get us there. There are other things that are
21 just behind the valves that may get it.
22 MEMBER BONACA: That's the 1 percent per
23 year.
24 CHAIRMAN APOSTOLAKIS: No, over the
25 lifetime.

1 PARTICIPANT: No, 1 percent over the
2 lifetime.
3 MR. WACHOWIAK: Yes, less than 1 percent
4 over the lifetime. I would like it to be even lower
5 than that, but we will have to see what is achievable.
6 MEMBER CORRADINI: Can we ask another?
7 CHAIRMAN APOSTOLAKIS: Yes.
8 MEMBER CORRADINI: Since some of us are
9 ignorant.
10 CHAIRMAN APOSTOLAKIS: Yes, we can.
11 MEMBER CORRADINI: We can? So why the
12 drywell? Just because you can't with your current
13 wetwell design, you can't put it into wetwell?
14 MR. WACHOWIAK: You can put it into the
15 wetwell, but the problem is if you put it into the
16 wetwell, you keep -- you end up with a delta P between
17 the reactor vessel and the GDCS pool.
18 MEMBER CORRADINI: Which would not allow
19 it to discharge?
20 MR. WACHOWIAK: Which would not allow it
21 to discharge.
22 MEMBER CORRADINI: Thank you.
23 MR. WACHOWIAK: Or at least put it so
24 close to the required head that the uncertainty would
25 say that it wouldn't discharge.

1 MEMBER CORRADINI: Okay.

2 MEMBER WALLIS: Can you explain this Line

3 1 then? This Line 1 up here? I don't understand it.

4 MR. WACHOWIAK: Line 1. This one?

5 MEMBER WALLIS: Yes, 9 cubic meters per

6 I/C.

7 MR. WACHOWIAK: This was the change that

8 we made.

9 MEMBER WALLIS: This is a long --

10 MR. WACHOWIAK: It eliminated the need

11 for --

12 MEMBER WALLIS: It's a longer pipe or

13 something?

14 MR. WACHOWIAK: It is.

15 MEMBER WALLIS: It says return line. It's

16 just something that takes the condensation and puts it

17 back in the vessel, isn't it? You're making the pipe

18 bigger?

19 MR. WACHOWIAK: We're making the pipe

20 bigger.

21 MEMBER WALLIS: Much bigger? It's huge.

22 MR. WACHOWIAK: Yes.

23 MEMBER WALLIS: Doesn't the water just

24 drain down through the pipe anyway? I mean, how does

25 it store water?

1 MR. WACHOWIAK: Got to do a rotation here,
2 document.
3 CHAIRMAN APOSTOLAKIS: You can do that
4 rotation.
5 MEMBER WALLIS: Do you have a trough or
6 something, so it fills up with water?
7 MR. WACHOWIAK: Do I have a rotation thing
8 up here?
9 MEMBER WALLIS: Oh, you keep it filled
10 with water before you start. Is that the idea? It's
11 full of water before?
12 MR. WACHOWIAK: Well, let's --
13 VICE CHAIRMAN SHACK: It's over there on
14 the left. There you go. There, you see? Max had it
15 on the left. There it is.
16 MEMBER WALLIS: We'll probably work on
17 this orientation.
18 MR. WACHOWIAK: Yes. Okay.
19 CHAIRMAN APOSTOLAKIS: So explain what
20 happens.
21 MR. WACHOWIAK: So this is the original
22 design and we don't have -- there is nothing in the
23 line, so just remember that one. I, you know, took a
24 long time to get the originals.
25 MEMBER WALLIS: This is the line, right?

1 MR. WACHOWIAK: Trying to say return line.

2 MEMBER WALLIS: It's empty.

3 MR. WACHOWIAK: But I'll do your -- it is

4 not empty. During power operation, so when we start

5 up the plant, the steam supply lines or steam supply

6 isolation valves are open. These are isolation

7 valves, also they are open. Here is our 9 meter tank

8 with the condensation.

9 MEMBER WALLIS: Oh, it's a tank.

10 MR. WACHOWIAK: Yes, it's a tank that is

11 put in there.

12 MEMBER WALLIS: Oh.

13 MR. WACHOWIAK: And it would be --

14 PARTICIPANT: It's like a surge pump.

15 MEMBER WALLIS: A surge pump?

16 MR. WACHOWIAK: But the condensation

17 return lines are closed. So as we start up the plant,

18 we start getting a little bit of steam up through

19 here.

20 MEMBER WALLIS: And fill up the tank?

21 MR. WACHOWIAK: And it fills all this up

22 to the surface of the water.

23 MEMBER WALLIS: Oh, so it's filled at the

24 beginning of an event?

25 MR. WACHOWIAK: At the beginning of the

1 event, the whole isolation condenser --

2 MEMBER WALLIS: Oh, it's not clear.

3 MR. WACHOWIAK: -- system is full to here.

4 So we have got 9 meters of water here, cubic meters of

5 water here.

6 MEMBER WALLIS: Okay.

7 MR. WACHOWIAK: And there is about another

8 3 to 5 up in the isolation condenser.

9 MEMBER WALLIS: Okay, because I just

10 thought it was an empty line. I didn't see how it

11 made any difference.

12 MR. WACHOWIAK: Yes.

13 MEMBER WALLIS: Okay.

14 MR. WACHOWIAK: It's not an empty line.

15 MEMBER WALLIS: It's a tank.

16 MR. WACHOWIAK: It's a full line to start

17 with.

18 MEMBER WALLIS: It's a tank. Okay.

19 MR. WACHOWIAK: And so when the scenario

20 starts when we get to the Level 2, these valves will

21 open.

22 MEMBER WALLIS: Okay.

23 MR. WACHOWIAK: The water drains in. We

24 have enough water to -- well, in the LOCA cases --

25 CHAIRMAN APOSTOLAKIS: A lot of water.

1 MEMBER WALLIS: It's like a makeup tank
2 sort of thing.
3 MR. WACHOWIAK: Like a big makeup tank,
4 yes.
5 MEMBER WALLIS: If you want to call it
6 that.
7 CHAIRMAN APOSTOLAKIS: So the 9 cubic
8 meters will come out where, in that time?
9 MR. WACHOWIAK: What's that?
10 CHAIRMAN APOSTOLAKIS: The 9 cubic meters
11 are added to the tank where?
12 MEMBER WALLIS: They are in the tank.
13 CHAIRMAN APOSTOLAKIS: Where is the
14 addition?
15 MR. WACHOWIAK: I showed the old system of
16 the tank.
17 CHAIRMAN APOSTOLAKIS: Okay.
18 MR. WACHOWIAK: The new system has a tank
19 and, apparently, it has a valve that is not connected
20 to the pipe.
21 MEMBER WALLIS: You got room for it?
22 MR. WACHOWIAK: Do we have room for it?
23 MEMBER WALLIS: Yes.
24 MR. WACHOWIAK: Yes, we do have room for
25 it.

1 MEMBER WALLIS: Okay.

2 MR. WACHOWIAK: That was -- in fact, that
3 was one of the hardest parts about making the decision
4 to go this way, because we had several different ways
5 of dealing with this. This turned out to be the best
6 solution that we could come up with, and the
7 difficulty was finding a place to put four large tanks
8 in addition to all the other large tanks that we have
9 inside of the drywell and finding out how to anchor
10 them seismically and do all the rest of the good
11 things that you have to do with these things. We have
12 done all that and --

13 VICE CHAIRMAN SHACK: Now, you have got
14 even more water.

15 MR. WACHOWIAK: And now we have got more
16 water. This is almost like a high pressure GDCS.

17 MEMBER SIEBER: You could have made the
18 reactor vessel 10 feet higher.

19 MR. WACHOWIAK: 10 feet higher wouldn't
20 necessarily help the situation, but if we made it
21 larger in diameter, it could.

22 MEMBER SIEBER: Wider.

23 MR. WACHOWIAK: As a matter of fact, we
24 only have to go a few centimeters more in diameter to
25 get what we needed for that, but we were -- we checked

1 into that and we were limited by the vessel
2 manufacturing capability of changing the vessel size.
3 So that was an option that was on the table.
4 MEMBER WALLIS: You probably can't ship it
5 either.
6 MR. WACHOWIAK: And it was taken off the
7 table.
8 PARTICIPANT: I was suspecting a
9 submarine.
10 MEMBER ABDEL-KHALIK: But those four tanks
11 give you only about a meter more of extra level?
12 MEMBER WALLIS: That's a lot, that's a
13 lot.
14 MR. WACHOWIAK: Right. But where it helps
15 now is not in the loss of feedwater events or the loss
16 of off-site power events. What it does is these
17 valves open on Level 2, which comes before Level 1.
18 So in actual LOCA cases, you go through Level 2 before
19 you get to Level 1. So you get that 27 cubic meters
20 for three of the tanks assuming one of the trains
21 fails. You get that at the right time that allows you
22 to change the setpoint for the Level 1 to some place
23 where it's an acceptable range.
24 MEMBER WALLIS: All the more reason why
25 your level indications should work.

1 MR. WACHOWIAK: All the more indication
2 why it should work, and this was all -- came about --
3 CHAIRMAN APOSTOLAKIS: Everything should
4 work.
5 MEMBER WALLIS: No, but particularly the
6 level indication. That's really the key thing.
7 MR. WACHOWIAK: This whole issue came
8 about because of the looking into the uncertainty in
9 the level issue and an actual setpoint, not an
10 analytical setpoint, because none of these things were
11 problems until we set points at the analytical limits.
12 It's when you had to add the uncertainties to the
13 setpoints that things crossed over where they got into
14 an unacceptable range. So it's kind of an elegant
15 solution to the problem and it gets at it through an
16 interesting sort of way.
17 MEMBER ABDEL-KHALIK: So what is the
18 uncertainty level indication?
19 MR. WACHOWIAK: I'm going to have to get
20 back to you on that. In various points in this
21 process, they looked at different ways of doing the
22 measurement and it has changed a couple of different
23 times. I don't really remember what it is. I don't
24 remember. It's in the DCD, so we can find that.
25 MEMBER WALLIS: Well, it seems to have

1 legs. It has legs, but I couldn't quite figure out
2 how they worked.
3 MR. WACHOWIAK: Yes.
4 MEMBER WALLIS: But you talk about legs in
5 the text.
6 MR. WACHOWIAK: Okay. I just want to
7 continue moving here. Now, we have kind of gone over
8 the event trees, so I won't -- although this slide
9 just takes us back or our points to what we were
10 looking at. So the next thing that is a major change
11 -- so that was a major change and, like I said, it
12 affected the top 90 percent of cutsets.
13 And when it affects the top 90 percent of
14 cutsets, what that means now is it's going to affect
15 how we do the Level 2 analysis, because when you
16 transition from Level 1 to Level 2, you really take
17 the most important parts and you make the transition.
18 And we have changed the important parts, so it is
19 probably going to have an impact on the Level 2.
20 The other thing, as we will see later on
21 this afternoon, hopefully we get to this, it affects
22 the major fire areas. So when we have the fire core
23 damage frequency at the $2x10^{-8}$ and $1.5x10^{-8}$ in the
24 Level 1, it is because of one of these loss of off-
25 site power or loss of feedwater initiated fire events.

1 And then it affects the seismic margins
2 analysis, because the seismic margins analysis could
3 not take credit for ICS because we couldn't take
4 credit for the CRD pumps. So this one particular
5 change here really affects everything in the PRA.
6 There is almost nothing that it doesn't touch.
7 The next thing that we have that is going
8 to be different in the next revision of the PRA is
9 this digital instrument and control system
10 architecture. Finally, I say, me, we have chosen what
11 type of architecture we're going to use for our
12 instrument and control system. As I think somebody
13 mentioned here earlier this morning, there are
14 standards that are out there, but there are probably
15 a semi-infinite number of ways to actually meet the
16 standards, so we have to pick something.
17 We have gone through an analysis and we
18 have picked what types of things we want to have, so
19 that makes it that much easier to model. So we can go
20 away from the surrogate ABWR type analysis and into
21 something that matches what is actually going to be
22 built.
23 We have also determined our Diversity and
24 Defense-In-Depth requirements.
25 MEMBER WALLIS: How do you do that?

1 MEMBER SIEBER: What are they?

2 MR. WACHOWIAK: I will get that on -- I

3 think it's on the next page.

4 MEMBER WALLIS: How do you do that? I

5 mean, are there real criteria for these things?

6 MR. WACHOWIAK: For Diversity and Defense-

7 In-Depth?

8 MEMBER WALLIS: Right. Is it somebody's

9 judgment or is it some criteria? I mean, you can keep

10 on being diverse forever. You can keep on adding

11 defense-in-depth. How do you decide when it's good

12 enough? I mean, you have determined. There must be

13 some way you determined.

14 MR. WACHOWIAK: Well, we have determined

15 the requirements. Now, whether they are acceptable is

16 up to those --

17 CHAIRMAN APOSTOLAKIS: So your judgment

18 was that double failure proof is good enough?

19 MEMBER WALLIS: That's good enough?

20 CHAIRMAN APOSTOLAKIS: If the NRC staff

21 agrees, then it's --

22 MR. WACHOWIAK: Well, double failure proof

23 in the safety-related DCIS and then we have added a

24 diverse system that is different from the safety-

25 related DCIS. So it's double failure proof plus a

1 diverse system.

2 CHAIRMAN APOSTOLAKIS: Oh, okay.

3 MEMBER WALLIS: So it's doubly double

4 failure proof?

5 CHAIRMAN APOSTOLAKIS: Doubly double, yes.

6 MEMBER SIEBER: They don't have that many

7 trains.

8 MR. WACHOWIAK: Right. Now, what this

9 allows us to do in the instrument and control system

10 is we can actually take one of the divisions out of

11 service. Now, why did we go to this? This is really

12 the thing that drove us to making this change.

13 MEMBER WALLIS: That's one out of two?

14 MEMBER SIEBER: No, it's four trains.

15 MR. WACHOWIAK: Four trains.

16 MEMBER WALLIS: One out of four?

17 MR. WACHOWIAK: Two out of four.

18 MEMBER WALLIS: Two out of four?

19 MR. WACHOWIAK: Well, it's four trains.

20 Any two give you the signal.

21 MEMBER SIEBER: Right.

22 CHAIRMAN APOSTOLAKIS: Right.

23 MEMBER WALLIS: Yes, the average or

24 something or you --

25 MR. WACHOWIAK: So it ends up being double

1 failure proof and we got to that, this change.

2 MEMBER SIEBER: It allows you to test.

3 MR. WACHOWIAK: It allows us to test our

4 batteries when we're online, because we have huge

5 batteries that last a long period of time. Setting

6 up, testing, recharging --

7 MEMBER WALLIS: Is this a system --

8 MR. WACHOWIAK: -- the batteries would

9 take longer than an hour.

10 MEMBER WALLIS: Is this the Siemens system

11 or like the Siemens system?

12 MR. WACHOWIAK: Well, we'll talk a little

13 bit about it and you can tell me if it's like the

14 Siemens system.

15 MEMBER WALLIS: Oh, okay, okay. You don't

16 know though.

17 CHAIRMAN APOSTOLAKIS: What is OOS in the

18 PRA?

19 MR. WACHOWIAK: Out of service time of the

20 division that is out. Out of service time would be

21 controlled by the statements in the Technical

22 Requirements Manual, which is an owner-controlled

23 document, and the Maintenance Rule, which will then

24 tally up the time that we have.

25 CHAIRMAN APOSTOLAKIS: Okay.

1 MEMBER SIEBER: Now, if you go back to the
2 previous slide, this refers to protection systems and
3 your safety feature systems, control systems?
4 MR. WACHOWIAK: This particular part is
5 the -- mainly the ECCS, so the ECCS system. Now, the
6 protection --
7 MEMBER SIEBER: Engineering, ESF.
8 MR. WACHOWIAK: Engineering Safeguard
9 Features. The protection system though uses many of
10 the same concepts. So the protection system --
11 MEMBER SIEBER: You use the same
12 equipment.
13 MR. WACHOWIAK: No, that's on the next
14 slide.
15 MEMBER SIEBER: Okay.
16 MR. WACHOWIAK: But it uses the same
17 concepts to allow all the same things here, so that we
18 can do this on that system also.
19 MEMBER MAYNARD: These are all primarily
20 protection ways and it's more like an on and off
21 switch. Either it starts or it stops something, as
22 opposed to actually controlling a motor for open and
23 close.
24 MR. WACHOWIAK: Absolutely.
25 MEMBER MAYNARD: It's primarily a go or no

go to a degree.

MR. WACHOWIAK: Go or no go.

MEMBER SIEBER: It depends on the reactor type whether it has functions built into it or on and off.

MR. WACHOWIAK: The safety-related functions in ESBWR are go, no go, on/off.

MEMBER SIEBER: Yes, on and off.

MEMBER MAYNARD: And those are --

MR. WACHOWIAK: On and stay on forever.

MEMBER MAYNARD: Okay.

MR. WACHOWIAK: So we have a bunch of different scenarios here. I didn't take that line off of there, but it was a caution for all looking at that.

CHAIRMAN APOSTOLAKIS: Which line?

MR. WACHOWIAK: This last one here. When we first used the figure, I wanted to make sure it was the same as the official one that was sent in. It's the same, so we don't have to worry about it. We have a safety-related digital control and instrumentation system. It has two pieces, the RPS, the Reactor Protection System, and the ESF. We call it ECCS. So if we look at this line here, what this is indicating is that this is a diverse system from this, different

1 hardware, different software, different manufacturer,
2 two different systems.
3 MEMBER WALLIS: So --
4 MR. WACHOWIAK: They use different
5 sensors.
6 MEMBER WALLIS: Different things.
7 MR. WACHOWIAK: Diverse systems. So ESF
8 and --
9 MEMBER SIEBER: So you would get a reactor
10 trip out of only one of those, right?
11 MR. WACHOWIAK: Of this one. This one
12 does reactor trip.
13 MEMBER SIEBER: Right.
14 MR. WACHOWIAK: This one does ECCS
15 systems.
16 MEMBER SIEBER: Okay.
17 CHAIRMAN APOSTOLAKIS: And when you say
18 this one, that one has two trains?
19 MR. WACHOWIAK: They both have four.
20 CHAIRMAN APOSTOLAKIS: Oh, they both have
21 four.
22 MR. WACHOWIAK: Yes, four channels.
23 CHAIRMAN APOSTOLAKIS: Okay. Okay.
24 MR. WACHOWIAK: Four channels.
25 CHAIRMAN APOSTOLAKIS: Okay. They are

1 both double channeled.

2 MR. WACHOWIAK: And any two channels --

3 CHAIRMAN APOSTOLAKIS: Okay. I understand

4 now.

5 MR. WACHOWIAK: -- will tell it to go.

6 CHAIRMAN APOSTOLAKIS: Yes, okay. Well,

7 that's pretty high enough.

8 MR. WACHOWIAK: This one is a fail on

9 system.

10 MEMBER WALLIS: This is a common failure

11 model in the same place.

12 MR. WACHOWIAK: Fails into operation.

13 This one is a fail as-is system.

14 CHAIRMAN APOSTOLAKIS: Now, Rick, when you

15 say four trains and double failure proof and so on,

16 when you say failure, what did you mean? I mean, did

17 you place them -- the separation, distance criteria?

18 There are all sorts of different manufacturers. In

19 other words, how did you address the issue of common

20 cause failure if possible? Why are they in four

21 separate independent trains?

22 MR. WACHOWIAK: Well, there are four

23 separate and independent -- yes, four separate and

24 independent trains.

25 CHAIRMAN APOSTOLAKIS: Yes.

MR. WACHOWIAK: In here there's common cause failure within those four different trains, because they are the same equipment, but they are separated. They are sited in this corner, this corner, this corner, this corner of the building, so they are separated by space. They are separated by fire barriers. They are separated by flood zones. They are separated --

MEMBER SIEBER: But identical.

MR. WACHOWIAK: But it's identical, that's correct, and within each zone there is a copy of those four different channels.

CHAIRMAN APOSTOLAKIS: Oh.

MR. WACHOWIAK: Of one of these. Now, this one here, there are four different, four copies of the same thing within this system --

CHAIRMAN APOSTOLAKIS: Yes.

MR. WACHOWIAK: -- that is located now in the four corners. So Division 1 room --

CHAIRMAN APOSTOLAKIS: Yes?

MR. WACHOWIAK: -- will be -- these two will be collocated Division 1 within that room, but there will be different equipment between these two different systems.

MEMBER SIEBER: Yes.

1 CHAIRMAN APOSTOLAKIS: Now, since the --
2 I mean, if you look at the statistical evidence, it
3 seems that the majority of digital I&C failures are
4 due to -- is due to requirements, faulty requirements
5 or specifications. So how is that handled? I mean,
6 when you separate them, that doesn't mean anything
7 when it comes to that. They are all from the same
8 manufacturer, I suppose, the same provider?
9 MR. WACHOWIAK: Within a column.
10 CHAIRMAN APOSTOLAKIS: Yes.
11 MR. WACHOWIAK: They are from the same
12 manufacturer and they would all have the same
13 specifications, so that's where it comes back to if we
14 talk about things like the software error, it's in the
15 specification of what we're going to put in there
16 where that would be introduced. And so there is a
17 software control plan that is --
18 CHAIRMAN APOSTOLAKIS: So --
19 MR. WACHOWIAK: -- being done by a
20 different group than mine that is --
21 CHAIRMAN APOSTOLAKIS: So you are relying
22 then on controlling the process of development and
23 implementation of the software to protect you against
24 common cause failure of that type?
25 MR. WACHOWIAK: Of that type and then

testing.

CHAIRMAN APOSTOLAKIS: And then testing, yes.

MR. WACHOWIAK: And it's tested in the factory and it's tested when it's installed.

MEMBER SIEBER: Where you get the independence that avoids common cause failures is not through redundancy, but by diversity.

CHAIRMAN APOSTOLAKIS: Right, but they don't seem to have diversity.

MEMBER SIEBER: And the way he has described it, there is no diversity.

CHAIRMAN APOSTOLAKIS: Within the column there is no diversity, correct, Rick?

MR. WACHOWIAK: No diversity within the column.

CHAIRMAN APOSTOLAKIS: Yes, that's the point.

MR. WACHOWIAK: Now, we move over here to the non-safety-related side. We have this thing that is called a diverse protection system. It does most of the same functions that ECCS does and some of the same functions that RPS does and it is done using a different type of system. Yet, again, a third manufacturer, diverse from all those other two, a

1 third manufacturer and it is set up to provide a
2 diverse backup to those systems.
3 CHAIRMAN APOSTOLAKIS: I see.
4 MEMBER SIEBER: Now, the codes require
5 redundancy and diversity, but it doesn't say how.
6 MR. WACHOWIAK: Right. So how we have
7 done this is it's redundant within each one of these
8 lines, this one may not be maybe redundant everywhere,
9 but it's redundant within the columns and diverse
10 between the columns.
11 CHAIRMAN APOSTOLAKIS: But, I mean, what
12 is it that prevented you from having diversity within
13 each of the first two columns? Is it just a matter of
14 economics?
15 MR. WACHOWIAK: It's a choice. Like we
16 said, there is a semi-infinite way to skin this cat.
17 CHAIRMAN APOSTOLAKIS: Yes, but, I mean,
18 the issue of common cause failures is --
19 MEMBER MAYNARD: But there are different
20 approaches to that. I personally believe like within
21 the column, you're better off, you're going to have a
22 higher reliability and better safety, if you don't
23 have diversity within that column. I think I agree.
24 It's better to have diversity between the two columns,
25 but within that column you introduce additional

1 failures and additional problems, everything from
2 maintenance and everything else, when you have diverse
3 things in the reactor protection system.
4 CHAIRMAN APOSTOLAKIS: Why? I mean, I
5 don't understand that.
6 MEMBER SIEBER: What you need to worry
7 about is operator error.
8 MEMBER MAYNARD: Or operations and
9 maintenance type.
10 MEMBER SIEBER: Yes, testing and
11 calibration.
12 MEMBER MAYNARD: Training.
13 CHAIRMAN APOSTOLAKIS: But why didn't you
14 introduce those when you have the DPS diverse?
15 MEMBER SIEBER: The reactor table and
16 different things.
17 CHAIRMAN APOSTOLAKIS: I mean, those same
18 problems persist, right? But why didn't you have
19 calibration problems when you diversified the DPS?
20 MEMBER MAYNARD: Well, if you had
21 diversity within like column 1 and column 2 --
22 CHAIRMAN APOSTOLAKIS: Right.
23 MEMBER MAYNARD: Now, you end up basically
24 with 16 different --
25 MEMBER SIEBER: Channels.

1 MEMBER MAYNARD: -- channels and things
2 that people have to train on, 16 different types of
3 things as opposed to only being trained on two types.
4 There are different philosophies, but I believe that
5 you end up with less errors by doing it the way that
6 they have been doing it.
7 MEMBER WALLIS: Is there any legal basis
8 or some theoretical based on experience rather than
9 judgment for these sorts of statements?
10 MEMBER MAYNARD: I think there is data out
11 there. I don't know that I can pull it out of a
12 binder or whatever but, you know, from the experiences
13 that you see in training type issues and operator
14 issues, I mean, you have got different things. They
15 are trying to do what they normally do on this and
16 present it to the one who is supposed to be doing the
17 same thing, but it's a different stuff, a different
18 component.
19 CHAIRMAN APOSTOLAKIS: So when you do the
20 focused PRA, then you will get no credit for the non-
21 safety-related details.
22 MR. WACHOWIAK: Unless this falls into
23 RTNSS and as we will see, hopefully before we break
24 for sleeping tonight, that it gets there.
25 Particularly --

1 MEMBER SIEBER: That's not on the
2 schedule.
3 MR. WACHOWIAK: One of the other things
4 that is nice about the way that this is split now,
5 too, with the diverse part being in this column, is
6 that we can share. We don't have to add extra diverse
7 instruments, because we already have diverse
8 instruments out here and so we pick up the non-safety-
9 related instruments and they are diverse from the
10 safety-related instruments already.
11 This will probably be the same type of
12 system that is controlling the turbine and the
13 feedwater.
14 CHAIRMAN APOSTOLAKIS: When you say triple
15 redundant, what do you mean? One out of three?
16 MEMBER SIEBER: No.
17 MR. WACHOWIAK: It's a one out of -- parts
18 of it are one out of three, but the triple redundant
19 means that all the parameters are measured three times
20 and the computer checks between the different three
21 systems to try to weed out bad answers.
22 CHAIRMAN APOSTOLAKIS: But that's two out
23 of three kind of logic?
24 MR. WACHOWIAK: Yes, it's the architecture
25 that is used in controlling many GE turbines. The

1 system has been used. At least the one we're looking
2 at now has been used several places in turbines and
3 oil rigs and other places where we have some data on
4 the equipment.
5 MEMBER SIEBER: Now, are all of these
6 things going to go through one process? For example,
7 you're going to have protection systems, engineered
8 safety feature systems, your redundant systems, your
9 valves and plant systems. Are they all going to be
10 through one of four processors, four channels?
11 MR. WACHOWIAK: This has four processors,
12 a minimum of four processors. This has a minimum of
13 four processors. This has a minimum I think of --
14 MEMBER SIEBER: Three.
15 MR. WACHOWIAK: I think there's three
16 processors in the system, but it's arranged
17 differently.
18 MEMBER SIEBER: So that's 11 processors,
19 right?
20 MR. WACHOWIAK: Minimum. We will get into
21 some of this later.
22 MEMBER SIEBER: You're going to have an
23 independent -- do you know, like a feedwater heater
24 local control or that's not connected to anything or
25 is everything going to be run off of the master signal

1 like the reactor power?

2 MR. WACHOWIAK: I'm not quite sure how to

3 answer that particular question, because it hasn't

4 been laid out to that level of detail, but I can

5 answer that maybe in the ECCS a little bit because

6 that is where I have concentrated my time. It's

7 possible that we can have one processor per channel

8 that does everything in ECCS. It's possible that we

9 can have a different processor for every different

10 decision in ECCS. Both of those --

11 MEMBER SIEBER: Those are the extremes.

12 MR. WACHOWIAK: -- are a possible thing.

13 Yes, those are the extremes. It's likely that we'll

14 fall somewhere in the middle, that it won't all be

15 done on one processor.

16 MEMBER SIEBER: But you will have shared

17 signals?

18 MR. WACHOWIAK: But we will have shared

19 signals and I will talk about those signals on some of

20 the next upcoming slides.

21 MEMBER SIEBER: So your key features in

22 there are going to be the multiplexers and how you

23 control the information on some data level?

24 MR. WACHOWIAK: Yes. It's not really

25 multiplexers, but we'll talk about that. It's kind of

1 -- so we have choices in how we arrange that and both
2 of them have their tradeoffs. If we have everything
3 on one processor, then that one processor can fail
4 everything if there is some sort of a burnout or
5 whatever or, you know, some hardware failure.
6 If we have it spread amongst multiple
7 processors, then it uses more power, takes more heat,
8 has more possibilities of communication failures,
9 things like that, so there are more chances that we
10 would have individual failures. So we're going to
11 have to optimize that as we build in the different
12 systems.
13 And we'll talk about this a little bit,
14 not necessarily so much in the processor side, but out
15 in the field, in the data acquisition and in the
16 signal actuation pieces there are some things that we
17 can use the PRA to determine if there should be
18 segmentation between some of those things based on
19 what different things can happen in different
20 scenarios, and we will be talking specifically about
21 how we address fires in preventing spurious actuation
22 of DPVs with fires.
23 MEMBER SIEBER: But no code or standard or
24 regulatory guide gives you direction with regard to
25 how you design the architecture?

1 MR. WACHOWIAK: No, not that I know of.

2 MEMBER CORRADINI: We were just asking

3 over here about what Jack just asked. So there is no

4 guide.

5 MEMBER SIEBER: Right.

6 MEMBER CORRADINI: What do other

7 industries use or is this just no -- you don't -- they

8 don't go to this level of worry?

9 MEMBER SIEBER: They don't.

10 MR. WACHOWIAK: In some cases they don't

11 go to this level of worry but, in particular, for the

12 ECCS this is a commercially available product that is

13 used in other industries, maybe not two out of -- you

14 know, two signal, four channel redundant thing, but

15 the way the signals are passed, the way the processors

16 are put together is a commercially available system.

17 It is used.

18 MEMBER CORRADINI: Using chemicals.

19 MR. WACHOWIAK: Chemical. Chemical is

20 what they usually talk about.

21 MEMBER WALLIS: So what is the life of

22 these processors, typical life?

23 MEMBER SIEBER: Until the next version of

24 Windows comes out.

25 MR. WACHOWIAK: I thin it even runs Windows.

1 MEMBER CORRADINI: There is a hood issue.
2 If Service Pack 3 comes out, then you're in trouble.
3 MEMBER SIEBER: Yes, then you're screwed.
4 You've got to shut down.
5 MEMBER WALLIS: Computers don't last very
6 long.
7 MR. WACHOWIAK: Well, see, that in
8 particular is one of the things in optimizing this.
9 If we put in multiple processors, then we'll be likely
10 repairing, you know, four processors.
11 MEMBER WALLIS: How frequently do you
12 expect to have to replace parts of these things or the
13 whole thing?
14 MR. WACHOWIAK: I don't have that at this
15 point, but each of the manufacturers that we have been
16 looking at have data reports that give the life of
17 their --
18 MEMBER WALLIS: I would think you would
19 want to specify what you want not just what they give
20 you.
21 MR. WACHOWIAK: Well, let me turn this
22 around this way. If we specify what they want and
23 it's not what they have, then where do we get data on
24 what they are going to give us?
25 MEMBER WALLIS: Well, you would go to

1 another system if it's inadequate.

2 MEMBER CORRADINI: There is only discrete

3 amounts of choices.

4 MEMBER WALLIS: Or go back to analog.

5 MR. WACHOWIAK: So what we will be doing

6 is we will see what -- and we have already done this,

7 the instrument and control people have done this.

8 They have gone to the different manufacturers and they

9 said show me your equipment, show me the lifetime

10 information, show me the data on what you have and

11 then in choosing which things fit into these different

12 boxes, we use that as part of the input decision.

13 Now, I wasn't part of that input decision, but people

14 in our company did.

15 MEMBER WALLIS: I was wondering if you

16 think it's 5 years or 10 years or 50 years or you

17 don't have any idea?

18 MR. WACHOWIAK: It would not be 50 years

19 and I wouldn't be surprised if each individual card

20 was 10 years, but 5 might be right.

21 MEMBER SIEBER: That's about it.

22 MEMBER WALLIS: So you would have to

23 replace them quite a bit?

24 MEMBER SIEBER: For this kind of stuff,

25 it's about right.

NEAL R. GROSS

1 MR. WACHOWIAK: Unless we don't put in
2 that many. It's a tradeoff.
3 MEMBER MAYNARD: But I would think it
4 would be quite a bit of data. Mostly, the processor
5 you're probably looking at, they are used in a lot of
6 other instruments, right? Power plants, do you know?
7 There's bound to be power plants and overseas.
8 MEMBER SIEBER: Doing the acquisitions and
9 nuclear development.
10 MEMBER MAYNARD: As far as just the life
11 of the processor itself, I would think that we would.
12 MEMBER SIEBER: Right.
13 MR. WACHOWIAK: Now, in --
14 MEMBER SIEBER: Does that represent data
15 or the phenomenon or passive. Which capacitors
16 dryout? For most places you don't have a strict
17 capacitors anymore anyway. They are all built into a
18 chip.
19 MR. WACHOWIAK: In the Revision 1 of the
20 PRA that you have, we have two different numbers that
21 we use for different systems based on what the
22 manufacturer of the equipment told us for the Lungmen
23 Plan. Some of the cards are 100,000 hour mean time
24 between failures. Some of them are 200,000 hour mean
25 time between failure. For this project, I know we

1 talked with the I&C guys who were saying that that is
2 probably not good enough.
3 We would like to see something better, but
4 I think in Lungmen they were specifying their minimum
5 so that, you know, maybe what they specify for
6 warranty is different than actual. So, you know, we
7 have got to make sure that we understand what it is
8 that we're getting, but those are numbers that we had
9 from a different project and we used that to help us
10 influence how we're going to do this project.
11 MEMBER ABDEL-KHALIK: How do you address
12 obsolescence?
13 MEMBER SIEBER: When it becomes obsolete,
14 you replace it.
15 MR. WACHOWIAK: Well, there is -- that is
16 part of the things that we have considered in the
17 design. I'm trying to remember what actual
18 organization handles that, but I know it is being
19 considered at some level because in the existing
20 plants, obsolescence is a very big problem and I think
21 we're trying to -- we have done at least some effort
22 to try to address that.
23 Does anybody who maybe read the rest of
24 the DCD remember?
25 MEMBER SIEBER: Well, I can tell you what

1 licensees do with existing plants. You buy up spare
2 parts off the market. You get a canceled plant and
3 all of a sudden you find a lot of spare parts.
4 MR. WACHOWIAK: We're not going to have
5 any canceled plants this time.
6 MEMBER SIEBER: Okay. Or you go to the
7 manufacturer and buy up inventory and you finally come
8 to a time, I think it was the Gnay Plant where they
9 started manufacturing B250 cards and a couple of
10 people were buying the circuit board layout from them.
11 But you finally come to a point where you say, you
12 know, this isn't worth the effort of having too many
13 failures and you put in another running system.
14 MR. WACHOWIAK: So I don't know if that
15 question can be or has been answered or is being
16 considered to be answered in the scope of the DCD. I
17 know we have talked about it, but I don't know that it
18 actually makes it into the scope of the DCD. One of
19 the things though that we are talking about now is --
20 and some have questioned why does it take so long to
21 determine which things you're going to put in here.
22 Well, one of the things that we have to
23 consider is the plant is not even going to be built
24 starting until when, five, six, eight years from now.
25 So we had --

1 MEMBER SIEBER: So the equipment will be
2 obsolete before you start building.
3 MR. WACHOWIAK: We don't want to have the
4 equipment obsolete before we build it, so we're trying
5 to specify this plant, specify the I&C which we know
6 moves at a different trajectory than concrete and
7 rebar and other things like that, that changes faster,
8 we want to make sure that we understand the
9 requirements for this, but we don't necessarily lock
10 ourselves into an obsolete product early on.
11 MEMBER MAYNARD: Most of the licensees
12 that are now putting in digital control systems are
13 putting as part of their contracts a guaranteed period
14 of time that were -- with everything done to provide
15 parts, so that you at least have some known time frame
16 where you should be able to replace the parts.
17 MEMBER ABDEL-KHALIK: But regardless of,
18 you know, when you start and when you buy, you know
19 that over the life of a plant whatever you're going to
20 put in will become obsolete.
21 MEMBER SIEBER: That's right.
22 MEMBER ABDEL-KHALIK: So somehow you have
23 to have a plan from day one as to how to handle that.
24 MR. WACHOWIAK: Yes.
25 MEMBER SIEBER: Well, most plants,

existing plants that have changed their data acquisition and, you know, that's a couple million dollar project.

MEMBER MAYNARD: I don't think you can always have a plan from day one on some of that because by the time you reach that point, the technology that was available today, not six years from now.

MEMBER CORRADINI: So let me ask another question since this is not my area, but I'm curious. So the only two places where I think of this is in the chemical industry and the airline industry. So is what Jack is saying a typical thing, is they will pick a point in time after they buy up all the spare parts and build all the -- all they can, just go in and do a full scale rebuild?

Is that typical with the only two industries I can think of that are similar?

MEMBER SIEBER: Well, a lot of different plants are doing an awful lot with this type of thing, you know, coal fire.

MR. WACHOWIAK: Right.

MEMBER SIEBER: Yeah, we have digital controls and coal fire plants.

MEMBER MAYNARD: Like the fossil people

1 that headed the nuclear plant on this in this area,
2 right?
3 MEMBER SIEBER: And fossil copies the
4 petroleum industry and the chemical industry.
5 MEMBER CORRADINI: Right. Well, that's
6 what I was guessing, is the chemical industry --
7 MEMBER SIEBER: You couldn't afford to
8 develop nuclear power plant instruments with a single
9 product. You have to use -- it has to be spread over
10 a bunch of industries in order to make it cost
11 effective, so you are going to end up buying the same
12 things that, you know, the other buyers.
13 MR. WACHOWIAK: Everything that we have
14 considered here has some sort of basis in a commercial
15 product that can be adapted and licensed into our
16 plant in this time frame that we're looking at.
17 The final thing that I wanted to talk
18 about on this slide is that for the BiMAC we have
19 added another layer of diversity and this is --
20 basically, it's not any of these systems. We're going
21 to use stand alone PLCs to drive that system, so that
22 that won't be in conjunction with any of the rest of
23 these things, so we won't have a computer failure.
24 MEMBER WALLIS: And what is a "Historian?"
25 What is a "Historian?"

1 MR. WACHOWIAK: And you see that where?
2 That's in here? This probably is plant data that we
3 would keep record of the plant.
4 MEMBER WALLIS: As to one like it?
5 MR. WACHOWIAK: I guess it is.
6 MEMBER CORRADINI: So you buy one and keep
7 it around for awhile?
8 MR. WACHOWIAK: It's a computer system.
9 MEMBER CORRADINI: It may be more
10 reliable.
11 MEMBER WALLIS: A professor at an Ivy
12 League university. Okay.
13 MR. WACHOWIAK: So we --
14 MEMBER WALLIS: Well, there are a lot of
15 them too in the country.
16 MEMBER SIEBER: Yes, look out for the Y3K.
17 MR. WACHOWIAK: Okay. Now, this is --
18 mainly within ECCS now that I will be talking about we
19 use concepts with this in the RPS also.
20 MEMBER WALLIS: Oh, so this is all about
21 PRA. All the stuff in the previous slide is somehow
22 modeled on the PRA?
23 MR. WACHOWIAK: In Revision 1 and Revision
24 0 of the PRA, this is not modeled.
25 MEMBER WALLIS: Ah, it's not.

1 MR. WACHOWIAK: In Revision -- well, let
2 me back up a little bit. The RPS diverse from the
3 ECCS is modeled in Revision 1 of the PRA and Revision
4 0. DPS itself was
5 MEMBER SIEBER: It's gross.
6 MR. WACHOWIAK: What's that?
7 MEMBER SIEBER: It's gross modeling.
8 MEMBER WALLIS: Gross modeling.
9 MR. WACHOWIAK: Yes. Well, that was one
10 of the other things I should have put on the slide.
11 MEMBER WALLIS: Let me just ask. This is
12 about PRAs, right?
13 MR. WACHOWIAK: Right. And now, the DPS,
14 when we -- we didn't have that diversity assessment
15 and what goes behind that diversity assessment now is
16 what are the different functions that those things are
17 connected to? Now, we know everything that the
18 diverse DPS system is connected to.
19 In Revision 1 of the PRA it wasn't
20 connected to everything that it's ultimately going to
21 control. And these things are now going to be
22 configured differently in the plant than what was
23 envisioned when we created Rev 1 of the PRA. So that
24 is what I want to get into now, is how are we going to
25 implement this?

1 The system is double failure proof. The
2 term of choice that they use at the plant is the N
3 minus 2 mod. Basically, it allows a single failure.
4 I'm sorry, one division out of service and a single
5 failure and everything still actuates. It's not like
6 in some existing plants where if you have one division
7 out of service, the other division is completely
8 redundant. In reality, if this is the case, one
9 division is out of service and we have a failure in
10 the other division, everything still works. There is
11 no loss of function whatsoever in that case.
12 MEMBER SIEBER: And you don't get a trip.
13 MR. WACHOWIAK: That is not quite true for
14 trips, because there are some --
15 MEMBER MAYNARD: If you take one out of it
16 and go to a one out of three? Well, most of the time
17 you take the one you've got in service and they can
18 put that in trip.
19 MEMBER SIEBER: Right.
20 CHAIRMAN APOSTOLAKIS: Oh, okay.
21 MEMBER MAYNARD: So that becomes one of
22 two.
23 CHAIRMAN APOSTOLAKIS: Right.
24 MR. WACHOWIAK: No, that's not the way.
25 That's the way it works in the RPS system, so in the

1 protection system, if you take one out -- if one
2 fails, it defaults to trip. The operators can then
3 assess that situation and put in a bypass if they
4 wanted to, but that is the way the panel works. In
5 the ECCS if something fails, it is just indicated as
6 a failure and the operators can then choose to bypass
7 that and that is really their only choice, is to
8 bypass something that has been failed.
9 Only one can be bypassed, but I guess they
10 could put it in trip 2, but I'm not sure what it means
11 putting it in trip in ECCS. That is -- you know, you
12 don't tell it to start the ADS timer when you're
13 operating the plant, so you put that in bypass. On
14 the second failure what you would do is you would be
15 in a pretty short LCO where you would shut the reactor
16 down.
17 But to think of it as two out of four,
18 there are four systems. It is -- so you can consider
19 it as two out of four, but it's really set up as in
20 any two, two out of N. So if four are in service,
21 it's a two out of four. If the operators put one of
22 those four in bypass, it's a two out of three, but
23 it's still always looking at any two that give the
24 signal actuate.
25 MEMBER WALLIS: It's not that you could

1 relate that to some metric, I mean, if you could say
2 that the CDF changes by something when you go to two
3 instead of three and we would have some idea of how
4 important this was?
5 MR. WACHOWIAK: We could. We haven't done
6 that.
7 MEMBER WALLIS: You just talk about it.
8 I have no idea how important it is.
9 CHAIRMAN APOSTOLAKIS: The state of the
10 art says you -- it's too soon to try to do.
11 MEMBER WALLIS: It's too soon to do that?
12 MR. WACHOWIAK: I would think. Our
13 intention on those things would be to set up. When we
14 set up the plant PRA for doing things like A4
15 evaluations, when they do take one of these out of
16 service, that type of thing --
17 MEMBER WALLIS: Are you going to have some
18 sort of risk meter in this plant, so that if you take
19 things out of service it tells you how risky it's
20 getting?
21 MR. WACHOWIAK: That is common now.
22 MEMBER WALLIS: You're going to have that?
23 CHAIRMAN APOSTOLAKIS: But except for
24 these things.
25 PARTICIPANT: Some of the plants are doing

NEAL R. GROSS

1 this right now.

2 MEMBER WALLIS: Except for these things,

3 except for these things.

4 CHAIRMAN APOSTOLAKIS: That's why we have

5 this big research program.

6 MEMBER WALLIS: Ah.

7 MEMBER SIEBER: He wants to know if it's

8 a standard or optional.

9 MR. WACHOWIAK: It is.

10 CHAIRMAN APOSTOLAKIS: Sort of practical.

11 MR. WACHOWIAK: With A4 you have to do

12 something. Now, what the something is is implemented

13 in varying degrees, and our intention is to be able to

14 model everything that is in the PRA and the A4

15 evaluation.

16 CHAIRMAN APOSTOLAKIS: Well, and you

17 really don't have a responsibility of going beyond the

18 state of the art. I mean, the state of the art

19 doesn't allow you. We have been licensing without

20 complete PRAs for 40, 50 years now. So, you know, you

21 use the standard transient depth, diversity line of

22 argument and say this is good enough.

23 MR. WACHOWIAK: That's right. That's what

24 we would do.

25 CHAIRMAN APOSTOLAKIS: Yes.

1 MR. WACHOWIAK: Our guess our marketing
2 department might go beyond the state of the art.
3 CHAIRMAN APOSTOLAKIS: But they don't come
4 to the ACRS, do they? Does the marketing department
5 come here?
6 MR. WACHOWIAK: Come here? No.
7 CHAIRMAN APOSTOLAKIS: To defend it?
8 MR. WACHOWIAK: No.
9 CHAIRMAN APOSTOLAKIS: So --
10 MEMBER WALLIS: What is a load driver for
11 a DPV? Is that something --
12 MR. WACHOWIAK: A load driver is --
13 MEMBER WALLIS: Instrumentation or --
14 MR. WACHOWIAK: -- part of the
15 instrumentation. It's a switch.
16 MEMBER WALLIS: It's a switch. Okay.
17 MR. WACHOWIAK: That is on the --
18 MEMBER WALLIS: Okay. It's just a switch.
19 MR. WACHOWIAK: It converts.
20 MEMBER WALLIS: It's a switch of sorts.
21 MR. WACHOWIAK: It's a switch. It
22 converts the signal from the computer --
23 MEMBER WALLIS: Okay.
24 MR. WACHOWIAK: -- into a closed circuit.
25 MEMBER WALLIS: Okay.

1 MR. WACHOWIAK: That will drive the
2 valves.
3 MEMBER WALLIS: And somebody decided there
4 is a one in a million chance of failure per hour? It
5 just came out of the air.
6 CHAIRMAN APOSTOLAKIS: Of what? Failure
7 of what?
8 MEMBER WALLIS: I'm just trying to see
9 where some of these numbers come from.
10 MR. WACHOWIAK: The load driver? We had--
11 MEMBER WALLIS: This is a switch and
12 someone said it's 10^{-6} total failure rate per hour, so
13 there would be no basis for that whatsoever.
14 MEMBER SIEBER: It sounds good.
15 MEMBER WALLIS: It sounded good?
16 CHAIRMAN APOSTOLAKIS: A lot of these
17 numbers, I think, come from LWR experience.
18 MEMBER WALLIS: And then there is a
19 generic common cause failure factor of .1? That came
20 out of the air, too?
21 MR. WACHOWIAK: There is a generic common
22 cause failure number in the ALWR document.
23 MEMBER WALLIS: Well, does sort of bother
24 me these numbers just coming out of the air. Then
25 they use -- you should believe them when you get them.

1 MR. WACHOWIAK: What I want -- in previous
2 PRA discussions that we have had with the staff and
3 with the ACRS is that one of the things that we would
4 like to do here is show that we meet all of the goals
5 regardless of what the data sets. So that is why we
6 do some of the sensitivities and other things and you
7 ask questions about what happens if you use a
8 different data value.
9 We would like the plant to be safe based
10 on the configuration of the plant, not necessarily or
11 not largely based on what particular numbers you put
12 on each of these different components. So we use
13 our --
14 MEMBER WALLIS: Yes, but that's what a PRA
15 is all about.
16 MR. WACHOWIAK: -- best estimate.
17 MEMBER WALLIS: PRAs are about putting
18 numbers on these things.
19 MR. WACHOWIAK: PRAs are about putting
20 numbers on things, but then what do you do with the
21 answer when you get it?
22 MEMBER WALLIS: Well, I hope you could
23 believe it within a factor of 10 or something.
24 CHAIRMAN APOSTOLAKIS: Well, the data, the
25 reporting the data analysis section, I think most of

1 it comes from LWR experience.

2 MR. WACHOWIAK: Yes.

3 MEMBER WALLIS: Yes, but these load

4 drivers are just a typical thing, I mean, I assume

5 since we're talking about switches and

6 instrumentation.

7 CHAIRMAN APOSTOLAKIS: Since the reactor

8 safety study, there have been a number of --

9 MEMBER WALLIS: I think it's too high a

10 failure rate. But anyway, so maybe we should go on.

11 MR. WACHOWIAK: And it may very well be

12 too high. What we will do in this particular case is

13 when we buy a load driver card, it's a solid state

14 switch on the card from the DCIS manufacturer, we will

15 ask them to supply the data they have on failures of

16 those switches.

17 MEMBER WALLIS: And they may be quite

18 different from what is in this document.

19 MR. WACHOWIAK: Then we will do an update.

20 MEMBER WALLIS: Okay.

21 MR. WACHOWIAK: But, once again, that is--

22 we're trying to get as good a numbers as we can and

23 try to help out with that.

24 MEMBER WALLIS: Yes.

25 MR. WACHOWIAK: And in this particular

NEAL R. GROSS

PRA, the intent was to use data from past plants to show that we're not relying on some new advanced thing that hasn't been developed yet to be more reliable than the old stuff.

MEMBER WALLIS: Well, I guess the interest here is because one of your large LOCAs is really this generic common cause failure of the DPV load drivers, when they all decide to open up erroneously, spuriously. That is your biggest LOCA, is when you open up all these valves. Mysteriously, there is an instrument failure and it's not a trivial number you come up with. So that's why I'm asking the question. It doesn't seem to come from anywhere though. It starts off with a 10^{-6} which comes from nowhere anyway.

MR. WACHOWIAK: We can --

MEMBER WALLIS: I don't think we're supposed to get into this sort of level of detail today.

MR. WACHOWIAK: -- see what's there.

MEMBER WALLIS: I was picking it up as an example.

MR. WACHOWIAK: Yes.

MEMBER WALLIS: You can get into this level of detail with a lot of things. I'm just picking it up as an example. If I were a member of

1 the staff, I would look at this and say, well, wait a
2 minute, where does all this come from, because it
3 seems to give rise to an event which is not trivial.
4 Anyway, go ahead.
5 MR. WACHOWIAK: This allows us to do
6 online battery testing, so we can take one out of
7 service and still be single failure proof. Then, as
8 I said, at least three safety divisions plus the DPS
9 activates all the safety-related valves and I have got
10 an example on the next page. In the end, what we
11 believe is, and this is a belief right now, we'll be
12 testing this, is that the only way to fail ECCS will
13 be by common cause. Individual failures aren't going
14 to show up in the answer when we're done.
15 MEMBER WALLIS: It's a belief?
16 MR. WACHOWIAK: It's common cause within
17 these systems, yes, so you have got multiple
18 divisions, multiple processors simultaneously or
19 multiple data acquisition cards simultaneously or
20 multiple valves simultaneously.
21 MEMBER WALLIS: Yes, it's not really a
22 belief. It's something you hope you have designed
23 into the system.
24 MR. WACHOWIAK: From everything that I
25 have looked at, I don't see where that would not be

1 the case.

2 MEMBER WALLIS: And there is some analysis

3 behind it?

4 MR. WACHOWIAK: Yes.

5 MEMBER WALLIS: Okay.

6 CHAIRMAN APOSTOLAKIS: Actually, you can

7 say more. You can -- since your first estimate is 10^{-}

8 ^{8}, thereabouts, you can now ask yourself can I have a

9 common cause failure that will have a probability

10 greater than that one? But it doesn't have to be very

11 frequent anymore.

12 MR. WACHOWIAK: Right.

13 CHAIRMAN APOSTOLAKIS: Because you are

14 really in the realm of very rare events. And, again,

15 just as a reminder, the age of the earth's crust is

16 $3x10^{-9}$ years. So when you say 10^{-8}, you are beginning

17 to get close to that. So that is a question. I mean,

18 the broader question is that -- it was touched on

19 earlier, is really the stuff you are leaving out or

20 that you haven't -- not just you, but as a community

21 we haven't thought of, is it more than 10^{-8}. Is it

22 higher? That is a problem now, you know.

23 MEMBER WALLIS: It almost certainly is if

24 10^{-8} is the basis.

25 CHAIRMAN APOSTOLAKIS: Well, I mean, that

is the current estimate, so you worry about things you have left out that will change the current estimate.

MEMBER CORRADINI: But can I -- can you explain that to me, because I was looking at the summary about that. So can I say it back to you to make sure I understood the summary, because the summary is at the back somewhere.

CHAIRMAN APOSTOLAKIS: Yes, we had a discussion this morning about that.

MEMBER CORRADINI: So the summary of all the internal events is a little bit under 10^{-7}.

CHAIRMAN APOSTOLAKIS: Yes, but they also have done sensitivity analysis.

MEMBER CORRADINI: Right.

CHAIRMAN APOSTOLAKIS: They assumed all the human errors were one, the probabilities. They multiplied the squib valve failure rate by 10 and they did it again, and they got numbers. Some of them reached the 10^{-6}, higher than 10^{-6}. So our discussion this morning, at least I suggested that the probability distribution for the core damage event, in my mind at least, is some sort of a result from all these calculations. I can't really put a curve down, but I don't believe that the 95th percentile is $8x10^{-8}$ either. I believe it's somewhere higher because of

1 these other analyses.

2 So let's say the 95th percentile is 10^{-6}.

3 So the question now is, I mean, is this distribution,

4 even though it's in my mind, is this a robust

5 distribution? Is there any -- are there any failure

6 modes that will be revealed in the future that will

7 show that we have missed something? And now that we

8 are doing the assessment, we have to ask ourselves,

9 you know, if the baseline is 10^{-6} or lower, is the

10 stuff we have left out more frequent, because this

11 question always comes up.

12 And I think eventually you come down to

13 what we have been told, at least I have been told

14 since I joined the ACRS, that we grant the license

15 based on the fact that there was a review and the

16 plant met all the regulatory requirements, both

17 deterministic and probabilistic. Therefore, it is

18 safe enough, safe enough.

19 I think that is the end result really. I

20 mean, we shouldn't get hung up on the numbers. But

21 when you get to such low levels, I mean, the question

22 becomes inevitable. I mean, what have you left out

23 that is more frequent than that? That doesn't mean

24 that the guy who asks the question has the answer.

25 You know, sometimes people say I don't believe it.

NEAL R. GROSS

1 Well, yes, there are a lot of people who
2 are reviewing these things, most importantly our staff
3 here, and they presumably will be unable to find
4 failure modes that will be more frequent, because if
5 they do, then you guys will have to resolve that
6 issue.
7 MR. WACHOWIAK: So --
8 CHAIRMAN APOSTOLAKIS: So this is really
9 the community's, I think, thinking at this point.
10 MEMBER CORRADINI: Can I ask another
11 question?
12 CHAIRMAN APOSTOLAKIS: Yes, you can always
13 ask questions, Mike.
14 MEMBER CORRADINI: I am repeating. I just
15 don't want to repeat from this morning. So the thing
16 that got me was the external events was even lower
17 than the internal events, which surprised me. At this
18 level, it would strike me that all of the outside
19 activities would start bumping -- you would bump up
20 against them, but yet the estimate in the summary --
21 CHAIRMAN APOSTOLAKIS: Yes, it was very
22 low.
23 MEMBER WALLIS: Fire is too low, isn't it?
24 MEMBER CORRADINI: Right. But in the
25 current comment it is when the detail design is

1 considered fire and flood will go down, I thought.

2 CHAIRMAN APOSTOLAKIS: Well, Rick, do you

3 want to address that?

4 MR. WACHOWIAK: I can address that

5 particular piece.

6 MEMBER CORRADINI: If we put all these in

7 the southeast, I would think it would go up because of

8 extreme potentially unusual weather that tends to go

9 through the southeast.

10 MR. WACHOWIAK: So that would fall into

11 the --

12 MEMBER CORRADINI: Well, I'm just --

13 MR. WACHOWIAK: -- flood type category.

14 MEMBER CORRADINI: Yes.

15 MR. WACHOWIAK: That is a good question.

16 What we have listed on there are things that have

17 historically been considered external events. They

18 are actually internal fires in the building and

19 internal floods caused by pipe breaks and things like

20 that. They have been treated as external events.

21 MEMBER CORRADINI: That is site dependent.

22 MR. WACHOWIAK: Those aren't site

23 dependent.

24 MEMBER CORRADINI: Okay. Excuse me. That

25 answered the question. I understand the point.

1 MR. WACHOWIAK: Okay. Now, for site
2 dependent things, we have done -- for flooding we have
3 said that the siting of the plant must have a flood
4 level below. You know, the building needs to be
5 constructed above a certain flood level and there's
6 criteria associated with what.
7 So then what we would need to do when we
8 get the sites is then go back and see if there is
9 something that is different now from what we have
10 assumed and see if there is an impact there.
11 MEMBER CORRADINI: Okay.
12 CHAIRMAN APOSTOLAKIS: Now, Rick, you tell
13 us when to take a break, when it will be convenient.
14 It has been an hour and a half. There is a principle
15 that we shouldn't --
16 MR. WACHOWIAK: Let me do this.
17 MEMBER WALLIS: How long is going to take?
18 MR. WACHOWIAK: Let me do this squib valve
19 and then we'll take a break.
20 CHAIRMAN APOSTOLAKIS: Okay.
21 MR. WACHOWIAK: Okay. So the way that all
22 of our squib valves are now arranged is that each one
23 has four charges physically on the valve, four
24 independent charges, and they are connected, three of
25 them, to different divisions within the ECCS and one

1 division within diverse protection system.

2 So if we go through an example, let's say

3 Division 1 is out of service, Division 2 fails,

4 Divisions 3 and 4 -- that's an interesting way of

5 writing that. Divisions 3 and 4 --

6 MEMBER MAYNARD: Diversity.

7 MR. WACHOWIAK: -- diversity, that's

8 right, provide the two out of four signal. So

9 Division 3 sees that he has got a trip signal.

10 Division 4 sees that he has got a trip signal, okay,

11 and there's two trip signals. It's okay to go. And

12 in this particular case, Division 3 is what provides

13 the actuation if that was the scenario. And we can go

14 through any other different combinations of that and

15 any other combinations of 1-3, 1-3-4, 1-2-4, any of

16 these and we still get the same result. So you always

17 have --

18 MEMBER WALLIS: Two out of four.

19 CHAIRMAN APOSTOLAKIS: Yes.

20 MEMBER WALLIS: Any two out of four?

21 MR. WACHOWIAK: No, the valve, it's any

22 one of the four that needs to --

23 MEMBER WALLIS: Oh, it's any one of the

24 four.

25 MR. WACHOWIAK: So it takes two divisions

1 to tell. It takes two channels in the I&C system to
2 say yes, it's time to go.
3 MEMBER WALLIS: Okay. And one to actuate.
4 MR. WACHOWIAK: But any one of them can
5 now actuate the components.
6 MEMBER WALLIS: And if those two disagree?
7 MR. WACHOWIAK: Well, then that one would
8 be Division 1 out of service, Division 2 fails,
9 Division 3 fails. That's a different scenario.
10 MEMBER WALLIS: But if 3 and 4 disagree.
11 MR. WACHOWIAK: If they disagree, that
12 means one of them failed.
13 MEMBER WALLIS: Does it mean it failed?
14 MR. WACHOWIAK: They are measuring the
15 same parameters.
16 MEMBER CORRADINI: That's the definition.
17 MEMBER WALLIS: Well, they are just
18 measuring two -- if one says yes, one says no.
19 MR. WACHOWIAK: Well, it's still --
20 MEMBER WALLIS: You assume one must be
21 wrong, right? One must be wrong.
22 MR. WACHOWIAK: Then you get into a
23 scenario where Division 3 gets the signal two seconds
24 or three seconds before Division 4 does.
25 MEMBER WALLIS: Yes, that's right.

NEAL R. GROSS

1 MR. WACHOWIAK: So, yes, that could
2 happen, but it will wait until two of them say it's
3 time to actuate.
4 MEMBER WALLIS: Okay.
5 MEMBER ABDEL-KHALIK: Now, regardless of
6 whatever happens with the actuation systems, there is
7 no chance that more than one charge would go off.
8 MEMBER SIEBER: No, it could be more than
9 one.
10 MR. WACHOWIAK: More than one could go
11 off.
12 MEMBER ABDEL-KHALIK: More than one could
13 go off?
14 MR. WACHOWIAK: Right. And the
15 manufacturers of these valves that we have talked to
16 so far say that that's not a problem.
17 MEMBER SIEBER: Right.
18 MEMBER CORRADINI: It just opens faster.
19 MR. WACHOWIAK: No, it just opens.
20 MEMBER SIEBER: No, it opens shorter.
21 MEMBER CORRADINI: Shorter?
22 MEMBER WALLIS: Doesn't it?
23 MR. WACHOWIAK: Shorter.
24 MEMBER WALLIS: Okay.
25 MR. WACHOWIAK: So what they have told us

1 is that --

2 CHAIRMAN APOSTOLAKIS: So even if all four

3 go off, still?

4 MR. WACHOWIAK: Yes, it's okay.

5 MEMBER SIEBER: All four can go off.

6 CHAIRMAN APOSTOLAKIS: Still, I don't have

7 a problem?

8 MR. WACHOWIAK: That's correct.

9 MEMBER SIEBER: I don't know.

10 MEMBER WALLIS: Doesn't firing one --

11 MR. WACHOWIAK: In some configurations,

12 setting off one do set off some of the others. Other

13 configurations aren't like that. They have four

14 independent.

15 CHAIRMAN APOSTOLAKIS: And then I'm not

16 too familiar with this. Have squib valves been used

17 in nuclear plants?

18 MR. WACHOWIAK: Yes.

19 CHAIRMAN APOSTOLAKIS: They have.

20 MR. WACHOWIAK: In standby liquid control

21 systems, yes.

22 CHAIRMAN APOSTOLAKIS: Standby liquid

23 controls. Okay.

24 MEMBER WALLIS: Mostly.

25 CHAIRMAN APOSTOLAKIS: And we have never

1 had a problem with them?

2 MR. WACHOWIAK: Well, I don't --

3 MEMBER SIEBER: Not if we don't need them.

4 CHAIRMAN APOSTOLAKIS: Well, that's

5 enough. I'm sorry, what?

6 MEMBER SIEBER: As long as you don't use

7 them, they're okay.

8 MR. WACHOWIAK: Yes. They have had

9 testing programs and other --

10 MEMBER WALLIS: Was it a mass that uses--

11 MR. WACHOWIAK: No one has failed one when

12 they have needed it, but I don't know that anyone has

13 ever needed it.

14 MEMBER SIEBER: Right.

15 MEMBER ABDEL-KHALIK: Well, they have

16 failed when they tried testing them.

17 MR. WACHOWIAK: So there have been some

18 failures and we're looking into that. If I remember

19 right, most of those were the I&C failures and not

20 necessarily the valve failure, but I don't -- we have

21 to look into that.

22 CHAIRMAN APOSTOLAKIS: Is there another

23 industry that has more extensive experience?

24 MEMBER SIEBER: Yes, aerospace.

25 MEMBER WALLIS: Yes, aerospace has huge

1 experience.

2 MR. WACHOWIAK: And my understanding is

3 that all of your cars have these in them for your

4 airbags.

5 MEMBER SIEBER: All of them?

6 MEMBER WALLIS: Cars?

7 MR. WACHOWIAK: Cars for airbags.

8 MEMBER SIEBER: Oh, yes.

9 MEMBER WALLIS: It's a little smaller.

10 MEMBER SIEBER: So you would have squib in

11 the face.

12 MEMBER WALLIS: They are a little smaller.

13 MR. WACHOWIAK: Well, in some cases they

14 are smaller and in some cases they are not. The

15 deluge valves for the BiMAC, they are fairly small

16 valves, only an inch and a half, 2 inch valves. They

17 are not any different than what is in standby liquid

18 control systems now. Equalizing line is a 3 inch

19 valve. So it's about the same as what we have now.

20 The DPV is an 11 inch valve. That is certainly

21 different than what we have now.

22 MEMBER SIEBER: It's bigger than anything

23 that has been made, right?

24 MR. WACHOWIAK: I don't know that that's

25 the case, but anything that I have had experience

1 with.

2 MEMBER SIEBER: Okay.

3 CHAIRMAN APOSTOLAKIS: And the advantage

4 of these valves is that they are passive? Is that

5 what it is?

6 MR. WACHOWIAK: The --

7 MEMBER WALLIS: It can't be closed.

8 MR. WACHOWIAK: The advantage is once it's

9 open --

10 CHAIRMAN APOSTOLAKIS: It is passive.

11 MEMBER WALLIS: It's open. It can't be

12 closed once it's open, right?

13 MR. WACHOWIAK: -- it's open.

14 MEMBER SIEBER: Forever.

15 MR. WACHOWIAK: And it doesn't take that

16 much power to move to change them, so they are very

17 well-suited for battery powered systems.

18 MEMBER CORRADINI: Smaller initiation

19 signal.

20 MR. WACHOWIAK: Yes, small initiation

21 signal.

22 MEMBER SIEBER: And they are pretty fast.

23 MR. WACHOWIAK: And they are fast.

24 MEMBER ABDEL-KHALIK: You indicated this

25 morning that initiation of the valve will not cause

1 failure of the pipe in which the valve is installed,
2 and the reason is because this is one that has been
3 pressurized.
4 MEMBER SIEBER: Right.
5 MEMBER ABDEL-KHALIK: Now, if more than
6 one charge actually goes off simultaneously, is that
7 statement still correct, that there is no way that you
8 can fail the pipe in which the valve is installed even
9 though the pipe is filled with water regardless of
10 what the pressure in the line might be?
11 MR. WACHOWIAK: That would have to be a
12 design requirement for the pipe. I don't think we
13 could go with a system that didn't include that as a
14 design requirement.
15 MR. THORNSBURY: Is that a double negative
16 here or --
17 MR. WACHOWIAK: We could not build one
18 that did not have that as a design. That would be a
19 design requirement.
20 MR. THORNSBURY: Thank you.
21 MR. WACHOWIAK: So that actuation of these
22 valves does not invalidate any piping analysis.
23 MEMBER SIEBER: Well, the exploding of the
24 charge is relatively significant as far as pipe
25 strength. If the charge is pretty small, the part in

the valve that actually gets sheered off is pretty light compared to the rest of the valve.

MR. WACHOWIAK: That's correct.

MEMBER SIEBER: You know, so two charges, three charges, four charges, it seems to me like it would be getting done, right?

MEMBER WALLIS: Yes.

MEMBER BONACA: I have a question regarding the active systems. Would you expect, because they are not set to the label, they are a little different from the same systems which are installed right now in BWRs?

MR. WACHOWIAK: I don't expect there to be much detectible difference. Now, in most of the cases, the things that we're looking at for our active systems are going to be normally operating systems. CRD is always going to have one of its pumps in operation and FAPCS is always going to have one of its pumps in operation. So we will have good knowledge of the state of our active systems that we're taking credit for.

MEMBER BONACA: The reason I'm asking the question is that, you know, judging the safety for the plant, if I think about current BWRs being 10^{-5} with CDF, okay, I mean, this has to be a safer plant. You

are always looking at a shutdown risk analysis. I mean, everything that you could lament in the old plants that we didn't have, it's here in this plant, the isolation, double isolation and the pipes through containments, and then the active systems.

There are so many active systems lined up and, you know, after you exhaust them all, it takes a long time to address them all and then you have a passive system. And so I would expect that some reference to the existing plants will be important to make the safety case here, but you have really focused on this plant and addressed the lessons learned, it seems to me.

MR. WACHOWIAK: And that is one of the things that we tried to do early on in the conceptual design phase, is to eliminate things that we had problems with in the existing plants.

MEMBER BONACA: Yes.

MR. WACHOWIAK: Now, the 10^{-5} that you talk about for those plants also includes the non-safety-related systems. So it's credit for safety and non-safety.

MEMBER BONACA: Right.

MR. WACHOWIAK: So that 10^{-5} would be analogous to our 10^{-8}.

1 MEMBER BONACA: Right.

2 MR. WACHOWIAK: Not the other

3 sensitivities that were done without the non-safety

4 system.

5 MEMBER BONACA: Yes. And I can say that,

6 you know, all these things you have added will justify

7 the difference. I'm only saying that they have to buy

8 something and the biggest issue to me is, in fact, the

9 squib valves. I mean, that is something that, you

10 know, the point you made about common causes. It's a

11 very important one as to the pursuit, but, certainly,

12 this is, you know, a different kind of animal.

13 Everything that you would like to have is there.

14 MR. WACHOWIAK: Okay.

15 VICE CHAIRMAN SHACK: You could activate

16 half of them pneumatically.

17 MR. WACHOWIAK: Well, there are issues

18 with that and we do have pneumatic valves in this

19 plant. The isolation condenser is a pneumatic valve

20 system, so it's not a squib actuated system, and many

21 of the containment isolations are pneumatically

22 operated. For our pneumatic systems, we have a

23 similar arrangement to this, except it's using

24 different arrangements of solenoid valves.

25 MEMBER CORRADINI: But is the requirement

1 there that you switch to pneumatic if you want to
2 close up again where these are once open, stay open?
3 MR. WACHOWIAK: Yes.
4 MEMBER CORRADINI: Is that the basics of
5 what you're saying?
6 MR. WACHOWIAK: That is where we would
7 make that decision, is if you want it to be able to be
8 used again, you would make it pneumatic. If you want
9 it to be -- if you only need it as a one shot, then
10 you would make it --
11 MEMBER CORRADINI: But you really do
12 expect to use the isolation condensers during the life
13 of this plant.
14 MR. WACHOWIAK: That's right.
15 MEMBER CORRADINI: You don't really plan
16 if that --
17 MR. WACHOWIAK: Yes. We're not planning
18 on using -- we're not planning on needing any of the
19 squib valves, not planning on it. Those are for
20 accidents, things that happen that we didn't plan for.
21 So, anyway, I guess that is what I have here.
22 One last thing associated with this. We
23 can't make this kind of a scheme work with motor-
24 operated valves. We can't really hook four motors and
25 things like that. It didn't work for us. So in this

1 design change that the plant did to incorporate this,
2 all motor-operated valves were replaced by some sort
3 of a pneumatic valve.
4 MEMBER WALLIS: Oh.
5 MR. WACHOWIAK: All safety-related motor-
6 operated valves. So in Rev 1 if you see anything
7 where we had a safety-related motor-operated valve, it
8 will be replaced by something that is pneumatically
9 operated.
10 MEMBER SIEBER: And fail safe.
11 MR. WACHOWIAK: It's --
12 MEMBER SIEBER: And fail safe.
13 MR. WACHOWIAK: It depends on the
14 application. Some fail open, some fail closed and
15 some fail as is.
16 MEMBER SIEBER: They fail safe. They
17 could be open or closed.
18 MR. WACHOWIAK: Some fail as is.
19 MEMBER SIEBER: Okay. Open or closed.
20 MR. WACHOWIAK: Wherever they are, yes,
21 and we have different criteria for those and different
22 designs for those types of valves. So this would be
23 a convenient break time and I will try to step it up.
24 CHAIRMAN APOSTOLAKIS: That's fine.
25 (Whereupon, at 4:39 p.m. a recess until

1 4:57 p.m.)

2 CHAIRMAN APOSTOLAKIS: Ready? Okay. We
3 are back in session. Rick, it's your show.

4 MR. WACHOWIAK: Okay. In this next
5 section what I want to talk about now is how the DCIS
6 system is connected together and how the signals are
7 processed and transferred, and maybe this will get
8 back to answering some of the questions on how might
9 we deal with obsolescence? How might we deal with
10 maintenance? How might we deal with -- because we
11 will see how -- the way it's segmented and divided and
12 put together that there probably is the ability to
13 upgrade the system without scrapping and rebuilding
14 among other things. So let's go through what I know.

15 CHAIRMAN APOSTOLAKIS: What is it that you
16 know about the instruments in control?

17 MR. WACHOWIAK: Well, when we were talking
18 about these things, we have these very, very smart
19 instrument in control people that know a whole lot of
20 stuff about instrument in control. And when you ask
21 them to describe the instrument in control system, not
22 only do you get what you need to build a PRA, but you
23 get about five times more. What I tried to do was to
24 concentrate what he said into something that we think
25 we might be able to use for the PRA, and this is the

1 distillation of that.

2 So the system uses some different

3 concepts. We have things called a chassis. A chassis

4 is a rack-mounted computer. These are examples of

5 types of chassis that we would have. So you have got

6 the rack-mounted computer. It goes in the rack and

7 each cabinet now has a rack. So a cabinet can have

8 one or more chaises in it. And then the division will

9 have multiple cabinets within that division.

10 Okay. So the first thing I want to talk

11 about is the chassis. The chassis is just basically

12 a back plane type computer and cards are plugged into

13 it. And in one example we were shown there is a

14 processor card, a memory card. They could be both on

15 the same thing, but it's a replaceable card. Okay?

16 Then in this type, a data acquisition chassis, would

17 have one or more I/O cards that can take one or more

18 digital or analog signals into them.

19 (Whereupon, at 5:00 p.m. the meeting

20 continued into the evening session.)

21

22

23

24

25

1 E-V-E-N-I-N-G S-E-S-S-I-O-N

2 5:00 p.m.

3 MR. WACHOWIAK: And then we have the
4 communication cards and this is really the part of the
5 guts of how these things are strung together. These
6 communication cards aren't just for passing
7 information. These are what they call a reflective
8 shared memory system.

9 So this card has some number of megabytes
10 on it, a gigabyte, 128 megabytes, whatever we would
11 specify, and all of them in the system would have that
12 same amount or that same memory, all with the same
13 memory locations so that any time any one of these
14 cards gets updated for that location in memory, it
15 takes this dual fiber ring and sends that information
16 out in both directions and within nine milliseconds
17 they tell us every card within that ring has the same
18 information on it.

19 So each chassis in a channel or in a
20 division, each chassis in a division, knows, has the
21 potential to know, everything that is in that
22 division. For backup purposes, we have two of these
23 cards in here and the -- what I don't know yet is how
24 it decides which ones of those two cards is the one to
25 use at any given time, but they should show exactly

1 the same thing.

2 In the data acquisition chassis, the only

3 thing the processor does is takes a signal or it takes

4 a converted analog or digital signal from this card

5 and puts it in this memory. No decisions are made on

6 these processors. It's just moving information.

7 MEMBER SIEBER: Do you make a decision as

8 to when to go and get it?

9 MR. WACHOWIAK: It's on a fixed time

10 scale. This is a deterministic system.

11 MEMBER SIEBER: So it updates every

12 second, every tenth of a second?

13 MR. WACHOWIAK: Whatever the schedule is.

14 It's some number of -- some small number of

15 milliseconds. It gets this signal, gets this number

16 from this card, puts it on this card and that's what

17 it does.

18 MEMBER SIEBER: Okay. Now, you said that

19 the transducers, they can be digital or analog?

20 MR. WACHOWIAK: Yes.

21 MEMBER SIEBER: And if it's a temperature

22 transducer, I take it there is a cold junction some

23 place.

24 MR. WACHOWIAK: Yes.

25 MEMBER SIEBER: Or an RDB and 4 to 20 goes

1 to the I/O card?

2 MR. WACHOWIAK: Yes, that's the way it was

3 explained to me.

4 MEMBER SIEBER: But that's analog all the

5 way to the I/O card?

6 MR. WACHOWIAK: That's my understanding,

7 yes.

8 MEMBER SIEBER: Do you have digital

9 transducers in the field?

10 MR. WACHOWIAK: What I was told is that we

11 can have digital transducers in the field, but none

12 have been identified to me.

13 MEMBER SIEBER: So you don't know? You do

14 or you don't think? You don't know?

15 MR. WACHOWIAK: It's possible. I haven't

16 seen any.

17 MEMBER SIEBER: Okay.

18 MR. WACHOWIAK: But I don't know.

19 MEMBER SIEBER: But the I/O cards would be

20 different for a digital signal?

21 MR. WACHOWIAK: Yes, there are different

22 I/O cards for different types of signals. The I/O

23 card would be matched to the right signal.

24 MEMBER SIEBER: Transducer.

25 MR. WACHOWIAK: To the right transducer as

1 part of the field. This is where the field testing,
2 when it's installed, or the installation testing, the
3 biggest thing there is to make sure that this
4 transducer is hooked to the right point in that card.
5 MEMBER SIEBER: Okay. Now, does the I/O
6 card follow the parameter or does it sample the
7 parameter?
8 MR. WACHOWIAK: That's a good question.
9 The way it was explained to me, it would sample. Now,
10 I would need to verify that.
11 MEMBER SIEBER: Well, how does it know
12 when to sample? From the CP, the processor? Send the
13 signal to the I/O card? The I/O card goes and asks
14 the --
15 MR. WACHOWIAK: I would --
16 MEMBER SIEBER: -- transducer and acquires
17 it, puts it in digital form and then hits an interrupt
18 on the processor? Is that how that works?
19 MR. WACHOWIAK: That was part of the
20 information that Ira told me that I purged from my
21 mind.
22 MEMBER MAYNARD: It's probably the
23 parameters, just set up the sampling stuff on a
24 schedule.
25 PARTICIPANT: They're already programmed

1 in.

2 VICE CHAIRMAN SHACK: No, but sometimes

3 you sample on the I/O card.

4 MEMBER SIEBER: That's right.

5 VICE CHAIRMAN SHACK: And then the

6 processor grabs the value off, an average value off of

7 it.

8 MEMBER SIEBER: That's right.

9 VICE CHAIRMAN SHACK: I don't --

10 MEMBER SIEBER: It's whatever is on the

11 I/O card at the time. The sampling schedule can be

12 set up in the transducer or even digitize it in the

13 transducer and just sort of skip the I/O card

14 function, other than some simple gate. Well, you

15 don't know?

16 MR. WACHOWIAK: So I don't know.

17 MEMBER SIEBER: Let's move on.

18 MR. WACHOWIAK: The other thing about this

19 is that the way the power supplies are connected, each

20 chassis has two power supplies. The way that the

21 batteries are set up within a division is we have a

22 Division 1A battery and a Division 1B battery. They

23 are both part of the 72 hour battery, but they are

24 distinct units. The way this is set up is that if

25 both batteries are in service --

1 MEMBER WALLIS: These are D/C now?

2 MEMBER SIEBER: Yes.

3 MR. WACHOWIAK: This is a -- well --

4 MEMBER WALLIS: Your key is a little hard

5 to understand.

6 MR. WACHOWIAK: It's not D/C. It's a 120

7 volt inverted A/C system.

8 MEMBER WALLIS: It's an A/C system.

9 MR. WACHOWIAK: That is being supplied by

10 regulated power backed up by battery.

11 MEMBER WALLIS: Okay.

12 MR. WACHOWIAK: So if it's operating on

13 the battery, each one of these power supplies

14 essentially acts or operates at 50 percent capability.

15 MEMBER SIEBER: Sort of.

16 MR. WACHOWIAK: Sort of. So that if we

17 lose something in one of these channels here, some

18 power source or we lose the power supply, we haven't

19 lost anything in here. It still operates now at full

20 power.

21 MEMBER SIEBER: Right.

22 MR. WACHOWIAK: No interruption of this

23 function, but it announces that there is a failure in

24 there and the operators have time to fix whatever is

25 in that. These are hot swappable power supplies and

we wouldn't have any loss of function when they go to repair that.

MEMBER SIEBER: This isn't a station battery, I take it. This is just a battery for this system?

MR. WACHOWIAK: Station batter.

MEMBER SIEBER: A station battery? There ain't too much to fix it and operate it?

MR. WACHOWIAK: The fixing part I meant was in the power supply or if there was some other short in the system on down, they could go and unshort the system. Remember, it's a 120 volt system. So it is normally being powered from off-site power.

MEMBER SIEBER: Right.

MR. WACHOWIAK: Through a regulating transformer and there is a battery backup that is sitting there solid state switched in if the off-site power goes away. So you probably wouldn't detect a battery failure out here at the downstream instrument. The battery failure would be detected somehow.

MEMBER SIEBER: Now, then if you didn't have A/C power and the battery failed, the other one would discharge twice as fast.

MR. WACHOWIAK: It would discharge twice as fast.

1 MEMBER SIEBER: Right.

2 MR. WACHOWIAK: So in that case, Division
3 1 would only last for 36 hours versus 72. We still
4 call that a failure. Okay.

5 MEMBER SIEBER: Okay.

6 MR. WACHOWIAK: So that's the way that
7 these are all set up. We have a different type of
8 chassis, which would be a load driver chassis. This
9 is what tells the things in the field to actuate. It
10 has got a processor. It has got the load driver cards
11 and it has got the same kind of communications cards.

12 So what this processor does is it looks at
13 the communication card and says do I have something
14 that is telling me to actuate this switch? If it's
15 there, it actuates it. If it's not there, it doesn't
16 actuate the switch. So it's just looking at the
17 memory and deciding which switches to turn on. This
18 part, I'll show how it's supplied in a minute.

19 One of the things that the designer said
20 is that you can -- you don't have to segment it this
21 way into data acquisition, chassis and load driver.
22 You could intermix these things. We're trying to
23 determine what is the best way to do this and in my
24 mind, within a chassis you shouldn't mix the two
25 different types of functions, because then that makes

the processor logic a little more difficult. We may have prone to some errors or some other things there.

I would prefer to see those two types of chassis separate. Right now they said they can do that, so that you would have -- if the computer has I/O cards in it, it's not going to have -- if the chassis has I/O cards in it, it won't have load driver cards in it.

MEMBER SIEBER: On the other hand, a single chassis may have thousands of I/O cards.

MR. WACHOWIAK: That's correct.

MEMBER SIEBER: Okay. So this is not three big deals.

MR. WACHOWIAK: This is an example here and how many get packed, packed in, is that the right way to say it, how many get put into there is based on several things. Proximity of what you're trying to pick up out in the field is one thing, and also all these systems need to be passively cooled. We don't necessarily want to have active cooling to keep the thing down, so we would --

MEMBER SIEBER: Keeping it safety-related diesel, keeping all this other stuff cool.

MR. WACHOWIAK: Well, that would be the next presentation. But, anyway, so we can segment it

1 out that way for heat density, I guess, if you will.
2 MEMBER SIEBER: Okay.
3 MR. WACHOWIAK: But that's one of the
4 considerations.
5 MEMBER SIEBER: Now, for each you have two
6 power divisions that go to the four channels that you
7 have.
8 MR. WACHOWIAK: We have --
9 MEMBER SIEBER: You have four channels,
10 right?
11 MR. WACHOWIAK: We have four channels.
12 MEMBER SIEBER: Does that mean four of
13 these cards, I/O cards and the four load driver cards,
14 one for each channel?
15 MR. WACHOWIAK: Yes.
16 MEMBER SIEBER: Okay. And they are in
17 different racks?
18 MR. WACHOWIAK: Different racks, different
19 rooms.
20 MEMBER SIEBER: And each one is powered by
21 both divisions?
22 MR. WACHOWIAK: No. This is considered
23 one division. We have four of these paired divisions.
24 MEMBER SIEBER: But you don't have eight
25 station batteries.

1 MR. WACHOWIAK: There physically are eight
2 different batteries.
3 MEMBER SIEBER: Okay.
4 MR. WACHOWIAK: Each division has two that
5 are loaded at 50 percent each.
6 MEMBER SIEBER: Oh, wow, what a battery.
7 MR. WACHOWIAK: That's correct.
8 MEMBER SIEBER: Okay.
9 MR. WACHOWIAK: Okay? Now, the next one
10 is the logic chassis which is where the decisions are
11 made. So this would be a different place and I will
12 show how that is set up in a minute, but it has got
13 the same sort of thing, processor, memory and just
14 communication cards.
15 This is the communication cards we saw
16 before, so it's -- the things in the field are setting
17 memory locations here. This processor reads these
18 memory locations, makes a decision, posts its decision
19 to this interdivisional ring and then looks to see if
20 any of the other divisions also came to the same
21 conclusion. If so, the processor then tells its own
22 division go ahead and actuate. So in the ECC --
23 MEMBER SIEBER: So that sits in between
24 the I/O card and the load driver card?
25 MR. WACHOWIAK: Yes. Say that again.

1 MEMBER SIEBER: It sits in between the I/O
2 card and the load driver card.
3 MR. WACHOWIAK: That's right, and since
4 it's on a ring --
5 MEMBER SIEBER: Yes.
6 MR. WACHOWIAK: Maybe it's on the end,
7 maybe it's in -- yes, it's in between.
8 MEMBER SIEBER: Now, if an I/O card is
9 acquiring the signal from the transmitter, putting it
10 into its memory and this thing is saying I need this
11 parameter to decide whether I got to do something --
12 MR. WACHOWIAK: Yes.
13 MEMBER SIEBER: -- what happens when they
14 both try to read that memory slot at the same time?
15 Is there interference or is it sequenced or is it all
16 timed out or how do you do that?
17 MR. WACHOWIAK: It's deterministically
18 timed out. The communications cards write to all the
19 cards on a fixed interval and while they are writing
20 on their fixed interval, this guy isn't reading --
21 MEMBER SIEBER: He will be waiting.
22 MR. WACHOWIAK: -- in between.
23 MEMBER SIEBER: This one will be doing
24 something else.
25 MR. WACHOWIAK: Right.

1 MEMBER SIEBER: Okay.

2 MR. WACHOWIAK: And that is all on a

3 deterministically evaluated --

4 MEMBER SIEBER: So you have got one clock

5 for the whole system, for everything, one clock on

6 each division.

7 MR. WACHOWIAK: Within a chassis there is

8 one clock.

9 MEMBER SIEBER: And you would have to have

10 that same clock go through every -- you have an I/O

11 chassis and a driver chassis and a logic chassis.

12 They would all have to have the same clock, right?

13 MR. WACHOWIAK: The way it was explained

14 to me is that they do not have to have the same clock.

15 MEMBER SIEBER: Well, then they will

16 interfere.

17 MR. WACHOWIAK: No.

18 MEMBER WALLIS: Can I ask the question I

19 asked before? What does all this description have to

20 do with the PRA?

21 MEMBER SIEBER: If you don't know what it

22 is --

23 MEMBER CORRADINI: You don't know how to

24 get a failure mode.

25 MEMBER WALLIS: Yes, but unless you talk

1 about the failure modes, I don't know what it has got
2 to do with the PRA.
3 MR. WACHOWIAK: Okay.
4 MEMBER SIEBER: Well, you have to
5 understand the hardware a little bit here.
6 MEMBER WALLIS: Well, I know, but this is
7 kind of straightforward, isn't it? The interesting
8 thing is what can go wrong.
9 MR. WACHOWIAK: That's right.
10 MEMBER WALLIS: Okay.
11 MR. WACHOWIAK: And that is really a
12 conversation that I have with the I&C guys also. What
13 happens if we have a failure here?
14 MEMBER CORRADINI: So can you educate him,
15 which is educating me about all these clocks and
16 everything? I'm still kind of curious.
17 MR. WACHOWIAK: Within this particular
18 card here, every large number of milliseconds this
19 processor knows it has a window to read from this
20 communication card. Then these communication cards
21 are getting signals on the fiber system in a fixed
22 frequency.
23 MEMBER SIEBER: And putting it into
24 memory.
25 MR. WACHOWIAK: And putting it in this

memory.

MEMBER SIEBER: Right.

MR. WACHOWIAK: Which is not conflicting with this one. However, when this card puts something out onto the fiber network may not be exactly the same time when a different cards puts out. So each chassis can work asynchronously, but the communication is set up fast enough that the processor won't know about any asynchronous communications between the other divisions.

Each parameter only has one memory location, so you can't have -- and so the communication card knows when I'm going to write into the memory location, when I'm going to read from the memory location. You can't have things trying to read and write at the same time. The card handles that arbitration.

MEMBER SIEBER: And if something is happening in the plant where all these transducers are changing value, that does not change the mode of operation of the processors anywhere.

MR. WACHOWIAK: That is correct. Everything works on a fixed frequency.

MEMBER SIEBER: So you can't plug the machine.

1 MR. WACHOWIAK: You can't plug this
2 machine. It's not set up with a data collision
3 detection rerouting system.
4 MEMBER SIEBER: Right.
5 MR. WACHOWIAK: It's not the kind of
6 system it is.
7 MEMBER CORRADINI: Okay.
8 MR. WACHOWIAK: Okay?
9 MEMBER SIEBER: Moving on.
10 MR. WACHOWIAK: Moving on. Let's move to
11 the data acquisition cabinet. You can have multiple
12 chassis within a physical cabinet. So the rack is
13 there. You put the chassis inside the rack. Power
14 comes in. There is no special power for the cabinet.
15 It's just distributed into each of those chassis.
16 They have their own power supplies. I had examples of
17 sensors here.
18 And the way that the transmission is done
19 through these cards is it is daisy chained through all
20 the different cards and there's two of them, so it's
21 daisy chained through those cards. So if any one
22 particular link fails, well, you get the information
23 from back the other direction. If you end up failing
24 both connections on that link somewhere, then the
25 information is still transferred along the other data

ring.

So you end up actually having to have between two and three communication failures before you would fail the communication on that ring. All these communications are alarmed. The operators know when it happens. Cards are hot. I'm not sure how the connections are hot swappable, but the cards are hot swappable and they can make those repairs.

So you would think that there would be a low likelihood that any of the cards would be sitting there in a failed state at the time of the accident. And that's -- one of the things we're putting into our PRA model though is what is the probability that any of these things would be unavailable at the time.

MEMBER SIEBER: I take it from a PRA standpoint, just knowing this kind of architecture gives you some handle on what the failure probabilities are regardless of what the confluence of the cards are.

MR. WACHOWIAK: Yes. We can know how the logic gets put together and then we can evaluate different individual failures on the cards.

MEMBER SIEBER: Okay.

MR. WACHOWIAK: A load driver chassis is a little different. First, notice it's a load drive

1 pair, okay, and the reason for this is mainly we don't
2 want spurious actuations. So when the computer or the
3 logic processor makes a decision that one of these
4 squib valves is supposed to actuate, it tells this
5 load driver and the other load driver on the opposite
6 side or within the division.
7 It tells two load drivers to go ahead and
8 actuate. Both of those have to get the actuation
9 signal in order to actually get the signal out to the
10 field. This is done a little differently here. This
11 cabinet has a set of power supplies in here and those
12 are for the equipment out in the field.
13 The reason that they have their own power
14 supply versus using the power supply in the computer
15 card itself is mainly because of the way these squib
16 valves operate. They take an initial surge of
17 current, that kind of acts like a dead short, and the
18 response of this power supply needs to be much
19 different than the response of the power supply that
20 is in the chassis.
21 So with this arrangement, this is a very
22 fast acting power supply that the chassis -- then the
23 computers don't see any fluctuation in the voltage
24 while squib valves are operating. Otherwise, you
25 might get into a situation where everything just all

1 trips off on some kind of a funny voltage fluctuation.
2 So we have precluded that by using different types of
3 power supplies here.
4 The other thing that makes this nice is we
5 can separate this in terms of fire protection. If we
6 put -- if we have a fire that starts in this cabinet,
7 it could potentially short out some of these load
8 drivers.
9 MEMBER SIEBER: Yes.
10 MR. WACHOWIAK: But we don't want an
11 actuation on a fire in that cabinet, so we put the
12 other load driver in a different cabinet and we will
13 evaluate whether it needs to be in a different room or
14 somewhere different.
15 MEMBER SIEBER: Different space.
16 MR. WACHOWIAK: Different, somewhere. And
17 also what we want to evaluate is how many in a series
18 we would need to do. The DPVs, I'm starting to lean
19 toward having three load drivers especially on DPS
20 confirmed that it's supposed to go.
21 But what the manufacturers of these tell
22 us is that if the fire starts in this cabinet and goes
23 to propagate to the other cabinet, the first thing
24 that we're going to lose is these connections that are
25 hooked up to these things, and before the fire would

1 actually propagate to here, you would lose the
2 continuity and there would be a very low likelihood
3 that the propagated fire would actually be able to --
4 MEMBER SIEBER: Wouldn't you get hot
5 shorts? I mean, you would get all kinds of things in
6 a fire.
7 MR. WACHOWIAK: You can, but if you got a
8 hot short anywhere in this cabinet, because these
9 switches are all still open, the hot short wouldn't do
10 anything. You have to get a fire that can physically
11 go from here to here without destroying the stuff in
12 between.
13 MEMBER SIEBER: Or you could have a fire
14 in one and a failure in the other.
15 MR. WACHOWIAK: Fire and a failure would
16 do it, too. That's why in the DPVs I'm trying to see
17 if they can accommodate three. The load driver cards
18 really aren't all that expensive on the scale of a
19 nuclear power plant, so I think we can afford a few of
20 them.
21 MEMBER SIEBER: So you plan to cover all
22 three things, hot short, SCRAMS and others?
23 MR. WACHOWIAK: That's correct.
24 MEMBER SIEBER: Okay.
25 MR. WACHOWIAK: The last one here is

1 identifying -- and we talked about this a little bit,
2 the four divisions of where the processors make their
3 decisions. There is this other ring that is between
4 those. Some have suggested that this is some way of
5 pumping data from this channel to this channel. That
6 is not really what it's doing. This channel is
7 posting data to the ring and this channel is then
8 reading what is on the ring. This channel can't tell
9 this one what to do. It's just identifying what it's
10 doing.
11 And the way these cards are all set up,
12 every processor is hard coded so that it can only read
13 and write to certain places on those cards. They all
14 have check sums within them. Everything plugs
15 together. It does a check sum series on the whole
16 system. If you try to plug the card that is supposed
17 to go in Division 2 into a Division 1 chassis, it will
18 give you an error and say no, you can't continue with
19 this. This system is still down. So there's all
20 sorts of protection in here for making the wrong
21 choices.
22 Finally, the way the ring is set up in the
23 channel, we had this cabinet here. You know, it
24 passes between the different cabinets. These are
25 typically places like in the reactor building. This

is in the control building, so they are located in different places, the way the cabinets, you know, provide their power out to the field.

One thing, the main thing in here that I wanted to point out is there can be any number of any of these cabinets. It doesn't have to be one, but it can be one. Right now we're trying to put together our first scoping PRA model of this to determine what is the worst case.

Is it to put everything in one cabinet or is it to distribute it to a bunch of cabinets? We're still not sure which would provide the worst case. What my feeling is or my belief is is that we're not going to see much difference between either of those two configurations.

MEMBER SIEBER: That's your hope.

MR. WACHOWIAK: From what I have seen so far, I can't see why it would be much different. Another thing is that these other cabinets here, the logic and load driver cabinets, I said within a chassis we didn't want to mix the types, but within a cabinet we can put a data acquisition chassis inside one of these logic or load driver cabinets to do various things like we would like to know -- announce to the operator is that cabinet door is open.

1 That cabinet door should never be open
2 unless the control room sent somebody there to do
3 maintenance. There is no reason for that cabinet to
4 be open, so monitoring inside the cabinet. We can
5 also monitor temperature in the cabinet. We can put
6 a smoke detector in the cabinet. So if the cabinet
7 detects that it's on fire, maybe you shut off the load
8 driver on the other side so that even if it
9 propagates, you can't get anything.
10 We don't know. We're still looking at
11 what to do with those different things, but we at
12 least know that there are certain other things that we
13 want to put in there to let the operators know what is
14 going on inside those cabinets.
15 MEMBER SIEBER: Now, you said you could
16 locate these cabinets any place. Can you locate
17 anything in the harsh environment? For example, in
18 containment, the only thing you're going to have in
19 there is transducers and no other --
20 MR. WACHOWIAK: That would be correct. We
21 would only -- so this would not be in the containment
22 as far as I know unless there are some --
23 MEMBER SIEBER: Any part of it.
24 MR. WACHOWIAK: Yes, they would have to do
25 something other than what we're planning on buying if

1 they are going to put it in the containment.

2 MEMBER SIEBER: Okay. And other harsh

3 environments would be the, you know, reactor building

4 and outside containment where radiation zones might

5 be.

6 MR. WACHOWIAK: We have got people right

7 now looking at the dose maps in the reactor building

8 and the I&C group is trying to locate the cabinets

9 away from harsh or high radiation zones, but they have

10 a criteria for these. The manufacturers have supplied

11 us, at least so far, the EQ data for what they are

12 planning to give.

13 MEMBER SIEBER: So is it fair to say that

14 nobody has looked into these yet?

15 MR. WACHOWIAK: It would be fair to say

16 that other than what room these cabinets are in, the

17 control building, this is up in the air.

18 MEMBER SIEBER: Okay. Thanks.

19 MR. WACHOWIAK: Okay. So that was all I

20 had with that. Right now what we're planning on or

21 what we're doing with that is we're building a stand

22 alone model of the failures of the hardware within

23 that system to try to help, to see if we can help the

24 designers determine what is the optimal configuration,

25 and then set it up that it's flexible enough that if

NEAL R. GROSS

1 they change the configuration that we can make those
2 changes and have some input.
3 It's likely from what we have seen so far
4 with just the numbers of data input points and the
5 load drivers and all of the rest of those things that
6 that is going to be a pretty big model, especially in
7 the communications side, because to fail to
8 communicate from this transducer to the processor, you
9 have got to fail two different counter-rotating rings
10 going both ways with all sorts of different cards and
11 things in between. It's a pretty big model and it's
12 going to get very large very quick.
13 We think we can model this and do it stand
14 alone and do some investigation on that individual
15 model. When we actually go into the main PRA, our
16 thoughts are that maybe we wouldn't put the entire
17 thing in there. Maybe we would put some limited set
18 of the other failures. Then we have to figure out
19 then what we do with the external events and with the
20 RTNSS and all the rest of those things, so that is
21 still a question. But how we would put such a big
22 model into the main PRA and have it do anything for
23 us, we're still contemplating.
24 So after we have gotten through with all
25 these changes, the top sequences of the cutsets are

affected. Basically, for those ones that we talked about with the loss of feedwater, loss of the -- we add one more failure mode. It's the loss of the isolation condensers get added to each of those, so they will be dropped.

I have done a scoping calculation on what the impact of that would be and it looks like those sequences will be brought down by at least an order of magnitude, maybe a little bit more. We're still looking at how that is going to go.

The DCIS design that we're putting in now provides additional protection from what we have had, what we have in the current model, but we don't think it's going to have a major impact since what we have in the current model only showed up as common cause failures anyway. So adding something else that only shows up as common cause failures anyway is probably not going to make a big difference.

This revised common cause model, depending on where we find the discrepancies between what we have now and what we're going to use, this may offset some of the -- what we're doing with the others. So I am not going to say all the top ones go away. Maybe they are replaced by some other top, other ones, and the numbers may not change too much.

1 Level 1 model results will be available in
2 April. Now, that is that other handout that I gave
3 out, I wanted to talk about here. It's marked as the
4 -- it looks like this.
5 MEMBER SIEBER: For the PRA.
6 MR. WACHOWIAK: This outlines what the
7 schedule is for the Rev 2 in the PRA. Okay. Just an
8 idea of where we are right now, Chapter 19, Rev 2,
9 which matches Rev 1 of the PRA so that's no change to
10 anything you had before. This is going in. We're
11 licensing letters and things about that now. There is
12 nothing really new in the PRA from that. It's still
13 matches PRA Rev 1.
14 Out in April we expect to have the new
15 Level 1 model internal events plus quantification done
16 and, at that point, we'll be submitting those chapters
17 to the staff. Because of the time line for writing
18 the SER, they also need information for Chapter 19.
19 The rest of the chapters are going in even earlier in
20 February, but this is where we can support this.
21 What we're going to do is we're going to
22 take the results from the Level 1 and then knowing
23 what we know from Level 1 and how it would propagate
24 into a Level 2 and how the external events would work,
25 we're going to extrapolate what we -- the Revision 1

other parts of the model based on the Revision 2 internal events results, and write a Chapter 19 based on that extrapolation.

Because of the level of detail in Chapter 19 for the PRA is at a fairly high over -- it's not a high level of detail. It's more of an overview. We think we're going to be successful at this, at making a good extrapolation here, but it is a risk of maybe missing something in Chapter 19. Then --

MEMBER WALLIS: Isn't it Chapter 21?

MR. WACHOWIAK: This is Chapter 19 of the DCD.

MEMBER WALLIS: Is Chapter 21 irrelevant?

MR. WACHOWIAK: Chapter 21 that incorporates.

MEMBER WALLIS: This is the BiMAC, is it not?

MR. WACHOWIAK: Chapter 21, yes. Chapter 21 that incorporates the Rome review, the additional Rome reviews that we have done, is being worked on now. We will likely be able to have that done at about the same time as the Level 1 with internal events. The question though is when do we want to put the BiMAC testing results into Chapter 21. Those results are expected out here in the September time

1 frame, so our decision is do we want to have a Chapter
2 21 of the PRA back here that doesn't include the BiMAC
3 test controls.
4 MEMBER WALLIS: When are we going to look
5 at the credibility of this whole BiMAC or do we need
6 to?
7 CHAIRMAN APOSTOLAKIS: We will have a
8 subcommittee meeting in the next two, three months
9 focused on Level 2 PRA.
10 MEMBER WALLIS: Focused on the BiMAC,
11 okay, focused on the Level 2.
12 CHAIRMAN APOSTOLAKIS: No, Level 2 PRA.
13 MEMBER WALLIS: Okay. Okay.
14 CHAIRMAN APOSTOLAKIS: This is just Level
15 1.
16 MEMBER WALLIS: Okay. Okay.
17 MR. WACHOWIAK: Now, in the rest of the --
18 CHAIRMAN APOSTOLAKIS: Digital I&C.
19 MEMBER WALLIS: Oh, okay.
20 MR. WACHOWIAK: I have lines scattered
21 throughout here without dates until the end, because
22 right now we're working on rebaselining our schedule
23 for the DCD or not for the DC -- for the COLA
24 applications, and a lot of that rebaselining effort is
25 going to help me determine what happens in these

1 various other milestones and what they are going to be
2 throughout next year.
3 But our end date is basically the end of
4 September, we need to have the full Rev 2 of the PRA
5 completed to support the COLA for the two customers
6 that we have right now. So we're working our schedule
7 and adding our personnel to support that.
8 CHAIRMAN APOSTOLAKIS: When you say full
9 Rev 2, you don't mean just a Level 1 PRA?
10 MR. WACHOWIAK: No, I mean the other
11 chapters. So this would be like Chapters 2 through 6
12 or 2 through 7 and maybe we get 8 and 9, 8, 9 and 10
13 here, 12, 13, 15, 16 and when we get here, all 21 are
14 there.
15 MEMBER WALLIS: How are we supposed to
16 review this, because I think we could spend all of the
17 day on Chapter 2, for instance, or on Chapter 4.
18 There is so much in all of these things.
19 MEMBER SIEBER: There is a more basic
20 problem, I think.
21 MEMBER WALLIS: How are we going to review
22 them?
23 CHAIRMAN APOSTOLAKIS: We're going to have
24 two, three meetings, whatever it takes.
25 MEMBER WALLIS: Are we going to dig into

1 the details or are we going to be at the sort of level
2 we're at today?
3 CHAIRMAN APOSTOLAKIS: No, today if you
4 wanted detail, you could ask for them.
5 MEMBER SIEBER: Well, if we go back to
6 basics, one of the problems that I had was doing the--
7 the little bit that was assigned to me was
8 efficiencies in design details in the DCD. I would
9 read through it and I wasn't able to discern from the
10 DCD exactly what you model in the PRA and how it got
11 that way.
12 And so if you're going to work on a time
13 line like this to come up with the next revision of
14 the PRA, there is going to have to be a lot of work
15 done in detailed design, I think, in order to make the
16 PRA a little more valid than it is right now. Right
17 now, there is some speculation in there as to what the
18 equivalent is.
19 And my question is are you prepared to do
20 additional detailed design work to support this and
21 also the selling of the plant and its certification or
22 whatever licensing that you're going to do in that
23 amount of time? It seems to me like a lot of work.
24 MR. WACHOWIAK: We do have for many of the
25 systems more detailed design than what was reported in

1 the DCD done. The DCD only contains a certain level
2 of information. It doesn't contain everything. We
3 need more information than what is in the DCD to do a
4 PRA.
5 MEMBER SIEBER: Yes, but for us to review
6 it at least with the documents we have, we can't do a
7 good job of reviewing them nor can the staff, I doubt.
8 MR. WACHOWIAK: So now, what the question
9 would be is in the PRA report how do we incorporate
10 whatever other level of detail that we have. So, for
11 example, in GDCS, I will throw that one out because I
12 know that that one, the design specification is
13 complete as far as we're concerned for this state. We
14 can build a model from that.
15 Would we take that complete design
16 specification document and submit that? That
17 typically has not ever been done from GE to submit the
18 specific design specifications.
19 CHAIRMAN APOSTOLAKIS: And this is because
20 if you submit it, it becomes part of the docket or
21 what is the problem?
22 MEMBER CORRADINI: I don't think they have
23 it.
24 CHAIRMAN APOSTOLAKIS: He says they are
25 there.

NEAL R. GROSS

1 MR. WACHOWIAK: That system --

2 CHAIRMAN APOSTOLAKIS: For this system

3 they are there.

4 MR. WACHOWIAK: That system we have more

5 than what is in the DCD, but we don't specifically

6 have what type of manufacturer of squib valve or

7 anything like that isn't there yet, but we do have

8 more information about how it's or about --

9 MEMBER SIEBER: About the range.

10 MR. WACHOWIAK: -- how it's operated, what

11 is the range, all those sorts of things that is beyond

12 what was determined to be the scope of the DCD. And

13 so this is what has always been hard for us to come to

14 grips with, and I think the staff also, is that the

15 DCD level of information isn't sufficient to build a

16 PRA model.

17 How do we transfer the information for the

18 PRA without saying -- without taking all of GE's

19 documents and sending them to the NRC? We have to

20 find a way to do that. The way that we attempted to

21 do that so far and since -- and because we have gotten

22 many questions, we have not yet succeeded in that, is

23 to take that additional design detail that we have and

24 describe it in the PRA document.

25 MEMBER SIEBER: So that's what I should

1 look for?

2 MR. WACHOWIAK: And so if there is

3 something that you need that's not in the DCD, you

4 would look in the PRA.

5 MEMBER SIEBER: Right.

6 MEMBER CORRADINI: In terms of design

7 detail necessary.

8 MR. WACHOWIAK: Necessary to support. And

9 what we are looking at is of the design detail that's

10 done at this point, does that support our position in

11 the PRA? In some cases, the answer is no. We just

12 hadn't decided that level of detail yet, because it's

13 something that would be done in a later stage of

14 design. And so we then have a choice to make.

15 Do we just model it in a bounding manner

16 that we can -- that anything can be supported or do we

17 say, no, we need it to be this way and we provide the

18 designers with the design requirement that says when

19 you add these details later, you will add that.

20 That's a requirement that you have to meet.

21 And we have done a combination of those

22 two things. There is some areas where we have said,

23 where we talk about RTNSS. Tomorrow, we have

24 specified from the PRA, we have specified to the FAPCS

25 engineer that he needs to add a parallel path to the

1 suction from the suppression pool to the FAPCS pumps
2 for the LPSI function. It was a single path before.
3 We are making a design requirement that it's a double
4 path.
5 CHAIRMAN APOSTOLAKIS: Okay. I'm a little
6 confused by the administrative part of all this. And
7 the reason why I'm not interested in this really is
8 because, as you are aware, of the last three full
9 committees debated the issue of whether the PRA should
10 be part of the COL and if it is, how much? I mean,
11 when it is updated should it be submitted and so on.
12 There are apparently some legal grounds that if you
13 submit something to the Agency's part of the public
14 record, is that what is driving then this discussion?
15 I mean, why put the detail in the DCD
16 rather than the PRA, for example? Is that a legal
17 thing or is it just convenience? Is it the date
18 sequence?
19 MEMBER CORRADINI: If you had it, would
20 you put it there? I mean, let's take this question
21 and reverse it. If you had it, would you have put it
22 in the DCD at the time?
23 MR. WACHOWIAK: No.
24 MEMBER CORRADINI: Okay.
25 CHAIRMAN APOSTOLAKIS: Why not? Because

1 that's what I' asking at this time.

2 MEMBER SIEBER: It was probably documented

3 in the PRA.

4 MR. WACHOWIAK: Well, it's not just that.

5 What goes in the DCD --

6 CHAIRMAN APOSTOLAKIS: It's controlled.

7 It's a control document.

8 VICE CHAIRMAN SHACK: Let him answer the

9 question.

10 MR. WACHOWIAK: What does in the DCD for

11 the line description eventually is put into an FSAR.

12 And we all know or at least all of us that have done

13 PRAs for existing plants, the information in the FSAR

14 is not sufficient to do a PRA. So the design

15 description that goes in the DCD should be the same

16 level of description as an FSAR and nothing more. We

17 need more than that to do the PRA.

18 CHAIRMAN APOSTOLAKIS: But again, why not

19 put it in it? What's wrong with that? Is it just an

20 issue?

21 MR. WACHOWIAK: The FSAR then contains all

22 sorts of controls about how it can be changed.

23 CHAIRMAN APOSTOLAKIS: That's the issue.

24 That's a bigger issue.

25 MR. WACHOWIAK: We write, we try to write

1 things in the FSAR. The things that are there, we
2 really don't expect them to change.
3 CHAIRMAN APOSTOLAKIS: Okay. Now, you've
4 answered my question.
5 MR. WACHOWIAK: So now the design detail
6 that we need and those things that aren't expected to
7 change, are the things that are necessary to
8 demonstrate the design basis.
9 MEMBER SIEBER: Safety requirements.
10 MR. WACHOWIAK: Yes, the design from the
11 deterministic traditional viewpoint for those
12 analyses. That information is there and if you want
13 to change that information, that would be -- that goes
14 through this process when you have to do these things,
15 but you don't ever expect that information to change.
16 When we do the PRA --
17 CHAIRMAN APOSTOLAKIS: When you do the
18 PRA, continue.
19 MR. WACHOWIAK: When we do the PRA, we're
20 not looking at -- we're not only looking at how the
21 equipment is supposed to perform. You can say it's
22 supposed to do this and then when you go -- you go and
23 you build it to do that. Well, the PRA also looks at
24 what happens if things don't do what the safety
25 analysis said. Then what's the likelihood that you

1 are going to get into a core damage accident?

2 Some of those things aren't specified.

3 You know, you don't say how everything is going to

4 work under all conditions. You only say how it is

5 going to work under the conditions that it was

6 analyzed for.

7 CHAIRMAN APOSTOLAKIS: That's right.

8 MR. WACHOWIAK: We then have to go look at

9 how things are going to perform in conditions that may

10 not be so much like what was originally specified for

11 the equipment.

12 CHAIRMAN APOSTOLAKIS: So you are not

13 under no legal obligation to update the PRA and submit

14 it to the NRC?

15 MEMBER CORRADINI: No, I thought he just

16 said --

17 MR. WACHOWIAK: That's right.

18 MEMBER CORRADINI: -- can I just?

19 CHAIRMAN APOSTOLAKIS: Yes.

20 MEMBER CORRADINI: Because I thought he

21 just said there are no legal obligations of the FSAR

22 and if there are, it's a task.

23 CHAIRMAN APOSTOLAKIS: The FSAR is

24 supposed to be --

25 MEMBER SIEBER: Licensees have to update.

1 CHAIRMAN APOSTOLAKIS: Yes.

2 MEMBER CORRADINI: Yes.

3 CHAIRMAN APOSTOLAKIS: That's the

4 difference.

5 MEMBER SIEBER: Okay. On the other hand,

6 you aren't allowed to change your plan as it's

7 described in the FSAR without telling members.

8 CHAIRMAN APOSTOLAKIS: Right.

9 MR. WACHOWIAK: Right.

10 MEMBER SIEBER: That's where the problem

11 is.

12 CHAIRMAN APOSTOLAKIS: Okay. So the PRA

13 is not under such legal constraints.

14 VICE CHAIRMAN SHACK: The FSAR is not a

15 design document at all. In fact, what is it is a

16 safety document. The FSAR, try to understand, say

17 that you have a BWR with three water pumps and you

18 want to know they are 100 percent capacity or 50

19 percent capacity.

20 MEMBER CORRADINI: They won't tell you.

21 MEMBER BONACA: They won't tell you. The

22 FSAR won't tell you that. The only way you refer it,

23 you go to a loss of feedwater and you look at what

24 they say regarding the accident surrounding it. They

25 say the LOCA was 120 seconds for one pump or two

1 pumps. It tells me --

2 MEMBER CORRADINI: It just tells you not

3 to show the same cases made.

4 MEMBER BONACA: But that's maybe a fashion

5 doesn't give you success criteria for the PRA. So the

6 PRA -- so in the PRA, however, we want to know by

7 testament how much decayed heat you remove at 1.1.

8 There is different information.

9 CHAIRMAN APOSTOLAKIS: Okay. So the PRA

10 that we have now, that we have reviewed or we are in

11 the process of reviewing, that's a document that is

12 what? I mean, what's the legal status of that

13 document? You don't have to keep it up to date,

14 right?

15 MEMBER SIEBER: No.

16 CHAIRMAN APOSTOLAKIS: It has no legal

17 status even though it has been submitted to the NRC?

18 MEMBER CORRADINI: No.

19 VICE CHAIRMAN SHACK: There is no

20 regulation that says other than Part 52.

21 MEMBER CORRADINI: Okay.

22 CHAIRMAN APOSTOLAKIS: So what part

23 produce this? Part 52 we don't know what it's going

24 to say.

25 MR. WACHOWIAK: But the current Part 52,

1 not the revision, the current version says we submit
2 it.
3 CHAIRMAN APOSTOLAKIS: Okay. And what
4 does that mean? That you also have to update it?
5 MR. WACHOWIAK: No. It just says we have
6 to submit it.
7 CHAIRMAN APOSTOLAKIS: You submit it once?
8 MR. WACHOWIAK: Once.
9 CHAIRMAN APOSTOLAKIS: At which time? Now
10 or --
11 MR. WACHOWIAK: In certification.
12 CHAIRMAN APOSTOLAKIS: -- 2007?
13 MEMBER SIEBER: Design certification.
14 CHAIRMAN APOSTOLAKIS: Certification.
15 Just before you get this out.
16 MR. WACHOWIAK: So now, what the plan for
17 the design certification is is that we know that there
18 is going to be certain open items in the SER for ESBWR
19 at this point. There is some things that just can't
20 be closed on the time line that we have. Some things
21 will be left open. Many of the things that are going
22 to be left open are going to be associated with the
23 review of the PRA.
24 So as time goes up past here, we're going
25 to try to close most of those things up here, but as

1 time goes on, we'll be closing all of those until I
2 believe in 2010 or 2009. There is the final
3 certification with no more open items. And that's
4 when we will be done submitting PRAs and you will be
5 done reviewing PRAs and everything will be up to the
6 COLA applicants and holders to do what they want with
7 PRA.
8 CHAIRMAN APOSTOLAKIS: Very good. So that
9 is consistent.
10 MEMBER WALLIS: So when do we make the
11 hard input into this in the form of a letter or
12 something? Do we wait a year?
13 CHAIRMAN APOSTOLAKIS: We can write
14 internal letters whenever we please.
15 MEMBER SIEBER: I was writing one.
16 CHAIRMAN APOSTOLAKIS: If you believe that
17 there is an important issue now you want to raise?
18 MEMBER WALLIS: This seems to be a state
19 of flux now, it's so hard to know what to do.
20 CHAIRMAN APOSTOLAKIS: Well, no, no. If
21 we convince ourselves --
22 MEMBER BONACA: I think what I would
23 suggest is that at this point we begin to fit some
24 expectation of what we would like to review. I mean,
25 I think that, you know, our intent shouldn't be the

one reviewing every single cutset there is out there in the PRA. We can do that and that's not the point anyway.

CHAIRMAN APOSTOLAKIS: Yes.

MEMBER BONACA: But maybe to select a number of specific issues, especially the one we're discussing there about the passive system squib, for example, that's a fundamental issue. I mean, you know, because that's what's going to make the difference in these plants and the previous plants.

CHAIRMAN APOSTOLAKIS: The Committee is free to write as many letters as it wants.

MEMBER BONACA: Yes.

CHAIRMAN APOSTOLAKIS: There will be a final letter on the whole design that will tell the commission approve or not approve. Now, if we don't feel that we have significant interest of the PRA, we can wait until that time and say have it there and we reviewed the PRA was okay. If there are significant issues before then, the Committee is free to have a full Committee meeting and write the letter.

MEMBER BONACA: Okay. That's fine at this time.

MEMBER WALLIS: We can think of examples of all these things which I have read here, I

1 dismissed on the sort of qualitative basis. There's
2 a discussion at the end of the paragraph that says we
3 don't think this is significant, so it's not modeled
4 in the PRA. Well, I have no real basis for knowing
5 whether or not that is a reasonable decision. I have
6 a lot of trouble with those kinds of paragraphs.
7 MEMBER BONACA: Those are, in fact --
8 MEMBER WALLIS: They are all over the
9 place.
10 MEMBER BONACA: -- here to read, but we
11 should verify.
12 MEMBER WALLIS: But we can't verify.
13 MEMBER BONACA: Well, no, you can in some
14 cases. I found for -- the same thing in the shutdown
15 PRA I was reviewing. In many places this says it is
16 assumed that one part would be in -- what it assumes
17 is that it is being used many times. But then we'll
18 go back and look at what is assumed, that in order to
19 have that be true, you have to have two or three
20 independent failures, okay. So that gave me
21 sufficient comfort and, you know, the other cases, I
22 don't know what the answer is and we have to review
23 it. So some of that will have to be done in detail.
24 CHAIRMAN APOSTOLAKIS: Well, the issue, I
25 believe, is what Graham just raised. Is this

1 important enough for us to write a letter on it or at
2 this stage we give this feedback to Rick and his
3 colleagues and then we see how it is resolved in the
4 future.
5 MEMBER SIEBER: Right.
6 CHAIRMAN APOSTOLAKIS: So that seems to be
7 the decision.
8 MR. WACHOWIAK: If we took, for example,
9 some of the things, and I think where you may have
10 seen some of the things that we had qualitatively
11 discounted was in Section 2 on the initiating events.
12 Okay. We have heard that comment from you and from
13 the staff and as part of this update process, we have
14 people assigned to go back and review all of those
15 things and provide either further justification or
16 just modeling, you know. There is different ways of
17 handling it.
18 So we take that feedback and we can
19 incorporate that in at this time. It gets more -- as
20 time goes out, it gets more and more difficult to
21 incorporate different things.
22 MEMBER WALLIS: Well, I'll tell you
23 another thing which is qualitative and this is Chapter
24 20, Adverse System Interaction. There is a lot of
25 discussion about that, but the conclusions seem to be

1 just sort of vaguely justified. And I didn't --
2 wasn't very convinced, so how do I get more convinced?
3 MR. WACHOWIAK: On adverse system
4 interactions?
5 MEMBER WALLIS: Yes, let's just talk about
6 an example.
7 MR. WACHOWIAK: Well, I had a discussion
8 of that in the RTNSS presentation, but it's probably
9 not going to satisfy you.
10 MEMBER WALLIS: Well, I don't know what
11 you have.
12 MR. WACHOWIAK: But the reason is that
13 adverse system interactions are there -- are not there
14 because of the fundamental way of how you design the
15 plant. That comes from the details of how you
16 implement the design of the plant.
17 MEMBER WALLIS: Yes, yes.
18 MR. WACHOWIAK: And until we see the
19 details of how all of these different requirements are
20 implemented, we're still not sure if we're going to
21 even have any system interaction in this.
22 MEMBER WALLIS: Yes, okay.
23 MR. WACHOWIAK: And what I think is that
24 as we incorporate the details and find these things,
25 we can design so that we don't have any identified

1 adverse system interactions.

2 MEMBER WALLIS: Do we have to have faith

3 that that will happen?

4 CHAIRMAN APOSTOLAKIS: No, no, the next

5 question is then in this time line of the second one,

6 the middle one, where would we get informed?

7 MR. WACHOWIAK: On the --

8 CHAIRMAN APOSTOLAKIS: In terms of

9 subcommittee meetings. We certainly have to have one

10 of the Level 2 work in the next, I don't know, we'll

11 discuss this tomorrow, month or two months. But then

12 do you see the Committee meeting again at some other

13 times there as you progress, you finally reach the

14 final letter?

15 MR. WACHOWIAK: I could see that. And if

16 we want to do that that way, yes. And when I'm --

17 like I said, we are currently rebaselining the

18 schedule to ensure that we meet not only these

19 milestones but there are other milestones in the

20 project that all have to be met and it's an integrated

21 schedule for everything. When I have that completed,

22 that scheduling task is supposed to be completed by

23 next Friday, that's when the customers want it from

24 us, then I will be able to let you know what dates we

25 will have what done.

1 CHAIRMAN APOSTOLAKIS: Okay.

2 MR. WACHOWIAK: And then we can schedule

3 the meetings around that.

4 CHAIRMAN APOSTOLAKIS: Right. So well

5 anyway, the meeting, the subcommittee meeting on the

6 Level 2 has to be done in the next month or something.

7 MR. WACHOWIAK: Okay.

8 CHAIRMAN APOSTOLAKIS: But then somebody

9 there before the full revision, the question is when

10 will you be ready to have a subcommittee meeting, so

11 that it will be sufficient time for you, if there are

12 some issues that are raised to respond to before

13 October of '07? Sometime in June, July?

14 MR. WACHOWIAK: Yes, I'm thinking probably

15 in late June, early July.

16 CHAIRMAN APOSTOLAKIS: Okay.

17 MR. WACHOWIAK: Probably will be okay,

18 because we have changed our process for how we are --

19 CHAIRMAN APOSTOLAKIS: Okay.

20 MR. WACHOWIAK: -- doing this.

21 CHAIRMAN APOSTOLAKIS: It sounds good.

22 MR. WACHOWIAK: The process that we used

23 before we were stuck. If we sent a Chapter 2 Rev 1 in

24 and then we later found something that we would have

25 liked to have done differently in that to address a

1 certain problem, maybe say in Chapter 11 or something
2 like that, because of the document control process
3 that we used at GE, we were stuck. We couldn't make
4 that change. We have initiated a different process
5 that will allow us to incorporate those things.
6 CHAIRMAN APOSTOLAKIS: Okay.
7 MR. WACHOWIAK: So even if you find
8 something in the stuff back here, in early July you
9 tell us that it needs done differently.
10 CHAIRMAN APOSTOLAKIS: Okay.
11 MR. WACHOWIAK: We can fix that.
12 CHAIRMAN APOSTOLAKIS: So we will.
13 MEMBER BONACA: You are doing the
14 analysis. You must interact with the designers?
15 MR. WACHOWIAK: Yes.
16 MEMBER BONACA: And so I think to any
17 proposal you make, you will never -- you will not
18 always get a yes. In some cases you never will,
19 right? I'm trying to understand, you know, when do
20 you think that the time is such that your feedback is
21 being taken, has been accepted and the design is
22 reasonably firmed up? I mean, that would be an
23 important point for us, I mean, to understand, you
24 know, what you are proposing or what you are
25 describing to us is being endorsed by the design team.

1 MR. WACHOWIAK: I don't think there is --
2 there is nothing that I presented today that hasn't
3 been endorsed by the design team.
4 MEMBER BONACA: And you are not concerned
5 that something may be getting in your way?
6 MR. WACHOWIAK: I am concerned.
7 MEMBER BONACA: You are?
8 MR. WACHOWIAK: I am concerned and that's
9 why at GE our design control process includes PRA just
10 like any other discipline on any design changes.
11 MEMBER BONACA: Right.
12 MR. WACHOWIAK: I'm always concerned that
13 when people are making changes and doing things to
14 their systems that some thing that we had decided
15 early on might -- somebody might think is a place
16 where they can do some cost reduction or some place
17 where they can do some simplification.
18 MEMBER BONACA: Is there a day sometime in
19 2007 where you believe that you probably will have to
20 stop, I mean, or attempt to for that?
21 MR. WACHOWIAK: Well, if we remember back
22 from my earlier thing that the design continues to
23 evolve. From my earlier slide, the design is going to
24 continue to evolve all the way into and through
25 construction, because there are some pieces, some

1 details in the design that aren't going to be
2 specified up front and some of those things make a
3 difference in the PRA.
4 MEMBER BONACA: Sure.
5 MR. WACHOWIAK: Now, that said, for the
6 design or for the detail of the PRA that is needed for
7 a DCD or for a COL application, we have to come to
8 some kind of agreement that this is the level of
9 detail that we're going to have and everything in
10 there is either bounded or covered by a design
11 requirement that can be checked later. If you really
12 need to have that, like for example, we did a seismic
13 margins analysis to address seismic.
14 It doesn't give us any PRA numbers. But
15 we said that if we do this analysis and we have a
16 certain amount of margin, nearly everyone is confident
17 that when you do run the numbers, you will get
18 something that is acceptable. So the values that
19 would be -- typically, you would go out and determine
20 from a built system the high competence, low
21 probability of failure numbers. We set a requirement
22 for those that said they had to be at a certain level.
23 Those I know I've written in tier 2 and I
24 think they were -- they are going into tier 1, so that
25 would be -- those would be tier 1 items that says

1 okay, you will go and you will check these systems to
2 make sure you have this much seismic margin. That way
3 you guys have a confidence now to know that when this
4 PRA is actually done by the site, you will get the
5 kind of answers that you would expect and it's not
6 going to be submitted at that time. It's just you
7 know that is going to be there.
8 MEMBER BONACA: You show these with that
9 graph that we are really already into the detail
10 design.
11 MR. WACHOWIAK: Some systems have started
12 the detail design. Others haven't.
13 MEMBER SIEBER: Right.
14 MEMBER WALLIS: Well, we talked about our
15 review of this, how about the staff review? Is the
16 staff sending you RAIs now?
17 MR. WACHOWIAK: Yes. Well, I don't know
18 if they are right now.
19 MEMBER WALLIS: We're going to hear about
20 that tomorrow?
21 MEMBER CORRADINI: Yes.
22 MR. WACHOWIAK: Yes, we'll hear it
23 tomorrow. I think we have gotten about --
24 CHAIRMAN APOSTOLAKIS: For starters, the
25 presentation tomorrow?

MR. WACHOWIAK: Yes. You have 157 on the PRA.

CHAIRMAN APOSTOLAKIS: So what I get from this is that we will have two meetings at least until October, right? Okay. All right.

MEMBER WALLIS: And it's awful late.

MR. WACHOWIAK: The last point I wanted to make with this slide is we have made a commitment to the staff that after this round with the PRA and we go into DCD Rev 4 where we are closing open items that we are not going to start to be doing staggered things anymore. We have to adjust these schedules to allow the PRA time to catch up with the things that can change in the DCD before we commit to the next DCD delivery.

CHAIRMAN APOSTOLAKIS: Okay, so we have --

MR. WACHOWIAK: This should be the last time where we do this staggered business.

CHAIRMAN APOSTOLAKIS: Okay. So it is a good time to stop.

MR. WACHOWIAK: Yes.

CHAIRMAN APOSTOLAKIS: Thank you very much. We'll see you tomorrow at 8:30.

(Whereupon, the meeting was concluded at 5:58 p.m.)

CERTIFICATE

This is to certify that the attached proceedings before the United States Nuclear Regulatory Commission in the matter of:

Name of Proceeding: Advisory Committee on Reactor Safeguards Subcommittee Meeting

Docket Number: n/a

Location: Rockville, MD

were held as herein appears, and that this is the original transcript thereof for the file of the United States Nuclear Regulatory Commission taken by me and, thereafter reduced to typewriting by me or under the direction of the court reporting company, and that the transcript is a true and accurate record of the foregoing proceedings.

Christina Warner
Official Reporter
Neal R. Gross & Co., Inc.

Advisory Committee on Reactor Safeguards
Reliability & Probabilistic Risk Assessment Subcommittee Meeting
Rockville, MD
14-15 December 2006

- Proposed Agenda -
Revision 12/01/06
Cognizant Staff Engineer: Eric Thornsbury (301-415-8716, eat2@nrc.gov)

	Topic	Presenter(s)	Time
	December 14		
	Opening Remarks and Objectives	G. Apostolakis, ACRS	8:30 - 8:40 am
I	Overview of ESBWR PRA	R. Wachowiak, GE	8:40 - 10:00 am
	Break		10:00 - 10:15 am
II	Significant Changes in Revisions 1 and 2	R. Wachowiak, GE	10:15 am - 12:00 noon
	Lunch		12:00 noon - 3:00 pm
III	Discussion of Issues Raised During Previous ACRS Meeting	R. Wachowiak, GE	3:00 - 6:00 pm
	Recess for the day		6:00 pm

	Topic	Presenter(s)	Time
	December 15		
	Reconvene		8:30 am
III	Completion of ESBWR Presentations	R. Wachowiak, GE	8:30 - 10:15 am
	Break		10:15 - 10:30 am
IV	Key Issues in Staff RAIs	T. Kevern, NRR/NRO N. Saltos, NRR/NRO M. Pohida, NRR/NRO R. Palla, NRR/NRO	10:30 - 11:30 am
	Closing Discussions	G. Apostolakis, ACRS	11:30 am - 12:00 noon
	Adjourn		12:00 pm

Notes:
- Presentation time should not exceed 50% of the total time allocated for a specific item.
- Number of copies of presentation materials to be provided to the ACRS - 35.

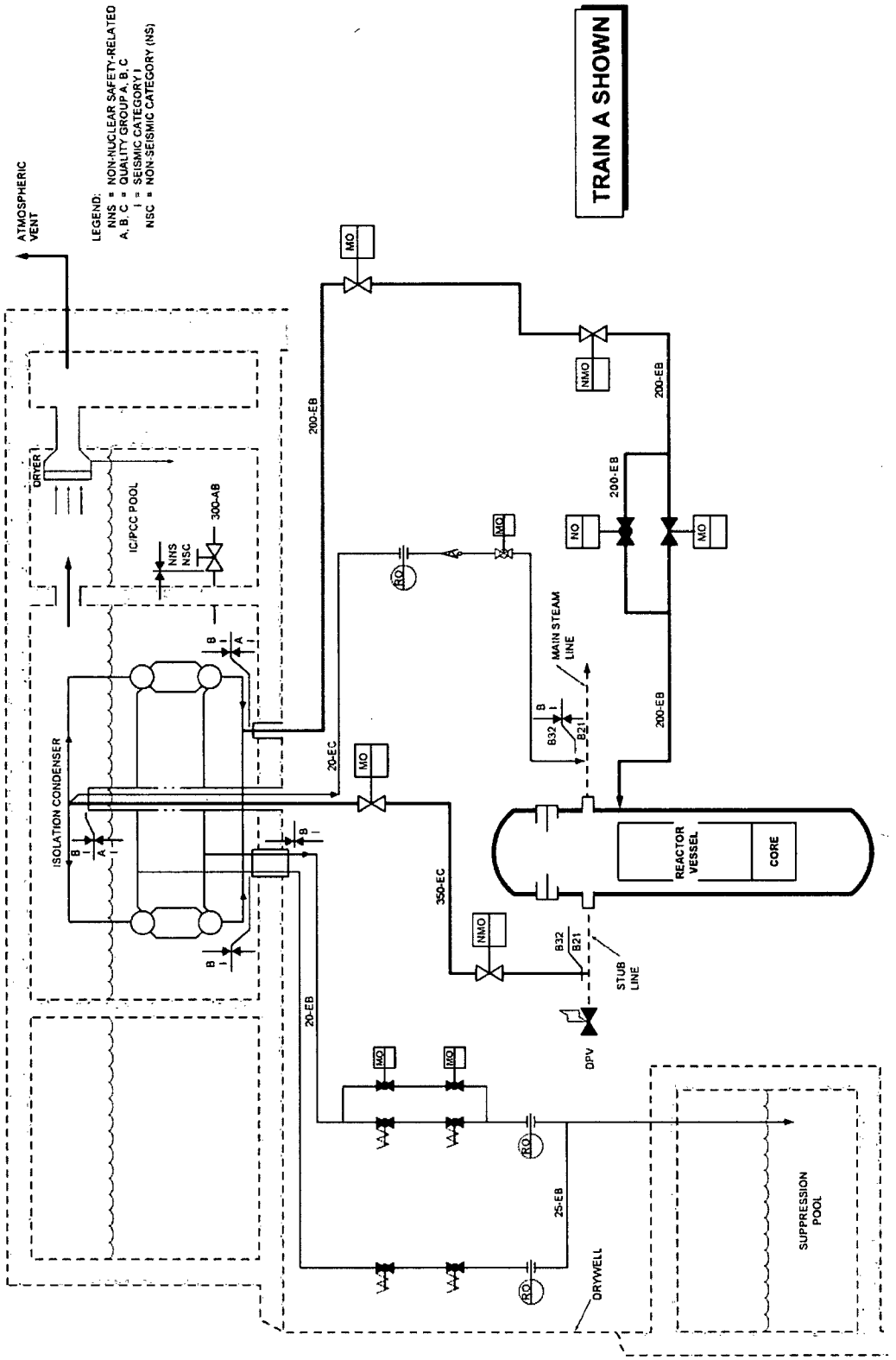

Figure 5.1-3. Isolation Condenser System Schematic

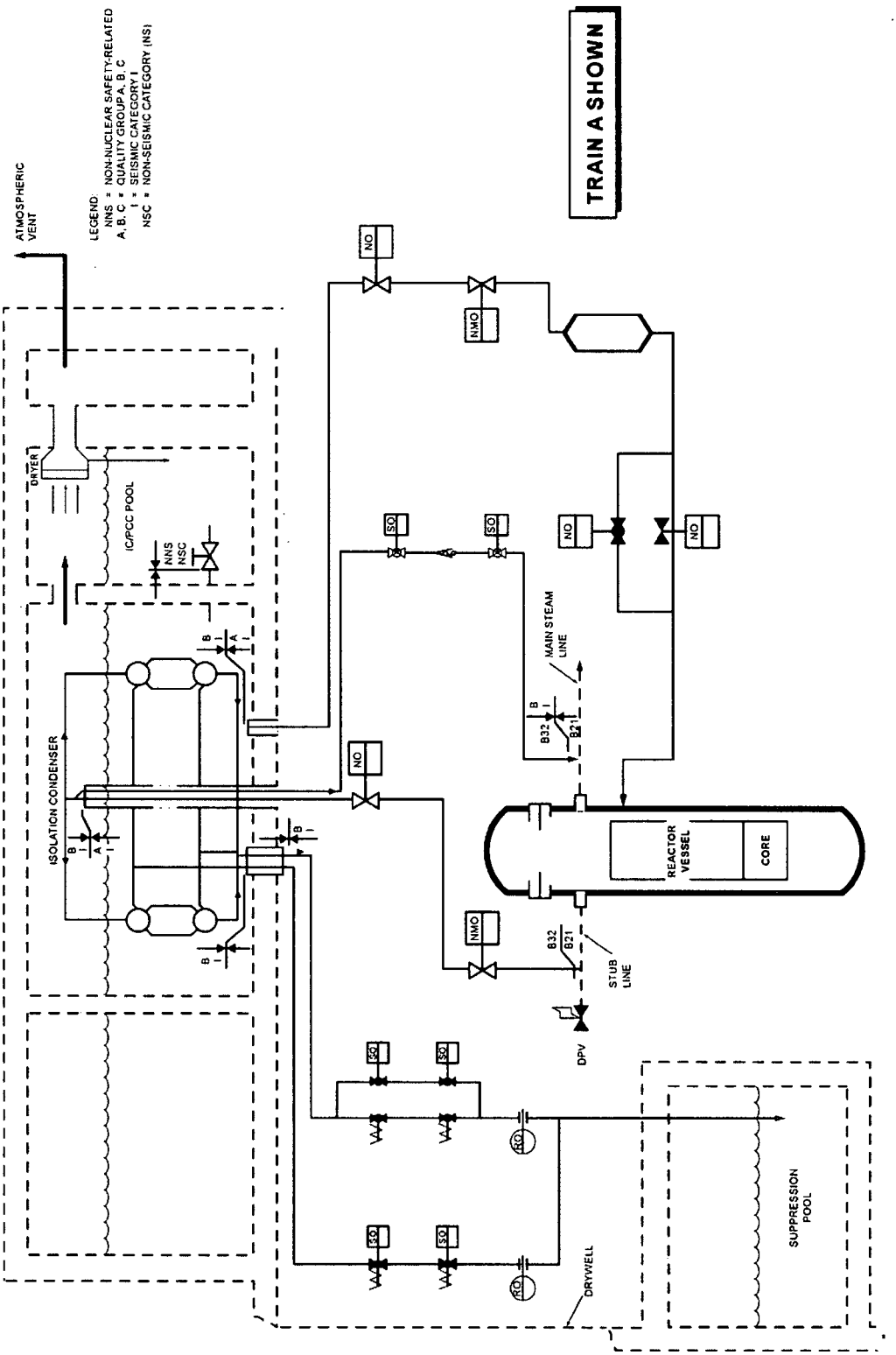

Figure 5.1-3. Isolation Condenser System Schematic

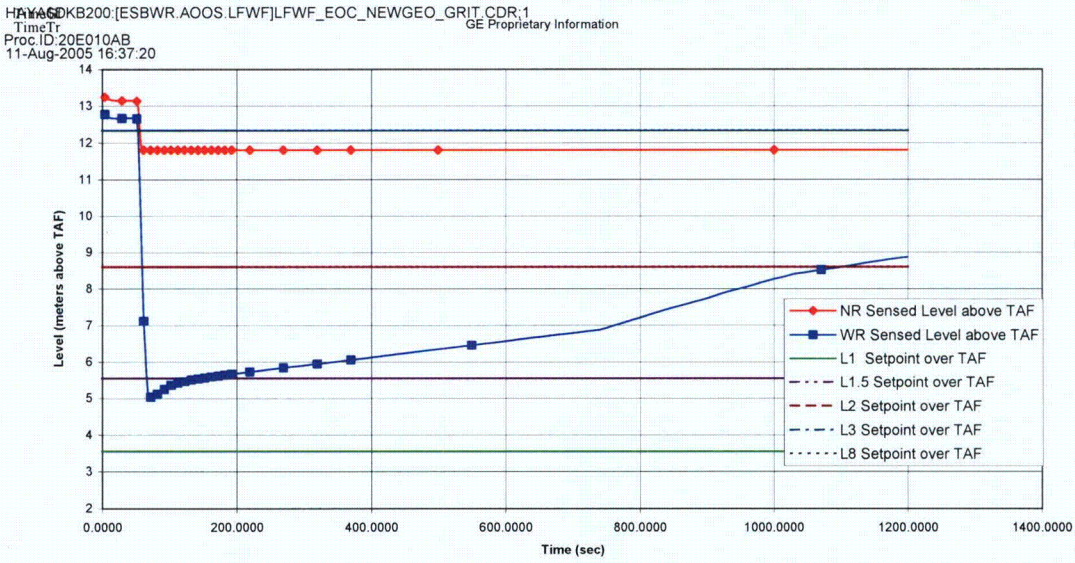

Figure 15.2-16c. Loss of All Feedwater Flow

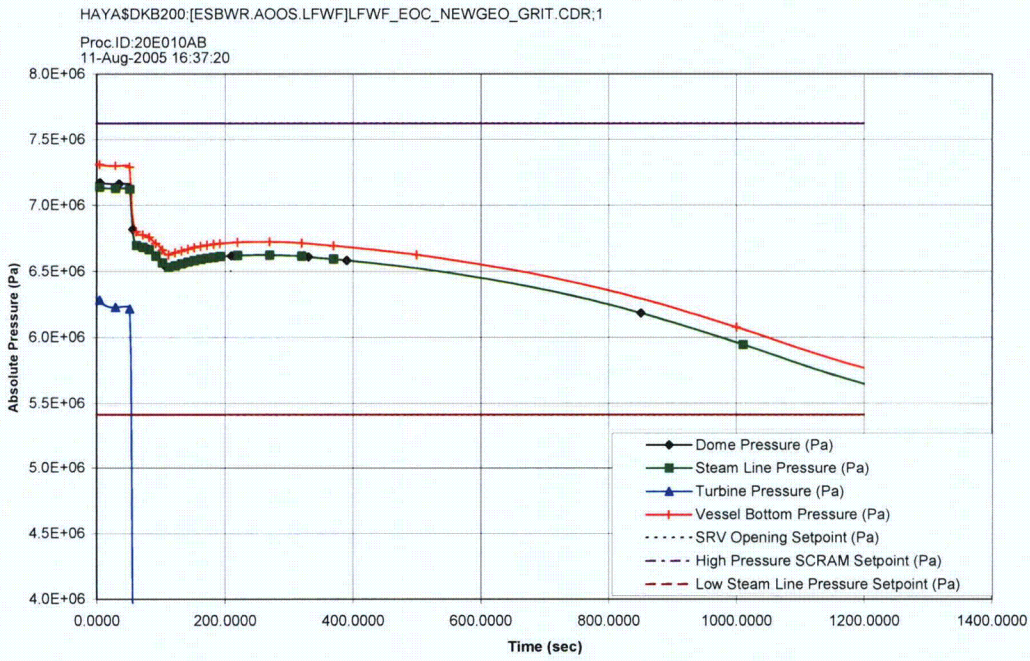

Figure 15.2-16d. Loss of All Feedwater Flow

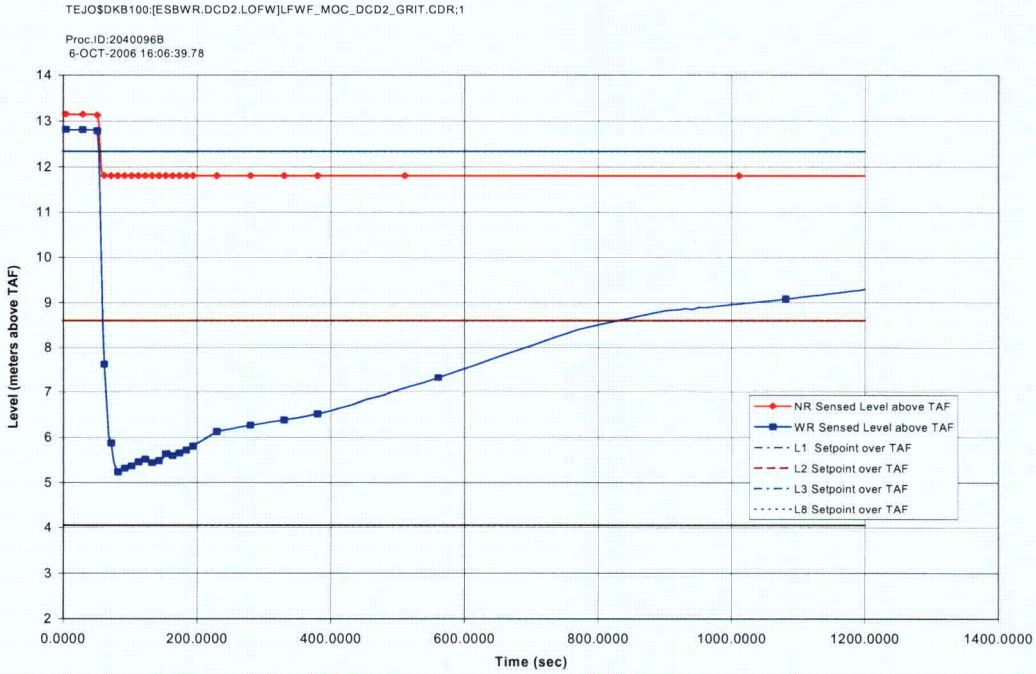

Figure 15.2-16c. Loss of All Feedwater Flow

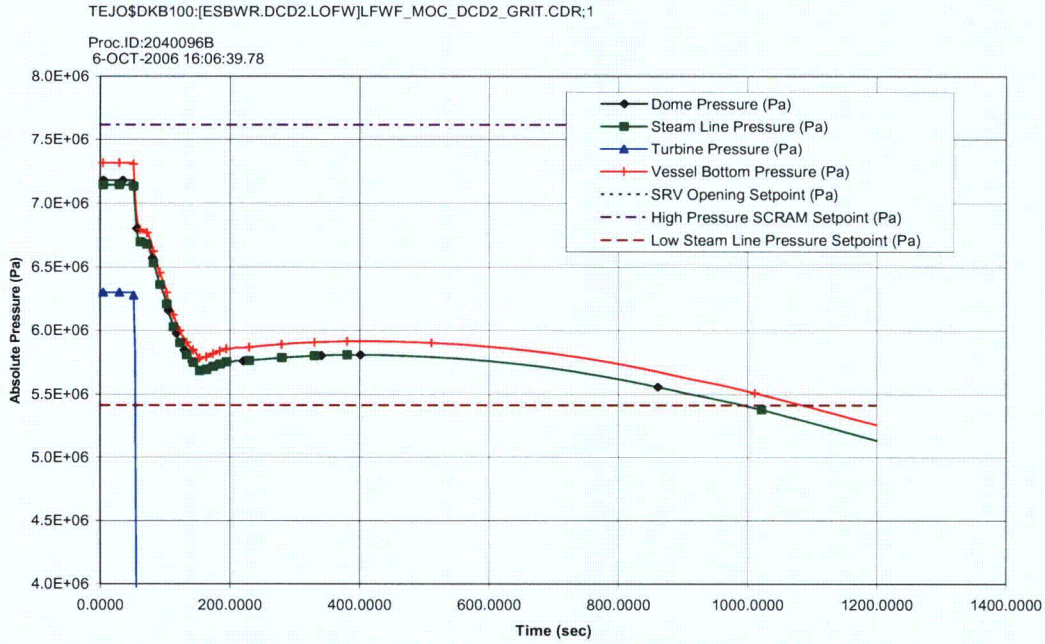

Figure 15.2-16d. Loss of All Feedwater Flow

Table 7.2-5

Top Ten Level 1 Accident Sequences

Sequence	T-LOPP044 - Sequence No. 1	
CDF		1.63E-08
% of Class I CDF		57.07%
% of total CDF		55.91%
Initiating event	Loss of Preferred Power	

Scram is successful
Initial water drop causes level to go below L1.5
2 CRD Pumps fail to restore water before 15 minute timer expires, or the injection valves of more than 1 ICS train fail to open
ADS is successful
Depressurization causes ICS to be ineffective
Injection systems fail

Vessel fails at low pressure
Lower drywell water level is LOW

Table 7.2-5

Top Ten Level 1 Accident Sequences

Sequence	T-FDW044 – Sequence No. 2	
CDF		1.20E-08
% of Class I CDF		41.90%
% of total CDF		41.04%
Initiating event	Loss of Feedwater	

Scram is successful
Initial water drop causes level to go below L1.5
2 CRD Pumps fail to restore water before 15 minute timer expires, or the injection valves of more than 1 ICS train fail to open
ADS is successful
Depressurization causes ICS to be ineffective
Injection systems fail

Vessel fails at low pressure
Lower drywell water level is LOW

Table 7.2-5

Top Ten Level 1 Accident Sequences

Sequence	T-LOPP049 – Sequence No. 3
CDF	3.19E-10
% of Class III CDF	77.64%
% of total CDF	1.09%
Initiating event	Loss of Preferred Power

Scram is successful
Initial water drop causes level to go below L1.5
Failure to recover power within 15 minutes
2 CRD Pumps fail to restore water before 15 minute timer expires, or the injection valves of more than 1 ICS train fail to open
Depressurization fails
IC fails
SRVs prevent vessel overpressurization
CRD Pumps fails to provide injection
Operators fail to manually depressurize the plant

Vessel fails at high pressure

Table 7.2-5

Top Ten Level 1 Accident Sequences

Sequence	ML-L-014 – Sequence No. 4	
CDF		2.23E-10
% of Class I CDF		0.78%
% of total CDF		0.76%
Initiating event	Medium Liquid LOCA	

Scram is Successful
Vacuum breakers seat successfully
Feedwater fails to inject at high pressure
Fire Protection Systém Fails to Inject
ADS is successful
GDCS or equalizing lines fail to inject

FAPCS cannot provide long term injection because of insufficient water in suppression pool
CRD is not asked in this event tree. Inadequate water supply.
Lower drywell water level is HIGH

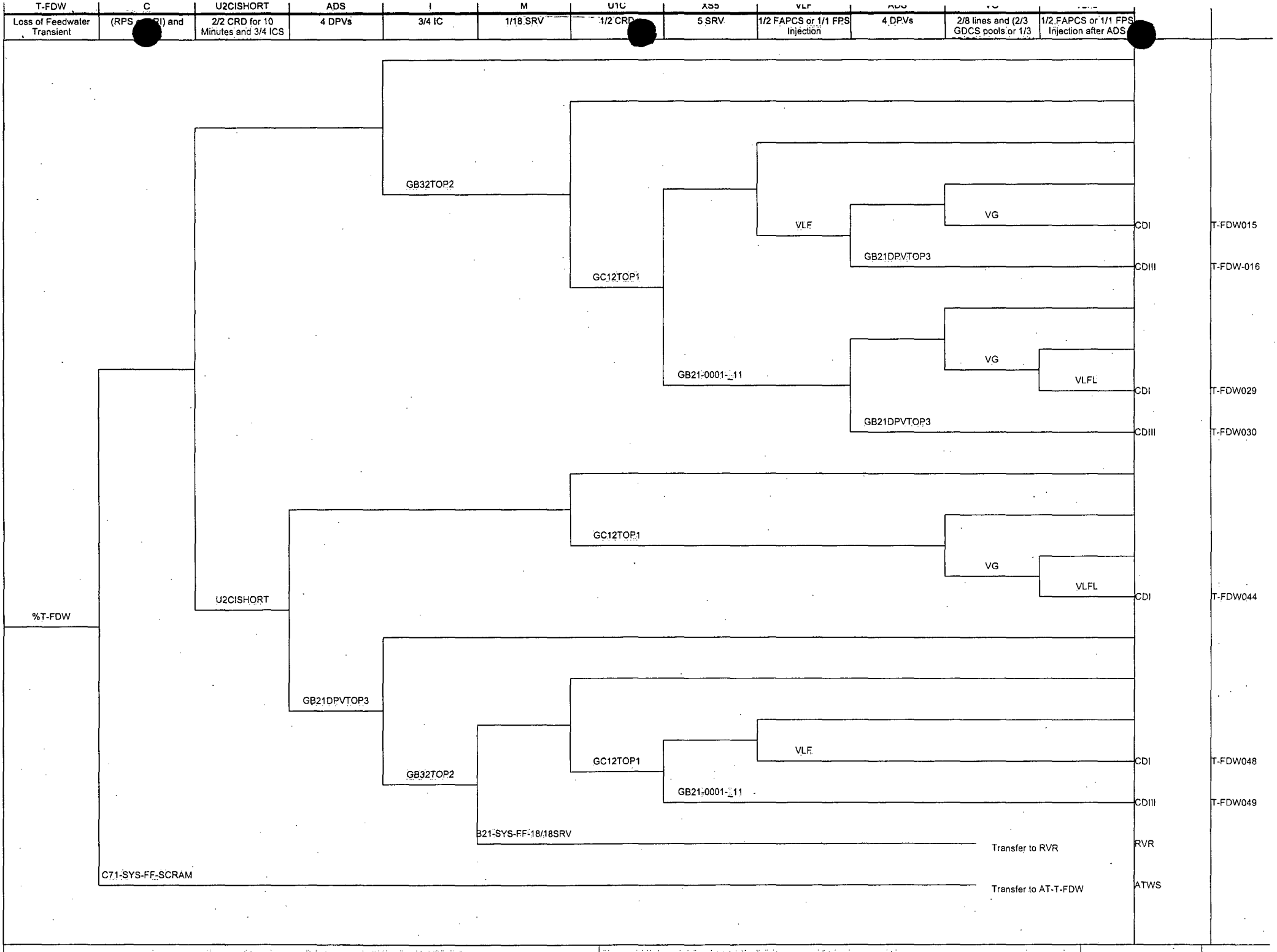
T-FDW
Loss of Feedwater Transient
C
(RPS [redacted]RI) and
U2CISHORT
2/2 CRD for 10 Minutes and 3/4 ICS
ADS
4 DPVs
I
3/4 IC
M
1/18 SRV
U1C
1/2 CRD [redacted]
XSS
5 SRV
VLF
1/2 FAPCS or 1/1 FPS Injection
ADS
4 DPVs
2/8 lines and (2/3 GDCS pools or 1/3
1/2 FAPCS or 1/1 FPS Injection after ADS [redacted]
%T-FDW
GB32TOP2
GC12TOP1
VLF
VG
GB21DPVTOP3
CDI
CDIII
T-FDW015
T-FDW-016
GB21-0001-11
VG
VLFL
CDI
GB21DPVTOP3
CDIII
T-FDW029
T-FDW030
U2CISHORT
GC12TOP1
VG
VLFL
CDI
T-FDW044
GB21DPVTOP3
GB32TOP2
GC12TOP1
VLF
CDI
T-FDW048
GB21-0001-11
CDIII
T-FDW049
B21-SYS-FF-18/18SRV
Transfer to RVR
RVR
C71-SYS-FF-SCRAM
Transfer to AT-T-FDW
ATWS

Table 7.2-7

Sequence 1 - Loss of Preferred Power Transient (T-LOPP044)

#	Cutset Probability	Event Probability	Event Name	Event Description
1	2.56E-10	4.60E-02	%T-LOPP	LOSS OF PREFERRED POWER TRANSIENT
		4.80E-02	C12-XHE-MH-F013A	MISPOSITION OF VALVE F013A
		4.80E-02	C12-XHE-MH-F013B	MISPOSITION OF VALVE F013B
		1.50E-05	E50-SQV-CF-GDCS7OPEN	CCF OF 7 SQUIB VALVES IN GDCS LINES TO OPEN
		1.61E-01	XXX-XHE-FO-LPMAKEUP	OP. FAILS TO RECOG. NEED FOR LOW PRESS. MAKEUP (LOCA)
2	2.56E-10	4.60E-02	%T-LOPP	LOSS OF PREFERRED POWER TRANSIENT
		4.80E-02	C12-XHE-MH-F013A	MISPOSITION OF VALVE F013A
		4.80E-02	C12-XHE-MH-F013B	MISPOSITION OF VALVE F013B
		1.50E-05	E50-SQV-CF-OPENALL	CCF OF ALL SQUIB VALVES TO OPEN
		1.61E-01	XXX-XHE-FO-LPMAKEUP	OP. FAILS TO RECOG. NEED FOR LOW PRESS. MAKEUP (LOCA)
3	2.56E-10	4.60E-02	%T-LOPP	LOSS OF PREFERRED POWER TRANSIENT
		4.80E-02	C12-XHE-MH-F013A	MISPOSITION OF VALVE F013A
		4.80E-02	C12-XHE-MH-F015B	MISPOSITION OF VALVE F015B
		1.50E-05	E50-SQV-CF-GDCS7OPEN	CCF OF 7 SQUIB VALVES IN GDCS LINES TO OPEN
		1.61E-01	XXX-XHE-FO-LPMAKEUP	OP. FAILS TO RECOG. NEED FOR LOW PRESS. MAKEUP (LOCA)
4	2.56E-10	4.60E-02	%T-LOPP	LOSS OF PREFERRED POWER TRANSIENT
		4.80E-02	C12-XHE-MH-F013A	MISPOSITION OF VALVE F013A
		4.80E-02	C12-XHE-MH-F015B	MISPOSITION OF VALVE F015B
		1.50E-05	E50-SQV-CF-OPENALL	CCF OF ALL SQUIB VALVES TO OPEN
		1.61E-01	XXX-XHE-FO-LPMAKEUP	OP. FAILS TO RECOG. NEED FOR LOW PRESS. MAKEUP (LOCA)
5	2.56E-10	4.60E-02	%T-LOPP	LOSS OF PREFERRED POWER TRANSIENT
		4.80E-02	C12-XHE-MH-F013B	MISPOSITION OF VALVE F013B
		4.80E-02	C12-XHE-MH-F015A	MISPOSITION OF VALVE F015A
		1.50E-05	E50-SQV-CF-GDCS7OPEN	CCF OF 7 SQUIB VALVES IN GDCS LINES TO OPEN
		1.61E-01	XXX-XHE-FO-LPMAKEUP	OP. FAILS TO RECOG. NEED FOR LOW PRESS. MAKEUP (LOCA)
6	2.56E-10	4.60E-02	%T-LOPP	LOSS OF PREFERRED POWER TRANSIENT
		4.80E-02	C12-XHE-MH-F013B	MISPOSITION OF VALVE F013B

Table 7.2-7

Sequence 1 - Loss of Preferred Power Transient (T-LOPP044)

#	Cutset Probability	Event Probability	Event Name	Event Description
		4.80E-02	C12-XHE-MH-F015A	MISPOSITION OF VALVE F015A
		1.50E-05	E50-SQV-CF-OPENALL	CCF OF ALL SQUIB VALVES TO OPEN
		1.61E-01	XXX-XHE-FO-LPMAKEUP	OP. FAILS TO RECOG. NEED FOR LOW PRESS. MAKEUP (LOCA)
7	2.56E-10	4.60E-02	%T-LOPP	LOSS OF PREFERRED POWER TRANSIENT
		4.80E-02	C12-XHE-MH-F015A	MISPOSITION OF VALVE F015A
		4.80E-02	C12-XHE-MH-F015B	MISPOSITION OF VALVE F015B
		1.50E-05	E50-SQV-CF-GDCS7OPEN	CCF OF 7 SQUIB VALVES IN GDCS LINES TO OPEN
		1.61E-01	XXX-XHE-FO-LPMAKEUP	OP. FAILS TO RECOG. NEED FOR LOW PRESS. MAKEUP (LOCA)
8	2.56E-10	4.60E-02	%T-LOPP	LOSS OF PREFERRED POWER TRANSIENT
		4.80E-02	C12-XHE-MH-F015A	MISPOSITION OF VALVE F015A
		4.80E-02	C12-XHE-MH-F015B	MISPOSITION OF VALVE F015B
		1.50E-05	E50-SQV-CF-OPENALL	CCF OF ALL SQUIB VALVES TO OPEN
		1.61E-01	XXX-XHE-FO-LPMAKEUP	OP. FAILS TO RECOG. NEED FOR LOW PRESS. MAKEUP (LOCA)
9	1.78E-10	4.60E-02	%T-LOPP	LOSS OF PREFERRED POWER TRANSIENT
		1.60E-03	B21-UV_-CC-F102B	CHECK VALVE #1 IN FEEDWATER LINE B FAILS TO REOPEN
		1.50E-05	E50-SQV-CF-GDCS7OPEN	CCF OF 7 SQUIB VALVES IN GDCS LINES TO OPEN
		1.61E-01	XXX-XHE-FO-LPMAKEUP	OP. FAILS TO RECOG. NEED FOR LOW PRESS. MAKEUP (LOCA)
10	1.78E-10	4.60E-02	%T-LOPP	LOSS OF PREFERRED POWER TRANSIENT
		1.60E-03	B21-UV_-CC-F102B	CHECK VALVE #1 IN FEEDWATER LINE B FAILS TO REOPEN
		1.50E-05	E50-SQV-CF-OPENALL	CCF OF ALL SQUIB VALVES TO OPEN
		1.61E-01	XXX-XHE-FO-LPMAKEUP	OP. FAILS TO RECOG. NEED FOR LOW PRESS. MAKEUP (LOCA)
11	1.78E-10	4.60E-02	%T-LOPP	LOSS OF PREFERRED POWER TRANSIENT
		1.60E-03	B21-UV_-CC-F103B	CHECK VALVE #2 IN FEEDWATER LINE B FAILS TO REOPEN
		1.50E-05	E50-SQV-CF-GDCS7OPEN	CCF OF 7 SQUIB VALVES IN GDCS LINES TO OPEN
		1.61E-01	XXX-XHE-FO-LPMAKEUP	OP. FAILS TO RECOG. NEED FOR LOW PRESS. MAKEUP (LOCA)
12	1.78E-10	4.60E-02	%T-LOPP	LOSS OF PREFERRED POWER TRANSIENT
		1.60E-03	B21-UV_-CC-F103B	CHECK VALVE #2 IN FEEDWATER LINE B FAILS TO REOPEN
		1.50E-05	E50-SQV-CF-OPENALL	CCF OF ALL SQUIB VALVES TO OPEN

Table 7.2-7

Sequence 1 - Loss of Preferred Power Transient (T-LOPP044)

#	Cutset Probability	Event Probability	Event Name	Event Description
		1.61E-01	XXX-XHE-FO-LPMAKEUP	OP. FAILS TO RECOG. NEED FOR LOW PRESS. MAKEUP (LOCA)
13	1.78E-10	4.60E-02	%T-LOPP	LOSS OF PREFERRED POWER TRANSIENT
		1.60E-03	C12-UV_-CC-F022	CHECK VALVE F022 FAILS TO OPEN
		1.50E-05	E50-SQV-CF-GDCS7OPEN	CCF OF 7 SQUIB VALVES IN GDCS LINES TO OPEN
		1.61E-01	XXX-XHE-FO-LPMAKEUP	OP. FAILS TO RECOG. NEED FOR LOW PRESS. MAKEUP (LOCA)
14	1.78E-10	4.60E-02	%T-LOPP	LOSS OF PREFERRED POWER TRANSIENT
		1.60E-03	C12-UV_-CC-F022	CHECK VALVE F022 FAILS TO OPEN
		1.50E-05	E50-SQV-CF-OPENALL	CCF OF ALL SQUIB VALVES TO OPEN
		1.61E-01	XXX-XHE-FO-LPMAKEUP	OP. FAILS TO RECOG. NEED FOR LOW PRESS. MAKEUP (LOCA)
15	7.63E-11	4.60E-02	%T-LOPP	LOSS OF PREFERRED POWER TRANSIENT
		4.80E-02	C12-XHE-MH-F013A	MISPOSITION OF VALVE F013A
		4.80E-02	C12-XHE-MH-F013B	MISPOSITION OF VALVE F013B
		1.50E-05	E50-SQV-CF-GDCS7OPEN	CCF OF 7 SQUIB VALVES IN GDCS LINES TO OPEN
		4.80E-02	G21-XHE-MH-F334	MISPOSITION OF VALVE F334
16	7.63E-11	4.60E-02	%T-LOPP	LOSS OF PREFERRED POWER TRANSIENT
		4.80E-02	C12-XHE-MH-F013A	MISPOSITION OF VALVE F013A
		4.80E-02	C12-XHE-MH-F013B	MISPOSITION OF VALVE F013B
		1.50E-05	E50-SQV-CF-OPENALL	CCF OF ALL SQUIB VALVES TO OPEN
		4.80E-02	G21-XHE-MH-F334	MISPOSITION OF VALVE F334
17	7.63E-11	4.60E-02	%T-LOPP	LOSS OF PREFERRED POWER TRANSIENT
		4.80E-02	C12-XHE-MH-F013A	MISPOSITION OF VALVE F013A
		4.80E-02	C12-XHE-MH-F015B	MISPOSITION OF VALVE F015B
		1.50E-05	E50-SQV-CF-GDCS7OPEN	CCF OF 7 SQUIB VALVES IN GDCS LINES TO OPEN
		4.80E-02	G21-XHE-MH-F334	MISPOSITION OF VALVE F334
18	7.63E-11	4.60E-02	%T-LOPP	LOSS OF PREFERRED POWER TRANSIENT
		4.80E-02	C12-XHE-MH-F013A	MISPOSITION OF VALVE F013A
		4.80E-02	C12-XHE-MH-F015B	MISPOSITION OF VALVE F015B
		1.50E-05	E50-SQV-CF-OPENALL	CCF OF ALL SQUIB VALVES TO OPEN

Table 7.2-7

Sequence 1 - Loss of Preferred Power Transient (T-LOPP044)

#	Cutset Probability	Event Probability	Event Name	Event Description
		4.80E-02	G21-XHE-MH-F334	MISPOSITION OF VALVE F334
19	7.63E-11	4.60E-02	%T-LOPP	LOSS OF PREFERRED POWER TRANSIENT
		4.80E-02	C12-XHE-MH-F013B	MISPOSITION OF VALVE F013B
		4.80E-02	C12-XHE-MH-F015A	MISPOSITION OF VALVE F015A
		1.50E-05	E50-SQV-CF-GDCS7OPEN	CCF OF 7 SQUIB VALVES IN GDCS LINES TO OPEN
		4.80E-02	G21-XHE-MH-F334	MISPOSITION OF VALVE F334
20	7.63E-11	4.60E-02	%T-LOPP	LOSS OF PREFERRED POWER TRANSIENT
		4.80E-02	C12-XHE-MH-F013B	MISPOSITION OF VALVE F013B
		4.80E-02	C12-XHE-MH-F015A	MISPOSITION OF VALVE F015A
		1.50E-05	E50-SQV-CF-OPENALL	CCF OF ALL SQUIB VALVES TO OPEN
		4.80E-02	G21-XHE-MH-F334	MISPOSITION OF VALVE F334
21	7.63E-11	4.60E-02	%T-LOPP	LOSS OF PREFERRED POWER TRANSIENT
		4.80E-02	C12-XHE-MH-F015A	MISPOSITION OF VALVE F015A
		4.80E-02	C12-XHE-MH-F015B	MISPOSITION OF VALVE F015B
		1.50E-05	E50-SQV-CF-GDCS7OPEN	CCF OF 7 SQUIB VALVES IN GDCS LINES TO OPEN
		4.80E-02	G21-XHE-MH-F334	MISPOSITION OF VALVE F334
22	7.63E-11	4.60E-02	%T-LOPP	LOSS OF PREFERRED POWER TRANSIENT
		4.80E-02	C12-XHE-MH-F015A	MISPOSITION OF VALVE F015A
		4.80E-02	C12-XHE-MH-F015B	MISPOSITION OF VALVE F015B
		1.50E-05	E50-SQV-CF-OPENALL	CCF OF ALL SQUIB VALVES TO OPEN
		4.80E-02	G21-XHE-MH-F334	MISPOSITION OF VALVE F334
23	6.81E-11	4.60E-02	%T-LOPP	LOSS OF PREFERRED POWER TRANSIENT
		1.50E-05	E50-SQV-CF-GDCS7OPEN	CCF OF 7 SQUIB VALVES IN GDCS LINES TO OPEN
		6.13E-01	R11-SYS-FF-NOREC	FAILURE IN OFFSITE POWER RECOVERY
		1.00E-03	R16-BT_-TM-R16BTA2	BATTERY R16-BTA2 IN TEST
		1.61E-01	XXX-XHE-FO-LPMAKEUP	OP. FAILS TO RECOG. NEED FOR LOW PRESS. MAKEUP (LOCA)
24	6.81E-11	4.60E-02	%T-LOPP	LOSS OF PREFERRED POWER TRANSIENT
		1.50E-05	E50-SQV-CF-GDCS7OPEN	CCF OF 7 SQUIB VALVES IN GDCS LINES TO OPEN

Table 7.2-7

Sequence 1 - Loss of Preferred Power Transient (T-LOPP044)

#	Cutset Probability	Event Probability	Event Name	Event Description
		6.13E-01	R11-SYS-FF-NOREC	FAILURE IN OFFSITE POWER RECOVERY
		1.00E-03	R16-BT -TM-R16BTB2	BATTERY R16-BTB2 IN TEST
		1.61E-01	XXX-XHE-FO-LPMAKEUP	OP. FAILS TO RECOG. NEED FOR LOW PRESS. MAKEUP (LOCA)
25	6.81E-11	4.60E-02	%T-LOPP	LOSS OF PREFERRED POWER TRANSIENT
		1.50E-05	E50-SQV-CF-OPENALL	CCF OF ALL SQUIB VALVES TO OPEN
		6.13E-01	R11-SYS-FF-NOREC	FAILURE IN OFFSITE POWER RECOVERY
		1.00E-03	R16-BT -TM-R16BTA2	BATTERY R16-BTA2 IN TEST
		1.61E-01	XXX-XHE-FO-LPMAKEUP	OP. FAILS TO RECOG. NEED FOR LOW PRESS. MAKEUP (LOCA)

Table 11-1

Results of the 72-Hour Mission Time Sensitivity Analysis

Initiating Event	Quantification Results without CCV Treatment				Quantification Results after CCV Treatment			
	Acc. Sequence	CDF [/yr]	% of Class	% of Total	Acc. Sequence	CDF [/yr]	% of Class	% of Total
T-GEN	T-GEN022	4.22E-13	0.02%	0.00%	T-CCV02	3.13E-11	73.46%	0.11%
	T-GEN025	1.97E-13	0.01%	0.00%				
T-FDW	T-FDW039	3.27E-11	1.30%	0.10%				
	T-FDW042	8.72E-13	0.03%	0.00%				
T-IORV	T-IORV023	4.86E-12	0.19%	0.02%				
	T-IORV010	3.01E-13	0.01%	0.00%	T-IORV010	3.01E-13	0.71%	0.00%
T-SW	T-SW005	4.58E-12	0.18%	0.01%	T-SW005	4.58E-12	10.75%	0.02%
	T-SW007	1.20E-12	0.05%	0.00%	T-SW007	1.20E-12	2.81%	0.00%
	T-SW014	6.38E-12	0.25%	0.02%	T-SWCCV02	4.04E-13	0.95%	0.00%
	T-SW016	2.68E-12	0.11%	0.01%				
T-LOPP	T-LOPP008	2.20E-13	0.01%	0.00%	T-LOPPACCV02	ε		
	T-LOPP011	1.03E-13	0.00%	0.00%				
	T-LOPP021	3.92E-12	0.16%	0.01%	T-LOPPBCCV03	4.82E-12	11.33%	0.02%
	T-LOPP024	1.83E-12	0.07%	0.01%				
	T-LOPP036	1.51E-11	0.60%	0.05%				
	T-LOPP039	1.13E-09	45.00%	3.56%				
	T-LOPP042	1.94E-10	7.74%	0.61%				
LL-S	LL-S-015	9.99E-10	39.79%	3.15%	LL-S-CCV05	ε		
LL-S-FDWA	LL-S-FDWA014	1.11E-11	0.44%	0.04%	LL-S-FDWACCV04	ε		
LL-S-FDWB	LL-S-FDWB014	1.11E-11	0.44%	0.04%	LL-S-FDWBCCV04	ε		
ML-L	ML-L-016	7.53E-11	3.00%	0.24%	ML-L-CCV05	ε		
ML-L-RWCU	ML-L-RWCU015	1.47E-11	0.58%	0.05%	ML-L-RWCUCCV04	ε		
Class II Totals:		**2.51E-09**	100.00%	**7.91%**		**4.26E-11**	100.00%	**0.15%**
Total CDF, without Class II:		**2.92E-08**				**2.92E-08**		
Total CDF, including Class II:		**3.17E-08**				**2.93E-08**		

Note: "ε" indicates that the accident sequence quantification did not produce any cutsets above the truncation limit of 1.0E-13

ESBWR Risk Management Overview

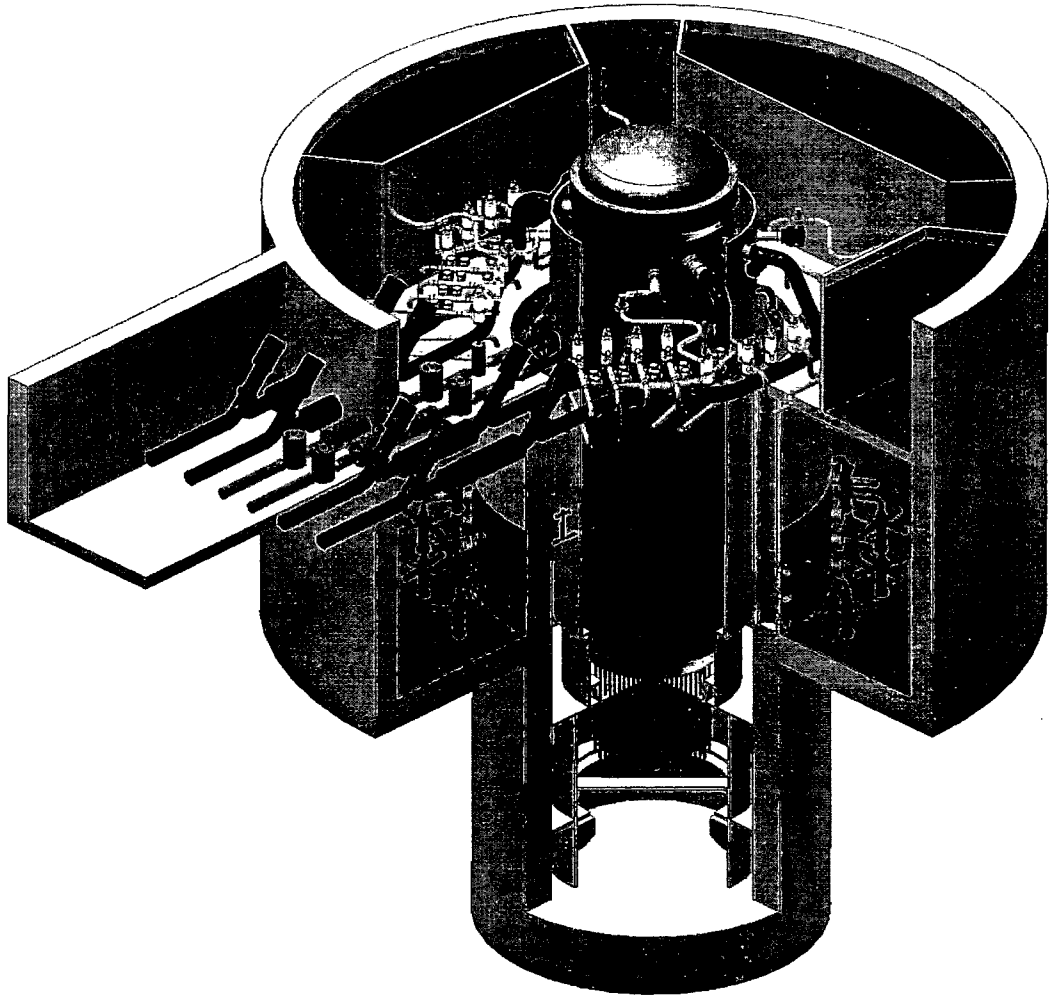

Presented By:
Rick Wachowiak
General Electric
December 14, 2006

imagination at work

GE Presentations in this Meeting

Overview of ESBWR & ESBWR PRA

Significant PRA Items for Revisions 1 and 2

Regulatory Treatment of Non-Safety Systems

Discussion of Previously Raised Issues

Copywrite © 2006 by GE Energy / Nuclear

Background For This Meeting

Last Meeting Was in April 2006

Portions of PRA Had Been Revised

> Not All Members Had Seen Revised Parts

Further Dialog Determined To Be Necessary

Copywrite © 2006 by GE Energy / Nuclear

Purpose of this Meeting

Outline Strategy for Risk Management in ESBWR Design

Discuss Dominant Accident Sequences Produced by the Analysis

Inform Subcommittee of Risk Reducing Design Changes That Have Been Implemented

Provide Update on RTNSS

Discuss Methods and Analyses Prior to Next Major Revision

Copywrite © 2006 by GE Energy / Nuclear

ESBWR Basic Parameters

4,500 Megawatt Core Thermal Power

~1, 550 Megawatt Electric Gross

> Nominal Summer Rating

Natural Circulation

> No recirculation pumps

Passive Safety Systems

> No ECCS pumps

> 72 hours passive capability

Copywrite © 2006 by GE Energy / Nuclear

ESBWR Overview

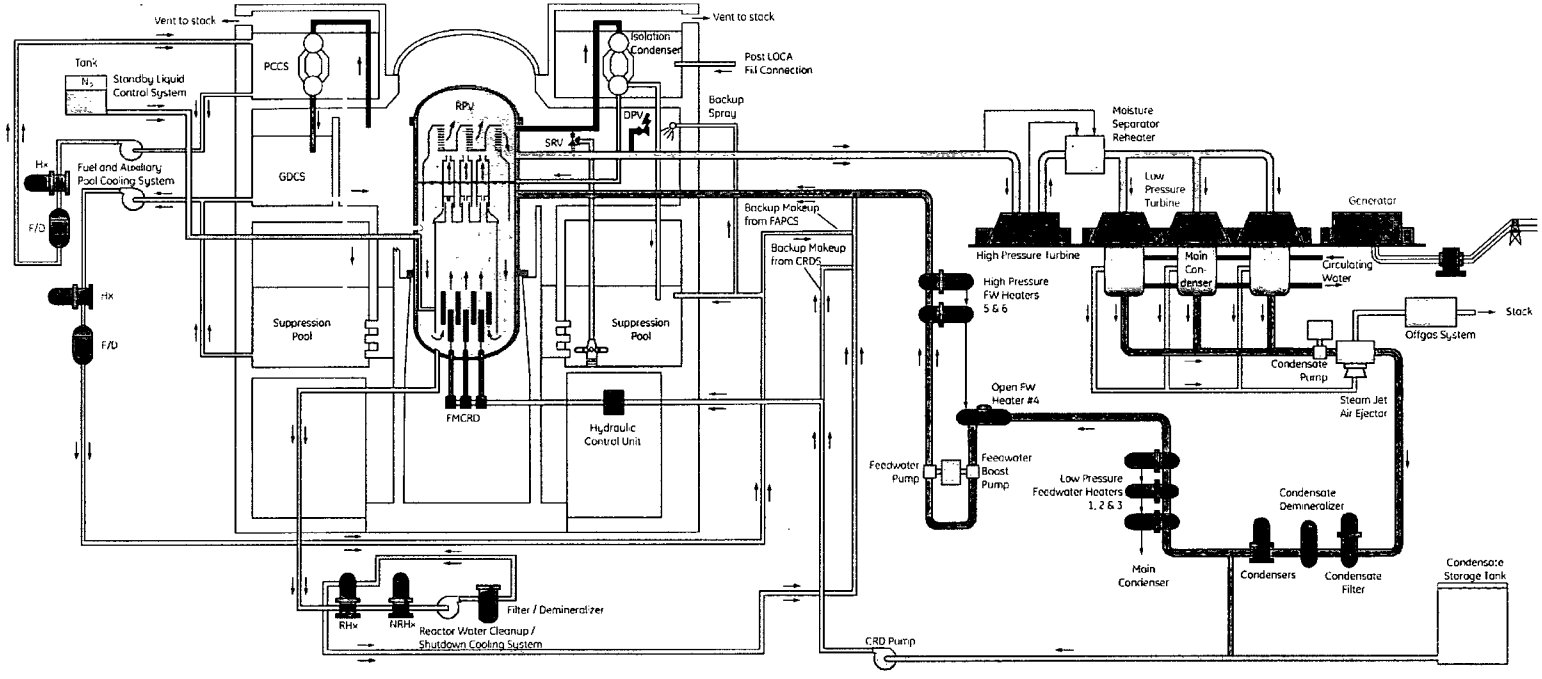

Copywrite © 2006 by GE Energy / Nuclear

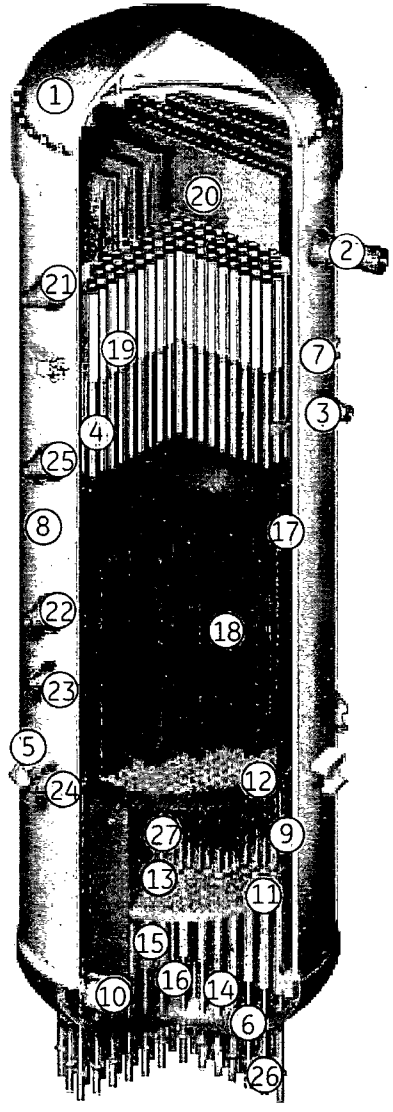

ESBWR

1. Vessel Flange and closure head
2. Steam outlet flow restrictor
3. Feedwater nozzle
4. Feedwater sparger
5. Vessel support
6. Vessel bottom head
7. Stabilizer
8. Forged shell rings
9. Core shroud
10. Shroud support brackets
11. Core plate
12. Top guide
13. Fuel supports
14. Control rod drive housings
15 Control rod guide tubes
16. In-core housing
17. Chimney
18. Chimney partitions
19. Steam separator assembly
20. Steam dryer assembly
21. DPV/IC outlet
22. IC return
23. GDCS inlet
24. GDCS equalizing line inlet
25. RWCU/SDC outlet
26. Control rod drives
27. Fuel and control rods

Copywrite © 2006 by GE Energy / Nuclear

Reactor and Fuel Building

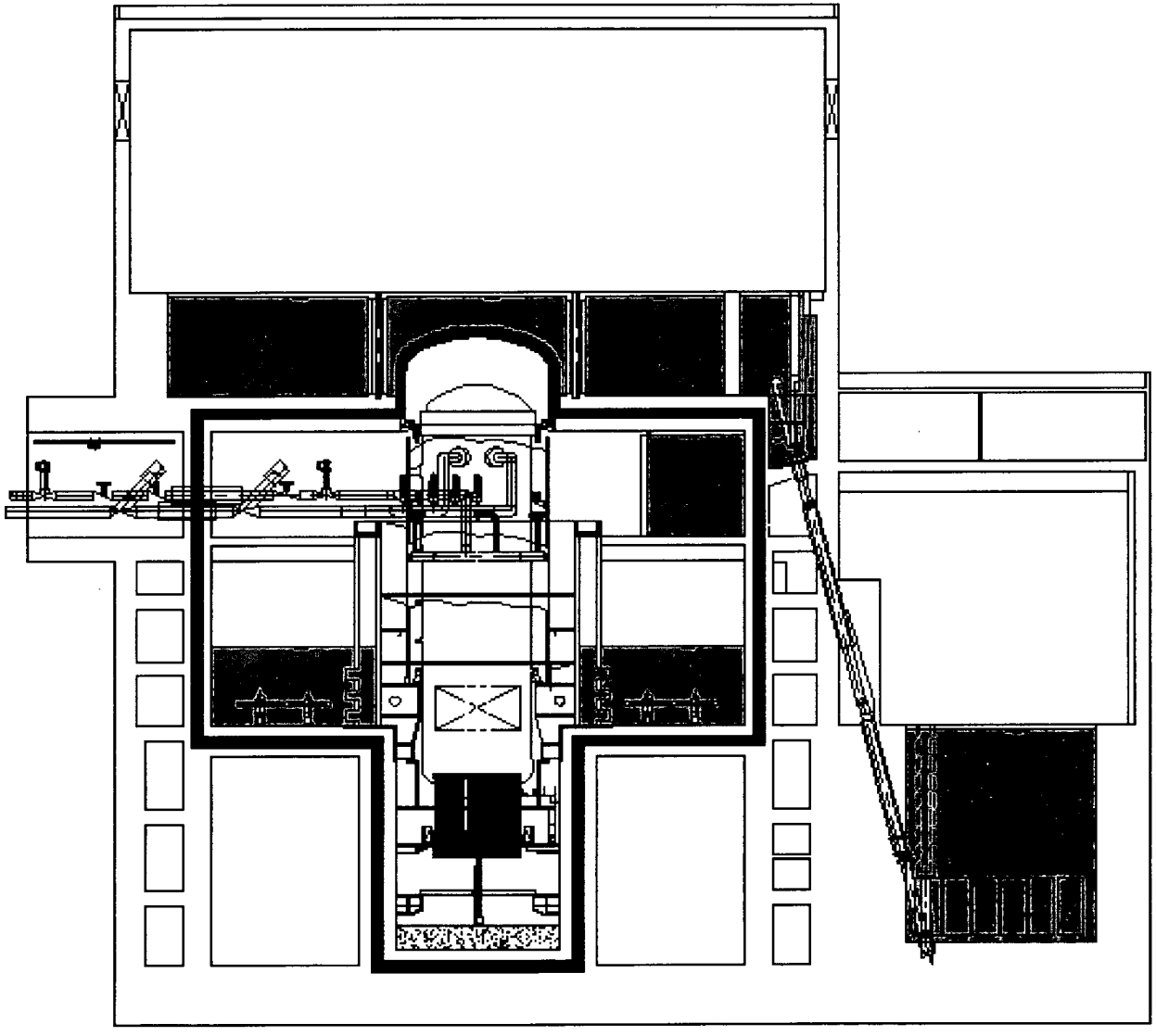

Copywrite © 2006 by GE Energy / Nuclear

Containment

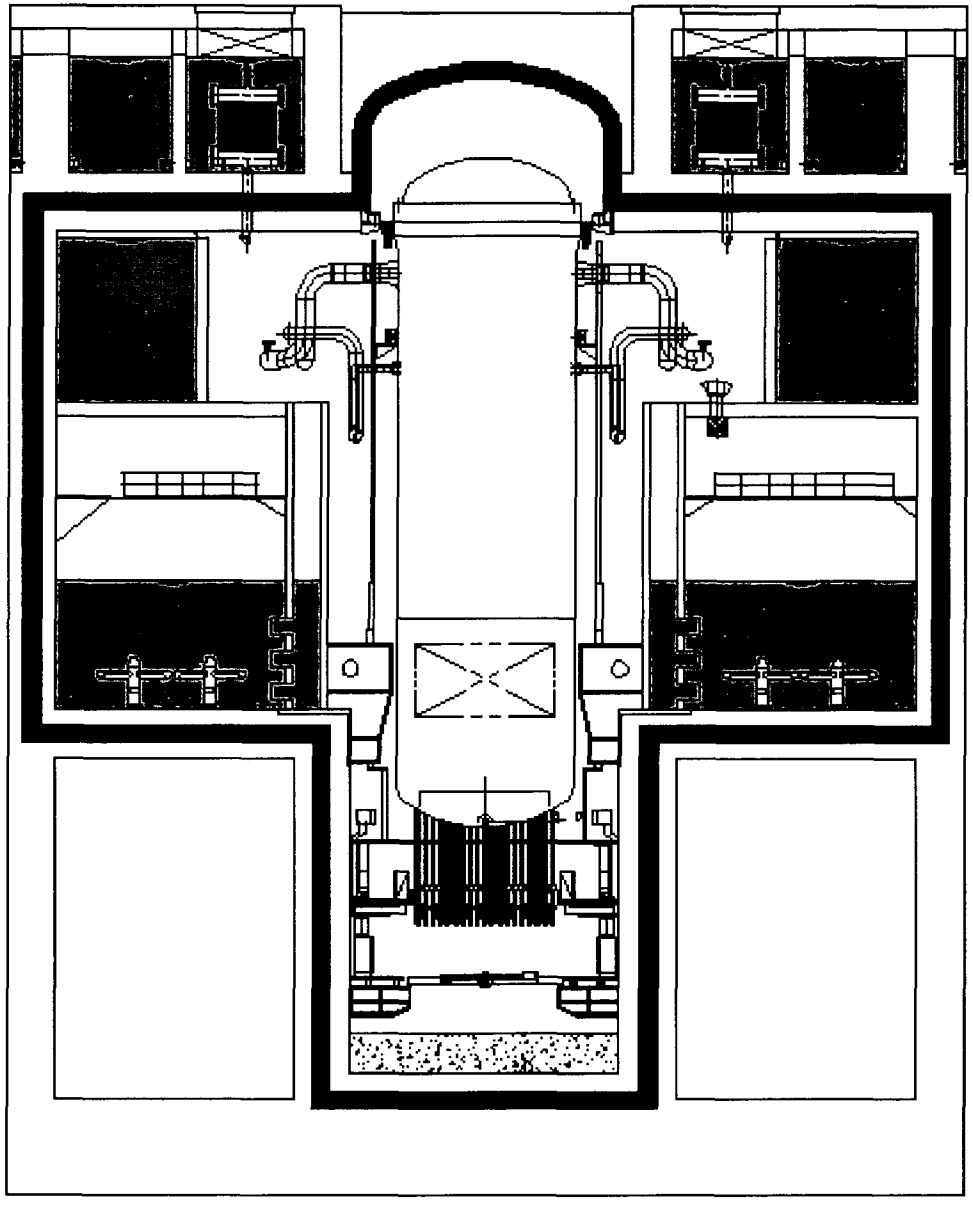

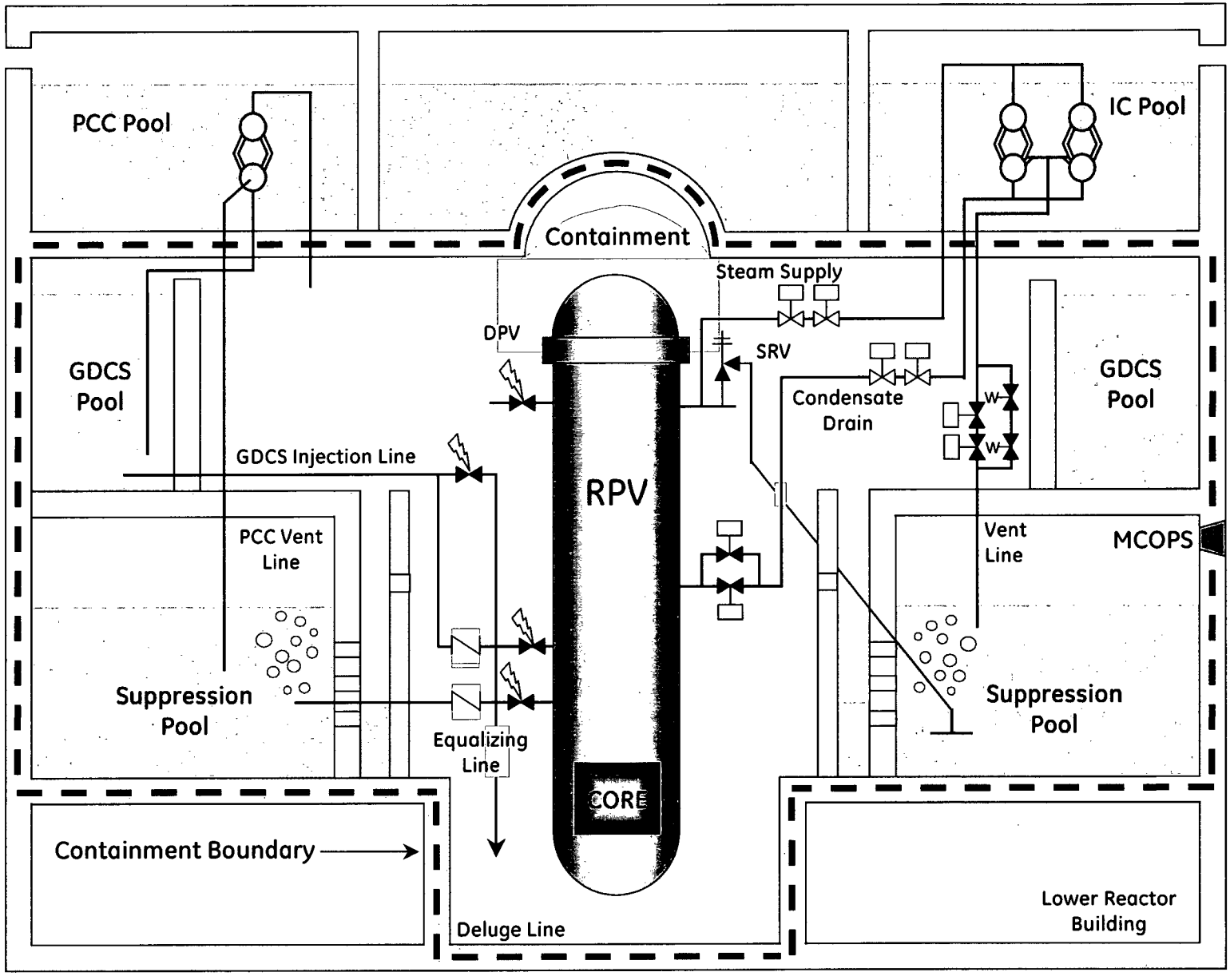

Copywrite © 2006 by GE Energy / Nuclear

BiMAC Detail

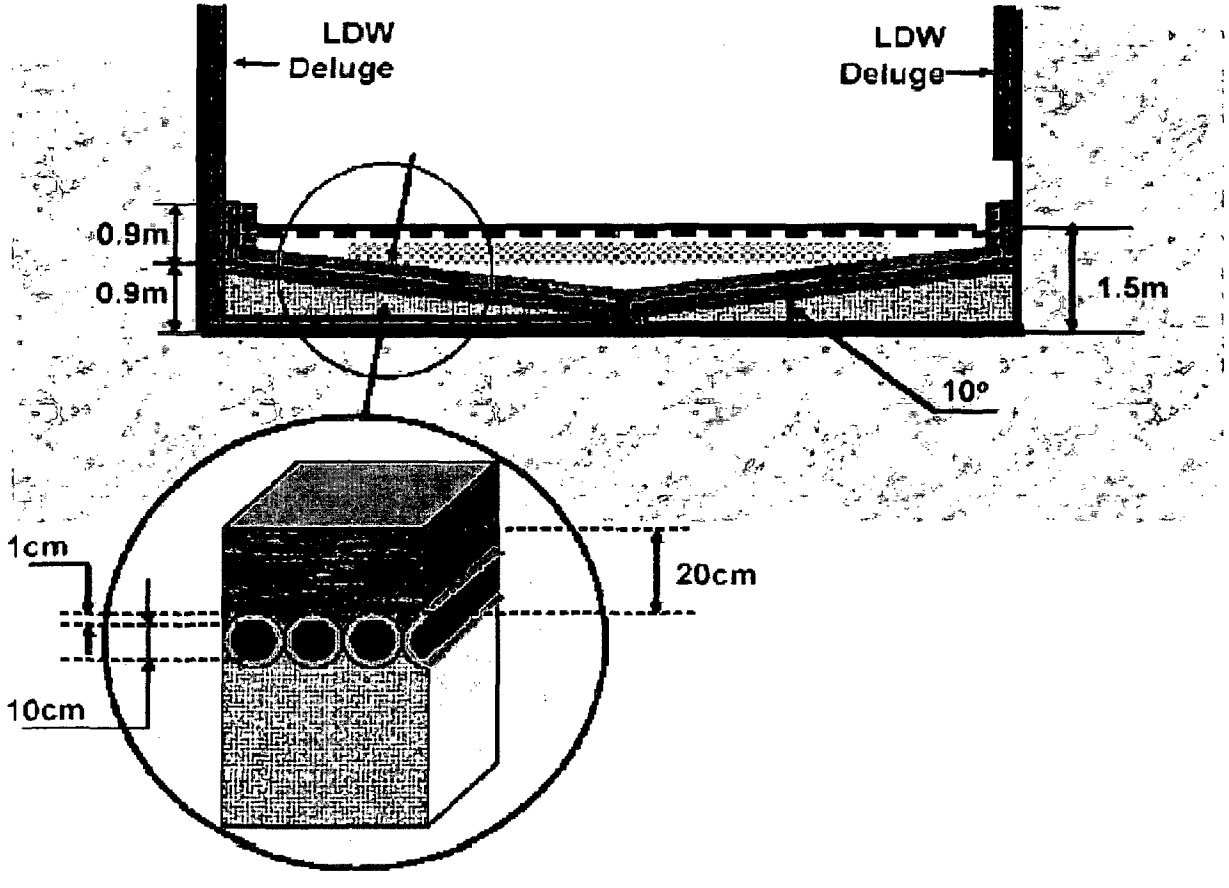

Copywrite © 2006 by GE Energy / Nuclear

LOCA Water Level Response

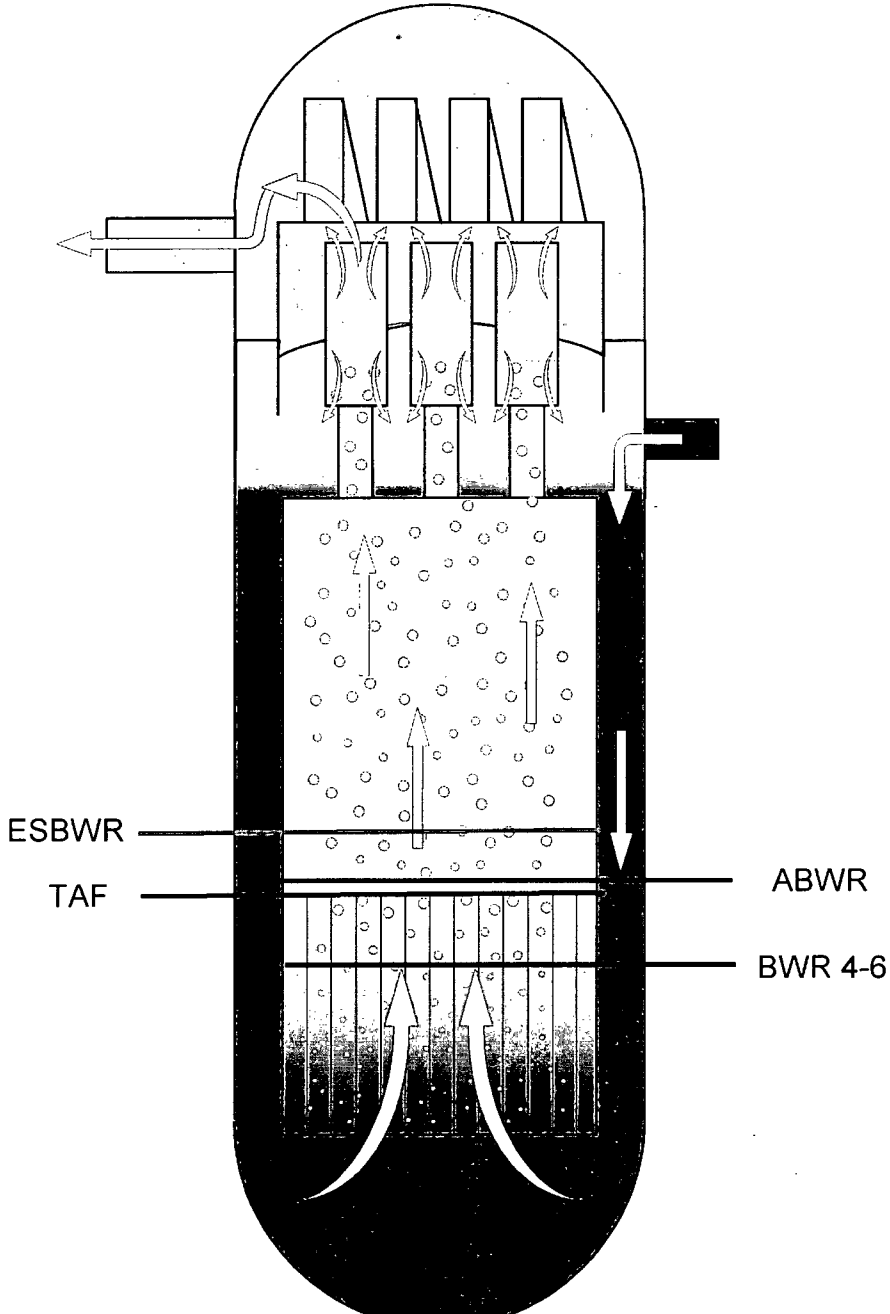

72 Hours Passive Capability

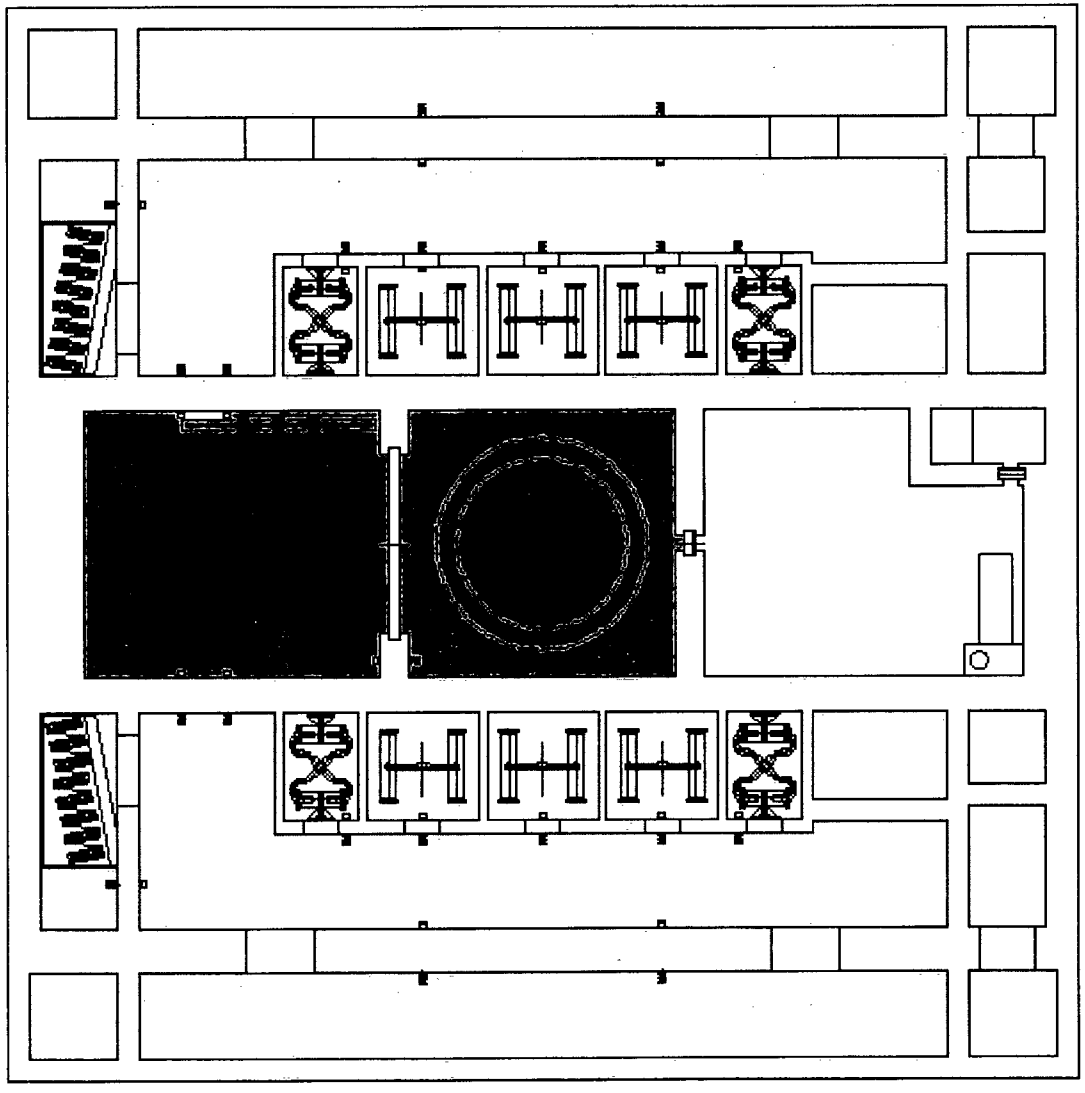

Copywrite © 2006 by GE Energy / Nuclear

ESBWR Risk Management Program Goals DCD Phase

Demonstrate that ESBWR Meets Established Risk Goals

Demonstrate that ESBWR Design Presents Lower Risk to Public than Existing Plants

Identify Non-Safety Functions Requiring Enhanced Regulatory Oversight

Systematic Search for Vulnerabilities

Extend Defense-in-Depth to Severe Accident Scenarios

Provide Framework for the Plant Specific PRA

Copywrite © 2006 by GE Energy / Nuclear

Evolution of a Design and PRA

Conceptual Design	Design Base (DCD)	Detailed Design	Construction Design	
Is Design Feasible?	Can Design be Licensed?	Will Design be Licensed?	Confirmation of Assumptions	
Low Design Detail	Major Components Specified	All Components Specified	All Components Described	
Qualitative Risk Assessment	Qualitative & Quantitative PRA	Quantitative PRA with Gaps	Quantitative PRA with Fewer Gaps	
Defense-in-Depth Concepts	Defense-in-Depth Analyzed	Defense-in-Depth Mostly Resolved	No Defense-in-Depth Issues	
Past Vulnerabilities Addressed	Sequence Level Vulnerabilities Eliminated	System Level Vulnerabilities Eliminated	Component Level Vulnerabilities Eliminated	

← DCD / COLA Level of Design Detail

Copywrite © 2006 by GE Energy / Nuclear

Scope of DCD PRA

Internal Events - Full Power

> Levels 1, 2, and 3

Internal Events – Shutdown

> Level 1 and Simplified Level 2

External Events

> Internal Fire (Bounding), Internal Flood, High Winds

> Seismic Margins

> Level 1

> Full Power and Shutdown

This Scope is Appropriate for ESBWR PRA Program Goals

Copywrite © 2006 by GE Energy / Nuclear

Extended Defense – In - Depth

Classical Design / Analyses Provides DID using "Design Basis" Assumptions

ESBWR Adds Severe Accident Consideration

Main Objective is to Address Common Cause Failures

> Historically Addressed by Additional Requirements on SSCs

> ESBWR Adds Diversity to Design to Minimize Effect of CCF

Assessment of Non-Safety Equipment Performance Provided in Licensing Basis

> Used to provide operational requirements (RTNSS)

Copywrite © 2006 by GE Energy / Nuclear

PRA as a Design Tool

Overall Objective:

Eliminate Severe Accident Vulnerabilities

PRA Provides a Systematic Means for Finding and Eliminating These Vulnerabilities

Effectiveness May Be Limited By Information Availability Early in Design Phase

Easier to Make Corrections Earlier in Design Phase

Imperfect Tool is Better than None at All

Copywrite © 2006 by GE Energy / Nuclear

Key Features of ESBWR Risk Management

Passive Safety Systems

Active Asset Protection Systems

Support System Diversity

Target Configuration for Core Damage Prevention Functions

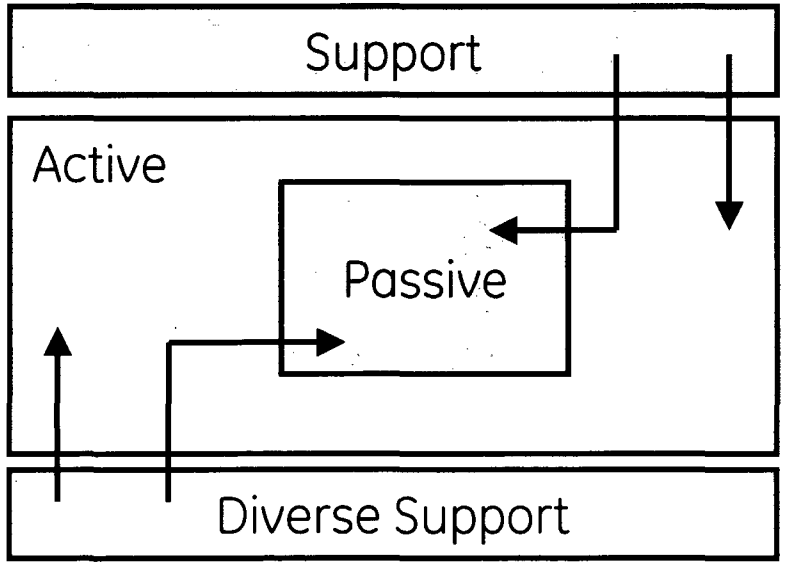

Copywrite © 2006 by GE Energy / Nuclear

Functions for Core Damage Prevention

	Passive	Active
Reactivity Control	RPS SLCS	ARI FMCRD
Pressure Control	ICS SRV	Main Condenser
Inventory (High Press)	ICS	Feedwater CRD
Inventory (Low Press)	GDCS	FAPCS Fire Water Injection
Depressurization	DPV	SRV
Decay Heat Removal	PCCS ICS	Main Condenser RWCU

Copywrite © 2006 by GE Energy / Nuclear

Level 1 Internal Events Results

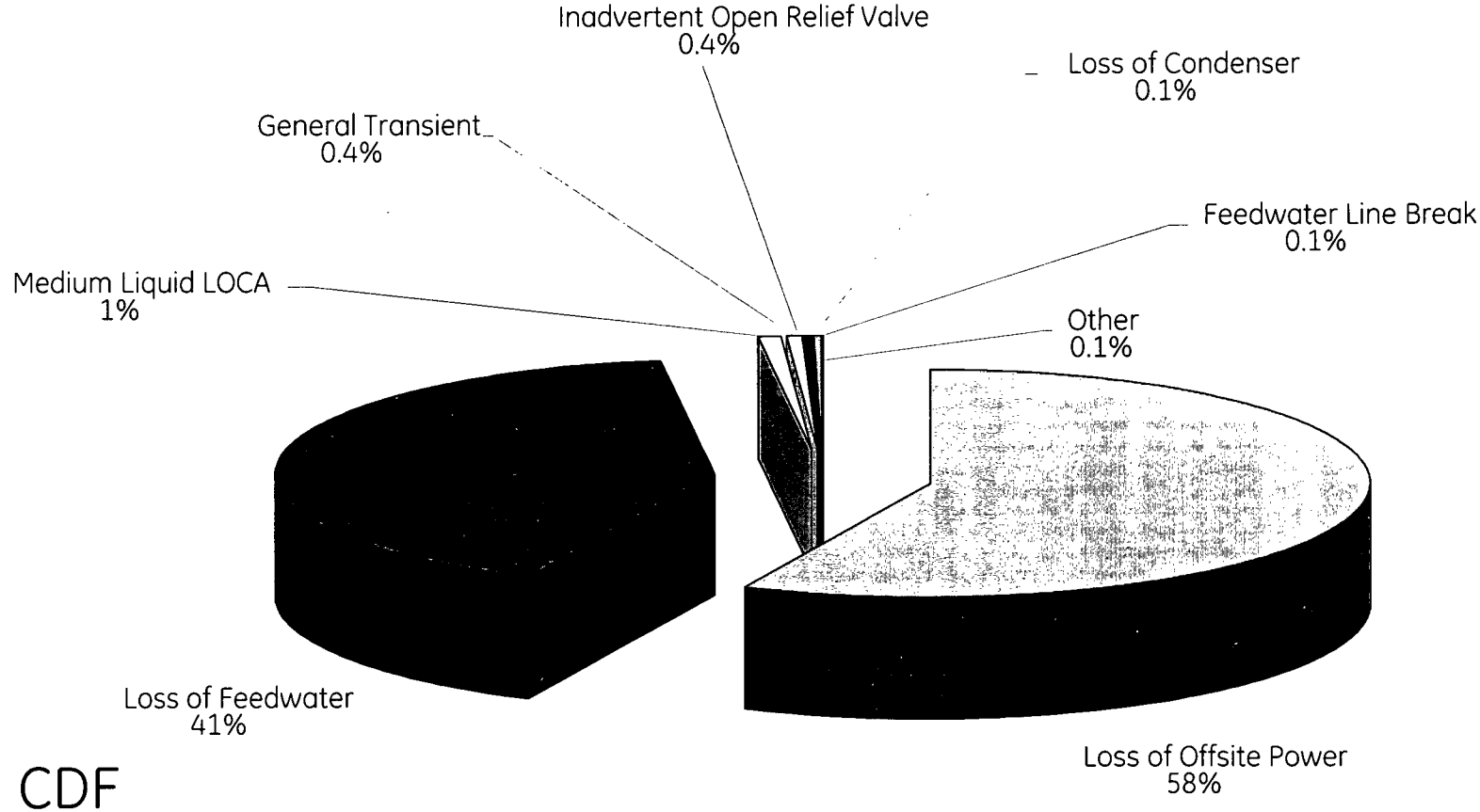

Total CDF

Point Estimate: 2.9×10^{-8}

Mean: 2.6×10^{-8}

95th: 8.3×10^{-8}

Copywrite © 2006 by GE Energy / Nuclear

Level 2 Internal Events Breakdown

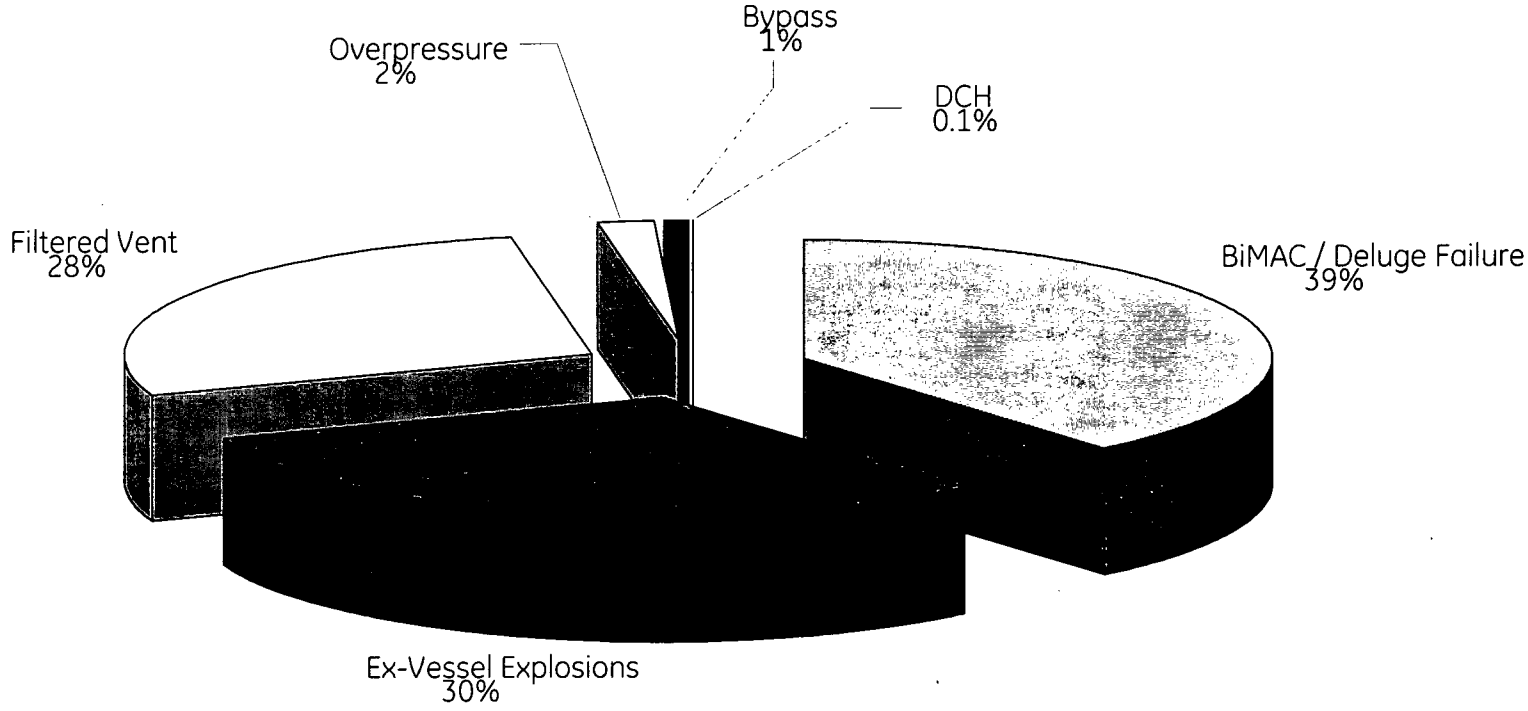

Total LRF

8×10^{-10}

This is Less Than 3% of CDF

Copywrite © 2006 by GE Energy / Nuclear

External Events And Shutdown Results

Internal Events Shutdown

CDF: 5.6×10^{-9} LRF: Assumes no containment

Bounding Fire CDF

Power: 1.2×10^{-8} Shutdown: 2.3×10^{-8}

Flood CDF

Power: 3.7×10^{-9} Shutdown: 1.6×10^{-9}

High Wind CDF

Power and Shutdown: $< 10^{-10}$

When Detailed Design Is Considered, Fire and Flood Numbers Will Go Down

Copywrite © 2006 by GE Energy / Nuclear

Conclusions

ESBWR Design is Robust

Probability of Severe Accident is Remote

Use of PRA as a Design Tool Ensured this Result

Combination of Passive Safety, Active Non-Safety Systems, and Diversity Leads to these Results

Copywrite © 2006 by GE Energy / Nuclear

Probabilistic Risk Assessment

Update and
Information
Exchange

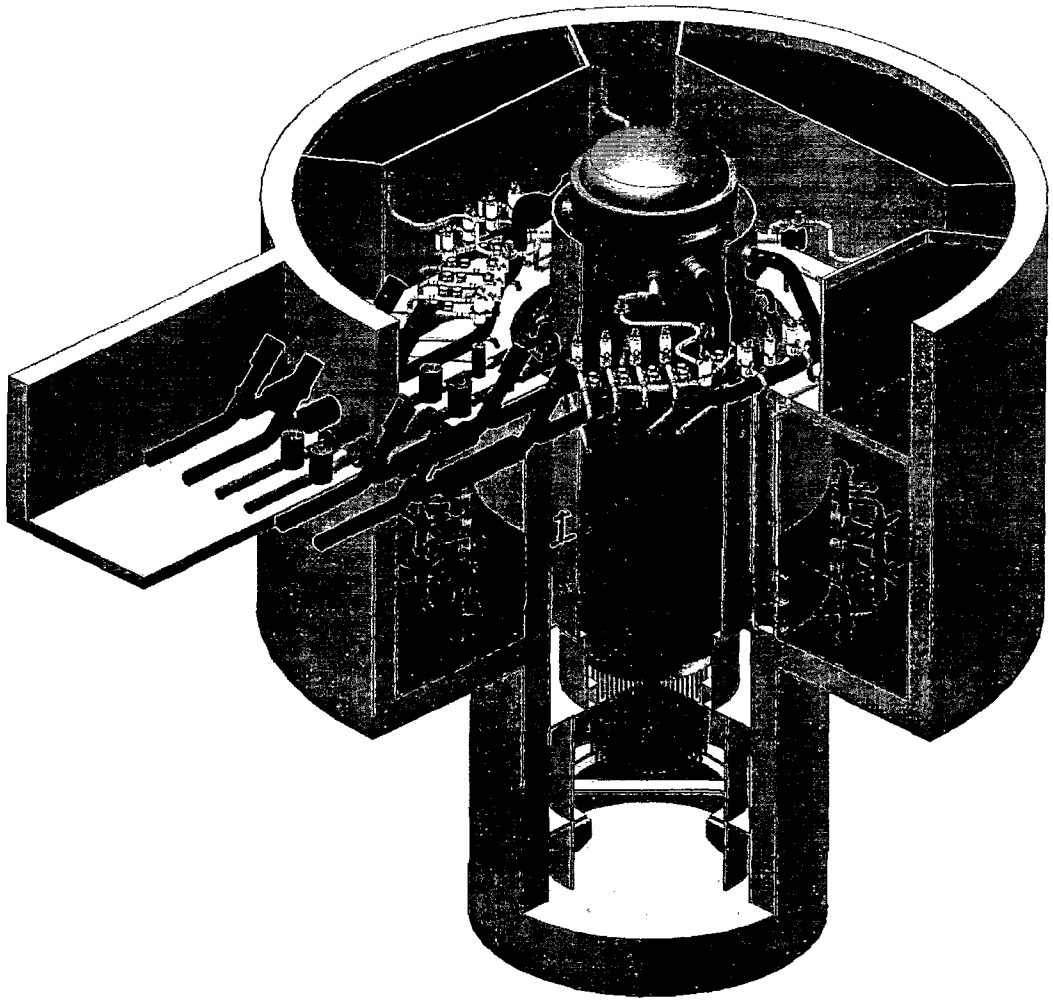

Presented By:
Rick Wachowiak
General Electric
December 14, 2006

imagination at work

GE Presentation Topics

PRA Rev 2 Scope
Affect of Major Design Changes

Copywrite © 2006 by GE Energy / Nuclear

Scope of PRA Revision 2 – Base Model

Isolation Condenser Additional Water Volume
I&C Architecture and Requirements
Additional Design Detail for BOP Systems
Revise Common Cause Model (MGL Method)
Move Model Detail to Event Trees
Eliminate Sequence Specific Logic Flags
Add Model Detail for 24 – 72 Hour Sequences
Reconcile Component Names With DCD
Include Shutdown and Class II Sequences in LRF
Other Design Details as Information Becomes Available

Copywrite © 2006 by GE Energy / Nuclear

Scope of PRA Revision 2 - Other

Basic Event Naming Convention May Change

> Required to implement URD database

> Eliminates patch in rev 1 model

Gate Names in Rev 1 Did Not Match Our Convention

Considering Direct Connection of CET to Level 1

Copywrite © 2006 by GE Energy / Nuclear

ICS Design Change

Add Volume to ICS Condensate Return Lines

$> 9\ m^3$ per IC

Allows Optimization of the Level 1 ECCS Signals

CRD Not Needed to Prevent Depressurization in Loss of Feedwater Events

Top 90% of Cutsets in Rev 1 Involve Loss of Feedwater + Loss of CRD

Copywrite © 2006 by GE Energy / Nuclear

ICS Design Change – Additional Figures

ICS P&ID	Figure 5.1-3 Rev 1
	Figure 5.1-3 Rev 2
LOFW Water Level	Figure 15.2-16c Rev 1
	Figure 15.2-16c Rev 2
TGEN Event Tree	Figure A.3-1 Rev 1
TFDW Event Tree	Figure A.3-3 Rev 1

Copywrite © 2006 by GE Energy / Nuclear

Digital Control and Instrumentation System Architecture

GE Has Chosen DCIS Architecture

Determined Diversity & Defense-In-Depth Requirements

Implementation of Safety-Related DCIS is Double Failure Proof

> Allows maintenance of 1 division without AOT

> OOS Time Controlled By TRM + Maintenance Rule

Copywrite © 2006 by GE Energy / Nuclear

Diversity & Defense-In-Depth Strategy

Safety	Safety-Related		Nonsafety-Related				
Category	E - DCIS		NE - DCIS				
System Families	RPS NMS	ECCS ESF	DPS	NUCLEAR CONTROL SYSTEMS	Balance of any NE-DCIS Systems	PCS	Severe Accident
Architecture	NUMAC Derived	Redundant	Triple Redundant	Triple Redundant	Dual Redundant	Workstations **	PLCs
Systems	RPS LD&IS (MSIV) NMS ATWS/SLCS*	ICS SRV/DPV GDCS LD&IS (Non-MSIV)	RPS ECCS Backup	FWC, PAS (Automation) SB&PC, T/G Control	PIP A, PIP B Balance Of Plant (Power Generation)	HMI, Alarms, SPDF, Historian, 3D-Monicore	Deluge System

*Non-Microprocessor based

** Dual redundant as necessary

Diversity Strategy

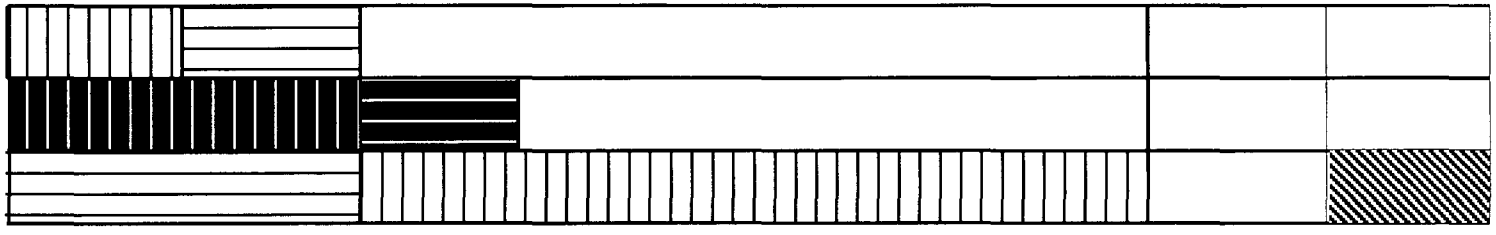

Check NEDO-33251 for Latest Version of this Figure

Copywrite © 2006 by GE Energy / Nuclear

Robust DCIS Implementation

Double Failure Proof (N-2)

Allows Single Failure Protection with One Division Out of Service

Enables Online Battery Testing

At Least 3 Safety Related Divisions Plus DPS Activates Safety Related Valves

Common Cause is the Only Way to Fail ECCS

Copywrite © 2006 by GE Energy / Nuclear

Squib Valve Example for N-2

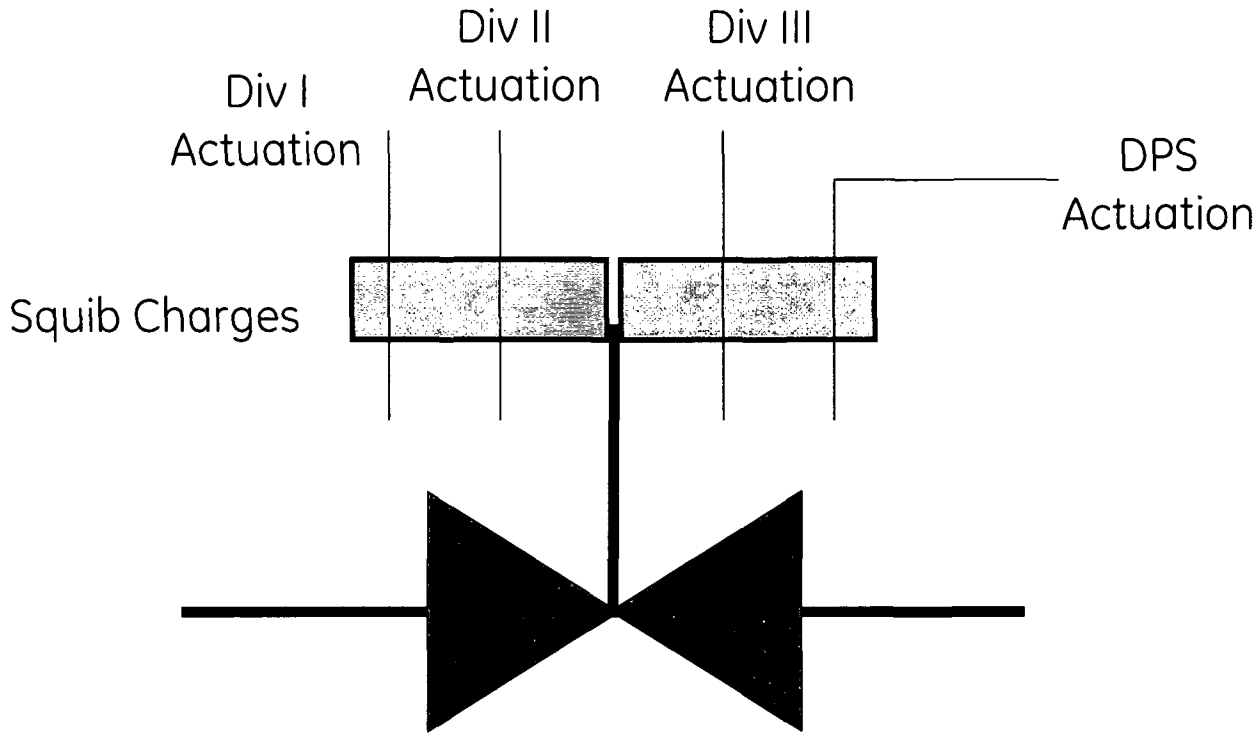

Div I OOS
Div II Fails

Div III + 4 Provides 2 of 4 Signal
Div III Provides Actuation

Valve Actuation is Successful

Copywrite © 2006 by GE Energy / Nuclear

DCIS Block Diagram

Next 6 Pages

Copywrite © 2006 by GE Energy / Nuclear

Data Acquisition Chassis (Division I, Typical)

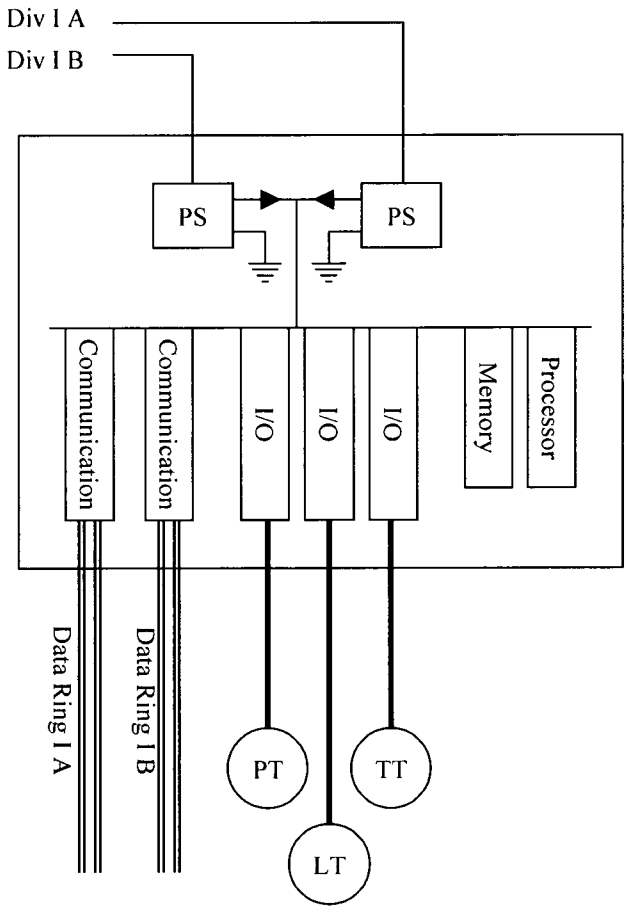

Load Driver Chassis (Division I, Typical)

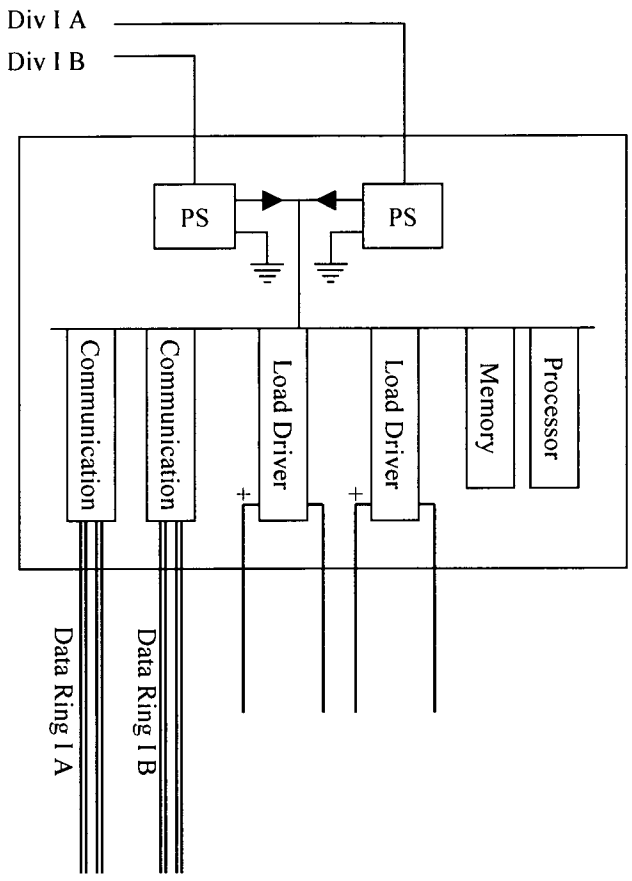

External Connections

- 120 V Uninterruptible AC
- 4 – 20 mA Dual Conductor
- Dual Counter-Rotating Fiber
- 120 V DC Single Conductor
- 120 V DC Dual Conductor

Copywrite © 2006 by GE Energy / Nuclear

Logic Chassis
(Division I, Typical)

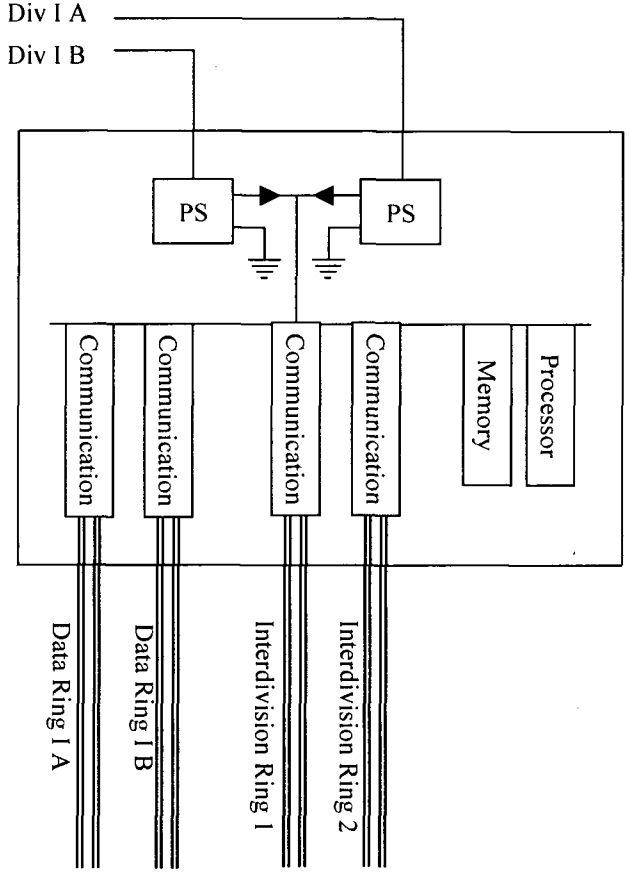

Copywrite © 2006 by GE Energy / Nuclear

Data Acquisition Cabinet
(Division I, Typical)

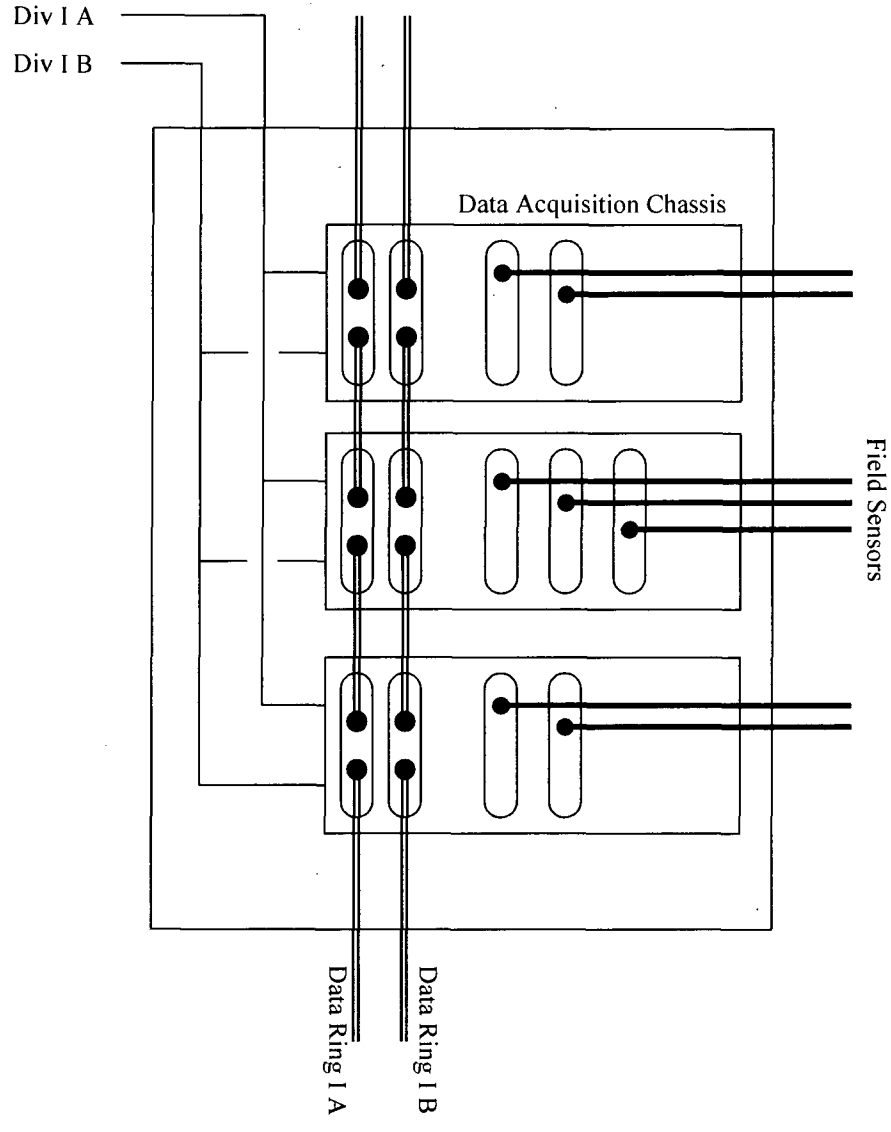

Copywrite © 2006 by GE Energy / Nuclear

Load Driver Cabinet Pair
(Division I, Typical)

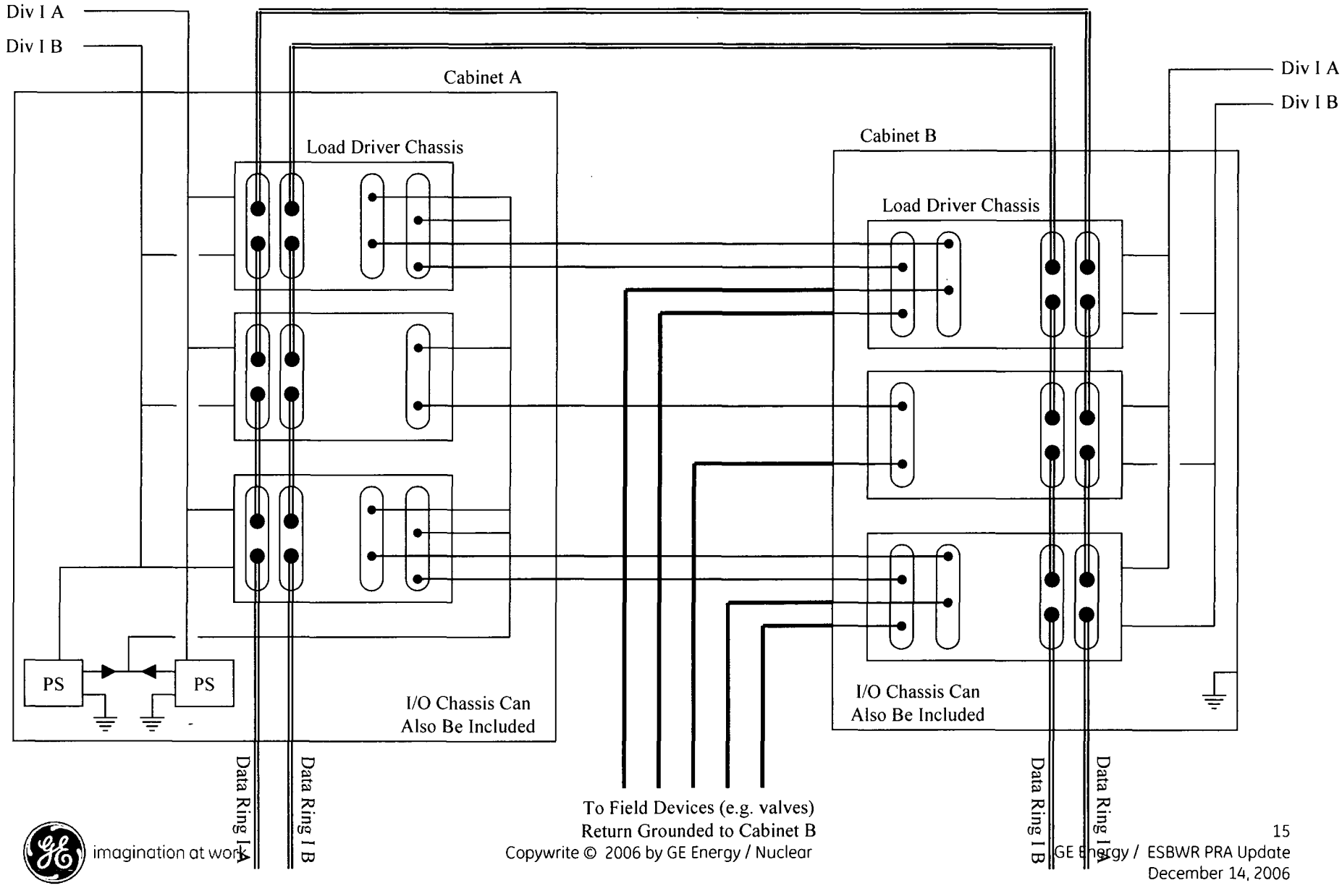

Copywrite © 2006 by GE Energy / Nuclear

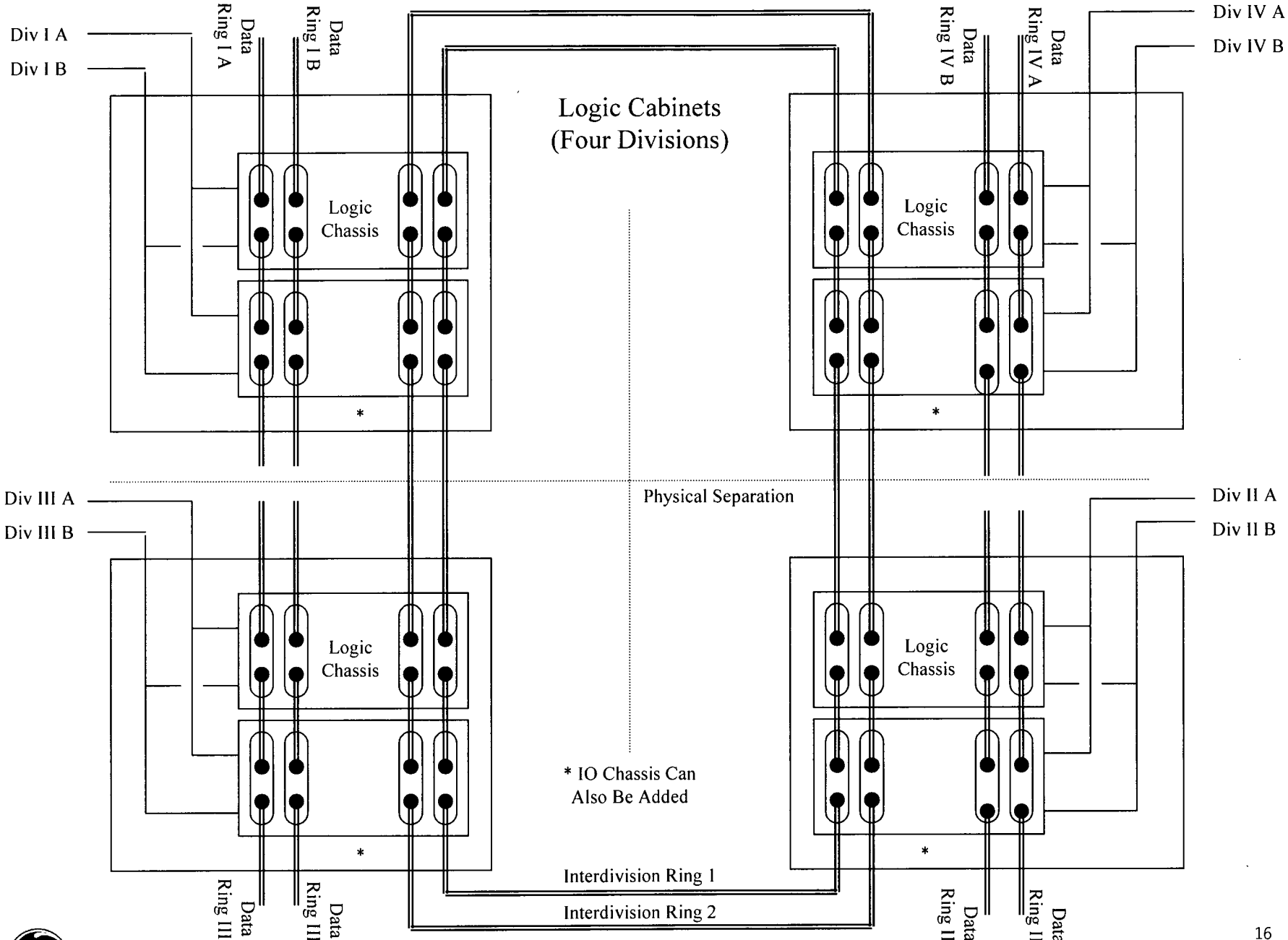

Copywrite © 2006 by GE Energy / Nuclear

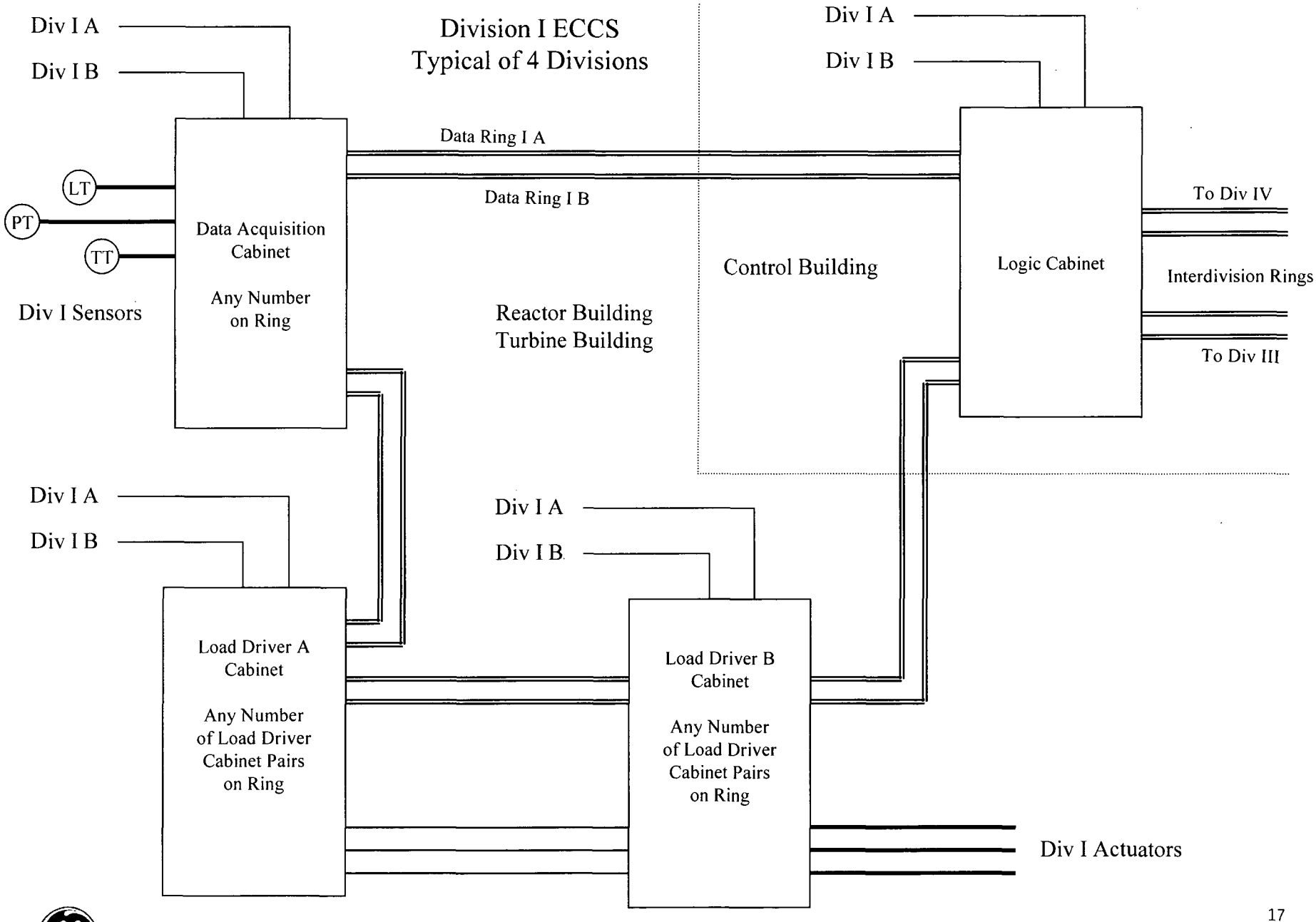

Copywrite © 2006 by GE Energy / Nuclear

Affect of Revision 2 Changes

Top Sequences and Cutsets are All Affected

Adds At Least One Failure Mode to Each Cutset

DCIS Design Provides Additional Protection

Revised Common Cause May Offset

Level 1 Model Results Available in April

Copywrite © 2006 by GE Energy / Nuclear

ESBWR
PROBABILISTIC RISK ASSESSMENT

STAFF UPDATE

ACRS - Reliability and Probabilistic Risk Assessment Subcommittee

December 14-15, 2006

Requests for Additional Information (RAIs)

- SER Chapter 19
- RAIs (PRA Rev 1)
  - Issued: 157
  - Review continues
- Responses (complete/partial): 84
- Responses remaining
  - Initial response: 73
  - Supplemental response: 15+
- Effect of PRA Revision 2 – to be determined

Schedule & Resources

Schedule

- ESBWR Design Certification
  - Design Control Document – Chapter 19, Revision 2
  - PRA Revision 2
- ESBWR Combined License Applications
  - Initial Applications – November 2007

Staff Resources

- Coordination of Parallel Reviews
  - Design Control Document
  - PRA (Rev 1 RAIs + Rev 2)
  - COL Applications
- Parallel SERs

Key Technical Review Issues in Level 1 (At Power) PRA

- Common Cause Failure (CCF) Probabilities
- Modeling of I&C Systems
- PRA Mission Time
- Modeling of Steam Suppression Vacuum Breakers
- Fire-Risk Issues
- PRA Input to the Licensing Basis
- Thermal-Hydraulic Uncertainty and Success Criteria

Key Technical Review Issues in Shutdown PRA

- Large Early Release Frequency Risk
- Role of Operator
- Common Cause Failure of Non-Safety Systems
- Risk Impact of Open Containment

Key Technical Review Issues in Level 2 PRA/Severe Accidents

- Basemat-Internal Melt Arrest and Coolability (BiMAC) System
- Vacuum Breakers