DEPARTMENT OF THE ARMY
HEADQUARTERS UNITED STATES ARMY MATERIEL COMMAND
5001 EISENHOWER AVE., ALEXANDRIA, VA. 22333

AMCSF-P/75-0077

3 November 1975

Director
Nuclear Material Safety and Safeguards
US Nuclear Regulatory Commisssion
ATTN: Materials Branch
Washington, DC 20555

Gentlemen:

Forwarded is an application by US Army Electronics Command, Fort Monmouth, New Jersey, to renew and amend Byproduct Material License Number 29-01022-06 in its entirety. Ionizing Radiation Control, ECOMR 385-9, has been revised and drawings and descriptions of facilities have been updated.

Please acknowledge receipt of correspondence. Enclosed is NRC Form 46 (1-75) Reply Card.

Sincerely,

DARWIN N. TARAS
Chief, Health Physics
Safety Office

1 Incl
As stated

59113

Cy Furn:
HQDA (DASG-HCH-E) WASH DC 20310
Director, US Army Materiel Command Field Safety Activity, Charlestown, IN 47111

HH/8

Form AEC-313
(2-73)
10 CFR 30

UNITED STATES ATOMIC ENERGY COMMISSION

APPLICATION FOR BYPRODUCT MATERIAL LICENSE

Form approved
Budget Bureau No. 38-R0027

INSTRUCTIONS.—Complete Items 1 through 16 if this is an initial application or an application for renewal of a license. Information contained in previous applications filed with the Commission with respect to Items 8 through 15 may be incorporated by reference provided *references are clear and specific.* Use supplemental sheets where necessary. Item 16 must be completed on all applications. Mail two copies to: U.S. Atomic Energy Commission, Washington, D.C., 20545, Attention: Materials Branch, Directorate of Licensing. Upon approval of this application, the applicant will receive an AEC Byproduct Material License. An AEC Byproduct Material License is issued in accordance with the general requirements contained in Title 10, Code of Federal Regulations, Part 30, and the Licensee is subject to Title 10, Code of Federal Regulations, Part 20, and the license fee provisions of Title 10, Code of Federal Regulations, Part 170. The license fee category should be stated in Item 16 and the appropriate fee enclosed. (See Note in Instruction Sheet).

1. (a) NAME AND STREET ADDRESS OF APPLICANT. *(Institution, firm, hospital person, etc. Include ZIP Code and telephone number.)*

Department of the Army
US Army Electronics Command
Fort Monmouth, New Jersey 07703

(b) STREET ADDRESS(ES) AT WHICH BYPRODUCT MATERIAL WILL BE USED. *(If different from 1(a). Include ZIP Code.)*

See Supplement A

2. DEPARTMENT TO USE BYPRODUCT MATERIAL

Organizations which are part of the Directorate of Research, Development and Engineering, Electronics Command, DA

3. PREVIOUS LICENSE NUMBER(S). *(If this is an application for renewal of a license, please indicate and give number.)*

Renew and amend BPL 29-01022-06 in its entirety.

4. INDIVIDUAL USER(S). *(Name and title of individual(s) who will use or directly supervise use of byproduct material. Give training and experience in Items 8 and 9.)*

See Supplement C

Committee? manufacturer? Transducer?

5. RADIATION PROTECTION OFFICER. *(Name of person designated as radiation protection officer if other than individual user. Attach resume of his training and experience as in Items 8 and 9.)*

Stanley B. Potter, RPO
Charles F. Pullen, Alternate RPO
(See Supplement F for training and experience)

6. (a) BYPRODUCT MATERIAL. *(Elements and mass number of each.)*

A. Any byproduct material with atomic nos 3-83 inclusive

B. Americium 241

C. Americium 241

D. Cesium 137

(b) CHEMICAL AND/OR PHYSICAL FORM AND MAXIMUM NUMBER OF MILLICURIES OF EACH CHEMICAL AND/OR PHYSICAL FORM THAT YOU WILL POSSESS AT ANY ONE TIME. *(If sealed source(s), also state name of manufacturer, model number, number of sources and maximum activity per source.)*

A. Any form - 1000 millicuries of each radionuclide having an atomic number 3 through 83 inclusive.

B. Any form 10 millicuries.

C. Sealed sources, 5,000 millicuries.

D. Sealed sources, 835,000 millicuries total, no single source to exceed 220,000 millicuries. Both ORNL and commercial sources may be used, New commercial sources to be sealed in metal capsules by welding. (See Fig D-1, page D-2 for an example)

(Continued in Supplement D)

7. DESCRIBE PURPOSE FOR WHICH BYPRODUCT MATERIAL WILL BE USED. *(If byproduct material is for "human use," supplement A (Form AEC-313a) must be completed in lieu of this item. If byproduct material is in the form of a sealed source, include the make and model number of the storage container and/or device in which the source will be stored and/or used.)*

Byproduct material will be used in research, development and testing programs, including calibration and operational checks of instruments, and as instructional aids. ~~(See Supplement E for additional information.)~~

59113

(Continued on reverse side)

TRAINING AND EXPERIENCE OF EACH INDIVIDUAL NAMED IN ITEM 4 *(Use supplemental sheets if necessary)*

8. TYPE OF TRAINING	WHERE TRAINED	DURATION OF TRAINING	ON THE JOB (Circle answer)	FORMAL COURSE (Circle answer)
a. Principles and practices of radiation protection	See Supplement F		Yes No	Yes No
b. Radioactivity measurement standardization and monitoring techniques and instruments			Yes No	Yes No
c. Mathematics and calculations basic to the use and measurement of radioactivity			Yes No	Yes No
d. Biological effects of radiation			Yes No	Yes No

9. EXPERIENCE WITH RADIATION. *(Actual use of radioisotopes or equivalent experience.)*

ISOTOPE	MAXIMUM AMOUNT	WHERE EXPERIENCE WAS GAINED	DURATION OF EXPERIENCE	TYPE OF USE
		See Supplement F		

10. RADIATION DETECTION INSTRUMENTS. *(Use supplemental sheets if necessary.)*

TYPE OF INSTRUMENTS *(Include make and model number of each)*	NUMBER AVAILABLE	RADIATION DETECTED	SENSITIVITY RANGE *(mr/hr)*	WINDOW THICKNESS *(mg/cm²)*	USE *(Monitoring, surveying, measuring)*
See Supplement G					

11. METHOD, FREQUENCY, AND STANDARDS USED IN CALIBRATING INSTRUMENTS LISTED ABOVE.

See Supplement H

12. FILM BADGES, DOSIMETERS, AND BIO-ASSAY PROCEDURES USED. *(For film badges, specify method of calibrating and processing, or name of supplier.)*

See Supplement B

INFORMATION TO BE SUBMITTED ON ADDITIONAL SHEETS IN DUPLICATE

13. FACILITIES AND EQUIPMENT. Describe laboratory facilities and remote handling equipment, storage containers, shielding, fume hoods, etc. Explanatory sketch of facility is attached. *(Circle answer)* (Yes) No See Supplement I

14. RADIATION PROTECTION PROGRAM. Describe the radiation protection program including control measures. If application covers sealed sources, submit leak testing procedures where applicable, name, training, and experience of person to perform leak tests, and arrangements for performing initial radiation survey, servicing, maintenance and repair of the source. See Supplement J

15. WASTE DISPOSAL. If a commercial waste disposal service is employed, specify name of company. Otherwise, submit detailed description of methods which will be used for disposing of radioactive wastes and estimates of the type and amount of activity involved. Disposal is in accordance with AR 755-15.

CERTIFICATE (This item must be completed by applicant)

16. THE APPLICANT AND ANY OFFICIAL EXECUTING THIS CERTIFICATE ON BEHALF OF THE APPLICANT NAMED IN ITEM 1, CERTIFY THAT THIS APPLICATION IS PREPARED IN CONFORMITY WITH TITLE 10, CODE OF FEDERAL REGULATIONS, PART 30, AND THAT ALL INFORMATION CONTAINED HEREIN, INCLUDING ANY SUPPLEMENTS ATTACHED HERETO, IS TRUE AND CORRECT TO THE BEST OF OUR KNOWLEDGE AND BELIEF.

US Army Electronics Command, DA
Applicant named in item 1

License Fee Category $ _____

Fee Enclosed $ _____

By: Walter S. McAfee
WALTER S McAFEE
CG's Representative on Ionizing
Radiation Control Committee
Title of certifying official

Date 4 Sep 75

WARNING.—18 U. S. C., Section 1001; Act of June 25, 1948; 62 Stat. 749; makes it a criminal offense to make a willfully false statement or representation to any department or agency of the United States as to any matter within its jurisdiction.

TABLE OF CONTENTS

5963

TABLE OF CONTENTS

SUPPLEMENT A

LOCATIONS WHERE BYPRODUCT MATERIAL WILL BE USED

59113

SUPPLEMENT A

LOCATIONS WHERE BYPRODUCT MATERIAL WILL BE USED.

1. Fort Monmouth is made up of a number of sub-posts or areas located in Monmouth County, New Jersey. Byproduct material is primarily used in the Evans Area; however, occasionally it is used in other areas.

2. The following areas and locatinns combine to form Fort Monmouth.

   a. US Army Electronics Command Headquarters Bldg - Tinton Avenue and Garden State Parkway, New Shrewsbury, NJ.

   b. Charles Wood Area - Intersection of Tinton Avenue and Hope Road, Eatontown, NJ.

   c. Fort Monmouth (Main Post) - Entrance at intersection of Tinton Ave and NJ Hwy 35, Eatontown, NJ.

   d. Klystronics Bldg - Mid-Monmouth Industrial Park, intersection of Hope Road and NJ Hwy 36.

   e. A portion of Electronic Associates, Inc., - 185 Monmouth Parkway, Eatontown, NJ.

   f. Wayside Area Earle Ammunition Depot - Wayside Road and Wyckoff Road, Wayside, NJ.

   g. Oakhurst Station (Tower) - Wilson Avenue off NJ Hwy 35, Oakhurst, NJ.

   h. Evans Area - Intersection of Marconi Road and Brighton Avenue, Neptune, NJ.

3. Fig A-1 shows the relative locations of the above areas.

4. In addition to the above areas, sealed sources containing not more than 220 curies may be used at Gateway National Park, NJ; Lakehurst Naval Air Station, NJ; Tobyhanna Army Depot, Tobyhanna, Pa.; Fort Huachuca, Ariz.; Fort Hood, Texas; and the Nevada Test Site.

5. Two target replenishing cartridges containing not more than 90 curies each of hydrogen 3 and one tritiated accelerator target containing not more than 20 curies to be used in the Kaman Nuclear Corp Model A-1001, Neutron Generator at Gateway National Park, NJ.

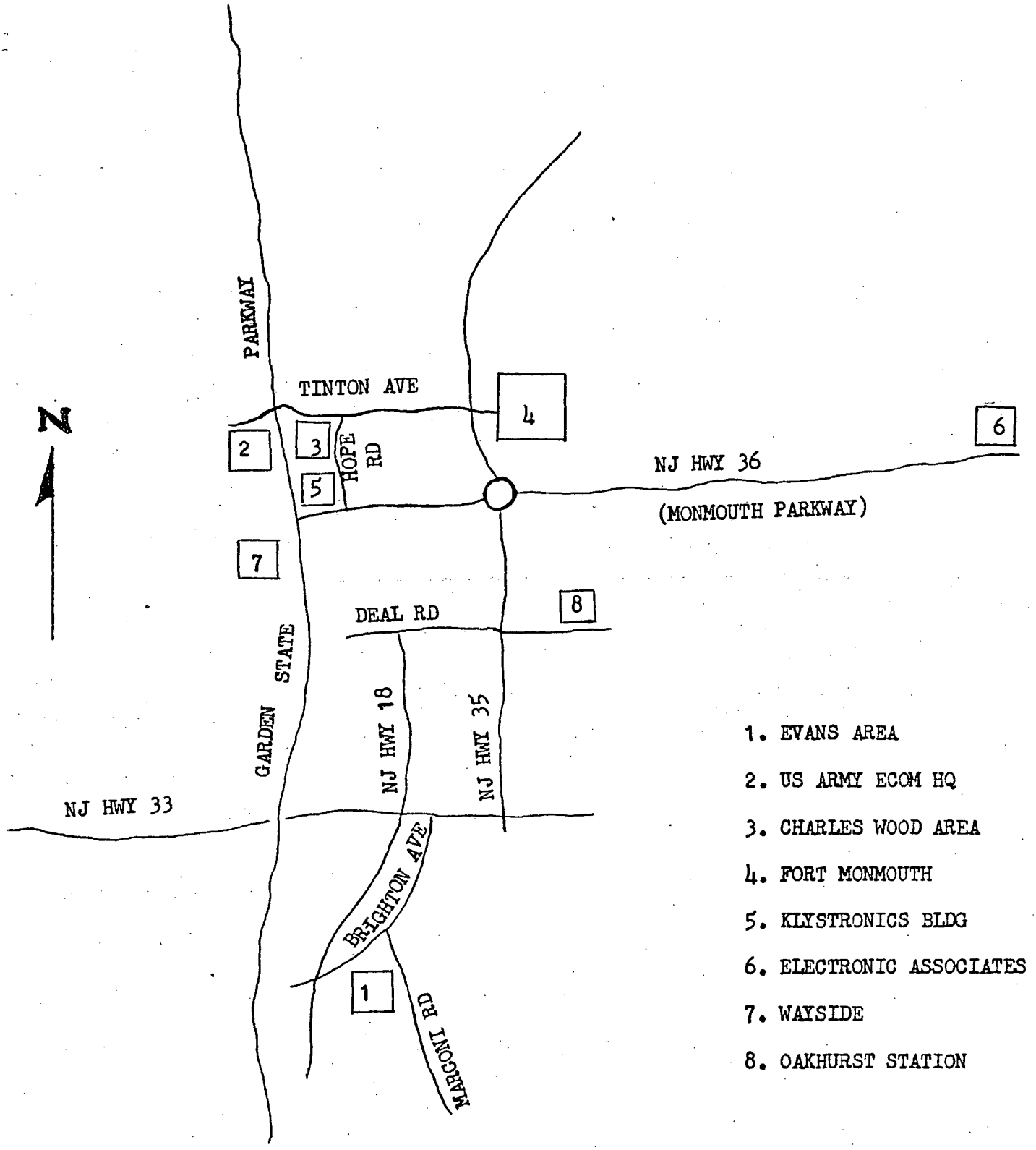

FIG. A-1 FORT MONMOUTH AREA

SUPPLEMENT B

FILM BADGES, DOSIMETERS AND BIO-ASSAY PROCEDURES USED

SUPPLEMENT B

FILM BADGES, DOSIMETERS AND BIO-ASSAY PROCEDURES USED

1. Lexington-Bluegrass Army Depot Film Badge Service is used for personnel monitoring on a monthly basis for radiation workers and on an as needed basis for visitors.

2. Quartz fiber dosimeters are issued on an as needed basis to visitors of radiation areas. Dosimeters of this type are worn by both visitors and radiation workers in high radiation areas.

3. Individuals working in high radiation areas may also use Atomic Accessories Personal Radiation Monitors (chirpees) or other similar type devices.

4. Bio-Assay services are available through the Army Surgeon General as required.

5. ECOM radiation workers take their film badges with them when they will be exposed to radiation at remote locations. If their stay extends beyond a film badge change date fresh film is sent to them and they in turn mail the exposed film back to Fort Monmouth.

SUPPLEMENT C

INDIVIDUAL USERS

SUPPLEMENT C

INDIVIDUAL USERS

1. The use of radioactive material covered by this license shall be limited to:

   a. The RD&E RPO, Alternate RPO, and Technical Staff of the RD&E RPO.

   b. Personnel to Perform Leak Tests.

   c. Individuals approved by the ECOM Ionizing Radiation Control (IRC) Committee. Criteria and procedures for approval are stated in ECOM Regulation 385-9 which is attached as Incl 1 to Suppl J.

   d. Individuals working under the direct supervision of an RD&E employee approved by the IRC Committee to directly supervise the individual's work with the radioactive material involved.

Note: Direct supervision means that the supervisor is in a physical location where he can see the individuals being supervised or he is in a nearby area where he can hear a call or signal from the individuals and be able to reach the location where the individuals are working within a few moments.

2. See Supplement F for:

   a. List of individuals who serve as:

      (1) RPO, Alternate RPO, and Technical Staff of RPO

      (2) Personnel to perform leak tests.

   b. Training and Experience of individuals who serve in the above capacities.

SUPPLEMENT D

BYPRODUCT MATERIAL AND CHEMICAL AND/OR PHYSICAL FORM AND MAXIMUM NUMBER OF MILLICURIES

SUPPLEMENT D

BYPRODUCT MATERIAL AND CHEMICAL AND/OR PHYSICAL FORM AND MAXIMUM NUMBER OF MILLICURIES

Continuation of Items 6(a) and 6(b), Form AEC-313.

6(a) Byproduct Material	6(b) Chemical and/or Physical Form and Maximum Number of Millicuries
E. Cobalt 60	E. Sealed Sources, 440,000 millicuries total, no single source to exceed 200,000 millicuries. ORNL and commercial sources. Commercial sources double encapsulated. Capsules sealed by welding. First capsule sealed and leak tested prior to second encapsulation.
F. Hydrogen 3	F. Gas in acceleration targets (such as tritiated titanium), 200,000 millicuries total, no single target to have more than 20,000 millicuries.
G. Hydrogen 3	G. Gas, 300,000 millicuries total contained in three or more Kaman Nuclear Model R Replenishing Cartridges. (See Fig D-2).
H. Hydrogen 3	H. Gas, 75,500 millicuries total, contained in hermetically sealed glass capsules. No single source to exceed 1500 millicuries. These capsules are self powered light sources such as Conrad Precision Industries, Inc. "Betalight" type RO2/G/1300 (See Fig. D-3) or US Radium Corp Model LAB-706 Sealed Light Source (See Fig D-4).
I. Polonium 210	I. 10 millicuries in any form.
J. Polonium 210	J. Two sealed sources, 20,000 millicuries total, no single source to exceed 10,000 millicuries.
K. Promethium 147	K. Four sealed sources (self-powered light sources), 1200 millicuries total. No single source to exceed 300 millicuries. Minnesota Mining & Manufacturing Co P.O. No. DAAB07-69 MF333.
L. Strontium 90	L. 1600.4 millicuries total; contained in 40 sealed sources with a maximum of 40 millicuries per source and 10 sealed sources with a maximum of 0.04 millicuries per source. The sources are Minnesota Mining & Manufacturing Co. type 3F1G or equivalent, as per ECOM drawing SM-B-509057. Sources made for use in Army Radiac Calibrator AN/UDM-2. Source details in application for AEC license BPL 29-01022-08 issued to US Army ECOM.

6(a) Byproduct Material	6(b), Chemical and/or Physical Form and Maximum Number of Millicuries
M. Strontium 90	M. Four Sealed Sources of 25 millicuries each. Sources from Army Radiac Calibrator TS-784-A. Details shown in application for AEC license BPL 29-01022-09 issued to US Army ECOM.

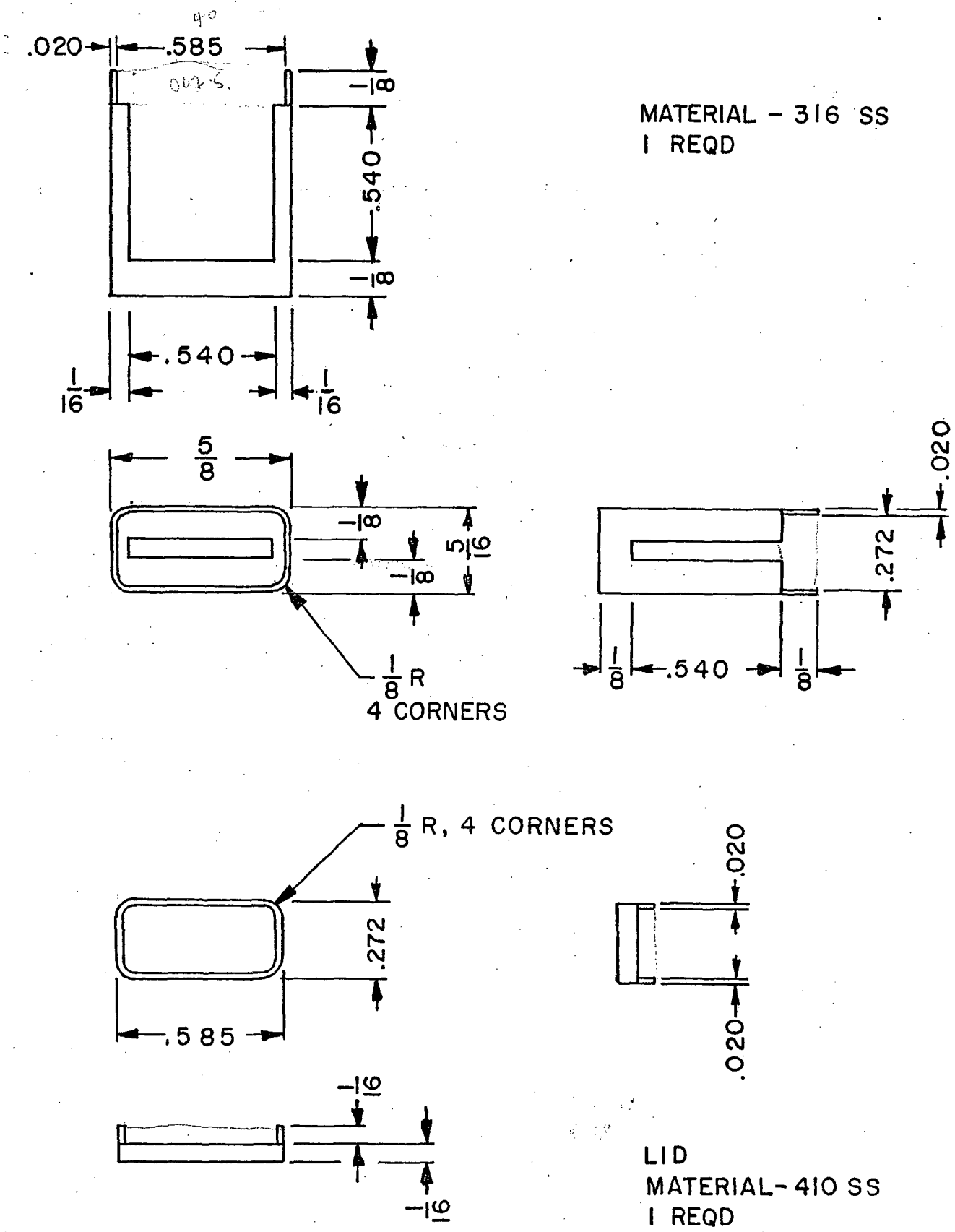

FIG. D-1 – ORNL CAPSULE FOR 50 CURIES OF CESIUM 137

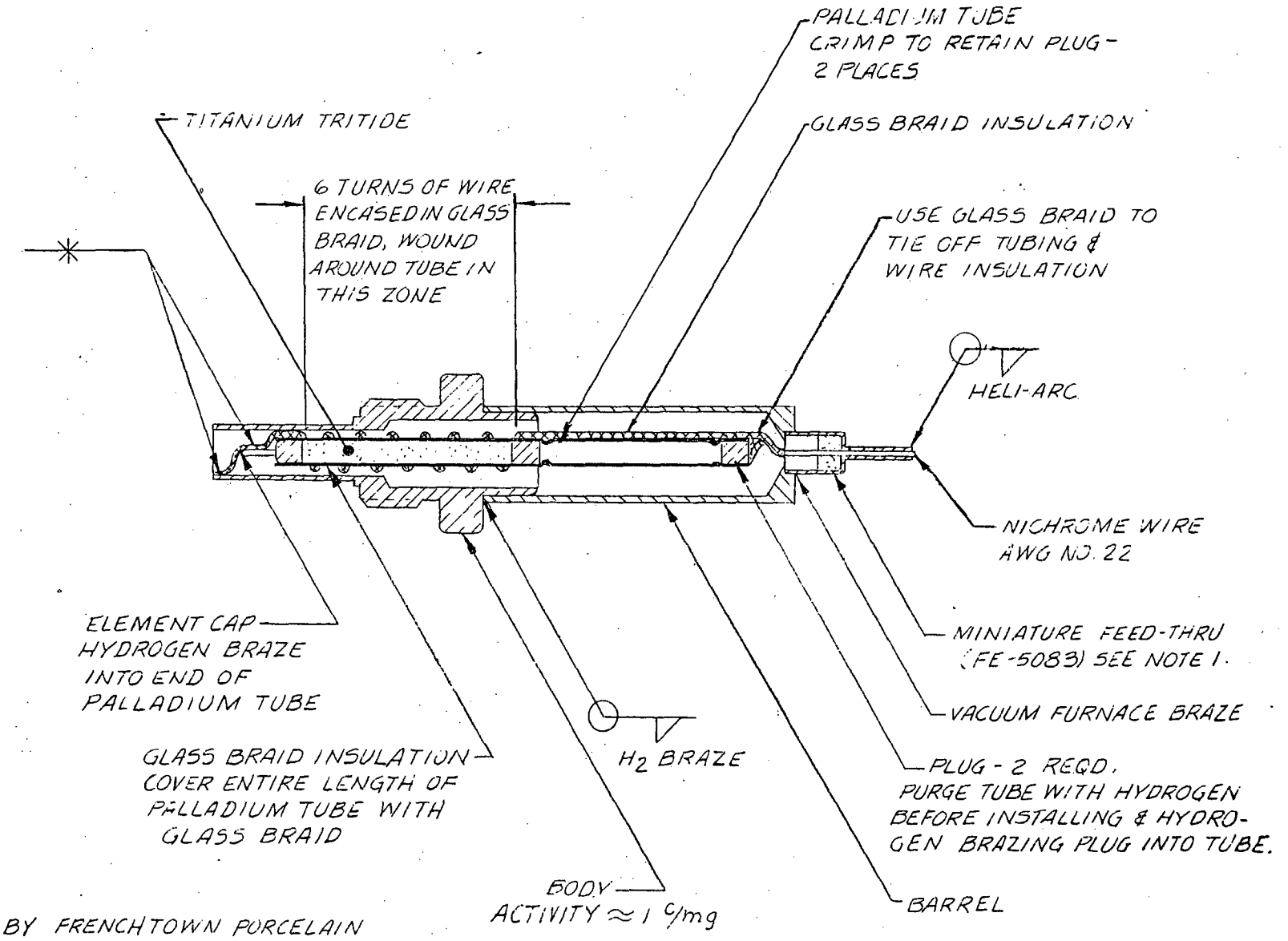

NOTE:
1. SUPPLIED BY FRENCHTOWN PORCELAIN CO., FRENCHTOWN, N.J.
2. ALL HYDROGEN & VACUUM FURNACE BRAZE SUPPLIED AS "CUSIL" AG-CU ALLOY BY WESTERN GOLD & PLATINUM CO., BELMONT, CALIF.

FIG. D-2 TARGET REPLENISHING CARTRIDGE, KAMAN NUCLEAR MODEL R

TYPE R RECTANGULAR TUBE

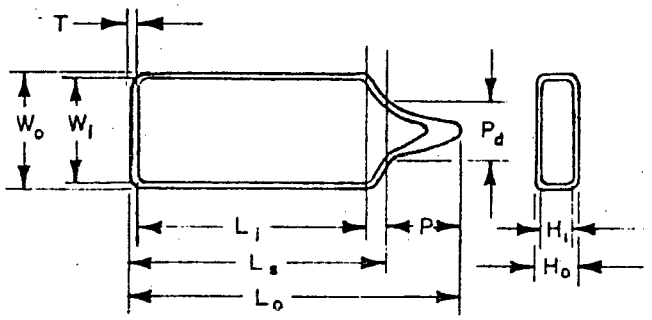

TYPE NO.	Lo	Ls	Li	Wo	Wi	Ho	Hi	T	P	Pd	STANDARD BRIGHTNESS	MAXIMUM BRIGHTNESS
R01/G/250	15.0	11.5	8.0	10.0	8.0	5.0	3.0	1.5	5.0	-	250	750
*R02/G/380	±1.5	±0.5	-	±0.5	±0.1	±0.5	±0.1	-	-	-	380	1300
R03/G/290	23.0	19.5	16.0	10.0	8.0	5.0	3.0	1.5	5.0	-	290	NA
R04/G/420	±1.5	±0.5	-	±0.5	±0.1	±0.5	±0.1	-	-	-	420	NA
R05/G/290	29.0	25.5	22.0	10.0	8.0	5.0	3.0	1.5	5.0	-	290	NA
R06/G/425	±1.5	±0.5	-	±0.5	±0.1	±0.5	±0.1	-	-	-	425	NA
R09/G/260	21.0	15.0	12.5	15.0	13.0	4.5	2.6	2.0	6.0	-	260	NA
R10/G/425	±1.5	±0.5	-	±0.5	±0.1	±0.5	±0.1	-	-	-	425	NA

* TUBE ORDERED TYPE R02/G/1300 SAME AS TYPE R02/G/380 SHOWN ABOVE WITH FOLLOWING EXCEPTIONS: (1) SEALED OFF ON SIDE INSTEAD OF AT END. (2) TUBE IS PRESSURIZED.

TYPE S SPHERE

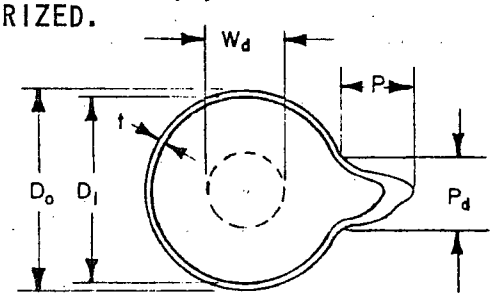

TYPE NO.	Do	Di	P	Pd	t	Wd	STANDARD BRIGHTNESS	MAXIMUM BRIGHTNESS
S01/G/210	8.0 ±0.2	6.0 ±0.25	5.0	4.0	1.0 ±0.25	-	210	750
S03/G/190	7.0 ±0.2	-	5.0	4.0	1.0 ±0.25	-	190	450
S06/G/700	7.0 ±0.2	-	5.0	4.0	1.0 ±0.25	3.5 ±0.25	700	1300
S07/G/350	11.0 ±0.2	-	6.0	5.0	1.0 ±0.25	-	350	NA
S10/G/1000	11.0 ±0.2	-	6.0	5.0	1.0 ±0.25	6.0 ±0.25	1000	NA
A12/G/900	12.0 ±0.2	10.0 ±0.5	6.0	5.0	0.75 ±0.25	10.0 ±0.5	900	NA

FIG. D-3 EXAMPLES– SELF POWERED LIGHT SOURCES

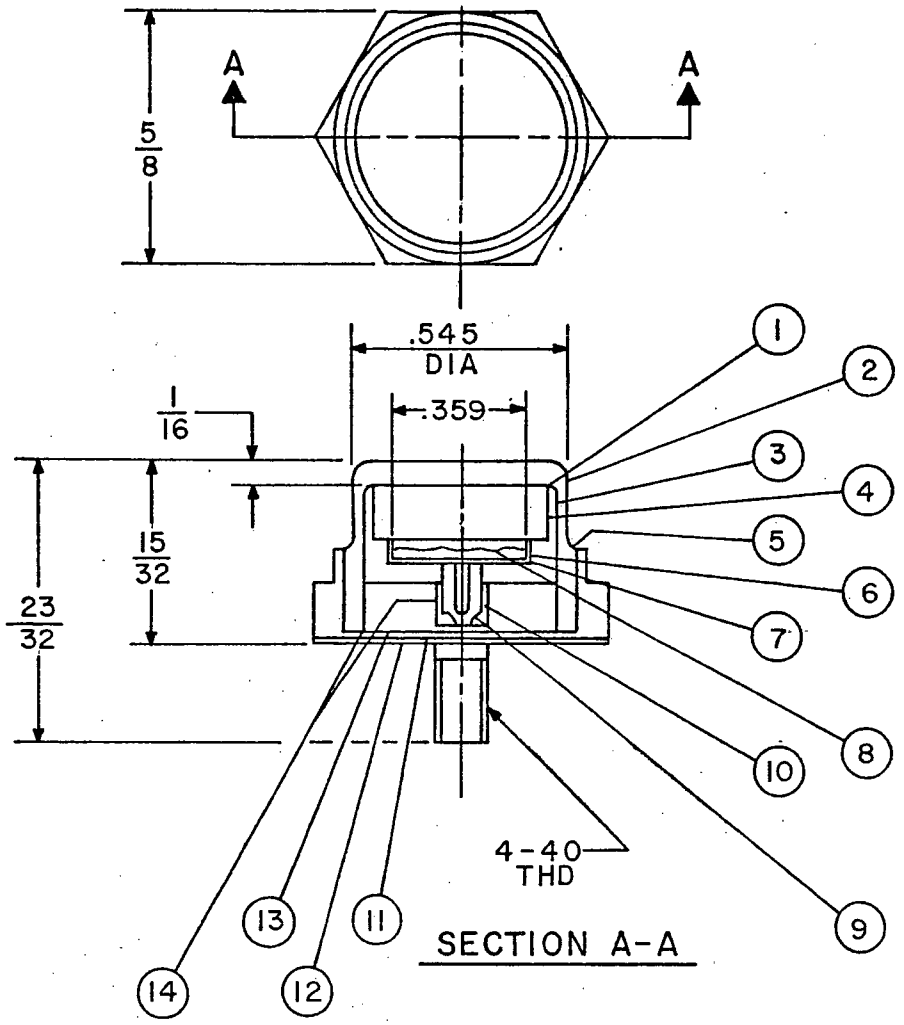

LEGEND

1. GLASS–METAL SOLDER SEAL
2. OUTER HOUSING–PLEXIGLAS
3. INNER HOUSING–C.R.S. (CAD. PLATED)
4. CERIUM GLASS WINDOW
5. CONTINUOUS EPOXY RESIN SEAL
6. ACTIVE GAS
7. ALUMINUM CUP
8. PHOSPHOR BED
9. FILLING TUBE–CRIMP & SOLDER DIP
10. SILVER SOLDER–1145-F
11. HOUSING ALUMINUM–GOLD ANODIZE
12. LABEL DATA
13. BACKPLATE–ALUMINUM
14. CONTINUOUS EPOXY RESIN SEALS

LABEL DATA:

1. CAUTION RADIOACTIVE MATL
2. RADIATION SYMBOL
3. ISOTOPE SYMBOL & CONTENT
4. SEALING DATE

SAFE OPERATING TEMP.
180°F (MAX)

FIG. D-4 MODEL LAB-706 SEALED LIGHT SOURCE

SUPPLEMENT E

I. PURPOSE FOR WHICH BYPRODUCT MATERIAL WILL BE USED.

II. STORAGE CONTAINERS FOR SEALED SOURCES.

SUPPLEMENT E

A. PURPOSE FOR WHICH BYPRODUCT MATERIAL WILL BE USED

1. The following are examples of the main portion of the RD&E research, development and testing programs that utilize radioisotopes.

a. Radiation detection instrument research and development.

b. Radiation effects on electronic parts and components.

c. Radiation power sources.

d. Self powered light sources.

e. Basic research.

2. A large group is concerned with the design and development of radiation detection instruments, both rate meters and integrating dosimeters. These instruments range from the ones that measure background to those that measure intensities such as those found in the fireball of an atomic explosion. The instruments may be sensitive to gamma, beta, alpha, thermal or fast neutrons, or combinations of these. It is this program that requires most of the high intensity sealed sources and accelerators. New detectors are also frequently irradiated at reactor facilities. This results in radioactivity in the instruments. These instruments must be brought back to RD&E for evaluation and further testing, and since it would be impossible to predict the exact isotopes that result, a broad license is necessary.

3. The groups devoted to research and development of electronic parts and components devote considerable effort irradiating parts and components with various sources of nuclear radiation, both in the laboratory and at other installations. They determine the effects of nuclear radiation on new parts and develop radiation resistant parts. As mentioned above, the nature of induced activity is not known and time spent to determine it would make experiments useless. A broad license is therefore required.

4. The use of isotopes in basic research is two-fold. Small amounts of radioactive material are needed in experiments requiring high energy ions such as alpha particles and fission fragments while other isotopes are used in experiments involving nuclear decay schemes.

5. Some byproduct material may be used in training programs for radiation workers, and emergency and security personnel that may encounter radiological hazards in the performance of their duties.

B. STORAGE CONTAINERS FOR SEALED SOURCES.

1. A variety of small lead containers are available for storing and moving small sources.

2. The following are some of the special containers that are used for large sources.

a. The Radiac Calibrator Set AN/UDM-1 is designed for 10 curies of Cobalt 60. It is manually operated. When in use the radiation from it is collimated in one direction. The set was designed for the Department of the Navy, Bureau of Ships, and calibrated by NBS. Operating procedure is described in the NBS manual accompanying the set.

b. The Radiac Calibrator Set AN/UDM-1A was designed for 125 curies of Cesium 137. It is manually operated. When in use the radiation from it is collimated in one direction. It was designed for the Navy and calibrated by NBS. The technical manual that comes with the set and describes the system and gives operating instructions is Navships 93204.

c. The Radiac Calibrator Set AN/UDM-2 is designed for a total of up to 160.04 millicuries of Strontium 90. There are two calibrators in each set. One for ratemeters and one for pocket dosimeters. The one for ratemeters is designed for one source of up to 40 millicuries, while the one for dosimeters will house three 40 millicuries sources and one 0.04 millicurie source. This calibrator set was designed by RD&E for use throughout the Army. Detailed information is given in the application for AEC BPL 29-01022-08.

d. Radionics Inc. source container P60-30-2 is designed for 30 curies of Cobalt 60.

e. Radiation Backscattering Devices. This device was made by ORNL. It contains a Cesium 137 sealed source (See Fig D-1). The portion of the device that holds the source and collimates the beam (See Figs E-1 and E-2) is made of tungsten alloy. A lead cap is used to cover the end of the collimating slot when the device is not in use. The lead cap is held in place by machine screws. Mr. Frank Dyer and Mr. L Bates of the ORNL Analytical Chemistry Division made an initial survey of the device. The highest radiation level at one foot from the center of the source was reported to be 30 mR/hr.

f. Storage containers, and devices in which sources will be stored and used are designed to meet AEC and DOT thermal and/or heating tests for shipping containers shall be used for sources made or obtained after the date of this application. The radiation intensity 6 inches from any exterior surface of a new storage container will not exceed 50 mR/hr, or 10 mR/hr at one meter from any exterior surface.

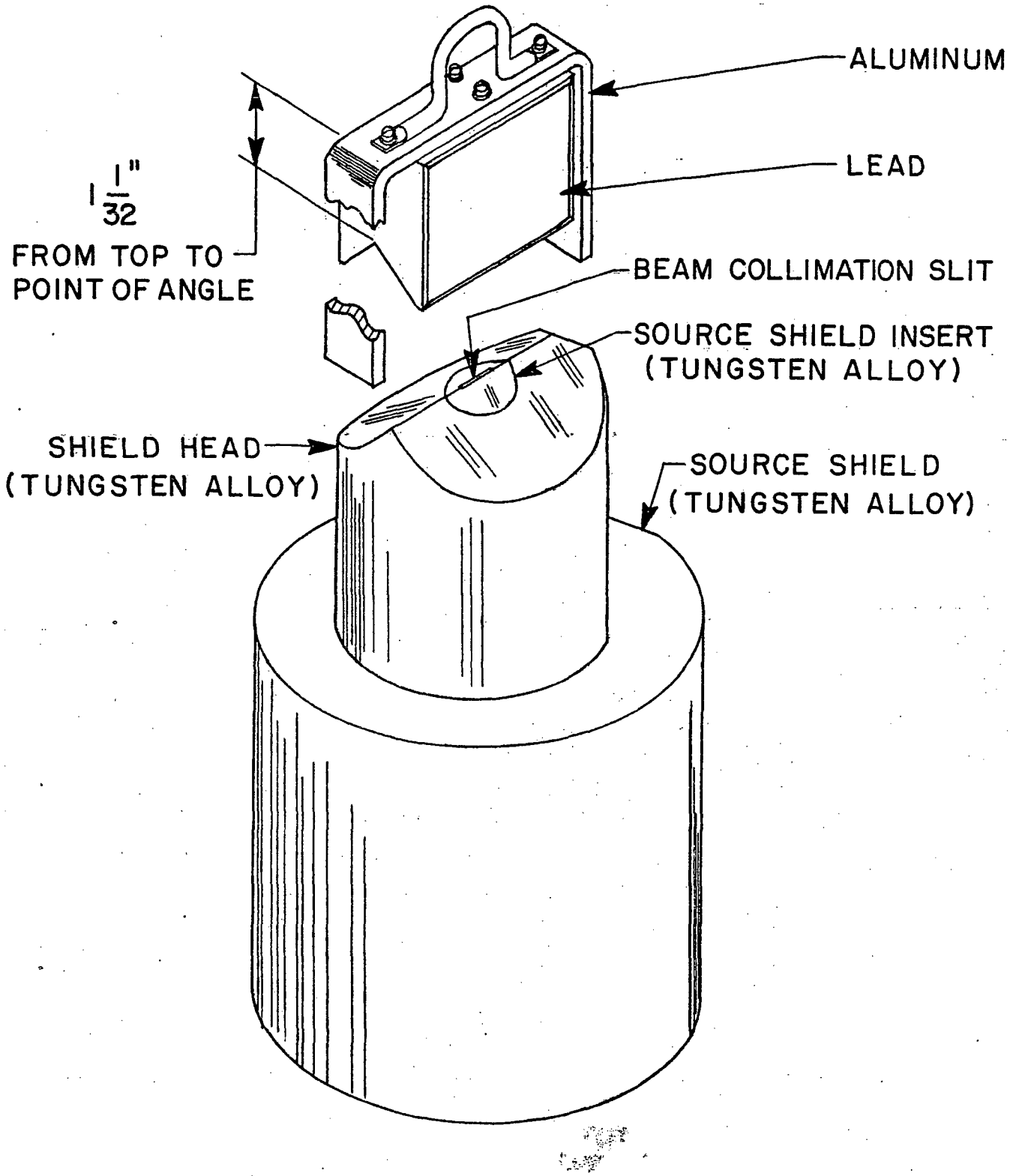

FIG. E-2 BACKSCATTERING DEVICE - ISOMETRIC DRAWING OF SOURCE CONTAINER AND COLLIMATOR

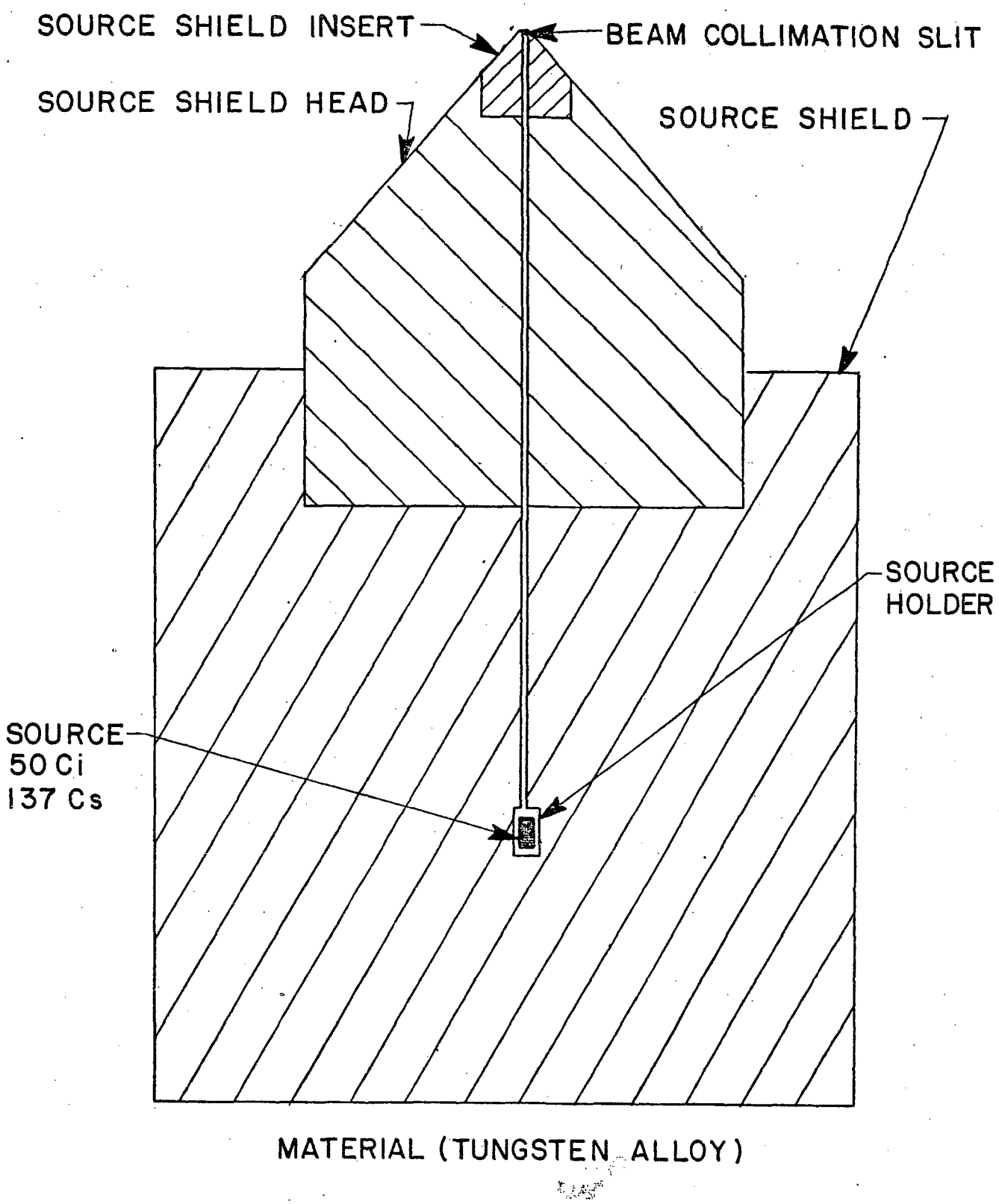

FIG. E-3 BACKSCATTERING DEVICE - CROSS SECTION VIEW OF SOURCE CONTAINER AND COLLIMATOR

SUPPLEMENT F

TRAINING AND EXPERIENCE

SUPPLEMENT F

TRAINING AND EXPERIENCE

1. RD&E RPO, Alternate RPO and Technical Staff of RPO:

   a. Mr. Stanley B. Potter, RPO for RD&E

   b. Mr. Charles F. Pullen, Alternate RPO for RD&E

   c. Mr. Bartholomew F. Savignac, Health Physics Technician

2. Personnel to perform leak tests:

   a. Mr. Joseph Crotchfelt

   b. Mr. Richard Rast

   c. Personnel listed in para 1 above.

3. Training and experience of the above personnel are described on the following pages.

Resume of Training and Experience
of Stanley B. Potter RPO

1. Educational background:

Ex 4

Colorado State University	4 yrs		BS, Physics
Chemical Corps School	2 wks	1964	Compl Radiation Safety Course
Naval Postgraduate School	2 yrs	1969	Compl Nuclear (Effects) Engineering Curriculum
Nuclear Weapons School	8 wks	1969	Compl SONAC, NET OPS, NHTC courses

2. Vocational experience with radiation:

1961-1964 At Nuclear Defense Laboratory, Edgewood Arsenal, Md as research physicist.

1964-1967 With US Army in Germany, as Radiation Protection Officer for the 32d Army Air Defense Command.

1969-1972 With Defense Nuclear Agency in Albuquerque, NM, as Chief, Radiation Safety Support Division, Nuclear Weapons School.

1972 With Pan American Airways, Environmental Health contractor for NASA and the Air Force at Cape Kennedy, Florida, as Chief, Health Physics Division.

1972-1974 With US Army Electronics Command, Fort Monmouth, NJ as Chief, Health Physics Division of the Safety Office.

1974-Pres US Army Electronics Command, Fort Monmouth, NJ, as Chief RD&E Radiological Safety Office.

3. Formal training in radiation:

a. Principles and practices of radiation protection.

Where Trained	Duration of Training
Colorado State University	24 weeks
Chemical Corps School	2 weeks
Naval Postgraduate School	2 years
Nuclear Weapons School	8 weeks

b. Radioactivity measurement, standardization, and monitoring techniques and instruments.

Where Trained	Duration of Training
Colorado State University	12 weeks
Chemical Corps School	2 weeks
Naval Postgraduate School	36 weeks
Nuclear Weapons School	8 weeks

c. Mathmatics and calculations basic to the use and measurement of radioactivity.

Where Trained	Duration of Training
Colorado State University	24 weeks
Chemical Corps School	2 weeks
Naval Postgraduate School	2 years
Nuclear Weapons School	8 weeks

d. Biological effects of radiation.

Where Trained	Duration of Training
Chemical Corps School	2 weeks
Naval Postgraduate School	36 weeks
Nuclear Weapons School	2 weeks

4. On-The-Job Training in radiation.

a. Principles and practices of radiation protection.

Where Trained	Duration of Training
Nuclear Defense Laboratory	3 yrs - 1961-1964
Germany	3 yrs - 1964-1967
Albuquerque, NM	3 yrs - 1969-1972
Cape Kennedy, Fla	1 mo - 1972
Fort Monmouth, NJ	1972-Present

b. Radioactivity measurement, standardization, and monitoring techniques and instruments.

Where Trained	Duration of Training
Nuclear Defense Laboratory	3 yrs - 1961-1964
Germany	3 yrs - 1964-1967
Albuquerque, N M	3 yrs - 1969-1972
Cape Kennedy, Fla	1 mo - 1972
Fort Monmouth, NJ	1972-Present

c. Mathmatics and calculations basic to the use and measurement of radioactivity.

Where Trained	Duration of Training
Nuclear Defense Laboratory	3 yrs - 1961-1964
Germany	3 yrs - 1964-1967
Albuquerque, New Mexico	3 yrs - 1969-1972
Cape Kennedy, Florida	1 mo - 1972
Fort Monmouth, New Jersey	1972-Present

5. Experience with radioisotopes.

Isotope	Maximum Activity	Place of Experience	Duration of Experience
Ra^{226}	Less than 10 curies	Colorado State University	3 mo
		Naval Postgraduate School	3 Mo
		Fort Monmouth, NJ	3 yrs
Co^{60}	millicuries	Colorado State University	3 mo
	curies	Chemical Corps School	6 mo
	curies	Naval Postgraduate School	3 mo
	hundreds of curies	Edgewood, Maryland	2 yrs
	curies	Albuquerque, NM	3 yrs
	kilocuries	Fort Monmouth, NJ	3 yrs
Am^{241}	curies	Albuquerque, N M	3 yrs
		Fort Monmouth, NJ	3 yrs
Pr^{147}	hundreds of curies	Cape Kennedy, Fla	1 mo
Pu^{238}	Kilocuries	Albuquerque, NM	3 yrs
		Cape Kennedy, Fla	1 mo
		Fort Monmouth, NJ	3 yrs
Pu^{239}	curies	Albuquerque, NM	3 yrs
Co^{57}	millicuries	Albuquerque, NM	3 yrs
		Fort Monmouth, NJ	3 yrs
Th^{232}	curies	Albuquerque, NM	3 yrs
	millicuries	Fort Monmouth, NJ	3 yrs
Th^{229}	curies	Edgewood, Maryland	3 yrs
Tritium	hundreds of curies	Edgewood, Maryland	3 yrs
		Albuquerque, NM	3 yrs
		Fort Monmouth, NJ	3 yrs
I^{131}	millicuries	Edgewood, Md	1 yr
		Naval Postgraduate School	1 yr
Po-Be	Curies	Edgewood, Maryland	3 yrs
Pu-Be	Curies	Edgewood, Maryland	3 yrs
Ir^{192}	hundreds of curies	Cape Kennedy, Fla	1 mo
Kr^{85}	hundreds of curies	Cape Kennedy, Fla	1 mo
U^{238}	curies	Albuquerque, NM	3 yrs
		Fort Monmouth, NJ	3 yrs
Sr^{90} & Y^{90}	millicuries	Germany	3 yrs
		Albuquerque, NM	3 yrs
		Colorado State University	3 mo
		Fort Monmouth, NJ	3 yrs

6. Experience with devices equivalent to that of actual use of radioisotopes.

Device	Place of Experience	Duration
Cockroft Walton Accelerator	Edgewood, Maryland	2 yrs
Betatron	Edgewood, Maryland	1 yr
Van de Graaff Accelerator	Naval Postgraduate School	1 yr
d, T neutron generator	Fort Monmouth, NJ	3 yrs
various X-ray producing devices	Fort Monmouth, NJ	3 yrs

TRAINING & EXPERIENCE WITH RADIATION & RADIOACTIVE MATERIAL
OF

Charles F. Pullen Alt. RPO

TITLE: Research Physicist

POSITION: Supervisor, Radiation Facilities and Secretary of the Ionizing Radiation Committee

EDUCATION: BS Physics, Monmouth College, [ ] Ex6

Courses in Basic Radiological Health and Occupational Radiation Protection given by US Dept of Health, Education & Welfare.

EXPERIENCE: Worked on design, fabrication and encapsulation of isotopes for calibration systems to the 200 curie level. He participated in the research, design and development of radiation detection instruments AN/PRD39 ionization chamber survey meter, Im71/pd, IM70 and Im108 radiacmeter. Designed and fabricated an airplane landing device involving the use of a rotating source producing a vertical columated beam. Actively participated in weapon tests at Nevada Test Site. Operations: Upshot Knothole, Buster Jangle, Plumbob, Smallboy. Radiation measurements, monitoring, and recovery of test equipment from fallout areas. He has had experience in monitoring calibration of radiation detection instruments, wipe tests, and surveying. Since 1967 has acted as health physicist for R&D Laboratories at Fort Monmouth; in charge of radiation facilities and personnel monitoring in USAECOM since 1968.

ACTUAL USE OF RADIOISOTOPES:

Isotopes	Max Amt	Place	Duration	Type of User
C_s^{137}	220 Ci	ECOM	1960-Pres	research
Co^{60}	3500 Ci	"	1960-Pres	"
Si^{90}	1 Ci	"	1955 "	detectors
H^3	90 Ci	"	1965 "	replenisher
Po^{210}	10 Ci	"	1968 "	research
Am^{241}	100 uc	"	1965 "	"
RA^{226}	10.3 mc	"	1965 "	"
RaB	20 mc	"	1960 "	Calibration
Pu^{239}	2 uc	"	1963 "	research
Pm^{147}	300 mc	"	1965 "	"
Kr^{85}	50 mc	"	1965 "	"

TRAINING & EXPERIENCE WITH RADIATION & RADIOACTIVE MATERIAL
OF

BARTHOLOMEW F. SAVIGNAC B.S.

Tech.

POSITION: Radiological Protection Surveyor

TITLE: Health Physics Technician
RD&E Radiological Protection Office

EDUCATION:

a. St. John's Preparatory School, DAnvers, Mass, graduated [ ] Massachusetts College of Pharmacy, 1 year, 1932-33; Rutgers University College and University of Idaho, courses in General Chemistry, General Physics, College Algebra. Ex6

b. 1971 - Formal training in Health Physics at Oak Ridge Associated Universities. Completed 10 weeks course, certificate, April 1971.

c. Some Introduction to the use of counters for radioactive sources at Rutgers University College, 1950. Also, part of a course in Health Physics at the State University of New York at Buffalo, 1970.

EXPERIENCE:

1946 to 1953 US Army Engineers, Manhattan Project as Health and SAfety Inspector at US Government Sampling Plant, Middlesex, NJ., included training in Radiation Control at University of Rochester, New York and at Clinton Laboratories, Oak Ridge, Tennessee; Correspondence with Massachusetts Institute of Technology regarding radium residues and sources, also initiated some personnel dosimetry records and procured instruments until the Atomic Energy Commission, New York Operations Office Laboratories was established. Served as radiation protection officer of the National Bureau of Standards, New Brunswick, NJ Laboratory upon request on several occasions.

1953 to 1967. National Reactor Testing Station. Shift Health Physicist at the Chemical Processing Plant, and the Materials Testing Reactors. Later, Health Physicist for the SPERT Reactors, and for several other reactors in moth balls, i.e., Gas Cooled Reactor, MIL-1, SL-1, AMP, on loan at Experimental Breeder Reactors. On the job training.

Later, 1960, US National Reactor Testing Station Central Facilities, Health Physics Foreman, for a Chemical Engineering Laboratory, metallurgy laboratory, multicurie hot cells, burial grounds, warehouses, radioactive material shipping areas, a radioactive laundry, liquid wastes disposal plants, and other radioactive areas such as large burial grounds.

1969-71 As "Senior Radiophysicist" for the Industrial Hygiene Division, Radiological Health Unit, New York State Dept of Labor. Inspected licensed industrial Installations for compliance throughout the state including fuel processing areas, reactors, firms using sources and devices.

1972 to present. As ECOM Health Physics Technician, received verbal and written instructions in Army Administration Procedures, Army Radiation Control Procedures, terminology; assisted by collecting data for AEC licenses, Dept of the Army Authorizations, and ECOM reports. Some surveys of devices and sources. Assisting in the preparation of applications for Dept of the Army Radioactive Material Authorization or Permit and AEC License.

ACTUAL USE OF RADIOISOTOPES:

Isotopes	Max Amt	Where Experience Gained	Duration	Type of Use
Radium	4-10 microcuries	National Bureau of Standards, New Brunswick,NJ	2 yrs	4-10 uCi calibration sources
Radium & daughters	(300 milligrams per ton) 100 tons	US Government Sampling Plant, Middlesex,NJ	7 yrs	Residues from high grade uranium ore process. Also some 0.1 mCi sources
Natural Uranium	10 Curies or more	US Government Sampling Plant, Middlesex,NJ	7 yrs	High grade ore (60% uranium for process after sampling for assays.
Natural Thorium	1 Curie	" " "	7 yrs	
Plutonium	10 Curies or more	Idaho National Reactor Testing Station	5 yrs	1. Contaminated waste burial 2. Reactor fuel.
Mixed Fission Products	10^6 Curies	Idaho National Reactor Testing Station, Idaho Chemical Processing Plant and Reactor	16 yrs	Fission products stored in tanks or calcined for storage-wastes: material testing reactors. Spent fuel assemblies.
^{235}U ^{233}U	Criticality Amounts	National Reactor Testing Sta-Processing Plant and Reactors	10 yrs	Waste burials, expended reactor cores

^{131}I	10 Curies	National Reactor Testing Station - Chemical Processing Plants & Reactors	2 yrs	Iodine release during nuclear reactor fission breaks. Medical purposes.
^{85}Kr	10 Curies	" "	1 yr	Samples from reactor experiments for analysis.
^{140}Ba ^{140}La	Unknown Millicurie amounts	National Reactor Testing Station - Chemical Processing Plants & Reactors	2 yr	Classified-1955
^{3}H	10 Curies	National Reactor Testing Station, also NY State watch dials manufacturers	6 yrs	Radioactive waste inspected, use in plastic seals and in watch dials.
^{60}Co	.01 to 100 Curies	National Reactor Testing Station and NY State Industrial Hygiene	2 yrs	Use for instruments calibration and industrial radiography
^{57}Co	15 mCi	ECOM, ET&DL	1 mo	Radiation Surveys
Ra D+E	10^{-4} uCi	Idaho Reactor Testing Station	16 yrs	Counter calibration sources
Nearly all types of licensee sources	uCi to Ci	Through most Industrial Areas, NY State	1 3/4 yrs	Variable; Lists too long for this report (from reactors, accelerators produced)

TRAINING AND EXPERIENCE WITH RADIATION & RADIOACTIVE MATERIAL
OF

Joseph H. Crotchfelt JHC

TITLE: Engineering Tech

POSITION: Radiation Tech

EDUCATION: Courses in Basic Radiological Health and Occupational Radiation Protection given by US Dept of Health, Education & Welfare. On the job training at the Pacific Proving Ground and the Nevada Test Site.

EXPERIENCE: Mr. Crotchfelt has been working in the field of radiation measurement, handling and decontamination since 1956. He originally received instruction on the principles and practices of radiation protection, radioactivity measurement and monitoring techniques and instruments, calculations basic to the use and measurement of radiation at the Pacific Proving Ground in 1956. Since then he has had additional instruction and experience on-the-job in these laboratories in radiation measurement, instrument calibration, wipe tests, and decontamination. His experience in PPG & NTS include recovery, radiation measurement, decontamination and instrument calibration. He was responsible for the fabrication and mechanical design changes of the Biosel IM/111, a radiac meter designed to plug into Aircraft or be self-contained with batteries. Designed source holders and loaded same. Maintains, operates and assists in experiments on two (2) million volt Van de Graaff particle accelerator that has a dual capability of electrons or positive ions. Maintains, operates and takes part in experiments on the 3500 Ci Cobalt 60 Facility. Maintains, operates and conducts experiments on the Kaman Model A-1001 Neutron Generator. Is responsible for the quarterly calibration of all Radiac instruments in ET&DL.

ACTUAL USE OF RADIOISOTOPES:

ISOTOPES	MAX AMT	TYPE OF USE
Cs 137	220 Ci	research
Co 60	3500 Ci	research
Si 90	1 Ci	detectors
H3	90 Ci	replenisher
Po 210	10 Ci	research
Am 241	100 uCi	research
Ra 226	10.3 mCi	research
RaBe	20 mCi	calibration
Pu 239	2 uCi	research
Pm 147	300 mCi	research
Kr 85	50 mCi	research

TRAINING & EXPERIENCE WITH RADIATION & RADIOACTIVE MATERIAL
OF

Mr. Richard Rast

RR

EDUCATION: BS Degree in Chemistry, Seton Hall University, [redacted] EX 6

EXPERIENCE: Biological and Clinical Chemistry, Serology and Hematology (2 yrs), Monmouth Medical Center and Patterson Army Hospital, Ft Monmouth, NJ, 1950-52.

Health Physics, Research & Development and Calibration of radiation sensitive systems; design, fabrication and encapsulation of isotopes for calibration systems up to 200 curies level, 1952-62.

During past 13 years in the Radiac R&D Group he has applied his knowledge of physics, health physics, mathematics, and electronics to the solution of engineering problems and equipment design relating to the radiac development program. Specifically, he has worked on field calibration devices, design of new portable radiac equipment, a Remote Large Area Radiac Training Set and a Recording Radiation Monitor and Automatic Radiation Alarm System, 1962-75.

Actively participated in Nuclear Weapons tests at Nevada Test Site (NTS); operations "Upshot Knothole," "Teapot," and "Small Boy." Also operations "Castle," "Redwing," and "Hardtack" at Pacific Proving Ground, Eniwetok, M.I.

73 RD&E 06

ACTUAL USE OF RADIOISOTOPES:

Isotope	Quantity	Place	Duration	Type of Use
Co^{60}	200 curies	Nevada	6 mos total	Equipment Calibration-Hi-range-
Co^{60}	200 curies	Eniwetok	8 mos total	-Dosimetry
Co^{60}	UDM-1(1-9 curies)	Evans	18 yrs(on an as needed basis	Calibration-Dosimetry R&D
Cs^{137}	UDM-1A(120 curies)	Evans	16 yrs(on an as needed basis	Calibration-Dosimetry R&D
Cs^{137}	Mrc 794(220 curies)	Evans	3 yrs	Calibratior Development
$Sr^{90}y^{90}$	Up to 2 curies	Evans	12 yrs	Calibratior Development
Co^{60}	3500 curies	Evans	5 yrs	Equipment Calibration-Hi-range Dosimetry R&D

SUPPLEMENT G

RADIATION DETECTION INSTRUMENTS

SUPPLEMENT G

RADIATION DETECTION INSTRUMENTS

1. The radiation detecting and measuring instruments listed in this supplement are the instruments presently on hand. Instruments may be added or deleted from this inventory during the normal course of use and procurement, but the general overall capabilities of radiation detection and measurement will be maintained. Table G-1 lists the portable radiation detection instruments.

2. In addition to the instruments listed in the table, the following laboratory instruments are available.

a. Scalers for use with shielded GM tubes, gas flow and scintillating detectors.

b. Single channel pulse height analyzers.

c. Victoreen R meters with reader.

d. 2048 channel pulse height analyzer.

e. Baird Atomic Spectrometer Model 530.

f. "Long Counter" for neutrons.

TABLE G-1. PORTABLE RADIATION DETECTION INSTRUMENTS

TYPE INSTRUMENT	NUMBER AVAILABLE	RADIATION DETECTED	SENSITIVITY RANGE	WINDOW THICKNESS	USE
Bendix 611	3	Gamma	5,000 mR	NA	Dosimeter
Bendix 862	3	Gamma	200 mR		Dosimeter
Victoreen 541A	4	Gamma	200 mR		Dosimeter
Landsverk IM9EPD	3	Gamma	200 mR		Dosimeter
JAN IM147	5	Gamma	50,000 mR		Dosimeter
Bendix 884 Tissue equivalent	4	Gamma neutron(fast)	200 mR		Dosimeter
Bendix 609	4	neutron (thr)	120 mrem		Dosimeter
Nucleus Tissue Equivalent	1	Gamma neutron(fast)	200 mR		Dosimeter
Victoreen 440RF	1	Gamma	300 mR/hr	1 mg/cm^2 mylar & 0.005 magnesium	Survey Measuring
Victoreen 440	2	B-Gamma X	300 mR/hr	1 mg/cm^2 mylar & 0.005 magnesium	Survey measuring
Victoreen 740	1	Alpha B-Gamma	2500 mR/hr	0.005 mylar	Survey measuring
Radiac Set AN/PDR 27	3	B-Gamma	500 mR/hr (4 scales)	GM tubes JAN 5980 & JAN 5979 Mil-E-1	Survey Measuring
Radiac Set AN/PDR-39	2	Gamma	50,000 mR/hr	thick wall Ion ch	survey Measuring
Nuclear-Chicago 2610-A-P.15	2	B-Gamma	20 mR/hr	thin wall GM tube D50	Survey Measuring
Nuclear-Chicago 2612-P.16	2	B-Gamma Alpha	20 mR/hr	1.4 mg/cm^2	Survey Measuring

Radiac Set AN/PDR-46	2	B-Gamma	20 mR/hr	Beta window GM tube	Survey Measuring
Baird-Atomic 420E	2	B-Gamma Alpha	12½ mR/hr	End window GM tube	Survey Measuring
Nuclear-Chicago 2612	1	B-Gamma	20 mR/hr	Thin wall GM tube	Survey Measuring
Eberline PIC-6	2	Gamma	1000 mR/hr		Survey Measuring
AN/PDR-52	1	B-Gamma Alpha	1000 mR/hr	Thin mylar	Survey Measuring
Eberline PRM 5-3 w/ HP 260 probe	2	B-Gamma Alpha	500,000 CPM	2 mg/cm^2	Survey Measuring
Eberline E-500B	1	B-Gamma	2000 mR/hr	thin wall GM	Survey
Chirpee 904517	3	Gamma	1 chirp/.1 mR	GM tube	warning dosimeter
Chirpee PRM 253	5	Gamma	1 chirp/.1 mR	GM tube	warning dosimeter
Eberline PAC 1SA	1	Alpha	1,000,000 CPM	Aluminized mylar 1.5 mg/cm^2	Survey Measuring
Nuclear Chicago 2671	2	neutron	25,000 n/cm^2/sec	removable moderator	Survey Measuring
Tracerlab NP-1 Snoopy	1	neutron	2000 mrem/hr		Survey Measuring
Eberline PNC-1	1	neutron	50,000 events/min		Survey Measuring
Eberline PRN-4	1	neutron	5000 mrem/hr		Survey Measuring

AN/PDR-56	2	Alpha	100,000 CPM	1.5 mg/cm^2	Survey Measuring
Atomic Accessories TSM-91-C	1	tritium	30,000 microCi	0	Alarm & Air monitor
Mighty Mite MS-343	2	air sampler			Air sampling

SUPPLEMENT H

INSTRUMENT CALIBRATION

SUPPLEMENT H

INSTRUMENT CALIBRATION

1. Instruments that respond to gamma radiation are calibrated in a standard gamma flux obtained from an AN/UDM-1 (Co-60) or an AN/UDM-1A (Cs-137) calibrator. The calibrators were calibrated with Victoreen R-meters. The R-meters were in turn calibrated by the NBS and certified to 3%. The source intensities are corrected each month for decay.

2. The Nuclear Chicago Model 2670 Alpha Survey Meter was calibrated originally at the factory with a Ra-D+E standard. A secondary standard Uranium-Oxide is incorporated in the instrument and may be used to calibrate it to 5%.

3. An Army Radiac Calibrator , AN/UDM-6, containing four standard plutonium 239 sources is used for calibrating alpha instruments.

4. Counting systems for determining the amount of radioactive material in samples are calibrated with sources accurate to 7% or less. These are obtained from various commercial firms, such as US Nuclear Corp, Tracerlab Inc, Atomic Accessories, Baird Atomic, etc.

5. An NBS calibrated 2.92 mCi Ra-226-Be neutron source (± 3%) is used to calibrate neutron instruments.

6. Calibrations are made after maintenance procedures that may result in a calibration change and at three month intervals.

7. When RD&E personnel take instruments to remote locations such as the Nevada Test Site or Fort Huachuca, Ariz, the instruments are calibrated prior to departure. If the instruments are to be gone for an extended period of time, arrangements are made to have them calibrated at the remote location, or the instruments are sent to a calibration facility, or appropriate sources or calibrators are taken to the remote location and the instruments calibrated on location.

8. The Atomic Accessories Model TSM-91-D Tritium Monitor is calibrated with a special source, Atomic Accessories Model TCS-179B, supplied with the monitor. The calibration procedure that came with the equipment is used.

SUPPLEMENT I

FACILITIES AND EQUIPMENT

SUPPLEMENT I

FACILITIES AND EQUIPMENT

1. The following facilities are described.

a. Evans area:

(1) Building 401

(a) Irradiation Room

(b) Van de Graaff

(c) Neutron Generator

(2) Building T-383 - Radioactive material storage vault

(3) Building S-45 - Decontamination and Processing rooms.

(4) Area G, Evans Area

b. Oakhurst Station

c. Accelerator at Gateway National Park.

d. Other remote locations.

2. Most of RD&E's work involving byproduct material is in the Evans Area. However, small quantities are routinely used in the Charles Wood Area. Work involving byproduct material occasionally takes place at other subposts of the Fort Monmouth complex. The main areas are described in this supplement. In addition, work involving tritium is routinely performed at Gateway N P On occasions RD&E personnel use some of its sealed sources at remote locations. A description of the Gateway N P facility is included with some information regarding the other remote locations used. Gateway N P and the Lakehurst Naval Air Station are less than thirty miles from Fort Monmouth.

3. Evans Area. The Evans Area is the southern most subpost of the Fort Monmouth complex (See Fig A-1). The area covers approximately 230 acres. About half of the area is surrounded by a twelve foot high security fence. The unfenced area has a very low population density, even during working hours. Most of the work, involving byproduct material at the Evans Area takes place in Buildings 401, S-45 and T-383. These buildings and Area G are within the security area.

4. Evans Area - Building 401. With the exception of the heater room, vestibule and two offices, the inside of the building is a restricted area. The building has three levels (See Fig I-1).

a. Irradiation room. The irradiation room (See Fig I-2) has thick concrete walls. The wall between the irradiation room and the "Work areas" contains three multilayered, round, high density glass windows. A 3 ft wooden picket fence divides the room into areas referred to as the High Radiation Area and the Radiation Area. Near the fence on the High Radiation Area side are two Radiac Calibrator Sets, AN/UDM-1 and AN/UDM-1A. One is located on each side of the room. A large portion of the center part of the fence can be removed so that large equipment may be moved in or out. The gates and the calibrators are equipped with switches that are so arranged and wired that an audio alarm will automatically sound if a gate is opened when either of the calibrators are in use. In addition, a light near a calibrator and one at the door to the room goes on when a calibrator is put into operation.

The direction of the beams from the calibrators, when they are in use, is away from the fence. Normally only one calibrator is in use at a time; however, when both are on the highest setting, air dose rate on the Radiation Area side of the fence is only 30 mR/hr. The air dose rate at the open door is 2 mR/hr. With door (covered with 1/8 inch of lead) closed the air dose rate is 0.5 mR/hr outside the door.

A proposal has been made to add a third calibrator, another AN/UDM-1A, at the location shown in Fig I-2. While these calibrators were designed to calibrate Army and Navy radiac instruments, these particular ones are used more as sources of radiation for research, development and testing purposes. Considerable time is required to "set up" apparatus. The study or use of the "set up" may only utilize radiation for a short period of time, daily for a number of days. The addition of a second AN/UDM-1A will permit productive use of the shielded room a higher percentage of the time.

b. Van de Graaff Accelerator. A 2 MeV Van de Graaff accelerator, made by High Voltage Engineering, is located on the second floor (See Fig I-1). The accelerator target is located on the ground floor. Both areas have shielding walls. Entry into the target room is through a maze with a lead covered door at its entrance. Entrance to the second floor room where the accelerator is located and to the basement area below the target room is through the maze and target room. Two mirrors are located in the maze, such that a person standing just outside the open maze door has a fairly good view of the target room. The door to the maze is equipped with a safety interlock that normally makes it impossible to operate the accelerator with the door open. When it is necessary to make target room observations from just outside the entrance to the maze, the interlock may be bypassed when an individual, approved by the Committee for this operation, is at the maze door and the RPO has been informed in advance and has approved of the operation. The control console is on the face of the maze.

The Van de Graaff may be used to accelerate either positive ions or electrons at energies up to two MeV. The electrons are used to produce X-rays. Accelerated protons or deuterons are used to produce neutrons, radioactive material or used to study nuclear reactions.

c. Neutron generator. The console for an Atomic Accessories Neutron Generator, Model GN 312 is located in the main work area. This generator uses a Phillips Neutron Generator Tube 18600. The generator tube is located in the tunnel of the basement (See Fib I-1). Interlocks are located at the pit entrance to the basement, at the Van de Graaff maze entrance and at the X-ray Shield entrance. The neutron generator cannot be operated unless these doors are closed. The Phillips Tube 18600 contains a 9.5 curie tritiated target that is in a hermetically sealed vacuum tube.

The fast neutron intensity, when the neutron generator is operating at maximum output, is less than two millirem per hour at the console. A portable neutron survey instrument does not indicate a reading above background in the unrestricted areas around building 401.

When all facilities are in use the radiation intensity in the work and office areas of the building is approximately 0.05 mR/hr from gamma and X-rays while the levels of other types of radiation is too low to detect with portable ratemeters.

5. Evans area - Building T-383 Radioactive Material Storage Vault. Fig I-3 shows the radioactive materials storage vault. One portion of the building is used to store radioactive waste for decay or until a waste disposal shipment is made. The remainder of the building is used to store radioactive material. The building is equipped with an exhaust fan that exhausts a volume of air approximately 2½ times the volume of the building every minute. The fan comes on whenever the door is opened. The building is locked when not in use and access to the key is controlled. The building is not used for any purpose other than the storage of radioactive material.

6. Evans area - Building S45 - Decontamination and radioisotope processing rooms. Fig I-4 shows the decontamination room and the processing room that are in bldg S45. A Scott Air Pack, for emergency use, is located on the same floor of this building.

a. Room 15B - Decontamination room. This room is equipped with a shower, a hand sink and a floor drain. The three drains are connected to a 550 gallon "hot" waste storage tank that is buried NNE of the radioisotope processing room (See Fig I-4). The room is equipped with a toilet.

b. Room 15C - Radioisotope processing room. This room is equipped with remote handling tools, a ventilated hood and a glove box, and a stainless steel sink that drains into the "hot" waste storage tank. The hood and the golve box are both equipped with air filters. Air ducts from the filters lead to a tall stack. The drain from the hood cup sink is also connected to the "hot" waste storage tank. A second 550 gallon "hot" storage tank is also located NNE of the radioisotope processing room. Liquid in the first tank that the various drains are connected to can be pumped into the second tank. Tap water can be added to the second tank for dilution purposes. The tap water line is not

directly connected to the tank so water from the tank cannot siphon into the tap water line. Liquid from this second "hot" storage tank can be pumped into the sanitary sewer. The two "hot" liquid waste pumps are located under a removable steel plate in the floor of the room. Lead brick are available for constructing temporary work and storage shields.

7. Evans Area G. Area G at Evans is located in a portion of the Evans security area that has a low work population density. Within Area G a special Irradiation Range has been established (See Fig I-5). The range is used for experiments which require a minimum of scattering. Each use of radioactive material in this area must be in accordance with ECOM Regulation 385-9, which is attached as inclosure 1 to Supplement J.

8. Oakhurst Station. Fig I-6 shows the Oakhurst Station. The station is equipped with a 400 foot tower that has an elevator. This unique facility makes it possible to safely examine collimated beams at considerable distances from sources on the ground.

9. Accelerator at Gateway National Park.

a. An ECOM RD&E accelerator, manufactured by the Kaman Nuclear Corp (Neutron Generator Madel A1001) is located in building 539 at Gateway Park. Fig I-7 shows building 539 and its relation to the Atlantic Ocean and to other buildings. The insert map included in Fig I-7 shows the building location in relation to the ocean, bays, and the mainland. Gateway Park is located on Sandy Hook. Building 528 is the nearest building that is occupied. Facilities numbers 180, 530, and 541 are not occupied. The population density of the area near the facility is low.

b. There is a six foot fence around that portion of the building where a radiation area exists during operation, and caution signs have been posted on each side of the fence.

c. Fig I-8 shows the electrical circuits for heat, lights, safety interlock and warning lights. When the generator switch is first placed in the "on" position a warning bell rings for ten seconds before the accelerating voltage can be "run up". When the generator is "on" red warning lights are turned on in the locations indicated in Fig I-8. The gate to the maze is interlocked so that the generator is shut off if the gate is opened.

d. Fig I-9 shows the locations of the shielding walls. The shaded portion was added to the original building in order to increase the shielding. Between the control room and the generator room there is a total of 64 inches of concrete block and poured concrete.

e. Various instruments have been used to determine the dose rate an operator near the control console is exposed to. Examples of readings that have been obtained are:

Victoreen Model 440RF ratemeter - 1.3 mR/hr

Texas Nuclear Model 9140 NEMO
Special Neutron Dosimeter System - 1.4 mrem/hr

Eberline Model PNR-4 - 1.3 mrem/hr

f. Fig I-9 shows part of the ventilation system. Fig I-10 shows the overhead shielding and the ventilating duct elevation. Ventilating system measurements are as follows:

Location	Velocity	Volume per unit time
Inlet duct	1440 ft/min	576 CFM
Outlet duct	1950 ft/min	950 CFM

The volume of air being exhausted through the stack every two minutes is equivalent to the volume of the neutron generator room. The direction of air flow in the control room is toward the maze and generator room.

g. According to the Operation Manual for the Model A-1001 Neutron Generator the following total quantities of tritium are released under the circumstances indicated.

(1) Target changes (with isolation valve closed) - 1.8×10^{-3} mCi.

(2) Replenishing cartridge change (with isolation valve closed) - 1.8×10^{-3} mCi.

(3) Evacuation of entire accelerator (ion pump off) - 0.035 mCi.

(4) Breakage during replenishing - 0.207 mCi.

(5) Breakage at other time - no tritium released.

(6) Evacuation of entire accelerator (ion pump on using Kaman Sorption Pump) - no tritium released.

Condition (4) above would release the most tritium and it would take place in the shortest time. The tritium would be released into the neutron generator room. Assuming, to simplify the calculations, that all of the tritium released into the room would be removed in the length of time it would take the blower to exhaust a volume of air equal to the volume of the room (2 min or 120 sec), the average release rate would be

$$\frac{0.207 \text{ mCi}}{120 \text{ sec}} = 1.7 \times 10^{-3} \text{ mCi/sec}$$

Evaluation of the likelihood of someone outside the facility being exposed to excessive concentrations of tritium in air has been calculated using equations from Herman Cember's book "Introduction to Health Physics", published by Permagon Press. Using the above release rate and a wind velocity of 5 mph with all other values maximized for worst case resulted

in a 96% assurance that the maximum concentration at ground level would be 1.2×10^{-9} microcuries per milliliter. This concentration is approximately 1/170 the MPC listed in 10 CFR 20.

h. A remote wind velocity and direction indicator is located in the control room. Target replenishing, target change or total system pump down is not performed unless the wind velocity is 5 mph or greater.

i. A tritium air monitor with an alarm is used to insure that the air in the accelerator building, where operating and maintenance personnel are located, is below the MPC for air of 5×10^{-6} microCi/ml for radiation workers.

10. Other remote locations. When sealed sources covered by an RD&E license are used at locatinns outside the Fort Monmouth complex by individuals approved by the Committee on a project approved by the Committee, the facilities of the remote location are used if they are adequate. The shipping container usually serves as both the storage and use container. If the shipping container is not suitable for use as both storage and use containers and suitable containers are not available at the remote location then suitable ones are supplied by the RD&E Radiological Safety Office. If they are needed and are not available at the remote location the RD&E Radiological Safety Office will supply radiation signs, fence posts, rope, survey instruments, etc.

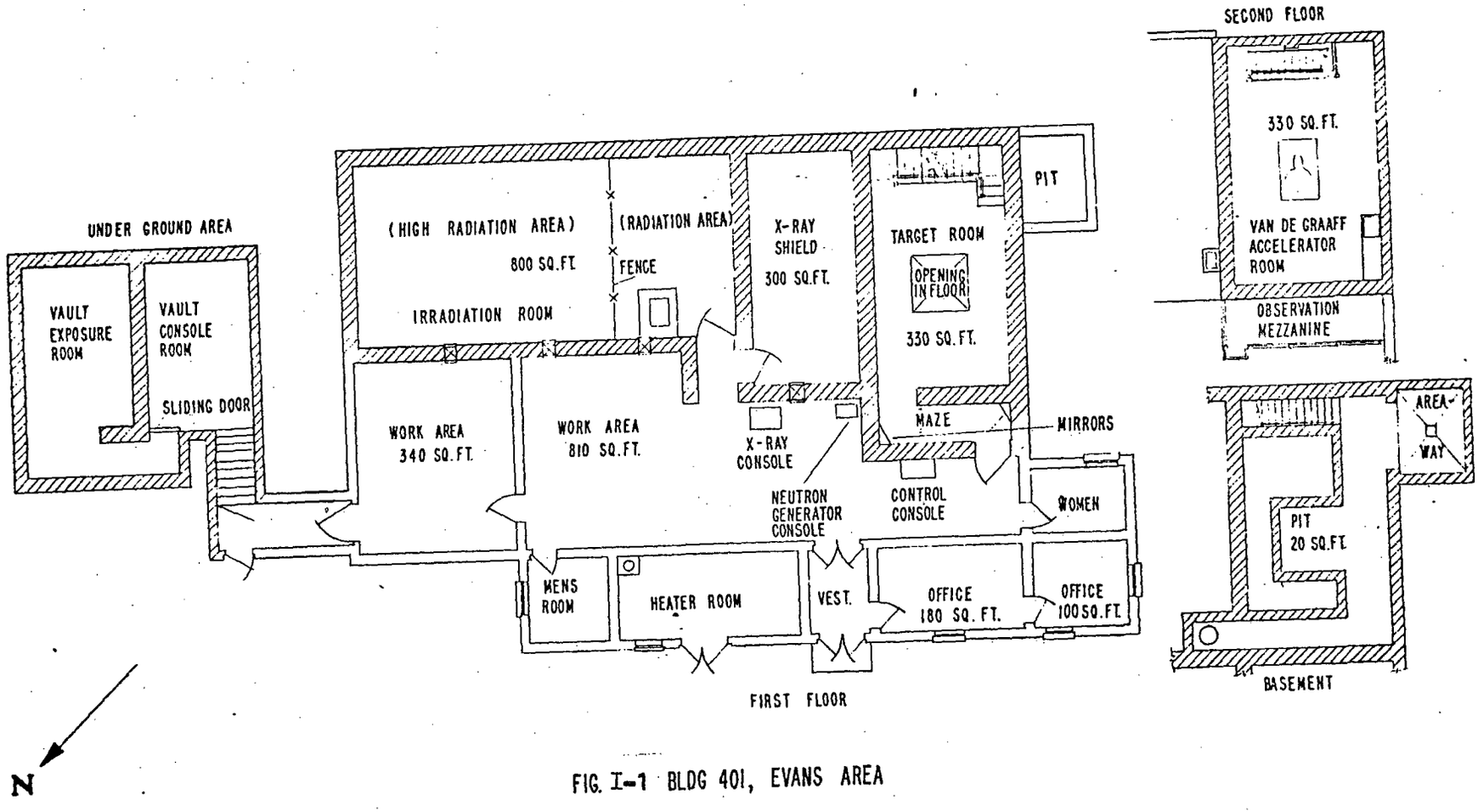

FIG. I-1 BLDG 401, EVANS AREA

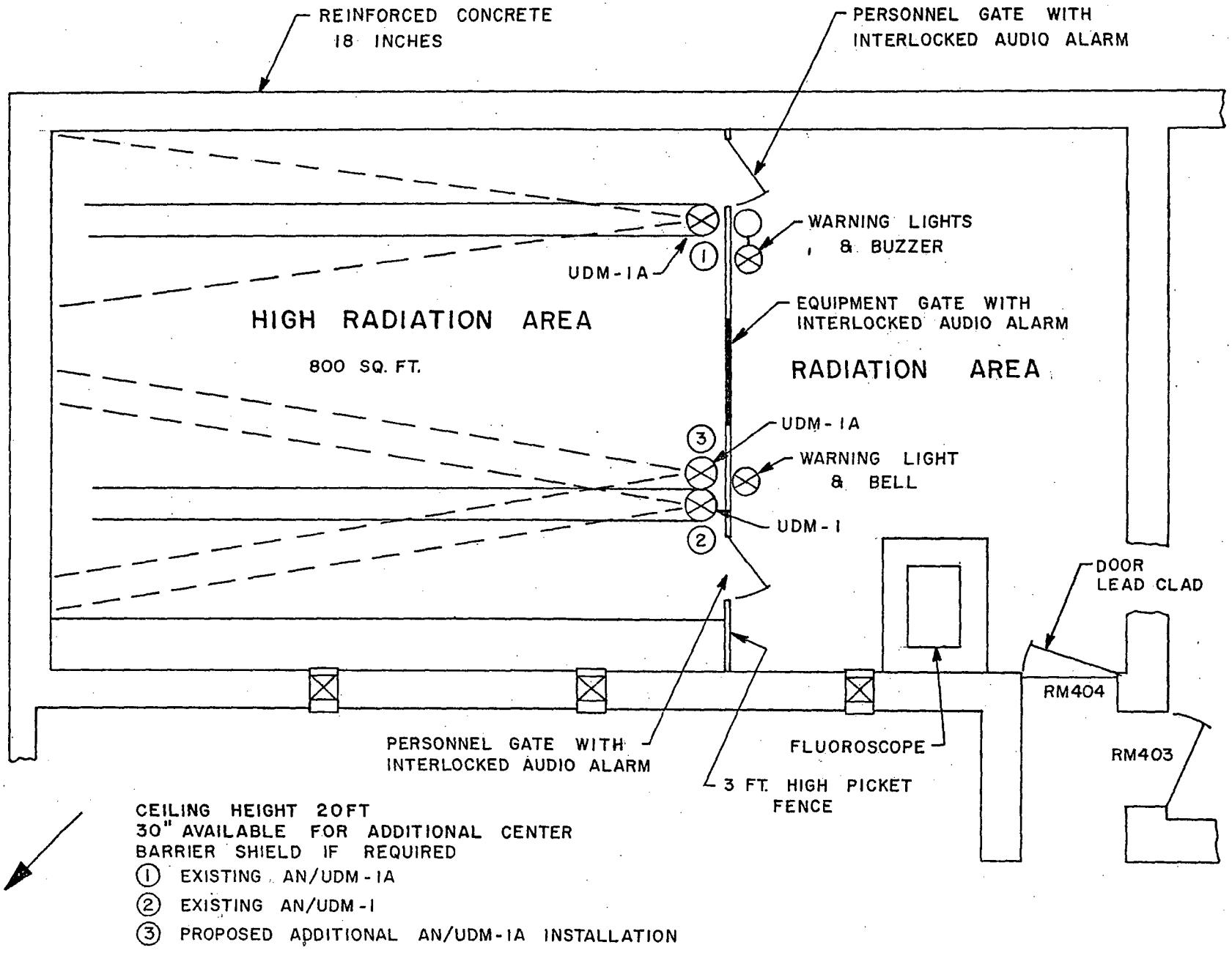

FIG. I 2 IRRADIATION ROOM, BLDG 401, EVANS AREA

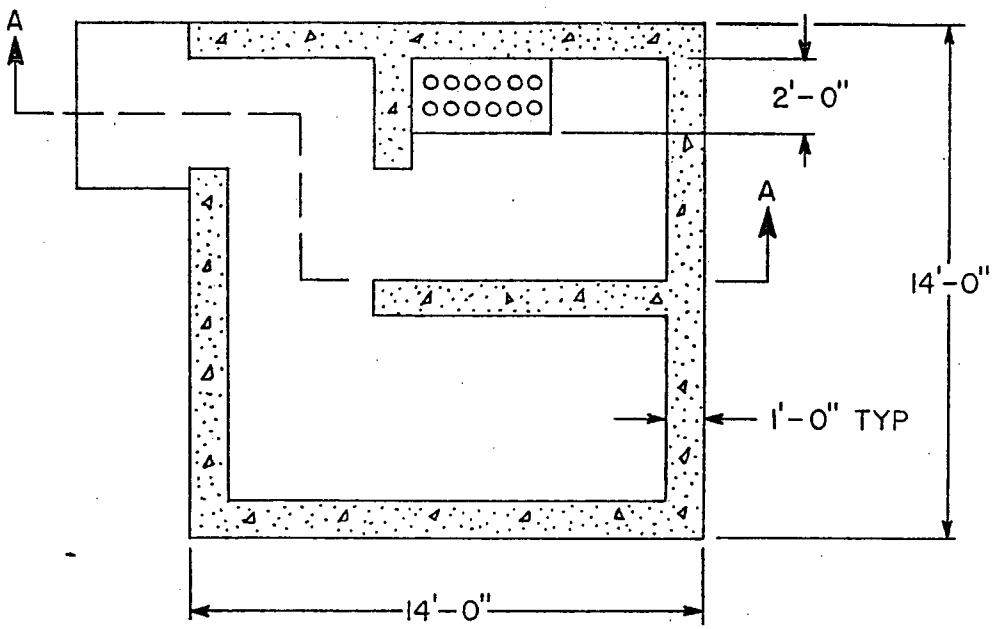

FLOOR PLAN

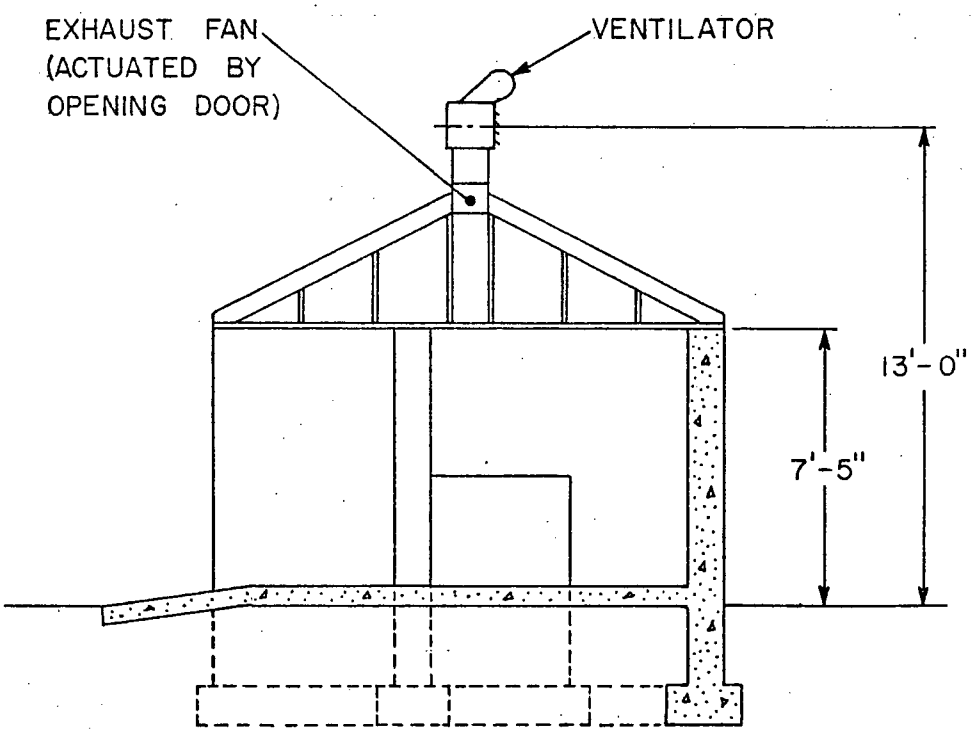

SECTION A-A

FIG. I-3 BUILDING T-383 RADIOACTIVE STORAGE VAULT, EVANS AREA

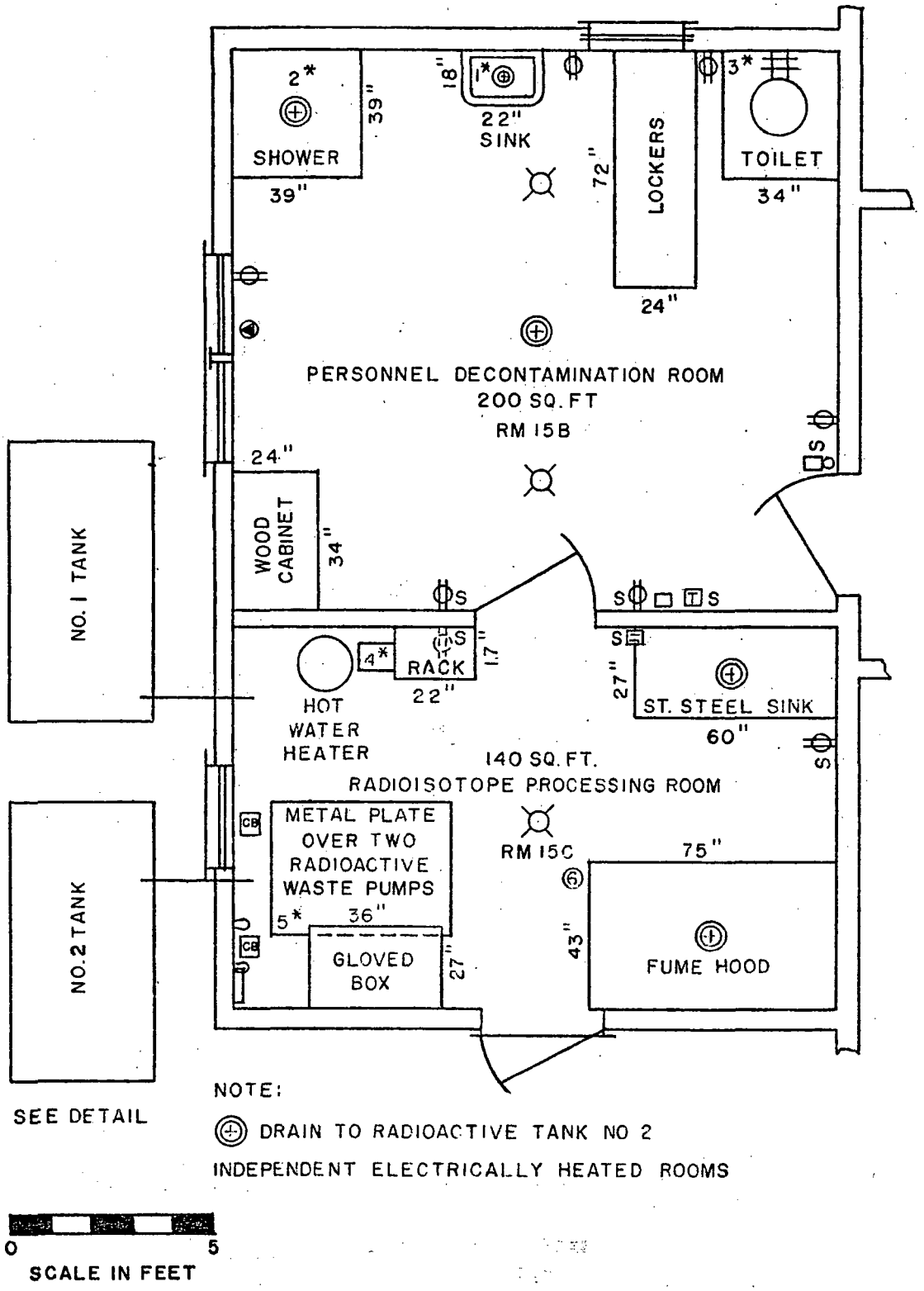

FIG. I-4 DECONTAMINATION AND PROCESSING ROOMS, BLDG S-45, EVANS AREA

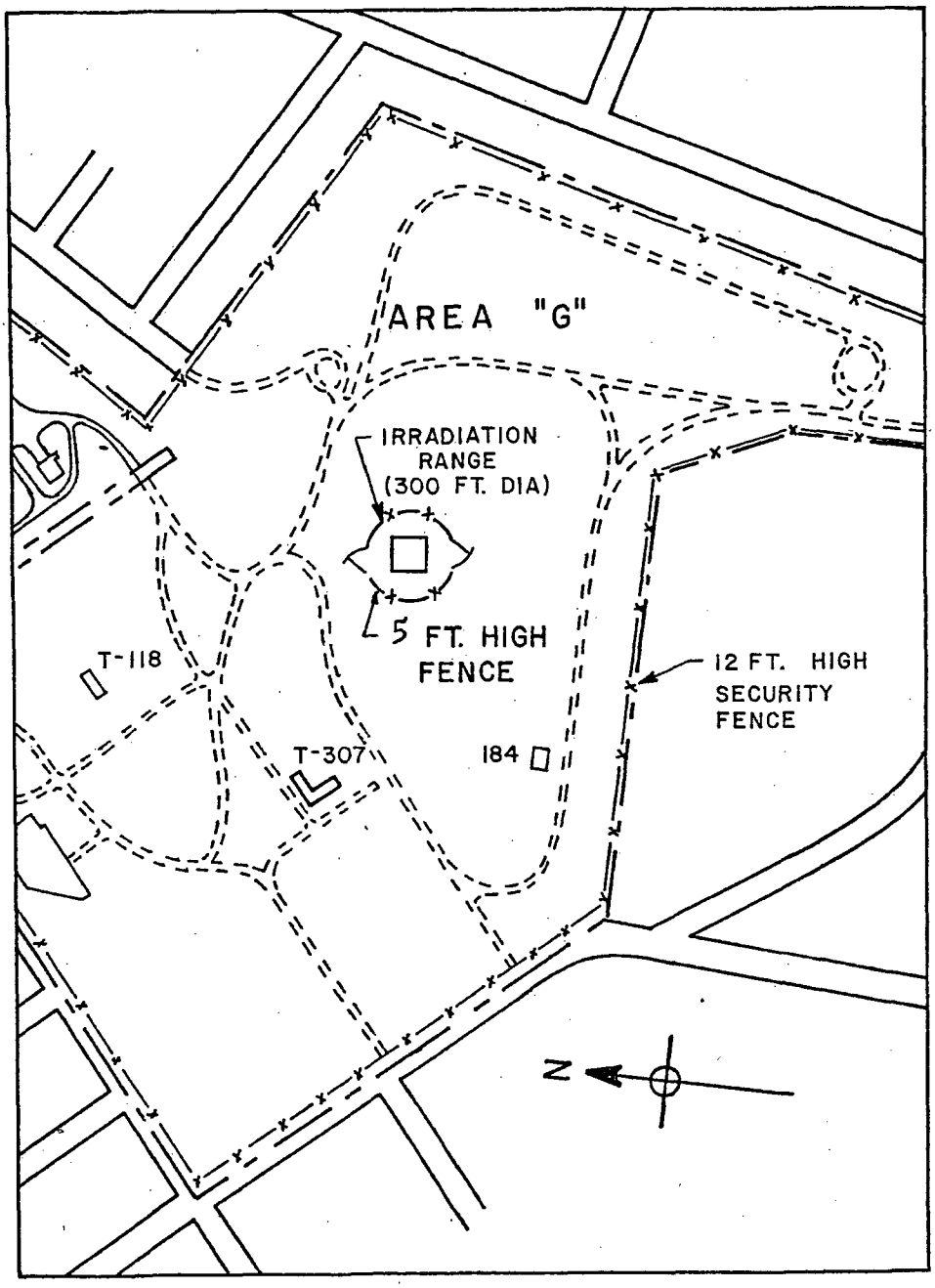

FIG. I-5 AREA "G", EVANS

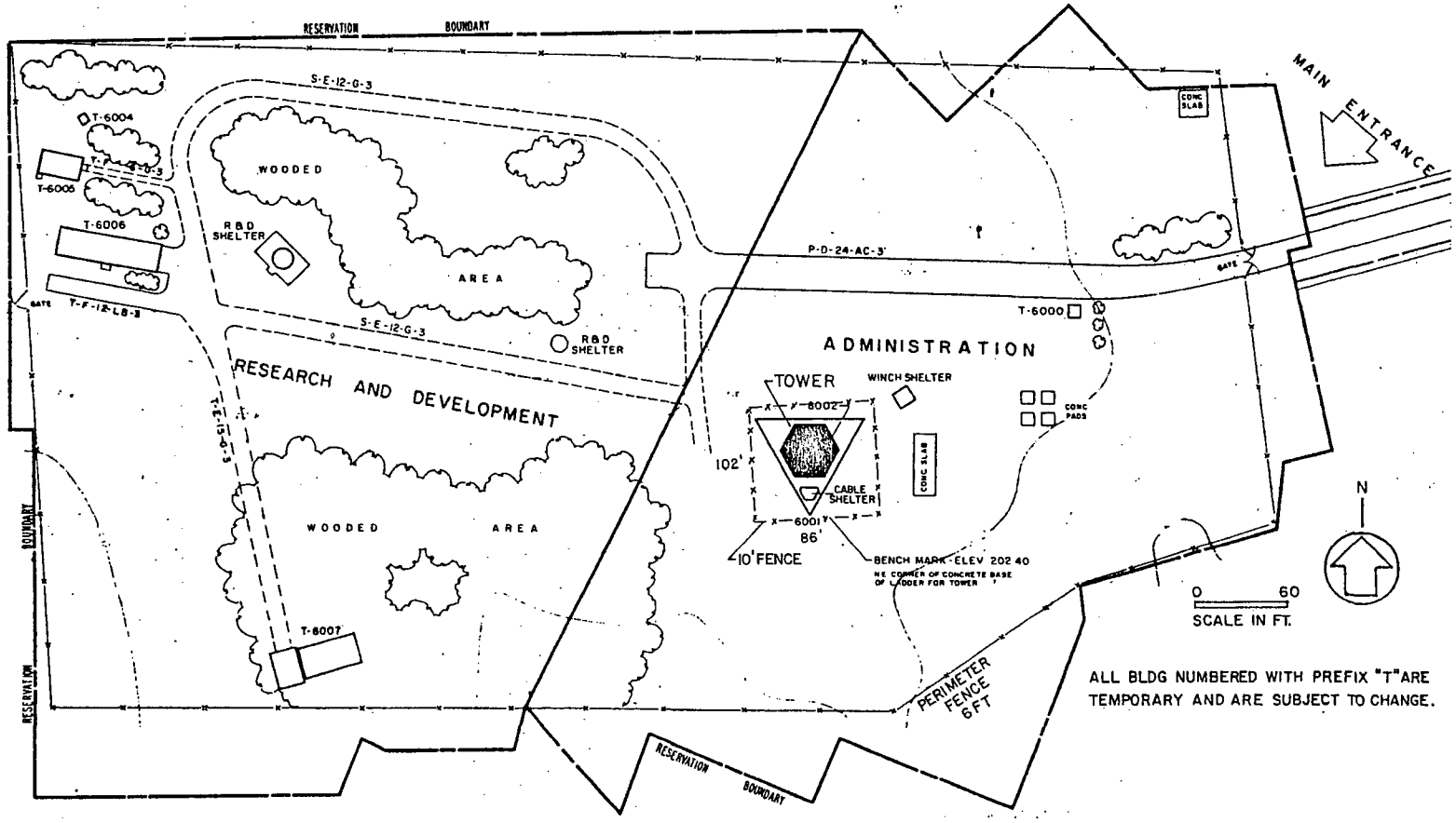

ALL BLDG NUMBERED WITH PREFIX "T" ARE TEMPORARY AND ARE SUBJECT TO CHANGE.

FIG. I 6 FORT MONMOUTH - OAKHURST STATION

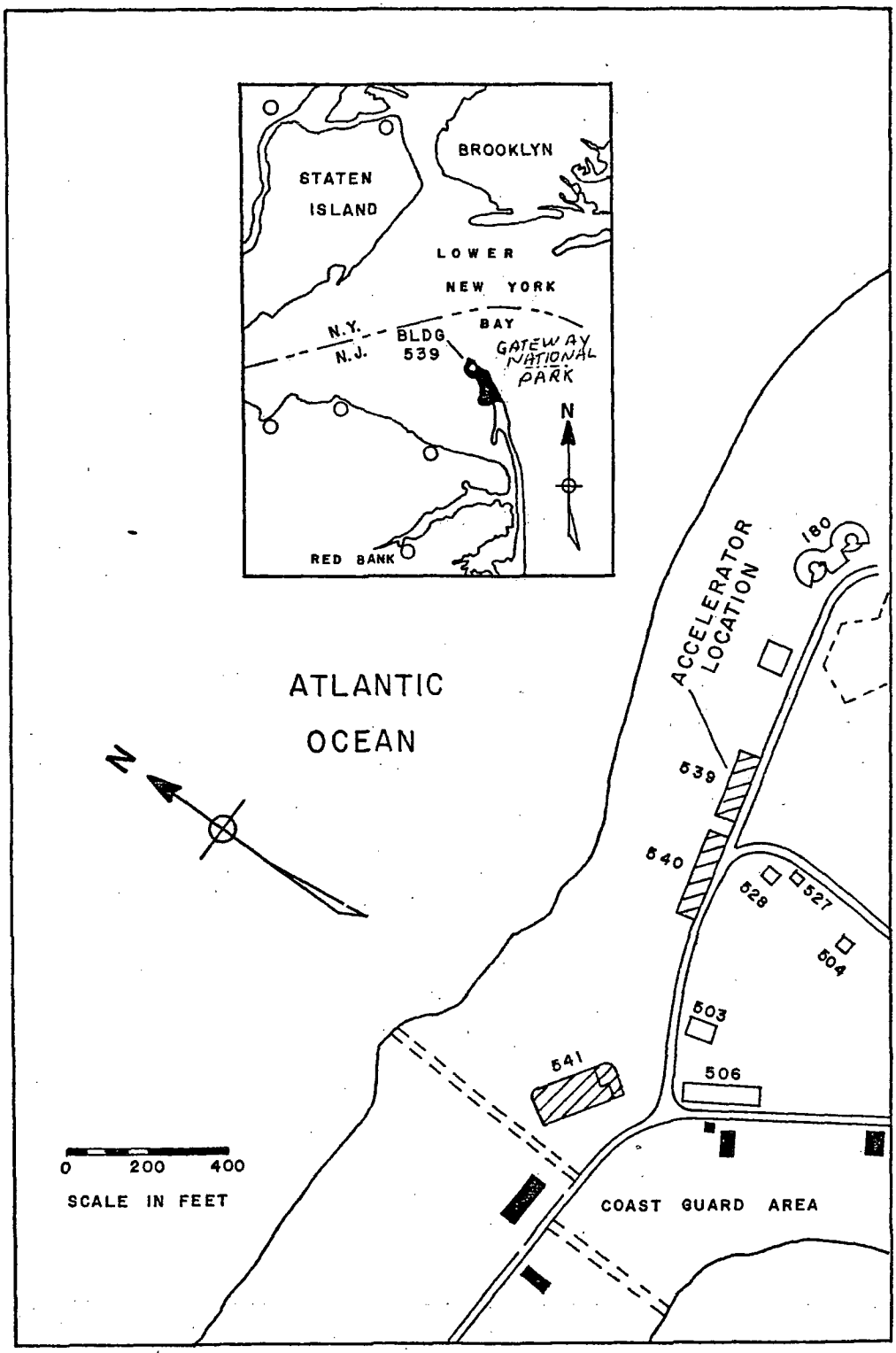

FIG. I -7 ACCELERATOR LOCATION AT GATEWAY NATIONAL PARK

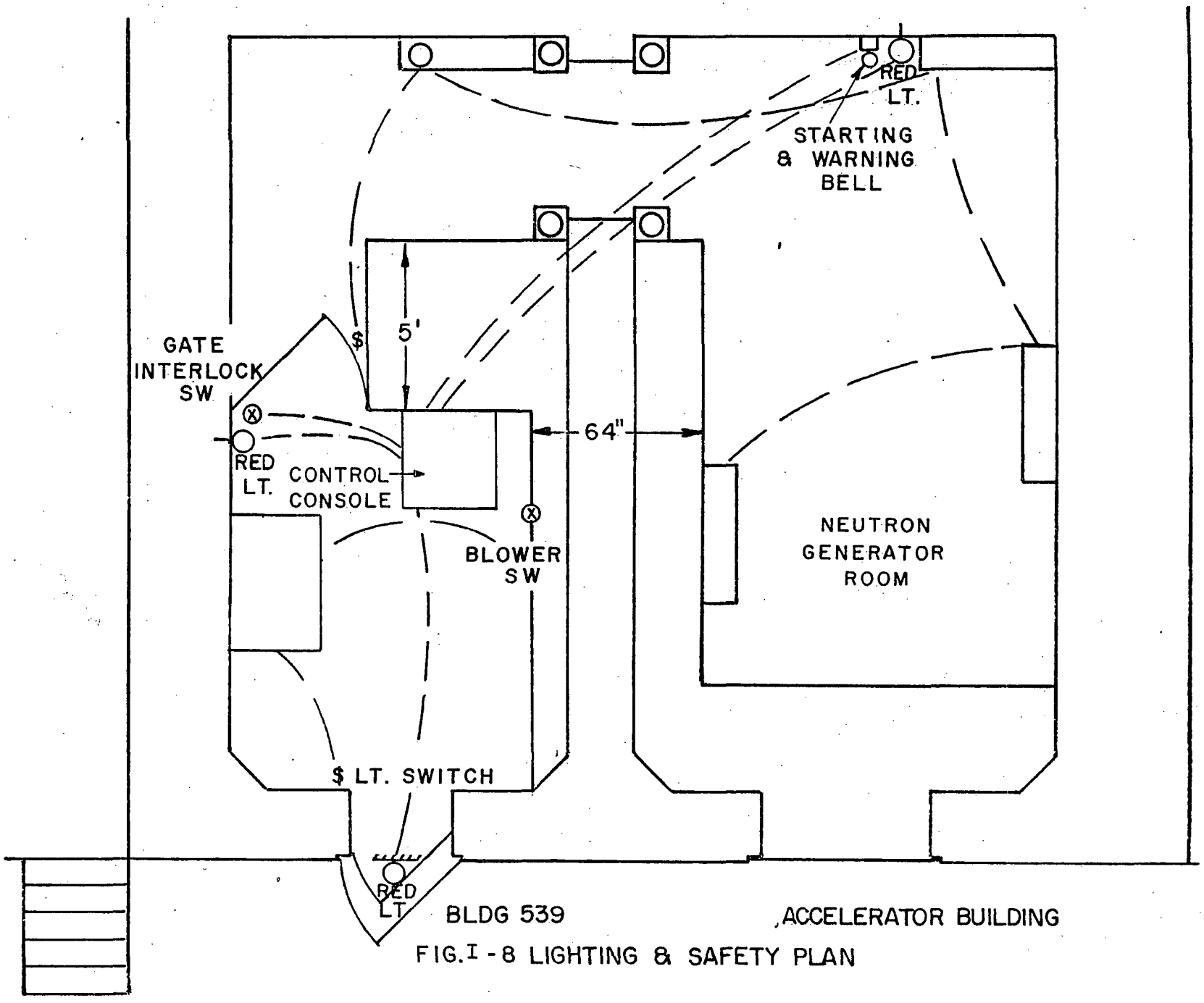

FIG. I - 8 LIGHTING & SAFETY PLAN

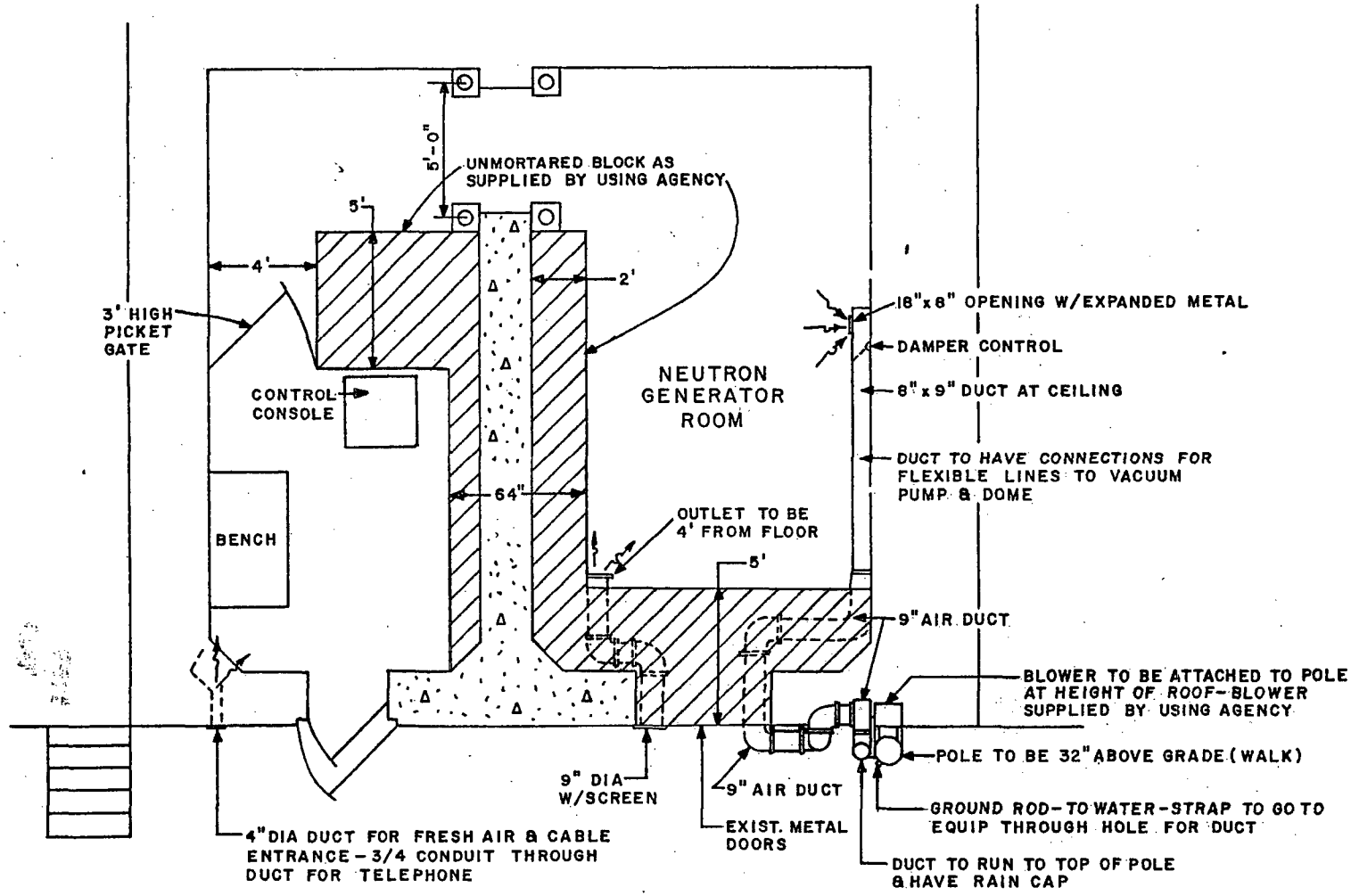

BLD. 539
ACCELERATOR BUILDING

FIG. I-9 BLOCK & VENTILATION PLAN

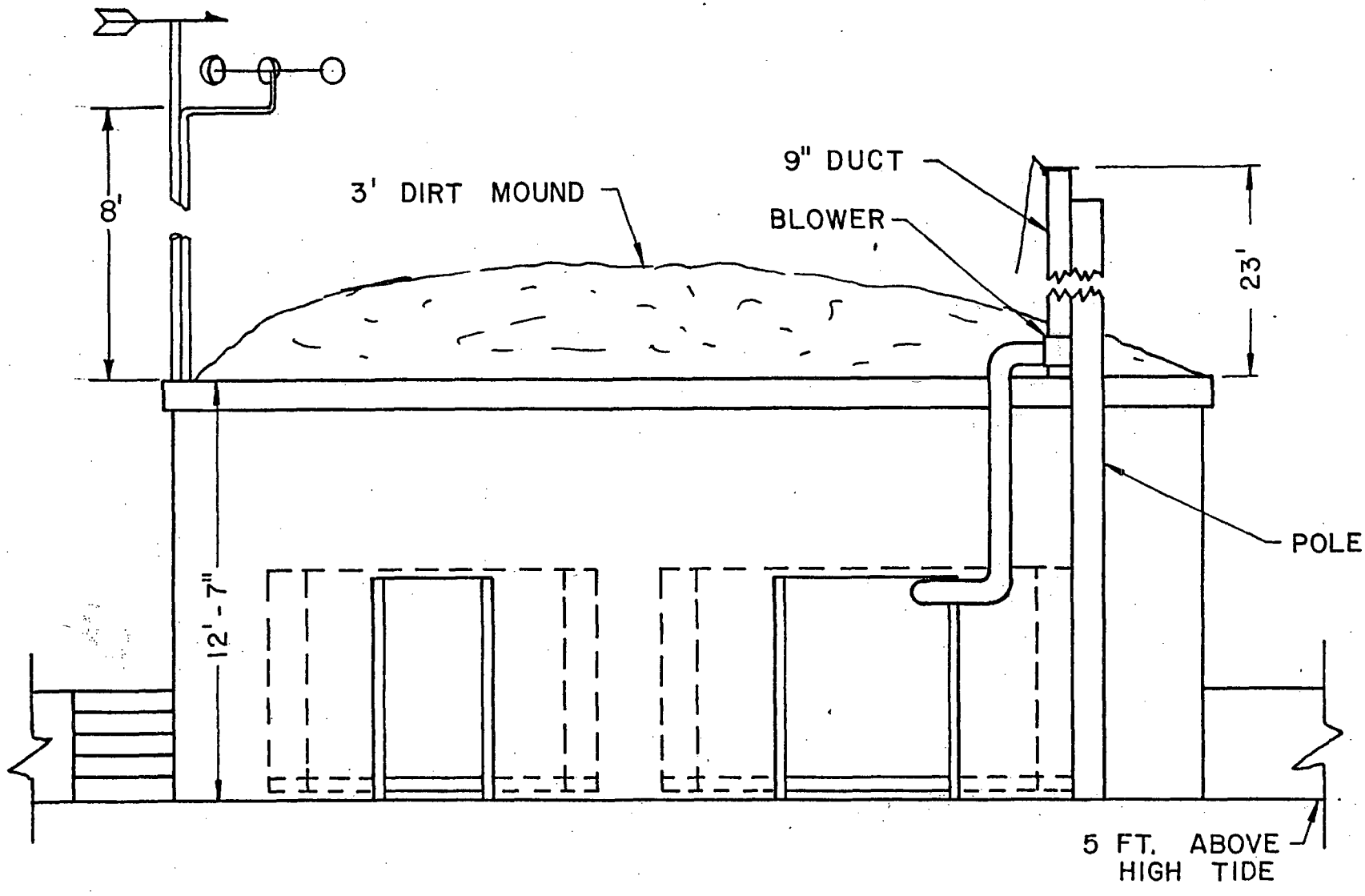

BLDG. 539
ACCELERATOR BUILDING
FIG. I-10 ELEVATION VIEW

SUPPLEMENT J

RADIATION PROTECTION PROGRAM

SUPPLEMENT J

RADIATION PROTECTION PROGRAM

1. The radiation protection program is described in ECOM Regulation 385-9 (See Incl 1) and RD&E Policy Memorandum Technical #1 (See Incl 2).

2. The primary sealed source leak test method will be smear tests, however, bubble leak tests, vacuum leach tests or other types of tests may be used occasionally on some sources. The amount of radioactive material removed by wipe or water used in the vacuum leach test will be determined by procedures and equipment capable of measuring 0.005 microcuries of the type of radioactive material in the sealed source being tested.

3. Sealed source leak tests will be performed by one or more of the individuals listed in para 2 of Supplement F. Resumes of their training and experience are also located in Supplement F.

4. Initial radiation surveys will be made by the RPO, a technical member of his staff, by individuals approved by the committee to make such surveys, or by the US Army Environmental Hygiene Agency.

5. Sealed sources that are found to be leaking will be sealed inside a storage container and placed in storage until arrangements can be made for their disposition. They will either be repaired by a "person" licensed to make such repairs or disposed of as radioactive waste.

HEADQUARTERS
UNITED STATES ARMY ELECTRONICS COMMAND
FORT MONMOUTH, NEW JERSEY 07703

ECOM REGULATION
No. 385-9

17 August 1973

Safety

IONIZING RADIATION CONTROL

1. Purpose. This regulation defines policies, responsibilities, and procedures for control of ionizing radiation health hazards on Fort Monmouth. It establishes criteria for the operation of all ionizing radiation producing equipment and for all production, transportation, handling, storage, possession, and disposal of radioactive materials on Fort Monmouth, or licensed by US Army Electronics Command (ECOM) organizations headquartered at Fort Monmouth, except those involved in disaster control operations.

2. Scope. This regulation applies to all who possess, use, or handle sources of ionizing radiation within the confines of Fort Monmouth or under provisions of Atomic Energy Commission (AEC) licenses administered by ECOM organizations headquartered at Fort Monmouth. It is distributed to all ECOM and tenant activities located at Fort Monmouth for information and guidance.

3. Definitions. Definitions of terms used herein are those appearing in Title 10, Code of Federal Regulations (10CFR), chapter 1, "Atomic Energy". In addition, the following definitions pertain:

a. Ionizing Radiation: Electromagnetic or particulate radiation capable of producing ions, directly or indirectly in its passage through matter. For purposes of this regulation, alpha and beta particles, gamma rays, X-rays, and neutrons are examples of ionizing radiation. This type of radiation does not include sound or radio waves, visible, infrared, or ultraviolet light or LASERS.

b. Ionizing Radiation Control Program: Encompasses the measures established by management to insure safety of operations, training, identification of hazards, conformance with procedures and standards for users of ionizing radiation sources, to effect ECOM assignments.

*This regulation supersedes ECOMR 385-9, 15 Nov 66, and ECOM Suppl 1 to AMCR 385-25, 16 Sep 72, including all changes.

c. ECOM Ionizing Radiation Control Committee (IRCC): A group of knowledgeable individuals appointed by the Commanding General who are competent to review the total radiation program from all safety and health aspects and to advise the Commanding General on policy and required actions.

d. Radiological Protection Officer (RPO): An individual designated by the commander to provide consultation and advice on the degree of hazards associated with ionizing radiation and the effectiveness of measures to control those hazards. This individual shall be technically qualified by virtue of education, military training, and/or professional experience to associated capability commensurate with the assignment. The term "radiological protection officer" is a functional title, and is not intended to denote a commission status or job classification within the armed forces.

4. Policy. It is ECOM policy that:

a. Use of ionizing radiation will be controlled so that the radiation exposure for individuals within ECOM is no greater than limits prescribed in appendix A.

b. Safety of operations will guide transactions concerning handling, storing, disposing, and repairing items which contain radioactive material or produce ionizing radiation and which are to be stored or used at Fort Monmouth.

c. Control and approval of applications for AEC licenses, Department of the Army (DA) authorizations and permits, and procurement of ionizing radiation sources is assigned to the IRCC.

5. Exemptions. The following materials, equipment, and conditions of exposure are exempt from the controls established by this regulation.

a. Natural radioactive materials of an equivalent specific radioactivity not exceeding that of natural potassium (i.e., 0.0001 microcuries per gram) and by-product radioactive materials in quantities or concentrations not greater than those specified in the schedules of applicable AEC and DA regulations, provided they are not used in such a combined quantity that any person might receive a radiation dose exceeding one-tenth the applicable Radiation Protection Guide (RPG) in appendix A.

b. Electrical equipment such as high voltage units (e.g., klystron tubes) that is not intended primarily to produce ionizing radiation and which operates in such a manner that no person can receive a radiation dose exceeding one-tenth the applicable RPG.

6. Responsibilities. a. The Chief, Safety Office, ECOM, exercises staff supervision over the ECOM Ionizing Radiation Control Program.

b. The IRCC functions in accordance with 10CFR 33, AR 700-52, AMCR 385-25, and AMCR 385-30. The member assigned as the Commanding General's representative will authenticate AEC licenses and DA authorizations and permits.

c. Commanders and directors of activities (e.g., Research, Development, and Engineering (RD&E) and Maintenance Directorates, and Headquarters and Installation Support Activity (HISA) and US Army Medical Department Activities (MEDDAC), etc.) requiring use of ionizing radiation are responsible for implementing the Ionizing Radiation Control Program within their purview and will:

(1) Provide surveillance of all radiological health controls, maintain an inventory of all radiation sources within their activity, and confirm adherence to applicable license criteria.

(2) Provide enforcement of radiological controls at all their areas.

(3) Review all construction, siting, and operational plans involving the storage or use of radiation sources or equipment for compliance with radiation protection regulations and good health practices, and advise the Chief, Safety Office, ECOM, and the ECOM IRCC of potential personnel hazards.

(4) Maintain liaison with the Fort Monmouth Fire Department and Internal Security Division, HISA, on locations of radioactive material and where hazards to personnel may be created as a result of fire involving radioactive material.

(5) Perform radiation surveys in compliance with AR 700-52 at least once every 30 days.

(6) Maintain records in accordance with 10CFR 30, AR 700-52, and TM 38-750.

(7) Report to Chief, Safety Office, ECOM, any probable overexposure received when personnel monitoring equipment was not utilized. The Chief, Safety Office, ECOM, will in turn notify Commanding Officer, MEDDAC, or his representative.

(8) Appoint a Radiological Protection Officer.

d. All supervisors of users of radiation sources (e.g., Laboratory directors, technical area chiefs, team leaders, etc.,) will:

(1) Insure compliance with the requirements of this regulation.

(2) Insure control and posting of radiation areas in accordance with appendix A to this regulation.

(3) Provide appropriate exposure measuring devices (dosimeter, film badges, etc.) protective clothing and respirators for personnel working in radiation areas.

(4) Insure that proper storage facilities and arrangements for handling all radioactive materials are provided according to criteria and procedures set forth in appendix B to this regulation.

(5) Notify, through the organization RPO, the Chief, Safety Office, ECOM:

(a) When a radioactive source or ionizing radiation producing device is being moved onto or from Fort Monmouth if the source is 5 curies or stronger, or in the case of special nuclear material if it is more than 5 pounds.

(b) When deviation from approved procedure or planned schedules could involve radiation safety. If in the judgment of the organization RPO it is not likely that overexposure or contamination spread will occur, the Chief, Safety Office, ECOM, need not be notified.

(c) Immediately, in the event of any accident/incident involving a potential overexposure of personnel or release of radioactive contamination that might result in overexposure of personnel.

e. All personnel who possess, use, or handle sources of ionizing radiation will be responsible for:

(1) Knowing and following standing operating procedures, rules, and special instructions.

(2) Using safety equipment properly.

(3) Reporting to the supervisor any accident, unusual incident, personal injury, however slight; suspected overexposure and/or suspected internal exposure; as soon as possible after the occurrence.

f. The Commanding Officer, US Army Medical Department Activities (MEDDAC), will be responsible for providing medical assistance and advice as established by AR 40-4 and 40-5, and in addition will be responsible for the following:

(1) Insuring safe condition and safe operation of X-ray machines used for dental and medical diagnostic and treatment purposes.

(2) Posting personnel radiation exposure records as prescribed in AR 40-14, and paragraph 1a(1) of appendix A.

(3) Making reasonable effort to obtain prior radiation exposure records of new personnel.

g. Chief, Transportation Division, HISA, is responsible for insuring that shipping procedures (as delineated in para 8 of app B) are followed.

7. <u>References</u>. a. Title 49, Code of Federal Regulations - Transportation

b. AR 55-55

c. TM 55-315

Appendix A

STANDARDS FOR RADIATION EXPOSURES AND CONTAMINATION

The following guides are based on the recommendations of the Federal Radiation Council, the National Committee on Radiation Protection, the International Commission on Radiological Protection, and the regulations of the AEC and the US Army.

a. Radiation Protection Guides (RPG) for External Exposure

(1) Occupation

(a) When any person accepts employment in radiation work, it shall be assumed that he has received his age-prorated dose up to that time unless satisfactory records show to the contrary, or it can be satisfactorily demonstrated that he has not been employed in radiation work. The assumed exposure for calendar quarters prior to 1 January 1961, shall be 3750 millirem (mrem) and 1250 mrem after 1 January 1961. A reasonable effort will be made to obtain reports of previously accumulated occupational dose. This is not to imply that such an individual should be exposed to routinely accept exposures at radiation levels approaching the quarterly maximum of 1250 mrem up to the time he receives his age-prorated limit.

(b) The exposure limit to the whole body, head and trunk, active blood forming organs, lens of eyes, or gonads is 1250 mrem per calendar quarter. With the approval of Commanding General, ECOM, the weekly, quarterly, and yearly exposure limits for these critical body parts may be increased to 3000 mrem per quarter if the individuals total exposure does not exceed 5000 (N-18) mrem where N is the age at last birthday and is greater than 18 years. The following guides for external exposure are applicable.

RADIATION EXPOSURE GUIDE

EXPOSURE PERIOD	CRITICAL BODY PARTS	SKIN	HANDS AND FOREARMS FEET OR ANKLES
Weekly	100 mrem	600 mrem	1500 mrem
Quarterly	1250 mrem	7500 mrem	18750 mrem
Yearly	5000 mrem	30000 mrem	75000 mrem
Accumulated	5000 (N-18) mrem		

(2) General Population. Ionizing radiation exposure limits to individuals of the general population shall be 500 mrem per year.

(3) Medical Dose. Radiation exposure resulting from necessary diagnostic and therapeutic medical and dental procedures need not be included in the determination of the radiation exposure status of the individual concerned.

Appendix A--Continued

b. RPG for Airborne Activity

(1) Restricted Area. Concentration above natural background of radioactive material in breathing air in restricted areas shall not exceed levels listed in 10CFR 20, appendix B, table 2.

(2) Unrestricted Area. Concentration above natural background of radioactive materials in air in unrestricted areas shall not exceed levels listed in 10CFR 20, appendix B, table 2.

c. Radiation Protection Guide (RPG) for Waterborne Activity. Concentration of waterborne radioactive materials above natural background released to unrestricted areas shall not exceed the limits listed in 10CFR 20, appendix B.

d. Radiation Surface Contamination Guide. The surface contamination limits as specified in AMCR 385-25 apply to items and areas to be released for unrestricted use without prior approval of Chief, Safety Office, ECOM.

e. Respiratory Protection Equipment Guides. The following respiratory protection will be used by personnel in an atmosphere with the indicated particulate radioactive contamination:

Alpha	10^{-12}	µCi/cc	None
	10^{-8} to 10^{-12}	µCi/cc	Military Mask M9A/or equiv
	10^{-8} or higher	µCi/cc	Supplied Air Mask
Beta-gamma	10^{-10}	µCi/cc	None
	10^{-6} to 10^{-10}	µCi/cc	Military Mask M9A/or equiv
	10^{-6} or higher	µCi/cc	Supplied Air Mask

f. Area Delineation and Posting

(1) Radioactive Material Storage Containers and Areas. Areas and containers that require posting in accordance with 10CFR 20 will be posted with a magenta and yellow sign bearing the radiation symbol and the words "CAUTION-RADIOACTIVE MATERIALS."

(2) Radiation Area. A radiation area is any area accessible to personnel with a radiation level such that a major portion of the body could receive in any one hour a dose in excess of 5 mrem, or in any 5 consecutive days a dose in excess of 100 mrem. It will be posted with a magenta and yellow sign(s) bearing the radiation symbol and the words "CAUTION-RADIATION AREA."

Appendix A--Continued

(3) High Radiation Area. A high radiation area is any area accessible to personnel in which there exists radiation of such level that a major portion of the body may receive in any one hour a dose in excess of 100 mrem. It will be conspicuously posted with a magenta and yellow sign(s) bearing the radiation symbol and the words "CAUTION-HIGH RADIATION AREA."

(4) Airborne Radioactivity Area. An airborne radioactivity area is any area in which airborne radioactive material is present in concentrations in excess of the amounts specified in appendix B, table 1, column 1 of 10CFR 20, or any area where airborne radioactive material is present in concentrations which, if averaged over the number of hours in any week during which individuals are in an area, exceed 25 percent of the amount specified in 10CFR 20, appendix B, table 1, column 1. These areas will be conspicuously posted with a magenta and yellow sign bearing the radiation symbol and the words "CAUTION-AIRBORNE RADIOACTIVITY AREA."

(5) Contaminated Area or Item. A contaminated area or item is any area or item where contamination levels exceed those referred to in paragraph d above, they shall be posted with appropriate signs or tags.

(6) Temporary Area Identification. Radiation roping or ribbon (yellow and magenta) will be used with warning signs whenever possible for the temporary delineation of radiation, contamination, or airborne radioactivity areas. Where noncolored or different colored rope or barrier are substituted, sufficient signs will be used with the barrier so there will be a clear understanding of the nature of the hazard existing beyond the barrier.

Appendix B

PROCEDURES FOR CONFORMANCE WITH RADIATION STANDARDS

1. General. To conform with the radiation standards as established by this regulation, contractors and users involved in operations dealing with ionizing radiation sources will comply with the following requirements:

a. A copy of documents and required information listed below will be submitted through the organization RPO to Chief, Safety Office, ECOM, at least 2 weeks prior to arrival at Fort Monmouth of radioactive materials and/or machines or devices producing ionizing radiation.

(1) Legal documents authorizing the contractor or agency to own, maintain, and use such materials, sources, devices and assemblies. Examples of such documents are AEC by-product material licenses, AEC source material licenses, and DA authorizations or permits.

Appendix B--Continued

(2) Information concerning radioactive materials and radiation producing machines or devices to include the type, description, and quantity of radioactive materials and the location for storage and use. The detailed description should include the following as applicable:

(a) Manufacturer of the source.

(b) Date of initial source activity determination.

(c) Source identification number.

(d) Cross-sectional sketch showing dimensions.

(e) Source holder material of construction.

(f) Source form (powder, plated, foil, etc.)

(g) Chemical form (metal, oxide, titanate, etc.)

(h) Strength in curies or millicuries as of date of initial source activity determination.

(i) Type of protective cover material or film (if any) over the source.

(j) Date and result of last leak test.

(k) Method of sealing against leakage.

(3) Location and name of responsible individual (or custodian) and licensed organization assigned to supervise handling of radioactive material.

(4) Intended use and operating procedures. Operating procedures will delineate radiological hazard controls in accordance with applicable sections of this regulation. Changes to procedures must be submitted to the Chief, Safety Office, ECOM.

b. Unattended radioactive material will be secured against unauthorized access and handling at all times.

c. Radiation workers who enter a radiation area must wear a film badge. An exposure record must be maintained for each individual.

d. Protective clothing, where required, must be donned prior to entering the radiation area.

e. Radiation areas will be posted and controlled.

f. Subordinate organization's radiological safety programs for the use of sources of radiation must conform to the minimum standards described herein.

Appendix B--Continued

g. All supervisors involved in operations where ionizing radiation is present will, as soon as practicable, notify the Chief, Safety Office, ECOM, if any of the following incidents occur on Fort Monmouth.

(1) Damage to, or malfunction of equipment or exhaust systems, during operations, in areas where these items are required by approved operating procedures.

(2) Doisemeter readings in excess of 100 mrem in any one day or self-reading dosimeters.

(3) Spilled, or unintentionally released, radioactive material that might result in overexposure of personnel.

(4) Wounds resulting in a break of the skin or other incidents where radioactive material may have entered a person's body. Such incidents will also be reported to Commanding Officer, MEDDAC, or his representative.

(5) Fire, disaster, or other emergency in areas where radioactive material is being stored or used.

(6) Except RD&E Directorate, loss of personnel monitoring device or exposure while not utilizing device.

h. Supervisors of individuals will insure that the individuals working in a radiation area will perform their assigned tasks in a manner to minimize their internal and external exposures.

i. Users will clean up any radioactive contamination resulting from their work.

2. Radiation Area Identification and Access Control. a. Posting of Radiation Areas

(1) Storage, radiation, high radiation, airborne radioactivity and contaminated areas as defined in paragraph f, appendix A, will be posted with appropriate signs, tags, and labels bearing the standard radiation warning symbol.

(2) Control instructions will be conspicuously posted at the entrances to a restricted area. Persons entering a restricted area will be briefed, as required by area operation plans, concerning any limited worktime, contamination control techniques, protective clothing needs, and personnel monitoring devices.

b. Personnel entering a radiation area on a nonroutine basis will obtain personnel monitoring device(s) and protective clothing from the responsible organization as required.

Appendix B--Continued

3. Radiological Contamination Control. a. Routine and continuous operations will not be conducted in areas where contamination levels exceed the values listed in paragraph d, appendix A, without approval of Chief, Safety Office, ECOM, except as conducted by RD&E Directorate RPO.

b. At any time allowed contamination levels are exceeded the following action will be taken by the user:

(1) Terminate activity within the area; advise security guards.

(2) Control access to the area until released by the RD&E Directorate RPO or the Chief, Safety Office, ECOM.

4. Waste Disposal. Radioactive wastes include unusable or unwanted radioactive items or material and items contaminated with radioactive materials. Waste material will be disposed of by methods consistent with all applicable regulations (i.e., AR 755-15, 10CFR 20) and accepted radiation protection practices.

5. Radiation Exposure Control. a. The amount of exposure to ionizing radiation that a worker is allowed to receive in any period of time is limited. For licensed materials, these limits are set by the licensing authority. For unlicensed sources of radiation, the recommendations of the National Committee on Radiation Protection and the Federal Radiation Council will be followed. Exposure guides are specified in appendix A.

b. Exposure Records. Radiation exposure records will be completed and maintained for each individual required to work in a radiation area.

c. Exposure Monitoring. Film badges will be used as the primary device for personnel exposure monitoring.

(1) Radiation workers who enter a radiation area must wear a film badge.

(2) Radiation monitoring will be assured for all nonradiation workers entering a radiation area.

(3) Pocket dosimeters in addition to film badges will normally be worn in areas where the anticipated dose will exceed 20 mrem per shift and by personnel engaged in radiographic operations. Pocket dosimeters issued will be recorded on a pocket dosimeter record.

(4) Personnel monitoring devices shall never be tampered with, or falsely exposed to radiation.

Appendix B—Continued

6. Emergency Procedures. a. General. The emergency phase begins when any accidental release, escape, or spill of radioactive materials occur in such an amount that a health hazard, or possibility of damage to valuable property exists. This phase extends through the completion of efforts to save life, prevent serious injury, or prevent further damage to valuable property. If a release of radioactive material occurs, the following basic emergency plan should be carried out:

(1) Shut down all operations which would be hazardous if unattended.

(2) Evacuate personnel from the emergency area to an assembly area where minimum radiation exposure is possible.

(3) Make an accounting of all personnel from the emergency area at the assembly area to insure complete evacuation.

(4) Notify the Chief, Safety Office, ECOM, as soon as possible.

(5) Provide for communications, transportation, power, portable radiation detection equipment, first-aid supplies, and decontamination apparatus at the assembly area, as required.

(6) Check all personnel involved for possible contamination and segregate personnel who are contaminated.

(7) Decontaminate personnel, equipment, and the emergency area.

(8) Prepare a complete written history of the incident.

b. In the event of emergency, specific actions as prescribed in chapter 10, TM 3-261, will be followed. Prescribed reports will be forwarded through the Chief, Safety Office, ECOM, ATTN: AMSEL-SF-H.

7. Storage. An area designated for the storage of radioactive material will conform to the following minimum standards:

a. It will be kept clean.

b. Fire protection devices or equipment will be readily available.

c. It will be capable of being secured against unauthorized entry.

d. Appropriate standard radiation sign will be posted.

e. When the area is left unattended, sources of radiation will be secured against unauthorized handling and/or individual exposure to penetrating radiation.

Appendix B--Continued

f. The names and telephone numbers of responsible individuals will be posted in a conspicuous location when the area is unattended.

g. At least one container enclosing the radioactive material should be fire resistant, preferably metallic.

8. Shipments. a. Incoming

(1) Immediately upon receipt of radioactive material, the activity Supply Officer, before opening the container, will notify the RPO.

(2) The shipment will be promptly monitored and logged in by a trained monitor.

(3) The radioactive material will then be delivered to the user or stored in a radioisotope storage vault, as circumstances warrant.

b. Outgoing

(1) Radioactive material to be shipped out will be monitored and logged in by the RPO before and after packaging.

(2) The outgoing shipment will be packaged and labeled to conform with Interstate Commerce Commission regulations and Department of Transportation regulations as well as those of the Surgeon General, AEC, Navy Ships Systems Command, and Army regulations.

(3) Shipments will be cleared with the Accountable Property Officer.

(AMSEL-SF)

FOR THE COMMANDER:

OFFICIAL:

W. I. RYERSON
Chief, HQ Spt Br

FRANK G. STILO
Colonel, GS
Chief of Staff

DISTRIBUTION:
M, P, O, and T plus

Chief, Safety Ofc 50

Changes in force: C1.

C1, ECOMR 385-9

HEADQUARTERS
UNITED STATES ARMY ELECTRONICS COMMAND
FORT MONMOUTH, NEW JERSEY 07703

ECOM REGULATION
No. 385-9
CHANGE 1

9 April 1974

Safety

IONIZING RADIATION CONTROL

ECOMR 385-9, 17 August 1973, is changed as follows:

Appendix C, pages 13 through 21, is added after appendix B.

(AMSEL-SF)

FOR THE COMMANDER:

FRANK G. STILO
Colonel, GS
Chief of Staff

OFFICIAL:

W. I. BYERSON
Chief, HQ Spt Br

DISTRIBUTION:
M, O, and T plus

Chief, Safety Ofc ...50

Appendix C

ECOM IONIZING RADIATION CONTROL COMMITTEE SOP
FOR AUTHORIZATION OF WORKERS, FACILITIES, AND SOURCES

1. Purpose. The purpose of this appendix is to establish procedures and minimum standards to be utilized by the ECOM Ionizing Radiation Control Committee (IRCC) and Radiological Protection Officers (RPOs) when considering authorization of radiation facilities, use of sources, and qualifications of radiation workers within ECOM and on Fort Monmouth. The procedures implement the requirements set forth in this regulation.

2. Scope. In conjunction with the basic regulation, the standards set forth are to be applied to all individuals working with or storing radioactive and ionizing radiation producing sources at Fort Monmouth, their supervisors, and the IRCC and RPOs (or their designated representatives) when evaluating applications for authorization of these individuals, facilities, or sources (of ionizing radiation).

3. Records and Administration. a. The IRCC will ordinarily meet at least once each quarter. Each meeting will be at the call of the committee chairman or at the call of the commander's representative. A quorum will consist of 50 percent of the appointed members or their official alternate.

b. The committee secretary will record all actions of the committee and maintain the record file of the minutes of the committee meetings. All applications and other matters acted upon by the committee will become part of the minutes, this includes matters acted upon for the IRCC by individual organization RPOs. The IRCC meeting minutes will be published and distributed to IRCC members within 30 days following the meeting.

c. Applications must reach the IRCC committee members at least 15 days prior to the IRCC meeting so that all voting members will have sufficient time to become familiar with the applications prior to the meeting. These applications will be processed through the appropriate RPO, who will forward the application through the IRCC Secretary to the IRCC members upon his review and approval (para 6). The IRCC secretary will forward applications that have been acted on by the committee to the appropriate RPO with the committee action.

4. Minimum Standards. The following standards are to be used as a guide for the IRCC and the RPOs in considering authorization of radiation workers, sources, and facilities. Obviously, the greater the hazard, the more stringent the requirements must be. When the minimum requirements listed below are met, a majority vote of the IRCC members in attendance is required for approval. In special cases, when it is determined that the situation warrants either waiver or substitution of the minimum standards, a three-fourths approval vote of the IRCC members in attendance is required.

Appendix C--Continued

a. Minimum Standards for Radiation Workers.

(1) For use of small sealed sources (beta-gamma sources of 10 microcuries or less).

(a) Familiarization with the sources to be used and the applicable protection standards, equipment, and procedures.

(b) A briefing by the appropriate RPO, or his designated representative, on regulatory requirements and emergency procedures.

(c) Use of the source or representative source for 1 hour under the direct supervision of an authorized radiation worker, the appropriate RPO or his designated representative.

(2) For use of large sealed sources (beta-gamma sources greater than 10 microcuries and less than 10 millicuries).

(a) The minimum requirements stated in a(1) above.

(b) Formal radiation safety courses or 1 year's experience using radiation sources.

(3) For use of licensed alpha emitting material (less than 10 millicuries).

(a) Check sources licensed under commodity licenses may be used by anyone authorized by the commodity license. This also pertains to commodity DA authorizations.

(b) The minimum requirements stated in a(1) above.

(c) Special safety instruction on alpha radiation hazards (Example: eye and internal).

(4) For use of X-ray generating units and devices.

(a) The minimum requirements stated in a(1) above.

(b) Demonstration to the satisfaction of the appropriate RPO that the operator understands radiation leakage, the use of shielding, and the correct safety procedures specifically applicable to X-ray generating units and devices.

(5) For use of unsealed sources, sealed sources larger than 10 millicuries, accelerators, and other major sources.

(a) The minimum requirements stated in a(1) above.

Appendix C--Continued

(b) Other special requirements to be determined by the appropriate RPO and approved by the IRCC.

NOTE. In all cases, the requirements of the specific or general AEC license for the particular source or device must be met.

b. Minimum Standards for Radiation Facilities and Sources.

(1) Permissible levels of radiation in unrestricted areas.

(a) Radioactive material and other sources of radiation shall be possessed and used in such a manner that they are not likely to cause any individual to receive a dose to the whole body in any period of one calendar year in excess of 0.5 rem.

(b) Radioactive material and other sources of radiation shall not be possessed, used, or transfered in such a manner as to create in any unrestricted area:

1. Radiation levels which, if an individual were continuously present in the area, could result in his receiving a dose in excess of 2 millirems in any 1 hour, or

2. Radiation levels which, if an individual were continuously present in the area, could result in his receiving a dose in excess of 100 millirems in any 7 consecutive days.

(2) All radiation facilities and sources will have warning radiation signs posted as follows:

(a) All devices and equipment capable of producing X-rays when energized shall be appropriately posted with a sign bearing the ionizing radiation symbol and the words, "CAUTION - THIS EQUIPMENT PRODUCES X-RAYS WHEN ENERGIZED."

(b) Each radiation area (in general, an area where a major portion of the body can receive more than 5 mrem in 1 hour) will be conspicuously posted with a sign or signs bearing the ionizing radiation symbol and the words, "CAUTION - RADIATION AREA."

(c) Each high radiation area (in general, an area where a major portion of the body can receive more than 100 mrem in 1 hour) will be conspicuously posted with a sign or signs bearing the ionizing radiation symbol and the words, "CAUTION - HIGH RADIATION AREA."

(d) An area, room, or enclosure containing airborne radioactive material, as defined in 10CFR 20, section 20.203(d), will be conspicuously posted with a sign or signs bearing the ionizing radiation symbol and the words, "CAUTION-AIRBORNE RADIOACTIVITY AREA."

Appendix C--Continued

(e) Each area or room which contains radioactive materials in excess of the amount specified by 10CFR 20, section 20.203, will be posted with a sign or signs bearing the ionizing radiation symbol and the words, "CAUTION . RADIOACTIVE MATERIAL(s)."

(f) Caution signs are not required to be posted at areas or rooms containing radioactive materials for periods of less than 8 hours, provided the materials are constantly attended by an individual qualified to take the precautions necessary to prevent the unauthorized exposure of personnel.

(3) Special shielding and suitable portable shields will be used to minimize radiation exposure to operating personnel.

5. Submission of Applications. No radiation source will be procured or used within Fort Monmouth without a radiation facility or source authorization. Applications for radiation worker authorizations and radiation facility or source authorizations will be forwarded to the IRCC through the organization RPO.

a. The following information will be included in an application for radiation worker authorization:

(1) Name.

(2) Social security number.

(3) Organization.

(4) Facilities for which authorization is requested.

(5) Sources for which authorization is requested.

(6) Scientific training and experience.

(7) Training and experience in the following areas, to include where trained, duration of training, and whether training consisted of on-the-job or a formal course.

(a) Principles and practices of radiation protection.

(b) Radioactivity measurement standardization and monitoring techniques and instruments.

(c) Mathmatics and calculations basic to the use and measurement of radioactivity.

(d) Biological effects of radiation.

Appendix C--Continued

(8) Experience with actual use of radiation sources, to include isotope, maximum amount, where experience was gained, duration of experience, and type of use.

(9) Record of radiation exposure history.

NOTE: Applications to allow authorized radiation workers to use new sources of facilities need not include previously submitted information if the previous application, its date, and specific paragraphs are referenced.

b. The following information will be included in an application for radiation facility or source authorization:

(1) Location of facility or source (to include building and room or field area).

(2) Supervisor, his office, and home telephone numbers.

(3) Sources which will be used in the facility.

(4) Description of facility, to include sketch giving dimensions, doors, windows, neighboring areas, special shielding, etc.

(5) Signs which will be posted.

(6) Location of phones in and near the facility.

(7) Special provisions for control of access, if necessary.

(8) A copy of standing operating procedures.

6. Processing of Applications. The following describes the actions of an RPO upon receipt of applications for radiation workers, facilities, and sources:

a. Application for Radiation Workers.

(1) Determine if worker's training and experience meets minimum standards.

(2) Give directions for training or supervise training for worker if training is required.

(3) Brief the worker on appropriate regulations and procedures within the Fort Monmouth Ionizing Radiation Protection Program, or insure that such a briefing is conducted.

(4) Submit application to IRCC with recommendations on courses of action.

(5) If the IRCC approves, forward an appropriate Radiation Worker Authorization (fig 1) to the worker's supervisor, place the worker on the dosimetry program, and set up records on the worker's training and experience.

Appendix C--Continued

Name:

SSN:

Organization:

Facilities authorized to use:

Sources authorized to use or operate:

Conditions:

Approval for the IRCC:

Signed

Figure 1. Sample of Radiation Worker Authorization.

Appendix C--Continued

(6) If the IRCC disapproves, forward a detailed explanation to the supervisor. If the disapproval is due to lack of training and experience, give information on what is required for approval and how the worker can gain additional experience.

(7) At his option, approve radiation workers for the IRCC under the following conditions:

(a) For sources of 10 μCi or less, if the worker meets the minimum training and experience requirements of paragraph 4a(1) above.

(b) For standard industrial and medical X-ray units and electron microscopes, if the worker meets minimum training and experience requirements of paragraph 4a(4) above, such workers may only use radiation facilities and devices for which they are authorized.

(8) At his option, issue temporary (not to exceed 100 days) authorizations in the following instances:

(a) To personnel working under the direct supervision of an authorized worker in any facility and with any source for which the supervising worker is authorized. Such personnel will be initially briefed by the RPO or his designated representative. The supervising worker is responsible for insuring that the temporary worker wears appropriate personnel dosimetry devices, operates in a safe manner, and follows regulations and standard procedures.

(b) To any radiation worker already authorized to work in facilities or with sources of comparable or greater hazard once he has demonstrated to the RPO, or his designated representative, competence to use the new facility or source.

(c) To any personnel required to give assistance in an emergency situation. Such authorization may be verbal. The RPO will submit a full written explanation of circumstances and hazards involved to the IRCC in his report on the incident if such personnel may have been exposed to excessive radiation or more than permissible concentrations of radioactive material.

b. Application for Radiation Facility.

(1) Determine if facility will meet minimum standards and determine other requirements necessary to minimize exposure to operating personnel.

(2) Determine and request additional information needed for proper evaluation.

(3) Submit application to IRCC with recommendation on course of action.

Appendix C--Continued

(4) If the IRCC approves the application, the approval will be conditional until the RPO surveys the new facility with the source of radiation in storage and under operating conditions.

(5) After the initial survey, forward an appropriate Radiation Facility Authorization (fig 2) to the requesting supervisor and record all actions.

(6) At his option, approve new facilities for the IRCC for transfer of authorized radioactive sealed sources or X-ray machines to a new facility if:

(a) Special wall shielding, in addition to the structural components of the facility, is not required to reduce radiation levels below uncontrolled area limits outside the facility.

(b) Appropriate warning signs are posted.

(c) The RPO or his designated representative performs an initial survey on the new facility.

c. Procurement and Use of Radiation Sources.

(1) Determinie if source requires amendment of an AEC license or DA authorization.

(2) Evaluate degree of hazard and recommend special training for users and special facilities if needed.

(3) Determine what additional information is needed for evaluation, to include applications for worker and facility authorizations as necessary.

(4) Request additional information as needed.

(5) Submit application to IRCC with recommendation on course of action.

(6) Maintain a file of actions taken by the IRCC. Inform requester of actions taken and of special requirements.

NOTE: If a license or authorization amendment is required, it is often better to obtain conditional approval of the IRCC prior to preparing the application for amendment.

Appendix C--Continued

Location:

Supervisor:

Supervisor's office extension: Home Phone:

Authorized sources:

Authorized workers:

Conditions:

Approval for the IRCC:

Signed

Figure 2. Sample of Radiation Facility/Source Authorization

DIRECTORATE
RESEARCH, DEVELOPMENT, AND ENGINEERING
UNITED STATES ARMY ELECTRONICS COMMAND
FORT MONMOUTH, NEW JERSEY 07703

RDE/L POLICY MEMORANDUM
Technical No. 1

3 June 1974

RADIATION PROTECTION

1. POLICY. a. It is the policy of the Director that radiation sources be used in a fashion which will protect personnel from unwarranted radiation exposure.

b. Radiation sources will be used with the understanding that their procurement and utilization shall be in accordance with RD&E Radiation Safety Procedures (copy attached). Any questions concerning the interpretation of procedures will be brought to the attention of the RD&E Radiological-Protection Officer (RPO) for assistance and guidance.

2. DISCUSSION. a. These procedures apply to all RD&E organizational units and individuals who procure, possess, use, store, transfer, or dispose of radiation sources, i.e., radioactive material with an activity of one microcurie or greater, and ionizing radiation producing devices.

b. Responsibilities and procedures governing the radiation protection program are described in the inclosure.

3. REFERENCES. a. Code of Federal Regulations, Title 10.

b. AR 40-14.

c. AR 700-52.

d. AMCR 385-25.

e. AMCR 385-29.

e. ECOMR 385-9.

ROBERT S. WISEMAN
Director, Rsch, Dev & Engrg and
Director of Laboratories

DISTRIBUTION:
RD&E Staff, Divisions,
and Laboratories

RESEARCH, DEVELOPMENT, AND ENGINEERING DIRECTORATE

RADIOLOGICAL SAFETY PROCEDURES

Responsibilites and procedures governing the radiation protection program within RD&E are described herein. Any questions concerning the interpretation of procedures should be brought to the attention of the RD&E Radiological Protection Officer, telephone extension 61292.

CONTENTS

CHAPTER 1

Responsibilities

1. The Director of RD&E is responsible for establishing an effective RD&E Radiation Protection Program. For this purpose he will appoint a Radiation Protection Officer to assist him and act in an advisory capacity and coordinate safety policies and procedures among various users of radiation sources.

2. The RD&E Radiation Protection Officer is responsible for:

a. Staff supervision of the Radiation Protection Program including authority to order temporary suspension of hazardous operations.

b. Advising the Director on the degree of hazards associated with ionizing radiation and the effectiveness of measures to control these hazards.

c. Performing inspections to insure compliance with provisions of AEC licenses and applicable Army regulations.

d. Maintaining the RD&E inventory of radiation sources and radioactive materials, including both materials licensed by AEC and those requiring DA authority.

e. Coordinating purchases of radioactive material to assure compliance with AEC licenses or DA authority.

f. Representing RD&E on the ECOM Ionizing Radiation Control Committee.

g. Coordinating submittal of applications for renewal or amendment of AEC licenses and DA authorization and for issuing local permits to use radiation sources.

h. Maintaining a library of current regulations pertinent to the RD&E Radiation Protection Program which will be furnished on request to persons covered by this regulation.

3. The RD&E Safety Officer is responsible for providing assistance and advice on general safety matters in relation to the radiological safety programs.

4. The Chief, Equipment Management Division, RDTSA, is responsible for assuring that all purchases for items containing radioactive material, X-rays, lasers, or other radiation sources have been cleared through the Radiation Protection Officer.

5. The Chief, Equipment Management Division, RDTSA, is also responsible for prompt notification of the RD&E Radiation Protection Officer when radiation sources are received. Items will be picked up by the user after check by the RD&E Radiation Protection Officer.

6. Supervisors in areas where radiation sources are used are responsible for:

a. Insuring that local permits are obtained before any work with radiation sources begins.

b. Insuring that the purchase or use of radiation sources are coordinated with the Radiation Protection Officer.

c. Insuring that all requisitions or contracts requiring radioactive material or other sources of radiation are clearly marked as "documents for procurement of radiation sources" and that these requisitions are coordinated with the Radiation Protection Officer.

d. Providing training of new employees in the safe handling of radiation sources.

7. Workers in areas where radiation sources are used are responsible for strict compliance with procedures approved for the specific application. These procedures and limitations will be contained in the application for a local permit.

CHAPTER 2

Definitions

Accelerator	A device for imparting kinetic energy to charged particles, such as electrons, protons, deuterons and helium ions.
Airborne radioactive material	Any radioactive material dispersed in the air in the form of dusts, fumes, mists, vapors or gases.
Byproduct materials	Any radioactive material (except special nuclear material) yielded in or made radioactive by exposure to the process of producing or utilizing special nuclear material.
Contamination (Radioactive)	Deposition of radioactive material in any place where it is not desired, and particularly in any place where its presence can be harmful. The harm may be in invalidating an experiment or a procedure, or in actually being a source of danger to persons.
Decay, Radioactive	The disintegration of the nucleus of an unstable nuclide by the spontaneous emission of charged particles and/or photons.
Decontamination Factor	The ratio of the amount of undesired radioactive material initially present to the amount remaining after a suitable processing step has been completed. A factor referring to the reduction of the gross measurable radioactivity.

Dose (Dosage)	The radiation delivered to a specified area or volume or to the whole body. The dose may be specified in air, or the skin, or at some depth below the surface, but no statement of dose is complete without specification of location.
Dose Equivalent (DE)	This is the product of absorbed dose (D), quality factor (QF), and other factors needed to achieve the common exposure scale referred to under the definition of Quality Factor.
Dose Rate	Radiation dose delivered per unit time.
Dosimeter	An instrument used to detect and measure an accumulated dose of radiation.
Dpm	Disintegrations per minute.
Gamma Ray	Electromagnetic radiation emitted by a nucleus as a result of a transition between two nuclear energy levels. Gamma rays have high energies with correspondingly short wavelengths and their ability to penetrate matter is high.
Health Physics	A term in common use for that branch of radiological science dealing with the protection of personnel from harmful effects of ionizing radiation.

Ionizing Radiation	Any electromagnetic or particulate radiation capable of producing ions, directly or indirectly, in its passage through matter.
Ionizing Radiation Producing Devices	Electronic devices which are capable of generating ionizing radiation such as X-ray machines, linear accelerators, cyclotrons, radio frequency generators which use klystrons, magnetrons, or other tubes which produce x-rays, and electron microscopes.
Isotope	One or more nuclides having the same atomic number but a different mass. Isotopes of a substance have almost identical chemical properties.
Monitoring	Periodic or continuous determination of the amount of ionizing radiation or radioactive contamination present in an occupied region. Also called surveying.
MPC	Maximum permissible concentrations.
mRad	Millirad
mRem	Millirem
Neutron	An elementary uncharged nuclear particle which has a mass equal to that of a hydrogen atom.
Photon	A quantity of electromagnetic energy whose value in ergs is the product of its frequency in hertz per second and Planck's constant.

Planck's Constant	A natural constant of proportionality (h) relating the frequency of a quantum of energy to the total energy of the quantum. $h=6.624 \times 10^{-27}$ erg-sec.
Positron	A particle equal in mass to the electron and having an equal but positive charge.
Quality Factor (QF)	This is the linear-energy-transfer-dependent factor by which absorbed doses are to be multiplied to obtain, for purposes of radiation protection, a quantity that expresses on a common scale for all ionizing radiations the effectiveness of the absorbed dose.
Radiation	Energy propagated through space. As used in this regulation, the term refers to two kinds of ionizing radiation: 1. Electromagnetic waves (x-rays, gamma rays) and 2. Corpuscular emissions from radioactive substances or other sources (alpha and beta particles). Ionizing radiation is any electromagnetic or particulate radiation capable of producing ions, directly or indirectly in its passage through matter.
Radiation Absorbed Dose (Rad)	The amount of dose imparted to matter by ionizing radiation per unit mass of irradiated material. The unit of absorbed dose, the Rad, is equivalent to 100 ergs/gram.

Radiation Hazard	A condition under which persons might receive radiation in excess of the applicable maximum permissible dose, or where radiation damage might be caused to materials or personnel.
Radiation Sources	Materials or devices which generate or are capable of generating ionizing radiation, including naturally occuring radioactive material, byproduct materials, source materials, special nuclear materials, fission products, materials containing induced or deposited radioactivity, radiographic and fluoroscopic equipment, particle generators and accelerators, and electronic equipment which utilizes klystrons, magnetrons, or other electron tubes which produce x-rays.
Radioactivity	Process whereby certain nuclides undergo spontaneous disintegration, liberating energy through the emission of alpha or beta particles or gamma photons or a combination of these.
Radiological Survey	Evaluation of the radiation hazard incident to the production, use, or existence of radioactive materials or other sources of radiation under a specific set of conditions.

Restricted area	Any area to which access is controlled for purposes of protection of individuals from exposure to radiation and radioactive materials.
Roentgen	The quantity of X or gamma radiation such that the associated corpuscular emission per 0.001293 gram of air (1cc of dry air at standard conditions) produces, in air, ions carrying 1 electrostatic unit or quantity of electricity of either sign. This is the special unit of exposure.
Roentgen Equivalent Man (REM)	This is the unit of dose equivalent (DE) and is commonly referred to as the roentgen equivalent mammal.
Special Work Permit	A permit to assure that no work will commence in areas where radiation is greater than 20 mrem/hr until each job has been properly evaluated from a radiological standpoint and has been approved by Health Physics personnel.
X-ray	Penetrating electromagnetic radiation having wavelengths shorter than those of visible light. X-rays are similar to gamma rays, but are originating in the extra-nuclear origin.

CHAPTER 3

Exposure Guides

1. Regulations. Requirements as set forth in Title 10, Parts 19 & 20, Code of Federal Regulations, and AR 40-14 for the Control of Occupational Exposure to Ionizing Radiation, will be followed. Recommendations in the National Bureau of Standards Handbooks on Radiation will be used in addition.

2. Exposure of individuals in controlled areas. a. A controlled area is any area in which the exposure of personnel to radiation or radioactive materials is under the supervision of a radiation protection officer. Every effort will be made to maintain radiation doses as low as possible. Avoid all unnecessary exposure to ionizing radiation. Radiation protection standards for the control of occupational exposures to ionizing radiations include the following:

(1) The accumulated dose of radiation to the whole body, head and trunk, active blood-forming organs, gonads, or lens of the eye shall not exceed:

(a) 3 rem in any calendar quarter, nor 1.25

(b) 5(N-18) rem total lifetime dose, where N equals the present age in years.

(2) The accumulated dose of radiation to the skin of the whole body or the thyroid shall not exceed:

(a) 10 rem in any calendar quarter, nor 7.5

(b) 30 rem in any calendar year.

(3) The accumulated dose of radiation to the hands and forearms or the feet and ankles shall not exceed:

(a) 25 rem in any calendar quarter, nor 18.75

(b) 75 rem in any calendar year.

b. Members of the general public, personnel not occupationally exposed, and persons who are less than 18 years of age will not be exposed in any calendar quarter in excess of 0.125 rem or in excess of 0.55 rem in any calendar year. Pregnant women will not be exposed to occupational doses of ionizing radiation. When a female employee becomes aware of her pregnancy, she will request that her duties be changed to eliminate all occupational exposure to ionizing radiation. 0.5

c. Occupational exposure to radioactive concentrations in air or water may not exceed the limits set forth in Title 10, Part 20 of the Code of Federal Regulations.

3. Exposure of individuals in uncontrolled areas. Radioactive materials and other sources of ionizing radiation will not be possessed, used, or transferred in such a manner as to create in an uncontrolled area radiation levels which, if an individual were continuously present in the area, could result in his receiving a dose in excess of 0.5 rem in one calendar year.

4. Limits for contamination. When hands, body surfaces, clothing, or shoes become unavoidably contaminated, steps will be taken as soon as possible to remove loose contamination. Decontaminate hands and body surfaces until no detectable activity above background is observed. Some degree of fixed contamination in certain cases cannot be avoided and the following maximum limits are recommended for personal clothing and shoes (see Chapter 6):

Alpha activity - 200 disintegrations per minute per 100 square centimeters of area.

Beta-gamma activity - 0.2 millirad per hour at 2 centimeters.

5. Concentrations of radioactive contamination surfaces. a. Loose contamination on exposed surfaces such as bench tops and floors will be removed as soon as possible. Small amounts of fixed contamination will be unavoidable at times, but the degree of such contamination should be kept as low as practicable. Maximum limits of fixed contamination of 1000 dpm per 100 cm^2 of alpha and 2 mrad/hr at 2 cm of beta-gamma are recommended for controlled areas. Amounts of contamination in excess of the above limits will not be permitted to remain on exposed surfaces without approval of the RPO. Higher levels of contamination may be permitted for restricted surfaces, that is in areas where entry or access is controlled by procedures or special work instructions. The same standards of contamination control shall apply to tools and equipment. In all cases, signs and controls for contaminated surfaces, areas, or equipment will be instituted to the extent necessary to prevent the occurrence of a health hazard or the spread of contamination. In no case will the levels result in exposure to individuals in excess of the established limits. Any material or equipment so contaminated will be properly labeled with a contamination tag giving:

(1) Type and level of radiation (mrad/hr) at a specified distance.

(2) Extent of contamination on surfaces.

b. No contaminated equipment or material may be removed from any area without prior notification and approval of the RPO. Any equipment or material to be maintained or handled in a clear area must be decontaminated according to the requirements set forth in Chapter 6, paragraph 6.

6. Radiation protection controls governing beta-gamma exposure. The following limits will be observed:

a. No individual without a special work permit will be permitted to work in a radiation control area where exposure levels are greater than 20 mrem/hr.

b. Any radiation area where exposure levels are greater than 100 mrem/hr shall be classified as a high-radiation area. An accurate exposure record will be maintained for each individual required to work in a high-radiation area. Based on pencil dosimeter reading, the record will contain the total cumulative exposure of the individual during the life of the special work permit.

c. The time during which any individual is exposed will be controlled so that exposure limits will not be exceeded.

7. Radiation protection controls governing alpha exposure. External exposure to alpha radiation is negligible, since the range of the alpha particles is less than the thickness of the layer of dead skin. Fume hoods will be used in conjunction with the long-lived alpha-emitting substances or other substances presenting a similar health hazard. In handling an unsealed alpha source, gloves or forceps afford adequate protection. Sealed alpha-neutron sources must be carefully handled to protect the integrity of the seal and prevent the spread of contamination. The prime hazard to consider is personnel contamination and the danger of ingestion or inhalation of airborne contamination. Fume hoods should have an absolute filter. The linear flow rate should be at least 100 ft/min. Airborne contamination levels will be determined as set forth in Chapter 6, paragraph 6.

CHAPTER 4

Local Permits

1. Local permits for the use of radiation sources are required. Applications for permission to use or store radioactive materials or sources of ionizing radiation will be submitted to the RD&E Radiation Protection Officer, AMSEL-RD-H.

2. Radioactive sources. Local permits for the use of radioactive materials will be issued only when an approved AEC license or DA authorization is available. Contractors will be issued a local permit based on an approved DA permit.

3. Application for local permits. The local permit must be obtained before procurement of the particular item(s). Each organization desiring to use a radiation source in RD&E will apply for a permit. Application will be on DF addressed to RD&E Radiation Protection Officer, AMSEL-RD-H, and will include the following information:

a. Organization.

b. User personnel and qualifications (include training and experience).

c. Type of radiation source.

d. Physical form of the radioactive material.

e. Number of sources required.

f. Quantity of radioactive material or power of radiation source.

g. Planned use of radiation source.

h. Radiation protection equipment.

i. Facilities where radiation source will be used.

j. Radiation protection program (SOP).

CHAPTER 5

Procuring, Shipping, and Receiving of Radiation Sources

1. Procurement. All requisitions or contracts for items that contain radioactive materials will be coordinated with the Radiation Protection Officer of RD&E. Each request for radiation sources will include a covering DF stating the need for the material and citing the local radiation permit where the sources will be used. Procurement of radioactive materials will not be initiated until proper coverage under an AEC license or DA authorization is issued.

2. Shipping. a. The user is responsible for the proper packaging and labeling of radioactive materials for shipping. The user will initiate DA Form 2791-R which will then be completed by the Radiation Protection Officer.

b. The user will provide the RD&E Radiation Protection Officer with the AEC license or DA authorization of the person who will receive the radioactive material.

3. Receiving. a. The RD&E Radiation Protection Officer will check all radioactive material when it arrives. He will complete all necessary shipping paperwork, then notify the user to pick up the radioactive material. Radioactive materials will not be transported in privately owned vehicles.

b. Upon receipt of radioactive material, the Radiation Protection Officer will perform a leak test, when required, and notify the user of the results of the leak test.

CHAPTER 6

Prevention of Radiation Hazards

1. Method. a. This appendix contains information on the prevention of radiation hazards and special precautions necessary to safely work with radioactive materials. The three methods of radiation hazard prevention are: Mechanical and chemical, medical, and monitoring. All personnel required to work in radiation hazard areas will be informed as to the function and use of each method.

b. Some methods of radiation hazard prevention involve the proper use of fire extinguishers, roping off and posting of areas, permanent and portable shielding, and the use of area-monitoring instrumentation.

c. Another method of radiation hazard prevention includes the protection of personnel by wearing some or all of the following items depending on the type of work: Disposable clothing, coveralls, plastic aprons, gloves, plastic shoe covers, and/or boots.

d. Decontamination materials include such things as the chemicals used to decontaminate personnel and laboratory equipment, waste containers, swabs or Kemwipes, paper - both absorptive and non-absorptive.

e. Prevention of radiation hazards is effected by the establishment of restricted areas, time limits for stay in danger zones, and the requirements to comply with exposure limits and other rules.

2. Procedures. a. Mechanical and chemical. (1) Film badge service will be initiated or discontinued by request to the RD&E RPO. An adequate supply of film badges will always be available for immediate use. Staff members who escort visitors to radiation areas are responsible for signing badges in and out for their visitors.

(2) Each person assigned a film badge will wear only the particular badge number assigned to him. Under no circumstances will badges be exchanged with another person. Film packs should never be removed from the badge or tampered with in any way.

(3) Personnel working in radiation areas must wear badges at all times while they are in such areas. These badges may be worn comfortably on the belt line or chest but they must never be covered by any other clothing or carried in pockets.

(4) All film badges will be kept in the assigned badge rack at the end of the work period. They will not be taken out of the building unless the outside specific duty or travel will be associated with an exposure to radiation.

(5) Film badges will be collected for exchange of film each month on the day specified on the assigned badge rack.

(6) Pocket dosimeters will be recharged as required. Additional pocket dosimeter will be maintained for visitors or persons whose routine does not require a permanently assigned film badge. These dosimeters will be signed for in a log, the dose will be recorded, and a notation will be made that the person wearing it was a visitor.

(7) All persons entering radiation areas will wear a dosimeter. People who are unfamiliar with the facility will be accompanied by responsible personnel acquainted with the facility.

(8) Fire extinguishers will be placed in conspicuous places in radiation areas and clearly marked. They will be periodically checked and maintained by the Area Fire Captain. Any extinguisher that is used will not be returned to its rack but will be reported to the Fire Captain as soon as possible. All personnel will familiarize themselves with the location and use of these extinguishers throughout the building so that in the event of an emergency they will be brought into use as soon as possible.

(9) Radiation signs and tags are posted for the safety of every employee and must be respected. The RD&E Radiological Protection Officer will post and remove radiation warning signs. When radiation levels exceed permissible levels, the area will be posted with appropriate signs. These signs will indicate the nature of the radiation and/or contamination, the date of posting, the radiation level at a specified distance, and any other appropriate data.

b. Medical. (1) Each person working with radiation will be required to undergo a complete medical examination at the start of employment and at one-year intervals thereafter. This initial examination will include a complete medical history and physical examination. The history will include a notation of previous work with ionizing radiation. A copy of each medical record will be kept on file by the preventative-medicine facility. The entering examination will include a complete blood count, urinalysis, and a chest x-ray.

(2) Special checkups will be made at any time as determined necessary by the RD&E Radiation Protection Officer and/or Preventive Medicine Officer.

c. Monitoring. (1) Personnel monitoring will be accomplished by the use of film badges and dosimeters with resulting data recorded. Special monitoring due to exposure or contamination may be required. Cases of overexposure or contamination may require a special medical checkup.

(2) When an individual has received a dose of ionizing radiation in an amount exceeding 3 rem per calendar quarter, he will be removed from duties involving occupational exposure to ionizing radiation until subsequent exposure limitations are established in consultation with competent medical authority. When an individual has received an accumulated dose of ionizing radiation in excess of 5(N-18) rem, he will be removed from duties involving occupational exposure to ionizing radiation until his exposure record has been evaluated by the Surgeon General of the Army and subsequent exposure limitations are established as necessary.

(3) The frequency of area monitoring will depend upon the radiation levels of the usual work in the area, the frequency of the use of the area and other conditions specific for each area. The radiation levels will be determined daily in the radiation control areas.

(4) The general radiation background in the area will be first recorded. Successive readings in representative work areas will be taken and noted. If any locations are noted where the dose rate is greater than the maximum permissible, the area will be posted immediately. Where additional shielding will correct the situation, this will be done as soon as possible.

(5) As each area is surveyed, a check will be made to detect any existing or potential hazard and to rectify it.

(6) Special surveys will be made by the RD&E RPO at any time upon specific request of an individual or before unrestricted entry is permitted to a previously contaminated area.

(7) Sufficient instrumentation will be available to the RD&E RPO to properly support all radiation surveys. Instruments will be capable of detecting types and levels of radiation involved and any possible resulting contamination. All instrumentation used for radiation protection will be calibrated at least every three (3) months, and after each maintenance or battery change. Dosimeters will be calibrated at least every six (6) months.

3. Periodic checkups. a. From time to time inspections will be made to insure that personnel are complying with procedures in radiation areas. Periodic checks will also insure that any modifications to the basic operating procedures are being followed correctly so as to minimize radiation hazards.

b. Constant inspections are necessary to avoid a dulled alertness on the part of personnel. It cannot be overemphasized that while working with radiation can be safe, mistakes may be very dangerous and possibly fatal. The checkups are for the safety of personnel.

c. The effeciency of all warning devices will be determined at intervals no greater than one month; this is in addition to the complete maintenance check which will be made at any time on all locks, etc. If at any time there is a failure in any remote monitors, work will be halted immediately and the approval of the RD&E Radiation Protection Officer will be required before normal operating procedure is resumed.

4. Access to radiation areas. a. Access to areas where there is a potential radiation hazard will be limited to minimum personnel required to safely, efficiently, and most readily carry out the required procedures. All persons entering an area classified as a Radiation Control Area or a High Radiation Area must wear a film badge and/or dosimeter. All visitors to radiation areas are required to be accompanied by personnel assigned to the area. A "visitor" is considered to be anyone not directly connected with the work being conducted.

b. Anyone discovering an area of hazardous radiation will evacuate the area and call the RD&E RPO who will accurately survey the area and post it. Only the RPO has the authority to remove any signs once they are posted.

5. Radiation hazard signs. These signs are in the form of labels, tags, and signs for posting areas and equipment and identifying radiation areas and items which may be radioactive or contaminated. They incorporate the standard magenta and yellow color, the three bladed radiation symbol, and appropriate wording, such as "Caution," "Danger," "Contamination," "Radiation Area," and "High Radiation Area." Where such signs and tags are used, additional information may be added to them by the RPO to further identify the nature of the hazard. The information will contain the nature of the substance causing the hazard, its dose rate at a specified distance, the date, and other pertinent information.

6. Decontamination and waste disposal. a. In order to prevent the possibility of contamination, the following regulations will be observed:

(1) There will be no smoking, drinking, or eating in radiation control areas.

(2) In cases of skin contamination, no eating, smoking or application of cosmetics will be permitted until all removable radioactivity has been taken from the skin and the person is released by the RPO.

59113

(3) Organic solvents, highly alkaline soaps, or abrasives should not be used for decontamination at any time, since they increase the possibility of skin injury and serious contamination. Levels of radiation beyond which areas are considered to be contaminated radiation areas are outlined in Chapter 3. Any incident or accident which causes an area to be contaminated must be reported immediately to the RPO. The use of any decontaminates other than mild soap and water should only be done under the supervision of medical personnel.

b. The RPO will be responsible for establishing procedures controlling the spread of contamination. These procedures will include emergency ventilation control, controlled step-off areas, controlled passageways, personnel monitoring, decontamination procedures, etc.

c. All persons selected by the RPO to work on monitoring and decontamination will be equipped with protective clothing, suitable gloves and other equipment required by the level of work.

d. In the event of airborne contamination the RPO will determine through the use of fixed or portable air sampling monitors the extent of the contamination. The RPO will specify the limit for airborne contamination. These limits will be:

	Alpha Concentrations	Beta Concentrations
M-17 Full face respirator	50 MPC*	50 MPC *
Supplied air or self-contained air supply with full face mask	50 MPC*	50 MPC *

*Maximum permissible concentration

e. When there is a possibility of contamination or radiation hazard, all ducts and vents leading from the building, whether they are for water, air, gas, or electrical conduit, will be marked so that maintenance or repairmen will be aware of the potential hazard. Where these tags exist, the RPO will be notified to survey the area before any work is started. If the need for shielding is indicated by monitoring procedures, the supervisor or the project leader will provide the shields before work in this area can resume.

f. Personnel decontamination methods depend upon the nature of the contaminating material and the size of contaminated skin area. The following procedures will be used immediately:

(1) First notify the RPO. All materials needed for decontamination will be furnished by the RPO and will be located where they will be most convenient for use.

(2) Thorough washing with soap and water and rinsing with large quantities of water is the best general decontamination method for the hands and other parts of the body, regardless of the nature of the radioactive contaminant. If, however, the contamination is well localized, it is recommended that the area be cleaned immediately with small swabs and later, if necessary, by a general washing. Spread of contamination to other skin areas is thus avoided.

g. If the contamination is widespread, a general washing or shower should be taken and other more specific measures outlined below should be followed under medical supervision and the RPO.

(1) For general washing: Wash the hands for two to three minutes in tepid water using a mild soap, with special attention to finger folds, outer edges of the hands and fingernails. Rinse thoroughly and repeat a maximum of four times. If the required degree of decontamination is not reached, proceed with step (2).

(2) Using a soft brush, wash and rinse contaminated areas three times in eight minutes of which no less than six minutes are spent in scrubbing. Use pressure light enough not to abrade the skin. Rinse thoroughly and monitor. If the desired level is not reached after several trials, chemical decontamination may be attempted as outlined in step (3).

(3) Apply a paste of titanium dioxide liberally and work it in over the contaminated areas for a minimum of two minutes. Use water sparingly, only enough to keep the paste moist. Rinse with warm water and follow with soap, brush and water, being extremely cautious to remove all paste about the nails. Monitor. Repeat process if necessary. If three successive trials fail to remove all contamination to the prescribed level, follow step (4).

(4) Daub over the contaminated area a saturated solution of potasium permanganate for not more than two minutes. Wash with soap and water and rinse. Next, apply a solution of sodium bisulfite to remove the dark permanganate stain. The procedure may be repeated but since the permanganate is caustic to the skin, care should be taken to follow the prescribed times closely. Hand cream should be used as a final step to prevent chapping.

h. Persons with cuts or wounds will not be permitted to work in a contaminated area or radioisotope laboratory unless specific approval is obtained from the RPO. Any wounds, cuts or abrasions received while working with, in, or near radioactive materials should be flushed with water immediately. Any such accidents should be referred to the RPO immediately so that specific measures can be taken.

i. The RPO will assist in and monitor the decontamination of materials and equipment. He will supervise the disposal of radioactive waste and other work connected with radiation hazards.

j. In the event of contaminated clothing, the contaminated articles will be removed immediately. Skin areas underneath the clothing will be cleansed as soon as possible and the contaminated clothing placed in plastic bag so that it may be properly laundered and recovered.

k. In order to prevent the gross contamination of laundered items, two separate laundry systems are employed. All contaminated laundry generated in radiation areas is laundered in a specially equipped laundry.

l. Contaminated materials will be disposed of in suitable dry active waste or liquid active waste containers. At no time should dry active and liquid active wastes be mixed. When containers for radioactive wastes are full, the RPO will supervise the removal. All radioactive waste containers will be stored in the radioactive storage vault.

m. The RPO will aid in the problem of evaluating contaminated equipment. If it is not practical to decontaminate the equipment, it will be handled as dry active waste. In some cases it may be possible to store such equipment for future use when radiation levels have decayed to acceptable levels. Equipment properly marked and shielded will be stored in the radiation storage vault.

n. The following methods can be used to decontaminate equipment; the decision as to the actual and most practical method will be determined by the RPO.

(1) Equipment may be washed with a hot, strong detergent solution, rinsed, and procedure repeated until the desired decontamination is reached. Chemicals that may be used include chromic acid, nitric acid, ammonium citrate, trisodium phosphate, and ammonium bifluoride. In selecting decontamination materials, the nature of the surface and extent of contamination must be considered. For all practical purposes, decontamination effectiveness of a solution is considered complete at the end of the second repetition of any one process. If the desired level is not reached at this time, other methods should be considered.

(2) Before any decontaminated equipment or articles can be moved or transported to a "clean area" the RPO will determine the extent of contamination of the particular item. Limits of contamination for items to be admitted to a clean area on the basis of 100 cm^2 area are as follows:

Loose contamination detectable by smear

Alpha (DPM)	50
Beta-Gamma (DPM)	100

Maximum fixed contamination

Alpha (DPM)	200
Beta-Gamma (m Rad/hr)	0.25

In the case of area contamination, the method of decontamination will depend upon the nature of the surface. These methods are vacuuming, physical removal of surfaces, covering of short-lived materials with impervious materials, detergents, and chemicals. When practical, areas which are contaminated will be isolated until radioactive decay permits safe entry.

o. All areas which are contaminated by accidents or spills will be evacuated immediately. If certain safety precautions can be instituted (such as placing absorbent paper on a spill to prevent spread of the contaminant) without endangering one's safety before leaving, it should be done. The RPO will monitor the contaminated area and determine the most practical methods of decontamination.

CHAPTER 7

Emergency Procedures for Radiation Accidents

1. Emergency procedures will be instituted at the time of a radiation accident or contamination event or whenever safe levels prescribed in Chapter 3 are exceeded.

2. Emergency procedures in case of contamination. a. An individual's first responsibility is for his own safety and for the safety of other individuals in the immediate area. Loss or damage of materials and equipment under emergency conditions is a secondary consideration. Immediate measures for the prevention of spread of contamination, such as dropping absorbent material on spilled liquids, should be carried out only if they can be completed safely. Once an individual has left an emergency area, he may not return without permission from and under the supervision of the RPO.

b. The room or area will be vacated immediately. Where radioactive materials are released, persons in the area should hold their breaths to avoid inhalation of the materials.

c. The contaminated area will be isolated as quickly as possible and each entrance or exit to the area marked with a warning sign indicating the hazard.

d. If any material comes in contact with the clothes or body:

(1) Clothing will be discarded in a suitable container. Under no circumstances should the clothing be so carelessly handled as to spread the contamination further.

(2) Contaminated skin areas will be decontaminated as quickly as possible using methods outlined in Appendix F, paragraph 6. Any contaminated cuts or abrasions should be flushed immediately with huge quantities of water.

(3) All other persons who were working in the vicinity of a contaminated area will be monitored by the RPO.

e. The RPO and the area supervisor will be notified immediately and no area decontamination procedures should be started until the situation is evaluated by the RPO.

3. Fires and other major emergencies. a. The first person to discover the emergency will:

(1) Notify all persons not directly involved with the incident who are in the area.

(2) Notify the fire department and other emergency personnel.

(3) Attempt extinguishment of fires using readily available first-aid type extinguishers if a radiation hazard is not immediately present. Efforts should be made to prevent water or fire fighting chemicals from coming in contact with the radiation source. Attempt to control runoff, preventing it from entering sewers or drainage systems until it has been monitored.

(4) Notify the RD&E RPO.

b. The RPO will:

(1) Advise and assist the emergency personnel.

(2) Following the emergency, monitor the area and determine the protective devices necessary for safe decontamination.

(3) Decontaminate.

(4) Monitor all persons who were in the emergency area and those who were involved in combating the emergency.

(5) Monitor downwind, delineate all contaminated areas, and restrict access as necessary.

SUPPLEMENT C

Individual Users

Reference: Form AEC-313, Item 4.

SUPPLEMENT C

SUBJECT: Individual Users

1. Reference: For AEC-313, Item 4.

2. Users of radioactive material. The use of radioactive material covered by this license shall be limited to:

a. The RD&E RPO, Alternate RPO, and Technical Staff of RPO.

b. Personnel to Perform Leak Tests.

c. Individuals approved by the Committee who are:

(1) RD&E employees stationed at Fort Monmouth.

(2) Non-RD&E employees working at Fort Monmouth on RD&E research, development or test programs.

(3) RD&E employees, whose primary duty station is at Fort Monmouth, who are on temporary assignment to one of the areas listed in Para. 5 of Supplement A. The project at the remote location and the protection procedures to be used must also be approved by the Committee.

d. An individual(s) working under the direct supervision of an RD&E employee approved by the Committee to directly supervise the individual's work with the radioactive material involved. The individual performing the work need not be an RD&E employee. The work may take place at locations designated in Supplement A. The primary duty station of the employee performing the direct supervision will be Fort Monmouth, New Jersey.

Note that direct supervision means that the supervisor is in a physical location where he can see the individual(s) being supervised or he is in a nearby area where he can hear a call or signal from said individual(s) and be able to reach the location where the individual(s) is working within a few moments.

3. Qualifications of Users and "Radiation Supervisors" Approved by the Committee. The Committee evaluates an applicant's (a) experience with radiation and radioactive material, (b) training in the principles and practices of radiation protection, radioactivity measurement standardization and monitoring techniques and instruments, mathematics and calculations basic to the use and measurement of radioactivity, and the biological effects of radiation, and (c) his familiarity with pertinent regulations and procedures, to insure they are commensurate with the hazard and activity of the radioisotopes requested in his application.

4. See Supplement F for:

a. List of individuals who serve as:

(1) Members of the Committee.

(2) RPO, Alternate RPO, and Technical Staff of RPO.

(3) Personnel to perform leak tests.

b. Training and Experience of Individuals who Serve in the Above-Mentioned Capacities.