NEDO-32408
Class 1
December, 2000

MODEL 2000
RADIOACTIVE MATERIAL TRANSPORT PACKAGE

MTR-TYPE FUEL DIVIDER
AND
TOWER SHIELDING REACTOR FUEL BASKET

SAFETY ANALYSIS REPORT

GE NUCLEAR ENERGY
VALLECITOS NUCLEAR CENTER
SUNOL, CALIFORNIA

NEDO-32408 REVISION 2
CLASS 1
DECEMBER 2000

MODEL 2000
RADIOACTIVE MATERIAL TRANSPORT PACKAGE

MTR-TYPE FUEL DIVIDER
AND
TOWER SHIELDING REACTOR FUEL BASKET

SAFETY ANALYSIS REPORT

NOTICE AND DISCLAIMER

This report was prepared by General Electric Company solely for the use of the U.S. Nuclear Regulatory Commission (NRC) in licensing the Model 2000 Transport Package MTR-Type Fuel Divider and Tower Shielding Reactor Fuel Basket. General Electric Company assumes no responsibility for liability or damage which may result from any other use of the information disclosed in this report.

The information contained in this report is believed to be an accurate and true representation of the facts known by or provided to General Electric Company at the time this report was prepared. General Electric Company and the individual contributors to this report make no express or implied warranty with respect to the accuracy, completeness, or usefulness of the information contained in this report, other than for the licensing of the Model 2000 Transport Package MTR-Type Fuel Divider and Tower Shielding Reactor Fuel Basket or that the use of any information disclosed in this report may not infringe privately owned rights, including patent rights.

The following endorsements apply to the Safety Analysis Report:

Checked By: _____ Date 12/08/94
Harold Durlofsky, Ph.D., Consultant
Structural Mechanics Analysis
Sunnyvale, California

Checked By: _____ Date 12/12/94
George E. Cunningham
Senior Licensing Engineer

Approved By: _____ Date 12/08/94
Raul J. Pomares, Manager
Engineering Projects

Table of Contents

1. GENERAL INFORMATION 1-1

1.1 INTRODUCTION 1-1
1.2 PACKAGE DESCRIPTION 1-3
1.2.1 Packaging 1-3
1.2.2 Operational Features 1-11
1.2.3 Contents of Packaging 1-13
1.3 REFERENCES 1-21
1.4 APPENDIX 1-21
1.4.1 Drawings 1-21

2. STRUCTURAL EVALUATION 2-1

2.1 STRUCTURAL DESIGN 2-1
2.1.1 Discussion 2-1
2.1.2 Design Criteria 2-5
2.2 COMPONENT WEIGHTS 2-7
2.3 MECHANICAL PROPERTIES OF MATERIALS 2-7
2.4 GENERAL STANDARDS FOR ALL PACKAGES 2-7
2.4.1 Minimum Package Size 2-8
2.4.2 Tamperproof Feature 2-9
2.4.3 Positive Closure 2-9
2.4.4 Chemical and Galvanic Reactions 2-9
2.5 LIFTING AND TIE-DOWN STANDARDS FOR ALL PACKAGES 2-9
2.6 NORMAL CONDITIONS OF TRANSPORT 2-9
2.6.1 Heat 2-9
2.6.2 Cold 2-11
2.6.3 Reduced External Pressure 2-11
2.6.4 Increased External Pressure 2-11
2.6.5 Vibration 2-13
2.6.6 Water Spray 2-13
2.6.7 Free Drop 2-17
2.6.8 Compression 2-28
2.6.9 Penetration 2-28
2.7 HYPOTHETICAL ACCIDENT CONDITIONS 2-29
2.7.1 Free Drop 2-29
2.7.2 Puncture 2-39
2.7.3 Thermal 2-39
2.7.4 Immersion — Fissile Material 2-39
2.7.5 Immersion — All Packages 2-39
2.7.6 Summary of Damage 2-39
2.8 SPECIAL FORM 2-41
2.9 FUEL RODS 2-41
2.10 REFERENCES 2-42
2.11 APPENDIX 2-43
2.11.1 Tower Shielding Reactor Structural Evaluation 2-43

2.11.2 Summary of Structural Evaluation from 2000 Watts Decay Heat Upgrade [2.4] *2-61*
2.11.3 Stress-Concentration Factors for Inclusion of Divider Wall Slots *2-70*
2.11.4 Fatigue Evaluation *2-74*
2.11.5 Structural Analysis of Cask Support Plate Option 2 (Tungsten Plate Insert) *2-76*
2.11.6 Variation of Wall Thickness on the TSR Fuel Basket Outer Shell (As Built Conditions) *2-76*

3. THERMAL EVALUATION 3-1

3.1 DISCUSSION 3-2
3.1.1 Thermal Design Criteria *3-2*
3.1.2 Design Bases Conditions *3-2*
3.1.3 Results of Design Basis Thermal Analyses *3-4*
3.2 SUMMARY OF THERMAL PROPERTIES OF MATERIALS 3-11
3.2.1 Lead *3-11*
3.2.2 Stainless Steel (304 Type) *3-12*
3.2.3 Air *3-13*
3.2.4 Aluminum *3-15*
3.2.5 Helium *3-16*
3.2.6 Fuel Material (Al + Fuel Meat + Helium Composite) [3.8] *3-17*
3.3 TECHNICAL SPECIFICATIONS OF COMPONENTS 3-17
3.4 THERMAL EVALUATION FOR NORMAL CONDITIONS OF TRANSPORT 3-18
3.4.1 Analytical Model *3-18*
3.4.2 Maximum Temperatures *3-36*
3.4.3 Minimum Temperatures *3-36*
3.4.4 Maximum Internal Pressures *3-36*
3.4.5 Evaluation of Package Performance for Normal Conditions of Transport *3-37*
3.5 HYPOTHETICAL ACCIDENT THERMAL EVALUATION 3-51
3.5.1 Analytical Model *3-51*
3.5.2 Package Conditions and Environment *3-51*
3.5.3 Package Temperatures *3-51*
3.5.4 Maximum Internal Pressures *3-52*
3.5.5 Evaluation of Package Performance for the Hypothetical Accident *3-52*
3.6 REFERENCES 3-62
3.7 APPENDIX 3-63
3.7.1 Thermal Test on GE Model 2000 Transport Package [3.17] *3-63*
3.7.2 Thermal Evaluation of TSR Fuel Basket *3-64*
3.7.3 Thermal Evaluation of the MTR Divider with an Air-Filled Cask Cavity *3-66*
3.7.4 Thermal Evaluation of Case 2 and Case 3 Fuel Loadings. *3-72*
3.7.5 TRIGA Fuel Elements Thermal Evaluation *3-82*

4. CONTAINMENT 4-1

4.1 REFERENCES 4-1

5. SHIELDING EVALUATION 5-1

5.1 DISCUSSION AND RESULTS 5-2
5.2 SOURCE SPECIFICATIONS 5-5
5.2.1 Gamma Sources *5-5*

5.2.2 *Neutron Source* 5-6
5.3 MODEL SPECIFICATION 5-8
5.3.1 *Description of the Geometric Model* 5-8
5.3.2 *Source Specification in MCNP* 5-9
5.4 SHIELDING EVALUATION 5-13
5.5 REFERENCES 5-15
5.6 APPENDIX 5-16
5.6.1 *Sample MCNP Input for Photon Dose Rate Calculations* 5-16
5.6.2 *Sample MCNP input for Neutron Dose Rate Calculations* 5-23
5.6.3 *Summary of the TSR Core Dose Rates Calculation* 5-30
5.6.4 *RIBD Code Output File for the 20% Enrichment Fuel* 5-32
5.6.5 *Short MTR Divider Shipment* 5-136

6. CRITICALITY EVALUATION 6-1

6.1 DISCUSSION AND RESULTS 6-1
6.1.1 *Analysis Scenarios* 6-1
6.1.2 *Container Description* 6-2
6.1.3 *Contents Description* 6-5
6.1.4 *Calculational Method* 6-9
6.1.5 *Summary of Results* 6-9
6.2 PACKAGE FUEL LOADING 6-15
6.2.1 *MTR* 6-15
6.2.2 *TRIGA* 6-22
6.3 MODEL SPECIFICATION 6-26
6.3.1 *Description of Calculational Models* 6-26
6.3.2 *Package Regional Densities* 6-32
6.4 CRITICALITY CALCULATION 6-37
6.4.1 *Calculational Method* 6-37
6.4.2 *Fuel Loading Optimization* 6-38
6.4.3 *Criticality Results* 6-39
6.4.4 *Conclusions* 6-58
6.5 CRITICAL BENCHMARK EXPERIMENTS 6-59
6.5.1 *Benchmark Experiments and Applicability* 6-59
6.6 REFERENCES 6-67
6.7 APPENDIX 6-69
6.7.1 *Input/Output — MTR-Type Fuels* 6-69
6.7.2 *Input/Output — TRIGA Type Fuels* 6-147
6.7.3. *Criticality Evaluation (TSR)* 6-209
6.7.4 *Validation of Infinite Cask Methodology (ICM)* 6-269
6.7.5 *Criticality Evaluation (Discrete Model) for MTR-Fuel Divider SN 01 (DELETED)* 6-276
6.7.6 *Criticality Evaluation (Discrete Model) for MTR-Fuel Divider SN 01* 6-276
6.7.7 *Criticality Evaluation (Discrete Model) for TRIGA-Fuel Divider SN 01* 6-361
6.7.8 *Criticality Evaluation of VR-1 MTR Fuel* 6-437

7. OPERATING PROCEDURES 7-1

7.1 PROCEDURES FOR LOADING THE PACKAGE 7-1

7.1.1 Package Receiving and Inspection ... *7-1*
7.1.2 Removal of the Package from the Transport Vehicle ... *7-2*
7.1.3 Preparing to Load the Cask ... *7-2*
7.1.4 Loading Irradiated Fuel into the Cask ... *7-3*
7.1.5 Loading Irradiated Hardware or Other Contents ... *7-5*
7.1.6 Installing the Cask Closure Lid ... *7-5*
7.1.7 Removing the Cask from the Loading Area ... *7-5*
7.1.8 Securing the Cask Lid ... *7-5*
7.1.9 Assembly Verification Leakage Testing ... *7-6*
7.1.10 Preparing the Cask for Transport of Irradiated Fuel or Other Radioactive Material ... *7-7*
7.2 PROCEDURES FOR UNLOADING THE PACKAGE ... 7-8
7.2.1 Package Receiving and Inspection ... *7-8*
7.2.2 Removal of the Package from the Transport Vehicle ... *7-8*
7.2.3 Preparing to Unload Irradiated Fuel ... *7-8*
7.2.4 Preparing to Unload Irradiated Hardware or Other Contents ... *7-9*
7.2.5 Unloading Irradiated Fuel from the Cask ... *7-9*
7.2.6 Unloading Irradiated Hardware or Other Contents ... *7-9*
7.2.7 Installing the Cask Closure Lid ... *7-9*
7.2.8 Removing the Cask from the Unloading Area ... *7-9*
7.2.9 Securing the Cask Lid ... *7-9*
7.3 PREARATION OF AN EMPTY CASK FOR TRANSPORT ... 7-10
7.3.1 Cask Cavity Inspection ... *7-10*
7.3.2 Installation of the Cask Closure Lid ... *7-10*
7.3.3 Assembly Verification Leakage Testing ... *7-10*
7.3.4 Preparing the Empty Cask for Transport ... *7-10*
7.4 APPENDICES ... 7-10
7.4.1 Typical Operating and Maintenance Procedures (For Illustrative Purposes Only) ... *7-10*
7.4.2 Thermal Conductivity Sensing Instrument ... *7-11*

8. ACCEPTANCE TESTS AND MAINTENANCE PROGRAM ... 8-1

8.1 ACCEPTANCE TEST ... 8-1
8.1.1 Visual Inspection ... *8-1*
8.1.2 Structural and Pressure ... *8-2*
8.1.3 Leak Tests ... *8-3*
8.1.4 Component Tests ... *8-3*
8.1.5 Shielding Integrity Test ... *8-4*
8.1.6 Thermal Acceptance Tests ... *8-4*
8.2 MAINTENANCE PROGRAM ... 8-7
8.2.1 Structural and Pressure Tests ... *8-7*
8.2.2 Leak Tests ... *8-8*
8.2.3 Subsystems Maintenance ... *8-8*
8.2.4 Valves, Rupture Disks, and Gaskets on Containment Vessel ... *8-9*
8.2.5 Shielding ... *8-9*
8.2.6 Thermal ... *8-9*

List of Tables

Table 1.0A. Bounding Parameters for MTR-Type Fuel Elements 1-14
Table 1.0. Bounding Parameters for TRIGA-Type Fuel Elements 1-16
Table 1.1. MTR-Type Fuel Nuclear Data 1-19
Table 1.2. Dimensions and Nuclear Data for Typical TRIGA Fuel Assemblies 1-20

Table 2.1. Allowable Stress Limit Criteria [2.2] 2-6
Table 2.2. Load Combination Definitions 2-7
Table 2.3. MTR-Type Fuel Divider Weight 2-8
Table 2.4. Mechanical Properties of Materials 2-8
Table 2.5. Maximum Normal Condition Temperatures for MTR-Type Fuel Divider 2-10
Table 2.6. Maximum Thermal Stress Intensity, Normal Condition for MTR-Type Fuel Divider 2-12
Table 2.7. Vibration Analysis at -20°F for MTR-Type Fuel Divider 2-15
Table 2.8. Vibration Analysis at 100°F for MTR-Type Fuel Divider 2-16
Table 2.9. Normal Condition Head on Drop at -20°F for MTR-Type Fuel Divider 2-20
Table 2.10. Normal Condition Head on Drop at 100°F for MTR-Type Fuel Divider 2-21
Table 2.11. Normal Condition Bottom Drop at -20°F for MTR-Type Fuel Divider 2-23
Table 2.12. Normal Condition Bottom Drop at 100°F for MTR-Type Fuel Divider 2-24
Table 2.13. Normal Condition Side Drop at -20°F for MTR-Type Fuel Divider 2-26
Table 2.14. Normal Condition Side Drop at 100°F for MTR-Type Fuel Divider 2-27
Table 2.15. Summary of Results for Normal Conditions for MTR-Type Fuel Divider 2-28
Table 2.16. Accident Condition Head on Drop for MTR-Type Fuel Divider 2-32
Table 2.17. Accident Condition Bottom Drop for MTR-Type Fuel Divider 2-34
Table 2.18. Accident Condition Side Drop for MTR-Type Fuel Divider 2-36
Table 2.19. Accident Condition Cg Over Corner for MTR-Type Fuel Divider 2-38
Table 2.20. Summary of Results for Accident Conditions for MTR-Type Fuel Divider 2-40
Table 2.21. Maximum TSR Basket Component Weight 2-46
Table 2.22. Mechanical Properties of Materials 2-47
Table 2.23. TSR Vertical Drop Stresses 2-60
Table 2.24. TSR Side Drop Stresses 2-60
Table 2.25. Summary of Stresses, Normal Condition of Transport 2-63
Table 2.26. Summary of Results for Accident Conditions 2-65
Table 2.27. Comparison of Maximum Stresses, 600W and 2000W Contents Heat Normal Conditions of Transport 2-67
Table 2.28. Comparison of Stresses for 600 Watts Versus 2000 Watts Contents Heat Accident Conditions 2-69
Table 2.29. Material Properties of Tungsten Alloy 2-76

Table 3.1. Summary of Temperatures — Case 1, MTR-Type Fuel 3-5
Table 3.1A. Summary of Temperatures — Case 2 MTR-Type Fuel 3-6
Table 3.1B. Summary of Temperatures — Case 3 MTR-Type Fuel 3-7
Table 3.1C. Summary of Temperatures — Case I TRIGA Fuel, 1.475 Inch Diameter, Al Clad 3-8
Table 3.1D. Summary of Temperatures — TRIGA Fuel, Case II, 1.475 Inch Diameter, Stainless Steel Clad 3-9
Table 3.1E. Summary of Temperatures — TRIGA Fuel, Case III, 0.542 Inch Diameter, Incoloy Clad 3-10
Table 3.2. Lead Thermophysical Properties 3-11
Table 3.3. Stainless Steel (Type 304) Thermophysical Properties 3-12
Table 3.4. Thermophysical Properties of Air 3-13
Table 3.5. Thermophysical Properties of MTR-Type Fuel Element Aluminum (Type 6061) Material 3-15
Table 3.6. Thermophysical Properties of Helium 3-16
Table 3.7. Temperature Versus Specific Heat 3-17
Table 3.8. Temperature Versus Specific Heat (with Air) 3-66

Table 5.1A. Summary of Maximum Dose Rates (mrem/hr), from an MTR-Type Fuel Source....5-3
Table 5.1B. Summary of Maximum Dose Rates (mrem/hr), from an MTR-Type Fuel Source....5-4
Table 5.1C. Summary of Maximum Dose Rates (mrem/hr), from an MTR-Type Fuel Source....5-5
Table 5.2A. Fission Product Gamma Sources....5-7
Table 5.2B. Neutron Source for the MTR Fuels....5-8
Table 5.3. Gamma Flux-Dose Rate Conversion Factors....5-14
Table 5.4. Source Term....5-138
Table 5.5. Neutron Source Terms....5-139
Table 5.6. Summary of Maximum Dose Rates (mrem/hr), from an MTR-Type Fuel Source....5-144

Table 6.1. Summary of Results — Normal Conditions of Transport for Case I, U_3O_8, Type of Fuel (93.2% Enriched)....6-10
Table 6.2. Summary of Results — Normal Conditions of Transport for Case II, U_3Si_2, Type of Fuel (20.0% Enriched)....6-10
Table 6.3. Summary of Results — Single Container for Case I, U_3O_8, Type of Fuel (93.2% Enriched)....6-11
Table 6.4. Summary of Results — Single Container for Case II, U_3Si_2, Type of Fuel (20.0% Enriched)....6-11
Table 6.5. Summary of Results — Accident Condition (Conservatively Treated as Flooded) for Case I, U_3O_8, Type of Fuel (93.2% Enriched)....6-12
Table 6.6. Summary of Results — Accident Condition (Conservatively Treated as Flooded) for Case II, U_3Si_2, Type of Fuel (20.0% Enriched)....6-12
Table 6.7. Summary of Results — Infinite Cask Scenario for MTR Case I, U_3O_8, Type of Fuel (94.0% Enriched)....6-12
Table 6.8. Summary of Results — Infinite Cask Scenario for MTR Case II, U_3Si_2, Type of Fuel (20.0% Enriched)....6-13
Table 6.9. Summary of Results — Infinite Cask Scenario for MTR Case III, UAl_x, Type of Fuel (94% Enriched)....6-13
Table 6.10. Summary of Results — Infinite Cask Scenario for MTR Case IV, U Metal Type of Fuel (95% Enriched)....6-13
Table 6.11. Summary of Results — Infinite Cask Scenario for TRIGA Case XVII Type of Fuel (70.0% Enriched)....6-14
Table 6.12. Summary of Results — Infinite Cask Scenario for TRIGA Case V Type of Fuel (94% Enriched)....6-14
Table 6.13. Summary of Results — Infinite Cask Scenario for TRIGA Case VIII Type of Fuel (94% Enriched)....6-15
Table 6.14. Model 2000 ^{235}U Mass Limit for a Single (N=1) Shipment for Case I (U_3O_8) Type of Fuel (93.2% Enriched)....6-15
Table 6.15. Model 2000 235U Mass Limit for a Single (N=1) Shipment for Case II (U3Si2) Type of Fuel (93.2% Enriched)....6-16
Table 6.16. Model 2000 ^{235}U Mass Limit for an Infinite (N=∞) Shipment for MTR Case I (U_3O_8) Type of Fuel (94% Enriched)....6-16
Table 6.17. Model 2000 ^{235}U Mass Limit for an Infinite (N=∞) Shipment for MTR Case II (U_3Si_2) Type of Fuel (20% Enriched)....6-16
Table 6.18. Model 2000 ^{235}U Mass Limit for an Infinite (N=∞) Shipment for MTR Case III (UAl_x) Type of Fuel (94% Enriched)....6-16
Table 6.19. Model 2000 ^{235}U Mass Limit for an Infinite (N=∞) Shipment for MTR Case IV (U Metal) Type of Fuel (95% Enriched)....6-16
Table 6.20. MTR Type of Fuel Data....6-19
Table 6.21. Package Parameters for the Model 2000 Cask with MTR Type Fuel for Case I, U_3O_8, Type of Fuel (94% Enriched)....6-20
Table 6.22. Package Parameters for the Model 2000 Cask with MTR Type Fuel for Case II, U_3Si_2, Type of Fuel (20% Enriched)....6-20
Table 6.23. Package Parameters for the Model 2000 Cask with MTR Case III Fuel (UAl_x) (94% Enriched)....6-21

Table 6.24. Package Parameters for the Model 2000 Cask with MTR Case IV Fuel (U Metal) (95% Enriched) 6-21
Table 6.25. Model 2000 ^{235}U Mass Limit for an Infinite (N=∞) Shipment for TRIGA Case XVII Type of Fuel (70% Enriched) 6-22
Table 6.26. TRIGA Type Fuel Data 6-23
Table 6.27. Package Parameters for the Model 2000 Cask with TRIGA Case XVII Type of Fuel (70% Enriched) 6-24
Table 6.28. Model 2000 ^{235}U Mass Limit for an Infinite (N=∞) Shipment for TRIGA Case V Type of Fuel (94% Enriched) 6-24
Table 6.29. Package Parameters for the Model 2000 Cask with TRIGA Case V Type of Fuel (94% Enriched) 6-25
Table 6.30. Model 2000 ^{235}U Mass Limit for an Infinite (N=∞) Shipment for TRIGA Case VIII Type of Fuel (94% Enriched) 6-25
Table 6.31. Package Parameters for the Model 2000 Cask with TRIGA Case VIII Type of Fuel (94% Enriched) 6-26
Table 6.32. Selected Densities as a Function of WF for MTR Type of Fuel 6-33
Table 6.33. Material Densities Used in the Model 2000 6-34
Table 6.34. Material Densities of Borated Aluminum 6-35
Table 6.35. Mixture Height as a Function of Water Weight Fraction for TRIGA Fuels 6-36
Table 6.36. Material Densities Used in GEMER TRIGA Model 6-37
Table 6.37. GEMER Results for the Normal Condition Array for Case I (93.2% Enriched U_3O_8) 6-39
Table 6.38. GEMER Results for the Normal Condition Array for Case II (20.0% Enriched U_3Si_2) 6-40
Table 6.39. GEMER Results for a Single Container for Case I (93.2% Enriched U3O8) 6-41
Table 6.40. GEMER Results for a Single Container for Case II (20.0% Enriched U_3Si_2) 6-41
Table 6.41. GEMER Results for the Accident Array (Conservatively Treated as Flooded) for Case I (93.2% Enriched U_3O_8) 6-42
Table 6.42. GEMER Results for the Accident Array (Conservatively Treated as Flooded) for Case II (20% Enriched U_3Si_2) 6-43
Table 6.43. GEMER Results — Infinite Cask Scenario for MTR Case I (94% Enriched U3O8) 6-44
Table 6.44. GEMER Results — Infinite Cask Scenario for MTR Case II (20% Enriched U3Si2) 6-45
Table 6.45. GEMER Results — Infinite Cask Scenario for MTR Case III (94% Enriched UAlx) 6-46
Table 6.46. GEMER Results — Infinite Cask Scenario for MTR Case IV (95% Enriched U Metal) 6-47
Table 6.47. GEMER Results — Single Container for TRIGA Case VIII Fuel (93% Enriched) 6-50
Table 6.48. GEMER Results — Normal Condition Array for TRIGA Case VIII Fuel (93% Enriched) 6-51
Table 6.49. GEMER Results — Accident Array (Conservatively Treated as Flooded) for TRIGA Case VIII Fuel (93% Enriched) 6-52
Table 6.50. GEMER Results — Infinite Cask Scenario for TRIGA Case XVII (70% Enriched) 6-53
Table 6.51. GEMER Results — Infinite Cask Scenario for TRIGA Case V (94% Enriched) 6-53
Table 6.52. GEMER Results — Infinite Cask Scenario for TRIGA Case VIII (94% Enriched) 6-54
Table 6.53. Summary of GEMER01V Validation Cases 6-59
Table 6.54. Criticals Used in Bias Determination 6-63
Table 6.55. Summary of Results — Normal Conditions of Transport for the TSR Type of Fuel (93.2% Enrichment) 6-210
Table 6.56. Summary of Results — Single Container for the TSR Type of Fuel (93.2% Enrichment) 6-210
Table 6.57. Summary of Results — Accident Condition (Conservatively Treated as Flooded) for the TSR Type of Fuel (93.2% Enrichment) 6-211
Table 6.58. Summary of Results — Infinite Cask Scenario for TSR Type Fuel (94% Enruchment) 6-211
Table 6.59. Model 2000 235U Mass Limit for a Single (N=1) Shipment for the TSR Type of Fuel 6-212
Table 6.60. Model 2000 ^{235}U Mass Limit for an Infinite (N=∞) Shipment of the TSR Type of Fuel 6-212
Table 6.61. Package Parameters for the Model 2000 Cask for the TSR Type of Fuel (94% Enrichment) 6-212
Table 6.62. Selected Densities as a Function of WF for the TSR Type of Fuel 6-216
Table 6.63. Material Densities Used in the Model 2000 for the TSR Type of Fuel 6-217
Table 6.64. TSR Element Types 6-220
Table 6.65. Breakdown of U-235 in TSR Shipment with the Highest Fissile Content 6-221

Table 6.66. TSR Top Compartment 6-224
Table 6.67. TSR Middle Compartment 6-224
Table 6.68. TSR Bottom Compartment 6-225
Table 6.69. GEMER Results for the Normal Condition Array for the TSR Case (93.2% Enriched Fuel) 6-226
Table 6.70. GEMER Results for a Single Container for the TSR Case (93.2% Enriched Fuel) 6-227
Table 6.71. GEMER Results for the Accident Array (Conservatively Treated as Flooded) for the TSR Case (93.2% Enriched Fuel) 6-228
Table 6.72. GEMER Results — Infinite Cask Scenario for TSR Fuel (94% Enriched Fuel) 6-229
Table 6.73. GEMER Results for the Normal Condition Array for Case I (U_3O_8) 6-270
Table 6.74. GEMER Results for a Single Container for Case I (U_3O_8) 6-271
Table 6.75. GEMER Results for the Accident Array (Conservatively Treated as Flooded) for Case I (U_3O_8) 6-272
Table 6.76. Infinite Cask Calculations (93.2% Enriched Fuel) 6-274
Table 6.95. MTR Type I, II, and III Fuel Data 6-281
Table 6.96. MTR Type IV Fuel Data 6-283
Table 6.97. Summary of Results for the Infinite Cask Scenario for MTR Type I Fuel (94% Enrichment) — Discrete Fuel Model 6-284
Table 6.98. Summary of Results for the Infinite Cask Scenario for MTR Type II Fuel (20% Enrichment) — Discrete Fuel Model 6-284
Table 6.99. Summary of Results for the Infinite Cask Scenario for MTR Type III Fuel (94% Enrichment) — Discrete Fuel Model 6-284
Table 6.100. Summary of Results for the Infinite Cask Scenario for MTR Type IV Fuel (95% Enrichment) — Discrete Fuel Model 6-285
Table 6.101. Package Parameters for Model 2000 Cask with MTR Type I Fuel (U_3O_8) 6-285
Table 6.102. Package Parameters for Model 2000 Cask with MTR Type II Fuel (U_3Si_2) 6-286
Table 6.103. Package Parameters for Model 2000 Cask with MTR Type III Fuel (UAl_x) 6-286
Table 6.104. Package Parameters for Model 2000 Cask with MTR Type IV Fuel (Metallic U) 6-287
Table 6.105. Material Densities Used in the Model 2000 for the MTR Type of Fuel 6-289
Table 6.106. Material Densities of Borated Aluminum 6-290
Table 6.107. Summary of Results — Infinite Cask Scenario for MTR Type I Fuel (U_3O_8) 6-292
Table 6.108. GEMER Results — Infinite Cask Scenario for MTR Type I Fuel (Discrete Model, Fuel Plate Number Sensitivity) 6-293
Table 6.109. GEMER Results — Infinite Cask Scenario for MTR Type I Fuel (Discrete Model, Water Density Sensitivity, 14 Plates) 6-294
Table 6.110. GEMER Results — Infinite Cask Scenario for MTR Type I Fuel (Discrete Model, Water Density Sensitivity, 17 Plates) 6-295
Table 6.111. GEMER Results — Infinite Cask Scenario for MTR Type I Fuel (Discrete Model, Water Density Sensitivity, 14 and 17 Plates, Pitch Sensitivity) 6-295
Table 6.112. Summary of Results — Infinite Cask Scenario for MTR Type II Fuel (U_3Si_s) 6-298
Table 6.113. GEMER Results — Infinite Cask Scenario for MTR Type II Fuel (Discrete Model, 19 Fuel Plates) 6-298
Table 6.114. Summary of Results — Infinite Cask Scenario for MTR Type III Fuel (UAl_x) 6-300
Table 6.115. GEMER Results — Infinite Cask Scenario for MTR Type III Fuel (Discrete Model) 6-300
Table 6.116. Summary of Results — Infinite Cask Scenario for MTR Type IV Fuel (Metallic U) 6-302
Table 6.117. GEMER Results — Infinite Cask Scenario for MTR Type IV Fuel (Discrete Model) 6-302
Table 6.118. TRIGA Fuel Data 6-363
Table 6.119. Summary of Results for the Infinite Cask Scenario for TRIGA Case XVII Fuel (70% Enrichment) — Discrete Fuel Model 6-366
Table 6.120. Summary of Results for the Infinite Cask Scenario for TRIGA Case V Fuel (94% Enrichment) — Discrete Fuel Model 6-366
Table 6.121. Summary of Results for the Infinite Cask Scenario for TRIGA Case VIII Fuel (94% Enrichment) — Discrete Fuel Model 6-366
Table 6.122. Package Parameters for the Model 2000 Cask with TRIGA Case XVII Type of Fuel (70% Enriched) 6-367

Table 6.123. Package Parameters for the Model 2000 Cask with TRIGA Case V Type of Fuel (94% Enriched) 6-368
Table 6.124. Package Parameters for the Model 2000 Cask with TRIGA Case VIII Type of Fuel (94% Enriched) 6-368
Table 6.125. TRIGA Case XVII Fuel Pin Discrete Model 6-370
Table 6.126. TRIGA Case V Fuel Pin Discrete Model 6-370
Table 6.127. TRIGA Case VIII Fuel Pin Discrete Model 6-371
Table 6.128. Material Densities Used in the Model 2000 for the TRIGA Type of Fuel 6-372
Table 6.129. Material Densities of Borated Aluminum 6-372
Table 6.130. Summary of Results — Infinite Cask Scenario for TRIGA Case XVII Fuel 6-374
Table 6.131. GEMER Results — Infinite Cask Scenario for TRIGA Case XVII Fuel (Discrete Model, Fuel Pin Sensitivity) 6-375
Table 6.132. GEMER Results — Infinite Cask Scenario for TRIGA Case XVII Fuel (Discrete Model, Water Density Sensitivity, 4 out of 4 Pins Case) 6-375
Table 6.133. GEMER Results — Infinite Cask Scenario for TRIGA Case XVII Fuel (Discrete Model, Water Density Sensitivity, 3 out of 4 Pins Case) 6-376
Table 6.134. GEMER Results — Infinite Cask Scenario for TRIGA Case XVII Fuel (Discrete Model, Fuel Pitch Sensitivity for the 4 x 140 Grams Limit Case) 6-376
Table 6.135. Summary of Results — Infinite Cask Scenario for TRIGA Case V Fuel 6-381
Table 6.136. GEMER Results — Infinite Cask Scenario for TRIGA Case V Fuel (Discrete Model, Fuel Pin Sensitivity) 6-381
Table 6.137. GEMER Results — Infinite Cask Scenario for TRIGA Case V Fuel (Discrete Model, Water Density Sensitivity, 4 Pins x 165 Grams Case) 6-382
Table 6.138. GEMER Results — Infinite Cask Scenario for TRIGA Case V Fuel (Discrete Model, Water Density Sensitivity, 3 Pins x 220 Grams Case) 6-384
Table 6.139. GEMER Results — Infinite Cask Scenario for TRIGA Case V Fuel (Discrete Model, Fuel Pitch Sensitivity for the 4 Pins x 165 Grams Case and the 3 Pins x 220 Grams Case) 6-386
Table 6.140. Summary of Results — Infinite Cask Scenario for TRIGA Case VIII Fuel 6-391
Table 6.141. GEMER Results — Infinite Cask Scenario for TRIGA Case VIII Fuel (Discrete Model, Fuel Pin Sensitivity for the 20 x 33 Grams Limit Case) 6-391
Table 6.142. GEMER Results — Infinite Cask Scenario for TRIGA Case VIII Fuel (Discrete Model, Fuel Pin Sensitivity for the 15 x 44 Grams Limit Case) 6-392
Table 6.143. GEMER Results — Infinite Cask Scenario for TRIGA Case VIII Fuel (Discrete Model, Water Density Sensitivity, 20 pins x 33 grams Case) 6-392
Table 6.144. GEMER Results — Infinite Cask Scenario for TRIGA Case VIII Fuel (Discrete Model, Water Density Sensitivity, 15 pins x 44 grams Case) 6-393
Table 6.145. GEMER Results — Infinite Cask Scenario for TRIGA Case VIII Fuel (Discrete Model, Water Density Sensitivity, 19 pins x 33 grams Case) 6-394
Table 6.146. GEMER Results — Infinite Cask Scenario for TRIGA Case VIII Fuel (Discrete Model, Water Density Sensitivity, 14 pins x 44 grams Case) 6-395
Table 6.147. GEMER Results — Infinite Cask Scenario for TRIGA Case VIII Fuel (Fuel Pitch Sensitivity for the 15 x 44 Grams and 20 Pins x 33 Grams Cases) 6-396
Table 6.148. GEMER Results — Infinite Cask Scenario for TRIGA Case VIII Fuel (Fuel Pin Loading Sensitivity for the 15 Pins x 44 Grams Cases) 6-397
Table 6.149 MTR Type I, II, III, and III-B Fuel Data 6-439
Table 6.150. Package Parameters for Model 2000 Cask with MTR Type III-B Fuel (UAl_x) 6-442
Table 6.151. Summary of Results — Infinite Cask Scenario for MTR Type III-B Fuel (UAl_x) 6-443
Table 6.152. GEMER Results — Infinite Cask Scenario for MTR Type III-B Fuel (Discrete Model, Nominal Fuel Meat Thickness of 68.9 Mils and Clad Thickness of 15 Mils) 6-444
Table 6.153. GEMER Results — Infinite Cask Scenario for MTR Type III-B Fuel (Discrete Model, Fuel Meat Thickness of 100 Mils and Clad Thickness of 10 Mils) 6-445
Table 6.154. GEMER Results — Infinite Cask Scenario for MTR Type III-B Fuel (Discrete Model, Fuel Meat Thickness of 100 Mils and Clad Thickness of 15 Mils) 6-446
Table 6.155. GEMER Results — Infinite Cask Scenario for MTR Type III-B Fuel (Discrete Model, Fuel Meat Thickness of 100 Mils and Clad Thickness of 20 Mils) 6-447

Table 6.156. GEMER Results — Infinite Cask Scenario for MTR Type III-B Fuel (Discrete Model, Fuel Meat Thickness of 20 Mils and Clad Thickness of 10 Mils) 6-448
Table 6.157. GEMER Results — Infinite Cask Scenario for MTR Type III-B Fuel (Discrete Model, Fuel Meat Thickness of 20 Mils and Clad Thickness of 15 Mils) 6-449
Table 6.158. GEMER Results — Infinite Cask Scenario for MTR Type III-B Fuel (Discrete Model, Fuel Meat Thickness of 20 Mils and Clad Thickness of 20 Mils) 6-450

Table of Illustrations

Figure 1.1. Model 2000 Transport Packaging 1-5
Figure 1.2. Model 2000 Transport Packaging, Cask 1-6
Figure 1.3. Model 2000 Transport Packaging, Overpack 1-7
Figure 1.4. MTR-Type Fuels Shipping Configuration 1-8
Figure 1.5. MTR-Type Fuel Shipping Divider 1-10
Figure 1.6. TSR Fuel Basket 1-12
Figure 1.7. Fuel Element Schematic for TRIGA Case XVII and Case V Fuels 1-17
Figure 1.8. TRIGA Case VIII Fuel Element 1-18

Figure 2.1. STIF10N Element Configuration 2-2
Figure 2.2. LIBRA Finite Element Model of MTR-Type Fuel Divider 2-4
Figure 2.3. Finite Element Model Cross-Section for MTR-Type Fuel Divider 2-5
Figure 2.4. Maximum Stress Element Locations for MTR-Type Fuel Divider 2-12
Figure 2.5. Location of Applied Stress Concentration Factors for MTR-Type Fuel Divider 2-14
Figure 2.6. Normal Condition Head On Drop for MTR-Type Fuel Divider 2-19
Figure 2.7. Normal Condition Bottom On Drop for MTR-Type Fuel Divider 2-22
Figure 2.8. Normal Condition Side Drop for MTR-Type Fuel Divider 2-25
Figure 2.9. Accident Condition Head On Drop for MTR-Type Fuel Divider 2-31
Figure 2.10. Accident Condition Bottom On Drop for MTR-Type Fuel Divider 2-33
Figure 2.11. Accident Condition Side Drop for MTR-Type Fuel Divider 2-35
Figure 2.12. Accident Condition Cg-Over-Corner Drop for MTR-Type Fuel Divider 2-37
Figure 2.13. TSR Fuel Configuration 2-43
Figure 2.14. Tower Shielding Reactor MTR-Type Fuel Basket 2-45
Figure 2.15. Vertical Drop Condition for TSR Fuel Basket 2-49
Figure 2.16. Finite Element Model of TSR Upper Section Membrane 2-51
Figure 2.17. TSR Fuel Basket Inner Cylinder Finite Element Model 2-53
Figure 2.18. Finite Element Model of TSR Inner Cylinder 2-54
Figure 2.19. Finite Element Model of TSR Outer Cylinder 2-56
Figure 2.20. Finite Element Model of TSR Upper Section Divider Wall 2-58
Figure 2.21. Stress Point Locations with Element Numbers 2-62
Figure 2.22. Region of Detailed Divider Wall Finite Element Model 2-70
Figure 2.23. Detailed Fuel Divider Model with Slot 2-71
Figure 2.24. Detailed Fuel Divider Model without Slot 2-72
Figure 2.25. Geometry for Stress-Concentration Based on Notch Radius 2-73
Figure 2.26. Wall Thickness 2-80
Figure 2.27. TSR Shell Wall Thickness Versus Radial Position 2-81

Figure 3. Zero (0) MTR-Type Fuel Divider 3-3
Figure 3.1. Finite Element Model of Cask and Overpack, Package Model 3-21
Figure 3.1A. Thermal Finite Element Model, Overlaid on Transport Overpack 3-22
Figure 3.2. LIBRA (Thermal) Finite Element Model of Fuel Divider, Divider Model 3-23
Figure 3.3. Cross-Section of Fuel Divider (Thermal) Finite Element Model 3-24
Figure 3.4. Key Plot of Temperature Locations with Node Numbers, Package Model 3-38
Figure 3.5. Model 2000 Transport Package, Steady-State Analysis 100°F Ambient Temperature, Maximum Decay Heat and Maximum Insulation 3-39
Figure 3.6. Model 2000 Transport Package, Steady-State Analysis 100°F Ambient Temperature, Maximum Decay Heat and No Insulation 3-40
Figure 3.7. Model 2000 Transport Package, Steady-State Analysis -20°F Ambient Temperature, Maximum Decay Heat and No Insulation 3-41
Figure 3.8. Model 2000 Transport Package, Steady-State Analysis -40°F Ambient Temperature, Maximum Decay Heat and No Insulation 3-42
Figure 3.9. Contour Plot — Model 2000 Transport Package, Steady-State Analysis 100°F Ambient Temperature, Maximum Decay Heat and No Insulation 3-43

Figure 3.10. Contour Plot — Model 2000 Transport Package, Steady-State Analysis 100°F Ambient Temperature, Maximum Decay Heat and Maximum Insulation 3-44
Figure 3.11. Contour Plot — Model 2000 Transport Package, Steady-State Analysis -20°F Ambient Temperature, Maximum Decay Heat and No Insulation 3-45
Figure 3.12. Contour Plot — Model 2000 Transport Package, Steady-State Analysis -40°F Ambient Temperature, Maximum Decay Heat and No Insulation 3-46
Figure 3.13. Steady-State Thermal Analysis — Fuel Divider with Fuel Elements 100°F Ambient with Maximum Decay Heat 3-47
Figure 3.14. Steady-State Thermal Analysis — Fuel Divider with Fuel Elements,100°F Ambient with Maximum Decay Heat and Maximum Insulation 3-48
Figure 3.15. Steady-State Thermal Analysis — Fuel Divider with Fuel Elements -20°F Ambient with Maximum Decay Heat and No Insulation 3-49
Figure 3.16. Steady-State Thermal Analysis — Fuel Divider with Fuel Elements -40°F Ambient with Maximum Decay Heat and No Insulation 3-50
Figure 3.17. Transient Thermal Analysis — Fire Accident 100°F Ambient with Maximum Decay Heat and Maximum Insulation, Time: 0.5 Hr 3-53
Figure 3.18. Transient Thermal Analysis — Fire Accident 100°F Ambient with Maximum Decay Heat and Maximum Insulation, Time: 1.0 Hr 3-54
Figure 3.19. Transient Thermal Analysis — Fire Accident 100°F Ambient with Maximum Decay Heat and Maximum Insulation, Time: 1.5 Hr 3-55
Figure 3.20. Transient Thermal Analysis — Fire Accident 100°F Ambient with Maximum Decay Heat and Maximum Insulation, Time: 2.0 Hr 3-56
Figure 3.21. Transient Thermal Analysis — Fire Accident 100°F Ambient with Maximum Decay Heat and Maximum Insulation, Time: 2.5 Hr 3-57
Figure 3.22. Transient Thermal Analysis — Fire Accident 100°F Ambient with Maximum Decay Heat and Maximum Insulation, Time: 3.0 Hr 3-58
Figure 3.23. Contour Plot — Fuel Divider Model, Transient Thermal Analysis, Fire Accident 100°F Ambient with Maximum Decay Heat and Maximum Insulation, Time: 0.5 Hr 3-59
Figure 3.24. Contour Plot — Fuel Divider Model, Transient Thermal Analysis, Fire Accident 100°F Ambient with Maximum Decay Heat and Maximum Insulation, Time: 3.0 Hr 3-60
Figure 3.25. Temperature vs. Time, Fire Accident Transient — Overpack and Cask 3-61
Figure 3.26. Cavity Wall Temperature — Thermal Test Versus LIBRA Model Model 2000 Transport Package with 2000 Watts Heat 3-64
Figure 3.27. Steady-State Thermal Analysis — Fuel Divider with Fuel Elements, 100°F Ambient with Maximum Decay Heat and Maximum Insulation 3-68
Figure 3.28. Steady-State Thermal Analysis — Fuel Divider with Fuel Elements, 100°F Ambient with Maximum Decay Heat 3-69
Figure 3.29. Contour Plot — Fuel Divider Model, Transient Thermal Analysis, Fire Accident, 100°F Ambient with Maximum Decay Heat and Maximum Insulation, Time: 0.5 Hr 3-70
Figure 3.30. Contour Plot — Fuel Divider Model, Transient Thermal Analysis, Fire Accident 100°F Ambient with Maximum Decay Heat and Maximum Insulation, Time: 20.0 Hr 3-71
Figure 3.31. Fire Accident Transient,. Fuel Temperature vs. Time 3-71
Figure 3.32. Case 2 — Fuel Loading 3-74
Figure 3.33. Case 3 — Fuel Loading 3-75
Figure 3.34. Case 2: Steady-State Thermal Analysis — Fuel Divider with Fuel Elements, 100°F Ambient with Maximum Decay Heat and Maximum Solar Load 3-77
Figure 3.35. Case 2, Contour Plot — Fuel Divider Model, Transient Thermal Analysis, Fire Accident, 100°F Ambient with Maximum Decay Heat and Maximun Solar Load, Time: 0.5 Hr 3-78
Figure 3.36. Case 2, Contour Plot — Fuel Divider Model, Transient Thermal Analysis, Fire Accident, 100°F Ambient with Maximum Decay Heat and Maximun Solar Load, Time: 21.0 Hr 3-79
Figure 3.37. Case 3, Contour Plot — Fuel Divider Model, Transient Thermal Analysis, Fire Accident, 100°F Ambient with Maximum Decay Heat and Maximun Solar Load, Time: 0.5 Hr 3-80
Figure 3.38. Case 3, Contour Plot — Fuel Divider Model, Transient Thermal Analysis, Fire Accident, 100°F Ambient with Maximum Decay Heat and Maximun Solar Load, Time: 14.0 Hr 3-81

Figure 3.39. Cases 2 and 3 — Fire Accident Transient, Fuel Temperature Versus Time 3-81
Figure 3.40. TRIGA LIBRA FEA Model for Cases I and II 3-83
Figure 3.41. TRIGA LIBRA FEA Model for Case III 3-84
Figure 3.42. Aluminum-Clad Triga Fuel — Steady State Thermal Analysis, 100°F Ambient with Maximum Decay Heat and Maximum Insolation 3-86
Figure 3.43. Stainless Steel Clad TRIGA Fuel, 1.475" Diameter: Steady State Thermal Analysis, 100°F Ambient with Maximum Decay Heat and Maximum Insolation 3-87
Figure 3.44. Incoloy 800 Clad Triga Fuel, 0.452" Diameter — Steady State Thermal Analysis, 100°F Ambient with Maximum Decay Heat and Maximum Insolation 3-88

Figure 5.1. MCNP Model of the Shipping Cask and Overpack (Normal Condition) 5-10
Figure 5.2. Normal Condition Shielding Analysis Dose Points 5-11
Figure 5.3. Accident Condition Shielding Analysis Dose Points 5-12
Figure 5.4. Model 2000 Cask with Short Divider 5-137

Figure 6.1. Model 2000 Transport Packaging 6-3
Figure 6.2. MTR Type Fuel Divider for the Model 2000 Shipping Cask 6-4
Figure 6.3. Fuel Element Schematic for TRIGA Case XVII and Case V Fuels 6-7
Figure 6.4. TRIGA Case VIII Fuel Element 6-8
Figure 6.5. MTR Type Fuel Dimensions 6-18
Figure 6.6. Side View of Model 2000 Cask Schematic (Contents and Support Structure Not Shown) 6-29
Figure 6.7. Top View of Fuel Support Structure Schematic 6-30
Figure 6.8. MTR Case I Fuel (94% Enriched U3O8), Infinite Cask Array 6-48
Figure 6.9. MTR Case II Fuel (20% Enriched U3Si2), Infinite Cask Array 6-48
Figure 6.10. MTR Case III Fuel (94% UAlx), Infinite Cask Array 6-49
Figure 6.11. MTR Case IV Fuel (95% U Metal), Infinite Cask Array 6-49
Figure 6.12. TRIGA Case VIII Fuel, 93% Enrichment, Single Container Case, 493.9g 6-55
Figure 6.13. TRIGA Case VIII Fuel, 93% Enrichment, Normal Array Case, 493.9g of U-235 6-55
Figure 6.14. TRIGA Case VIII Fuel, 93% Enrichment, Accident Array, 493.9g of U-235 6-56
Figure 6.15. TRIGA Case VIII Fuel, 93% Enrichment, 493.9g of U-235, Accident Array, 20% Water Weight 6-56
Figure 6.16. TRIGA Case XVII Fuel, 70% Enrichment, Infinite Cask Array 6-57
Figure 6.17. TRIGA Case V Fuel, 94% Enrichment, Infinite Cask Array 6-57
Figure 6.18. TRIGA Case VIII Fuel, 94% Enrichment, Infinite Cask Array 6-58
Figure 6.19. Flux-Weighted Bias Curve 6-66
Figure 6.20. Normal Container for MTR Case I Fuel — Top View 6-70
Figure 6.21. Single Container for MTR Case I Fuel — Top View 6-73
Figure 6.22. Accident Array for MTR Case I Fuel — Top View 6-75
Figure 6.23. Unit Array for MTR Case I Fuel — Top View 6-77
Figure 6.24. Normal Container for MTR Case II Fuel — Top View 6-96
Figure 6.25. Single Container for MTR Case II Fuel — Top View 6-99
Figure 6.26. Accident Array for MTR Case II Fuel — Top View 6-101
Figure 6.27. Unit Array for MTR Case II Fuel — Top View 6-103
Figure 6.28. Unit Array for MTR Case III Fuel — Top View 6-118
Figure 6.29. Unit Array for MTR Case IV Fuel — Top View 6-132
Figure 6.30. Unit Array for TRIGA Case XVII Fuel — Top View 6-147
Figure 6.31. Unit Array for TRIGA Case V Fuel — Top View 6-159
Figure 6.32. Normal Container for TRIGA Case VIII Fuel — Top View 6-187
Figure 6.33. Single Container for TRIGA Case VIII Fuel — Top View 6-189
Figure 6.34. Accident Array for TRIGA Case VIII Fuel — Top View 6-192
Figure 6.35. Unit Array for TRIGA Case VIII Fuel — Top View 6-195
Figure 6.36. TSR Fuel Shipping Rack (Elevation) 6-219
Figure 6.37. TSR Top Compartment Depicting the Fuel Dividers 6-220
Figure 6.38. GEMER Geometry Model for Modeling the TSR Fuel Assemblies 6-223

Figure 6.39. TSR Fuel, Infinite Cask Array (94% Enriched Fuel) 6-230
Figure 6.40. Normal Container for TSR Fuel — Top View 6-232
Figure 6.41. Single Container for TSR Fuel — Top/Side View 6-235
Figure 6.42. Accident Array for TSR Fuel — Top/Side View 6-238
Figure 6.43. Unit Array for TSR Fuel — Top/Side View 6-241
Figure 6.44. Unit Cask Schematic 6-273
Figure 6.45. ICM K.effectives 6-275
Figure 6.61. MTR Type I Fuel, Sensitivity of the Number of Fuel Plates 6-296
Figure 6.62. MTR Type I Fuel, Infinite Cask Array, Water Variation for the 14-Plate and 17-Plate Cases 6-296
Figure 6.63. MTR Type I Fuel, Infinite Cask Array, Pitch Sensitivity for the 14-Plate and 17-Plate Cases 6-297
Figure 6.64. MTR Type II Fuel, Infinite Cask Array 6-299
Figure 6.65. MTR Type III Fuel, Infinite Cask Array 6-301
Figure 6.66. MTR Type IV Fuel, Infinite Cask Array 6-303
Figure 6.67. Sectional View (Z = 5 cm) for MTR Type I Fuel 6-324
Figure 6.68. Sectional View (Z = 60 cm) for MTR Type I Fuel 6-325
Figure 6.69. Sectional View (Z = 130 cm) for MTR Type I Fuel 6-326
Figure 6.70. Side View for MTR Type I Fuel 6-327
Figure 6.71. Sectional View (Z = 5 cm) for MTR Type II Fuel 6-335
Figure 6.72. Sectional View (Z = 60 cm) for MTR Type II Fuel 6-336
Figure 6.73. Sectional View (Z = 130 cm) for MTR Type II Fuel 6-337
Figure 6.74. Side View for MTR Type II Fuel 6-338
Figure 6.75. Sectional View (Z = 5 cm) for MTR Type III Fuel 6-346
Figure 6.76. Sectional View (Z = 60 cm) for MTR Type III Fuel 6-347
Figure 6.77. Sectional View (Z = 130 cm) for MTR Type III Fuel 6-348
Figure 6.78. Side View for MTR Type III Fuel 6-349
Figure 6.79. Sectional View (Z = 5 cm) for MTR Type IV Fuel 6-357
Figure 6.80. Sectional View (Z = 60 cm) for MTR Type IV Fuel 6-358
Figure 6.81. Sectional View (Z = 130 cm) for MTR Type IV Fuel 6-359
Figure 6.82. Side View for MTR Type IV Fuel 6-360
Figure 6.83. GEMER Results — Infinite Cask Scenario for TRIGA Case XVII Fuel (Discrete Model, Fuel Pin Sensitivity) 6-377
Figure 6.84. TRIGA Case XVII Fuel, Infinite Cask Array, Water Variation for the 4 out of 4 Pins and 3 out of 4 Pins Cases 6-378
Figure 6.85. TRIGA Case XVII Fuel, Infinite Cask Array, Pitch Sensitivity Variation for the 4 out of 4 Pins Cases 6-379
Figure 6.86. GEMER Results — Infinite Cask Scenario for TRIGA Case V Fuel (Discrete Model, Fuel Pin Sensitivity) 6-387
Figure 6.87. TRIGA Case V Fuel, Infinite Cask Array, Water 6-388
Figure 6.88. TRIGA Case V Fuel, Infinite Cask Array, Pitch Sensitivity 6-389
Figure 6.89. GEMER Results — Infinite Cask Scenario for TRIGA Case VIII Fuel (Discrete Model, Fuel Pin Number Sensitivity) 6-397
Figure 6.90. GEMER Results — Infinite Cask Scenario for TRIGA Case VIII Fuel, Water Density Variation for the 19/20 out of 20 Pins and 15/16 out of 16 Pins Sensitivity) 6-398
Figure 6.91. TRIGA Case XVIII Fuel, Infinite Cask Array, Pitch Sensitivity for the 15 Pins x 44 Grams and 20 Pins x 33 Grams Cases 6-399
Figure 6.92. Sectional View (Z = 5 cm) for TRIGA Case XVII Fuel 6-408
Figure 6.93. Sectional View (Z = 40 cm) for TRIGA Case XVII Fuel 6-409
Figure 6.94. Sectional View (Z = 130 cm) for TRIGA Case XVII Fuel 6-410
Figure 6.95. Side View for TRIGA Case XVII Fuel 6-411
Figure 6.96. Sectional View (Z = 5 cm) for TRIGA Case V Fuel 6-420
Figure 6.97. Sectional View (Z = 40 cm) for TRIGA Case V Fuel 6-421
Figure 6.98. Sectional View (Z = 130 cm) for TRIGA Case V Fuel 6-422
Figure 6.99. Side View for TRIGA Case V Fuel 6-423
Figure 6.100. Sectional View (Z = 5 cm) for TRIGA Case VIII Fuel 6-433
Figure 6.101. Sectional View (Z = 40 cm) for TRIGA Case VIII Fuel 6-434

Figure 6.102. Sectional View (Z = 130 cm) for TRIGA Case VIII Fuel 6-435
Figure 6.103. Side View for TRIGA Case VIII Fuel 6-436
Figure 6.104. MTR Type III-B Fuel, Infinite Cask Array, 68.9-Mil Fuel Meat Thickness and 15-Mil Clad Thickness 6-451

Figure 7.1. MTR Type Fuel Shipping Divider 7-4
Figure 7.2. Typical Vacuum Drying System Set Up and Equipment 7-6

Figure 8.1 Cask Shielding Inspection Points 8-5
Figure 8.2 Thermocouple Locations 8-6

1. GENERAL INFORMATION

This Safety Analysis Report describes and evaluates a fuel divider and basket developed for transportation of MTR-type fuel assemblies, TRIGA fuel assemblies, and sections of the Tower Shielding Reactor (TSR) core in a Model 2000 Transport Package. The fuel divider contains MTR-type fuels and TRIGA fuel assemblies within the rectangular cross sections of the divider during transportation. The basket contains the TSR fuel assembly components. Drawings of the subject divider and basket are included in Appendix 1.4.1.

The complete description and evaluation of the Model 2000 Transport Package is described in the Model 2000 Radioactive Material Transport Package Safety Analysis Reports, References [1.1] and [1.2].

1.1 INTRODUCTION

The fuel divider has been developed to transport MTR-type fuel assemblies with rectangular cross section (or the element's fuel region) in the Model 2000 Packaging (United State Nuclear Regulatory Commission, USNRC, Model 2000, Certificate of Compliance No. 9228). The fuel divider is also designed to transport TRIGA fuel assemblies. The basket is used to transport the TSR fuel core components. No modification to the Model 2000 packaging containment boundary is required to accommodate either the MTR-type or TRIGA fuels in the divider or sections of the TSR fuel in the basket. The divider and basket have no significant effect on the design, operating characteristics, or safety performance of the packaging, as described in the Safety Analysis Reports [1.1] and [1.2].

The Model 2000 Package is currently licensed for transport of irradiated fuel rods which may be cut or segmented, HFIR fuel assembly, limited to 600 watts of decay heat, and MTR-type fuel assemblies including the TSR fuel limited to 1500 watts. It is also licensed for byproduct, source or special nuclear material, in solid form, limited to 2000 watts of decay heat. The total weight including carrier baskets, shoring or secondary containers must not exceed 5450 lb. The fissile contents of the authorized irradiated fuel must have the following characteristics:

a) "Not to exceed 1175 grams U^{235} equivalent mass with initial enrichment not to exceed 5 weight percent in the fissile isotope; minimum pellet diameter of 0.3 inch, maximum burnup of 45 GWd/MTU, and minimum cooling time of 120 days," or

b) "Not to exceed 1750 grams U^{235} equivalent mass with initial enrichment not to exceed 5 weight percent in the fissile isotope; minimum pellet diameter of 0.35 inch, maximum burnup of 38 GWd/MTU, and minimum cooling time of 120 days."

c) "Irradiated High Flux Isotope Reactor (HFIR) fuel assembly, positioned within the HFIR fuel basket and liner as licensed."

d) "Byproduct, source, or special nuclear material in solid form, with a maximum decay heat of 2000 watts. Fissile content not to exceed 500 grams U^{235} equivalent mass."

e) "MTR-type fuel elements including the TSR fuel with a maximum decay heat of 1500 watts. Fissile content not to exceed 710 grams of U^{235} per divider position."

In this revision of the Safety Analysis Report, authorization is sought for the use of the MTR-type fuel divider to transport several types of TRIGA fuels and MTR-type fuels with enrichment up to 94% and the addition of MTR-type U_{metal} fuel meat composition with 95% enrichment. Previously, authorization was sought (Revision 1a) for TRIGA fuel and MTR-type fuels with enrichments up to 93.2%, 120 days minimum decay time, and a Transportation Index (TI) of zero (0.0).

The MTR-type generic fuel element used in the evaluation of the divider is primarily an aluminum construction assembly of composite fuel plates. The individual fuel plates are composed of a fuel matrix clad with aluminum. The fuel elements contain up to a total of 355 gm U^{235} with an enrichment up to 94%. The maximum U^{235} content per shipment, based on criticality limit, is 14,910 grams for U_3O_8 fuel, 14,595 grams for U_3Si_2 fuel, 23,352 grams for UAl_x fuel, and 4620 grams for U_{metal} fuel for a TI of zero (refer to Chapter 6 for details). The maximum weight of each assembly, including the fuel and all required hardware, is not to exceed 42.8 lb. per divider cell. The minimum cooling time of each assembly is 120 days with the maximum decay heat generation per fuel cell of 120 watts maximum with a distribution of 85 watts maximum for the lower half of the fuel cell and a maximum of 35 watts in the upper half of the fuel cell. The maximum decay heat per shipment is limited to 1500 watts.

Table 1.1 provides dimensions and nuclear data for several MTR-type fuel which are enveloped by a generic element used for this analysis.

The TRIGA fuel assemblies consist of cylindrical zirconium hydride fuel elements with or without graphite reflectors within an aluminum, stainless steel, or inconel cladding. Figures 1.7 and 1.8 show a typical TRIGA fuel elements. Table 1.2 provides dimensions and nuclear data for some typical TRIGA fuel elements. The TRIGA fuel elements are transported within the same divider as the MTR type fuel-assemblies. Multiple TRIGA fuel elements may be transported in each divider cell. The configuration is limited by geometry and U^{235} content of the TRIGA fuel elements. The maximum U^{235} content of the TRIGA fuel, based on the criticality limit, in each of the 21 divider cells shall not exceed 1370 grams for enrichment up to 70% (28,777 grams per shipment), 1219 grams per cell for up to 94% enrichment with graphite reflector (25,599 grams per shipment), and 494 grams per cell for up to 94% enrichment without graphite reflector (10,374 grams per shipment), all with a TI of zero (refer to Chapter 6 for details). The minimum cooling time of each assembly is 120 days, with the same decay heat limits per fuel cell and per shipment as for the MTR fuel. The maximum allowable weight of the TRIGA fuel assemblies including shoring devices shall not exceed 42.8 lb. per divider cell. The maximum weight of the MTR-type fuel divider, loaded with TRIGA fuel assemblies, shall not exceed 5450 lb., the maximum allowable payload of the Model 2000 package.

The TSR fuel core consists of 25 sub-assemblies of aluminum-clad fuel matrix assembled to form a sphere. The total fuel loading of the TSR fuel core assembly is 8451 gm of U235. The TSR fuel core, the only one in existence, with four additional sub-assemblies (lune plates currently in storage), shall be transported in a minimum of two shipments.

1.2 PACKAGE DESCRIPTION

1.2.1 Packaging

The Model 2000 Packaging is a cylindrical cask transported in the upright position inside an overpack structure. The overpack has toroidal shell impact limiters at each end (see Figure 1.1). The approximate overall packaging dimensions are 131.5 inches in height and 72 inches in diameter. The approximate gross weight of the package is 33,350 lb.

The cask is constructed of two 1-inch thick type 304 stainless steel concentric cylindrical shells (see Figure 1.2). The shells are joined at the bottom end to a 6-inch thick type 304 stainless steel forging. The annulus between the two shells is approximately 4 inches wide and is filled with lead. The cask has an approximate height of 71 inches and an outer diameter of 38.5 inches. The cask cavity is approximately 26.5 inches in diameter and 54 inches in depth. The cask lid is made of type 304 stainless steel and lead. It has a stepped design, and is fully recessed into the cask top flange. The lid is secured to the cask body by fifteen 1-1/4 inch diameter socket head screws. The cask is sealed by elastomeric O-rings bonded to a thin aluminum disc-shaped ring. The cask has a seal test port in the side of the cask body, a vent port in the cask lid, and a drain port near the bottom of the cask. The cask body has attachment plates for lifting devices which are detached during transport.

The cask is positioned within an overpack constructed from two 0.5-inch thick type 304 stainless steel concentric cylindrical shells (see Figure 1.3). The shells are separated radially by eight equally spaced tubes along the length of the shells and by two tube sections around the perimeter of the shells. A toroidal shell impact limiter made of type 304 stainless steel is attached to each end of the overpack shells. The overpack opens just above the lower impact limiter for access to the cask. The top section of the overpack is joined to the base by 15 1-3/8 inch diameter shoulder screws. Gussets on the top and bottom impact limiters provide tie-down points for the package.

The cask sits within the overpack structure on a 0.5-inch thick, 42-inch diameter plate with 8 square cross-section prongs welded to the plate perimeter. The prongs assure cask concentricity within the overpack. This plate is referred to as the Cask Support plate. The Cask Support plate material of construction is primarily type 304 stainless steel. There is an optional version of the Cask Support plate made with a 27-inch diameter tungsten alloy insert in the central section of the plate. This optional plate provides additional shielding at the package bottom.

The fuel divider is installed in the Model 2000 cask cavity to position and maintain separation of fuel elements from each other and provides additional shielding. Figure 1.4 depicts the divider assembly in its shipping configuration. Since the divider is intended to ship various sizes of MTR- and TRIGA-type fuel elements, a shoring tube can be used to accommodate different fuel cross sections and avoid rattling of the elements in the fuel cell. A spacer can also be used to occupy axial space in the fuel cell for shorter length fuel elements.

The fuel divider is composed of five solid blocks of type 304 stainless steel forgings. The five blocks are bolted together with four threaded rods. Each threaded rod is welded at each end of the divider. Twenty-one rectangular cells are machined in the divider to position fuel elements.

The TRIGA fuel elements are transported within the same fuel dividers as the MTR-type fuel assemblies. The divider is intended to ship various sizes of TRIGA fuel elements. Multiple TRIGA fuel elements may be placed in each divider cell within the limits of geometry and U^{235} content. Adapters and spacers (shoring device) can be used to accommodate fuel of various cross sections and lengths.

FIGURE WITHHELD UNDER 10 CFR 2.390

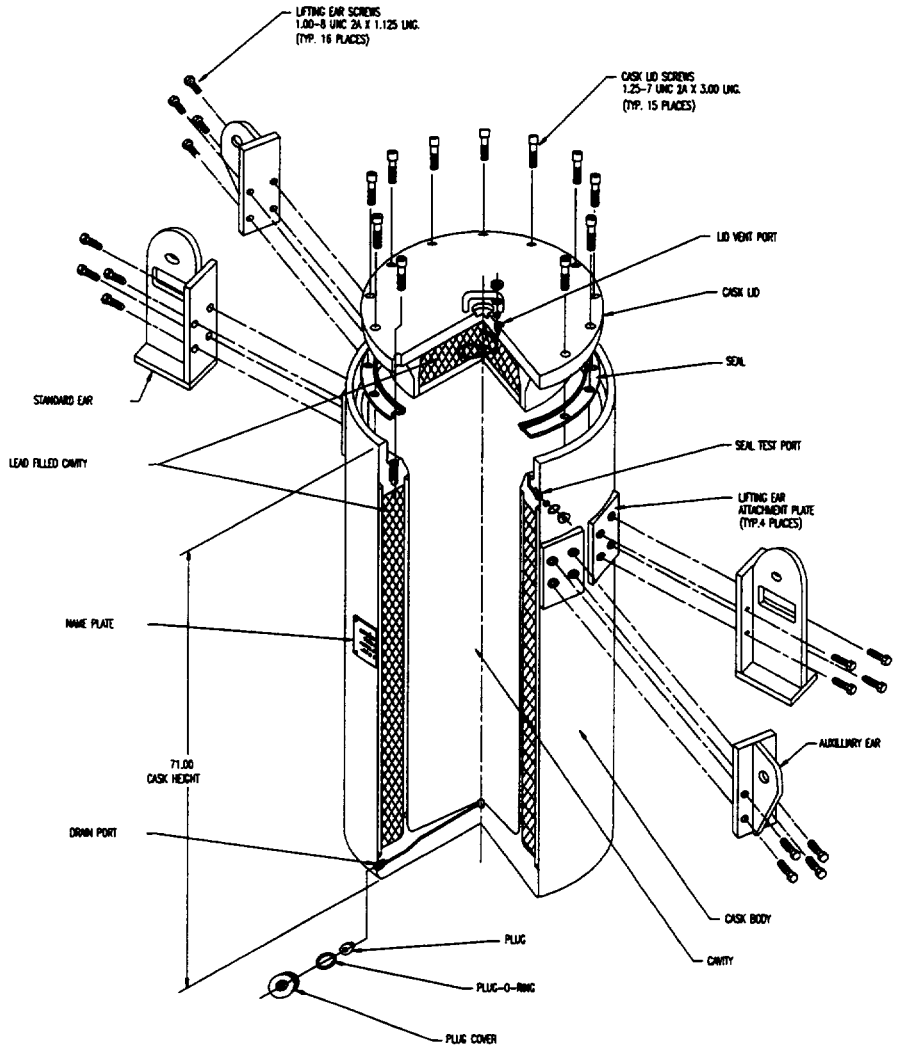

MODEL 2000 TRANSPORT PACKAGING

- CASK -

SK-93-162
VC-SK931621

Figure 1.2. Model 2000 Transport Packaging, Cask

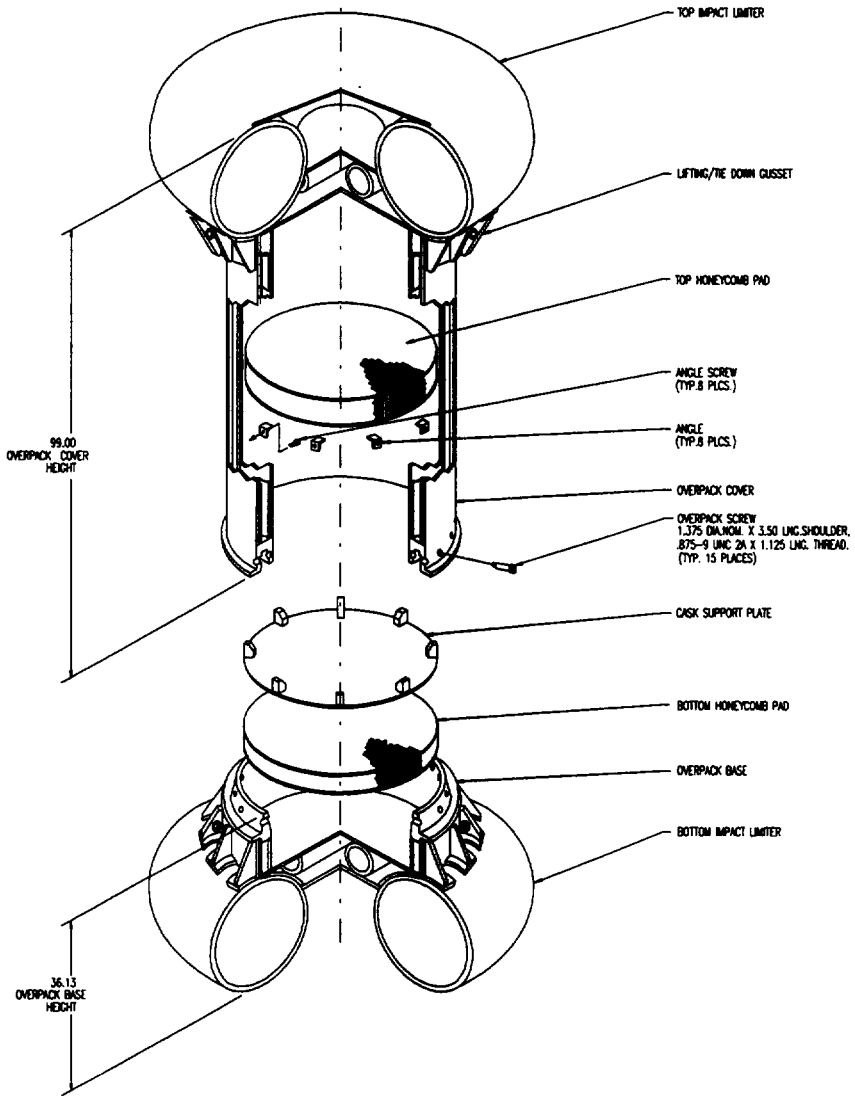

MODEL 2000 TRANSPORT PACKAGING
- OVERPACK -

SK-93-161
VC-SK931611

Figure 1.3. Model 2000 Transport Packaging, Overpack

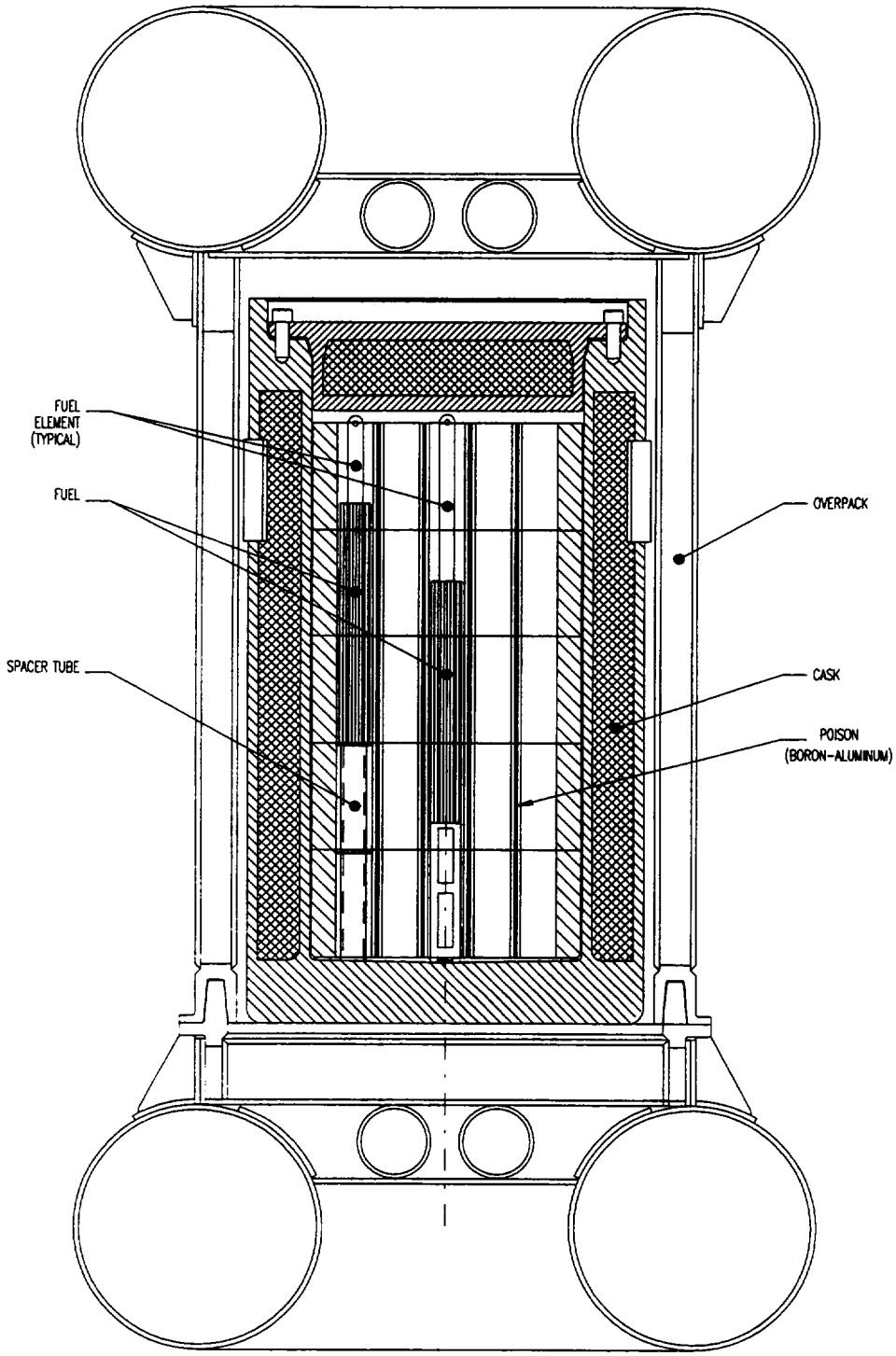

Figure 1.4. MTR-Type Fuels Shipping Configuration

An additional twenty-four slots are machined in the divider between certain fuel element cells to contain borated aluminum plates. Four pads are welded on the bottom surface of the divider to facilitate water drainage from the cask cavity. Four threaded holes, with keenserts, are located on the top surface of the divider for lifting purposes. The bottom divider edge is radiused to center the divider inside the cask. Figure 1.5 depicts the fuel divider.

The TSR fuel basket is a stainless steel weldment of plate, tubing and pipe designed to fit inside the Model 2000 cask cavity. The TSR fuel basket is a three piece (stacking sections) assembly with cavities for the various TSR fuel elements, and is designed to accept just over one-half of the TSR fuel elements. The three basket sections are designed to maintain separation of the TSR fuel elements under worst case accident conditions.

The lower of the three sections of the TSR fuel basket can hold up to four Upper Fuel Elements or four Lower Fuel Elements, as shown in Figure 1.6. Total fuel loading in the lower section is limited to a maximum of 1412 grams of U^{235}. The section consists of a 26-1/4 inch OD by 14-3/8 inch high thick stainless steel tube welded to a stainless steel base plate. The pie-shaped fuel elements are contained in a compartment constructed of 3/8 inch stainless steel plate and a central stainless steel pipe. The stainless steel pipe extends up to the top of the basket to serve as a lifting bar for the basket.

The middle section of the TSR fuel basket can hold up to four Fuel Cover (Lune) Plates, as shown in Figure 1.6. Total fuel loading in the middle section is limited to a maximum of 304 grams of U^{235}. This section consists of a 26-1/4 inch OD by 11-5/8 inch high thick stainless steel tube welded to a stainless steel base plate. Each of the fuel elements is shored by stainless steel rods welded to the base plate.

The upper TSR fuel basket section can hold up to six Annular Fuel Elements and one Cylindrical Fuel Element, as shown in Figure 1.6. Total fuel loading in the upper section is limited to a maximum of 2677 grams of U^{235}. This section consists of a 26-1/4 inch OD by 27-3/8 inch high thick stainless steel tube welded to a stainless steel base plate. The annular fuel elements are contained in compartments constructed of 3/8 inch stainless steel plate and a centrally positioned stainless steel pipe. The cylindrical fuel element is contained in a separate compartment confined by two annular fuel element divider walls.

All TSR fuel basket cavities and sections contain water drain passages compatible with the Model 2000 Cask drainage system.

The General Electric Quality Assurance Program (QAP-1) used for the design, manufacture, and maintenance of the Model 2000 packaging, the MTR-type fuels divider, and TSR fuel basket satisfies the eighteen criteria of 10CFR71, Subpart H [1.3]. QAP-1 [1.4] has been approved by the USNRC under Docket 71-0170.

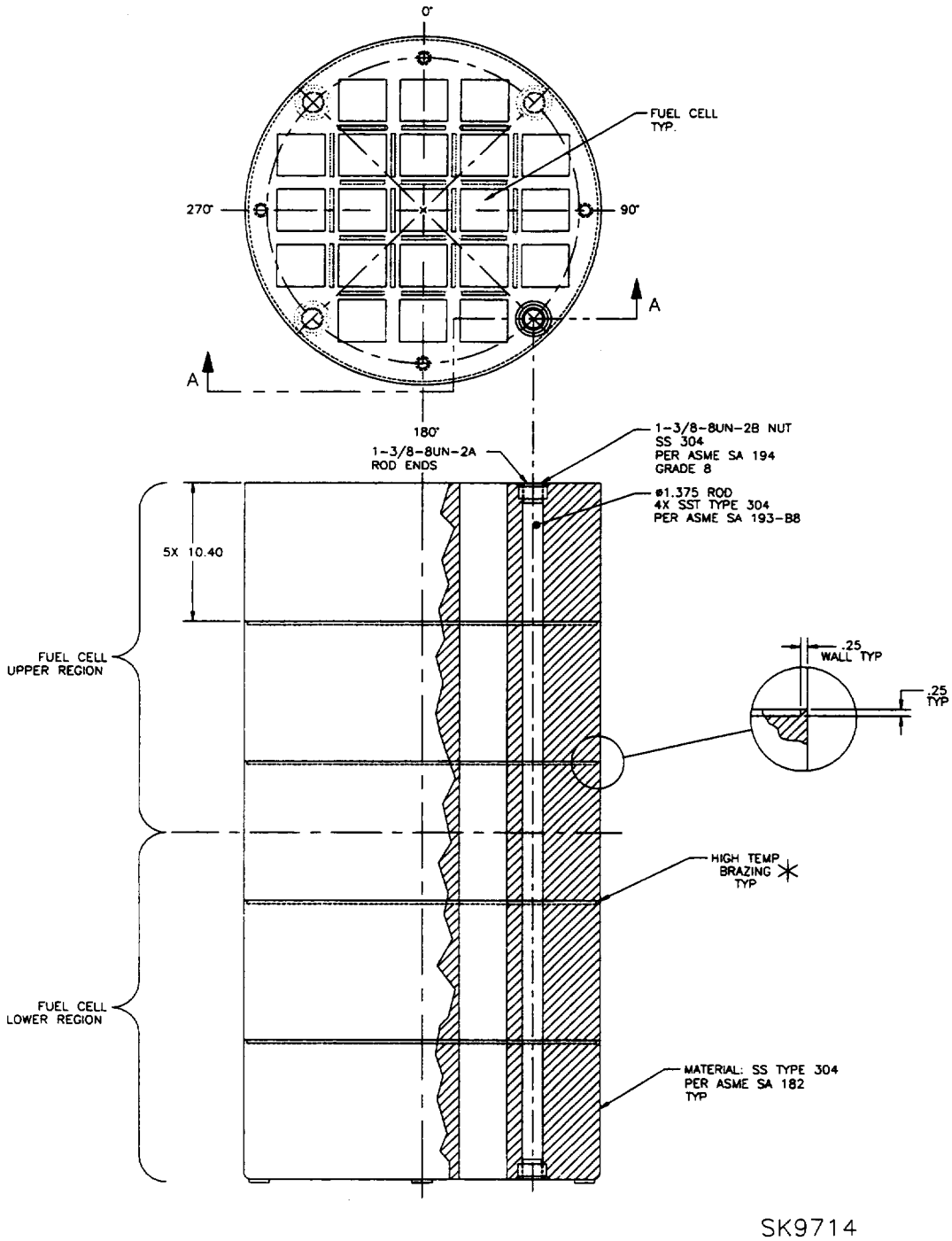

Figure 1.5. MTR-Type Fuel Shipping Divider

1.2.2 Operational Features

The use of the MTR-type fuels divider or the TSR fuel basket in the Model 2000 Package does not change or introduce any new operational features to the Package. The MTR fuel elements, including TSR fuel, or TRIGA fuel elements are loaded in the Model 2000 cask dry or underwater. All wet-loaded operation with this cask requires that the cask cavity be drained and vacuum-dried to remove any residual moisture. To vacuum dry the cask, the cavity pressure is reduced below the vapor pressure of water and maintained at or below this pressure level for a period of time.

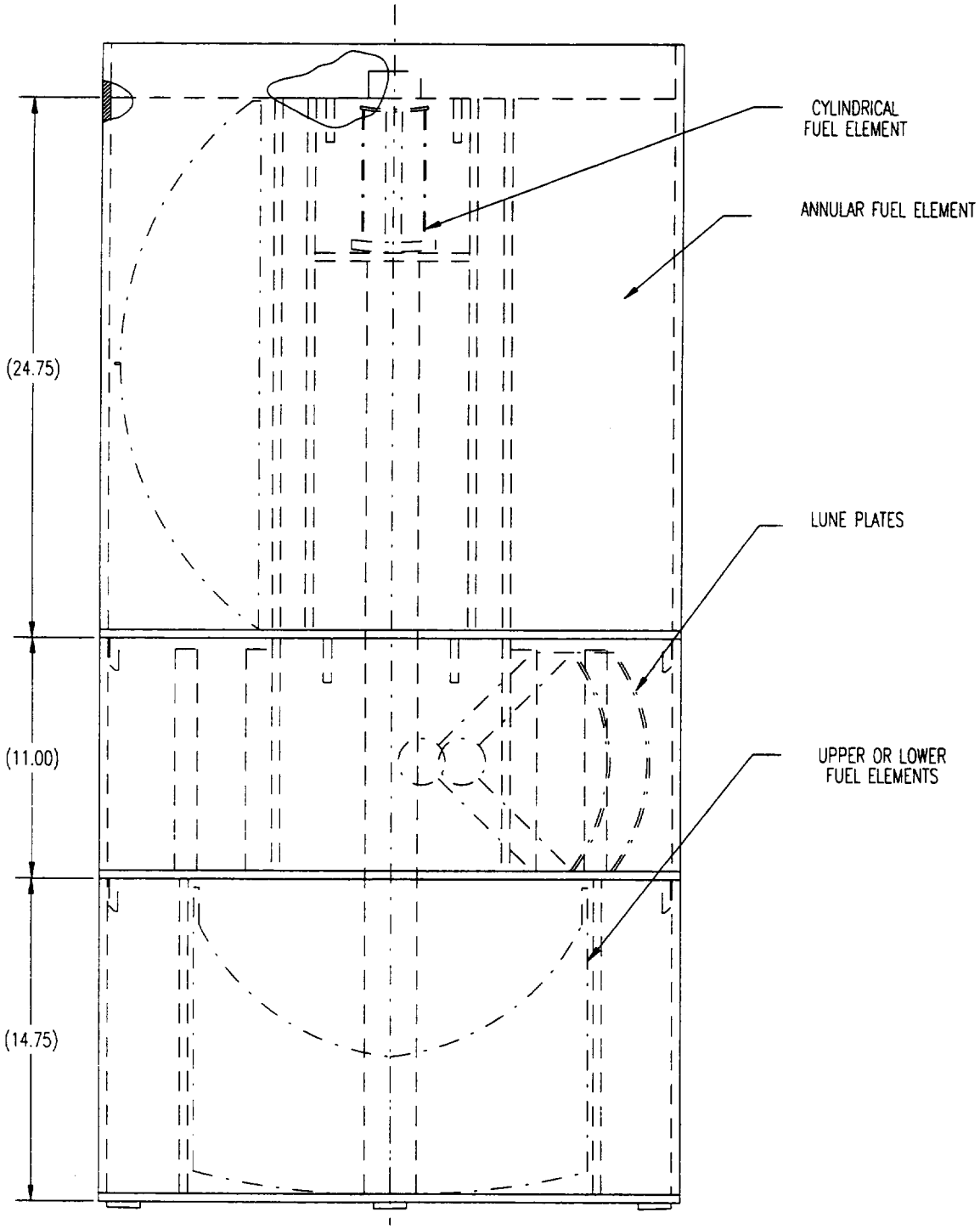

Figure 1.6. TSR Fuel Basket

1.2.3 Contents of Packaging

The Model 2000 Package is used to transport Type B quantities of radioactive materials and fissile materials (Class III). This includes byproduct, source, and special nuclear materials. This report addresses MTR-type fuels of several chemical composition, TRIGA fuels, and TSR fuel up to 1500 watts of decay heat as authorized content when shipped in the divider or basket described in this Chapter.

The MTR-type typical fuel element is primarily an aluminum construction assembly of composite fuel plates. The individual fuel plates are composed of a fuel-containing matrix completely clad with aluminum. The plates with a separation distance are peened and welded to aluminum side plates to form the fuel region of the element. The fuel element end pieces made of aluminum may be left attached to the fuel region to provide handling and spacing during shipment. The MTR-type fuel elements evaluated for shipment in the Model 2000 Packaging using the divider (GE Drawing 105E9557) are bounded by the parameters summarized in Table 1.0A.

Table 1.0A. Bounding Parameters for MTR-Type Fuel Elements

	Fuel Type (chemical composition)	U_3O_8	U_3Si_2	UAl_x	U_{metal}
Nuclear	Max. mass U^{235} per fuel cell, gm	710	695	1112	220
	Max. number of fuel elements per shipment	42	42	42	42
	Max. mass U^{235} per shipment, gm	14,910	14,595	23,352	4620
	Enrichment, %	≤ 94	≤ 20	≤ 94	≤ 95
	Max. Burnup, Mwd/t	568,000(1)	122,000(1)	568,000(1)	568,000(1)
	Min. cooling time, days	120	120	120	120
Structural	Max. weight per fuel cell, lb.	42.8	42.8	42.8	42.8
	Max.Total weight of content (2)	5450	5450	5450	5450
Thermal	Max. content decay heat per shipment, watts (refer to Chapter 3)	1500	1500	1500	1500
	Max. content decay heat per fuel divider cell, watts (refer to Chapter 3)	120	120	120	120
	Max. content decay heat lower region fuel cell, watts	85	85	85	85
	Lower region,total, watts	765(3)	765(3)	765(3)	765(3)
	Max. content decay heat upper region fuel cell, watts	35	35	35	35
	Upper region,total, watts	735(3)	735(3)	735(3)	735(3)
Shielding	Content to be within the radiation source terms provided in Tables 5.2A and 5.2B, and the external radiation standards in 10CFR71.47. Since the total burnup and decay time of the U_{metal} fuel are within those of the other fuel types, the source terms provided in these tables bound this case.				

(1) At 75% burnup and maximum enrichment.

(2) Weight includes fuel, spacer, divider, and any additional required shoring device.

(3) Within the boundary of the shielding analysis in Chapter 5.

Table 1.1 provides dimensions and nuclear data for several MTR-type fuels.

The TSR fuel, special MTR type fuel, consists of 25 sub-assemblies of aluminum-clad fuel matrix assembled to form a sphere. There are only one core, sphere, and four sub-assemblies referred as lune plate in existence The total fuel loading of the TSR fuel core and the four subassemblies is 8687 gm of U^{235}. Each of the sub-assemblies contains 54 gm of U^{235}. The fuel plate construction is basically the same as the rectangular cross-sectioned MTR-type fuels which consists of an aluminum-clad sandwich of uranium-aluminum alloy. The TSR fuel core, and the four sub-assemblies (lune plates currently in storage), shall be transported in a minimum of two shipments using the TSR Rack, GE drawing 105E9560.

The TSR fuel characteristics are as follows:

Total mass U^{235} per shipment	4393 gm(1)
Enrichment	93.2%
Burnup	2000 MwH
Min. cooling time	450 day
Max. content decay heat	35 watts
Max. sub-assembly weight per shipment	1368 lb. (2)

(1) 1412 gm lower, 304 gm middle, and 2677 gm upper rack compartments

(2) Includes the weight of the rack.

The typical TRIGA fuel assemblies consists of cylindrical zirconium hydride fuel elements with or without graphite reflectors within an aluminum, stainless steel, or inconel cladding and an outside diameter of 0.51 to 1.47 inches (aluminum clad fuel elements are 1.47 inches in diameter, with up to 20% U^{235} enrichment). Table 1.2 provides dimensions and nuclear data for several TRIGA type fuels. Figures 1.7 and 1.8 show a typical TRIGA fuel element. The TRIGA fuel assemblies evaluated for shipment in the Model 2000 Packaging using the divider (GE Drawing 105E9557) shall be bounded by the parameters shown in Table 1.0B.

Table 1.0. Bounding Parameters for TRIGA-Type Fuel Elements

	Fuel Type (chemical composition)	$UZrH_x$	$UZrH_x$, graphite reflector	$U\ ZrH_x$ w/o. graphite reflector
Nuclear	Max. mass U^{235} per fuel cell, gm	1370	1219	494
	Max. mass U^{235} per shipment, gm	28,770	25,599	10,374
	Max. number of 1-1/2" diameter elements per cell	4	4	4
	Max. number of 1/2" diameter elements per cell	20	20	20
	Enrichment, %	≤ 70	≤ 94	≤ 94
	Burnup, Mwd/t	427,000(1)	568,000(1)	568,000(1)
	Min. cooling time, days	120	120	120
Structural	Max. weight per fuel cell, lb.	42.8	42.8	42.8
	Max. total weight of content(2)	5450	5450	5450
Thermal	Max. content decay heat per shipment, watts (refer to Chapter 3), SS clad (Al clad)	1500 (630)	1500 (630)	1500
	Max. content decay heat per fuel cell, watts (refer to Chapter 3), SS clad (Al clad)	120 (30)	120 (30)	120
	Max. content decay heat lower region of fuel cell, watts, SS clad (Al clad)	85 (30)	85 (30)	85
	Lower region, total watts(3), SS clad (Al clad)	765 (630)	765 (630)	765
	Max. content decay heat upper region of fuel cell, watts, SS clad (Al clad)	35 (30)	35 (30)	35
	Upper region, total watts(3), SS clad (Al clad)	735 (630)	735 (630)	735
Shielding	Content to be within the radiation source terms provided in Tables 5.2A and 5.2B, and the external radiation standards in 10CFR71.47			

(1) At 75% burnup and maximum enrichment.

(2) Weight includes fuel, spacer, divider, and any additional required shoring device.

(3) Within the boundary of the shielding analysis in Chapter 5.

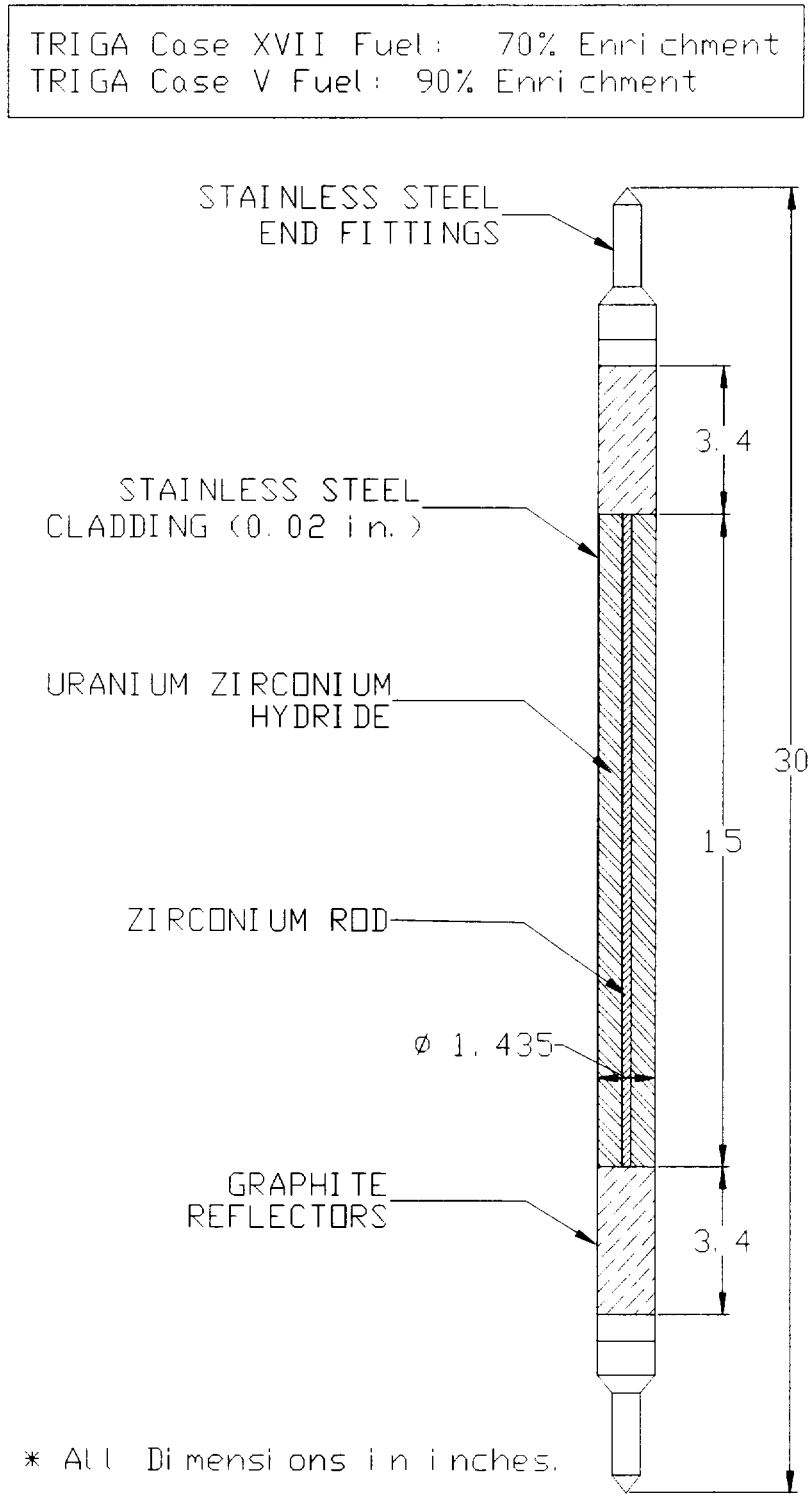

Figure 1.7. Fuel Element Schematic for TRIGA Case XVII and Case V Fuels

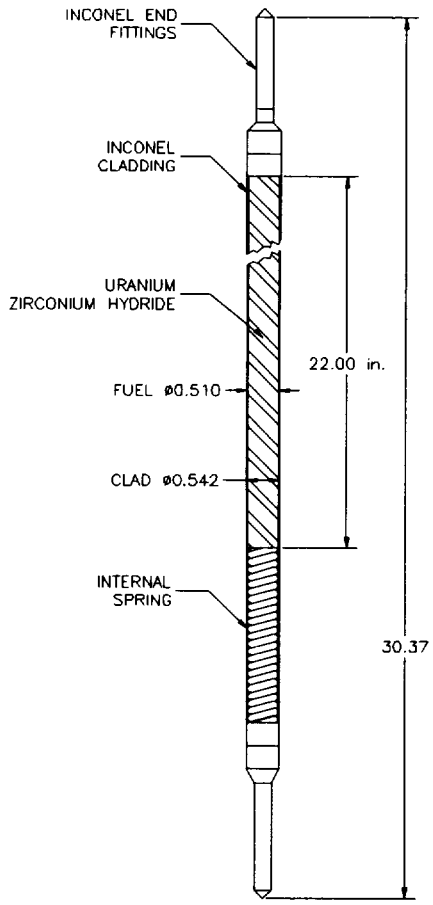

Figure 1.8. TRIGA Case VIII Fuel Element

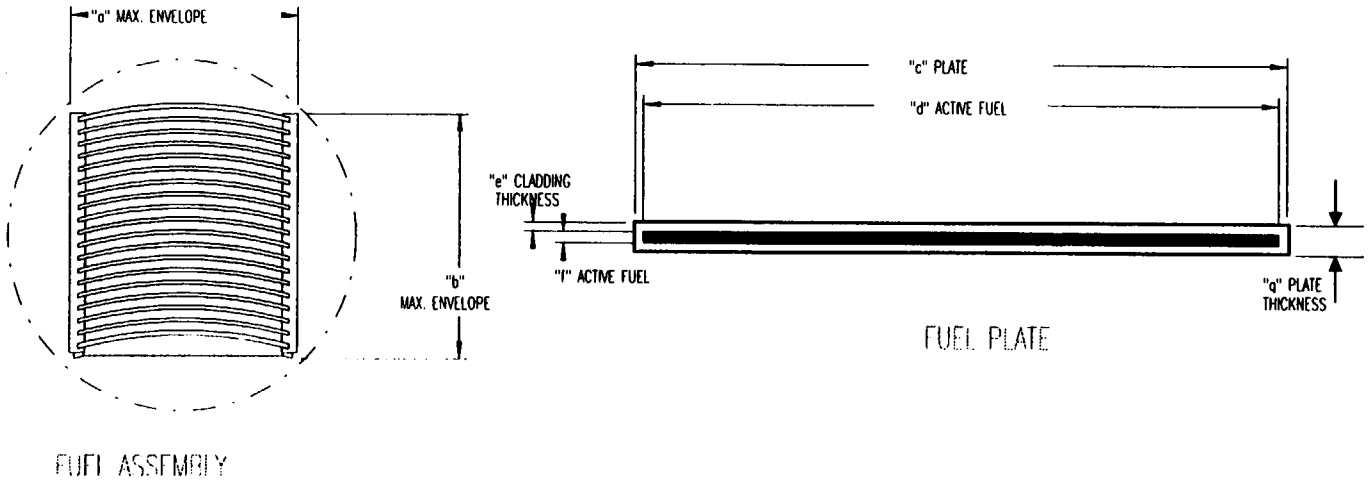

Table 1.1. MTR-Type Fuel Nuclear Data

FUEL TYPE		GEOMETRY											NUCLEAR DATA					
			FUEL DIMENSION (IN)															
REACTOR	CLASS	TRIMMED LENGTH (IN)	a	b	c	d	e	f	g	Lf	La	Le	MAX TOTAL g U-235	MAX U-235 g per Plate	MAX No. of Fuel Plate/Elem	NOMINAL ENRICHMT (%)	BURNUP (MWd)	BURNUP (%)
BSR	MTR	n/a	2.996	3.313	2.799	2.500	0.015	0.020	0.051	27.125	23.530	37.125	223	11.700	19	93.0	88	40
HFBR	MTR	24.625	2.878	3.218	2.611	2.236	0.014	0.023	0.050	23.750	22.856	57.250	355	19.5+3g	18	93.0		44-48
ORR	MTR	n/a	3.034	3.188	2.800	2.500	0.015	0.020	0.050	24.625	23.625	38.375	344	18.000	19	20.0	20-172	6-50
OWR	MTR	n/a	3.017	3.303	2.796	2.456	0.015	0.020	0.050	24.625	23.538	42.625	235	12.210	19	93.0		50
TSR													8369				83.300	
NBSR	MTR	13.313	3.000	3.368	2.625	2.415	0.015	0.020	0.050	13.313	11.000	68.797	350	10.294	17*2	93.0	170-200	65-73
SAPHIR	MTR		2.996	2.968		2.469				24.61	23.61	34.39	280.8+2%		23	90.0	155	71/57
													280.8+2%			93.0	155	71/64
													320.0+2%			45.0	180	70/64

Lf= Length of Fuel Plate
La= Active Fuel Length
Le= Length of Element

Table 1.2. Dimensions and Nuclear Data for Typical TRIGA Fuel Assemblies

TRIGA Case	Fuel Element	Cladding	Zirconium Rod	U-238 Mass (g)	U-235 Mass (g)	Uranium Weight %	Enrichment (%)	Zirconium Mass (g)	Element Length (in)	Fuel Length (in)	Fuel OD (in)	Cladding Thickness (in)	H/Zr in the Fuel
I		SS	Yes		<137	8.5	20		28.5	15	1.435	0.020	1.6
II		SS	Yes		<137	8.5	20		28.5	15	1.371	0.020	1.6
III		SS	Yes		<137	8.5	70		28.5	15	1.435	0.020	1.6
IV		SS	Yes		<137	8.5	70		28.5	15	1.371	0.020	1.6
V		**SS**	**Yes**	**13.08**	**174.1**	**8.5**	**93**	**1981**	**28.5**	**15**	**1.435**	**0.020**	**1.6**
VI		Al	No		<174.1	8.5	93		30.0	15	1.415	0.030	1.6
VII		SS	Yes		<137	12.0	20		28.5	15	1.435	0.020	1.6
VIII		**Incoloy**	**No**	**3.10**	**41.16**	**10.0**	**93**	**391**	**30.0**	**22**	**0.510**	**0.016**	**1.6**
IX		SS	Yes		<137	20.0	20		28.5	15	1.435	0.020	1.6
X		SS	Yes		<137	30.0	20		28.5	15	1.435	0.020	1.6
XI		Incoloy	No		<137	30.0	20		30.0	22	0.510	0.016	1.6
XII		Incoloy	No		<137	45.0	20		30.0	22	0.510	0.016	1.6
XIII	14"	Al	No	144	36	8.0	20	2070					1.0
XIV	15"		No	144	36	8.0	20	2070					1.0
XV	Std. (prior 11/64)	SS	Yes	156	39	8.0	20	2088					1.0
XVI	Std. (after 11/64)		Yes	156	39	8.5	20	2088					1.7
XVII	**FLIP**	**SS**	**Yes**	**59**	**137**	**8.5**	**70**	**2070**	**28.5**	**15**	**1.435**	**0.02**	**1.6**
XVIII	FLIP-LEU-I		Yes	403	101	20.0	20	1988					1.6
XIX	FLIP-LEU-II		Yes	659	165	30.0	20	1886					1.6
XX	ACPR		Yes	215	54	12.0	20	1962					1.7
XXI		Incoloy 800	No	219	55	45.0	20	327					1.6
XXII	Fuel Follower Control Rod		Yes	150	38	8.5	20	2004					1.6
XXIII	FLIP-LEU-I		Yes	387	97	8.5	20	1908					1.6

FLIP = Fuel Life Improvement Program

LEU = Low Enriched Uranium

ACPR = Annular Core Pulsed Reactor

1.3 REFERENCES

[1.1] Model 2000 Radioactive Material Transport Package Safety Analysis Report, NEDO-31581, April, 1988.

[1.2] Model 2000 Radioactive Material Transport Package 2000 Watts Decay Heat Upgrade Safety Analysis Report, NEDO-32318, July, 1994.

[1.3] Code of Federal Regulations, Title 10, Part 71, 1992.

[1.4] General Electric Quality Assurance Program for Shipping Packages for Radioactive Material, QAP-1, Revision 5, 1990.

1.4 APPENDIX

1.4.1 Drawings

105E9557 Fuel Divider Certification Drawing

105E9560 TSR Fuel Basket Certification Drawing

FIGURE WITHHELD UNDER 10 CFR 2.390

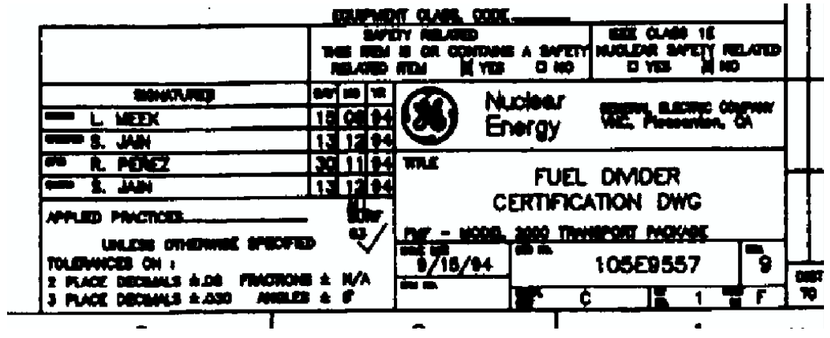

FIGURE WITHHELD UNDER 10 CFR 2.390

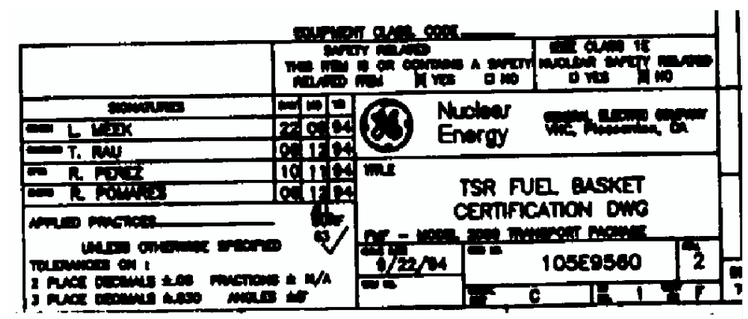

2. STRUCTURAL EVALUATION

This chapter presents the structural evaluation of the Model 2000 Cask MTR-type fuel divider and its conformance with all applicable structural criteria. Normal and hypothetical accident condition evaluations are performed in accordance with 10CFR71 [2.1] requirements and IAEA Safety Standards requirements [2.12]. The structural evaluation of the special configuration of the Tower Shielding Reactor (TSR) fuel basket is included in Appendix 2.11.1.

The results of the engineering evaluations are presented to demonstrate that the MTR-type fuel divider and the TSR fuel basket remain functional under normal transport and hypothetical accident conditions, and as such, maintain the configuration of the contained MTR-type fuel elements, TRIGA fuel elements, or TSR fuel core segments to assure criticality and shielding safety.

The engineering evaluation consists of static, linear elastic finite element analyses of the MTR-type fuel divider design for each of the applicable loading conditions. The results of these analyses are compared against the allowable stress limit criteria specified by Regulatory Guide 7.6 [2.2]. The LIBRA Finite Element Computer Code is used in this evaluation.

LIBRA is a multi-purpose finite element computer code applicable to both static and dynamic analyses of linear and nonlinear structural systems. In addition, there is a companion heat transfer program for the analysis of both steady-state and transient thermal distributions in structural systems. A series of exact solution type of problems and benchmark testing in the thermal and structural areas verify the accuracy of the analyses [2.3].

The structural evaluation of the cask itself has been performed in Reference [2.3] for a decay heat of 600W, and in Reference [2.4] for a decay heat of 2000W. Since this analysis is performed for a decay heat of 1500W, it is assumed that Reference [2.4] is bounding with regards to the cask, and therefore this structural evaluation only considers the MTR-type divider. Appendix 2.11.2 includes a summary of the results from Reference [2.4].

2.1 STRUCTURAL DESIGN

2.1.1 Discussion

The MTR-type fuel divider consists of five thick forgings, each having 21 rectangular holes to subdivide the fuel elements and 24 slots for the inclusion of a neutron absorbing material. The detailed design of the MTR-type fuel divider is shown in the drawing included in Subsection 1.3.2. Each of the 21 locations may store several fuel elements, depending on the particular geometry and ^{235}U content of the fuel. The total weight of the MTR-type fuel divider and fuel assembly is 5356 lbs, which is less than the allowable payload weight of 5450 lbs for the Model 2000 Package. The total weight of the MTR-type fuel divider when loaded with TRIGA fuel assemblies will not be allowed to exceed 5450 lbs.

The MTR-type fuel divider is designed to maintain separation of the fuel elements during all normal and accident conditions and to enhance the shielding characteristics of the Package.

2.1.1.1 General Description of the Finite Element Model

A three dimensional finite element model of the MTR-type fuel divider is developed and used for the analysis. The MTR-type fuel divider model employs LIBRA type STIF10 and STIF10N eight-node 3-D solid brick elements which use 2x2x2 Gaussian integration. Type STIF10 elements are used for the thermal stress models, and type STIF10N elements are used for all other structural models. The primary difference between the two elements types is that type STIF10N elements include a non-conforming mode to more accurately simulate bending. This element type is not formulated to be used in thermal stress analyses.

Figure 2.1 illustrates a typical element configuration including the 8 Gaussian integration points. Points i through p represent the location of the nodes at the corners, and points 1 through 8 represent the location of the Gaussian points.

The LIBRA output provides values for $\sigma 1$, $\sigma 2$, $\sigma 3$, and τ for each of the Gaussian points. To determine the membrane stress (P_m), the maximum principal stress values for each of the 6 planes are obtained. For each of the three sets of parallel planes, the maximum principal stresses are averaged. The membrane stress is then defined as the maximum averaged principal stress of the 3 sets of parallel planes.

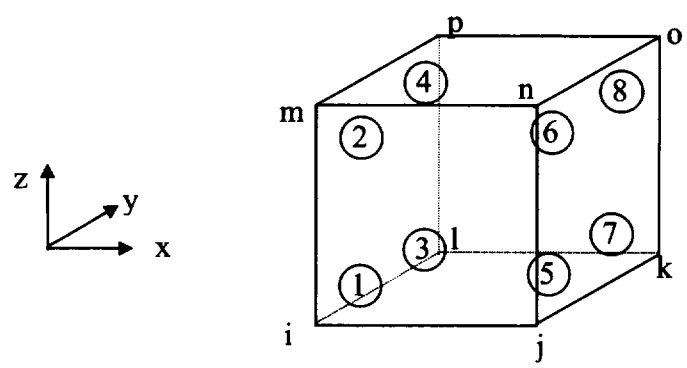

Figure 2.1. STIF10N Element Configuration

The bending stress (P_b) is defined by comparing the maximum principal stress value of each plane with the minimum principal stress value of the opposite parallel plane. This comparison is done twice for each set of parallel planes, reversing the maximum and minimum locations. The bending stress is then defined as one half the maximum difference obtained from any of the three sets of parallel planes.

Since the membrane and bending stresses previously described are evaluated at the Gaussian points, a scaling factor of 1.5 is used to extrapolate the values to the surface of the elements.

The finite element model of the MTR-type fuel divider, shown in Figure 2.2, has a total of 1298 nodes and 700 elements. Since the model geometry and applied loadings are symmetric, it was only necessary to generate a 180° section of the model. A total of ten element layers make up the complete 52 in. height, with the cross-section of each layer having 70 elements as shown in Figure 2.3. The complete model is utilized in all structural analyses involving horizontal and vertical acceleration.

A detailed description of the loading and boundary conditions used is further discussed in the sections (Sections 2.6 and 2.7) describing each loading condition analyzed. For dimensions and various interfaces discussed in this section, refer to the GE Certification Drawing, "MTR-type fuel divider", 105E9557.

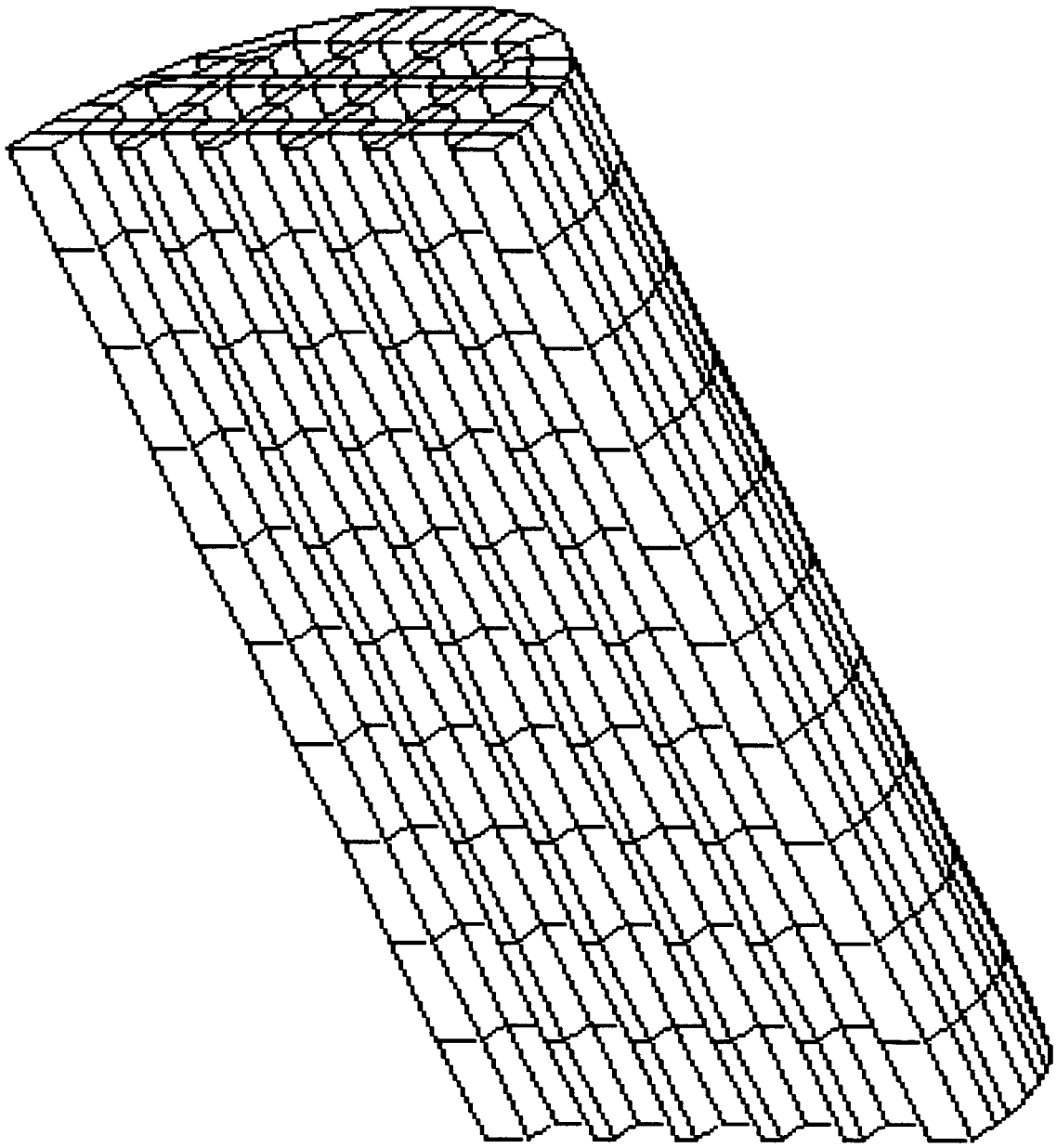

Note: Figure inclined for clarity.

Number of Elements: 700 Number of Nodes: 1,298

Figure 2.2. LIBRA Finite Element Model of MTR-Type Fuel Divider

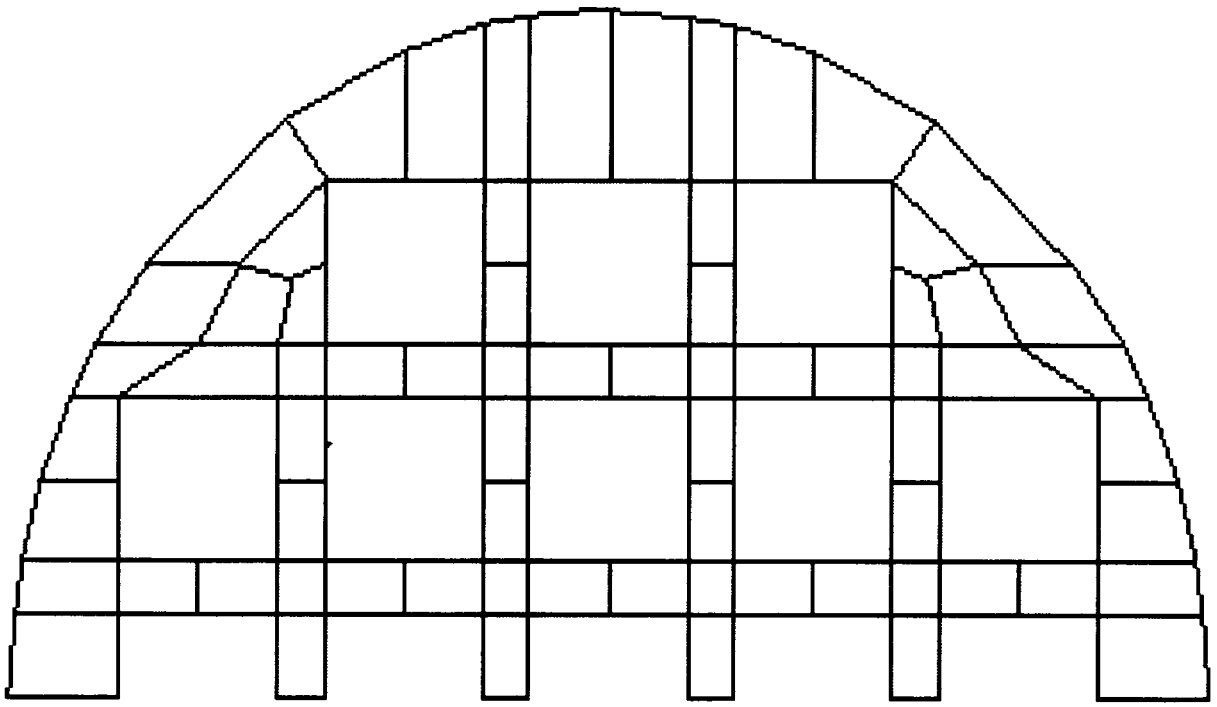

Figure 2.3. Finite Element Model Cross-Section for MTR-Type Fuel Divider

2.1.2 Design Criteria

2.1.2.1 Allowable Stresses

This section defines the allowable limits for primary membrane (Pm), primary bending (Pb), secondary (Q), bearing, and shear stresses and the required factor of safety against instability (i.e. buckling) for all components in the MTR-type fuel divider. The divider is designed in accordance with the Regulatory Guide 7.6 [2.2] and Subsection NG[2.5]. Table 2.1 summarizes the allowable criteria used in this analysis.

2.1.2.2 Load Combinations

The load combinations used in the MTR-type fuel divider analysis are developed in accordance with Regulatory Guide 7.8 [2.6] for the applicable divider loads. The resulting load combinations are shown in Table 2.2.

2.1.2.3 Miscellaneous Structural Criteria

2.1.2.3.1 Brittle Fracture

All structural components of the MTR-type fuel divider are fabricated from austenitic stainless steels Type 304. Since these materials do not undergo a ductile to brittle transition in the temperature range of interest (down to -40°F), they are not subject to brittle fracture on this application.

2.1.2.3.2 Fatigue

A fatigue analysis of the divider assembly is required to evaluate the effects of cyclic loads. The fatigue analysis is performed in accordance with the requirements of Regulatory Guide 7.6 [2.2]. All significant cyclic loads, including thermal cycling and vibration, are evaluated to determine the cumulative usage factor.

Table 2.1. Allowable Stress Limit Criteria [2.2]

Stress Condition	Allowable Stress
Normal Condition	
Pm	Sm
Pm+Pb	1.5 Sm
Pm+Pb+Q	3 Sm
Bearing Stress	Sy
Pure Shear	0.6 Sm
Fatigue, S_{alt}	Sa @ Life Cycles (1)
Accident Condition	
Pm	Lesser of 2.4 Sm and 0.7 Su
Pm+Pb	Lesser of 3.6 Sm and Su
Pm+Pb+Q	Need not be evaluated
Bearing Stress	Need not be evaluated
Pure Shear	0.42 Su
Buckling	<0.67 PCR (2)
Sum of All Peak Stress Components	<Sa at 10 Cycle (3)

Notes: (1) Sa obtained from fatigue curves Figure I-9.2.2, Appendix I [2.7]
(2) PCR represents the elastic collapse-load
(3) Sa obtained from fatigue curve Figure I-9.2.1, Appendix I [2.7]

Table 2.2. Load Combination Definitions

Load Combination (1) Number	Load Definition [2.3]
1. One Foot Drop + Normal Thermal	Top/Btm 69 g's; Side 69 g's
2. Thirty Foot Drop	Top/Btm 133 g's; Side 133 g's CG/corner 63 g's
3. Accident Thermal(2)	
4. Vibration and Shock + Normal Thermal(3)	10 g's Vert. and 5 g's Lateral

Notes: (1) All other load combinations specified by Regulatory Guide 7.8 [2.6] are not applicable for the MTR-type fuel divider.
(2) Evaluation of the accident thermal (fire accident) case is performed to demonstrate it has no adverse effect on the MTR-type fuel divider.
(3) Evaluated for fatigue.

2.2 COMPONENT WEIGHTS

The total weight of the MTR-type fuel divider and fuel is 5356 lbs. A summary of the MTR-type fuel divider component weights is provided in Table 2.3. The total weight of the MTR-type fuel divider when loaded with TRIGA type fuel assemblies will not exceed 5450 lbs, the maximum allowable payload weight of the Model 2000 package. The maximum weight of the TRIGA fuel assemblies including shoring devices will not exceed 42.8 lbs per divider position.

2.3 MECHANICAL PROPERTIES OF MATERIALS

The MTR-type fuel divider is fabricated from austenitic stainless steels Type 304 (ASME SA-182). Type 304 stainless steel is an ASME Code approved material with high corrosion resistance. The density of this stainless steel used in the analysis is 0.285 lb/in^3 [2.7]. A listing of the material properties used in the analysis is included in Table 2.4.

2.4 GENERAL STANDARDS FOR ALL PACKAGES

The existing Model 2000 Package SAR [2.3] provides justification that the general standards for the packaging are met. Additional information specifically applicable to the MTR-type fuel divider is provided in the following sections.

2.4.1 Minimum Package Size

The MTR-type fuel divider has no effect on package size.

Table 2.3. MTR-Type Fuel Divider Weight

Component	Maximum Weight (lbs)
MTR-type fuel divider	4,255
Max weight per fuel location (2)	42.8
24 Borated Aluminum plates	102
Misc. hardware	100

Notes: (1) Component weights are calculated based on the dimensions shown on the drawings in Subsection 1.4.1 and the material densities discussed in Section 2.3.
(2) This weight reflects that of the fuel, spacers, and any other hardware required for each fuel location. The total fuel and hardware load for all 21 locations = 899 lbs.

Table 2.4. Mechanical Properties of Materials

Steel Material Spec.	Type or Grade	Stress (ksi)				Young's Modulus (10^6 psi)	Coef of Thermal Expansion (10^{-6} in/in°F)
		Temp °F	Yield Sy	Ultimate Su	Elastic Allowable Sm		
		-100	—	—	—	29.1	—
		70	—	—	—	28.3	—
		100	30.0	70.0	20.0	—	8.55
SA 182	304	200	25.0	66.2	20.0	27.6	8.79
		300	22.5	61.5	20.0	27.0	9.00
		400	20.7	60.0	18.7	26.5	9.19
		500	19.4	59.3	17.5	25.8	9.37
		600	18.2	59.3	16.4	25.3	9.53

Notes: (1) Reference [2.7], Tables, I-1.2, I-2.2, I-3.2, I-5.0 and I-6.0

2.4.2 Tamperproof Feature

Since the MTR-type fuel divider is contained within the cask body, it does not affect the tamperproof features of the packaging.

2.4.3 Positive Closure

Since the MTR-type fuel divider is contained within the cask body, it does not affect the positive closure of the packaging.

2.4.4 Chemical and Galvanic Reactions

The cask cavity surfaces and the fuel divider are constructed of stainless steel. These materials do not react in steam or water either chemically or galvanically. The fuel is designed to be chemically non reactive in water filled systems. In addition, the cask cavity is vacuum dried to eliminate moisture from the wet loading operation and made inert with He gas.

2.5 LIFTING AND TIE-DOWN STANDARDS FOR ALL PACKAGES

The payload weight of the MTR-type fuel divider is below the maximum payload weight of 5450 lbs. specified by the Model 2000 Package SAR [2.3]. The existing cask lifting devices and tie downs are not affected by the MTR-type fuel divider and are therefore not addressed herein.

2.6 NORMAL CONDITIONS OF TRANSPORT

The MTR-type fuel divider, when subjected to the normal conditions of transport as specified in 10CFR71.71, meets the performance requirements specified in Subpart E of 10CFR71 [2.1]. This is demonstrated in the following sections where each normal condition is addressed and shown to meet the applicable design criteria.

2.6.1 Heat

The thermal evaluation for the normal and off-normal events is performed in Chapter 3.0. The structural evaluation of the resulting thermal distributions is presented later in this section.

2.6.1.1 Summary of Pressures and Temperatures

The divider assembly is not a pressure boundary. Therefore, pressure loads need not be addressed in the structural analysis. The controlling design temperatures for normal conditions of transport and 1500 Watts of decay heat used in the structural analysis are listed in Table 2.5.

Table 2.5. Maximum Normal Condition Temperatures for MTR-Type Fuel Divider

Package Component	Max Temp (°F)	Design Temperature Criteria
MTR-type fuel divider Fuel Element Surface (helium)	340	<400
MTR-type fuel divider Fuel Element Surface (air)	380	<400
Cask Cavity	304	<600
Lead Shield	302	<600
Cask Seal Area	285	<400
Overpack Accessible Outer Surface	130(1)	<180

Notes: (1) For 100°F ambient temperature with maximum decay heat and no solar load.

2.6.1.2 Differential Thermal Expansion

The effects of thermal gradients on the MTR-type fuel divider are investigated by finite element analysis. For normal conditions of transport the maximum stress occurs at the region in which the fuel is nearest to the outer surface of the divider. This is attributed to the sharp temperature gradient across the relatively thin section of material. The divider is free to move axially upward under normal conditions of transport.

Under the normal conditions of transport, the temperature difference between the divider and the cask cavity under steady state condition is calculated to be 32°F. Differential thermal axial expansion of the divider with respect to the cask cavity is estimated to be approximately 0.1 inches, which is significantly less than the actual gap of 2.0 inches between the divider and the cask cavity. The differential thermal expansion does not change significantly with the assumption of an air-filled cask cavity.

2.6.1.3 Stress Calculation

The analysis results from the MTR-type fuel divider thermal evaluation, presented in Section 3.0, show that the temperature of the cask cavity increases from the 70°F ambient temperature to 304°F for normal operating conditions. Figure 2.4 shows the maximum stress locations. The value in parentheses next to the element number in Figure 2.4 indicates the elevation of the element layer. Thermal stress intensity for all normal conditions are provided in Table 2.6. This analysis is valid for both a helium-filled cask cavity and an air-filled cask cavity.

2.6.1.4 Comparison With Allowable Stresses

Load combinations and comparisons with allowable stress limits are presented in Paragraph 2.6.7.4. In that paragraph, the resulting stresses from all normal conditions of transport are combined and compared against the criteria provided in Subsection 2.1.2.

2.6.2 Cold

For the cold condition, a -40°F steady state ambient temperature is specified in Reference [2.6]. This temperature in conjunction with no fuel heat load in the cask will result in a minimum temperature throughout the cask of -40°F. The materials of construction for the MTR-type fuel divider are not adversely affected by the -40°F condition.

2.6.3 Reduced External Pressure

The divider assembly is not a pressure boundary and the effects of external pressure on the cask body have no effect on the MTR-type fuel divider.

2.6.4 Increased External Pressure

The divider assembly is not a pressure boundary and the effects of external pressure on the cask body have no effect on the MTR-type fuel divider.

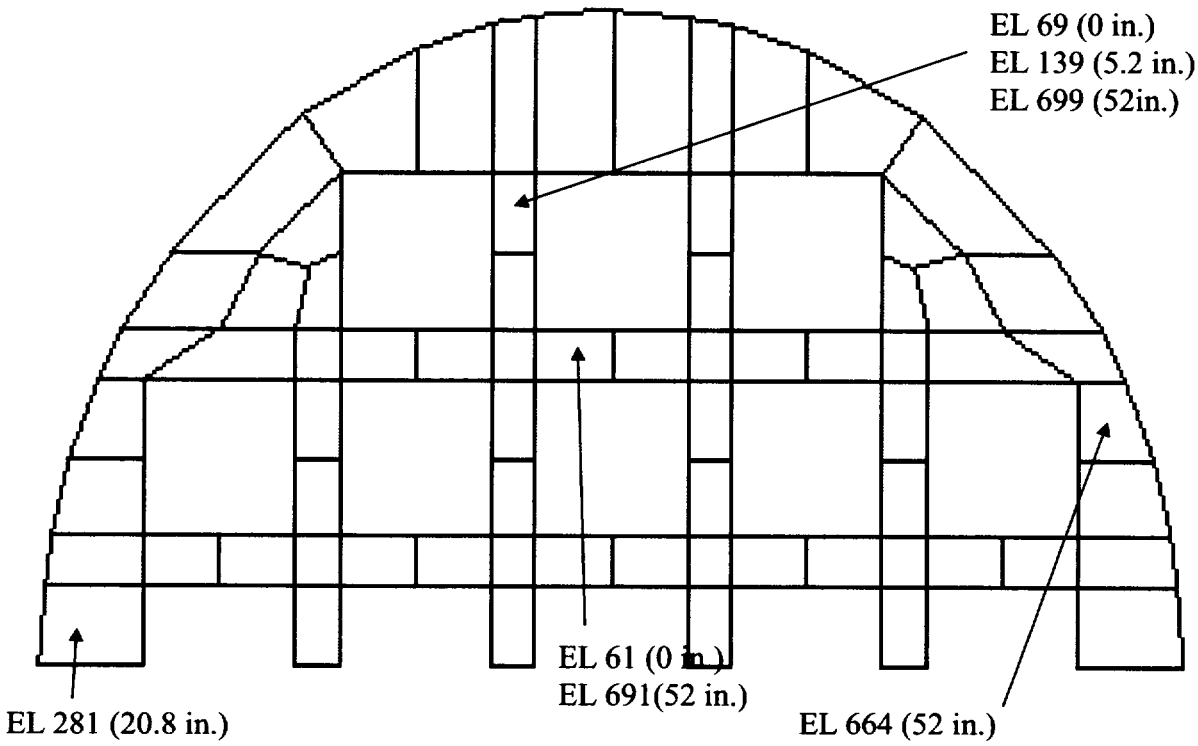

Figure 2.4. Maximum Stress Element Locations for MTR-Type Fuel Divider

Table 2.6. Maximum Thermal Stress Intensity, Normal Condition for MTR-Type Fuel Divider

Condition	S (ksi)	Location
Cold, -40°F	0.00	All
-20°F	3.58	EL 664
100°F Ambient, decay heat, and solar	3.26	EL 139

2.6.5 Vibration

The stresses induced by vibration normally incident to handling and transportation of the package are considered to be negligible. The divider loads resulting from the normal vibration accelerations will conservatively be less than 10 g's vertical and 5 g's lateral that are selected as loading condition. When compared to the stresses resulting from the normal condition one foot drop loads (Subsection 2.6.7), the stresses due to a 10 g/5 g combined vibration load will be enveloped by those due to the drop condition. The resulting stress intensity values resulting from this analysis are presented in Tables 2.7 and 2.8 for the -20°F and the normal thermal conditions, respectively. Vibration fatigue is addressed in Paragraph 2.6.5.1.

2.6.5.1 Vibration Fatigue

The analysis is performed using a symmetric three-dimensional structure with independent horizontal and vertical loading conditions. The effect of each acceleration response is separately analyzed, and the resulting stresses are combined by the square root of the sum of the square (SRSS) procedure to obtain the net effect on the divider. The evaluation is performed for the vibration loads, and for the cumulative effects of vibration and thermal loads for the expected life of the divider.

Stress concentration factors are used at applicable locations shown in Figure 2.5. This is done to account for the inclusion of the slots for the borated aluminum neutron absorbing material. It is noted however, that elements 69, 139, and 699 shown in Figure 2.5 do not contain a slot, but were found to yield limiting stress values for the web region between the fuel holes. Regardless, the stress concentration factor was applied at these elements to provide conservative results. A stress concentration factor of 8.0 is used on the basis of the analysis presented in Appendix 2.11.3. The results shown in Tables 2.7 and 2.8 have these concentration factors included.

The divider fatigue usage factor is calculated to be +0.01 after rounding off. The calculation assumed 100 sets of 12 round trips, with 10 hours duration each way between inspection periods. The calculation of the fatigue usage factor is presented in Appendix 2.11.4. Section 8.0 provides inspection requirements and their schedules. It also uses the first mode of vibration equal to 287 Hz. The method used here is conservative given the unrealistic 287 cycles per second to calculate the number of stress cycles and the unrealistic applied transportation loads of 10 g's vertical and 5 g's lateral. Based on these results, fatigue is not a concern in this design.

2.6.6 Water Spray

The MTR-type fuel divider need not be subject to the water spray test. This is based on the fact that the material properties of the divider are not affected by contact with water.

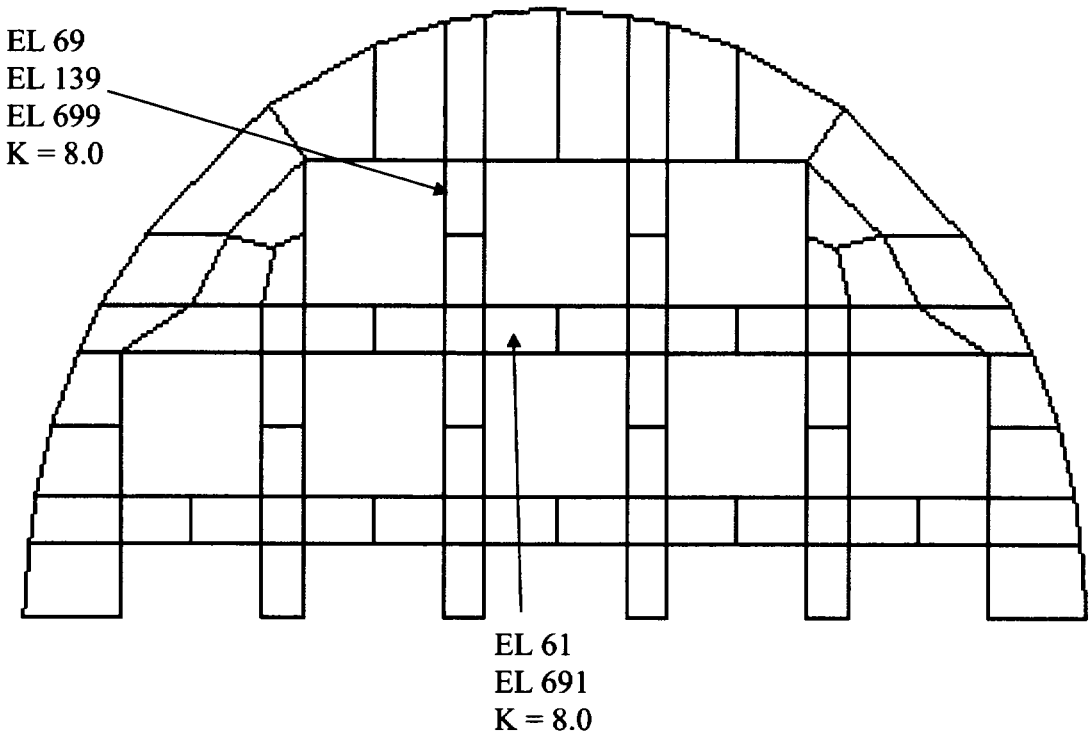

Figure 2.5. Location of Applied Stress Concentration Factors for MTR-Type Fuel Divider

Table 2.7. Vibration Analysis at -20°F for MTR-Type Fuel Divider

NORMAL CONDITION
(-20 degrees Fahrenheit)

STRESS COMPONENTS	Pm	Pm+Pb	Pm+Pb+Q	Shear
ALLOWABLE CRITERIA	Sm	1.5Sm	3Sm	.6Sm
ALLOWABLE VALUES (KSI)	18.7	28.05	56.1	11.22

LOADING CONDITION	MAX STRESS LOCATION	Component Pm	Allowable Sm	Component Pm+Pb	Allowable 1.5Sm	Component Pm+Pb+Q	Allowable 3Sm
VIBRATION	**Upper Layer**						
	664	0.077	18.7	0.122	28.05	3.702	56.1
	691	0.225	18.7	0.654	28.05	1.120	56.1
	699	0.497	18.7	0.827	28.05	3.847	56.1
	Middle Layer						
	281	0.303	18.7	0.719	28.05	2.155	56.1
	Bottom Layer						
	61	0.472	18.7	1.638	28.05	2.956	56.1
	69	0.653	18.7	1.708	28.05	3.728	56.1
	139	0.662	18.7	1.632	28.05	4.852	56.1

Note: All allowables conservatively taken at 400 F.

Table 2.8. Vibration Analysis at 100°F for MTR-Type Fuel Divider

NORMAL CONDITION
(100 degrees Fahrenheit)

STRESS COMPONENTS	Pm	Pm+Pb	Pm+Pb+Q	Shear
ALLOWABLE CRITERIA	Sm	1.5Sm	3Sm	.6Sm
ALLOWABLE VALUES (KSI)	18.7	28.05	56.1	11.22

LOADING CONDITION	MAX STRESS LOCATION	Component Pm	Allowable Sm	Component Pm+Pb	Allowable 1.5Sm	Component Pm+Pb+Q	Allowable 3Sm
VIBRATION	**Upper Layer**						
	664	0.077	18.7	0.122	28.05	3.362	56.1
	691	0.225	18.7	0.654	28.05	1.088	56.1
	699	0.497	18.7	0.827	28.05	3.627	56.1
	Middle Layer						
	281	0.303	18.7	0.719	28.05	2.071	56.1
	Bottom Layer						
	61	0.472	18.7	1.638	28.05	2.954	56.1
	69	0.653	18.7	1.708	28.05	3.748	56.1
	139	0.662	18.7	1.632	28.05	4.892	56.1

Note: All allowables conservatively taken at 400 F.

2.6.7 Free Drop

The regulations [2.1] include a one-foot drop as part of the normal conditions of transport. The Model 2000 Package is transported vertically, an analysis of the divider for postulated one foot drop is performed for the head on, bottom on, and side orientations to satisfy the intent of the regulations.

The one foot vertical and side drop load definition is taken from Reference [2.3], page 2-70, Paragraph 1, which states, "The g force produced by the one foot drop for each drop configuration for a toroid with a wall thickness of 0.76 inches are: Head On 69 g's; Side 20 g's; Cg-over-corner 14 g's ... ." However, the load used in the analysis for the side orientation was that of the head on. Consistent with the currently approved design basis for the package, this load definition represents an enveloping design basis for the MTR-type fuel divider.

2.6.7.1 One Foot Head On Drop

A finite element analysis is used for the divider one foot head on drop evaluation. The loads, reactions and constraining conditions considered in the divider one foot head on drop analysis are illustrated in Figure 2.6.

The force loading on the model is from the body forces of the divider. The fuel elements do not impose any load on the divider for this drop configuration since they are free to move axially relative to the divider. The top and bottom of the cask limit the axial motion of the fuel elements. A body force of 69 g is applied throughout the model in the positive z-direction, as is shown in Figure 2.6.

The divider upper surface is constrained in the vertical direction. One nodal point (node 2001) is fixed in the lateral x-direction to prevent rigid body motion. The symmetry surface is constrained in the lateral y-direction. There are no other boundary conditions applied to the model. The stress intensity values resulting from this analysis are presented in Tables 2.9 and 2.10 for the -20°F and 100°F thermal conditions, respectively.

2.6.7.2 One Foot Bottom On Drop

The bottom on drop analysis is performed using a model similar to that used in the head on drop analysis. The loads, reactions and constraining conditions considered in the divider one foot bottom on drop analysis are illustrated in Figure 2.7.

The force loading on the model is from the body forces of the divider. The fuel elements do not impose any load on the divider for this drop configuration since they are free to move axially relative to the divider. The top and bottom of the cask limit the axial motion of the fuel elements. A body force of 69 g is applied throughout the model in the negative z-direction, as is shown in Figure 2.7.

The divider lower surface is constrained in the vertical direction. One nodal point (node 1) is fixed in the lateral x-direction to prevent rigid body motion. The symmetry surface is constrained in the lateral y-direction. There are no other boundary conditions applied to the model. The stress intensity values resulting from this analysis are presented in Tables 2.9 and 2.10 for the -20°F and 100°F thermal conditions, respectively.

2.6.7.3 One Foot Side Drop

The same model used in the top and bottom on drop analyses was used in this analysis, with the inclusion of slightly more complex loading and boundary conditions. Loading and constraint conditions applied in this analysis are shown in Figure 2.8.

The force loading comes from the weight of the fuel and the body forces of the divider. The weight of the fuel element, 42.8 lbs x 69 g, is applied as distributed forces along the interior surface in the lateral negative x-direction of the 21 fuel holes. A 69 g body force is applied in the lateral negative x-direction throughout the model. It is noted that the load is applied in the lateral direction parallel to the symmetry plane to correctly simulate the non-symmetric loading.

For the side drop loading condition, the lateral movement of the divider is restricted by the wall of the cask. Since the divider is of smaller diameter than the interior of the cask, the lateral support of the cask wall against the divider will act upon a line. Figure 2.8 shows the lateral x-direction constraint along the edge of the cask. The symmetry surface is modeled by constraint of all nodes along this surface in the lateral y-direction.

The locations of the maximum stresses are identified in the three-dimensional structure. For each element to be listed in the tables, only the maximum stresses are extracted, and the resulting stress intensities are provided in Tables 2.13 and 2.14 for the -20°F and the 100°F thermal conditions, respectively.

2.6.7.4 Summary of Results

The normal drop condition maximum stresses are summarized in Table 2.15. As can be seen, all stresses are well within allowable limits. Therefore, the integrity of the MTR-type fuel divider is maintained and remains fully functional for all normal drop conditions.

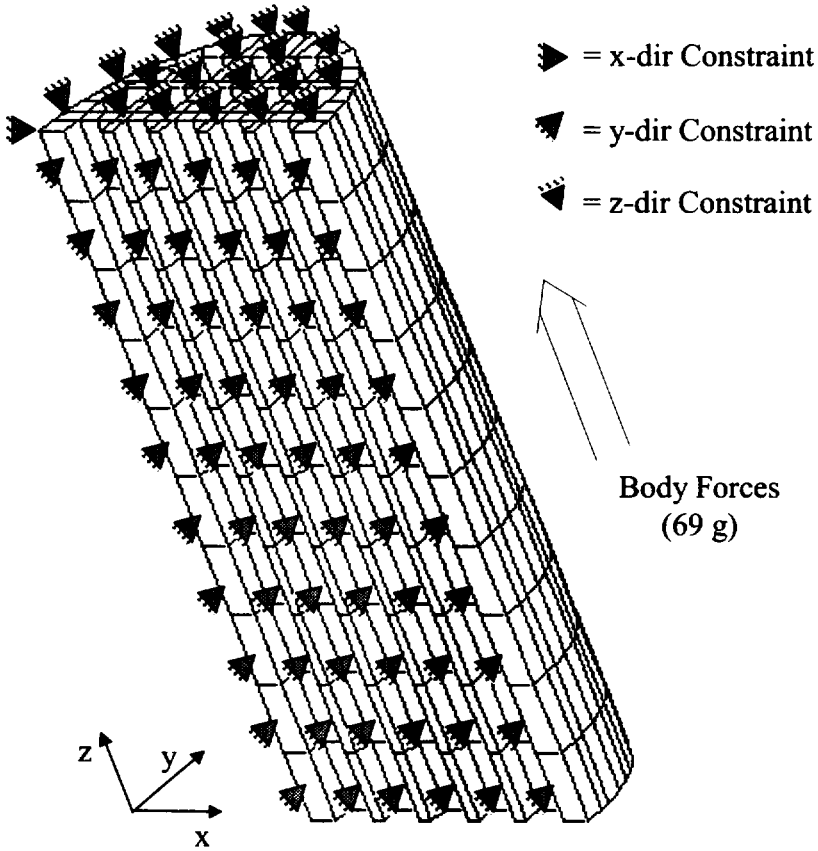

Figure 2.6. Normal Condition Head On Drop for MTR-Type Fuel Divider

Table 2.9. Normal Condition Head on Drop at -20°F for MTR-Type Fuel Divider

NORMAL CONDITION
(-20 degrees Fahrenheit)

STRESS COMPONENTS	Pm	Pm+Pb	Pm+Pb+Q	Shear
ALLOWABLE CRITERIA	Sm	1.5Sm	3Sm	.6Sm
ALLOWABLE VALUES (KSI)	18.7	28.05	56.1	11.22

LOADING CONDITION	MAX STRESS LOCATION	Component Pm	Allowable Sm	Component Pm+Pb	Allowable 1.5Sm	Component Pm+Pb+Q	Allowable 3Sm
HEAD ON DROP	**Upper Layer**						
	664	0.362	18.7	1.210	28.05	4.790	56.1
	691	2.870	18.7	10.361	28.05	10.827	56.1
	699	2.931	18.7	9.864	28.05	12.884	56.1
	Middle Layer						
	281	0.196	18.7	0.614	28.05	2.050	56.1
	Bottom Layer						
	61	0.188	18.7	0.596	28.05	1.914	56.1
	69	0.276	18.7	0.767	28.05	2.787	56.1
	139	0.646	18.7	1.904	28.05	5.124	56.1

Note: All allowables conservatively taken at 400 F.

Table 2.10. Normal Condition Head on Drop at 100°F for MTR-Type Fuel Divider

NORMAL CONDITION
(100 degrees Fahrenheit)

STRESS COMPONENTS	Pm	Pm+Pb	Pm+Pb+Q	Shear
ALLOWABLE CRITERIA	Sm	1.5Sm	3Sm	.6Sm
ALLOWABLE VALUES (KSI)	18.7	28.05	56.1	11.22

LOADING CONDITION	MAX STRESS LOCATION	Component Pm	Allowable Sm	Component Pm+Pb	Allowable 1.5Sm	Component Pm+Pb+Q	Allowable 3Sm
HEAD ON DROP	**Upper Layer**						
	664	0.362	18.7	1.210	28.05	4.450	56.1
	691	2.870	18.7	10.361	28.05	10.795	56.1
	699	2.931	18.7	9.864	28.05	12.664	56.1
	Middle Layer						
	281	0.196	18.7	0.614	28.05	1.966	56.1
	Bottom Layer						
	61	0.188	18.7	0.596	28.05	1.912	56.1
	69	0.276	18.7	0.767	28.05	2.807	56.1
	139	0.646	18.7	1.904	28.05	5.164	56.1

Note: All allowables conservatively taken at 400 F.

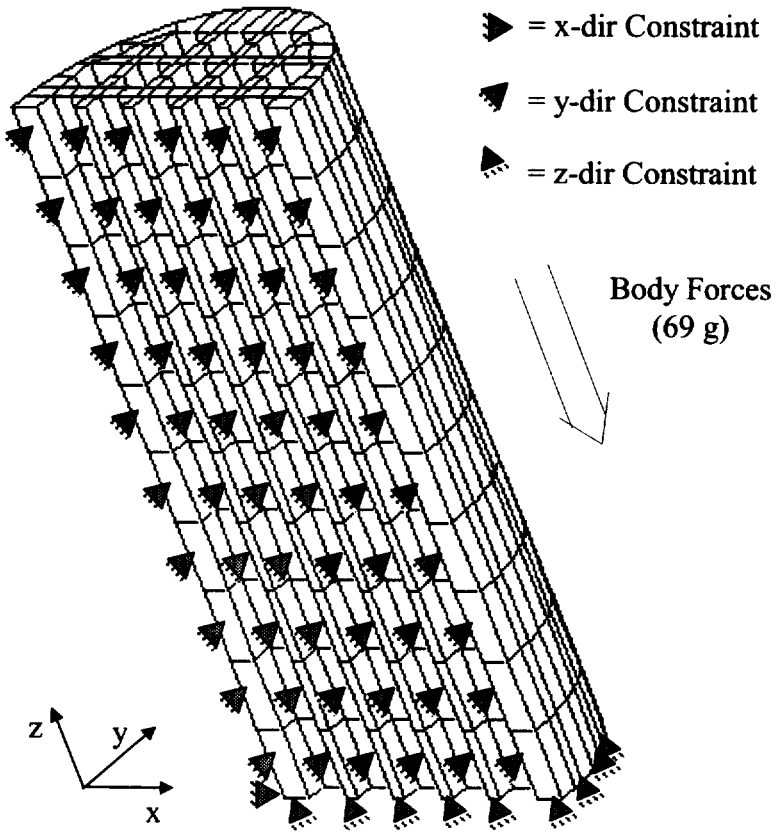

Figure 2.7. Normal Condition Bottom On Drop for MTR-Type Fuel Divider

Table 2.11. Normal Condition Bottom Drop at -20°F for MTR-Type Fuel Divider

NORMAL CONDITION
(-20 degrees Fahrenheit)

STRESS COMPONENTS	Pm	Pm+Pb	Pm+Pb+Q	Shear
ALLOWABLE CRITERIA	Sm	1.5Sm	3Sm	.6Sm
ALLOWABLE VALUES (KSI)	18.7	28.05	56.1	11.22

LOADING CONDITION	MAX STRESS LOCATION	Component Pm	Allowable Sm	Component Pm+Pb	Allowable 1.5Sm	Component Pm+Pb+Q	Allowable 3Sm
BOTTOM DROP	**Upper Layer**						
	664	0.034	18.7	0.096	28.05	3.676	56.1
	691	0.188	18.7	0.596	28.05	1.062	56.1
	699	0.276	18.7	0.767	28.05	3.787	56.1
	Middle Layer						
	281	0.234	18.7	0.742	28.05	2.178	56.1
	Bottom Layer						
	61	2.870	18.7	10.361	28.05	11.679	56.1
	69	2.931	18.7	9.864	28.05	11.884	56.1
	139	2.843	18.7	9.147	28.05	12.367	56.1

Note: All allowables conservatively taken at 400 F.

Table 2.12. Normal Condition Bottom Drop at 100°F for MTR-Type Fuel Divider

NORMAL CONDITION
(100 degrees Fahrenheit)

STRESS COMPONENTS	Pm	Pm+Pb	Pm+Pb+Q	Shear
ALLOWABLE CRITERIA	Sm	1.5Sm	3Sm	.6Sm
ALLOWABLE VALUES (KSI)	18.7	28.05	56.1	11.22

LOADING CONDITION	MAX STRESS LOCATION	Component Pm	Allowable Sm	Component Pm+Pb	Allowable 1.5Sm	Component Pm+Pb+Q	Allowable 3Sm
BOTTOM DROP	**Upper Layer**						
	664	0.034	18.7	0.096	28.05	3.336	56.1
	691	0.188	18.7	0.596	28.05	1.030	56.1
	699	0.276	18.7	0.767	28.05	3.567	56.1
	Middle Layer						
	281	0.234	18.7	0.742	28.05	2.094	56.1
	Bottom Layer						
	61	2.870	18.7	10.361	28.05	11.677	56.1
	69	2.931	18.7	9.864	28.05	11.904	56.1
	139	2.843	18.7	9.147	28.05	12.407	56.1

Note: All allowables conservatively taken at 400 F.

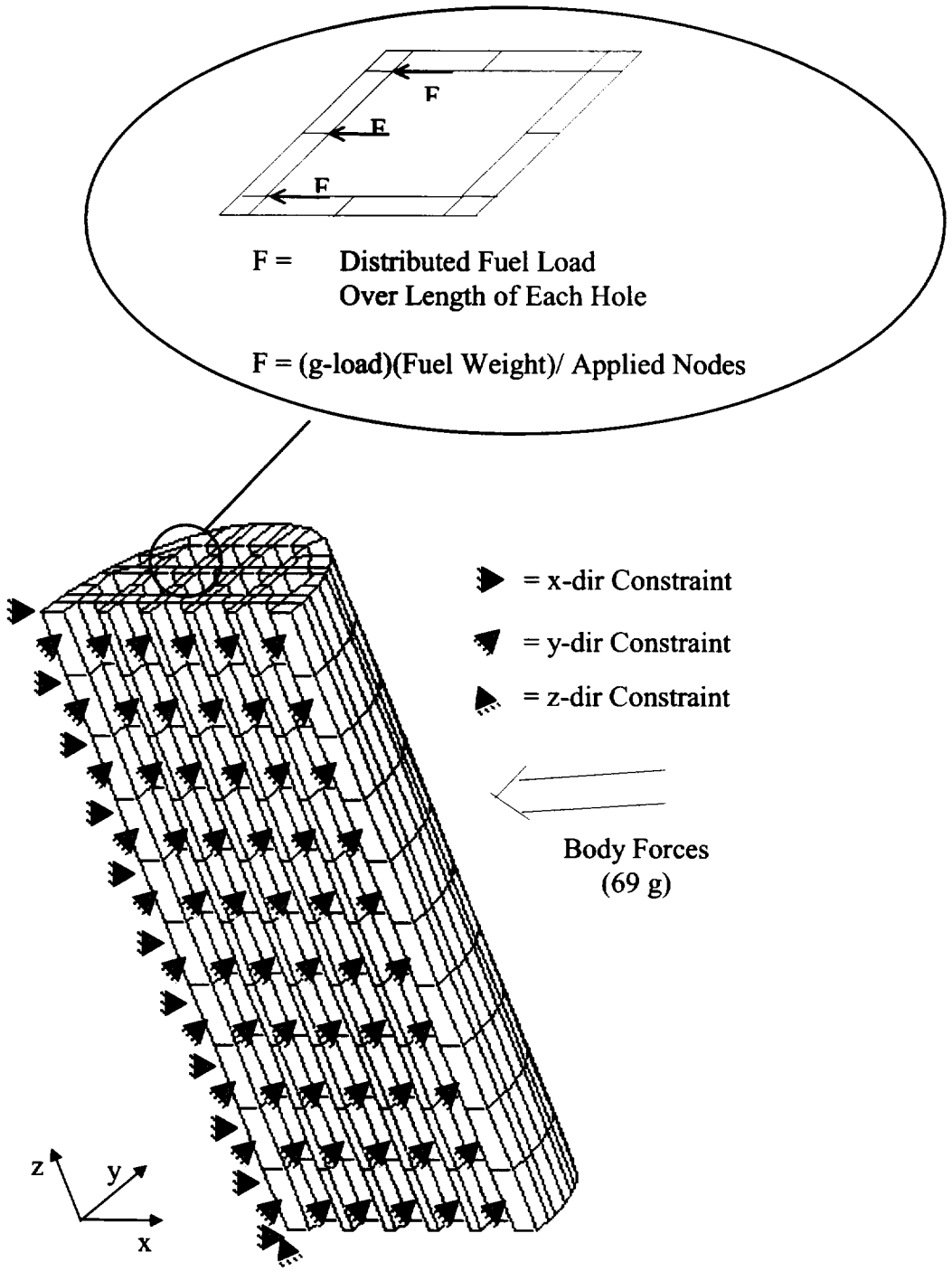

Figure 2.8. Normal Condition Side Drop for MTR-Type Fuel Divider

Table 2.13. Normal Condition Side Drop at -20°F for MTR-Type Fuel Divider

NORMAL CONDITION
(-20 degrees Fahrenheit)

STRESS COMPONENTS	Pm	Pm+Pb	Pm+Pb+Q	Shear
ALLOWABLE CRITERIA	Sm	1.5Sm	3Sm	.6Sm
ALLOWABLE VALUES (KSI)	18.7	28.05	56.1	11.22

LOADING CONDITION	MAX STRESS LOCATION	Component Pm	Allowable Sm	Component Pm+Pb	Allowable 1.5Sm	Component Pm+Pb+Q	Allowable 3Sm
SIDE DROP	**Upper Layer**						
	664	1.065	18.7	1.675	28.05	5.255	56.1
	691	3.080	18.7	8.948	28.05	9.414	56.1
	699	6.839	18.7	11.283	28.05	14.303	56.1
	Middle Layer						
	281	4.156	18.7	9.812	28.05	11.248	56.1
	Bottom Layer						
	61	3.080	18.7	8.948	28.05	10.266	56.1
	69	6.839	18.7	11.283	28.05	13.303	56.1
	139	7.159	18.7	11.636	28.05	14.856	56.1

Note: All allowables conservatively taken at 400 F.

Table 2.14. Normal Condition Side Drop at 100°F for MTR-Type Fuel Divider

NORMAL CONDITION
(100 degrees Fahrenheit)

STRESS COMPONENTS	Pm	Pm+Pb	Pm+Pb+Q	Shear
ALLOWABLE CRITERIA	Sm	1.5Sm	3Sm	.6Sm
ALLOWABLE VALUES (KSI)	18.7	28.05	56.1	11.22

LOADING CONDITION	MAX STRESS LOCATION	Component Pm	Allowable Sm	Component Pm+Pb	Allowable 1.5Sm	Component Pm+Pb+Q	Allowable 3Sm
SIDE DROP	**Upper Layer**						
	664	1.065	18.7	1.675	28.05	4.915	56.1
	691	3.080	18.7	8.948	28.05	9.382	56.1
	699	6.839	18.7	11.283	28.05	14.083	56.1
	Middle Layer						
	281	4.156	18.7	9.812	28.05	11.164	56.1
	Bottom Layer						
	61	3.080	18.7	8.948	28.05	10.264	56.1
	69	6.839	18.7	11.283	28.05	13.323	56.1
	139	7.159	18.7	11.636	28.05	14.896	56.1

Note: All allowables conservatively taken at 400 F.

Table 2.15. Summary of Results for Normal Conditions for MTR-Type Fuel Divider

LOADING CONDITIONS	High Stress Element	Element Location	Stress Type	Stress (ksi)	Allowable (ksi)	Margin of Safety
Normal Conditions						
1 foot head on drop (-20 degrees)	691	Upper Layer Fuel Divider	Pm + Pb	10.36	28.05	1.71
1 foot head on drop (100 degrees)	691	Upper Layer Fuel Divider	Pm + Pb	10.36	28.05	1.71
1 foot bottom drop (-20 degrees)	61	Lower Layer Fuel Divider	Pm + Pb	10.36	28.05	1.71
1 foot bottom drop (100 degrees)	61	Lower Layer Fuel Divider	Pm + Pb	10.36	28.05	1.71
1 foot side drop (-20 degrees)	139	Second Layer Fuel Divider	Pm + Pb	11.63	28.05	1.41
1 foot side drop (100 degrees)	139	Second Layer Fuel Divider	Pm + Pb	11.63	28.05	1.41
vibration analysis (-20 degrees)	139	Second Layer Fuel Divider	Pm+Pb+Q	4.85	56.10	10.56
vibration analysis (100 degrees)	139	Second Layer Fuel Divider	Pm+Pb+Q	4.89	56.10	10.47

2.6.8 Compression

The MTR-type fuel divider need not be evaluated for compression. This test does not apply to the Model 2000 Transport Package, since the package weight is in excess of 5,000 kg (11,000 lbs).

2.6.9 Penetration

This test does not apply to the MTR-type fuel divider. The puncture surface is the Model 2000 Package Overpack.

2.7 HYPOTHETICAL ACCIDENT CONDITIONS

The Model 2000 Package MTR-type fuel divider, when subjected to hypothetical accident conditions as specified in 10CFR71.73, meet the performance requirements specified in Subpart E of 10CFR71 [2.1] and IAEA Safety Standards [2.12]. This is demonstrated in the following sections where each accident condition is addressed and shown to meet the applicable design criteria.

2.7.1 Free Drop

Subpart F of 10CFR71 [2.1] requires that a 30 foot free drop be considered for the package, which includes the divider assembly. Consistent with the approved Model 2000 Safety Analysis Report [2.3], four different load orientations are considered for the divider assembly. Reference [2.3], page 2-102, provides the g-loading for the top/bottom, side, and cg-over corner as 133 g's, 133 g's, and 63 g's, respectively. The divider loads vary in the different orientations due to differences in the toroid energy absorption characteristics and in the interaction of the fuel elements with the divider. Oblique orientation drop is bounded by the evaluation of the horizontal and vertical drops, and is not addressed.

2.7.1.1 Head On Drop

The same finite element model used for the normal condition head on drop case is utilized in this analysis with the exception of the increased body force. The same constraining conditions are applied. Figure 2.9 shows the loading and constraint conditions applied to the model for this case.

The body force for the accident condition is increased to 133 g's [2.3]. The fuel elements do not impose any load on the divider for this drop configuration since they are free to move axially relative to the divider. The top and bottom of the cask limit the axial motion of the fuel elements. Table 2.16 presents the resulting stress intensities for this drop scenario.

2.7.1.2 Bottom Drop

The same finite element model used for the normal condition bottom on drop case is utilized in this analysis with the exception of the increased body force. The same constraining conditions are applied. Figure 2.10 shows the loading and constraint conditions applied to the model for this case.

The body force for the accident condition is increased to 133 g's [2.3]. The fuel elements do not impose any load on the divider for this drop configuration. Table 2.17 presents the resulting stress intensities for this drop scenario.

2.7.1.3 Side Drop

Similar to the previous paragraphs, the same finite element model used for the normal condition side drop case is utilized in this analysis with the exception of the force loading. Force distributions and constraint conditions employed in the model are depicted in Figure 2.11 and the resulting stresses are provided in Table 2.18.

2.7.1.4 Cg-Over-Corner Drop

The divider model only is considered in this analysis. Since the orientation of this drop is such that the Cg (center of gravity) of the divider falls over the corner of the model, the 63 g's of inertia loading [2.3] may be decomposed into 28.6 g's in the lateral direction and 56.1 g's in the vertical direction. The results of the accident bottom drop condition and those of the accident side drop conditions are scaled separately. These stresses are then combined by the square root of the sum of the square (SRSS) procedure to obtain the net effect on the divider for the Cg over corner drop condition.

Force distributions and constraint conditions employed in the model are depicted in Figure 2.12 for the case considered, and the resulting stresses are provided in Table 2.19.

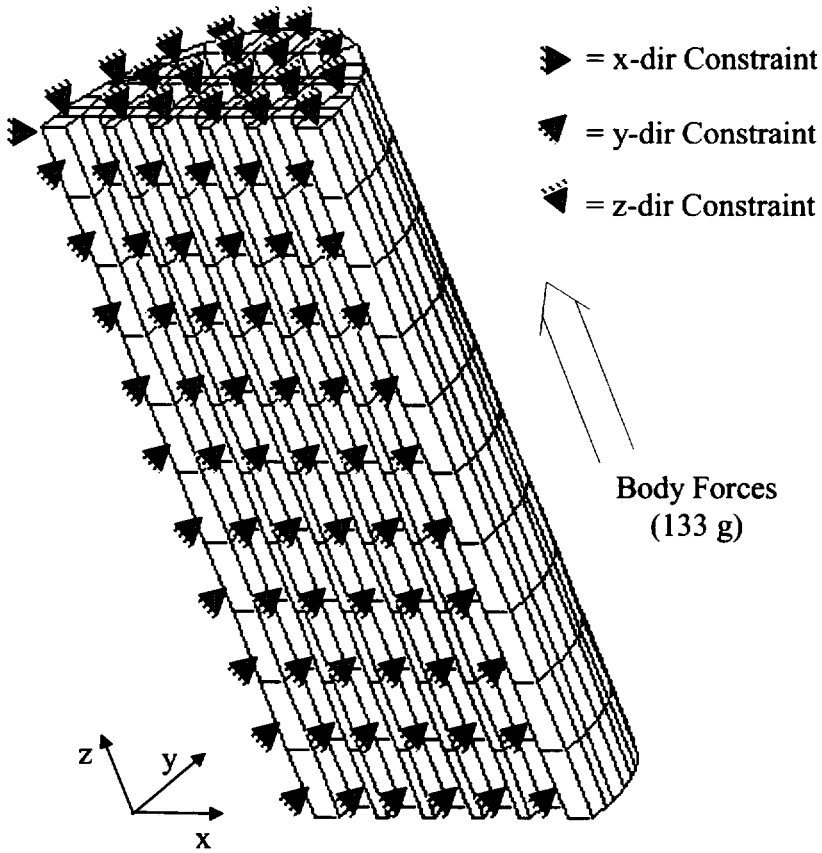

Figure 2.9. Accident Condition Head On Drop for MTR-Type Fuel Divider

Table 2.16. Accident Condition Head on Drop for MTR-Type Fuel Divider

ACCIDENT CONDITION

STRESS COMPONENTS	Pm	Pm+Pb	Shear
ALLOWABLE CRITERIA	0.7 Su	Su	.42 Su
ALLOWABLE VALUES (KSI)	42	60	25.2

LOADING CONDITION	MAX STRESS LOCATION	Component Pm	Allowable 2.4 Sm	Component Pm+Pb	Allowable Su
30 FOOT DROP ON TOP	**Upper Layer**				
	664	0.697	42	2.333	60
	691	5.533	42	19.971	60
	699	5.650	42	19.014	60
	Middle Layer				
	281	0.378	42	1.184	60
	Bottom Layer				
	61	0.362	42	1.149	60
	69	0.532	42	1.479	60
	139	1.245	42	3.671	60

Note: All allowables conservatively taken at 400 F.

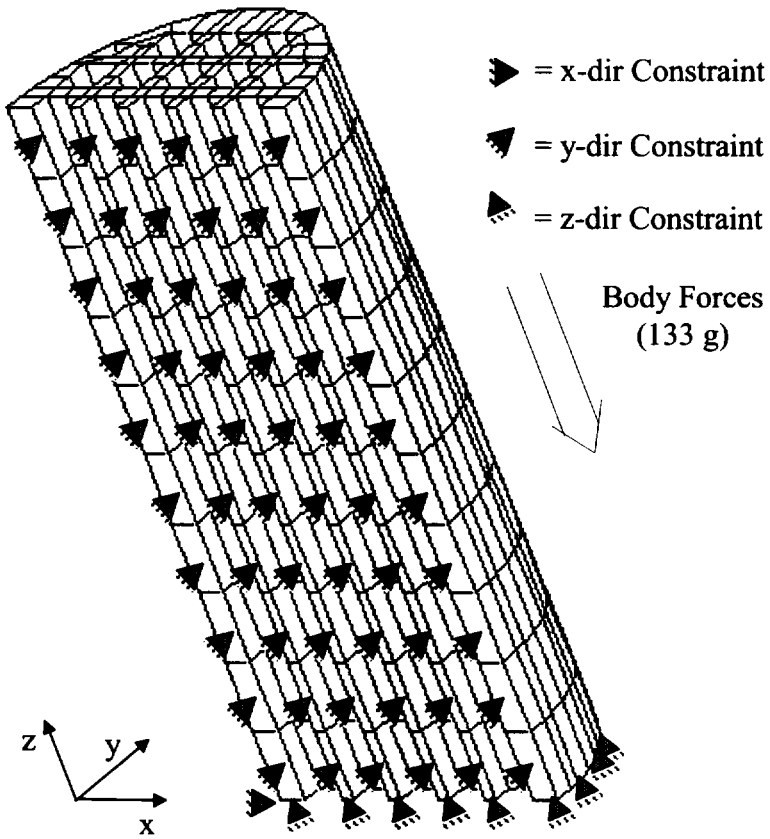

Figure 2.10. Accident Condition Bottom On Drop for MTR-Type Fuel Divider

Table 2.17. Accident Condition Bottom Drop for MTR-Type Fuel Divider

ACCIDENT CONDITION

STRESS COMPONENTS	Pm	Pm+Pb	Shear
ALLOWABLE CRITERIA	0.7 Su	Su	.42 Su
ALLOWABLE VALUES (KSI)	42	60	25.2

LOADING CONDITION	MAX STRESS LOCATION	Component Pm	Allowable 0.7 Su	Component Pm+Pb	Allowable Su
30 FOOT DROP ON BOTTOM	**Upper Layer**				
	664	0.065	42	0.185	60
	691	0.362	42	1.149	60
	699	0.532	42	1.479	60
	Middle Layer				
	281	0.451	42	1.431	60
	Bottom Layer				
	61	5.533	42	19.971	60
	69	5.650	42	19.014	60
	139	5.480	42	17.630	60

Note: All allowables conservatively taken at 400 F.

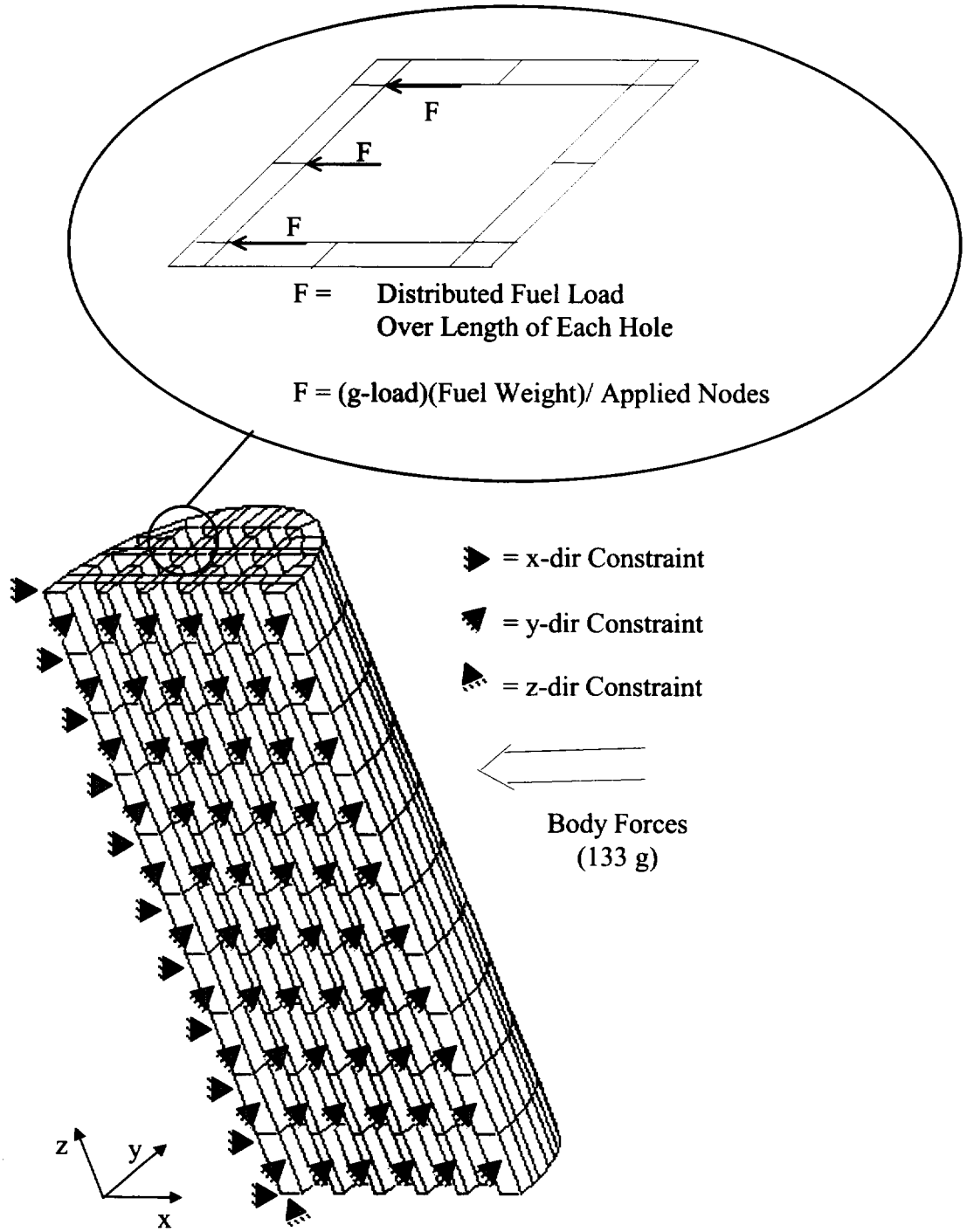

Figure 2.11. Accident Condition Side Drop for MTR-Type Fuel Divider

Table 2.18. Accident Condition Side Drop for MTR-Type Fuel Divider

ACCIDENT CONDITION

STRESS COMPONENTS	Pm	Pm+Pb	Shear
ALLOWABLE CRITERIA	0.7 Su	Su	.42 Su
ALLOWABLE VALUES (KSI)	42	60	25.2

LOADING CONDITION	MAX STRESS LOCATION	Component Pm	Allowable 0.7 Su	Component Pm+Pb	Allowable Su
30 FOOT DROP ON SIDE	**Upper Layer**				
	664	2.054	42	3.228	60
	691	5.937	42	17.247	60
	699	13.183	42	21.748	60
	Middle Layer				
	281	8.011	42	18.913	60
	Bottom Layer				
	61	5.937	42	17.247	60
	69	13.183	42	21.748	60
	139	13.800	42	22.429	60

Note: All allowables conservatively taken at 400 F.

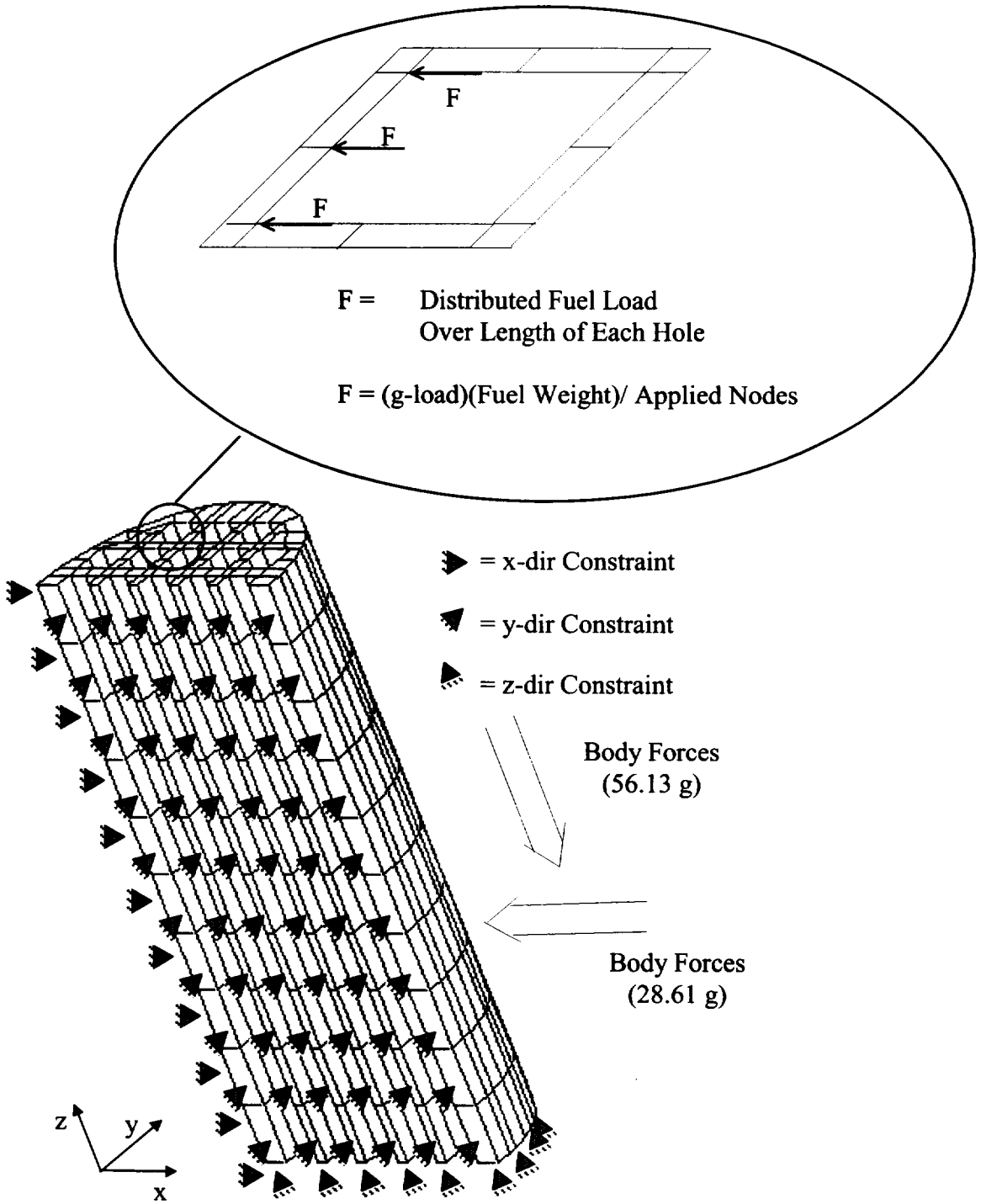

Figure 2.12. Accident Condition Cg-Over-Corner Drop for MTR-Type Fuel Divider

Table 2.19. Accident Condition Cg Over Corner for MTR-Type Fuel Divider

ACCIDENT CONDITION

STRESS COMPONENTS	Pm	Pm+Pb	Shear
ALLOWABLE CRITERIA	0.7 Su	Su	.42 Su
ALLOWABLE VALUES (KSI)	42	60	25.2

LOADING CONDITION	MAX STRESS LOCATION	Component Pm	Allowable 0.7 Su	Component Pm+Pb	Allowable Su
30 FOOT DROP CG Over Corner	Upper Layer				
	664	0.443	42	0.700	60
	691	1.286	42	3.742	60
	699	2.845	42	4.730	60
	Middle Layer				
	281	1.734	42	4.115	60
	Bottom Layer				
	61	2.661	42	9.223	60
	69	3.705	42	9.638	60
	139	3.763	42	9.217	60

Note: All allowables conservatively taken at 400 F.

2.7.1.5 Oblique Drop

The oblique drop orientations are bounded by the end and side drop loading conditions and need not be evaluated as described in Subsection 2.7.1. Further discussion of oblique drops is provided in Paragraph 2.7.1.4 of Reference [2.3].

2.7.1.6 Summary of Results

The accident drop condition maximum stresses are summarized in Table 2.20. As can be seen from the table, all stresses are well within allowable limits. Therefore, the integrity of the MTR-type fuel divider is maintained and remains fully functional for all accident drop conditions.

2.7.2 Puncture

Puncture conditions do not apply to the MTR-type fuel divider and need not be specifically addressed. The effects of the divider assembly on the cask body puncture analysis is negligible. As discussed previously in Subsection 2.1.1, the divider loading on the cask body remains well within the currently licensed limits.

2.7.3 Thermal

The thermal evaluation of the MTR-type fuel divider for the accident event is presented in Chapter 3.0. The structural evaluation of the resulting temperature distributions is presented in Subsection 2.6.1.

2.7.3.1 Summary of Pressures and Temperatures

The MTR-type fuel divider is not a pressure boundary, therefore, pressure loadings need not be addressed in the structural analysis.

The drop event is postulated to occur prior to the postulated accident fire [2.1], therefore, applicable design temperatures for the drop analysis are those provided in Table 2.5.

2.7.4 Immersion — Fissile Material

The criticality evaluation presented in Chapter 6.0 considers the effect of water in-leakage. Thus the requirements of 10CFR71 [2.1] Section 73(c)(4) and IAEA Safety Standards [2.12] are met.

2.7.5 Immersion — All Packages

A 21 psig external pressure due to immersion of the package in 50 feet of water as required by 10CFR71 [2.1] Section 73(c)(5) does not affect the MTR-type fuel divider and need not be addressed. Similarly the 2 MPa external pressure due to immersion of the package in 200 meters of water as required by IAEA Safety Standards [2.12] does not affect the MTR-type fuel divider and need not be addressed.

2.7.6 Summary of Damage

Table 2.20 presents the summary of maximum stresses in the MTR-type fuel divider during the various accident conditions, which shows adequate margin of safety throughout. It is therefore concluded that the MTR-type fuel divider meets the design criteria when subjected to the accident conditions as specified in 10CFR71.73 [2.1].

Table 2.20. Summary of Results for Accident Conditions for MTR-Type Fuel Divider

LOADING CONDITIONS	High Stress Element	Element Location	Stress Type	Stress (ksi)	Allowable (ksi)	Margin of Safety
Normal Conditions						
30 foot head on drop (Load)	691	Upper Layer Fuel Divider	Pm + Pb	19.97	60	2.00
30 foot bottom drop (Load)	61	Lower Layer Fuel Divider	Pm + Pb	19.97	60	2.00
30 foot side drop (Load)	139	Second Layer Fuel Divider	Pm + Pb	22.43	60	1.68
30 foot Cg over corner drop (Load)	69	Lower Layer Fuel Divider	Pm + Pb	9.64	60	5.23

2.7.6.1 Buckling Analysis

For the MTR-type divider, both general and local instability modes are investigated below. The general mode of failure is dictated by the slenderness ratio L/ρ, where L represents the length of the divider, and ρ represents the least radius of gyration of the cross-section [2.8].

The least radius of gyration can be expressed as

$$\rho = \sqrt{\frac{I_{\min}}{A}},$$

where I_{min} is the smallest moment of inertia of the cross-sectional area, and A is cross-sectional area [2.9].

The least moment of inertia about the cross-sectional area was found to be:

$$I_{min} = 15{,}409.67 \text{ in}^4.$$

The cross-sectional area, based on GE Cert. Dwg. 105E9557, was found to be:

$$A = 288.21 \text{ in}^2.$$

Using these values, the radius of gyration becomes:

$$\rho = 7.31 \text{ in.}$$

Assuming a 52 in. height, the slenderness ratio becomes 7.11.

A column with this slenderness ratio is classified as a compression member, and is not susceptible to gross elastic or inelastic buckling [2.9]. In the event that the member stresses approach their yield values, it is conceivable that local instabilities could form. Nevertheless, in the specific case of this analysis, all stresses are well below their yield values and therefore buckling is not predicted.

2.7.6.2 Extreme of Total Stress Intensities

The extreme of the total stress intensity range must not exceed the value of 2(Sa) given for 10 cycles [2.7] per [2.2] Paragraph c.7. This value turns out to be 1370 ksi, which far exceeds the sum of the maximum stress intensities for the hypothetical accident condition and the normal condition. This sum is a bound on said extreme range. Therefore, the extreme of the total stress intensity range is much smaller than its permitted limit and poses no concern.

2.8 SPECIAL FORM

This section does not apply to the MTR-type divider.

2.9 FUEL RODS

The Model 2000 Package remains leak tight under all normal and accident conditions as demonstrated in the Package Safety Analysis Report [2.3]. Therefore, the MTR-type fuel cladding need not provide containment to the fuel material.

2.10 REFERENCES

[2.1] Code of Federal Regulations, Title 10, Part 71, 1992.

[2.2] U.S. NRC Regulatory Guide 7.6, "Design Criteria for the Structural Analysis of Shipping Cask Containment Vessels", Revision 1, March, 1978.

[2.3] Safety Analysis Report, "G.E. Model 2000 Model 2000 Shipping Package", NEDO-31581, April, 1988.

[2.4] Safety Analysis Report, "Model 2000 Radioactive Material Transport Package — 2000 Watts Decay Heat Upgrade", NEDO-32318, July, 1994.

[2.5] ASME, "Boiler and Pressure Vessel Code", Section III, Division I, Subsection NG, 1989.

[2.6] U.S. NRC Regulatory Guide 7.8, "Load Combinations for the Structural Analysis of Shipping Casks", May, 1977.

[2.7] ASME, "Boiler and Pressure Vessel Code", Section III, Division I, Appendix I, 1989.

[2.8] Bruhn, E. F., "Analysis and Design of Flight Vehicle Structures", Tri-State Offset Company, 1965.

[2.9] Roark, R.J., and Young, W.C., "Formulas for Stress and Strain", McGraw-Hill, 5th Ed., 1975.

[2.10] Shigley, J. E. and Mischke, C. R., "Mechanical Engineering Design", 5th Ed. McGraw-Hill. New York. 1989.

[2.11] Private communication with the Department of Meteorology at San Jose State University, San Jose, CA, 28 July 1993.

[2.12] Safety Series No. 6, "Regulations for the Safe Transport of Radioactive Material", 1985 Edition, International Atomic Energy Agency, Vienna, 1990.

2.11 APPENDIX

2.11.1 Tower Shielding Reactor Structural Evaluation

This appendix presents the structural evaluation of the basket for the Tower Shielding Reactor (TSR) MTR-type fuel and its conformance with all applicable structural criteria. Normal and hypothetical accident condition evaluations are performed in accordance with 10CFR71 [2.1] requirements.

The results of the engineering evaluations are presented to demonstrate that the TSR fuel basket remains functional under normal transport and hypothetical accident conditions, and as such, maintains the configuration of the contained TSR fuel elements to assure criticality and shielding safety. The TSR core is spherical in nature, with the fuel being comprised of 5 different geometries. Figure 2.13 illustrates the general configuration of the fuel elements.

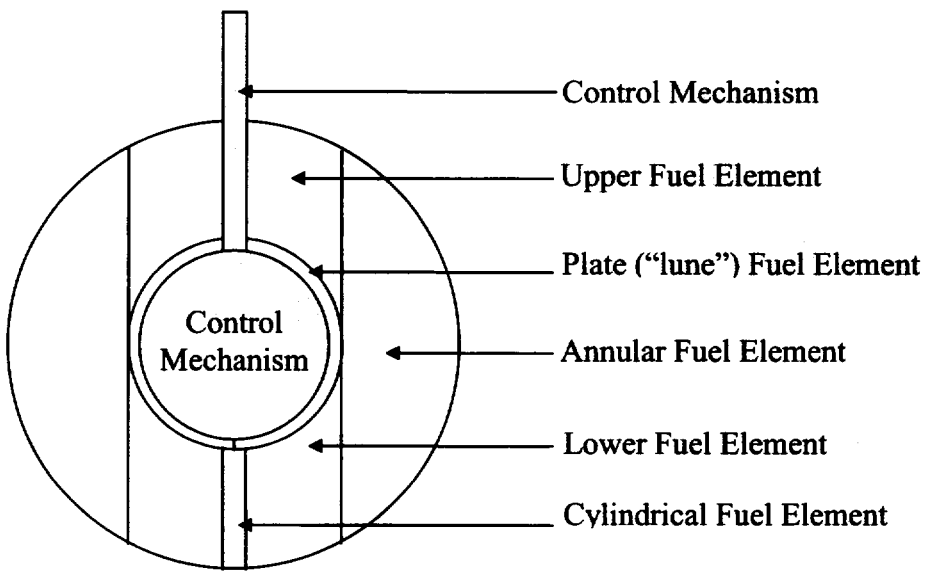

Figure 2.13. TSR Fuel Configuration

The analysis investigates the TSR fuel basket stresses resulting from the vertical and lateral accelerations determined in Reference [2.3] for normal and accident conditions. The engineering evaluation consists of hand calculations along with static, linear elastic finite element analyses of the TSR fuel basket design for each of the applicable loading conditions. The results of these analyses are compared against the allowable stress limit criteria specified by Regulatory Guide 7.6 [2.2]. The LIBRA Finite Element Computer Code is used in this evaluation.

2.11.1.1 Structural Design

The Tower Shielding Reactor (TSR) fuel basket is a stainless steel weldment of plate, tubing and pipe designed to fit inside the Model 2000 cask cavity. The TSR fuel basket is a three piece (stacking sections) assembly with cavities for the various TSR fuel elements, and is designed to accept just over one-half of the TSR fuel elements. The three basket sections maintain the TSR fuel element separation under worst case accident conditions.

The lower of the three sections of the TSR fuel basket can hold up to four Upper Fuel Elements or four Lower Fuel Elements, as shown in Figure 2.14. Total fuel loading in the lower section is limited to a maximum of 1412 grams ^{235}U. The section consists of a 26-1/4 inch OD by 14-3/8-inch high thick stainless steel tube welded to a stainless steel base plate. The pie-shaped fuel elements are contained in a compartment constructed of 3/8 inch stainless steel plate and a central stainless steel pipe. The stainless steel pipe extends up to the top of the basket to serve as a lifting bar for the basket.

The middle section of the TSR fuel basket can hold up to four Fuel Cover (Lune) Plates, as shown in Figure 2.14. Total fuel loading in the middle section is limited to a maximum of 304 grams ^{235}U. This section consists of a 26-1/4 inch OD by 11-5/8 inch high thick stainless steel tube welded to a stainless steel base plate. Each of the fuel elements is shored by stainless steel rods welded to the base plate.

The upper TSR fuel basket section can hold up to six Annular Fuel Elements and one Cylindrical Fuel Element, as shown in Figure 2.14. Total fuel loading in the upper section is limited to a maximum of 2677 grams ^{235}U. This section consists of a 26-1/4 inch OD by 27-3/8 inch high thick stainless steel tube welded to a stainless steel base plate. The annular fuel elements are contained in compartments constructed of 3/8 inch stainless steel plate and a centrally positioned stainless steel pipe. The cylindrical fuel element is contained in a separate compartment confined by two annular fuel element divider walls.

All TSR fuel basket cavities and sections contain water drain passages compatible with the Model 2000 Cask drainage system.

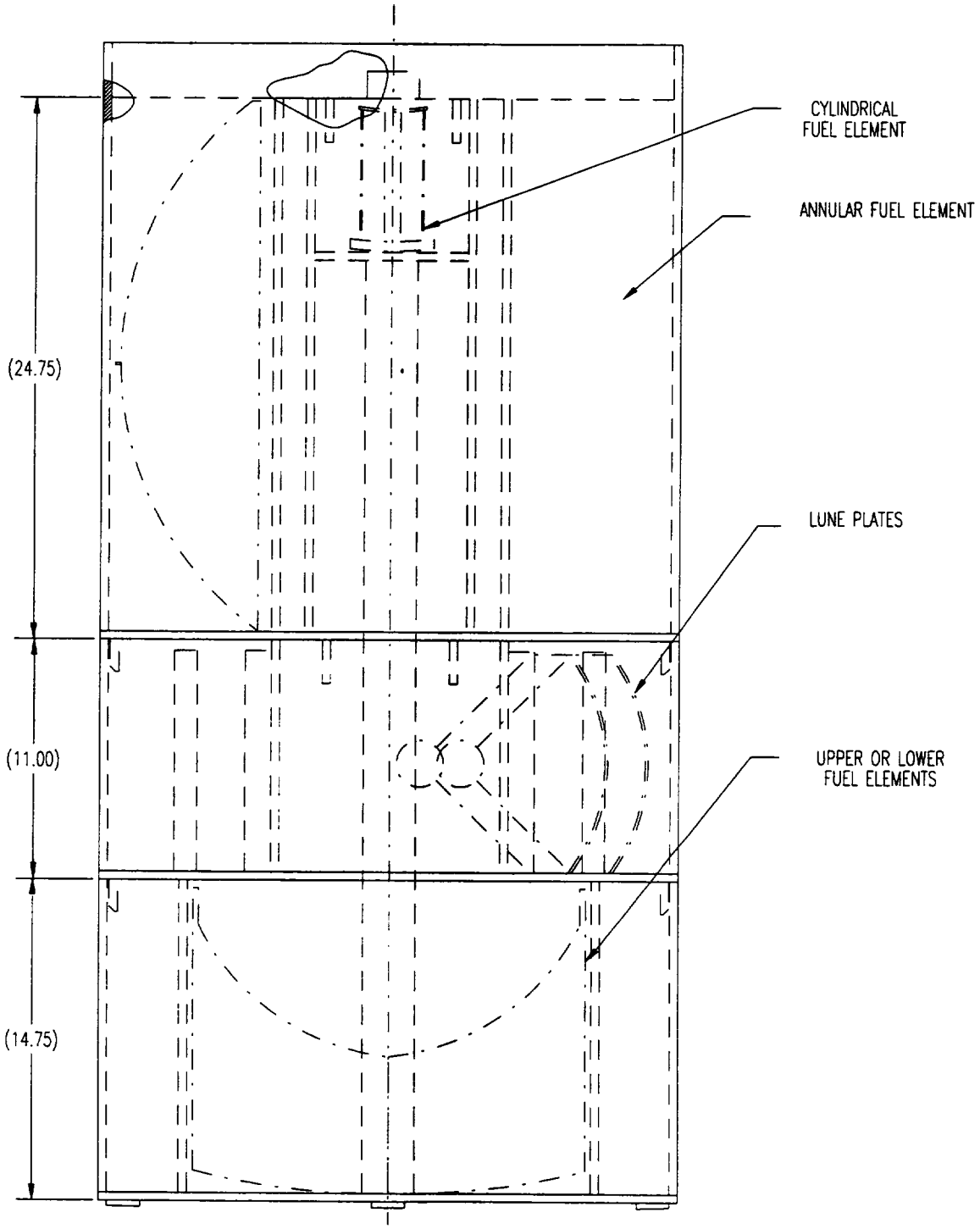

Figure 2.14. Tower Shielding Reactor MTR-Type Fuel Basket

2.11.1.2 Design Criteria

Based on the assumptions used in the criticality study presented in Section 6.0, this analysis must demonstrate that the vertical separation of the fuel in the three compartments is maintained. In addition, it must be shown that following the worst case lateral loading condition, structural integrity of the vertical fuel dividers and the center pipe of the upper compartment is maintained, and deformations are negligible.

2.11.1.2.1 Allowable Stresses

This section defines the allowable limits for primary membrane (Pm), primary bending (Pb), secondary (Q), bearing, and shear stresses and the required factor of safety against instability (i.e., buckling) for all components in the TSR fuel basket. The basket is designed in accordance with the Regulatory Guide 7.6 [2.2] and Subsection NG[2.5]. Table 2.1 summarizes the allowable criteria used in this analysis.

2.11.1.2.2 Component Weights

The weights of the TSR fuel basket components and fuel are summarized in Table 2.21. The maximum total weight of 1368 lbs is less than the maximum package weight of 5450 lbs as defined in Reference [2.3].

Table 2.21. Maximum TSR Basket Component Weight

Section	Structure (lbs)	Fuel (lbs)	Total (lbs)
Lower	321	(4) Upper or Lower Fuel Segments x 22 lbs. = 88	409
Middle	272	(4) Lune Plates x 2.25 lbs. = 9	281
Upper	523	(6) Annular Fuel Elements x 24.25 lbs + (1) Cylindrical Fuel Element x 9.5 lbs = 155	678
Total	**1116**	**252**	**1368**

2.11.1.2.3 Weld Considerations

All safety-related welds used in the TSR fuel basket have been designed as full-penetration welds, which will be inspected by both penetrant testing (PT) and radiographic testing (RT). ASME Code Section III, Division I, Subsection NG [2.5] indicates that the weld quality factor for this type of weld is 1.0. This enables the conclusion that the weld strength will match that of the parent material.

2.11.1.3 Mechanical Properties of Materials

The TSR fuel basket is fabricated from austenitic stainless steels Type 304 (SA-312 and SA-240). Type 304 stainless steel is an ASME Code approved material with high corrosion resistance. The density of this stainless steel used in the analysis is 0.28 lb/in^3. A listing of the material properties used in the analysis is included in Table 2.22.

Table 2.22. Mechanical Properties of Materials

Steel Material Spec.	Type or Grade	Stress (ksi)				Young's Modulus (10^6 psi)	Coef of Thermal Expansion (10^{-6} in/in°F)
		Temp °F	Yield Sy	Ultimate Su	Elastic Allowable Sm		
		-100	—	—	—	29.1	—
SA-240		70	—	—	—	28.3	—
(Plate)		100	30.0	75.0	20.0	—	8.55
and	304	**200**	**25.0**	**71.0**	**20.0**	**27.6**	**8.79**
SA-312		300	22.5	66.0	20.0	27.0	9.00
(Pipe)		400	20.7	64.4	18.7	26.5	9.19
		500	19.4	63.5	17.5	25.8	9.37
		600	18.2	63.5	16.4	25.3	9.53

Notes: (1) Reference [2.7]. Tables I-1.2, I-2.2, I-3.2, I-5.0 and I-6.0

2.11.1.4 General Standards for All Packages

The existing Model 2000 Package SAR [2.3] provides justification that the general standards for the packaging are met. Additional information specifically applicable to the TSR fuel basket is provided in the following sections.

2.11.1.5 Normal and Accident Conditions of Transport

The TSR fuel basket, when subjected to the normal and accident conditions of transport as specified in 10CFR71.71, meets the performance requirements specified in Subpart E of 10CFR71 [2.1]. This is demonstrated in the following sections where each condition is addressed and shown to meet the applicable design criteria for both the normal and accident conditions.

2.11.1.5.1 Thermal Considerations

The thermal evaluation for the normal and accident events is performed in Chapter 3.0. Due to the extremely small fuel heat load, the temperature gradients in the basket are minimal, thus making thermal stresses negligible. Based on this small heat load, all material properties are evaluated at 200°F.

2.11.1.5.2 Free Drop

The definitions stated in Paragraphs 2.6.7 and 2.7.1 for the MTR-Type Fuel Dial and accident condition free drop scenarios are also applicable for the TSR Fuel Basket.

2.11.1.5.3 Vertical Drop

The ncern for this loading condition, based on the assumptions used in the criticality analysis performed in Chapter 6.0, is to demonstrate that separation of the three compartments is maintained during normal and accident loading conditions. In order to maintain vertical separation, it must be shown that the structural integrity of the outer cylinder, as well as the compartment floors, is maintained.

The bottom-on drop configuration is used here as the limiting case since the fuel elements contained in the individual sections of the upper compartment represent the greatest weight (48.5 lbs, based on 2 annular fuel elements in a single compartment) to come in contact with a compartment floor. In addition, stress levels in the outer cylinder are not affected by the vertical drop orientation.

The following analytical calculations evaluate the stresses in the outer shell of the TSR basket as a result of a 69g and 133g vertical acceleration. The loads, reactions and constraining conditions considered in the basket vertical drop analysis are illustrated in Figure 2.15.

Contribution of structural support by the central tube and other members within the basket are neglected in this analysis. It is assumed that the outer cylinder supports the entire load.

The loading on the model is from the body forces of the basket and the fuel. A body force is applied throughout the model in the negative z-direction, as is shown in Figure 2.15. The constraint is assumed to exist at the lower edge of the cylinder, which simulates the contact with the lower interior surface of the cask during a bottom on drop scenario.

Since the loading is in terms of acceleration, the applied force is a function of the TSR basket weight plus the fuel weight. This combined load is: W = 1368 lb. The load is conservatively applied at the upper surface over the cross-sectional area of the outer cylinder.

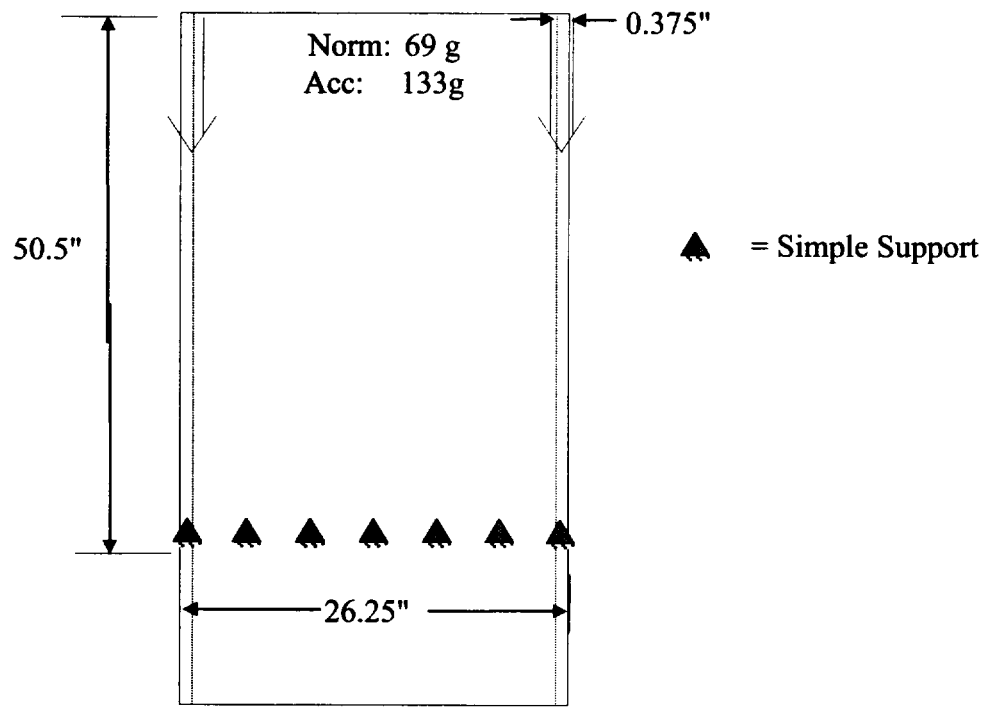

Figure 2.15. Vertical Drop Condition for TSR Fuel Basket

The compressive stress in the outer cylinder wall is expressed by:

$$\sigma_c = \frac{Wg}{A},$$

where: W = total weight = 1368 lbs,
g = vertical acceleration = 69 and 133, and
A = cross-sectional area = $\pi(r_o^2 - r_i^2) = 30.5\ in^2$

The compressive stress (σ_c) in the outer cylinder wall is found to be 3.09 ksi for the normal condition and 5.97 ksi for the accident condition.

The critical buckling stress (σ_{cr}) is evaluated using the *parabolic formula* [2.10] for intermediate-length columns with central loading. The form of the equation is:

$$\sigma_{cr} = S_y - \left(\frac{S_y}{2\pi}\frac{l}{k}\right)^2 \frac{1}{CE}, \text{ where}$$

S_y = Yield Stregth = 25000 psi

l = Column Length = 50.5 in

A = Cross-Sectional Area = 30.5 in^2

I = Moment of Inertia = $\frac{\pi}{64}\left(D_o^2 - D_i^2\right) = 2551\ in^4$

k = Least Radius of Gyration = $\sqrt{\frac{I}{A}}$ =83.7 in

C = End Condition = 1

E = Modulus of Elasticity = 27.6 x 10^6 psi.

Using these values, the critical buckling stress is found to be 24,999.8 psi.

In addition to the integrity of the outer shell, it is also necessary to demonstrate that stress levels in the floor of the upper compartment are within allowable limits. A LIBRA finite element model was generated to evaluate this scenario. The model includes a detailed section of the upper compartment floor. The model is supported at the approximate locations of the welds by simple supports or "hinged boundary conditions". The simple support assumption is conservative for the stress in the plate since it will allow a higher stress to exist in the plate than would be the case for fixed supports. It was assumed that the impact of the fuel with the membrane occurs uniformly along a line. Figure 2.16 is a contour plot illustrating the location maximum observed membrane plus bending stress for the Normal Condition.

The weight of the fuel used in these calculations is taken as that of the heaviest fuel segment to come in contact with a compartment floor.

The nodal load was calculated using:

Fuel Weight: Wf = 48.5 lbs (2 Annular Fuel Elements in Upper Compartment)

g-load: g = 69 (normal)

g= 133 (accident)

No. Nodes: N = 11

Distributed Load:

Normal Conditions: $$P = \frac{Wg}{N} = \frac{48.5(lb)69}{11 nodes} = 304.23 \frac{lb}{node}$$

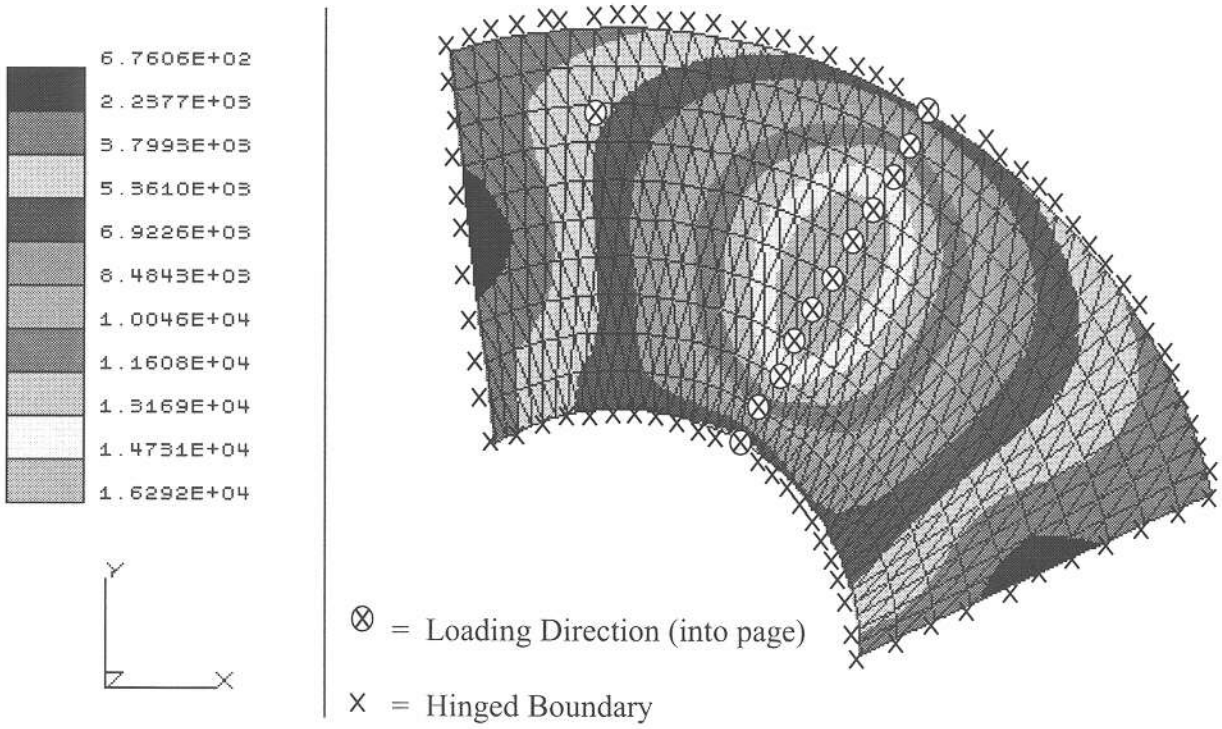

Figure 2.16. Finite Element Model of TSR Upper Section Membrane

C01

The LIBRA finite element model was run using the normal condition inputs (69g). Membrane stress (Pm) was determined as the average of the inner and outer surface maximum principal stresses. The membrane plus bending stress (Pm + Pb) was determined as the maximum observed principal stress at the shell surface.

Accident condition stresses were evaluated by scaling the normal condition stresses by the ratio of the g loads, i.e, scaling factor = 133 g/69 g = 1.928.

The resulting maximum stresses were found to be:

Normal Conditions:	Pm = 8.57 ksi	Pm + Pb = 16.29 ksi
Accident Conditions:	Pm = 16.52 ksi	Pm + Pb = 31.4 ksi

For criticality concerns, it is necessary to evaluate the deflections of the upper compartment floor in order to determine if the deformed geometry will deviate from that used in the criticality study. The maximum deflections observed for the normal and accident conditions were: $\delta = .015$ in., and $\delta = .029$, respectively. These deflections are considered negligible.

2.11.1.5.4 Side Drop

The side drop condition imposes a lateral g-load to the TSR Basket. A g-load value of 69 is used for the normal condition and 133 for the accident condition. On the basis of the criticality study presented in Chapter 6.0, the primary concern for this loading condition is to maintain the integrity of the central tube and the fuel dividers of the upper compartment. For the middle and bottom sections, it is not necessary to prove that lateral separation of the fuel is maintained for side drop condition, since the criticality study of Chapter 6.0 has shown the fuel contents of these individual sections to be subcritical under the most conservative conditions.

To accurately evaluate the stresses in the components of the upper compartment as a result of the fuel impact during a side drop scenario, three LIBRA Finite Element Models were constructed. The models allowed an investigation of the stresses caused by the impact of the fuel contained in a single section of the upper compartment. This was done for three separate load directions. Figure 2.17 illustrates the loading conditions used in the models for the three separate cases.

The models are supported at the approximate locations of the welds by simple supports ("hinged boundary conditions"). The simple support assumption is conservative for the stress in the plates since it will allow the stresses in the plate to be greater than the case using fixed supports.

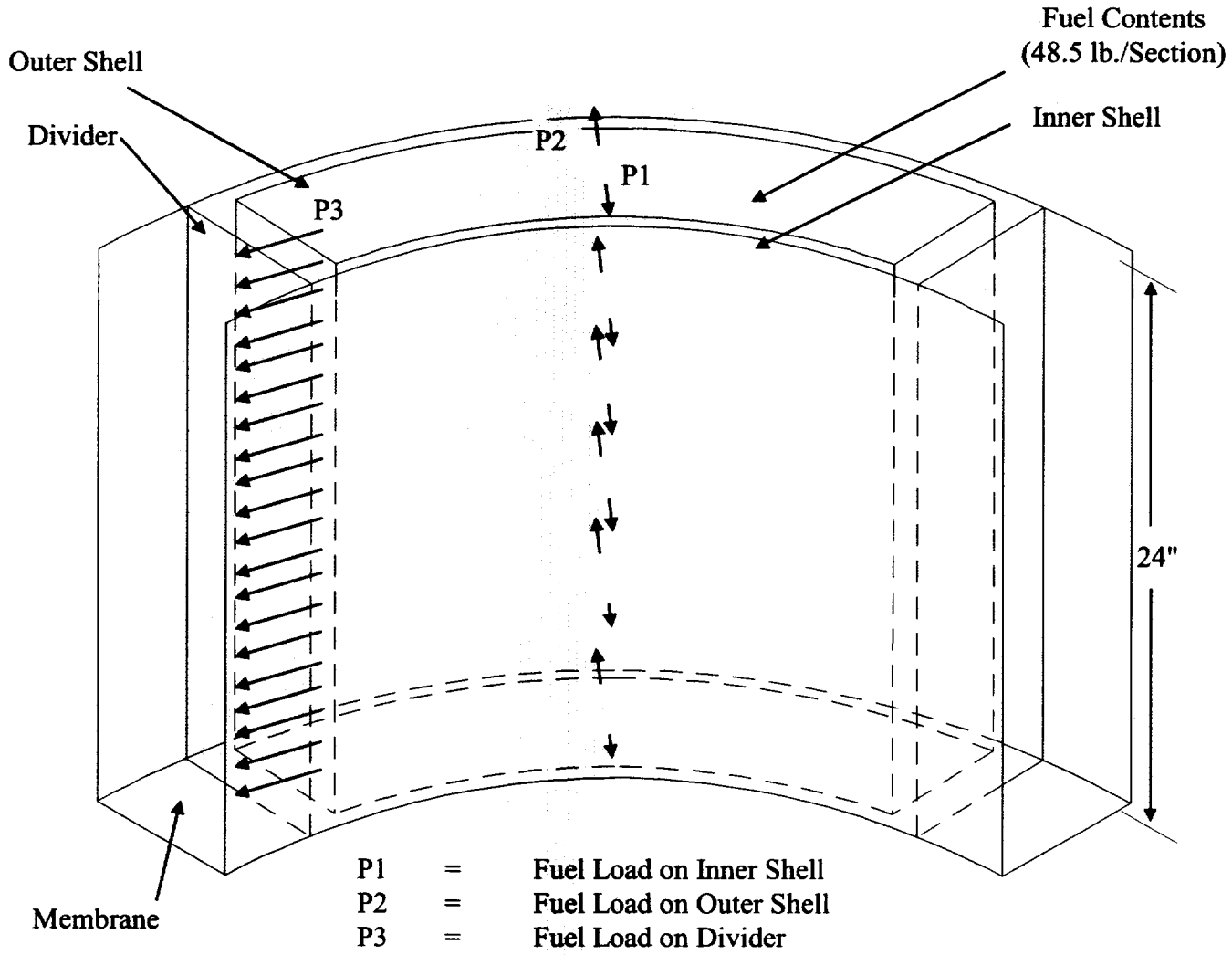

Figure 2.17. TSR Fuel Basket Inner Cylinder Finite Element Model

2.11.1.5.4.1 Inner Cylinder (Fuel Impact)

It was assumed that the impact of the fuel with the inner cylinder occurs along a line with uniform distribution. Since the fuel section is a symmetrical 120° section, only one half of the section is modeled. Figure 2.18 is the contour plot of the maximum observed membrane plus bending stress, with the loading and boundary conditions added for clarity.

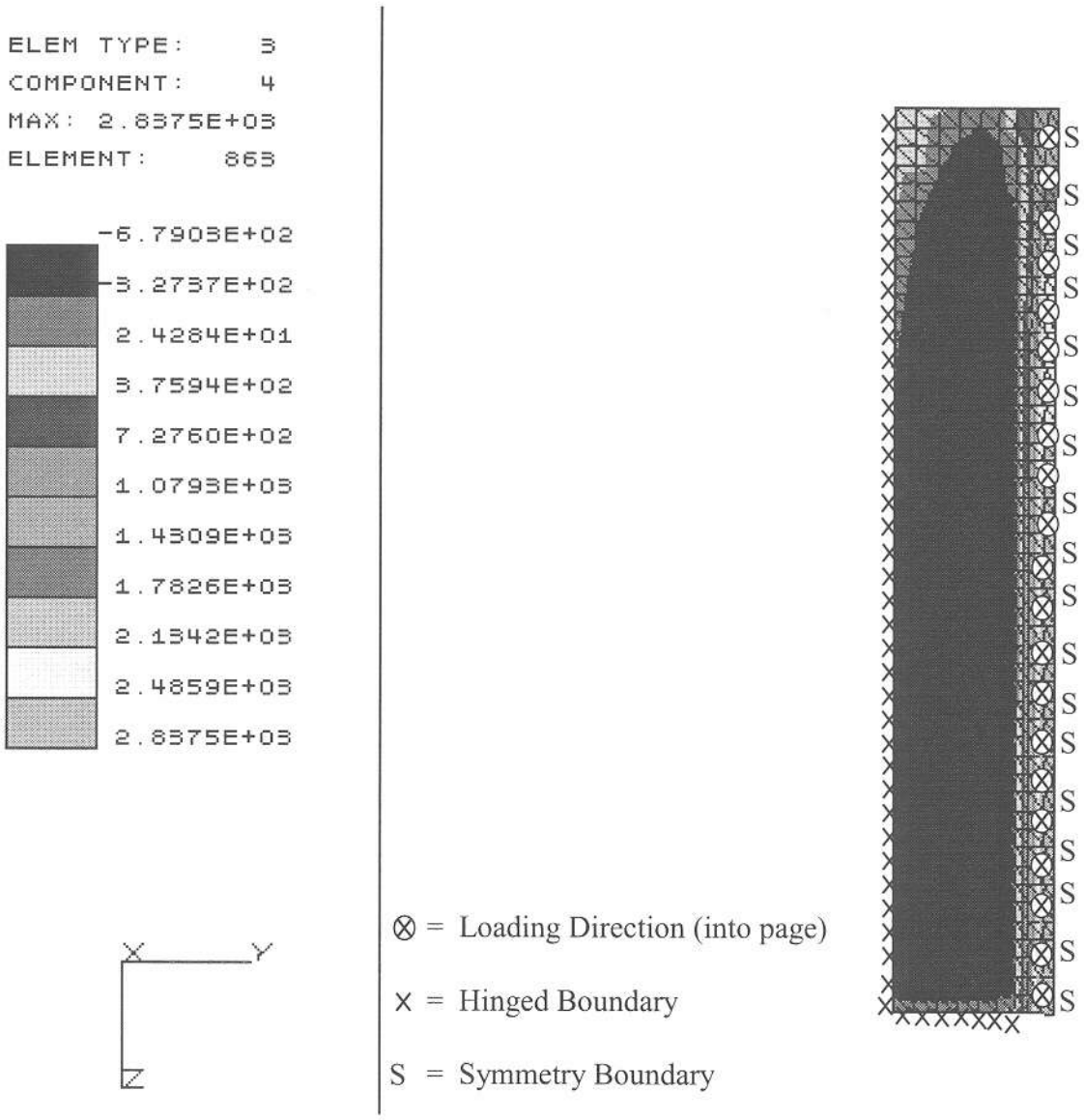

Figure 2.18. Finite Element Model of TSR Inner Cylinder

C02

The nodal load was calculated using:

Fuel Weight: Wf = 24.25 lbs (1/2 Weight of 2 Annular Fuel Elements in Upper Compartment)

g-load: g = 69 (normal)

g= 133 (accident)

No. Nodes: N = 50

Distributed Load:

Normal Conditions: $P = \frac{Wg}{N} = \frac{24.25(lb)69}{50 nodes} = 33.465 \frac{lb}{node}$

The LIBRA finite element model was run using the normal condition inputs (69g). Membrane stress (Pm) was determined as the average of the inner and outer surface maximum principal stresses. The membrane plus bending stress (Pm + Pb) was determined as the maximum observed principal stress at the shell surface.

Accident condition stresses were evaluated by scaling the normal condition stresses by the ratio of the g loads, i.e, scaling factor = 133 g/69 g = 1.928.

The resulting maximum stresses were found to be:

Normal Conditions:	Pm = 2.33 ksi	Pm + Pb = 2.84 ksi
Accident Conditions:	Pm = 4.49 ksi	Pm + Pb = 5.48 ksi

For criticality concerns, it is necessary to evaluate the deflection of the inner cylinder in order to determine if the deformed geometry will deviate from that used in the criticality study. The maximum deflections observed for the normal and accident conditions were: δ = .0009 in. and δ = .0017, respectively. These deflections are considered negligible.

2.11.1.5.4.2 Outer Cylinder (Fuel Impact)

It was assumed that the impact of the fuel with the outer cylinder occurs along a line with uniform distribution. Since the fuel section is a symmetrical 90° section, only one half of the section is modeled. Figure 2.19 is the contour plot of the maximum observed membrane plus bending stress, with the loading and boundary conditions added for clarity.

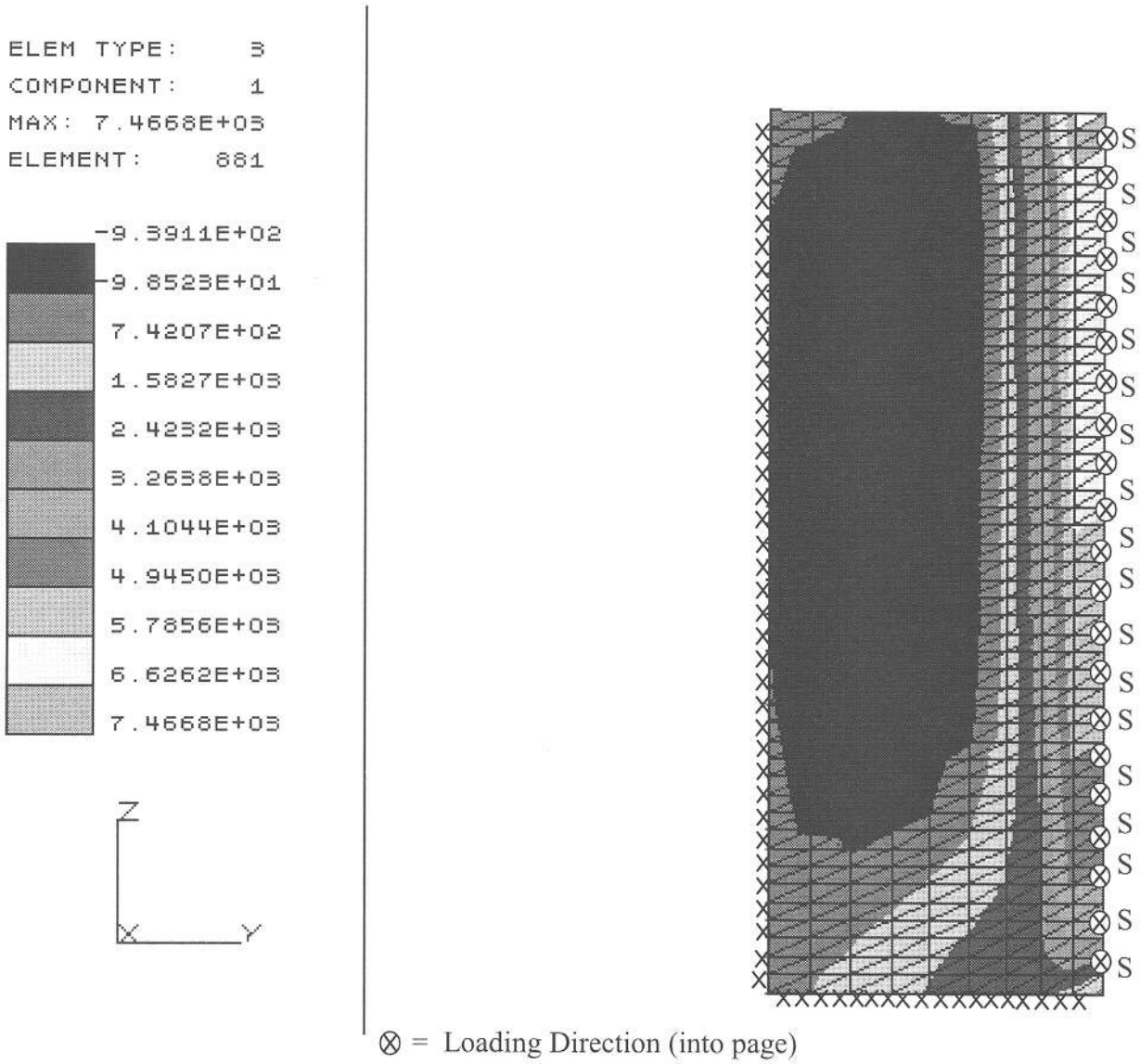

⊗ = Loading Direction (into page)

X = Hinged Boundary

S = Symmetry Boundary

Figure 2.19. Finite Element Model of TSR Outer Cylinder

C03

The nodal load was calculated using:

Fuel Weight: Wf = 24.25 lbs (1/2 Weight of 2 Annular Fuel Elements in Upper Compartment)

g-load: g = 69 (normal)

g= 133 (accident)

No. Nodes: N = 50

Distributed Load:

Normal Conditions: $$P = \frac{Wg}{N} = \frac{24.25(lb)69}{50 nodes} = 33.465 \frac{lb}{node}$$

The LIBRA finite element model was run using the normal condition inputs (69g). Membrane stress (Pm) was determined as the average of the inner and outer surface maximum principal stresses. The membrane plus bending stress (Pm + Pb) was determined as the maximum observed principal stress at the shell surface.

Accident condition stresses were evaluated by scaling the normal condition stresses by the ratio of the g loads, i.e, scaling factor = 133 g/69 g = 1.928.

The resulting maximum stresses were found to be:

Normal Conditions:	Pm = 4.92 ksi	Pm + Pb = 7.47 ksi
Accident Conditions:	Pm = 9.49 ksi	Pm + Pb = 14.40 ksi

For criticality concerns, it is necessary to evaluate the deflection of the outer cylinder in order to determine if the deformed geometry will deviate from that used in the criticality study. The maximum deflections observed for the normal and accident conditions were: δ = .0046 in. and δ = .0089, respectively. These deflections are considered negligible.

2.11.1.5.4.3 Divider Wall (Fuel Impact)

It was assumed that the impact of the fuel with the divider wall occurs along a line with the distribution being equal along this line. Figure 2.20 is the contour plot of the maximum observed membrane plus bending stress, with the loading and boundary conditions added for clarity. The boundary condition on the right side of the model represents the minimum weld length of 13 inches.

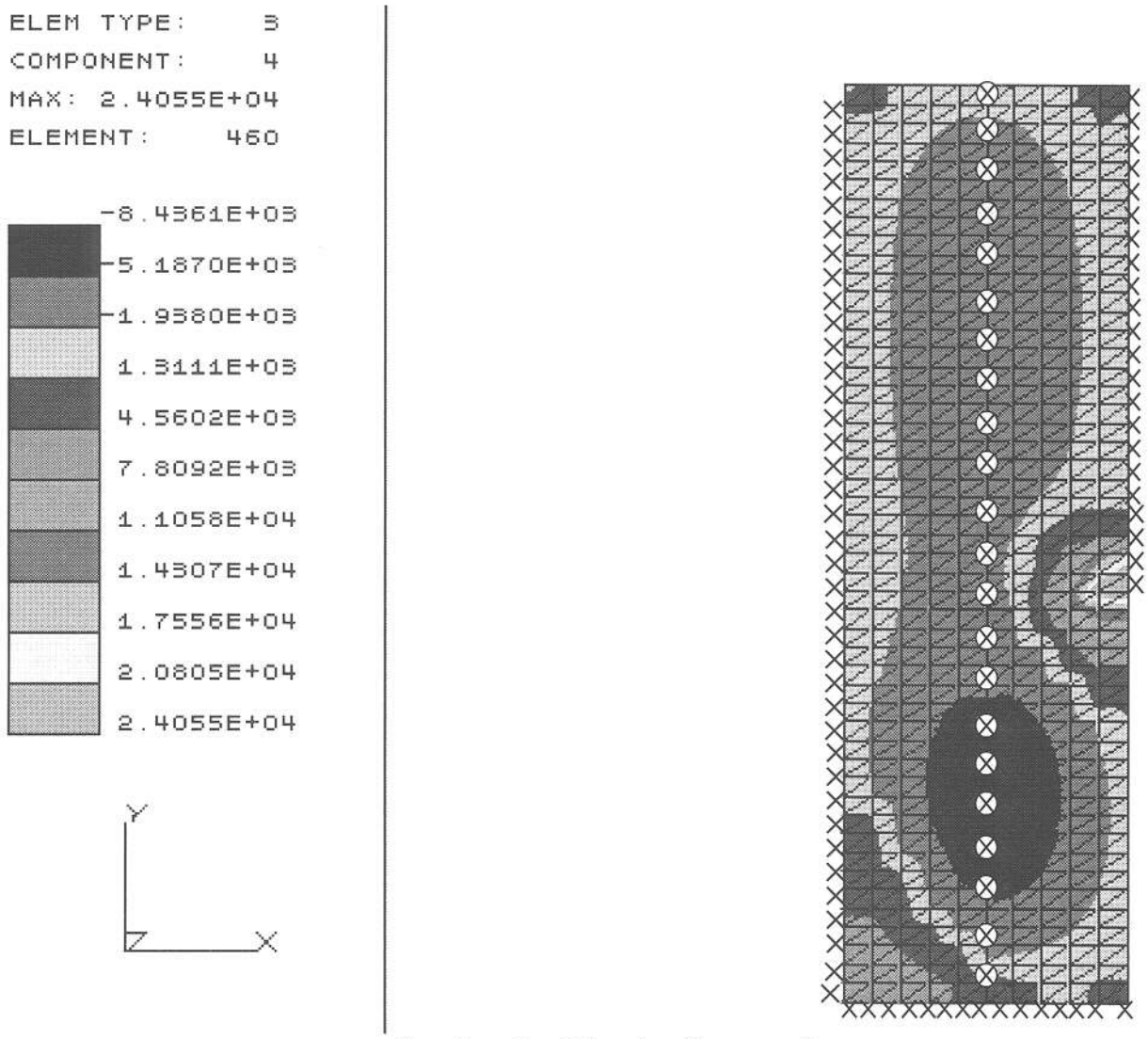

⊗ = Loading Direction (into page)

X = Hinged Boundary

Figure 2.20. Finite Element Model of TSR Upper Section Divider Wall

C04

The nodal load was calculated using:

Fuel Weight: Wf = 48.5 lbs (Weight of 2 Annular Fuel Elements in Upper Compartment)

g-load: g = 69 (normal)

g= 133 (accident)

No. Nodes: N = 50

Distributed Load:

Normal Conditions: $$P = \frac{Wg}{N} = \frac{48.5(lb)69}{50 nodes} = 66.93 \frac{lb}{node}$$

The LIBRA finite element model was run using the normal condition inputs (69g). Membrane stress (Pm) was determined as the average of the inner and outer surface maximum principal stresses. The membrane plus bending stress (Pm + Pb) was determined as the maximum observed principal stress at the shell surface.

Accident condition stresses were evaluated by scaling the normal condition stresses by the ratio of the g loads, i.e, scaling factor = 133 g/69 g = 1.928.

The resulting maximum stresses were found to be:

Normal Conditions:	Pm = 17.70 ksi	Pm + Pb = 24.05 ksi
Accident Conditions:	Pm = 34.13 ksi	Pm + Pb = 46.37 ksi

For criticality concerns, it is necessary to evaluate the deflection of the outer cylinder in order to determine if the deformed geometry will deviate from that used in the criticality study. The maximum deflections observed for the normal and accident conditions were: δ = .0223 in and δ = .0430, respectively. These deflections are considered negligible.

2.11.1.5.5 Summary of Results

Table 2.23 summarizes the results of the vertical drop stresses. Table 2.24 summarizes the results of side drop stresses. The allowable stresses are based on Reference [2.2].

Table 2.23. TSR Vertical Drop Stresses

Component	Condition	Pm	Allowable	Pm+Pb	Allowable	Minimum Safety Factor
Outer	Normal	3.09 ksi	20 ksi	N/A	30 ksi	6.47
Cylinder	Accident	5.96 ksi	48 ksi	N/A	71 ksi	8.05
Upper	Normal	8.57 ksi	20 ksi	16.29 ksi	30 ksi	1.84
Floor	Accident	16.52 ksi	48 ksi	31.40 ksi	71 ksi	2.26

Table 2.24. TSR Side Drop Stresses

Component	Condition	Pm	Allowable	Pm+Pb	Allowable	Minimum Safety Factor
Inner	Normal	2.33 ksi	20 ksi	2.84 ksi	30 ksi	8.58
Cylinder	Accident	4.49 ksi	48 ksi	5.48 ksi	71 ksi	10.69
Outer	Normal	4.92 ksi	20 ksi	7.47 ksi	30 ksi	4.02
Cylinder	Accident	9.49 ksi	48 ksi	14.40 ksi	71 ksi	4.93
Fuel	Normal	17.70 ksi	20 ksi	24.05 ksi	30 ksi	1.13
Divider	Accident	34.13 ksi	48 ksi	46.37 ksi	71 ksi	1.41

2.11.2 Summary of Structural Evaluation from 2000 Watts Decay Heat Upgrade [2.4]

This appendix presents a summary of the structural evaluation of the Model 2000 Radioactive Material Transport Package to carry materials or contents with a maximum decay heat of 2000 watts [2.3], excluding irradiated fuel, and its conformance with all applicable structural criteria. Normal and hypothetical accident condition evaluations are performed in accordance with 10CFR71 [2.1] requirements. The results of the engineering evaluations are presented to demonstrate the capability of the Model 2000 Transport Package to meet the regulatory requirement with the increased thermal loading of its contents under normal transport and hypothetical accident conditions.

The Model 2000 Transport Package has been previously certified by the Nuclear Regulatory Commission to carry up to 600 watts thermal loading of its contents. The report of the analyses is contained in the Safety Analysis Report for Model 2000 Radioactive Material Transport Package [2.3]. The results of the engineering evaluation shown in Tables 2.25 and 2.26 provide summaries of the Normal and Accident condition stresses in comparison with the allowable stress limit criteria specified by Regulatory Guide 7.6 [2.5]. Figure 2.21 identifies the location of the high stress elements on the LIBRA finite element model of the Model 2000 Cask. Furthermore, Tables 2.27 and 2.28 are provided as a comparison of the stresses between the 600 watt and 2000 watt thermal loading cases.

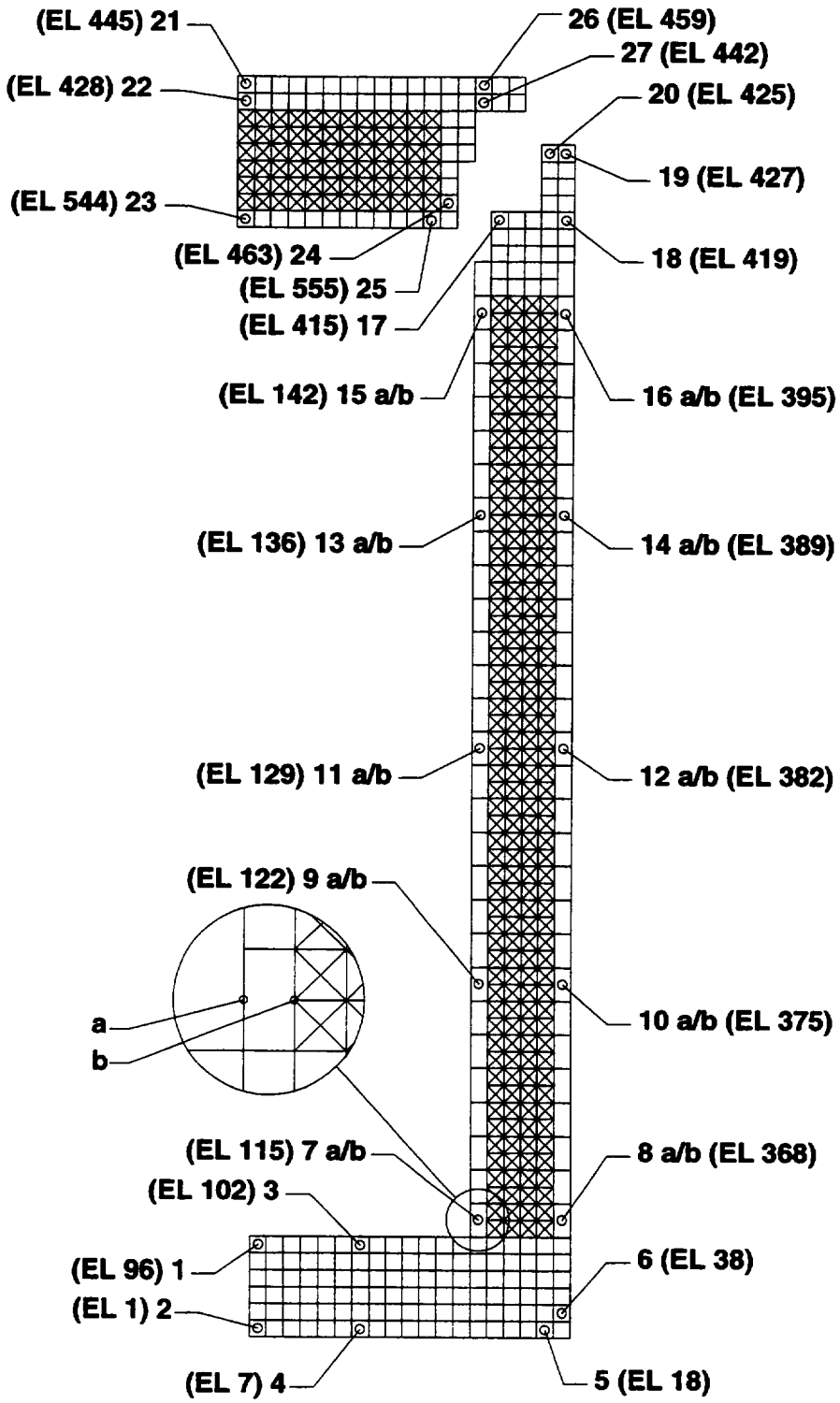

Figure 2.21. Stress Point Locations with Element Numbers

Table 2.25. Summary of Stresses, Normal Condition of Transport

Loading Condition	Max. Stress Location (2)		Temp (°F)	Stress Intensity Category and Criteria (ksi)						
				Q (3)	$P_m < S_m$		$P_m + P_b < 1.5\ S_m$		$P_m + P_b + Q < 3.0\ S_m$	
Hot Environment @100°F + Decay Heat	Inner Shell and BTM Forging Joint	7a	318	21.9	0.1	20.0	0.1	30.0	22.0	60.0
Cold Environment @ -40°F + Decay Heat	Inner Shell and BTM Forging Joint	7a	201	15.1	0.1	20.0	0.1	30.0	15.2	60.0
Cold Environment @ -40°F	Inner Shell and BTM Forging Joint	7a	-40	13.9	0.1	20.0	0.1	30.0	14.0	60.0
Min. Ext. Pressure @ 100°F + Decay Heat	Inner Shell and BTM Forging Joint	7a	318	21.9	0.1	20.0	0.2	30.0	22.1	60.0
Min. Ext. Pressure @ -20°F + Decay Heat	Inner Shell and BTM Forging Joint	7a	213	16.6	0.1	20.0	0.2	30.0	16.8	60.0
Increase Pressure @ 100°F + Decay Heat	Inner Shell and BTM Forging Joint	7a	318	21.9	0.1	20.0	0.1	30.0	21.9	60.0
Increase Pressure @ -20°F	Inner Shell and BTM Forging Joint	7a	-20	12.1	0.1	20.0	0.1	30.0	12.2	60.0
Increase Pressure @ -20°F + Decay Heat	Inner Shell and BTM Forging Joint	7a	213	16.6	0.1	20.0	0.1	30.0	16.6	60.0
Vibration and Shock @ 100°F + Decay Heat	Inner Shell and BTM Forging Joint	7a	318	21.9	0.7	20.0	0.5	30.0	22.4	60.0
Vibration and Shock @ -20°F + Decay Heat	Inner Shell and BTM Forging Joint	7a	213	16.6	0.7	20.0	0.5	30.0	17.1	60.0
Vibration and Shock @ -20°F	Inner Shell and BTM Forging Joint	7a	-20	12.1	0.7	20.0	0.5	30.0	12.6	60.0
Free Drop (Top) (4) @ 100°F + Decay Heat	Inner Shell and (5) BTM Forging Joint	7a	318	21.9	1.2	20.0	1.1	30.0	23.0	60.0
	Outer Shell and (6) Forging Joint	16b	316	2.59	6.9	20.0	11.9	30.0	14.5	60.0

Table 2.25. Summary of Stresses, Normal Condition of Transport (Continued)

Loading Condition	Max. Stress Location (2)		Temp (°F)	Stress Intensity Category and Criteria (ksi)						
				Q (3)	$P_m < S_m$		$P_m + P_b < 1.5\ S_m$		$P_m + P_b + Q < 3.0\ S_m$	
Free Drop (Top) (4) @ -20°F + Decay Heat	Inner Shell and (5) BTM Forging Joint	7a	215	16.6	1.2	20.0	1.1	30.0	17.7	60.0
	Outer Shell and (6) Forging Joint	16b	202	1.34	6.9	20.0	11.9	30.0	13.2	60.0
Free Drop (Top) (4) @ -20°F	Outer Shell and Forging Joint	16b	-20	1.43	6.9	20.0	11.9	30.0	13.3	60.0
Free Drop (Sd O°M) (4) @ 100°F + Decay Heat	Inner Shell and Top Forging Joint	15b	324	3.27	13.3	20.0	24.8	30.0	28.1	60.0
Free Drop (Sd O°M) (4) @ -20°F + Decay Heat	Inner Shell and Top Forging Joint	15b	211	9.33	13.3	20.0	24.8	30.0	34.1	60.0
Free Drop (Sd 5°M) (4) @ -20°F	Inner Shell and Top Forging Joint	15b	-20	4.89	13.3	20.0	24.8	30.0	29.7	60.0

Notes:
(1) Stresses for non-shell elements are provided in the LIBRA program at the centroid of the element membrane, and bending effects are combined in these values. Therefore, the same stress value is compared against both criteria, $P_m + P_b$.
(2) Refer to Figure 2.6 for locations.
(3) Pre-fabrication stresses are included in the inner shell stresses.
(4) Toroid with 0.76 in. thick wall.
(5) Maximum stresses for Pm+Pb+Q.
(6) Maximum stresses for Pm+Pb.

Table 2.26. Summary of Results for Accident Conditions

Loading Condition	Max. Stress Location (for Pm+Pb)		Temp (°F)	Stress Intensity Category and Criteria				
				Q	$P_m < 2.4\ S_m$	$0.7\ S_u$	$P_m + P_b < 3.6\ S_m$ or S_u	
30-ft Free Drop (Top) @ 100°F + Decay Heat	Outer shell upper region inner surface	14a	319	11.6	26.3	48.0	25.3	70.0
30-ft Free Drop (Top) @ -20°F + Decay Heat	Outer shell upper region inner surface	14a	204	1.9	26.3	48.0	25.3	70.0
30-ft Free Drop (Top) @ -20°F	Outer shell upper region inner surface	14a	-20	0.2	26.3	48.0	25.3	70.0
30-ft Free Drop (BTM) @ 100°F + Decay Heat	Outer shell lower section inner surface	10a	317	11.1	25.7	48.0	26.6	70.0
30-ft Free Drop (BTM) @ -20°F + Decay Heat	Outer shell lower section inner surface	10a	206	1.8	25.7	48.0	26.6	70.0
30-ft Free Drop (BTM) @ -20°F	Outer shell lower section inner surface	10a	-20	0.3	25.7	48.0	26.6	70.0
30-ft Free Drop (Side) @ 100°F + Decay Heat	Inner shell and upper forging joint	15b	324	3.3	18.8	48.0	35.4	70.0
30-ft Free Drop (Side) @ -20°F + Decay Heat	Inner shell and upper forging joint	15b	211	9.3	18.8	48.0	35.4	70.0
30-ft Free Drop (Side) @ -20°F	Inner shell and upper forging joint	15b	-20	4.9	18.8	48.0	35.4	70.0
30-ft Free Drop (CGOC) @ 100°F + Decay Heat	Cask top outer surface	19	304	2.9	9.49	48.0	9.49	70.0
30-ft Free Drop (CGOC) @ -20°F + Decay Heat	Cask top outer surface	19	8	3.4	9.49	48.0	9.49	70.0
30-ft Free Drop (CGOC) @ -20°F	Cask top outer surface	19	-20	0.1	9.49	48.0	9.49	70.0
Puncture @ 100°F + Decay Heat	Inner shell and upper forging joint	15b	324	3.3	18.8	48.0	35.4	70.0

Table 2.26. Summary of Results for Accident Conditions (Continued)

Loading Condition	Max. Stress Location (for Pm+Pb)		Temp (°F)	Stress Intensity Category and Criteria				
				Q	$P_m < 2.4\ S_m$	$0.7\ S_u$	$P_m + P_b < 3.6\ S_m$ or S_u	
Puncture @ -20°F + Decay Heat	Inner shell and upper forging joint	15b	211	9.3	18.8	48.0	35.4	70.0
Puncture @ -20°F	Inner shell and upper forging joint	15b	-20	4.9	18.8	48.0	35.4	70.0
Fire Accident t = 0.5 Hr.	Lid top flange BTM layer	22	322	0.2	0.2 (1)	48.0	0.2	70.0
Fire Accident t = 1.0 Hr.	Lid top flange BTM layer	22	326	1.2	0.2 (1)	48.0	0.2	70.0
Fire Accident t = 1.5 Hrs.	Lid top flange BTM layer	22	335	2.6	0.2 (1)	48.0	0.2	70.0
Fire Accident t = 2.0 Hrs.	Lid top flange BTM layer	22	348	2.2	0.2 (1)	48.0	0.2	70.0
Fire Accident t = 2.5 Hrs.	Lid top flange BTM layer	22	360	1.3	0.2 (1)	48.0	0.2	70.0
Fire Accident t = 3.0 Hrs.	Lid top flange BTM layer	22	369	0.7	0.2 (1)	48.0	0.2	70.0

Note: (1) Stresses are applied at the centroid of the element; therefore, the same stress value is used for P_m and P_m+P_b.

Table 2.27. Comparison of Maximum Stresses, 600W and 2000W Contents Heat Normal Conditions of Transport

Loading Condition	Max. Stress Location		Stresses (KSI)								
			P_m	Sm	$P_m + P_b$	1.5 Sm	Q		$P_m + P_b + Q$		3.0 Sm
							2000W	600W	2000W	600W	
Hot Environment @100°F + Decay Heat	Inner Shell and BTM Forging Joint	7a	0.1	20	0.1	30	21.9	12.1	22.0	12.2	60
Cold Environment @ -40°F + Decay Heat	Inner Shell and BTM Forging Joint	7a	0.1	20	0.1	30	15.1	8.7	15.2	8.8	60
Cold Environment @ -40°F	Inner Shell and BTM Forging Joint	7a	0.1	20	0.1	30	13.9	13.9	14.0	14.0	60
Min. Ext. Pressure @ 100°F + Decay Heat	Inner Shell and BTM Forging Joint	7a	0.1	20	0.2	30	21.9	12.1	22.1	12.3	60
Min. Ext. Pressure @ -20°F + Decay Heat	Inner Shell and BTM Forging Joint	7a	0.1	20	0.2	30	16.6	7.2	16.8	7.4	60
Increase Pressure @ 100°F + Decay Heat	Inner Shell and BTM Forging Joint	7a	0.1	20	0.1	30	21.9	12.1	21.9	12.2	60
Increase Pressure @ -20°F + Decay Heat	Inner Shell and BTM Forging Joint	7a	0.1	20	0.1	30	16.6	7.2	16.6	7.3	60
Vibration and Shock @ 100°F + Decay Heat	Inner Shell and BTM Forging Joint	7a	0.7	20	0.5	30	21.9	12.1	22.4	12.7	60
Vibration and Shock @ -20°F + Decay Heat	Inner Shell and BTM Forging Joint	7a	0.7	20	0.5	30	16.6	7.2	17.1	7.8	60
Vibration and Shock @ -20°F	Inner Shell and BTM Forging Joint	7a	0.7	20	0.5	30	12.1	12.1	12.6	12.6	60
Free Drop (Top) @ 100°F + Decay Heat	Inner Shell and BTM Forging Joint	7a	1.2	20	1.1	30	21.9	12.1	23.0	13.2	60
	Outer Shell and Forging Joint	16b	6.9	20	11.9	30	2.59	2.76	14.5	14.7	60
Free Drop (Top) @ -20°F + Decay Heat	Inner Shell and BTM Forging Joint	7a	1.2	20	1.1	30	16.6	12.1	17.7	13.2	60
	Outer Shell and Forging Joint	16b	6.9	20	11.9	30	1.34	0.88	13.2	12.8	60

Table 2.27. Comparison of Maximum Stresses, 600W and 2000W Contents Heat Normal Conditions of Transport (Continued)

Loading Condition	Max. Stress Location		Stresses (KSI)								
			P_m	Sm	$P_m + P_b$	1.5 Sm	Q		$P_m + P_b + Q$		3.0 Sm
							2000W	600W	2000W	600W	
Free Drop (Top) @ -20°F	Outer Shell and Forging Joint	16b	6.9	20	11.9	30	1.43	1.43	13.3	13.3	60
Free Drop (Sd 0°M) @ 100°F + Decay Heat	Inner Shell and Top Forging Joint	15a	13.3	20	24.8	30	3.27	3.34	28.1	28.1	60
Free Drop (Sd 0°M) @ -20°F + Decay Heat	Inner Shell and Top Forging Joint	15a	13.3	20	24.8	30	9.33	4.35	34.1	29.1	60
Free Drop (Sd 0°M) @ -20°F	Inner Shell and Top Forging Joint	15a	13.3	20	24.8	30	4.89	4.89	29.7	29.7	60

Table 2.28. Comparison of Stresses for 600 Watts Versus 2000 Watts Contents Heat Accident Conditions

Loading Condition	Max. Stress Location (for $P_m + P_b$)		Stress (KSI)					
			Q(1)		P_m	<2.4 Sm or <0.7 Su	$P_m + P_b$	<3.6 Sm or <Su
			2000w	600w				
30-ft Free Drop (Top)	Outer shell upper region	14a	11.6	7.3	26.3	48	25.3	70
30-ft Free Drop (Top)	Outer shell upper region	14a	1.9	0.4	26.3	48	25.3	70
30-ft Free Drop (Top)	Outer shell upper region	14a	0.2	0.2	26.3	48	25.3	70
30-ft Free Drop (BTM)	Outer shell lower section	10a	11.1	7.2	25.7	48	26.6	70
30-ft Free Drop (BTM)	Outer shell lower section	10a	1.8	0.4	25.7	48	26.6	70
30-ft Free Drop (BTM)	Outer shell lower section	10a	0.3	0.3	25.7	48	26.6	70
30-ft Free Drop (Side)	Inner shell and upper	15b	3.3	3.3	18.8	48	35.4	70
30-ft Free Drop (Side)	Inner shell and upper	15b	9.3	4.4	18.8	48	35.4	70
30-ft Free Drop (Side)	Inner shell and upper	15b	4.9	4.9	18.8	48	35.4	70
30-ft Free Drop (CGOC)	Cask top outer surface	19	2.9	0.9	9.49	48	9.49	70
30-ft Free Drop (CGOC)	Cask top outer surface	19	3.4	0.7	9.49	48	9.49	70
30-ft Free Drop (CGOC)	Cask top outer surface	19	0.1	0.1	9.49	48	9.49	70
Puncture	Inner shell and upper	15b	3.3	3.3	18.8	48	35.4	70
Puncture	Inner shell and upper	15b	9.3	4.4	18.8	48	35.4	70
Puncture	Inner shell and upper	15b	4.9	4.9	18.8	48	35.4	70
Fire Accident	Lid top flange	22	0.2	0.7	0.2	48	0.2	70
Fire Accident	Lid top flange	22	1.2	1.9	0.2	48	0.2	70
Fire Accident	Lid top flange	22	2.6	2.2	0.2	48	0.2	70
Fire Accident	Lid top flange	22	2.2	2.0	0.2	48	0.2	70
Fire Accident	Lid top flange	22	1.3	2.0	0.2	48	0.2	70
Fire Accident	Lid top flange	22	0.7	1.9	0.2	48	0.2	70

Notes: (1) The thermal stresses are at the location corresponding to the maximum $P_m + P_b$.

2.11.3 Stress-Concentration Factors for Inclusion of Divider Wall Slots

Since the complete finite element model of the MTR-type divider used in the structural and thermal analyses ignored the inclusion of the slots in the divider walls, it is desired to evaluate a load factor which can be applied to the model stresses to compensate. This is accomplished by considering two effects.

The first considers the general effect of the reduction in material and the change in geometry of the individual divider walls. A very detailed finite element model is generated of a single divider wall both with and without the slot included. A scaling factor is determined from the increase in stress intensity due to the inclusion of the slot.

The second effect is the stress-concentration factor resulting from the notch radius in the corners of the slot. An analysis is performed to evaluate this factor.

The total load factor is then defined as the product of the scaling factor due the reduction in material and the stress-concentration factor due to the notch in the corners of the slot.

2.11.3.1 Finite Element Analysis of Fuel Divider Slot Region

The region in which the fuel divider wall is taken is illustrated in Figure 2.22. It is assumed that the planes parallel to the lines a-a and b-b remain in their respective planes throughout the loading. An arbitrary load is distributed across the entire surface of the divider in contact with the fuel.

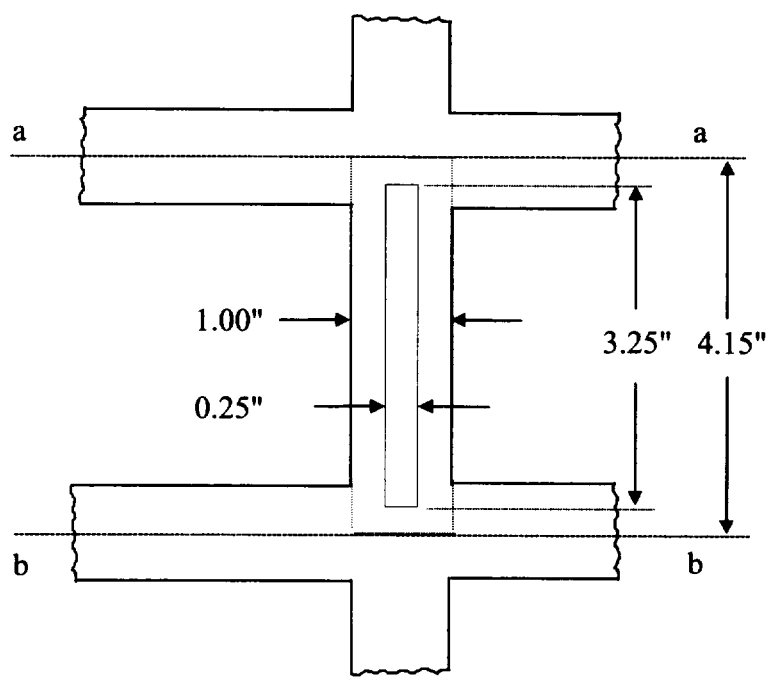

Figure 2.22. Region of Detailed Divider Wall Finite Element Model

Figures 2.23 and 2.24 show the contour plots of the case with and without the slots, respectively. The applied boundary and loading conditions are shown on the plots. Both cases are configured with identical loading and boundary conditions. Element type STIF10N is once again used as was the case with the complete structural model.

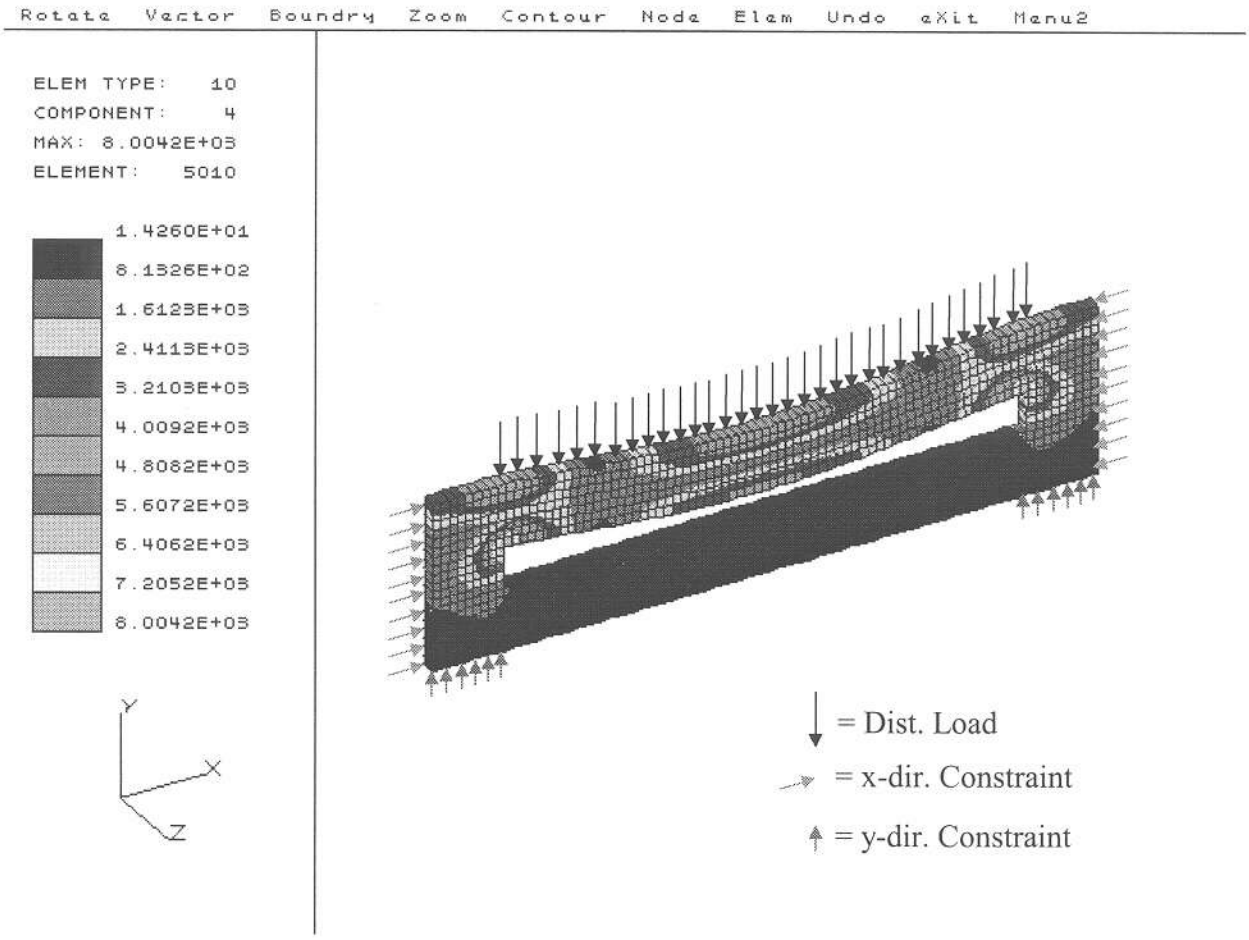

Figure 2.23. Detailed Fuel Divider Model with Slot

C05

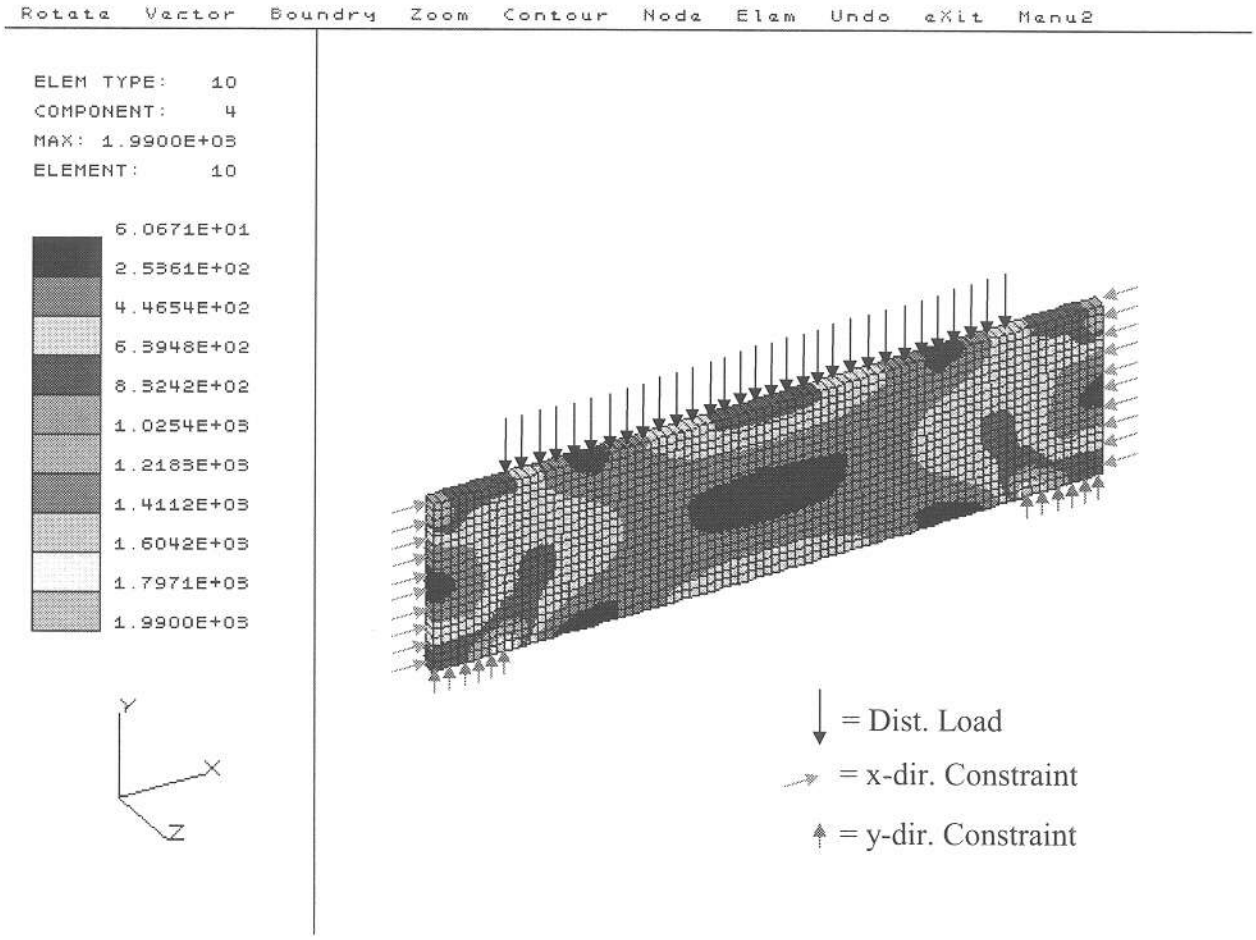

Figure 2.24. Detailed Fuel Divider Model without Slot

The analysis shows that the two cases produce a noticeable difference in stress distribution though the divider wall. The scaling factor based on the difference in geometry is taken to be the ratio of the maximum stress intensity observed in the two cases, which is evaluated as 4.0.

It is noted that the model shown in Figure 2.23 is conservative by neglecting any support provided by the borated aluminum sheet that will be inserted into the slot. The modeled configuration only allows the side of the slot in contact with the fuel to carry the load, when in reality the boral sheet would distribute some of the load to member on the wall opposite to the side in contact with the fuel.

C06

2.11.3.2 Stress Concentration Factor Due to Notch Radius

The finite element model previously shown, however detailed, is not capable of predicting stress concentrations resulting from sharp discontinuities as a function of notch radius. The following analysis is performed the determine the appropriate scaling factor resulting from this effect.

It is assumed that

$$\sigma_{\max} = K_f \sigma_o ,$$

where K_f is the fatigue stress-concentration factor, and σ_o is the nominal stress. The fatigue stress-concentration factor is provided by

$$K_f = 1 + q(K_t - 1),$$

where q represents the notch sensitivity of the material, and K_t is the stress-concentration factor based on the geometry. Figure 2.25 illustrates the geometry considered.

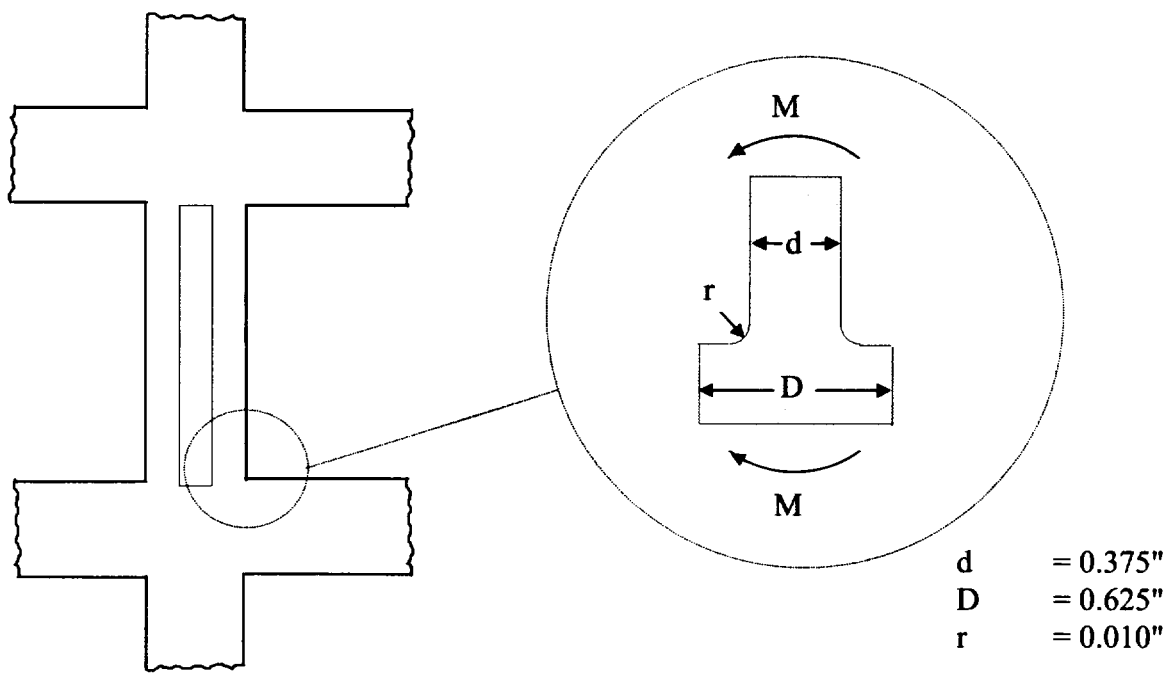

Figure 2.25. Geometry for Stress-Concentration Based on Notch Radius

Using r/d = 0.026 and D/d = 1.67, the stress-concentration factor based on geometry (K_t) provided by Reference [2.10, Figure A-15-6] is approximately 3.0.

The notch sensitivity (q) provided by Reference [2.10, Figure 5-16] was found to be approximately 0.5, for steels subjected to reversed bending or reversed axial loading.

The fatigue stress-concentration factor is then calculated as

$$K_f = 1 + 0.5(3 - 1) = 2 .$$

2.11.3.3 Total Stress-Concentration Factor Due to Inclusion of Divider Wall Slots

Based on the finite element models of the detailed region of the slot in the divider wall, it has been shown that a scaling factor of 4 is required to be used to account for the difference in geometry. Combining this value with the fatigue stress-concentration factor of 2 yields a total load factor of 8.

All elements used in the complete structural finite element model in the locations containing the included slots will have the stresses scaled by a factor of 8.

2.11.4 Fatigue Evaluation

The cycling stresses of the Transportation Package are caused by the shock and vibration during transportation and cyclic thermal stresses. The fatigue damage is not much of a concern because of low stresses for shock and vibration condition, and because of small number of cycles for the thermal stresses condition.

For the steel used, the allowable value Sa = 28 ksi for 10^6 cycles, based on Reference [2.7], Appendix I, Figure I-9.2.2, Curve C. Examination of the stress intensities in Tables 2.7 and 2.8, which include secondary and thermal effects ($P_m + P_b + Q$), indicates that $S_{alt} < Sa$, i.e., fatigue usage U = 0.01 and hence there would be no fatigue problem.

2.11.4.1 Upper Bound on Fatigue Usage Factor

There are two basic classes of stress cycles applicable to the structure: 1) mechanical shock and vibration, and 2) thermal stress cycles. While the latter, (2) has a stress range that exceeds that of the former, (1), the stress cycles of (1) occur at a rate which far exceed the rate for (2) — the fundamental period of vibration is 0.00348 seconds (corresponding to the fundamental frequency 287 Hz as discussed in Paragraph 2.11.4.2) and the shortest period of a thermal cycle is on the order of 24 hours, yielding the ratio of $\sim 25 \cdot 10^6$ for the cycling ratio between the two. This means that the cycling of (1) occurs at a mean stress level which is provided by (2) and varying very slowly. For this reason, Curve C of Appendix I, Figure I-9.22, of Reference [2.7] which includes the maximum mean stress effect, is conservatively used for shock and vibration.

2.11.4.2 Shock and Vibration

Referring to Table 2.8 for the shock and vibration condition, the highest stress occurs at lower surface in a fuel divider wall in element 69. The stress amplitude is calculated using a stress concentration factor of 8 and adjusting for the elastic modulus according to Subsection NG of the ASME code [2.5],

$$Sa,tr = (1.71\ ksi)\cdot(28.3x10^6\ ksi\ /\ 27.6x10^6\ ksi) = 1.75\ ksi$$

It is noted that the stress value taken from Table 2.8 already includes the stress-concentration factor of 8, as was determined previously in Subsection 2.11.2.

This results in approximately $2.5x10^{12}$ cycles, extrapolated from Curve C of, Figure I-9.22.

The number of stress cycles during transportation is estimated for the service life of 100 years, assuming that conservatively, there are yearly 12 round trips of 10 hours duration each way and using the fundamental frequency of 287, as

$$Ntr = (287\ cycles/sec)\cdot(12\cdot2\cdot10\cdot3600\ sec)\cdot100\ years = 2.5\cdot10^{10}\ total\ cycles$$

The fatigue usage factor calculated for normal transport conditions is found to be:

$$Utr < 2.5x10^{10}\ /\ 2.5x10^{12} = +0.01$$

2.11.5 Structural Analysis of Cask Support Plate Option 2 (Tungsten Plate Insert)

The Cask Support Plate Design Option 2 (GE Drawings 105E9521 and 101E8719) specifies a 27-inch diameter, 1/2-inch-thick tungsten alloy insert within the 42-inch diameter, 1/2-inch-thick stainless steel Cask Support Plate. This optional insert provides additional shielding for cask bottom, as discussed in Section 5.

Material properties of the tungsten alloy are listed in Table 2.29.

The maximum bearing stress on the tungsten alloy insert is limited to the crush strength of the Bottom Energy Absorber, immediately below the Cask Support Plate. The Bottom Energy Absorber crush strength is equal to 750 psi ±10%, or a maximum of 825 psi. This value is well below the 85 ksi minimum yield strength of the tungsten alloy. Hence, bearing stresses on the tungsten alloy insert are negligible.

Table 2.29. Material Properties of Tungsten Alloy

Minimum Density [g/cc]	17.75
% Tungsten Content	95
Maximum Hardness Rc	34
Min Ultimate Tensile Strength [kpsi]	120
Min 0.2% Offset Yield Strength [kpsi]	85
Minimum % Elongation (1" Gage Length)	3

2.11.6 Variation of Wall Thickness on the TSR Fuel Basket Outer Shell (As Built Conditions)

Two approaches are taken to evaluate the impact of this variation of wall thickness on the TSR Fuels basket outer shells. The first approach establishes the value of stresses on the shell due to regulatory normal condition (P_m and $P_m + P_b$), as if the entire shell has a thickness of 0.271 inches. These stresses are compared to the allowable stresses. The second approach consists of statistical analysis to show, with 99% confidence, that the mean of the wall thickness measurements, a total of 32 points, is not significantly different from the nominal value of the shell. In addition, it also establishes that measured points are within two standard deviations of the mean, with only one outlier point. However, the outlier point is well within three standard deviations of the mean. The stress analysis shows that the resulting stresses are within the allowable stresses. Statistically, there is not a major significant effect on the design, because of the variation of shell wall thickness.

2.11.6.1 Structural Analysis — Reduction of Wall Thickness Effect on Outer Shell Stresses

Compressive Stress:

The compressive stress in the outer cylinder wall is expressed by:

$$\sigma_c = \frac{Wg}{A},$$

where: W = total weight = 1368 lbs

g = vertical acceleration = 69 and 133 for normal and accident conditions, respectively

A = cross-sectional area = $\pi(R_o^2 - r_i^2) = 22.13\ in^2$

The compressive stress (σ_c) in the outer cylinder wall is found to be 4.26 ksi for the normal condition, and 8.23 ksi for the accident condition. The critical buckling stress is 24.983[1] ksi; therefore, no buckling failure will occur.

The LIBRA finite element model was run using the normal condition inputs (69 g). Membrane stress (Pm) was determined as the average of the inner and outer surface maximum principal stresses. The membrane plus bending (Pm + Pb) was determined as the maximum observed principal stress at the shell surface.

Accident condition stresses were evaluated by scaling the normal condition stresses by the ratio of the g loads (i.e., scaling factor = 133 g / 69 g = 1.928.

The resulting maximum stress was found to be:

Normal Condition:	Pm	< Sm	Pm + Pb	< 1.5 Sm
	6.3 ksi	18.7 ksi	13.5 ksi	28.08 ksi
Accident Condition:	Pm	<.7 Su	Pm + Pb	< Su
	12.1 ksi	42.0 ksi	26.0 ksi	60.0 ksi

As shown in the above tabulation, all resulting stresses are below their allowable stresses.

1. Shigley, J.E. and Mischke, C.R., "Mechanical Engineering Design", 5th Ed., McGraw- Hill, New York, 1989.

2.11.6.1.1 Libra Input Data File

```
LINK STIF3Z
TI   TSR FUEL BASKET ANALYSIS
TI   BENDING OF OUTER SHELL (Normal Conditions 69g, Props @200F)
Mc   1,3
OPTION NO_SING
LC   1,2,,  0,0,0  1,0,0  0,1,0
CS   1
G2
     10,50,1,1,3,1,3,1
     13,0,0    13,45.65,0
     13,45.65,24, 13,0,24
     1,1,1,1
*PR   1,   101,0.375,1
PR   1,   101,0.271,1
PR   101, 27.6E6,0.3, 8.79E-6,0.28
BC   1,50,10,   123,0.0
,    2,9,1,      123,0.0
,    10,50,10,    26,0.0
CS   1
*** Use 1/2 load since symmetric model[1/2(69g*48.5lb/50nodes)
LD   10,50,10    33.465
CS   0
BF   69,69,69
CC  1 0 0 0 1
END
```

2.11.6.1.2 Libra Output for Element 881, Max Stressed Element

EL	TYPE	PT		σ(1)	σ(2)	τ	σ(eqv)
881	3	AVE	TOP	.1353E+05	.1180E+04	.6176E+04	.1298E+05
			MID	.1771E+04	.5963E+02	.8559E+03	.1742E+04
			BOT	-.9296E+03	-.1012E+05	.4595E+04	.9689E+04

Pm + Pb = 13.5 ksi
Pm = 0.5 * (13.5 - 0.9) = 6.3 ksi

2.11.6.2 Statistical Analysis

9/11/98 08:35

Normal Curve generated for Layer 1

Mean	sd	Area
0.37928	0.040897	0.64000

9/11/98 08:38

One population t-Test on AlIData col(A):

Data	Mean	Variance	N
A	0.37928	0.00167	32

t = 0.59219
p = 0.55802

At the 0.05 level (95% Confidence Level),
the two means are NOT significantly different.

9/11/98 08:51

One population t-Test on AllData col(A):

Data	Mean	Variance	N
A	0.37928	0.00167	32

t = 0.59219
p = 0.55802

At the 0.01 level (99% Confidence Level),
the two means are NOT significantly different.

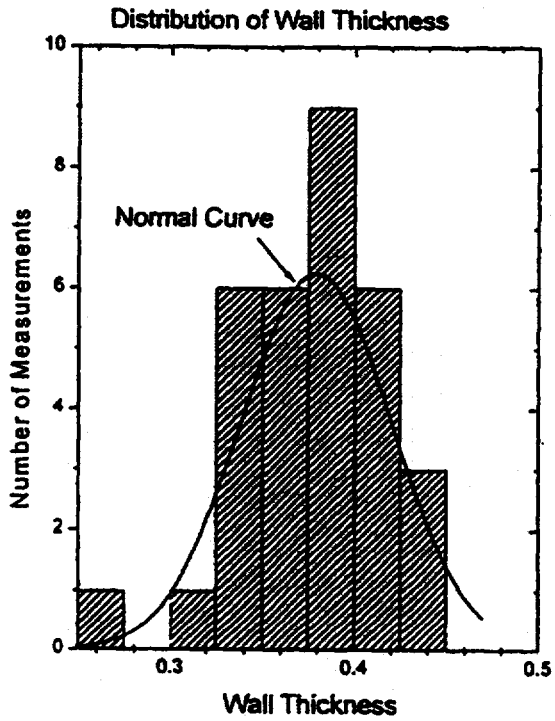

	Col(X)	Mean(Y)	sd(yEr±)	se(yEr±)	Sum	N
1	A	0.37928	0.0409	0.00723	12.137	32

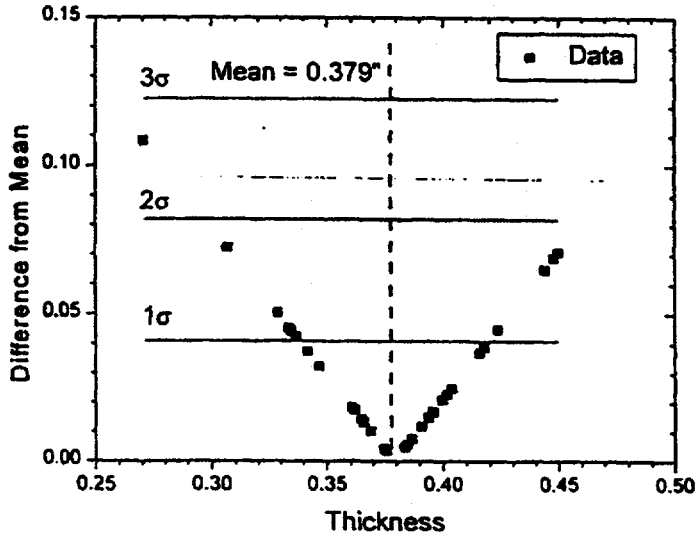

Figure 2.26. Wall Thickness

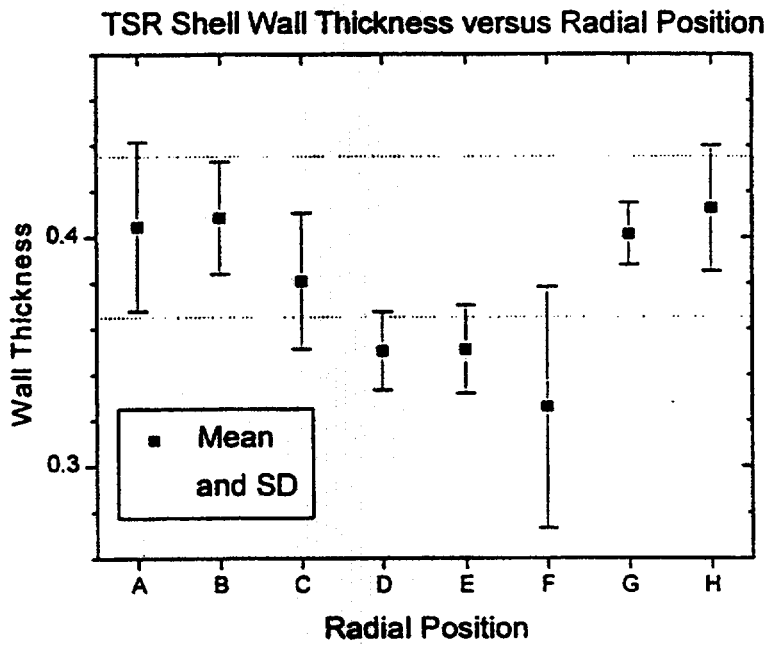

Figure 2.27. TSR Shell Wall Thickness Versus Radial Position

3. THERMAL EVALUATION

The thermal analyses of the Model 2000 Transport Package with the MTR-type fuel are described in this Chapter, with the thermal analysis of the TSR Fuel Basket included as Appendix 3.7.2 and the TRIGA-type fuel thermal evaluation presented in Appendix 3.7.5.

The design basis of the MTR-type fuel elements have a maximum decay heat of 1500 watts per shipment. This total decay heat per shipment is evaluated in three separate cases: one general case included in the main body of this Chapter, and two limiting cases presented in Appendix 3.7.4. Case 1 assumes that the 1500 watts of decay heat is distributed evenly among all 21 fuel cells or positions of the divider (71.4 watts) and along its entire length. Cases 2 and 3 consider an uneven distribution of the total decay heat among the divider inner and outer fuel cells as well as the upper and lower region of the fuel cell length. See Figure 3.0. Specifically, Case 2 considers a maximum of 35 watts in each the of the 21 upper region fuel cells and a maximum of 85 watts in each of the 9 lower region inner cells. While Case 3 considers a maximum of 85 watts in each of the 9 lower region inner cell and a maximum of 85 watts in any 9 of the lower region outer cells.

The thermal analyses assume that the cask cavity is dry and has one atmosphere of helium, which is the normal shipping mode. An additional thermal analysis is presented in Appendix 3.7.3 which assumes that the helium within the cask cavity has been replaced with air. These analyses demonstrate that the Model 2000 Transport Package with the MTR-type generic fuel positioned in the divider provides suitable heat dissipation to maintain the temperature distribution of the Package within the limits established in the Package's Safety Analysis Report [3.1]. The MTR-type generic fuel characteristics represent an upper limit of the MTR-type fuels planned to transport in the Model 2000 package. All thermal conditions are analyzed using the finite element computer code LIBRA under normal and accident conditions. Subsection 3.6.1 of Reference [3.1] includes the qualification and verification program performed to support the use of the LIBRA Code.

The thermal evaluation of the TRIGA-type fuel consists in calculating the temperature of the fuel element clad in an array of four (4) and twenty (20) fuel elements inside the divider fuel cell. The evaluation is performed by looking at three cases. Case I addresses the aluminum clad fuel element, four fuel elements per divider fuel cell, and a maximum decay heat of 30 watts per cell for a total decay heat per shipment of 630 watts. Case II covers the stainless steel clad fuel element in a four elements array, with 85 watts of decay heat per divider fuel cell, and a maximum of 1500 watts per shipment. Case III is the same as Case II but the fuel elements are placed in the divider fuel cell in an array of twenty.

3.1 DISCUSSION

The principal design operating and performance characteristics of the Model 2000 Transport Package with the MTR-type fuel with 1500 watts of decay heat are within the limits previously established. The performance of the Package components are not affected by either the use of the MTR-type fuel divider or the TSR fuel basket.

3.1.1 Thermal Design Criteria

The maximum fuel cladding temperature for the design basis of the MTR-type fuel is 400°F for normal contions. At this temperature, the mechanical material properties of the aluminum are significantly changed. However, the divider or basket designs provide additional structural support to the MTR-type fuel under the regulatory-prescribed loadings during transport. The design pressure of the Model 2000 Cask is 30 psia. Temperature limits are:

For the cask seal area [3.1]	≤ 400°F	
Within the lead regions [3.1]	≤ 600°F	
Cask cavity [3.1]	≤ 600°F	
Exterior Package surface under shade [3.1]	≤ 180°F	
MTR-type Fuel Element	≤ 400°F	Normal Conditions
MTR-type Fuel Element	≤ 430°F	Accident Conditions

3.1.2 Design Bases Conditions

Temperature distributions in the Model 2000 Transport Package with the MTR-type fuel divider are evaluated for the following thermal environments:

1. Normal Operating Condition

   a) 100°F ambient temperature with maximum decay heat
   b) 100°F ambient temperature with maximum decay heat and insulation
   c) -20°F ambient temperature with maximum decay heat
   d) -40°F ambient temperature with maximum decay heat

2. Thermal Fire Accident

   a) 30 minutes after start of fire
   b) Post fire steady-state

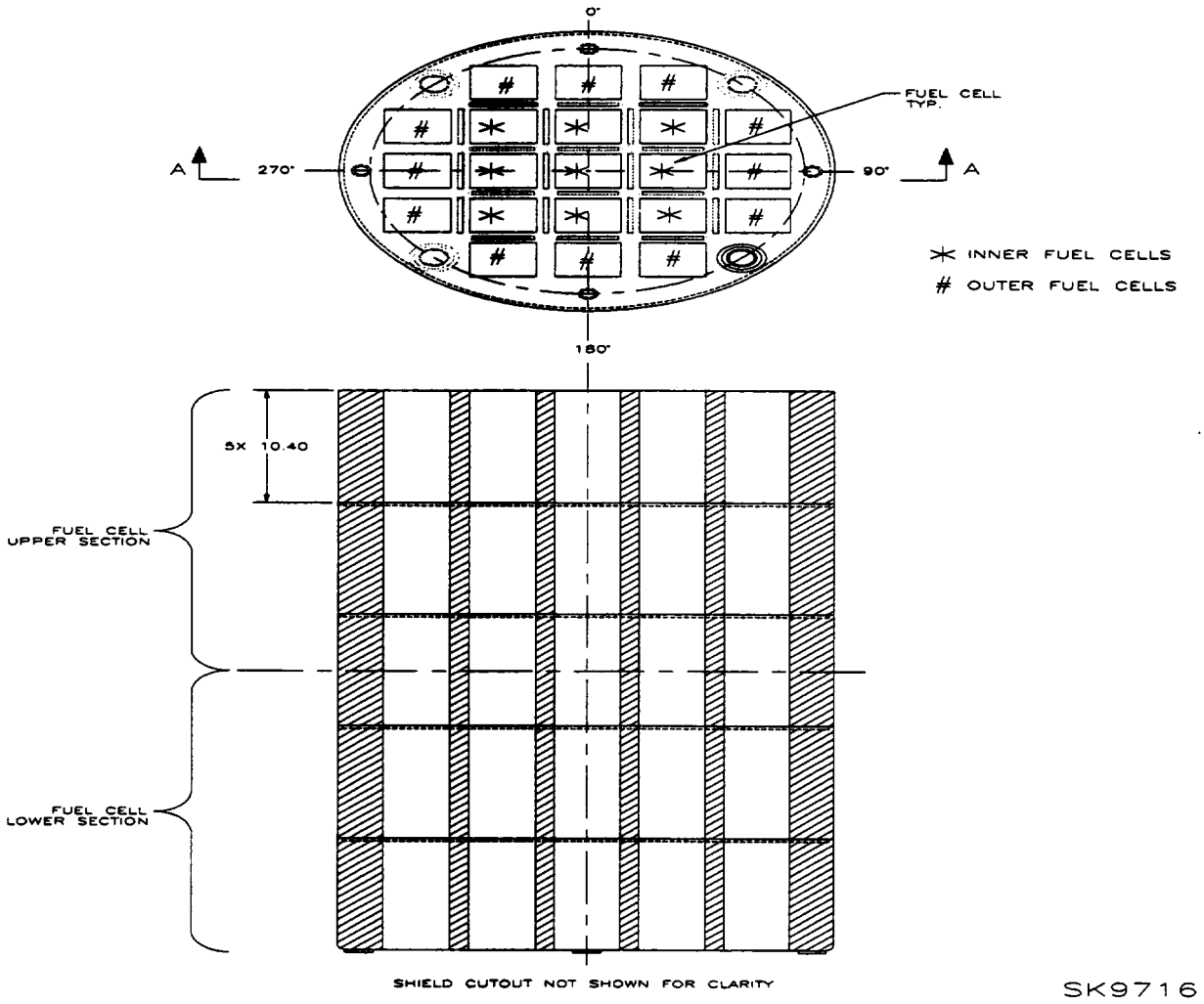

Figure 3. Zero (0) MTR-Type Fuel Divider

3.1.3 Results of Design Basis Thermal Analyses

The analytical results obtained from evaluating the design basis conditions for the MTR-type fuel with 1500 watts of decay heat in the Model 2000 package are summarized in Tables 3.1, 3.1A, and 3.1B for Case 1, Case 2, and Case 3, respectively. Case 1 assumes that the 1500 watts of decay heat is distributed evenly among all 21 fuel cells or positions of the divider (71.4 watts) and along its entire length. Case 2 considers a maximum of 35 watts in each the of the 21 upper region fuel cells and a maximum of 85 watts in each of the 9 lower region inner cells. Case 3 considers a maximum of 85 watts in each of the 9 lower region inner cells and a maximum of 85 watts in any 9 lower region outer cells. The evaluation results are based on the use of the thermal analysis modules of the LIBRA Code. The design cases 1(b) and 1(c) in Subsection 3.1.2 are not included in the table, since the package is assumed to be at uniform ambient temperatures at these conditions.

Table 3.1. Summary of Temperatures — Case 1, MTR-Type Fuel

Package Component	Design BasisThermal Condition Temperatures (°F)						Component Criteria (°F)
	1.a	1.b	1.c	1.d	2.a	2.b[1]	
Cask Cavity Surface	261	304	141	121	305	380	T ≤ 600
Lead Shield	259	302	139	119	304	374	T ≤ 600
Cask Seal Area	238	285	118	98	289	350	T ≤ 400
Cask Test Port	236	283	116	96	310	347	T ≤ 400
Cask Drain Port	233	272	113	93	336	365	T ≤ 400
Cask Vent Port	242	289	122	102	290	336	T ≤ 400
Cask Outer Surface	242	288	122	102	337	403	N/A
Overpack Inner Surface	185	240	65	45	828	837	N/A
Overpack Accessible Outer Surface	130	187	7	-13	1217	1340	T ≤ 180 for 1(a)
MTR-Type Fuel Element (Helium)	298	340	180	160	333	402[2]	T ≤ 400 normal conditions T ≤ 430 accident conditions
Divider (Helium)	298	340	180	160	333	402[2]	T ≤ 400 normal conditions T ≤ 430 accident conditions
MTR-type Fuel Element (Air)	347	380	(4)	(4)	347	406[3]	T ≤ 400 normal conditions T ≤ 430 accident conditions
Divider (Air)	347	380	(4)	(4)	347	406[3]	T ≤ 400 normal conditions T ≤ 430 accident conditions

Notes: (1) Values provided are maximum temperatures obtained for each component during the fire transient and cooling down period.

(2) Maximum temperature occur at 3 hrs.

(3) Maximum temperature occur at 20 hrs.

(4) Design basis 1.c and 1.d were not performed for the air-filled cask analysis because these cases were found to be well below the component criteria in the helium-filled cask analysis.

Table 3.1A. Summary of Temperatures — Case 2 MTR-Type Fuel

Package Component	Design BasisThermal Condition Temperatures (°F)						Component Criteria (°F)
	1.a	1.b	1.c[1]	1.d[1]	2.a	2.b[2]	
Cask Cavity Surface	266	303			268	350	T ≤ 600
Lead Shield	265	302			266	344	T ≤ 600
Cask Seal Area	242	283			246	312	T ≤ 400
Cask Test Port	240	281			267	312	T ≤ 400
Cask Drain Port	240	273			302	328	T ≤ 400
Cask Vent Port	247	287			248	312	T ≤ 400
Cask Outer Surface	250	288			290	335	N/A
Overpack Inner Surface							N/A
Overpack Accessible Outer Surface	136	189			1335	217	T ≤ 180 for 1(a)
MTR-type Fuel Element (Air)	361	394			361	419[3]	T ≤ 400 normal conditions T ≤ 430 accident conditions
Divider (Air)	350	383			350	408[3]	T ≤ 400 normal conditions T ≤ 430 accident conditions

Notes: (1) Design basis 1.c and 1.d were not performed because these cases were found to be well below the component criteria in the helium-filled cask analysis.

(2) Values provided are maximum temperatures obtained for each component during the fire transient and cooling down period.

(3) Maximum temperature occur at 21 hrs.

Table 3.1B. Summary of Temperatures — Case 3 MTR-Type Fuel

Package Component	Design BasisThermal Condition Temperatures (°F)						Component Criteria (°F)
	1.a	1.b	1.c[1]	1.d	2.a	2.b[2]	
Cask Cavity Surface	259	296			260	338	T ≤ 600
Lead Shield	259	294			261	338	T ≤ 600
Cask Seal Area	220	262			224	288	T ≤ 400
Cask Test Port	218	260			245	289	T ≤ 400
Cask Drain Port	260	293			321	347	T ≤ 400
Cask Vent Port	224	266			226	286	T ≤ 400
Cask Outer Surface	245	284			285	332	N/A
Overpack Inner Surface							N/A
Overpack Accessible Outer Surface	130	188			1334	221	T ≤ 180 for 1(a)
MTR-type Fuel Element (Air)	358	390			358	422[3]	T ≤ 400 normal conditions T ≤ 430 accident conditions
Divider (Air)	345	378			345	410[3]	T ≤ 400 normal conditions T ≤ 430 accident conditions

Notes (1) Design basis 1.c and 1.d were not performed because these cases were found to be well below the component criteria in the helium-filled cask analysis.

(2) Values provided are maximum temperatures obtained for each component during the fire transient and cooling down period.

(3) Maximum temperature occur at 14 hrs.

Table 3.1C. Summary of Temperatures — Case I TRIGA Fuel, 1.475 Inch Diameter, Al Clad

Package Component	Design BasisThermal Condition Temperatures (°F)						Component Criteria (°F)
	1.a	1.b	1.c(1)	1.d	2.a	2.b(2)	
Cask Cavity Surface		223			226	270	T ≤ 600
Lead Shield		223			227	270	T ≤ 600
Cask Seal Area		216			218	255	T ≤ 400
Cask Test Port		210			230	259	T ≤ 400
Cask Drain Port		217			268	294	T ≤ 400
Cask Vent Port		218			219	247	T ≤ 400
Cask Outer Surface		222			240	273	N/A
Overpack Inner Surface		190			766	340	N/A
Overpack Accessible Outer Surface		171			1326	253	T ≤ 180 for 1(a)
TRIGAtype Fuel Element (Al clad in Air Enviroment)		265			(4)	(4)	T ≤ 400 normal conditions T ≤ 430 accident conditions
Divider (Air)		248			(4)	(4)	T ≤ 400 normal conditions T ≤ 430 accident conditions

Notes: (1)Design basis 1.a, 1.c and 1.d were not performed because these cases were found to be well below the component criteria in Table 3.1.

(2) Values provided are maximum temperatures obtained for each component during the fire transient and cooling down period.

(3) Values provided are maximum temperatures obtained for each component during the transient condition.

(4) Analysis was not performed because results expected to be well within the criteria, based on the temperature difference shown for the cask cavity.

Table 3.1D. Summary of Temperatures — TRIGA Fuel, Case II, 1.475 Inch Diameter, Stainless Steel Clad

Package Component	Design BasisThermal Condition Temperatures (°F)						Component Criteria (°F)
	1.a	1.b	1.c[1]	1.d[1]	2.a	2.b[2]	
Cask Cavity Surface	266	303			268	350	T ≤ 600
Lead Shield	265	302			266	344	T ≤ 600
Cask Seal Area	242	283			246	312	T ≤ 400
Cask Test Port	240	281			267	312	T ≤ 400
Cask Drain Port	240	273			302	328	T ≤ 400
Cask Vent Port	247	287			248	312	T ≤ 400
Cask Outer Surface	250	288			290	335	N/A
Overpack Inner Surface							N/A
Overpack Accessible Outer Surface	136	189			1335	217	T ≤ 180 for 1(a)
MTR-type Fuel Element (Air)		431			(4)	(4)	T ≤ 600 normal conditions T ≤ 600 accident conditions
Divider (Air)		383			(4)	(4)	T ≤ 600 normal conditions T ≤ 600 accident conditions

Notes: (1) Design basis 1.c and 1.d were not performed because these cases were found to be well below the component criteria in the helium-filled cask analysis.

(2) Values provided are maximum temperatures obtained for each component during the fire transient and cooling down period.

(3) Maximum temperature occur at 21 hrs.

(4) Analysis was not performed because results expected to be well within the criteria, based on the temperature difference shown for the cask cavity.

Table 3.1E. Summary of Temperatures — TRIGA Fuel, Case III, 0.542 Inch Diameter, Incoloy Clad

Package Component	Design BasisThermal Condition Temperatures (°F)						Component Criteria (°F)
	1.a	1.b	1.c(1)	1.d(1)	2.a	2.b(2)	
Cask Cavity Surface	266	303			268	350	T ≤ 600
Lead Shield	265	302			266	344	T ≤ 600
Cask Seal Area	242	283			246	312	T ≤ 400
Cask Test Port	240	281			267	312	T ≤ 400
Cask Drain Port	240	273			302	328	T ≤ 400
Cask Vent Port	247	287			248	312	T ≤ 400
Cask Outer Surface	250	288			290	335	N/A
Overpack Inner Surface							N/A
Overpack Accessible Outer Surface	136	189			1335	217	T ≤ 180 for 1(a)
MTR-type Fuel Element (Air)		438			(4)	(4)	T ≤ 600 normal conditions T ≤ 600 accident conditions
Divider (Air)		383			(4)	(4)	T ≤ 600 normal conditions T ≤ 600 accident conditions

Notes: (1) Design basis 1.c and 1.d were not performed because these cases were found to be well below the component criteria in the helium-filled cask analysis.

(2) Values provided are maximum temperatures obtained for each component during the fire transient and cooling down period.

(3) Maximum temperature occur at 21 hrs.

(4) Analysis was not performed because results expected to be well within the criteria, based on the temperature difference shown for the cask cavity.

3.2 SUMMARY OF THERMAL PROPERTIES OF MATERIALS

The transport Package model consists of six materials whose thermal properties are listed in subsections 3.2.1 to 3.2.6. The curve fit functions that provide the variation of the properties with temperature are also provided. These property functions are used in the transient analysis to update the material properties as the temperature changes.

3.2.1 Lead

Table 3.2. Lead Thermophysical Properties

Temp (°F)	Thermophysical Properties		
	k (Btu/hr-ft-°F)[3.2]	Cp(Btu/lb-°F) [3.3]	ρ(lb/in.^{3}) [3.4]
68.0	—	0.0305	0.4097
80.3	20.3	—	
158.0	—	0.0310	
170.3	20.1		
248.0	—	0.0316	
260.3	19.5		
338.0	—	0.0320	
428.0	—	0.0325	
440.3	18.8		
500.0	—	0.0329	
608.0	—	0.0334	
620.3	18.0	—	

Conductivity, k (Btu/hr-in.-°F)

$$k(T) = 1.7263 - 3.6418 \times 10\text{-}4\ T \qquad 68.0°F < T < 620.3°F$$

Specific Heat, Cp (Btu/lb-°F)

$$Cp(T) = 3.0177 \times 10^{-2} + 5.3924 \times 10^{-6}\ T \qquad 68.0°F < T < 620.3°F$$

Density, ρ (lb/in.3)

$$\rho(T) = 0.41 \qquad 68.0°F < T < 620.3°F$$

3.2.2 Stainless Steel (304 Type)

Table 3.3. Stainless Steel (Type 304) Thermophysical Properties

Thermophysical Properties[3.5]		
Temp (°F)	**k(Btu/hr-ft-°F)**	**α(ft²/hr)**
70	8.6	0.151
100	8.7	0.152
200	9.3	0.156
300	9.8	0.160
400	10.4	0.165
500	10.9	0.170
600	11.3	0.174
700	11.8	0.179
800	12.2	0.184
900	12.7	0.189
1,000	13.2	0.194
1,100	13.6	0.198
1,200	14.0	0.203
1,300	14.5	0.208
1,400	14.9	0.212
1,500	15.3	0.216

Conductivity, k (Btu/hr-in.-°F)

$$k(T) = 7.0287 \times 10^{-1} + 3.8987 \times 10^{-4}\ T \qquad 70°F < T < 1500°F$$

Thermal Diffusivity, a (in.^{2}/hr)

$$\alpha(T) = 21.110 + 6.7346 \times 10^{-3}\ T \qquad 70°F < T < 1500°F$$

Density, ρ(lb/in.^{3})

$$\rho(T) = 0.29 \qquad 70°F < T < 1000°F$$

Specific Heat, Cp (Btu/lb-°F)

$$Cp(T) = k(T)/a(T)(\rho) = k(T)/(6.1219 + 1.953 \times 10^{-3}\ T) \qquad 70°F < T < 1000°F$$

3.2.3 Air

Table 3.4. Thermophysical Properties of Air

Temp (°F)	Thermophysical Properties[3.6]					
	ρ (lb/ft^3)	Cp (Btu/lb-°F)	μx10^{-5} (lb/ft-sec)	k(Btu/hr-ft-°F)	Pr	$g\beta\rho^2/\mu^2$
32	0.081	0.200	1.165	0.0140	0.76	3.16×10^6
100	0.071	0.240	1.285	0.0154	0.72	1.76
200	0.060	0.241	1.440	0.0174	0.72	0.850
300	0.052	0.243	1.610	0.0193	0.71	0.444
400	0.046	0.245	1.750	0.0212	0.689	0.258
500	0.0412	0.247	1.890	0.0231	0.683	0.159
600	0.0373	0.250	2.000	0.0250	0.685	0.106
700	0.0341	0.253	2.140	0.0268	0.690	70.4×10^3
800	0.0314	0.256	2.250	0.0286	0.697	49.8
900	0.0291	0.259	2.360	0.0303	0.705	36.0
1,000	0.0271	0.262	2.470	0.0319	0.713	26.5
1,500	0.0202	0.276	3.000	0.0400	0.739	7.45
2,000	0.0161	0.286	3.450	0.0471	0.753	2.84

Conductivity, k (Btu/hr-in.-°F)

$$k(T) = 1.1138 \times 10^{-3} + 1.6988 \times 10^{-6}\,T - 1.4993 \times 10^{-10}\,T^2 \quad 32°F < T < 2000°F$$

Prandtl Number, Pr

$$Pr(T) = 0.72 \qquad 32°F < T < 200°F$$

$$Pr(T) = 0.603 + 1.3017 \times 10^{-3}\,T - 4.450 \times 10^{-6}\,T^2 + 4.3333 \times 10^{-9}\,T^3$$

$$200°F < T < 500°F$$

$$Pr(T) = 0.7793 - 4.6950 \times 10^{-4}\,T + 7.474 \times 10^{-7}\,T^2 - 4.2962 \times 10^{-10}\,T^3 +$$

$$8.5365 \times 10^{-19}\,T^4 \qquad 500°F < T < 2000°F$$

Parameter, $gb\rho^2/\mu^2$ (1/°F-in.^{3})

$$g\beta\rho^2/\mu^2\,(T) = 2.4306 \times 10^3 - 21.484\,T + 8.8318 \times 10^{-2}\,T^2 - 1.4682 \times 10^{-4}\,T^3$$

$$0°F < T < 200°F$$

$$g\beta\rho^2/\mu^2\,(T) = 1.6610 \times 10^3 - 9.2850\,T + 2.1356 \times 10^{-2}\,T^2 - 2.268 \times 10^{-5}\,T^3 +$$

$$9.1329 \times 10^{-9}\,T^4$$

$$200°F < T < 800°F$$

$$g\beta\rho^2/\mu^2\,(T) = 1.8475 \times 10^2 - 3.2975 \times 10^{-1}\,T + 2.0129 \times 10^{-4}\,T^2 - 4.1096 \times 10^{-8}\,T^3$$

$$800°F < T < 2000°F$$

Specific Heat, Cp (Btu/lb-°F)

$$Cp(T) = 0.2386 + 8.8082 \times 10^{-6}\,T + 2.1375 \times 10^{-8}\,T^2 - 6.9784 \times 10^{-12}\,T^3$$

$$100°F < T < 2000°F$$

Density, ρ(lb/in.^{3})

$$\rho(T) = 5.787 \times 10^{-4}/(11.6125 + 2.527 \times 10^{-2}\,T) \qquad 32°F < T < 2000°F$$

3.2.4 Aluminum

Table 3.5. Thermophysical Properties of MTR-Type Fuel Element Aluminum (Type 6061) Material

Temp, °F	Thermophysical Properties[3.7]		
	k(Btu/hr-in-°F)	Cp(Btu/lb-°F)	ρ(lb/in3)
0	—	0.195	
32	9.75	—	
77	—	—	0.0978
140	—	0.21	
212	9.92	—	
480	—	0.25	
572	11.08	—	
800	—	0.29	
932	12.29	—	

Thermal Conductivity (Btu/hr-in-°F)

$$k(T) = 9.74795 - 6.804 \times 10^{-5}\,T + 4.12 \times 10^{-6}\,T^2 + 1.143\times10^{-10}\,T^3$$

$32°F < T < 932°F$

Specific heat, Cp(Btu/lb-°F)

$$Cp(T) = 1.95 \times 10^{-1} + 1.11875 \times 10^{-4}\,T \qquad 0°F < T < 800°F$$

Density, ρ (lb/in^3)

$$\rho(T) = 0.098 \qquad 77°F < T < 600°F$$

3.2.5 Helium

Table 3.6. Thermophysical Properties of Helium

Thermophysical Properties[3.6]					
Temp (°F)	**ρ(lb/ft^3)**	**Cp(Btu/ lb-°F)**	**k(Btu/ hr-ft-°F)**	**Pr**	**$g\beta\rho^2/\mu^2$ (1/°F-ft^3)**
0	0.012	1.24	0.078	0.670	77800
200	0.0085	1.24	0.097	0.686	15600
400	0.0064	1.24	0.115	0.700	4840
600	0.0052	1.24	0.129	0.715	2010
800	0.0044	1.24	0.138	0.730	932

Thermal Conductivity (Btu/hr-in-°F)

$$k(T) = 0.00675 + 7.042E^{-6}T \qquad 0°F < T < 800°F$$

Prandtl Number, Pr

$$Pr(T) = 0.67040 + 0.00007\ T \qquad 0°F < T < 800°F$$

Parameter, $g\beta\rho^2/\mu^2$ (1/°F-in^3)

$$g\beta\rho^2/\mu^2 = 45.0 - 3.2x10^{-1}\ T + 9.4x10^{-4}\ T^2 - 1.2x10^{-6}\ T^3 + 5.7x10^{-10}\ T^4$$

$$0°F < T < 800°F$$

Specific heat, Cp (Btu/lb-°F)

$$Cp = 1.242 \qquad 0°F < T < 800°F$$

Density, ρ (lb/in^3)

$$\rho(T) = 1/1728\ (0.0119/(1+0.002168T)) \qquad 0°F < T < 800°F$$

3.2.6 Fuel Material (Al + Fuel Meat + Helium Composite) [3.8]

Specific Heat, Cp(Btu/lb-°F)

Table 3.7. Temperature Versus Specific Heat

Temp °F	Cp(Btu/lb-°F)
80	0.274
440	0.316
980	0.376
1205	0.411

Conductivity, k (Btu/hr-in-°F)

$$k = 2.96$$

Density, ρ (lb/in^3)

$$\rho = .0745$$

Specific Heat, Cp (Btu/lb-°F)

$$Cp(T) = .35910 + 0.00016\ T \qquad 80°F < T < 1205°F$$

3.3 TECHNICAL SPECIFICATIONS OF COMPONENTS

The MTR-type fuel divider is made out of Type 304 stainless steel with a transition temperature of 2600°F [3.9]. The maximum design fuel element temperature for the MTR-type fuel is 400°F.

The temperature resulting from 10CFR71 [3.10] normal and accident conditions fall well within the design criteria limit as shown in Table 3.1 in the Subsection 3.1.3. The technical specifications of the Model 2000 Transport Package [3.1] are not affected by the MTR-type fuel divider.

3.4 THERMAL EVALUATION FOR NORMAL CONDITIONS OF TRANSPORT

This Section presents the thermal analyses of the Model 2000 Transport Package with the MTR-type fuel divider for the normal conditions of transport. The thermal conditions considered are those specified in 10CFR71 [3.10] applicable to the fuel divider as summarized in Subsection 3.1.2. The Model 2000 Transport Package is mounted on the truck in its normal position (vertical orientation) and is subjected to natural convection and radiation heat transfer on the Package surface.

The cask cavity is gas-filled (helium). Analysis of the air-filled cask is presented in Appendix 3.7.3. Heat generated by the fuel elements are conducted and radiated to the fuel divider, and then transferred to the cavity wall through helium gas or air space by all modes of heat transfer, i.e., by conduction, natural convection and radiation. Then the heat is transferred further by conduction through the cask body, convection across the gap between the cask and overpack, convection and conduction across overpack wall, and a combination of natural convection and radiation from the overpack exterior to the environment. The analytical model used in thermal evaluation during normal conditions of transport is described in Subsection 3.4.1.

3.4.1 Analytical Model

While the cask and overpack are represented in a 2-D finite element model, the geometry of the fuel divider requires a 3-D model representation. To facilitate the analysis process, the thermal analysis is done in a two step process. Two separate finite element models are constructed and used, one representing the cask and the overpack (referred to as "Package model"), and the other for the fuel divider (referred to as "Divider model"). The cask model is identical to the ones used in the previous analysis in Reference [3.1]. Detailed descriptions of each model are presented in Paragraphs 3.4.1.1 and 3.4.1.2.

The cask model is first run with 1500 watts of heat distributed uniformly on the cask cavity wall. The surface area proportion is used to divide the amount of heat flow to each section of the cask cavity walls as used in Reference [3.1] — 9% through the top cover, 10% through the bottom surface, and 81% through the vertical wall. Different heat distribution schemes have been extensively studied and presented in Reference [3.1] for Model 2000 cask with 2000 watts contents heat, which show that this approximation is adequate.

The cask model closely represents the actual transport package except for the overpack toroid shells. Figure 3.1 shows the finite element model of the cask and overpack. The toroidal shells are not included in the model because they will collapse during the free-drop event, and their omission in the evaluation of normal condition is conservative. Because an axisymmetric solution is used, only a cross section of the package is modeled.

The finite element model of the MTR-type fuel divider is shown in Figure 3.2. The helium or air spaces are not shown in the figure for clarity. Only 1/2 of the fuel divider is modeled to be consistent with the structural model. Gas spaces between the cask cavity and the fuel divider are specifically modeled.

3.4.1.1 Cask and Overpack

The cask model consists of various axisymmetric elements; two-node conduction elements, two-node boundary elements, three-node triangular elements, and four- and eight-node quadrilateral elements. Each element is characterized by one of a total of 41 different material property sets. These many property sets allow a detailed representation of the four materials (steel, lead, aluminum, and air) within the model. Several material property sets represent the same material but at different temperatures. This is to allow variations in material properties spatially within a given material. Air is also represented by various property sets to account not only for temperature variation but also for different heat transfer modes. The mode of heat transfer across an air space varies if the air space is enclosed or open and also if it is horizontally or vertically oriented.

The bulk of the cask is lead. The cask cavity and surface are lined with a 304 stainless steel cladding, 1.0 inch in thickness. This cladding is modeled with one-element thickness, eight-node quadrilateral elements. An air gap exists between the cask lead and the outer cladding. This air gap forms due to shrinkage of the lead relative to the stainless steel during the manufacturing process. The air gap is modeled by two-node conduction elements with conduction and radiation properties. The cask sits inside the overpack on a 4-inch-thick aluminum honeycomb material pad. A plate, 0.5-in.-thick, separates the bottom of the cask from the honeycomb pad. The plate is represented by one element while the honeycomb pad is represented by four elements in thickness.

Between the vertical cask surface and the inner overpack shell is an air space. This vertical air space is modeled by four-node conduction elements, one element in thickness. Air space followed by honeycomb material pad exists between the top cask surface and the overpack inner top plate. This region is represented with four-node conduction elements with four- and six-element thickness for the horizontal air space and the honeycomb pad. The overpack consists of two concentric 0.5-in.-thick, type 304 stainless steel cylindrical shells separated by an air space.

Eight equally spaced 3-in. OD tubes vertically separate these shells, and two 7.25-in. OD tubes horizontally separate them at both ends. The overpack is modeled by one-element thickness on the steel and three-element thickness on the vertical air space. The top and bottom horizontal air spaces are represented by seven-element thickness. The presence of these tubes in the air spaces is neglected in the model because of their small total volume as compared to the total air space volume. The boundary elements manifest the convective and radiative interfaces between the overpack outer surface and the regulatory environments, as well as the solar heat flux.

The adequacy of the analytical model to predict the thermal behavior of the Model 2000 Package is verified by a test conducted at 600 and 2000 watts of decay heat, refer to Subsection 3.7.2. The test data show excellent correlation with the analytical results.

3.4.1.2 Fuel Divider

The basic construction of the 3-D finite element model of the MTR-type fuel divider, shown in Figure 3.2, is identical to the structural model as discussed in Chapter 2. To this basic model, some elements are added to represent the helium or air spaces and the fuels. The MTR-type fuel Divider model employs LIBRA type STIF35 eight-node 3-D solid brick elements. The finite element model of the MTR-type fuel divider has a total of 2264 nodes and 1625 elements, of which 1298 nodes and 700 elements are used for the fuel divider, 795 elements for the helium or air spaces, and 130 elements for the fuels. A total of ten element layers make up the complete 52 in. height of the fuel divider, with the cross-section of each layer having 70 elements as shown in Figure 3.3. In addition, a single element layer simulates 1.5 inch height of helium or air space at the top of the fuel divider, with another cylindrical element layer for the 0.125-in. helium or air spacing along the vertical section of the cavity wall. Helium or air elements 0.0625 in.-thick separate each fuel element from the surrounding divider elements to simulate the gap.

For dimensions and various interfaces discussed in this section, refer to the GE Certification Drawing, "MTR-type fuel divider", 105E9557.

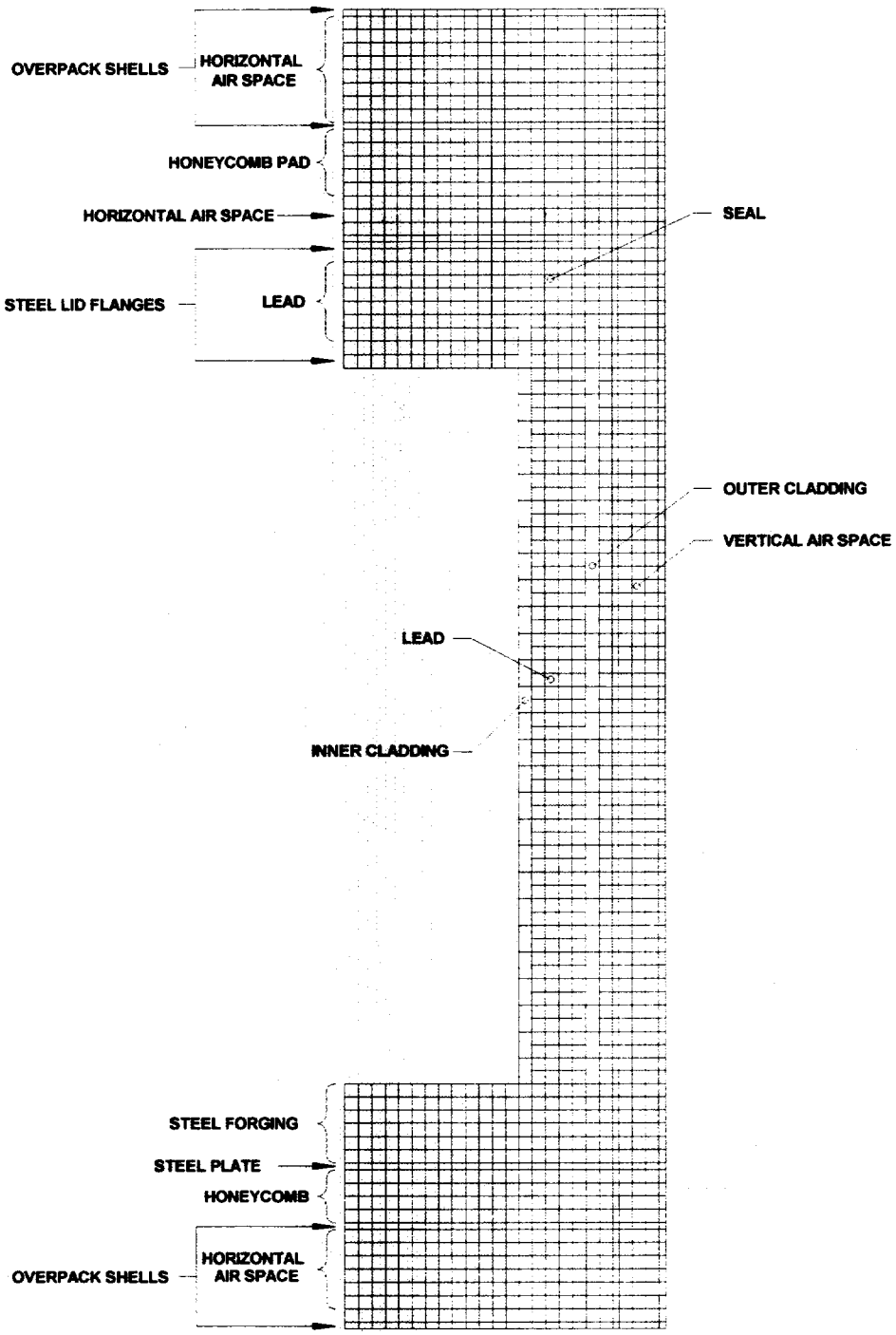

Number of Elements: 2,172 Number of Nodes: 2,201

Figure 3.1. Finite Element Model of Cask and Overpack, Package Model

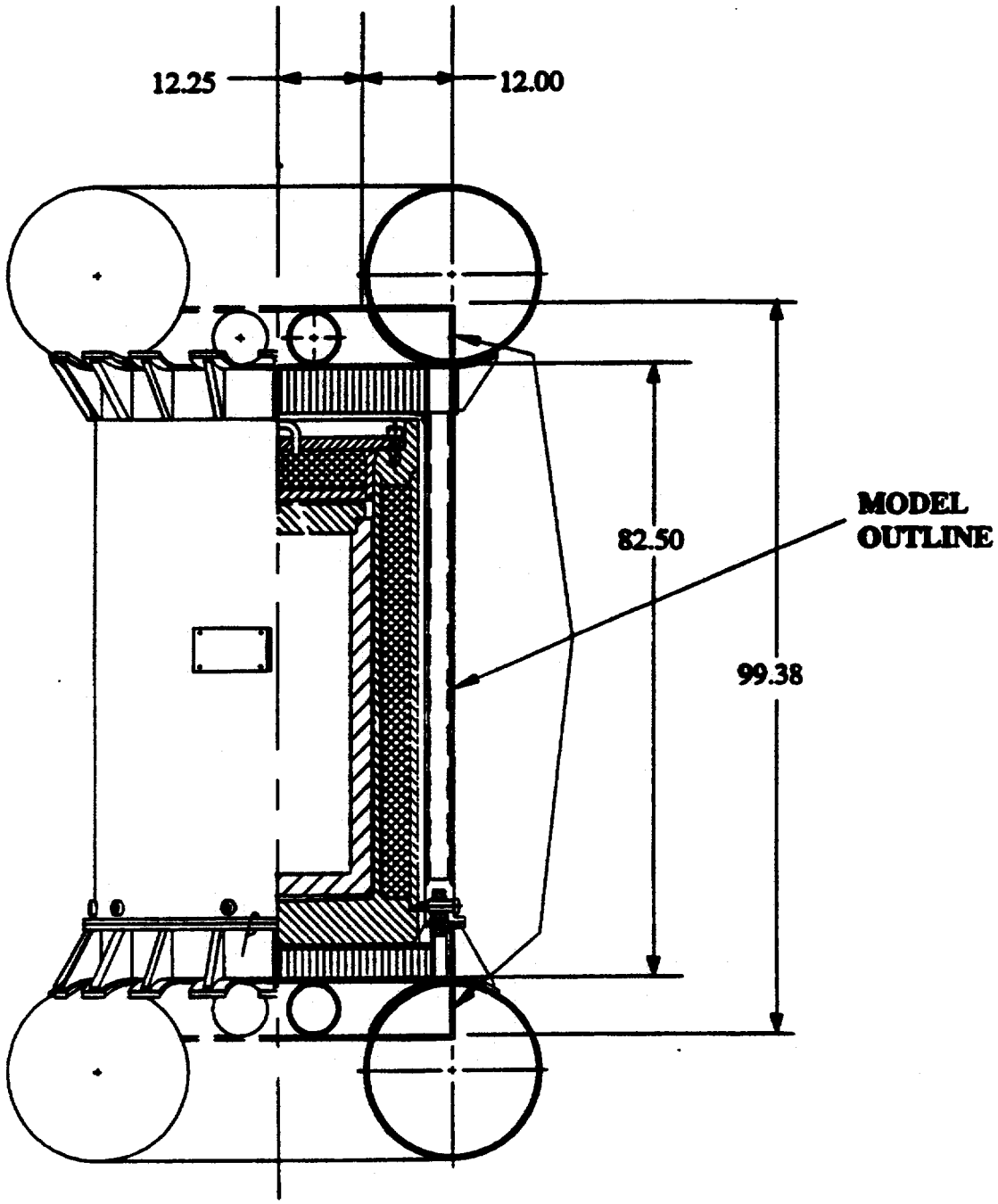

Figure 3.1A. Thermal Finite Element Model, Overlaid on Transport Overpack

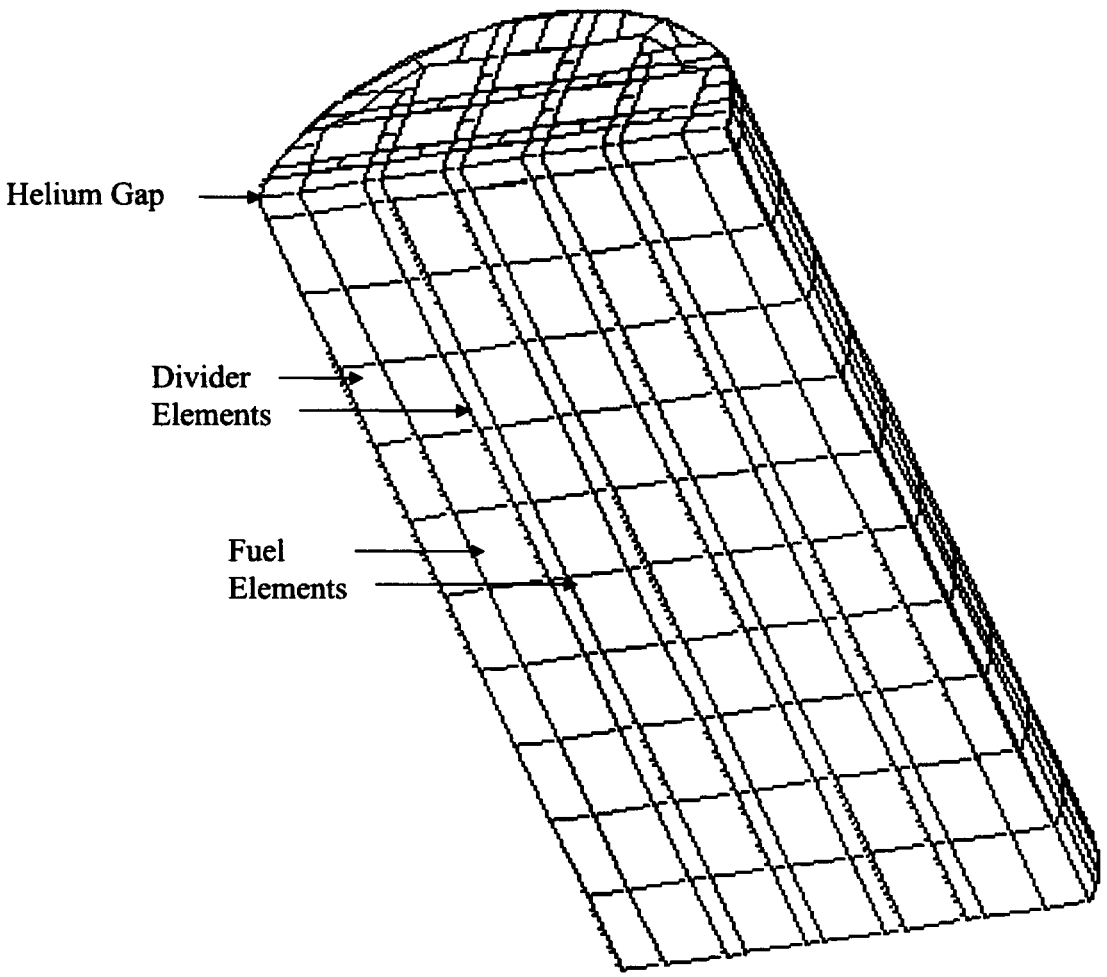

Number of Elements: 1,625 Number of Nodes: 2,264

Figure 3.2. LIBRA (Thermal) Finite Element Model of Fuel Divider, Divider Model

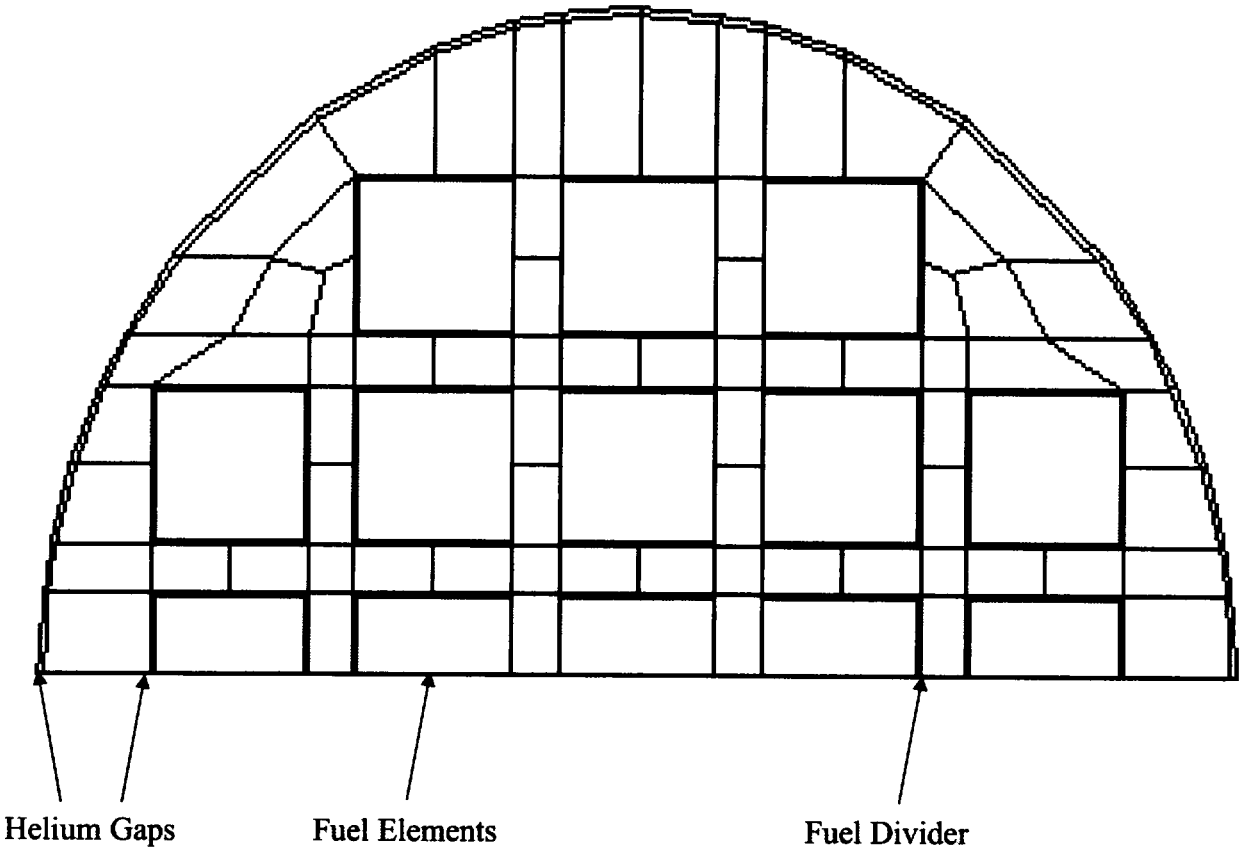

Figure 3.3. Cross-Section of Fuel Divider (Thermal) Finite Element Model

3.4.1.3 Heat Input

The maximum heat load capacity for the Model 2000 Transport Package is 2000 watts [3.1]. The total decay calculated for the application of the MTR type fuel divider is 1500 watts.

For brick elements, used in the Divider model, LIBRA requires the heat input to the model to be in the form of heat density (i.e., total heat divided by the element's volume). The heat in each fuel element is assumed to be uniformly distributed throughout the element body. The heat density values used in the finite element model are calculated as follows:

$$q_{outer} = \frac{\text{Heat Loading}}{\text{Fuel Volume}}$$

$$= \frac{1500\ (\text{Watts}) \times (3.41\ \text{BTU / hr - Watts})}{21(\text{elements}) \times 3.375\ (\text{in}) \times 3.025\ (\text{in}) \times 52\ (\text{in})}$$

$$= 0.4591\ \text{Btu/hr-in}^3$$

3.4.1.4 Enclosed Air or Helium Space Property Sets

The enclosed air spaces in the Package model are represented by five property sets, and the enclosed helium spaces in the Divider model by twelve property sets. When the convective heat transfer becomes the dominant mode, heat transfer via conduction is negligible. The criteria for selecting the heat transfer mode for either models is discussed below.

For convective heat transfer in an enclosed vertical space, Gebhart [3.11] describes the following:

$$Nu = 0.18 \cdot \sqrt[4]{Gr}(H/s)^{-\frac{1}{9}} \qquad 2 \cdot 10^4 < Gr < 2 \cdot 10^5$$

$$Nu = 0.065 \cdot \sqrt[3]{Gr}(H/s)^{-\frac{1}{9}} \qquad 2 \cdot 10^5 < Gr < 11 \cdot 10^6$$

where:

Nu	=	Nusselt Number
Gr	=	Grashof Number based on s
s	=	distance across enclosed space
H	=	height of enclosed space

for Gr less than 2,000 the process is simple conduction (i.e., Nu = 1.0). The Grashof Number is defined here as:

$$Gr = \frac{\rho^2 g \beta s^3 \Delta T}{\mu^2}$$

where:

ρ	=	density, lb/ft^3
g	=	acceleration of gravity (32.1 ft/sec^2)
β	=	coefficient of the thermal expansion (°F)
ΔT	=	temperature difference across enclosure (°F)
μ	=	viscosity (lb/ft-sec)

The relationship between Nu and Gr provided above applies strictly to an air or helium space enclosed between plates.

The convective heat transfer in an enclosed horizontal space depends on the temperature of the upper and lower plates. If the upper plate temperature is higher than the lower plate, the process is simple conduction; therefore

$$Nu = 1.0$$

If vice versa, lower plate warmer, then

$$Nu = 1.0 \qquad Gr < 2 \cdot 10^4$$

$$Nu = 0.195\sqrt[4]{Gr} \qquad 2 \cdot 10^4 < Gr < 4 \cdot 10^5$$

$$Nu = 0.068\sqrt[4]{Gr} \qquad 4 \cdot 10^5 < Gr$$

These relations are described in Gebhart [3.13]. Properties are evaluated at the average of the two surface temperatures.

Once Nu is known, convective heat transfer coefficient, h_c, can be found by the following expression for both vertical and horizontal air and helium spaces:

$$h_c = \frac{Nu \cdot k}{s}$$

where: k = thermal conductivity of air (Btu/hr-in.-°F)

s = as before, distance across the space (in.)

For radiative heat transfer,

$$h_r = F\sigma\,(T_1^2 + T_2^2) \cdot (T_1 + T_2)$$

where: T_1, T_2 = temperatures on either side of the space (°R)

σ = 1.1944×10^{11} (Btu/hr-in.^{2}-°R^4)

F = gray body shape factor

The gray body shape factor, F, is defined as:

$$F = \frac{1}{\left(\frac{1}{e_1} - 1\right) + \frac{A_1}{A_2}\left(\frac{1}{e_2} - 1\right) + \frac{1}{F_{12}}}$$

where: A_1 = area of smaller surface

A_2 = area of larger surface

e_1, e_2 = emissivities

F_{12} = shape factor

The shape factor, F_{12}, is purely a function of the geometry of the system. When body A_1 is completely enclosed by body A_2 and A_1 cannot see itself, $F_{12} = 1.0$ [3.14].

As an example, for oxidized 304 SS, $e_1 = e_2 = 0.52$ [3.9] and assuming $A_1 = A_2$,

$$F_{12} = 0.351$$

for all enclosed air space material sets.

The finite element model represents air or helium spaces with conductive elements. The conversions from h to k are as follows:

$$k = h \cdot s$$

As before, s is the distance across the space.

In general, the effective conductivity across the air or helium space, k_e, is due to conduction plus radiation. However, a convective mode may arise depending upon the Gr and/or the plates' temperatures as discussed before. Therefore, the makeup of k_e may be as follows:

$$k_e = k + h_r \cdot s, \text{ or}$$

$$k_e = (h_c + h_r) \cdot s$$

In the perpendicular direction, along the space, the effective conductivity, k_e, is assumed to be pure conduction.

$$k_e = k$$

The vertical air space between the inner and outer shells of the overpack structure in the Package model, material set 32, contains eight evenly spaced tubes. These tubes are used as energy absorbing devices and spacers. The effect of these tubes as heat transfer mechanisms is neglected. This is based on the low value 0.03 of the ratio of total tube area to total air area.

3.4.1.5 Boundary Property Sets

There are three material property sets, numbers 39 through 41, surrounding the Package model. These sets link the model with the external environment. Each set contains the film coefficient, ambient temperature and solar heat flux value.

Property set 40 covers the vertical outside wall of the model, while sets 39 and 41 are along the bottom and top horizontal surfaces, respectively. For convection from a large diameter cylinder [3.15]

$$Nu = 0.59 \sqrt[4]{Ra} \qquad 10^4 < Ra < 10^8$$

$$Nu = 0.13 \sqrt[3]{Ra} \qquad 10^8 < Ra$$

where the Rayleigh number, Ra, is defined as

$$Ra = Gr \cdot Pr$$

and the Gr is based upon L dimensions instead of s in the enclosed space condition in Paragraph 3.4.1.2. The fluid properties are determined at the average temperature between the wall (T_o) and film (T_f) temperatures.

For horizontal surfaces, the following relations apply [3.16]:

If the surface warmer than the surrounding medium is facing upward or the cooler surface is facing downward, then:

$$Nu = 0.54\,(GrPr)^{1/4} \quad 10^5 < Gr \leq 2 \cdot 10^7$$

$$Nu = 0.14\,(GrPr)^{1/3} \quad 2 \cdot 10^7 < Gr \leq 3 \cdot 10^{10}$$

However, for the warmer side facing downward and the cooler side facing upward,

$$Nu = 0.27\,(GrPr)^{1/4} \quad 3 \cdot 10^5 < Gr < 3 \cdot 10^{10}$$

Here, also, the fluid properties are determined at the average temperature, $0.5(T_o + T_f)$; and the L dimension is replaced by 0.9 D, where D is the diameter of the disk.

After Nu is determined, the convective heat transfer coefficient is calculated using the equation below. In this equation, s represents the cylinder length L for material set 40 and 0.9 D for the other sets.

$$h_c = \frac{Nu \cdot k}{s}$$

In addition to convection, the cask surface interacts radiatively with its surroundings. The radiative heat transfer coefficient, h_r, is calculated using the equations provided in Paragraph 3.4.1.4. Regulatory environments place the transport package in an outside environment. Therefore, in evaluating the equation for the gray body shape factor, it was assumed that:

(1) A_1 is negligible compared with A_2, and

(2) $F_{12} = 1$.

The film coefficient, h (Btu/hr-in.^{2}-°F) is:

$$h = h_c + h_r$$

The overpack structure of the transport package is basically cylindrical but does contain a toroidal shell at both ends. These shells substantially mitigate the effects of the thermal environment. However, their effects are local in relation to the cask structure because of the transport package geometry. The distance from the cask structure to the outside environment is shorter in the radial direction than through the toroidal shell. Therefore, the cask structure would not be affected by the surroundings of the toroidal shells. For this reason, the model does not account for their effects. These areas are treated in the model as an extension of the top and bottom horizontal plates and the vertical cylindrical wall. The only credit taken for their presence is during the solar load calculations. The solar input over the toroid shell area is calculated based on fraction of curve and horizontal surfaces to the total surface of the model.

3.4.1.6 Solar Heat Load

The solar load is represented in the model by the quantity "q", rate of heat transfer per unit area. The value of q is calculated as follows.

For flat surface transported horizontally:

$$\text{Solar Load Value} = 2{,}950 \text{ Btu per ft}^2 \text{ per 12 hours [3.17]}$$

$$q_f = \frac{2{,}950 \text{ Btu}}{(144 \text{ in}^2)\ 12 \text{ hr}} = 1.707 \frac{\text{Btu}}{\text{hr - in}^2}$$

For curved surface:

$$\text{Solar Load Value} = 1{,}475 \text{ Btu per ft}^2 \text{ per 12 hours [3.17]}$$

$$q_c = \frac{1475 \text{ Btu}}{(144 \text{ in}^2)\ 12 \text{ hr}} = 0.853 \frac{\text{Btu}}{\text{hr - in}^2}$$

Refer to Figure 3.1A for dimensions used in this analysis.

Overpack outside shell, material set 40:

$$q(40) = q_c \cdot \frac{\text{actual overpack cylinderical shell height}}{\text{model overpack cylinderical shell height}}$$

$$= 0.854 \cdot \frac{82.5}{99.38} = 0.709 \text{ Btu / hr - in.}^2$$

Overpack top surface, material set 41:

$$q(41) = q_f \frac{\text{flat surface area} = A}{\text{total model area} = C} + q_c \frac{\text{curved surface area} = B}{\text{total model area} = C}$$

$A = \pi(12.25)^2 = 471.43\ in^2$; $B = \pi(24.25^2 - 12.25^2) = 1376.02\ in^2$; $C = A + B = 1847.45\ in^2$

$$= 1.707\frac{471.43}{1847.45} + 0.854\frac{1376.02}{1847.45}$$

$$= 1.074\ \text{Btu/hr-in}^2$$

3.4.1.7 Fire Effect

Fire effect in the Package model is introduced to the model by a thermal radiation environment of 1,475°F for 30 minutes with an emmissivity coefficient of 0.9 and a transport package surface absorption coefficient of 0.8 [Reference 3.8]. After the fire, the cask is cooled naturally for a total period of 3 hours in ambient air at 100°F. To search for the maximum temperatures of the content (basket, liner, and fuel elements), the model is monitored for a total of 35 hours. The maximum temperature of the elements is reached at around 13 hours.

During the fire the gray body shape factor, F, is provided by:

$$F = \frac{1}{\frac{1}{e_1} + \frac{1}{e_2} - 1} = \frac{1}{\frac{1}{.8} + \frac{1}{.9} - 1}$$

$$= 0.7347$$

and the radiation coefficient is calculated by the equation provided in Paragraph 3.4.1.2.

3.4.1.8 Overpack Outer Shell Elements Property Set

The overpack outer shell is represented in the Package model by three material property sets, sets 34 through 38. The model does not account for any effect given by the toroidal shells because they are smashed during the 30-foot free-drop event. The free-drop event precedes the fire event.

3.4.1.9 Aluminum-Air Conglomerate Property Sets (Honeycomb Material)

Property sets 26 and 28 represent the honeycomb pad installed at the bottom and top of the cask structure. The material is made of corrugated aluminum foil 0.002 in. gauge with a cell width of 0.125 in. The density of the material is listed by the manufacturer as 8.1 pcf nominal. Based on these data, the thermal properties were calculated as follows:

Pad Volume, Vp

$$Vp = \pi R^2 H$$

where: R = pad radius

H = pad height

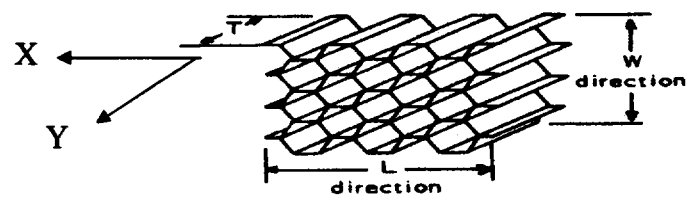

Figure III-1 Hexagonal Core

For property set 20

$$Vp = \pi(20.0)^2(4) = 5{,}026.55 \text{ in.}^3$$

its weight,

$$Wt = Vp \cdot \rho = 5{,}026.55\ (8.1)/1{,}728$$

$$= 23.56 \text{ lb.}$$

Next, the air and aluminum volume fractions are determined by solving the following equations,

$$W_t = \rho_{Al} \cdot V_{Al} + \rho_{Air} V_{Air}$$

$$V_P = V_{Al} + V_{Air}$$

$$V_{Al} = 241.64 \text{ in.}^3 \text{ and } V_{Air} = 4{,}784.91 \text{ in.}^3$$

Therefore, $\frac{V_{Al}}{V_P} = 0.048$ and $\frac{V_{Air}}{V_P} = 0.952$

$$k_x = \frac{V_{Al}}{V_P} \cdot k_{Al} + \frac{V_{Air}}{V_P} \cdot k_{Air}$$

$$= 0.048 \cdot k_{Al} + \cdot 0.952\ k_{Air}$$

$$k_y = \frac{b_1}{L} \cdot k_{Al} + \frac{b_2}{L} \cdot k_{Air}$$

$$= 0.0679 \cdot k_{Al} + 0.9321 \cdot k_{Air}$$

where b_1 = Aluminum foil thickness

b_2 = Air space thickness

L = Honeycomb pad thickness

$$Cp = \frac{V_{Al}}{V_P} \cdot C_{P_{Al}} + \frac{V_{Air}}{V_P} \cdot C_{P_{Air}}$$

$$= 0.048 \cdot Cp_{Al} + 0.952 \cdot Cp_{Air}$$

$$\rho = 0.048\, \rho_{Al} + 0.952\, \rho_{Air}$$

3.4.1.10 Fuel Elements Property Sets (Al/Fuel Meats/Al/Helium Composite) [3.8]

A total of 15 property sets are used to represent the generic MTR-type fuel in the Divider model. The fuel element consists of an aluminum construction assembly of composite fuel plates with a rectangular cross section. The number of fuel plates could vary from 17 to 23, depending on the fuel assembly design. Each fuel plate typically consists of 0.02 to 0.03 inch fuel meats sandwiched between 0.01 to 0.014 inch aluminum clads, separated from each other 0.05 typical cooling channel. The effective material property of the fuel element can be calculated by considering a composite material of 0.01 inch Al, 0.03 inch of fuel meat, 0.01 inch of Al and 0.05 inch of helium as suggested in HFIR System RELAP5 Input Model, Reference [3.8].

The thermal conductivity is calculated as:

$$K_{eq} = \frac{K_1 l_1 + K_6 l_6 + \dfrac{b_1 + b_2 + b_3 + b_4}{\dfrac{b_1}{k_1} + \dfrac{b_2}{k_2} + \dfrac{b_3}{k_1} + \dfrac{b_4}{k_3}}}{l_1 + l_2 + l_3}$$

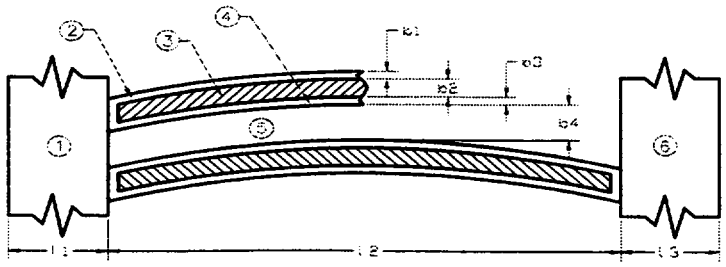

where K_{eff} = Thermal conductivity (Btu/hr-in-°F)

b_i = Thickness of each component of the composite

b_1 = 0.015 in; b_2 = 0.02 in; b_3 = 0.015

k_i = Thermal conductivity of each component of the composite

$k_{1\,(Al)} = k_2 =$ 8.37 Btu/hr-in-°F; $k_{2\,(Fuel)}$ = 0.29 Btu/hr-in-°F

And for effective density,

$$\rho_{eff} = \frac{1}{a} \cdot \frac{\sum_i (\rho_i \cdot t_i)}{\sum_i t_i}$$

where a = 0.6970

ρ_{eff} = Density (lb/in^3)

t_i = Thickness of each component of the composite

ρ_i = Density of each component of the composite

Similarly, for specific heat,

$$c_{p_{eff}} = \frac{1}{a} \cdot \frac{\sum_i (c_{p_i} \cdot \rho_i \cdot t_i)}{\sum_i \rho_i \cdot t_i}$$

where a = 0.6970

$c_{p_{eff}}$ = Specific Heat (Btu/lb-°F)

t_i = Thickness of each component of the composite

ρ_i = Density of each component of the composite

c_{p_i} = Specific heat of each component of the composite

3.4.2 Maximum Temperatures

Under the normal conditions of transport, the maximum temperature distribution in the Model 2000 Transportation Package occurs when the ambient temperature is 100°, with maximum decay heat and the maximum solar load. Figures 3.4 through 3.8 present temperature values at several locations on the Package model under normal conditions. Some of the elements within the thermal model on these figures have been erased for clarity. These figures also include values which are maximum. Also, Figures 3.9 through 3.12 show contour plots of the Package model, and Figures 3.13 through 3.16 of the Divider model for normal conditions of transport.

3.4.3 Minimum Temperatures

The minimum temperature distribution is a result of an ambient temperature of -40°F. It is assumed that there is no heating effect from decay heat or solar radiation; therefore, the transport package is assigned a minimum temperature of -40°F throughout.

3.4.4 Maximum Internal Pressures

The cask cavity is initially filled with dry helium to 14.7 psia at ambient temperature (70°F). Under the normal conditions of transport, the maximum temperature of the helium inside the cavity occurs near the fuel element. Although the average temperature of the helium is quite less, the worst case fuel surface temperature of 394°F is used as the helium temperature to calculate the maximum internal pressure.

Using the ideal gas law, the temperature and pressure relationship is, for a constant volume,

$$\frac{P_1}{T_1} = \frac{P_2}{T_2}$$

where P_1 and T_1 = Pressure and Temperature at initial state, respectively

P_2 and T_2 = Pressure and Temperature at steady state, respectively

Therefore the maximum internal pressure during normal transportation is calculated as:

$$P2 = (14.7 \text{ psia}) \cdot \left(\frac{394 + 460}{70 + 460}\right) = 23.7 \text{ psia}$$

3.4.5 Evaluation of Package Performance for Normal Conditions of Transport

Temperature values throughout the package components associated with normal conditions of transport are all within the allowable limits for the respective materials (see Table 3.1). The design pressure of 30 psia is a higher value than the pressure value corresponding to the maximum cavity (helium) temperature of 394°F.

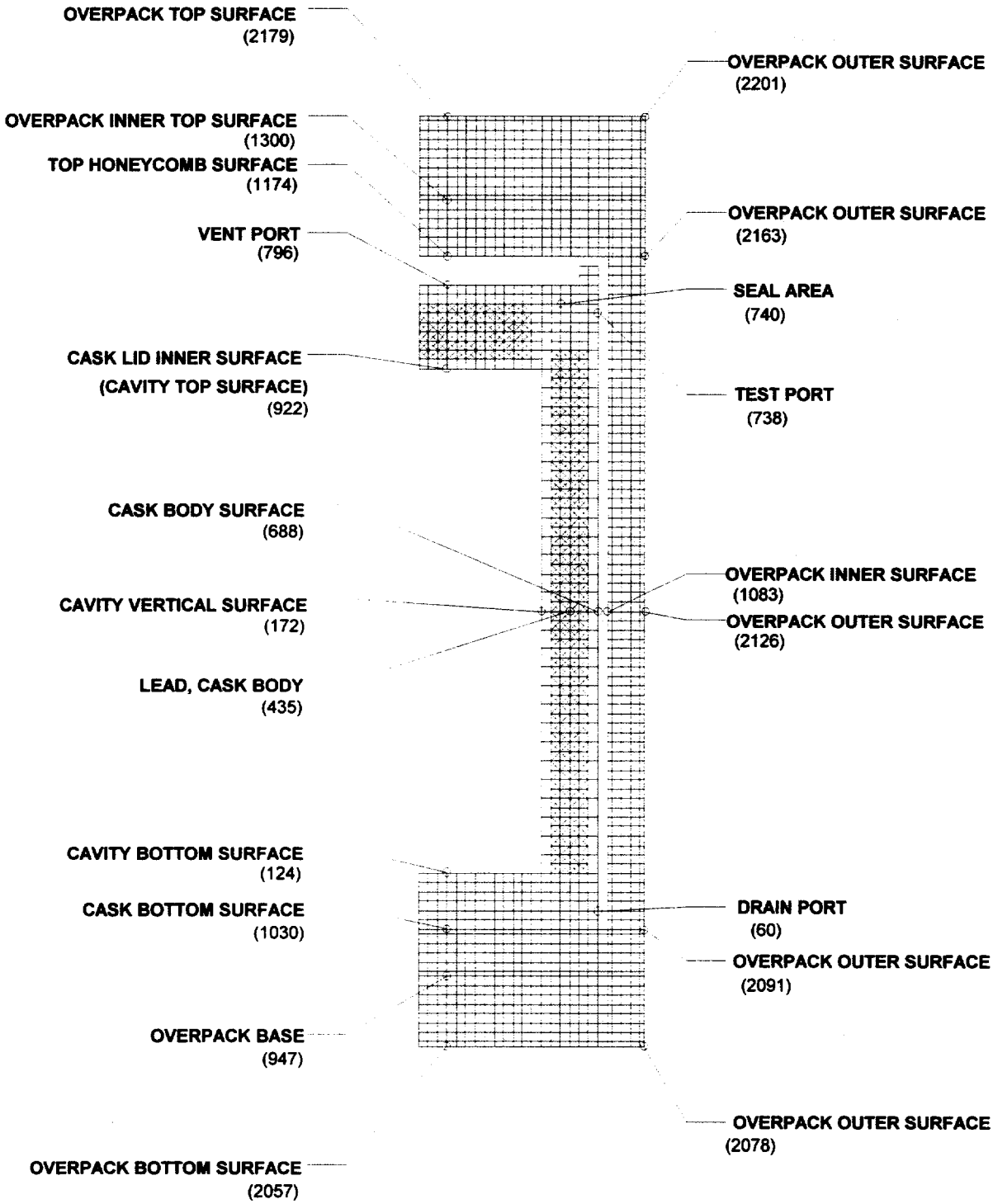

Figure 3.4. Key Plot of Temperature Locations with Node Numbers, Package Model

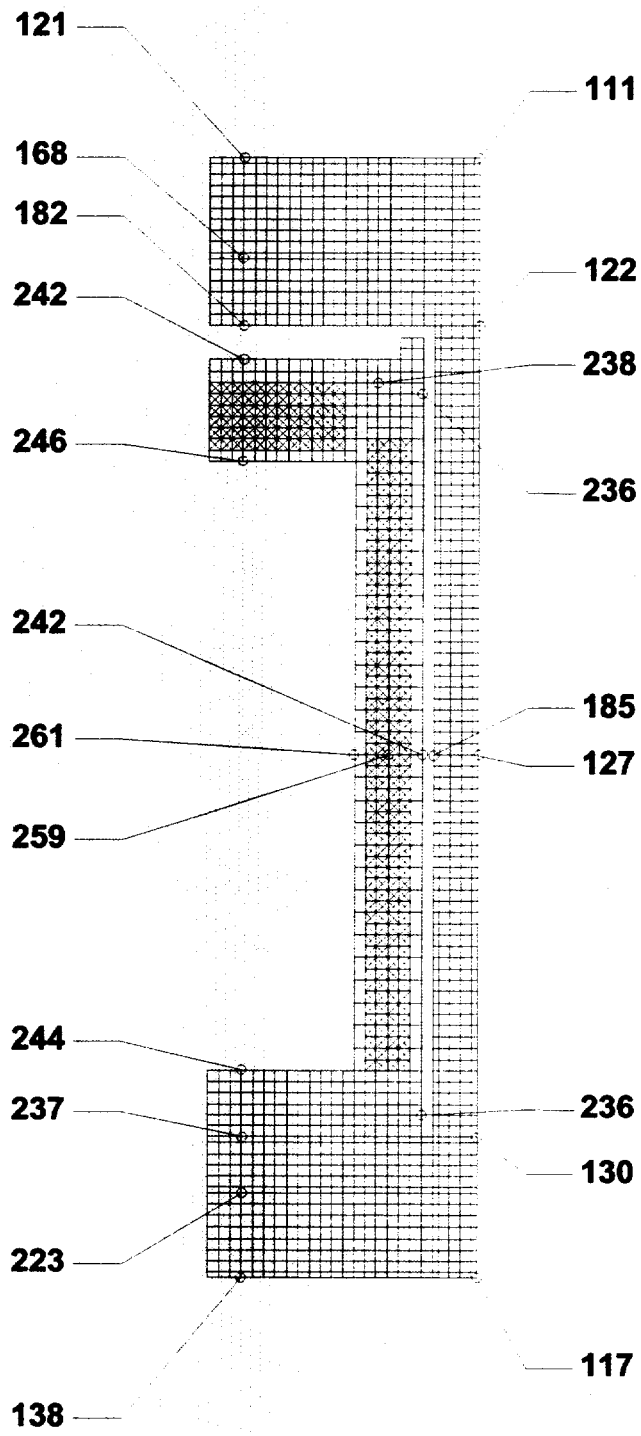

Figure 3.5. Model 2000 Transport Package, Steady-State Analysis 100°F Ambient Temperature, Maximum Decay Heat and Maximum Insulation

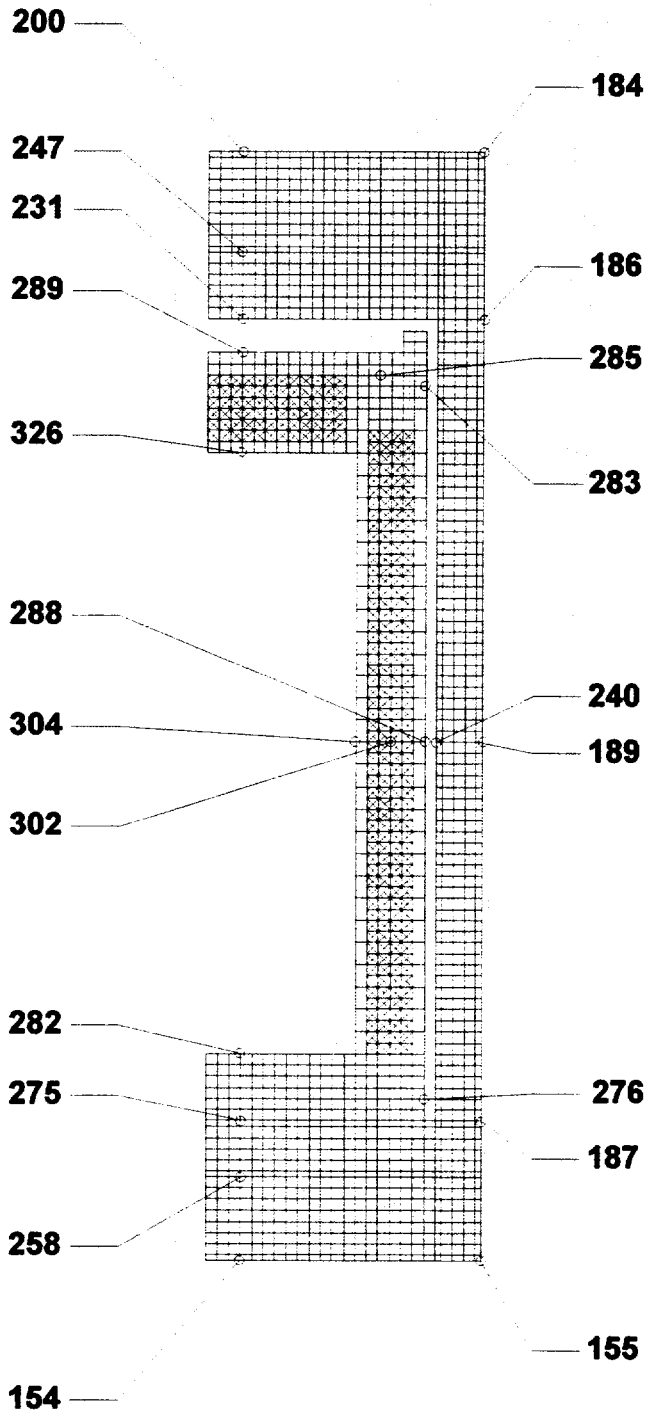

Figure 3.6. Model 2000 Transport Package, Steady-State Analysis 100°F Ambient Temperature, Maximum Decay Heat and No Insulation

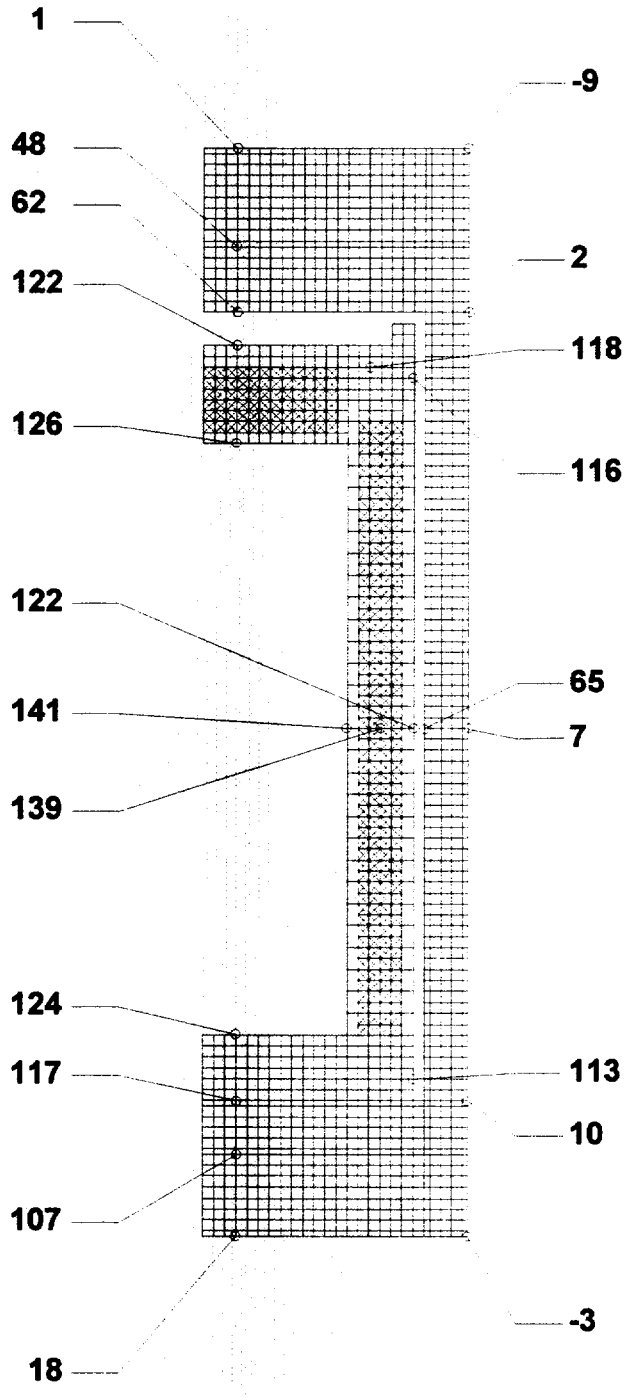

Figure 3.7. Model 2000 Transport Package, Steady-State Analysis -20°F Ambient Temperature, Maximum Decay Heat and No Insulation

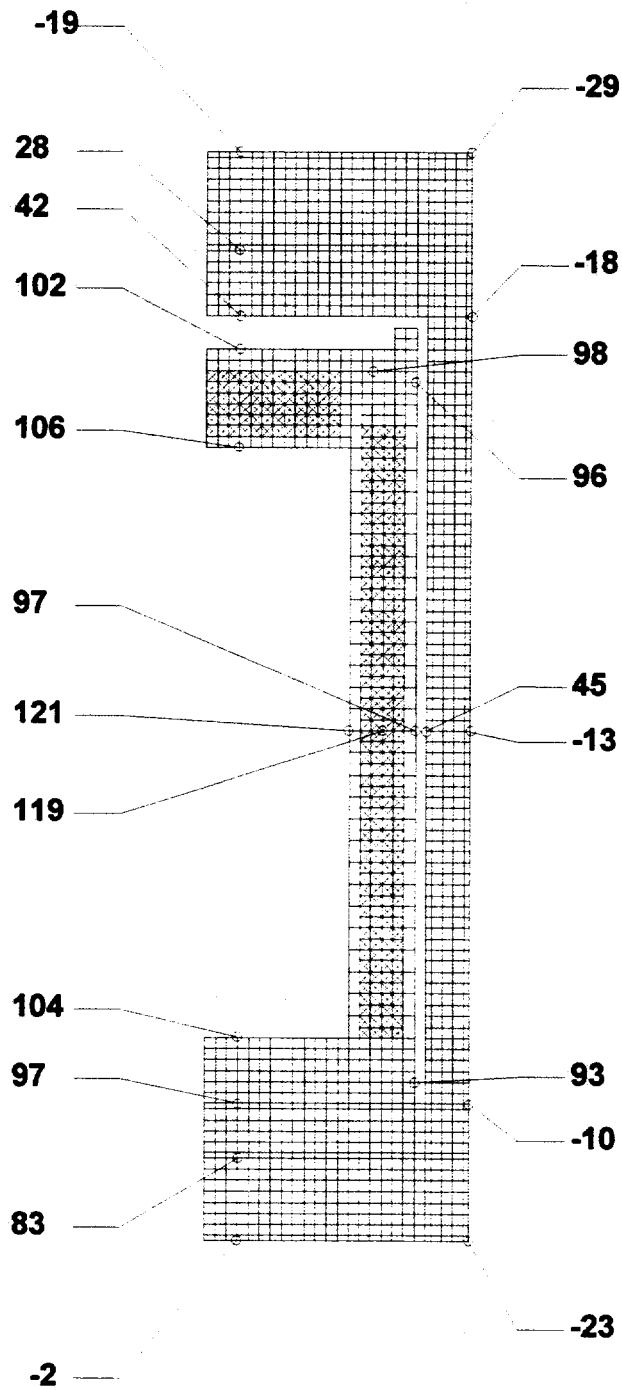

Figure 3.8. Model 2000 Transport Package, Steady-State Analysis -40°F Ambient Temperature, Maximum Decay Heat and No Insulation

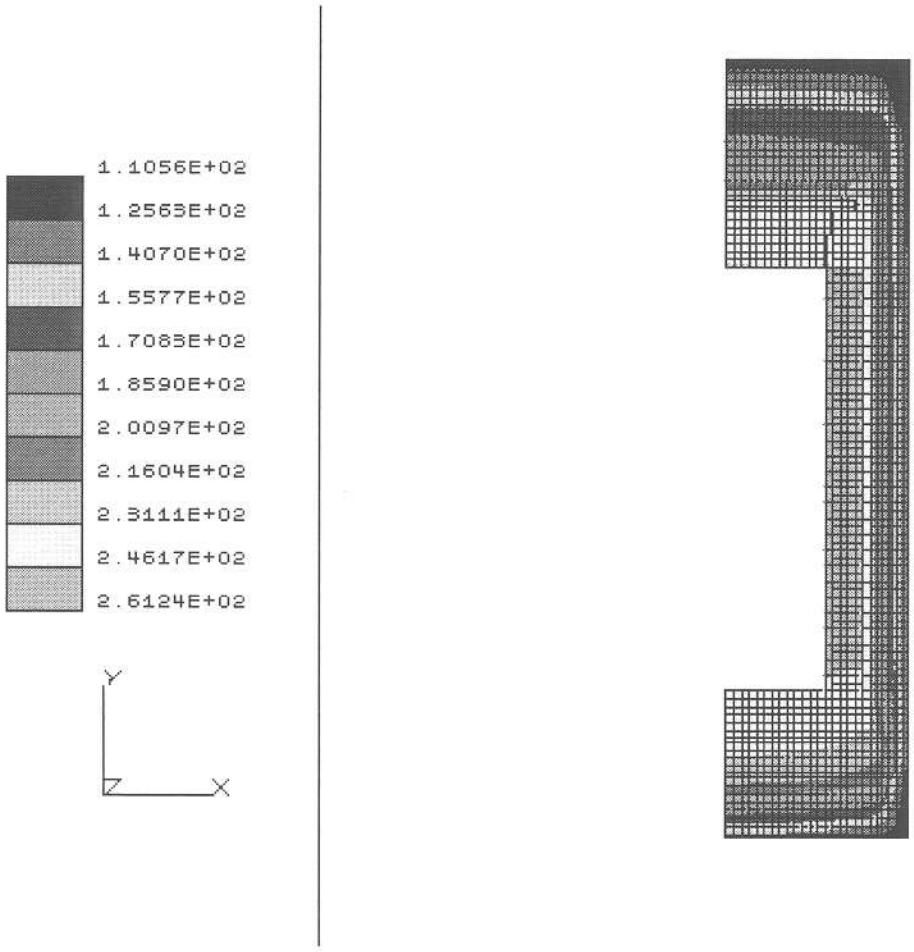

Figure 3.9. Contour Plot — Model 2000 Transport Package, Steady-State Analysis 100°F Ambient Temperature, Maximum Decay Heat and No Insulation

C07

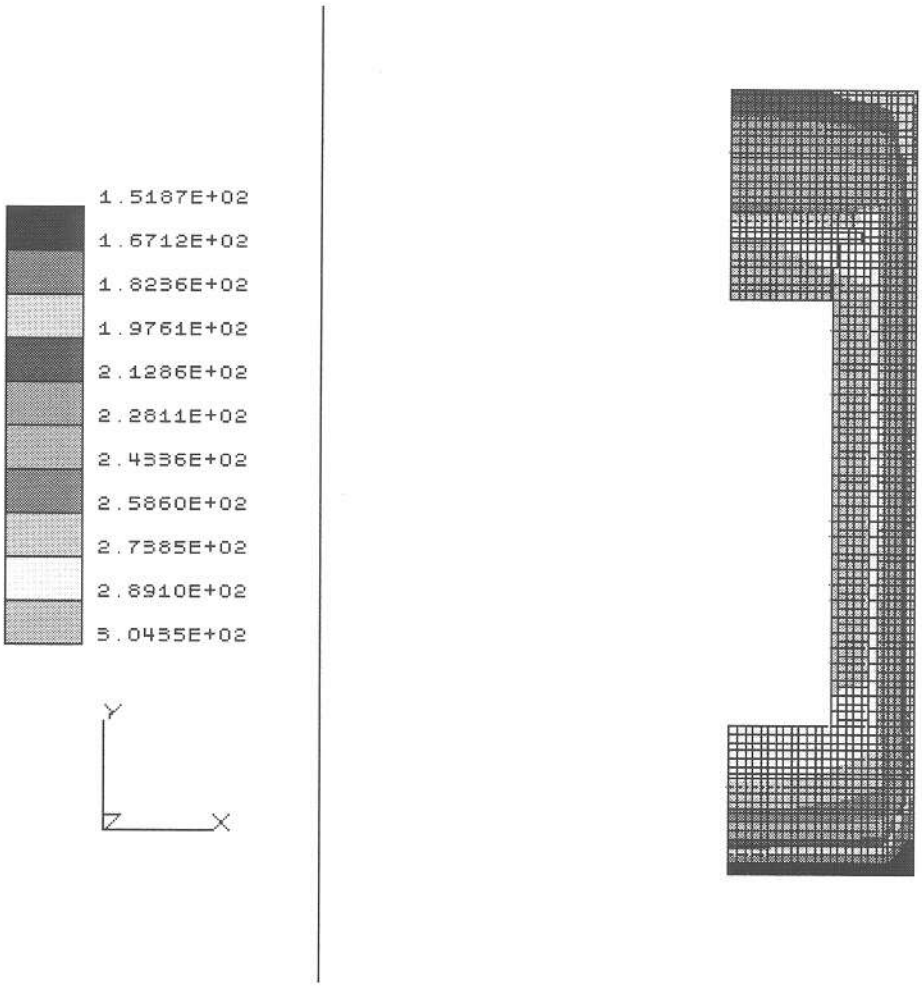

Figure 3.10. Contour Plot — Model 2000 Transport Package, Steady-State Analysis 100°F Ambient Temperature, Maximum Decay Heat and Maximum Insulation

C08

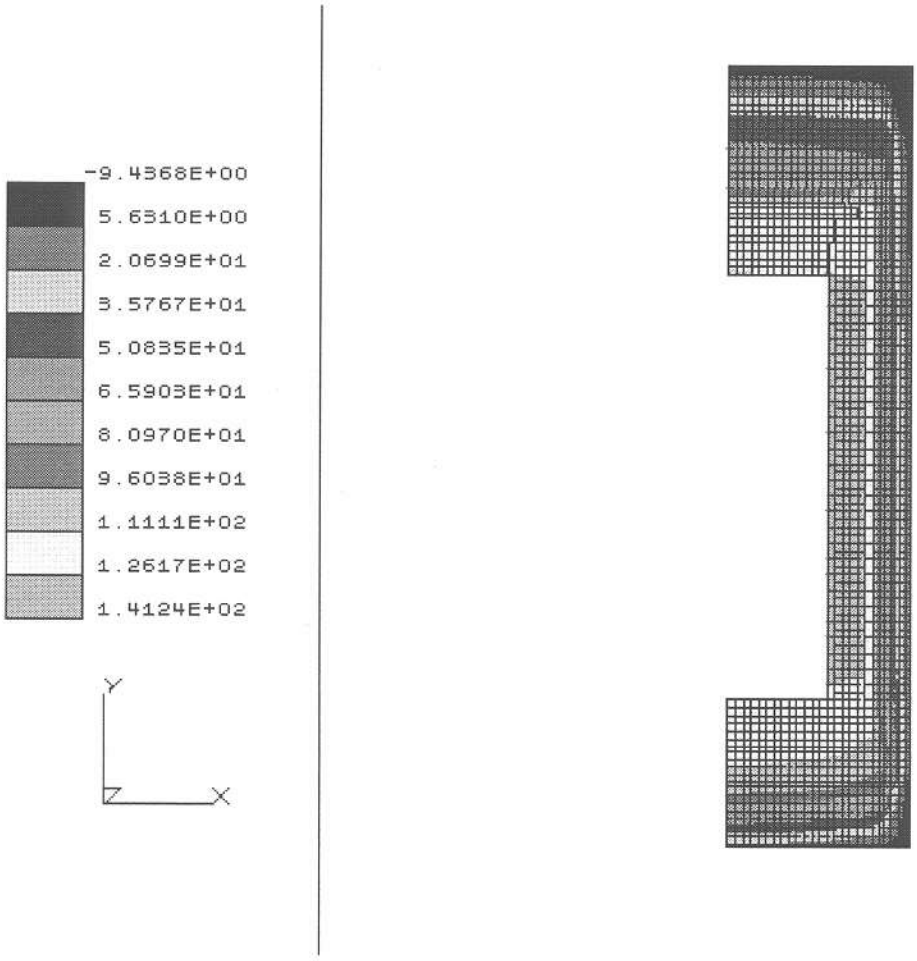

Figure 3.11. Contour Plot — Model 2000 Transport Package, Steady-State Analysis -20°F Ambient Temperature, Maximum Decay Heat and No Insulation

C09

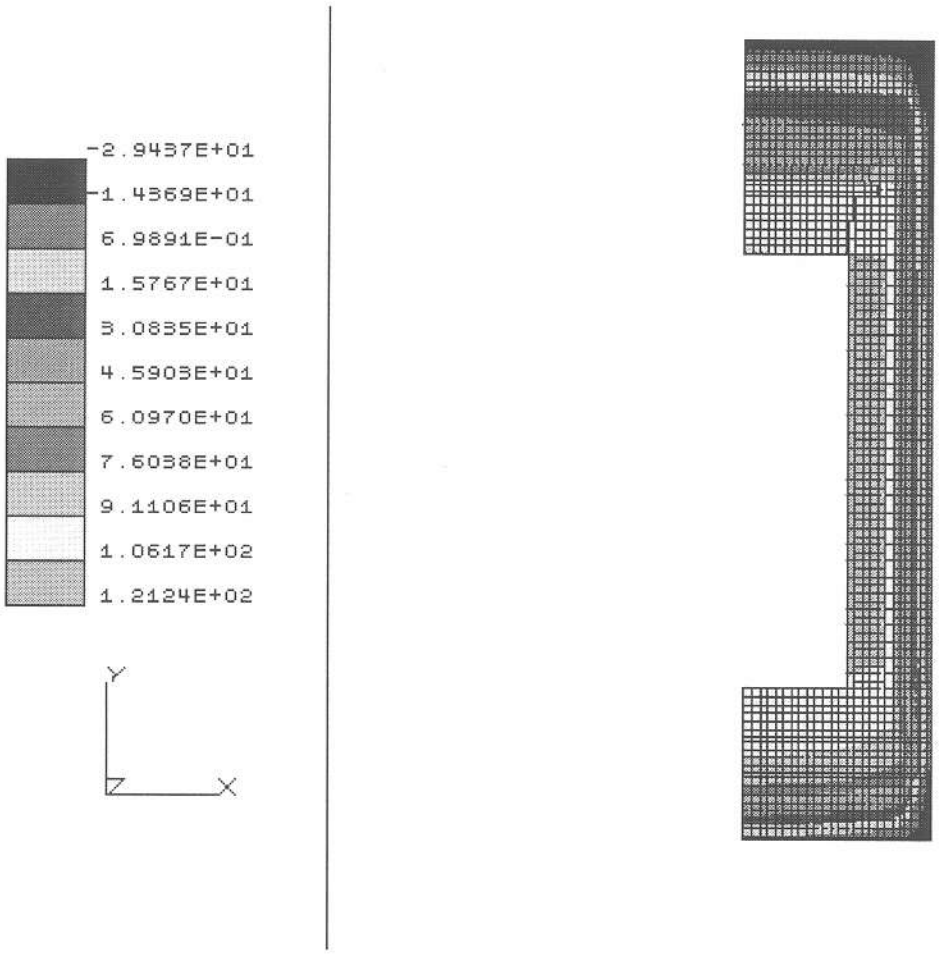

Figure 3.12. Contour Plot — Model 2000 Transport Package, Steady-State Analysis -40°F Ambient Temperature, Maximum Decay Heat and No Insulation

C10

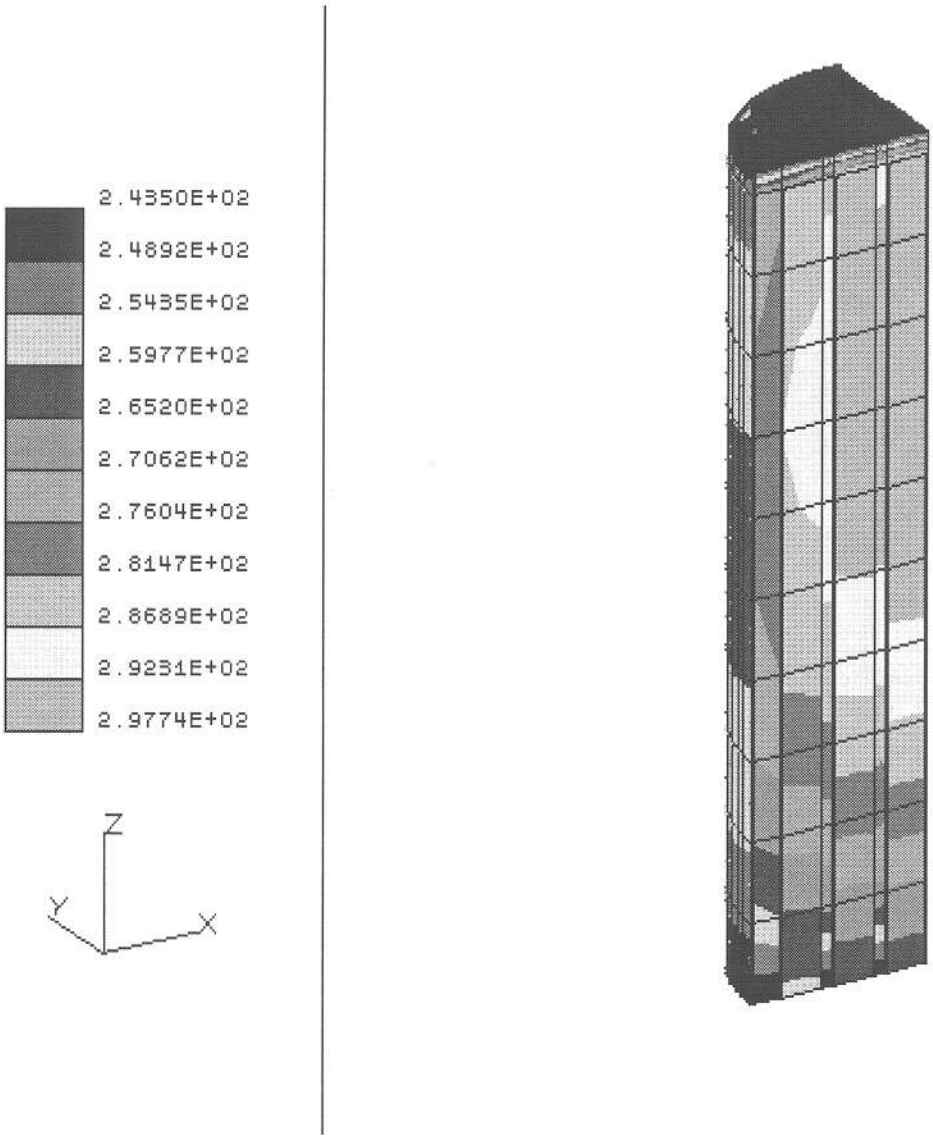

Figure 3.13. Steady-State Thermal Analysis — Fuel Divider with Fuel Elements 100°F Ambient with Maximum Decay Heat

C11

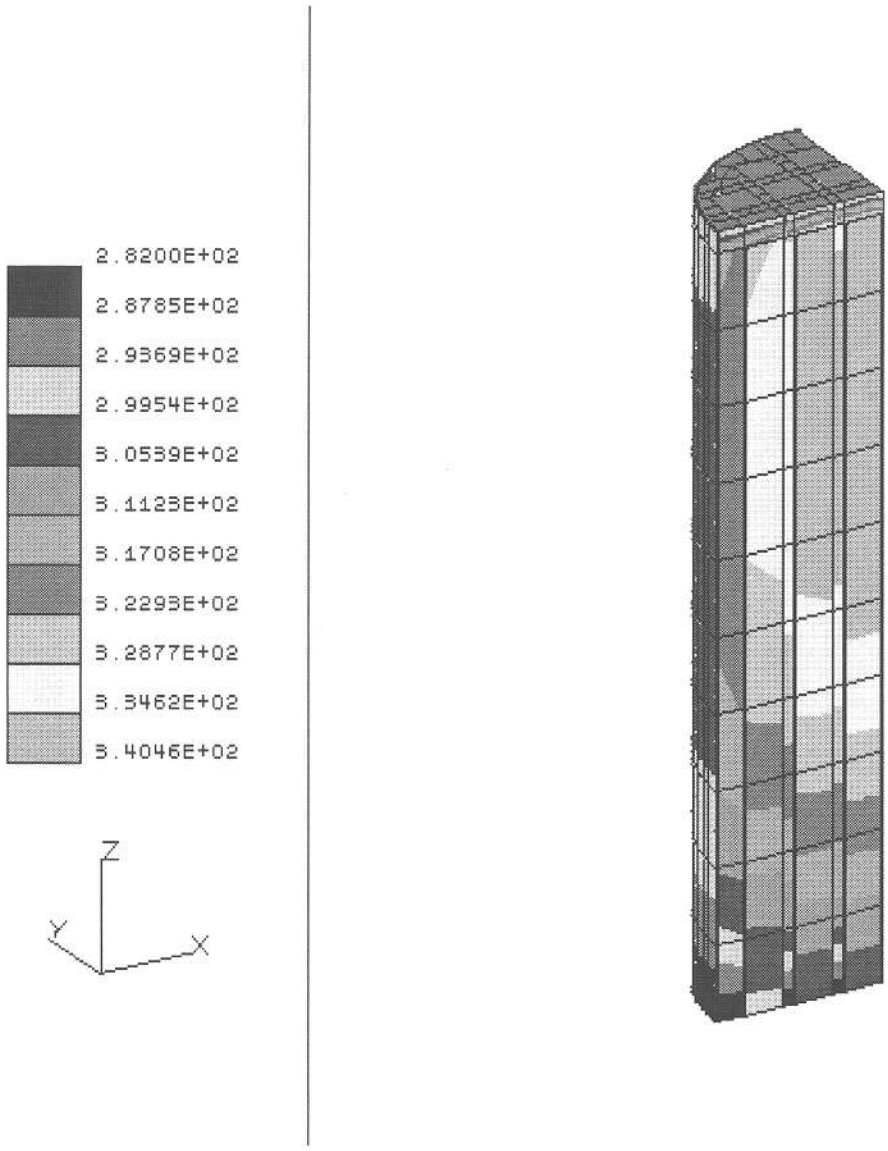

Figure 3.14. Steady-State Thermal Analysis — Fuel Divider with Fuel Elements,100°F Ambient with Maximum Decay Heat and Maximum Insulation

C12

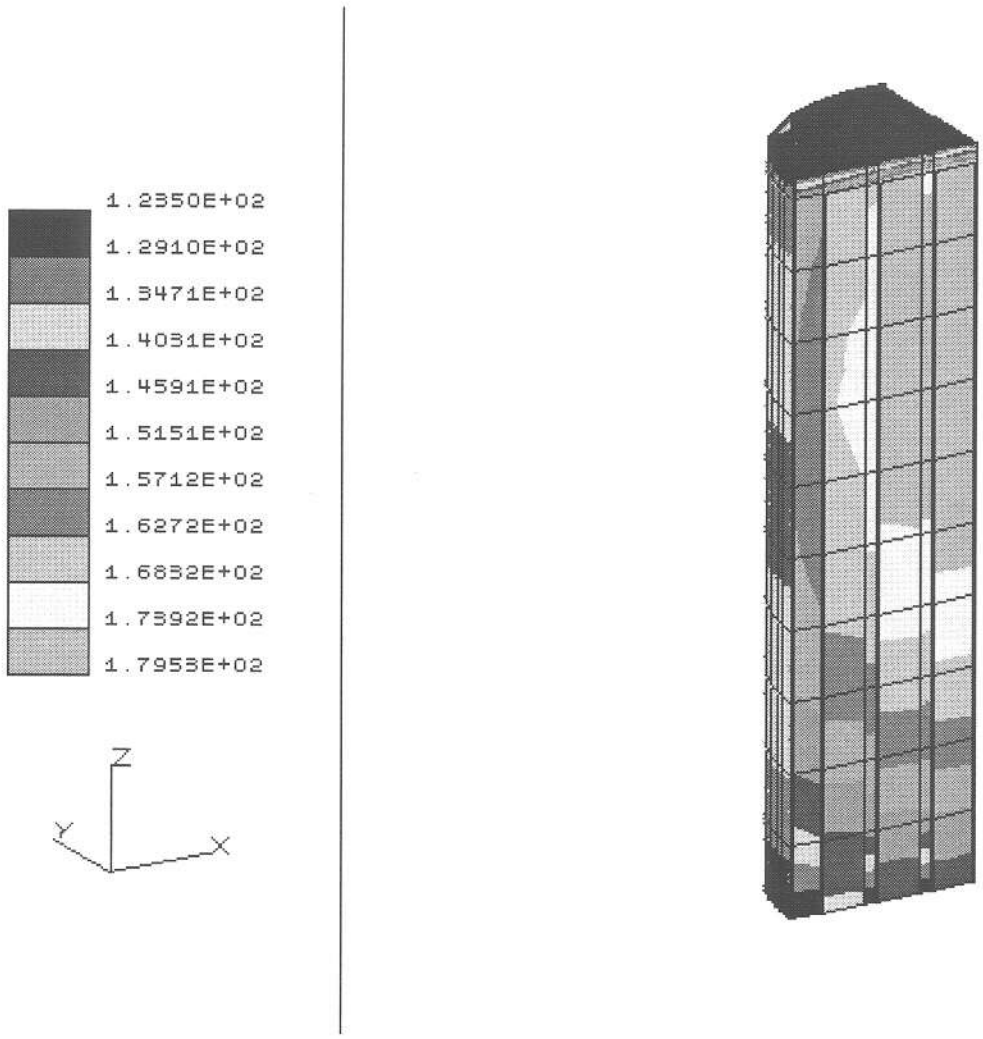

Figure 3.15. Steady-State Thermal Analysis — Fuel Divider with Fuel Elements -20°F Ambient with Maximum Decay Heat and No Insulation

C13

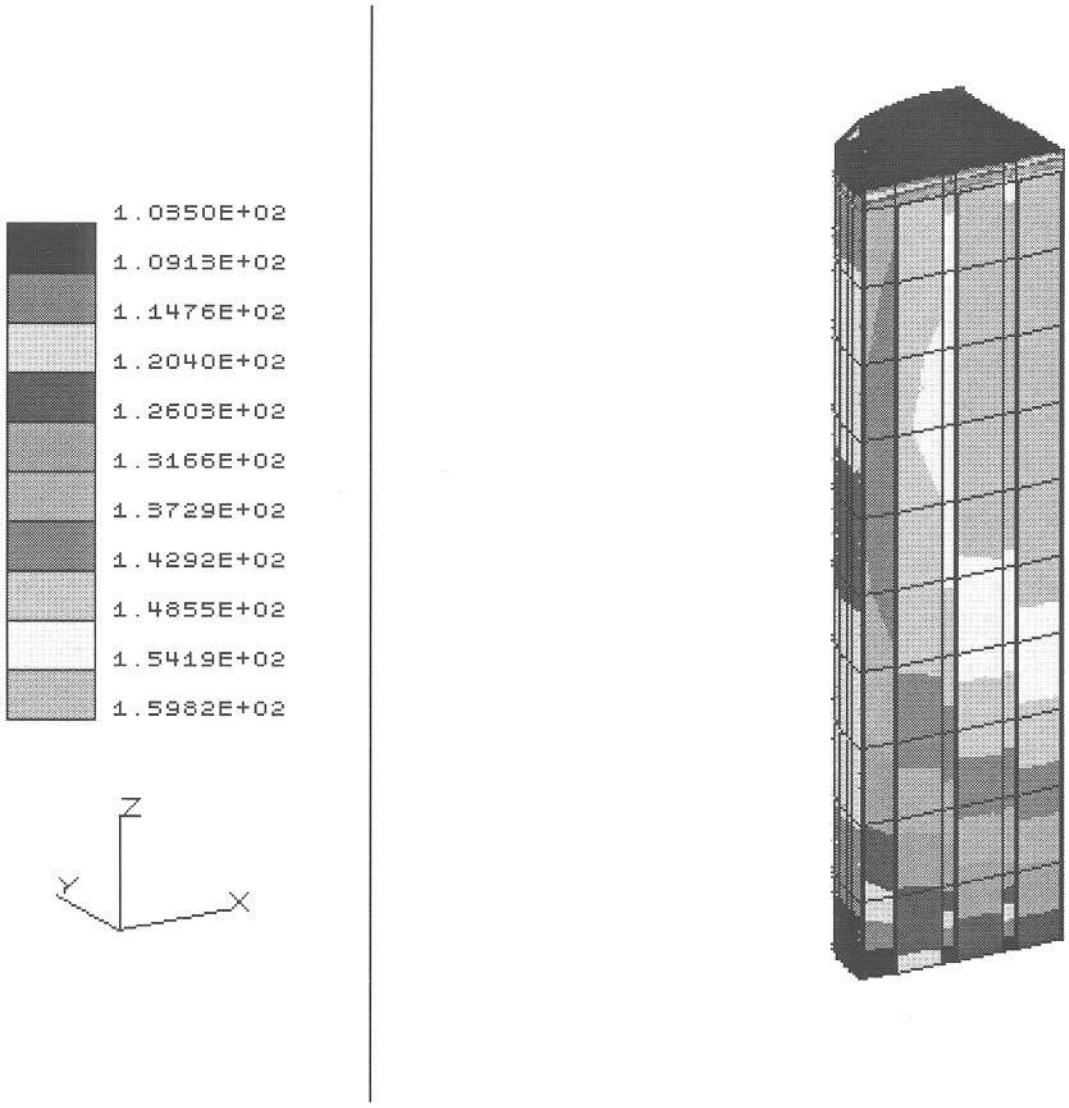

Figure 3.16. Steady-State Thermal Analysis — Fuel Divider with Fuel Elements -40°F Ambient with Maximum Decay Heat and No Insulation

C14

3.5 HYPOTHETICAL ACCIDENT THERMAL EVALUATION

After a free drop through 30 feet and a free drop through four feet onto a cylindrical punch, the package should be exposed to a fire transient. This thermal test consists of exposure of the whole package for not less than 30 minutes to a radiation environment of 800°C (1,475°F) with an emissivity coefficient of at least 0.9. The surface absorptivity of the package is taken as 0.8, and a convective heat input based on still ambient air at 800°C (1,475°F) is applied. The transient is then continued until maximum temperature values within the cask are obtained [3.18].

The thermal performance of the package during the fire transient is evaluated using the finite element program LIBRA. In this evaluation, the properties were updated every time step by a user-originated subroutine. This subroutine contains expressions relating element properties to temperature. Thermal properties as well as density and heat capacitance are updated periodically. The time step for the 0 to 1.0 hour range is set at 0.6 minute, while the time step for 1.0 to 3.0 hours is set at 4.0 minutes. The LIBRA program allows the user to select the time marching scheme. In this analysis, the backward difference scheme is selected for mathematical stability of the finite element model.

3.5.1 Analytical Model

The analytical models (Package and Divider) used to evaluate the hypothetical accident condition are identical to that described in Subsection 3.4.1. The Package model accounts for damage during the accidental condition by not including the toroidal shells.

3.5.2 Package Conditions and Environment

During the drop events the toroidal shell of the overpack structure will collapse, absorbing the kinetic energy of the event. Therefore, the Package model described in Subsection 3.4.1.1 does not include the toroidal shells.

3.5.3 Package Temperatures

Temperature values at several locations within the Package model are provided in Figures 3.17 through 3.22 for time steps for 0.5 to 3.0 hours during the fire transient. The analysis results of the Divider model are shown as contour plots in Figures 3.23 and 3.24 for 0.5 and 3.0 hours, respectively. Temperature versus time plot from the Package Model is provided in Figure 3.25.

3.5.4 Maximum Internal Pressures

The maximum internal pressure is reached at the maximum cavity temperature, which occurs around three hours after the fire. The helium temperature of 422°F is used to calculate the maximum internal temperature using the same methodology as discussed in Subsection 3.5.3.

The maximum internal pressure is calculated as:

$$P = (14.7 \text{ psia}) \cdot \left(\frac{422 + 460}{70 + 460}\right) = 24.5 \text{ psia}$$

3.5.5 Evaluation of Package Performance for the Hypothetical Accident

The temperature values obtained within the model during the fire transient are presented in Subsection 3.5.3. The temperatures evaluated are below the thermal design criteria of the material for each component. The highest lead temperature noted is 374°F. This temperature is way below the melting point of lead. The maximum temperature of any elastomeric component is 365°F. This temperature is provided around the cask drain port O-ring. The elastomeric material employed is capable of performing up to 400°F (see Reference [3.1], Subsection 4.4.1).

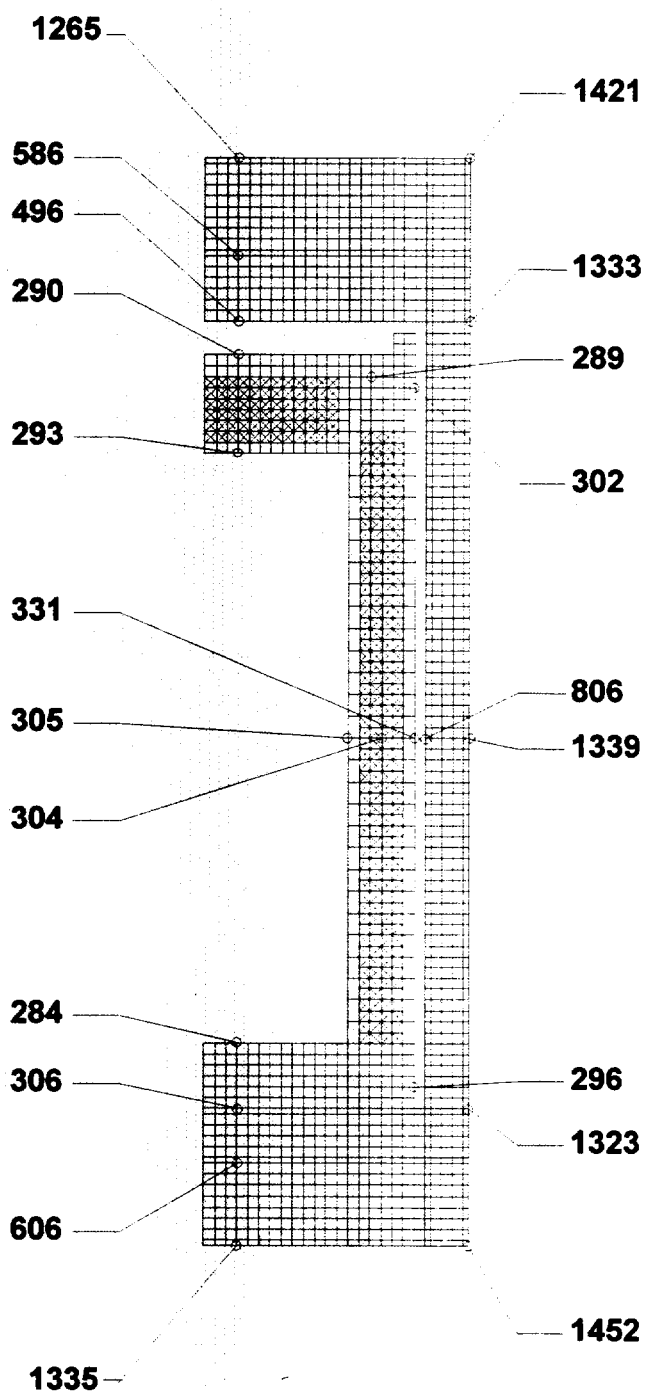

Figure 3.17. Transient Thermal Analysis — Fire Accident 100°F Ambient with Maximum Decay Heat and Maximum Insulation, Time: 0.5 Hr

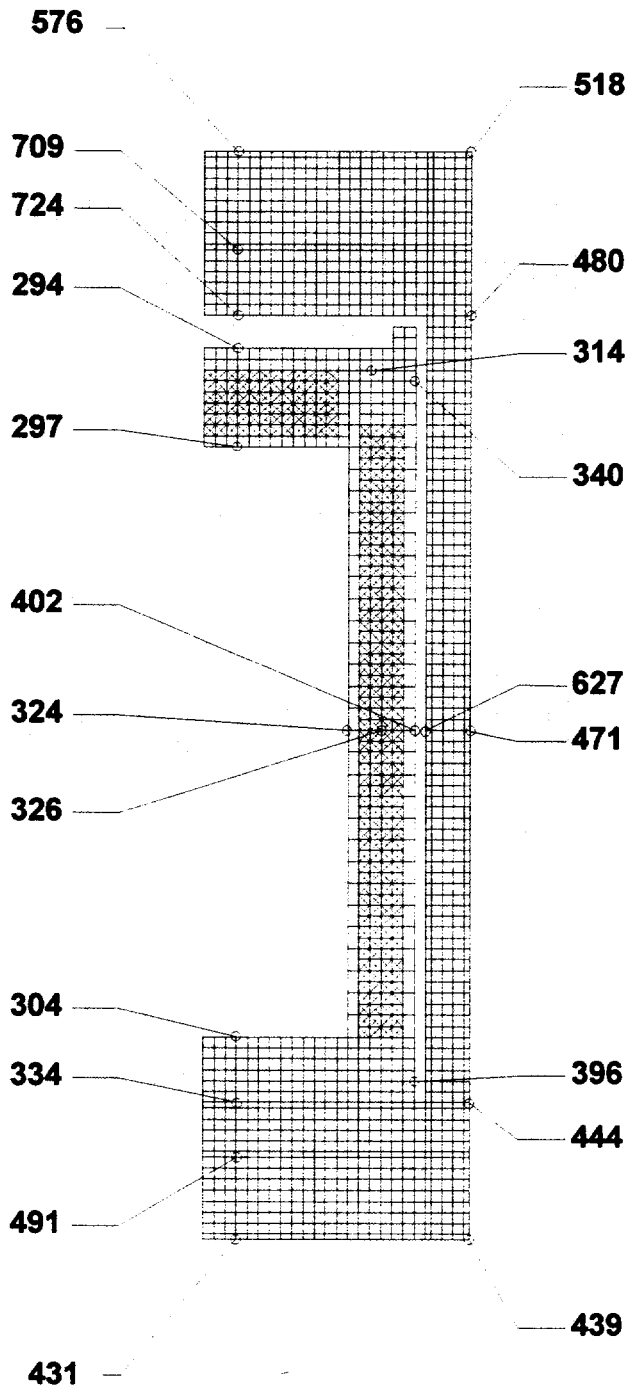

Figure 3.18. Transient Thermal Analysis — Fire Accident 100°F Ambient with Maximum Decay Heat and Maximum Insulation, Time: 1.0 Hr

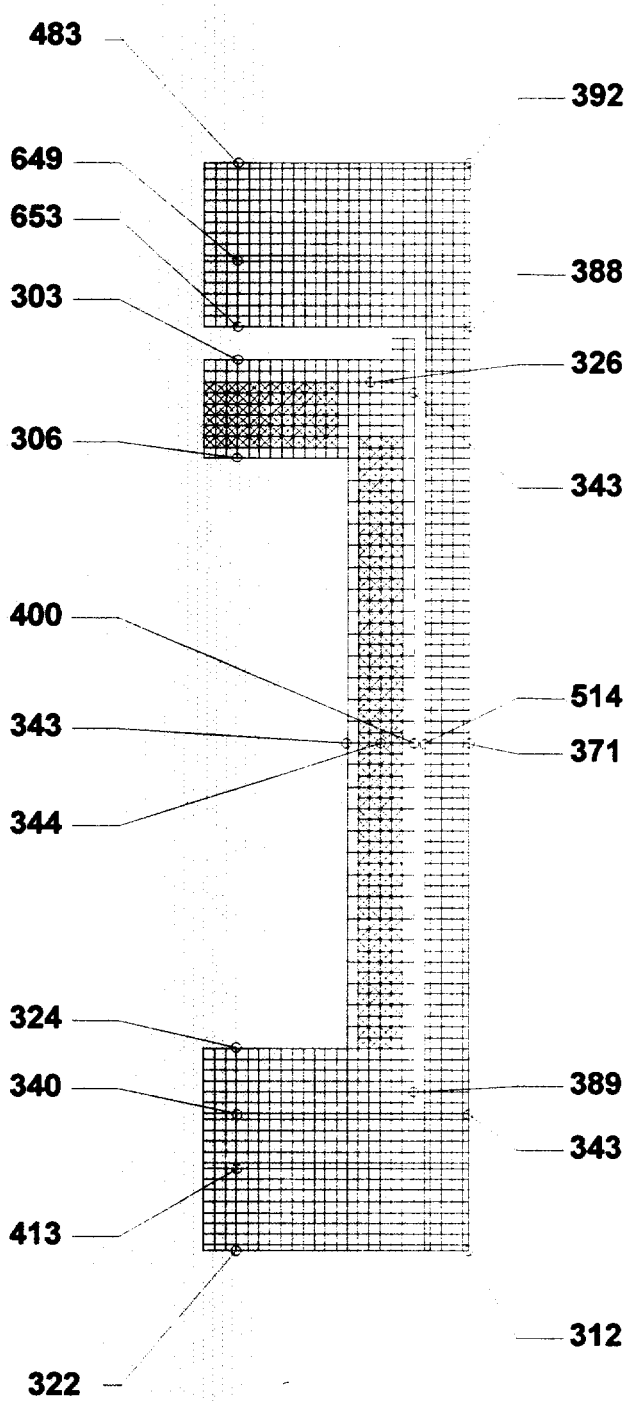

Figure 3.19. Transient Thermal Analysis — Fire Accident 100°F Ambient with Maximum Decay Heat and Maximum Insulation, Time: 1.5 Hr

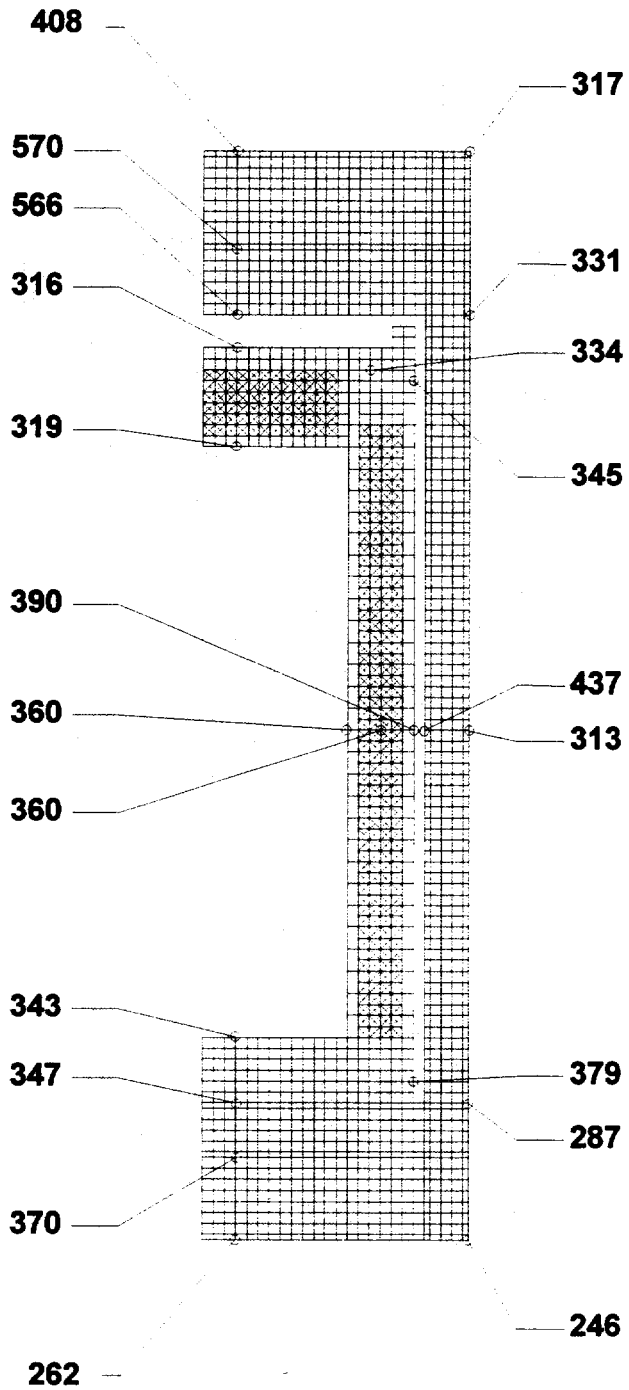

Figure 3.20. Transient Thermal Analysis — Fire Accident 100°F Ambient with Maximum Decay Heat and Maximum Insulation, Time: 2.0 Hr

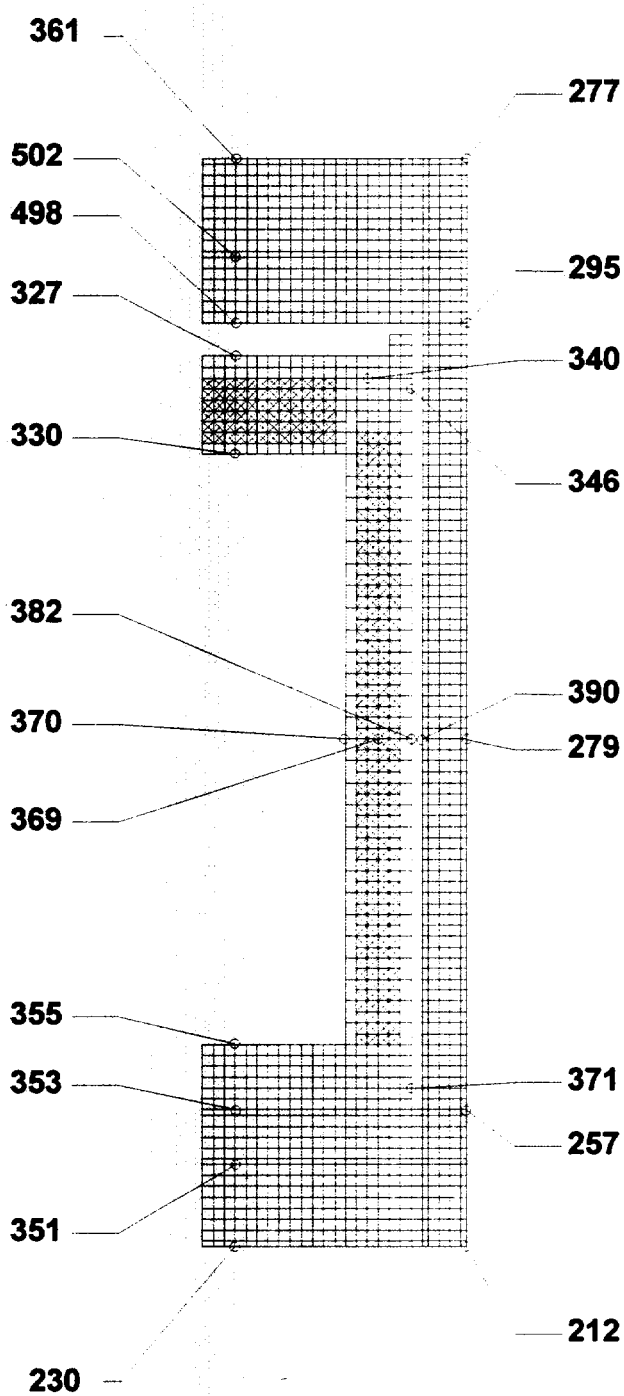

Figure 3.21. Transient Thermal Analysis — Fire Accident 100°F Ambient with Maximum Decay Heat and Maximum Insulation, Time: 2.5 Hr

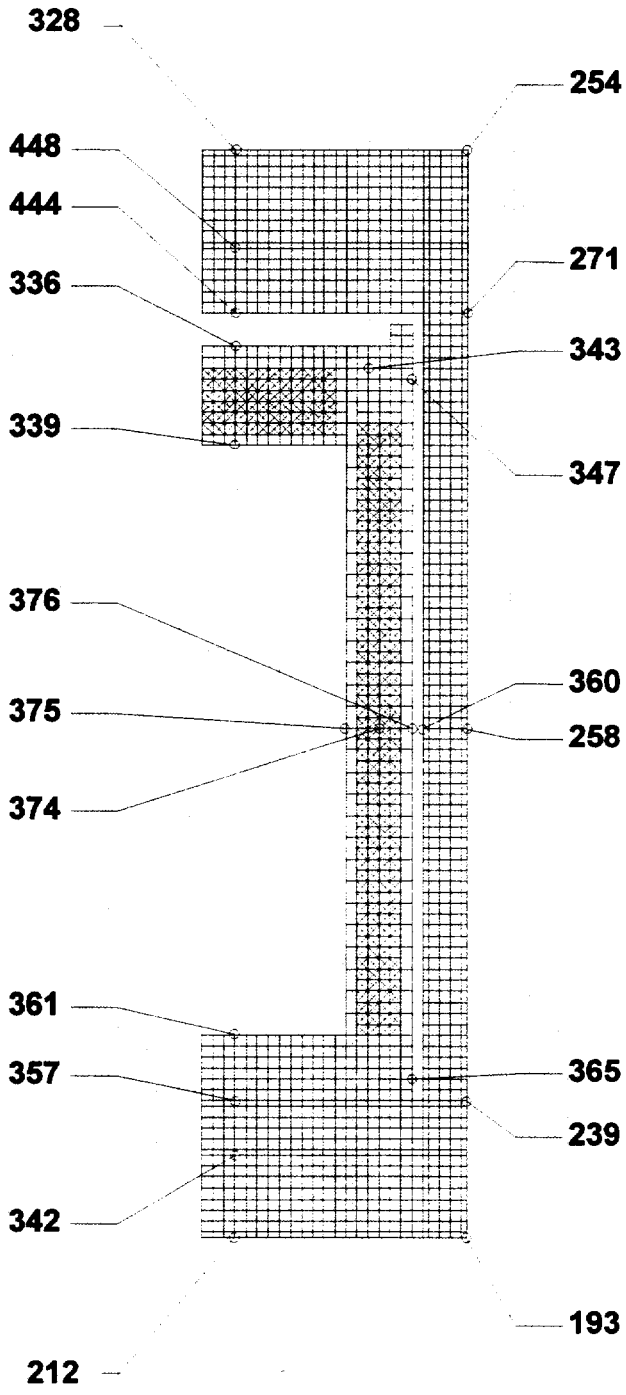

Figure 3.22. Transient Thermal Analysis — Fire Accident 100°F Ambient with Maximum Decay Heat and Maximum Insulation, Time: 3.0 Hr

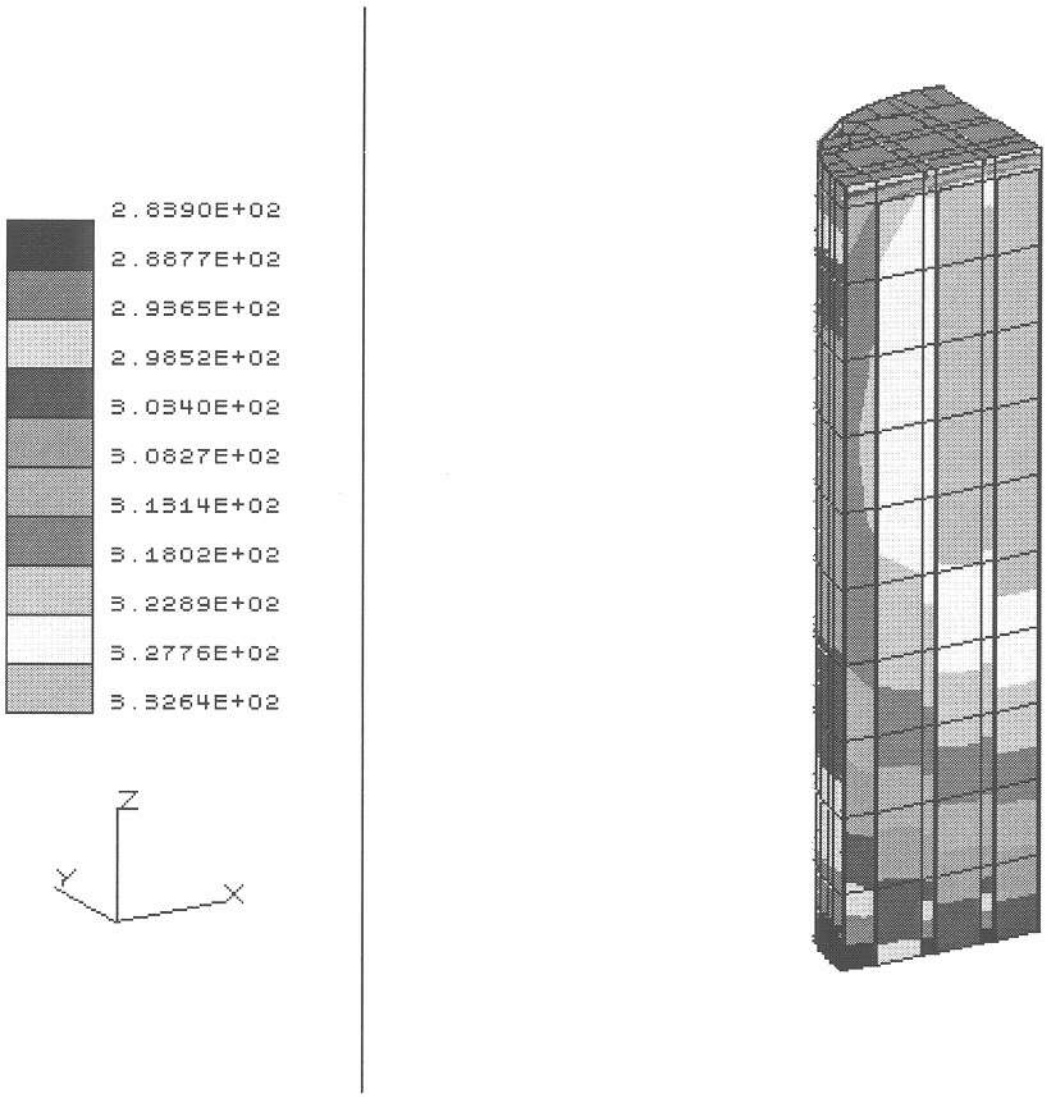

Figure 3.23. Contour Plot — Fuel Divider Model, Transient Thermal Analysis, Fire Accident 100°F Ambient with Maximum Decay Heat and Maximum Insulation, Time: 0.5 Hr

C15

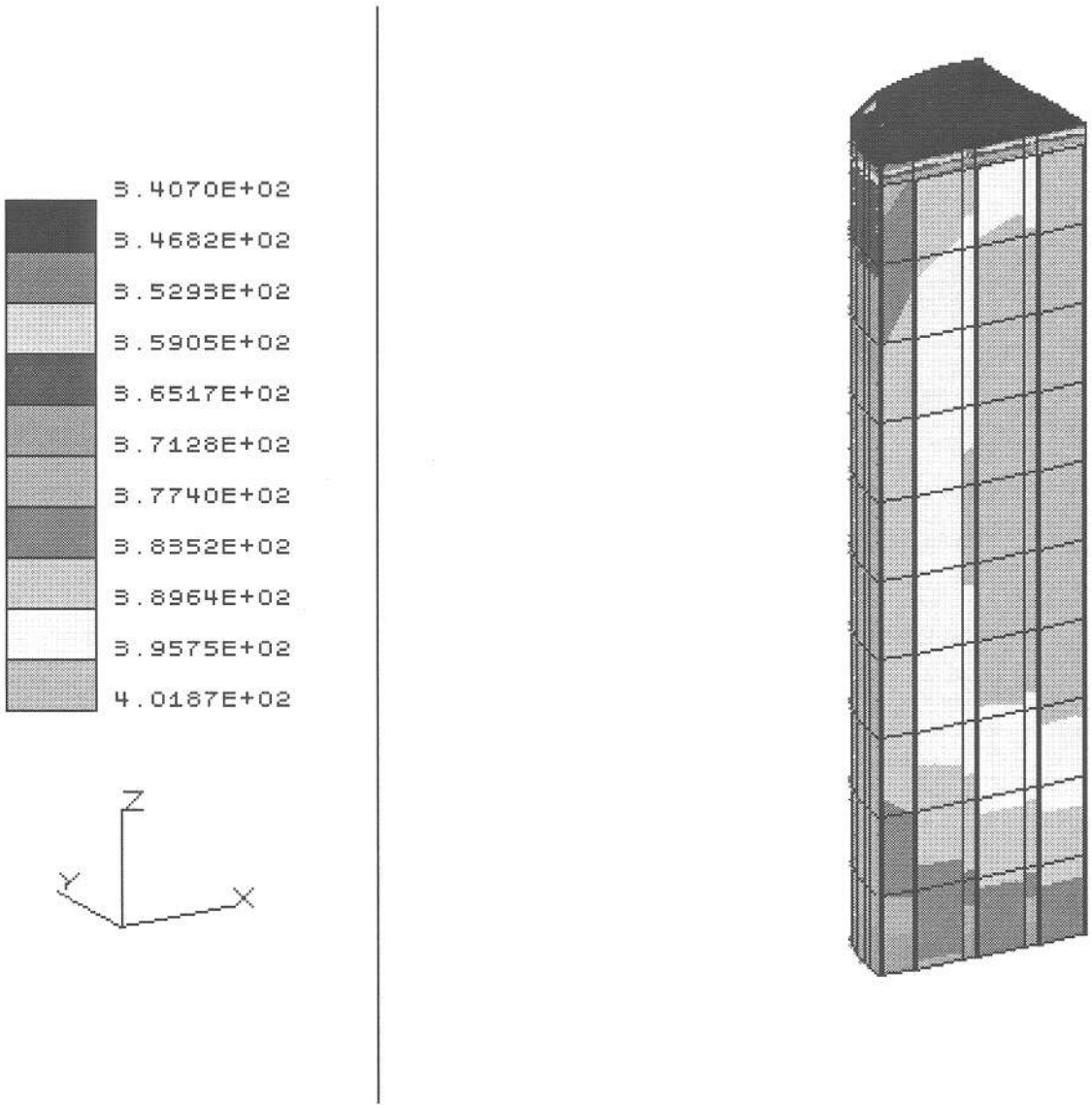

Figure 3.24. Contour Plot — Fuel Divider Model, Transient Thermal Analysis, Fire Accident 100°F Ambient with Maximum Decay Heat and Maximum Insulation, Time: 3.0 Hr

C16

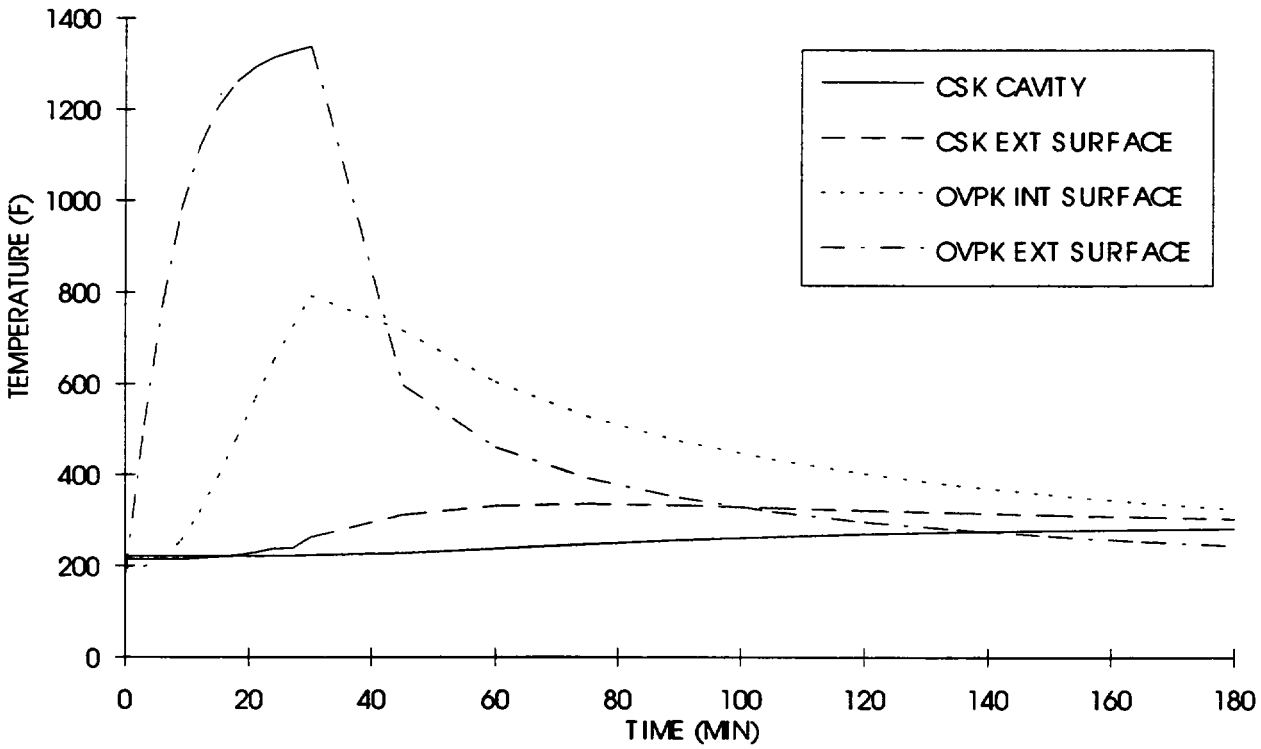

Figure 3.25. Temperature vs. Time, Fire Accident Transient — Overpack and Cask

3.6 REFERENCES

[3.1] Safety Analysis Report, "Model 2000 Radioactive Material Transport Package 2000 Watts Decay Heat Upgrade Safety Analysis Report", NEDO-32318, July, 1994.

[3.2] Touloukian, Y. S., "Thermophysical Properties of Matter", Purdue University, 1970, Vol. 1, p. 191.

[3.3] Ibid, Vol. 4, p. 115.

[3.4] "Heat Transfer Data Book", D. A. Kaminski, Ed.; General Electric Company, New York, 1981, Sct. G515.29, p. 5.

[3.5] ASME, "Boiler and Pressure Vessel Code", Section III, Division I, Appendix I, 1980.

[3.6] Kreith, F., "Principles of Heat Transfer", International Textbook Company, Pennsylvania, 2nd Ed., 1969, Table A-3.

[3.7] Ibid, Table A-1.

[3.8] Morris and Wendel, "HFIR System RELAP5 Input Model", Oak Ridge National Laboratory, ORNL/TM-11647, January, 1993.

[3.9] "Heat Transfer Data Book", D. A. Kaminski, Ed.; General Electric Company, New York, 1981, Sct. G515.5,

[3.10] USNRC Rules and Regulation, 10CFR71, "Packaging and Transportation of Radioactive Material", November, 1992.

[3.11] Gebhart, B., "Heat Transfer", McGraw-Hill Book Company, New York, 2nd Ed., 1971, p. 377.

[3.12] Ibid, p. 355.

[3.13] Ibid, p. 376.

[3.14] Kreith, F., "Principles of Heat Transfer", International Textbook Company, Pennsylvania, 2nd Ed., 1969, Table 5-2.

[3.15] Gebhart, B., "Heat Transfer", McGraw-Hill Book Company, New York, 2nd Ed., 1971, p 371.

[3.16] Kreith, F., "Principles of Heat Transfer", International Textbook Company, Pennsylvania, 2nd Ed., 1969, p. 340.

[3.17] K. Yi and V. Quann, "Thermal Test — GE Model 2000 Transport Package", GE Document No NEDO-32275, May, 1993.

[3.18] USNRC, Regulatory Guide 7.8, "Load Combinations for the Structural Analysis of Shipping Cask", May, 1977.

[3.19] R. Byron Bird, Warren E. Stewart, and Edwin N. Lightfoot, "Transport Phenomena", John Wiley and Sons, Inc., New York, 1st Ed., 1971, p. 304.

[3.20] N. Tomsio, "Characterization of Triga Fuel", GA Technologies Report, ORNL/Sub/86-22047/3, GA-C18542, October, 1986.

[3.21] Metal Handbook, Vol. 1, "Properties and Selection of Metals", American Society for Metals, Ohio, 8th Ed., 1961, p. 1228.

[3.22] Design Data, "Heat Transfer and Fluid Flow", General Electric Company, New York, 1986, Section 515.29.

3.7 APPENDIX

3.7.1 Thermal Test on GE Model 2000 Transport Package [3.17]

A thermal test has been conducted on a GE Model 2000 Transport Package. The objective of the test is to verify the thermal analytical model by comparing the analytical results to those of the physical testing [3.2]. The testing is done at ambient conditions with 600 and 2000 watts heat input in the cask cavity to simulate the maximum decay heat. The test also demonstrates the capability of the Model 2000 to safely dissipate 600 and 2000 watts of decay heat.

The thermal test is performed by placing an electric heat source concentrically within the cask cavity. Thirteen temperature sensing devices are placed within the cask cavity, on the external surfaces of the cask, and on the overpack surfaces. In the radial direction, temperatures measured include the cask cavity air, internal cask wall, external cask wall, overpack inside surface, and the overpack external surface. In the axial direction, the temperatures measured include the cask cavity floor, the bottom cask surface, below the lower honeycomb pad, at the bottom of the overpack, at the top of the cask cavity (under the lid), at the gasket lower surface, at the top of the lid, and at the top of the overpack. Three additional transducers record the external ambient temperature. The temperature data are recorded at 30 minute intervals during the transient until a steady state condition is reached (temperatures remain significantly unchanged for a one hour period).

The LIBRA finite element model used for this evaluation is the same model used in the original application except that the contents (fuel, basket, and liner) are not included. Heat loading of 600 and 2000 watts is uniformly distributed in the cask internal walls. Temperatures at various points of the cask are calculated and continuously monitored during the over forty-hour simulation.

Differences between the test and the model temperatures are 3% in the cask cavity, 1% at the cask outer wall, 5% at the overpack inner wall, and 1% at the overpack outer wall. Test data and the LIBRA predictions of cavity wall temperature versus time for the 2000 watt case are plotted in Figure 3.35: excellent correlation between test and analysis results is displayed. The physical test verifies the adequacy and accuracy of the LIBRA finite element thermal analysis model of the Model 2000 Package.

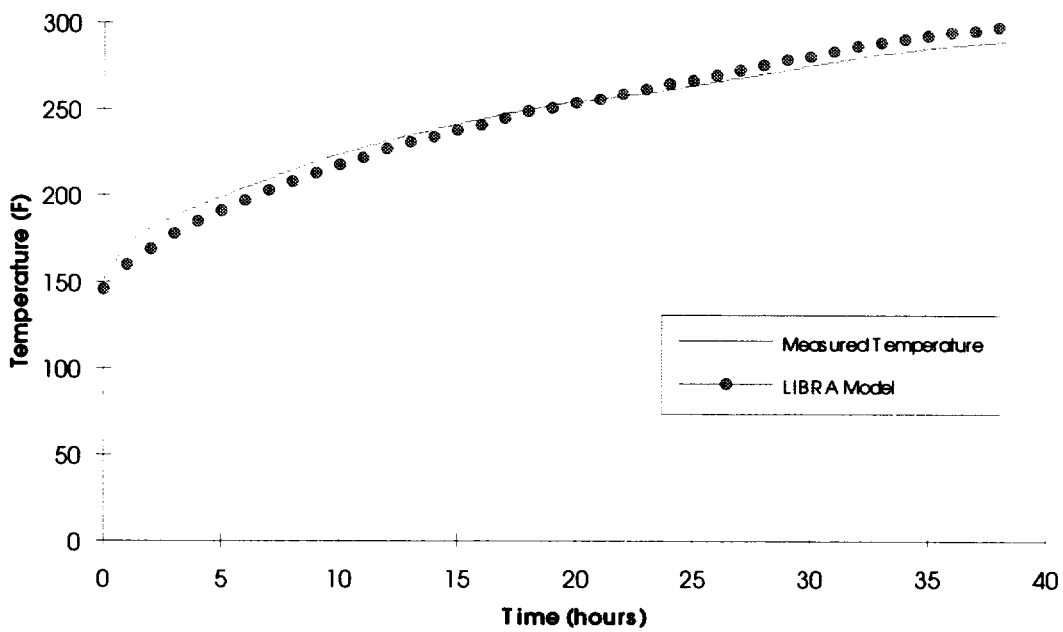

Figure 3.26. Cavity Wall Temperature — Thermal Test Versus LIBRA Model Model 2000 Transport Package with 2000 Watts Heat

3.7.2 Thermal Evaluation of TSR Fuel Basket

The thermal analyses of the Model 2000 Transport Package with the TSR Fuel Basket are described in this Appendix.

The TSR fuel core consists of 25 sub-assemblies of aluminum-clad fuel matrix assembled to form a sphere. The total fuel loading of the TSR fuel core assembly is 8451 gm of U^{235}. The TSR fuel core, the only one in existence, and four additional sub-assemblies referred as "lune plates" (currently in storage), shall be transported in a minimum of two shipments. Each additional lune plate contains 59 gm of U^{235}. The reactor core operated at 1 Mw of power, for a total burnup of 2000 MwH. The decay heat after 450 days cooling is calculated, using RIBD, to be 35 watts.

The thermal analysis assumes that the cask cavity is dry and has one atmosphere of helium, which is the normal shipping mode. This analysis demonstrates that the Model 2000 Transport Package with the TSR fuel positioned in the basket provides suitable heat dissipation to maintain the temperature distribution of the Package within the limits established in this Safety Analysis Report.

3.7.2.1 Discussion

The Radial Heat Transfer (RHT) program is used to evaluate fuel element temperature for the TSR fuel during shipment. RHT [3.19] is a steady-state, radial heat transfer program that evaluates temperature distributions through concentric shells (homogeneous regions like metal tubes, etc.). The program is written in BASIC and has the following features:

A. Modes of heat transfer available: conduction, forced or free convection, free convection plus radiation, or radiation only.

B. Built-in Nusselt number correlation for convection.

C. Built-in temperature dependent property library for 28 common materials. Materials not contained in the library can be added.

D. Any shell can be composed of a mixture of two or more materials.

E. Internal heating and/or contact resistance may be specified for any shell.

Since the thermal properties of most materials change with temperature, calculating the temperature difference for a cylindrical shell becomes a trial-and-error procedure. The program computes the temperature change through a shell by evaluating the thermal properties at an estimated temperature. The computed temperature change is then compared with the estimated change and if the difference is greater than the specified tolerance, a new temperature is estimated using the method-of-secants. This procedure is repeated until the convergence criterion is satisfied or (a) more than 20 iterations have been completed or (b) the temperature change has been diverging for two consecutive trials. If either conditions (a) or (b) is obtained, the program temporally expands the convergence criterion to 0.1% of the temperature change through the shell and again checks for convergence.

An RHT model is prepared using seven concentric shells. The TSR fuel is assumed to be homogenized in a shell and sandwiched in helium shells. The maximum decay heat content of the fuel is 35 watts. For the purpose of calculating the temperature distribution in the fuel during transport, the model used this value. The 35 watt value used is conservative, considering that each shipment will contain only a portion of the total core and the additional lune plate sub-assemblies. The heating values are specified in either watts/gram or kW/ft. The RHT program results indicate temperature difference of approximately 2°F between the fuel element and the cask cavity. Therefore the temperature effects on either the TSR fuel or the TSR basket are neglected.

3.7.3 Thermal Evaluation of the MTR Divider with an Air-Filled Cask Cavity

The cask cavity is filled with one atmosphere of helium before shipping. Thermal analyses of the cask cavity filled with helium is presented in Section 3. Since it is permeable, helium may escape from the cask during shipment. This appendix repeats the analyses of Section 3 using air instead of helium within the cask.

The principal design operating and performance characteristics of the Model 2000 Transport Package with the MTR-type fuel with 1500 watts of decay heat are within the limits previously established. The maximum fuel cladding temperature for the design basis of the MTR-type fuel is 400°F under normal transport conditions, and 430°F in accident conditions. The maximum fuel cladding temperature found with an air-filled cask cavity is 394°F for normal conditions and 422°F for accident conditions.

Results of the thermal evaluation are presented in Table 3.1. The cask and overpack temperatures were obtained by applying 1500 watts of heat uniformly distributed along the cask cavity wall of the 2-D Package Model. Therefore the performance of the Packaging under 1500 watts of decay heat from its contents is independent of the gas (helium or air) present in the cavity. However, the 3-D Divider Model includes helium, hence MTR fuel element and divider temperatures are affected by the assumption of an air-filled cask.

3.7.3.1 Thermal Properties of Fuel Material (Al + Fuel Meat + Air Composite)

Thermal properties for the MTR composite fuel material was calculated for air using the methodology described in Section 3.4.1.10. The resulting thermal properties are summarized below.

Specific Heat, Cp(Btu/lb-°F)

Table 3.8. Temperature Versus Specific Heat (with Air)

Temp °F	Cp(Btu/lb-°F)
80	0.274
440	0.319
980	0.385
1205	0.419

Conductivity, k (Btu/hr-in-°F)

$$k = 2.927$$

Density, ρ (lb/in^3)

$$\rho = 0.073$$

Specific Heat, Cp (Btu/lb-°F)

$$Cp(T) = 0.2631 + 0.0001\ T \qquad 80°F < T < 1205°F$$

3.7.3.2 Thermal Evaluation for Normal Conditions of Transport

Maximum Temperatures

Under normal conditions of transport, the maximum temperature distribution in the Model 2000 Transportation Package occurs when the ambient temperature is 100°F, with maximum decay heat and the maximum solar load. With the air-filled cask cavity assumption, the maximum temperature is 394°F. Figures 3.27 and 3.28 are contour plots of the Divider model with and without solar load, respectively.

Maximum Internal Pressures

The cask cavity is assumed to be filled with air at 15 psia and ambient temperature (70°F). Under normal conditions of transport, the maximum temperature of the air inside the cavity occurs near the fuel element. Although the average temperature of the air is less, the worst case fuel surface temperature of 394°F is used as the air temperature to calculate the maximum internal pressure.

Using the ideal gas law, the temperature and pressure relationship is, for a constant volume,

$$\frac{P_1}{T_1} = \frac{P_2}{T_2}$$

where P_1 and T_1 = Pressure and Temperature at initial state, respectively.

P_2 and T_2 = Pressure and Temperature at steady state, respectively

Therefore the maximum internal pressure during normal transportation is calculated as

$$P2 = (14.7\ \text{psia}) \cdot \left(\frac{394 + 460}{70 + 460}\right) = 23.7\ \text{psia}$$

Temperature values throughout the package components associated with normal conditions of transport are all within the allowable limits for the respective materials. The cavity pressure due to air at the maximum cavity temperature of 394°F is less than the cask design pressure of 30 psia.

3.7.3.3 Hypothetical Accident Thermal Evaluation

The hypothetical accident thermal evaluation of Section 3.5 was repeated with an air-filled cask. Analysis results of the Divider model are shown as contour plots in Figures 3.29 and 3.30 for time steps 0.5 and 20.0 hours, respectively. Figure 3.31 is a plot of fuel temperature versus time for the fire accident transient.

The maximum internal pressure is reached at the maximum cavity temperature, which occurs at 20.0 hours after the fire. An air temperature of 422°F is used to calculate the maximum internal temperature using the same methodology as discussed in Section 3.7.3.2.

The maximum internal pressure is calculated as:

$$P2 = (14.7 \text{ psia}) \cdot \left(\frac{422 + 460}{70 + 460}\right) = 24.5 \text{ psia}$$

Temperature values throughout the package components associated with the hypothetical accident conditions are within the allowable limits for the respective materials. The cavity pressure due to air at the maximum cavity temperature of 422°F is less than the cask design pressure of 30 psia.

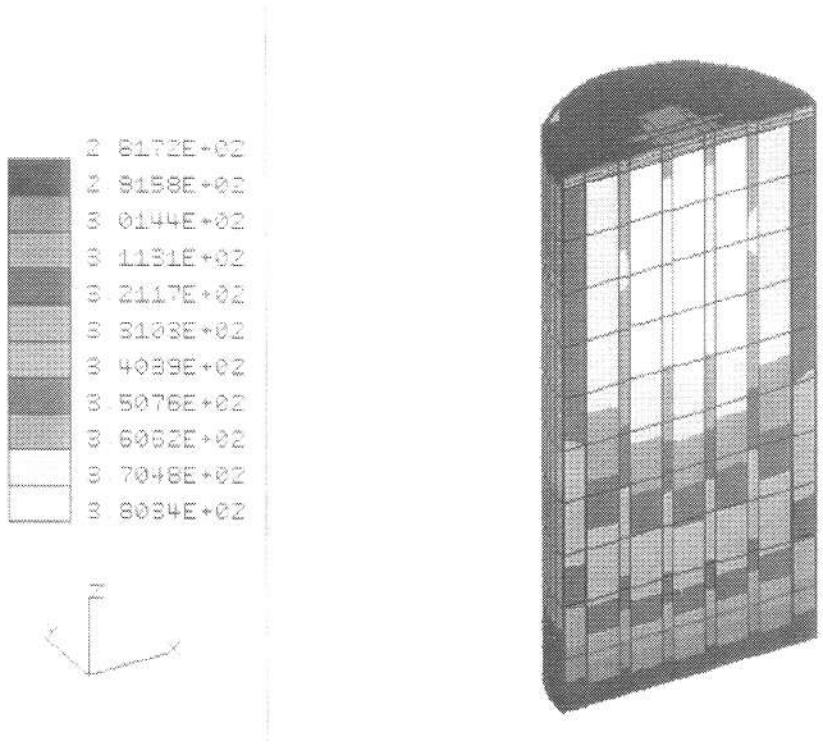

Figure 3.27. Steady-State Thermal Analysis — Fuel Divider with Fuel Elements, 100°F Ambient with Maximum Decay Heat and Maximum Insulation

C17

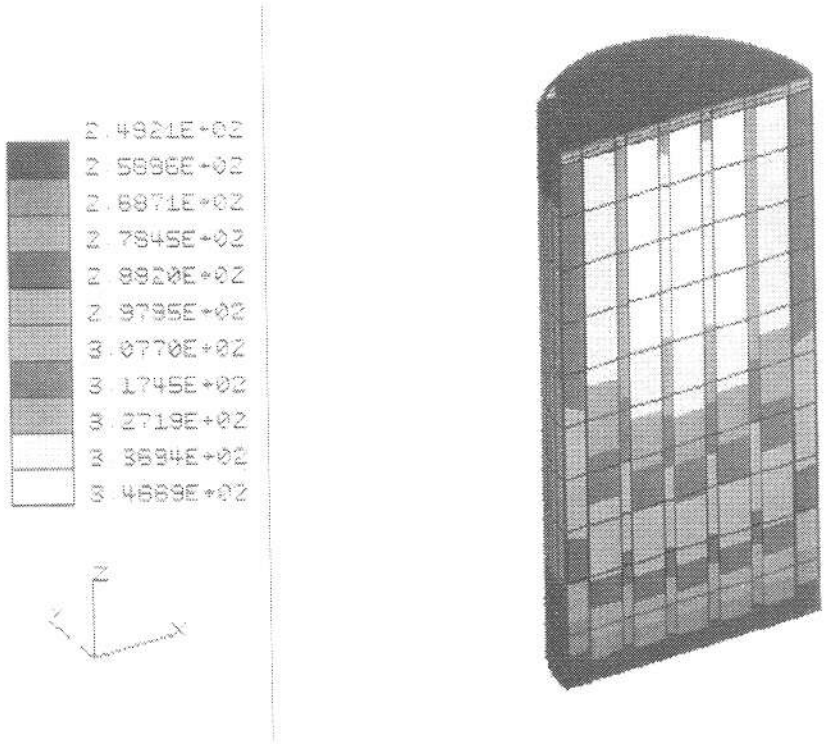

Figure 3.28. Steady-State Thermal Analysis — Fuel Divider with Fuel Elements, 100°F Ambient with Maximum Decay Heat

C18

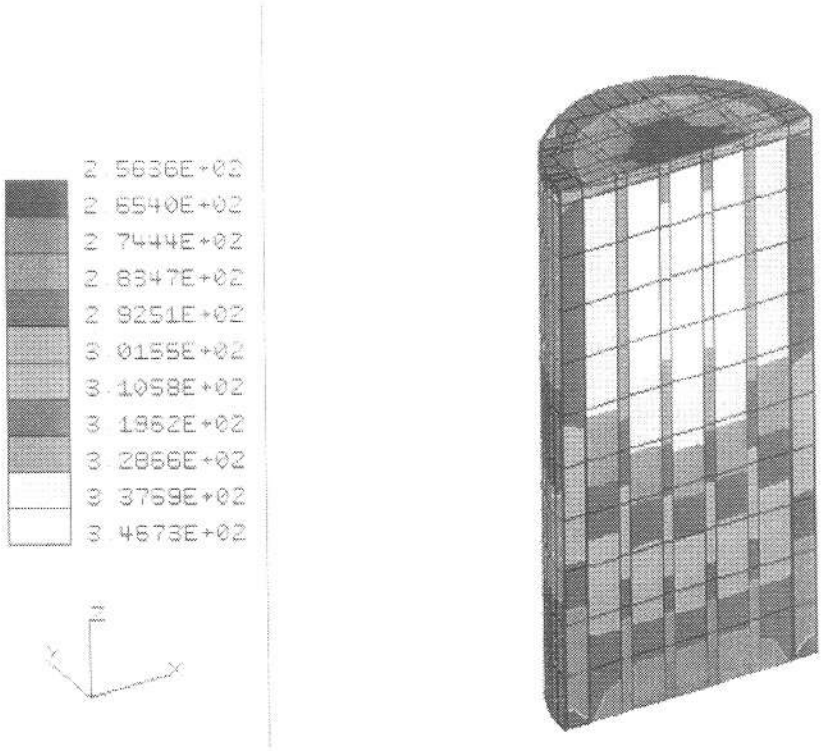

Figure 3.29. Contour Plot — Fuel Divider Model, Transient Thermal Analysis, Fire Accident, 100°F Ambient with Maximum Decay Heat and Maximum Insulation, Time: 0.5 Hr

C19

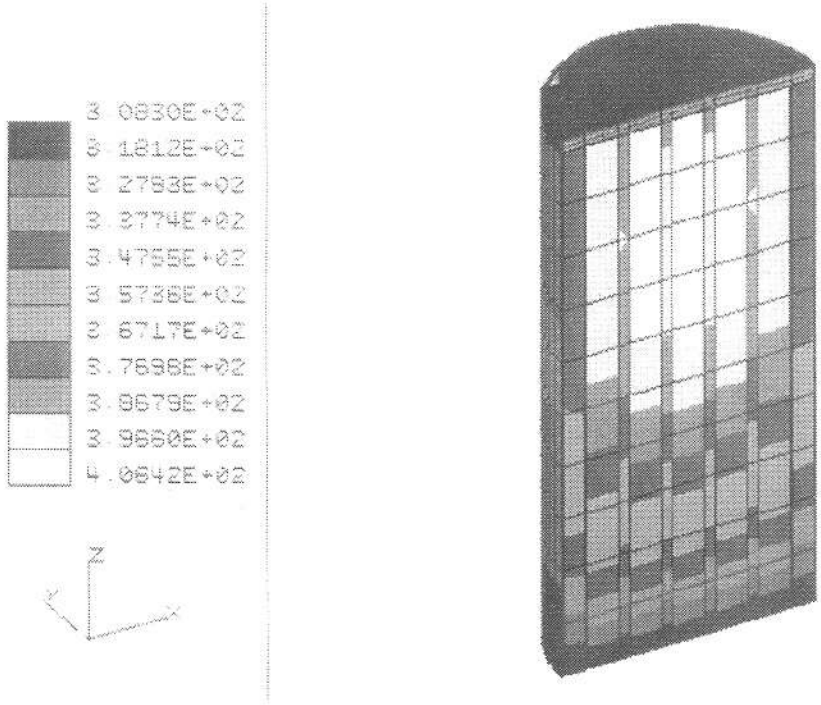

Figure 3.30. Contour Plot — Fuel Divider Model, Transient Thermal Analysis, Fire Accident 100°F Ambient with Maximum Decay Heat and Maximum Insulation, Time: 20.0 Hr

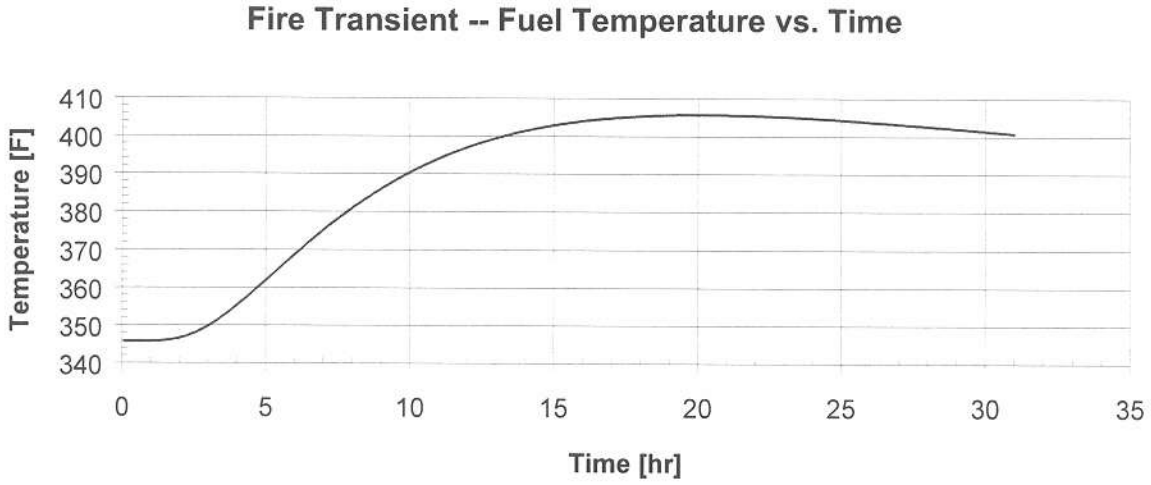

Figure 3.31. Fire Accident Transient,. Fuel Temperature vs. Time

C20

3.7.4 Thermal Evaluation of Case 2 and Case 3 Fuel Loadings.

This evaluation covers the thermal performance of the MTR-type fuel divider inside the Model 2000 Packaging when loaded with the MTR-type generic fuel elements in two different fuel loading configurations under regulatory environments. The principal design operating and performance characteristics of the Model 2000 Transport Package with the MTR-type fuel with 1500 watts of decay heat are within the limits previously established. The maximum fuel cladding temperature for the design basis of the MTR-type fuel is 400°F under normal transport conditions, and 430°F[(1)] under accident conditions.

In Case 2, the evaluation assumes that fuel with a maximum heat content of 35 watts is located in all 21 upper region cells of the divider and that all 9 lower region inner cells are filled with fuel with a maximum heat content of 85 watts each. See Figure 3.32. The maximum fuel cladding temperature found with an air-filled cavity and this fuel loading arrangement is 394°F for normal conditions and 422°F for accident conditions. This distribution of the fuel within the divider inside the Model 2000 cask, results in the highest temperature in the fuel cladding under normal conditions.

Case 3 loading considers the placement of 85 watts fuel in 18 cells in the lower region of the divider (all 9 inner cells and any 9 of the outer cells). See Figure 3.33. The maximum fuel cladding temperature found with an air-filled cavity and this fuel loading arrangement is 358°F for normal conditions and 422°F for accident conditions. This condition produces the higtest temperature in the fuel cladding under accident condition.

Results of the thermal evaluation for each of these loading cases are presented in Table 3.1A and Table 3.1B for Case 2 and Case 3, respectively. The cask and overpack temperatures were obtained by applying 1500 watts of heat distributed along the cask cavity wall of the 2-D Package Model comparable to the distribution produced by each of the cases. For Case 2, the heat flux applied to the model were 765 watts along the bottom half of the wall cavity and 735 watts along the upper region. For Case 3, all 1500 watts were applied to the bottom half region of the cavity. Similar distribution was applied to the 3-D Divider Model for each of the cases. However, because of the 3-D nature of the model these heat distributions were obtained by changing the heat per unit volume (q, Btu/hr/in^3) of the elements representing the fuel. The calculation of the heat per unit volume for each of the cases is presented in paragraph 3.7.4.1.

Case 2 and Case 3 were selected because they represent the upper limits for the fuel distribution of 120 watts maximum per fuel cell, limited to 35 watts in the upper region and 85 watts in the lower region of the fuel cell.

Notes: (1) The Criticality evaluation presented in Chapter 6 does not depend on the structural integrity of the fuel to maintain subcriticality therefore, some degradation of the material properties of the fuel cladding material (Al) is acceptable.

Case 2 addresses the case where all 21 upper region cells are occupied with 35 watts fuel while all 9 lower region inner cells are filled with 85 watts fuel. This arrangement concentrates the maximum decay heat in areas within the divider of poor heat conductivity while exposing components such as the cask seal to the maximum heat flux. Case 2 results indicate that the 35 watts maximum per fuel cell in the upper region of the divider are within the thermal performance limits previously established.

Case 3 is a limiting case for the 85 watts per cell in the lower region of the divider. In this case, the 85 watts fuel occupied all 9 inner cells and 9 of the outer ones for a total of 1530 watts. It is recognized that this loading exceed the 1500 watts per shipment limit, but the extra heat content adds conservatism to the evaluation. By placing all the fuel in the lower region and toward the center of the divider, low heat conduction between the fuel, divider and cask cavity walls is assured. Again, the results of this evaluation are within the established limits.

3.7.4.1 Heat Input

The total decay heat per shipment for the transportation of MTR-type and TRIGA-type fuels in the divider is 1500 watts.

For brick elements, used in the Divider model, LIBRA requires the heat input to the model to be in the form of heat density, i.e., total heat divided by the element's volume. The heat in each fuel element is assumed to be uniformly distributed throughout the element body. The heat density values used in the finite element model are calculated as follows:

$$q = \frac{\text{Heat Loading}}{\text{Fuel Volume}}$$

For Case 2:

Upper Region

$$q = \frac{735\ (\text{Watts}) \times (3.412\ \text{BTU / hr - Watts})}{21(\text{elements}) \times 3.375\ (\text{in}) \times 3.025\ (\text{in}) \times 26\ (\text{in})}$$

$$= 0.4500\ \text{Btu/hr-in}^3$$

Lower Region

$$q = \frac{765\ (\text{Watts}) \times (3.412\ \text{BTU / hr - Watts})}{9(\text{elements}) \times 3.375\ (\text{in}) \times 3.025\ (\text{in}) \times 26\ (\text{in})}$$

$$= 1.0926\ \text{Btu/hr-in}^3$$

Similary, for Case 3:

Upper Region

$$q = 0.00 \text{ Btu/hr-in}^3$$

Lower Region

$$q = \frac{1530 \text{ (Watts)} \times (3.412 \text{ BTU / hr - Watts})}{18\text{(elements)} \times 3.375 \text{ (in)} \times 3.025 \text{ (in)} \times 26 \text{ (in)}}$$

$$= 1.0926 \text{ Btu/hr-in}^3$$

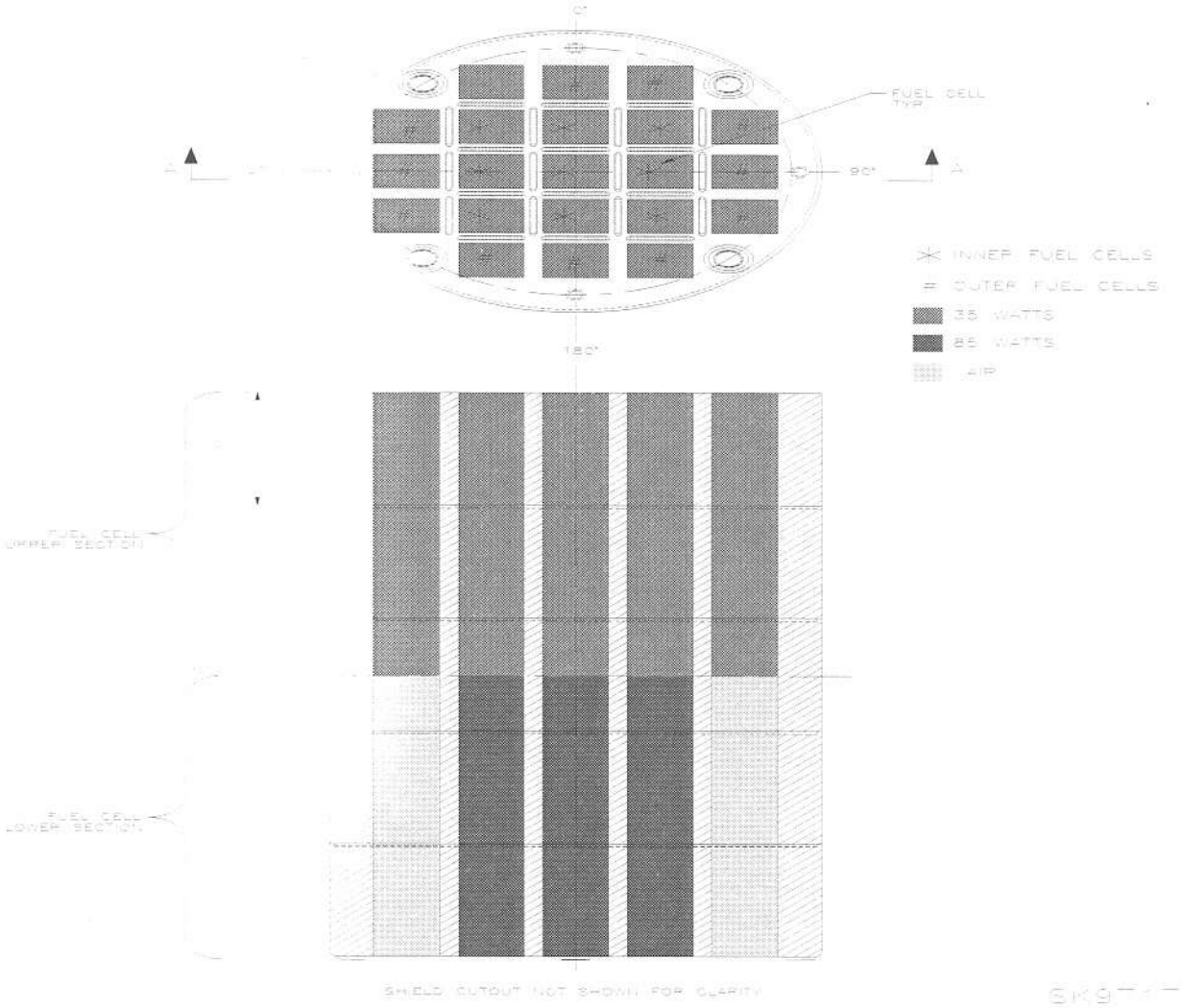

Figure 3.32. Case 2 — Fuel Loading

C21

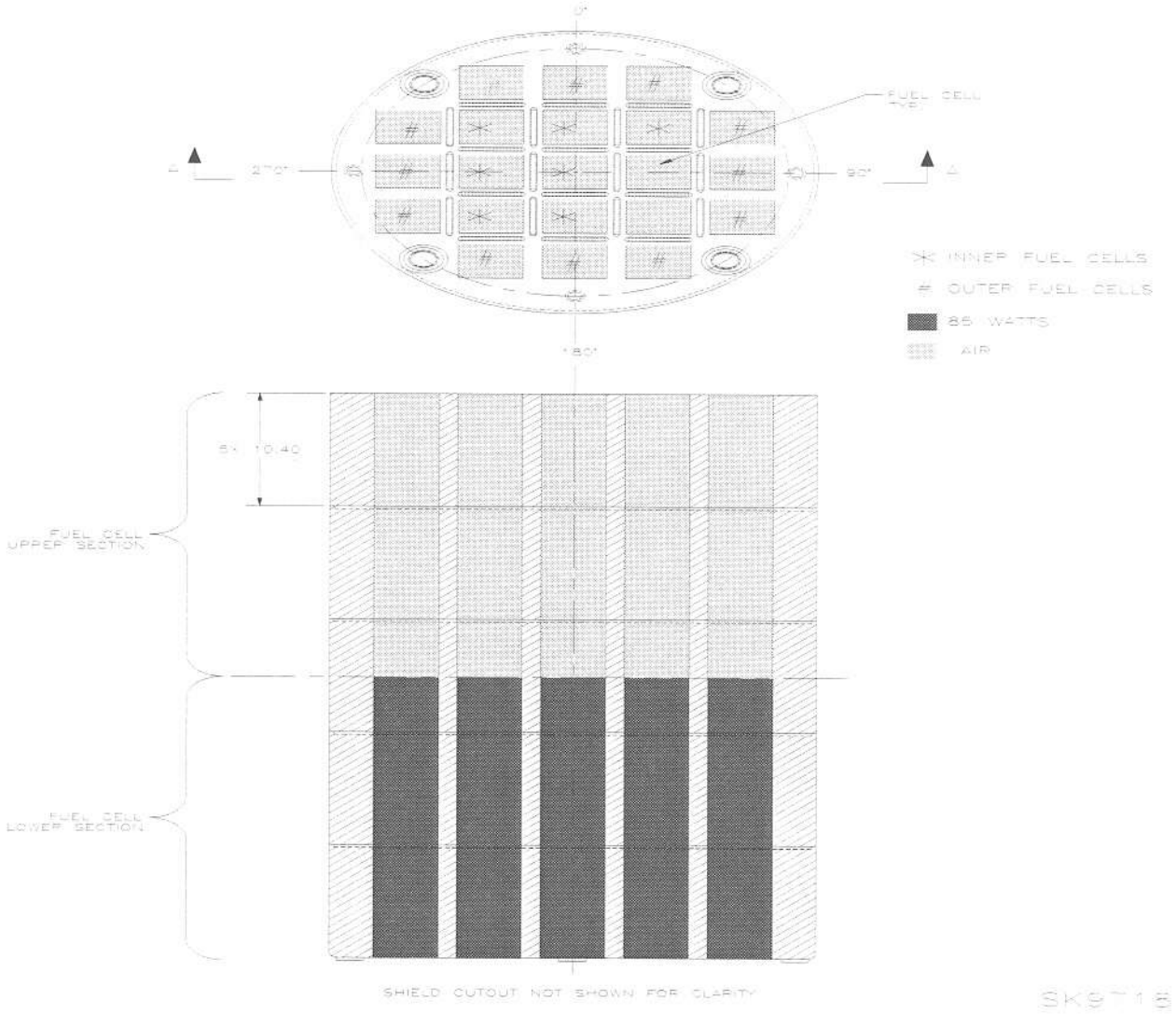

Figure 3.33. Case 3 — Fuel Loading

C22

3.7.4.2 Thermal Evaluation for Normal Conditions of Transport

Maximum Temperatures

Under normal conditions of transport, the maximum temperature distribution in the Model 2000 Transportation Package occurs when the ambient temperature is 100°F, with maximum decay heat and the maximum solar load. With the air-filled cask cavity assumption, the maximum temperature is 394°F. Figure 3.34 is a contour plot of the Divider model with and without solar load for Case 2 loading condition.

Maximum Internal Pressures

The cask cavity is assumed to be filled with air at 14.7 psia and ambient temperature (70°F). Under normal conditions of transport, the maximum temperature of the air inside the cavity occurs near the fuel element. Although the average temperature of the air is less, the worst case fuel surface temperature of 394°F is used as the air temperature to calculate the maximum internal pressure.

Using the ideal gas law, the temperature and pressure relationship is, for a constant volume,

$$\frac{P_1}{T_1} = \frac{P_2}{T_2}$$

where P_1 and T_1 = Pressure and Temperature at initial state, respectively.

Therefore the maximum internal pressure during normal transportation is calculated as

$$P2 = (14.7 \text{ psia}) \cdot \left(\frac{394 + 460}{70 + 460}\right) = 23.7 \text{ psia}$$

Temperature values throughout the package components associated with normal conditions of transport are all within the allowable limits for the respective materials. The cavity pressure due to air at the maximum cavity temperature of 394°F is less than the cask design pressure of 30 psia.

3.7.4.3 Hypothetical Accident Thermal Evaluation

The hypothetical accident thermal evaluation of Section 3.5 was repeated with an air-filled cask. Analysis results of the Divider model are shown as contour plots in Figures 3.35 and 3.36 for time steps 0.5 and 21.0 hours, respectively, for Case 2 loading and similary for Case 3 in Figures 3.37 and 3.38. Figure 3.39 is a plot of fuel temperature versus time for the fire accident transient for both loading cases.

The maximum internal pressure is reached at the maximum cavity temperature, which occurs at 20.0 hours after the fire. An air temperature of 422°F is used to calculate the maximum internal temperature using the same methodology as discussed in Section 3.7.3.2.

The maximum internal pressure is calculated as:

$$P2 = (14.7 \text{ psia}) \cdot \left(\frac{422+460}{70+460}\right) = 24.5 \text{ psia}$$

Temperature values throughout the package components associated with the hypothetical accident conditions are within the allowable limits for the respective materials. The cavity pressure due to air at the maximum cavity temperature of 422°F is less than the cask design pressure of 30 psia.

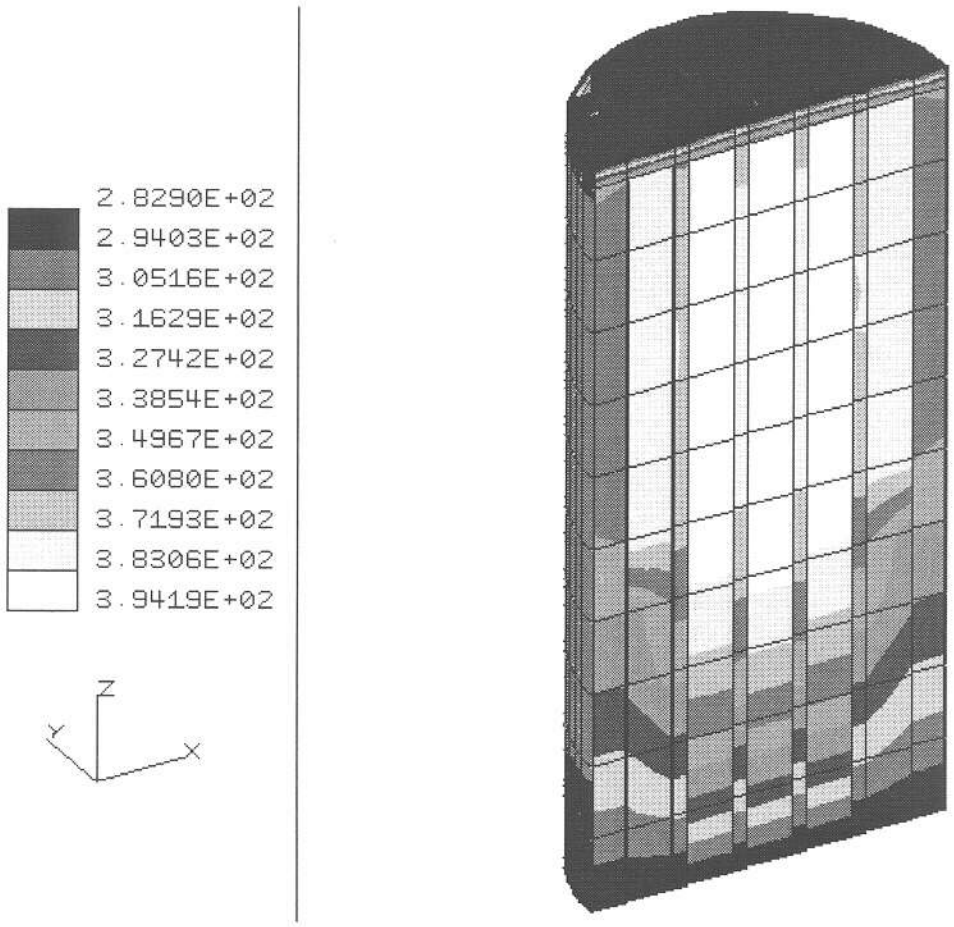

Figure 3.34. Case 2: Steady-State Thermal Analysis — Fuel Divider with Fuel Elements, 100°F Ambient with Maximum Decay Heat and Maximum Solar Load

C23

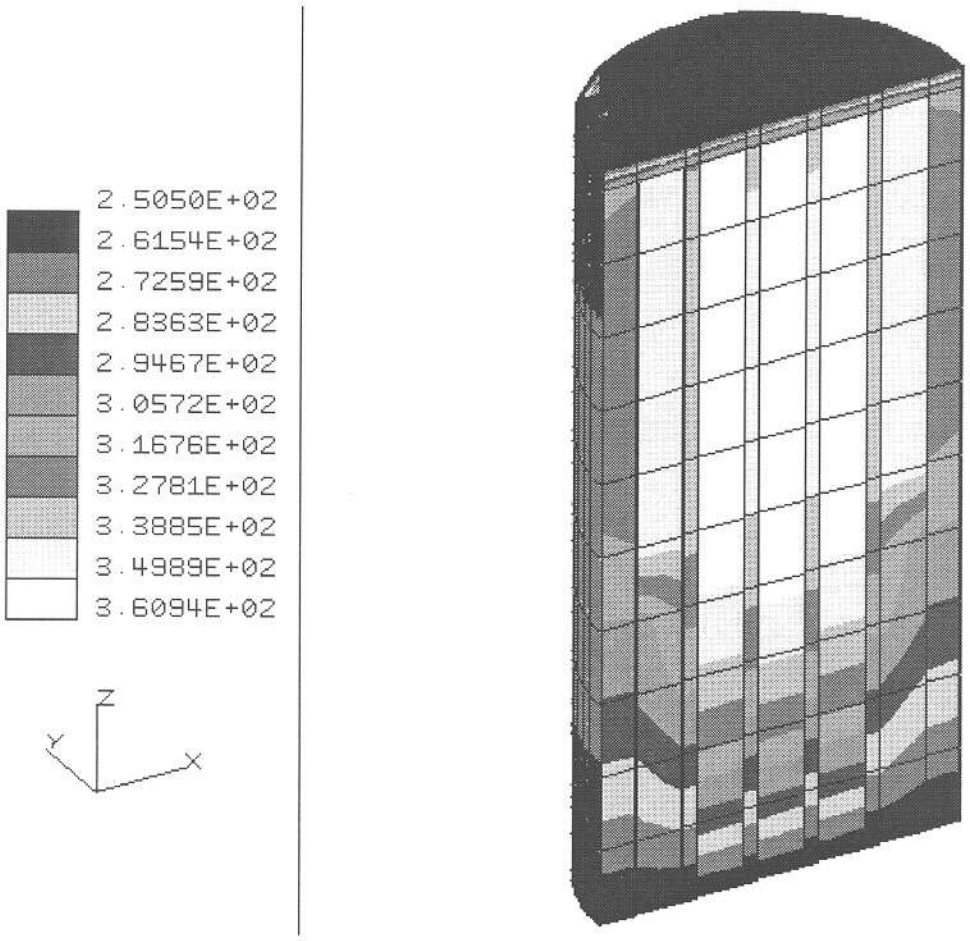

Figure 3.35. Case 2, Contour Plot — Fuel Divider Model, Transient Thermal Analysis, Fire Accident, 100°F Ambient with Maximum Decay Heat and Maximun Solar Load, Time: 0.5 Hr

C24

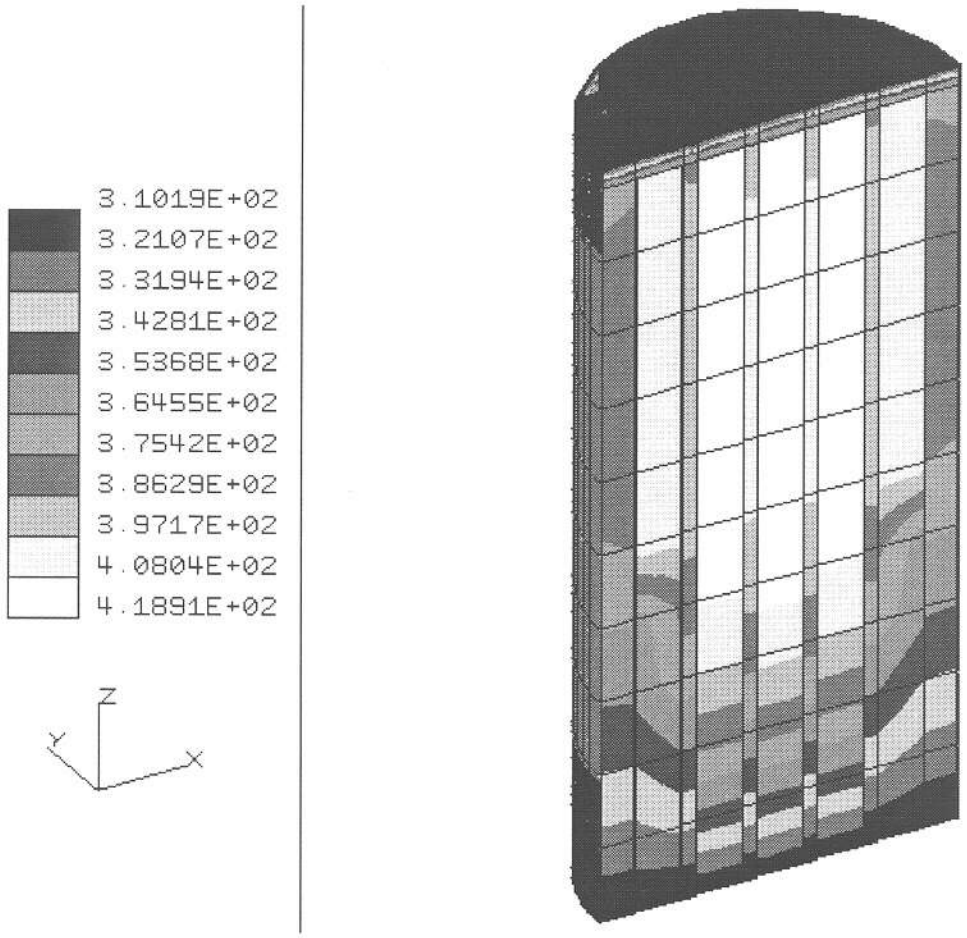

Figure 3.36. Case 2, Contour Plot — Fuel Divider Model, Transient Thermal Analysis, Fire Accident, 100°F Ambient with Maximum Decay Heat and Maximun Solar Load, Time: 21.0 Hr

C25

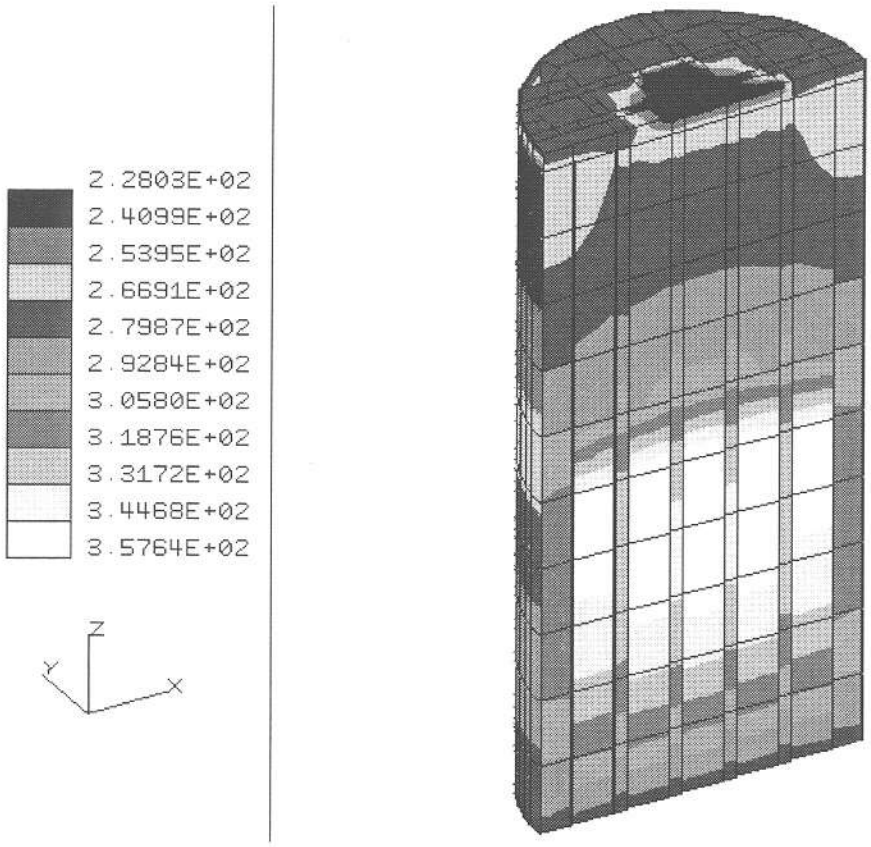

Figure 3.37. Case 3, Contour Plot — Fuel Divider Model, Transient Thermal Analysis, Fire Accident, 100°F Ambient with Maximum Decay Heat and Maximun Solar Load, Time: 0.5 Hr

C26

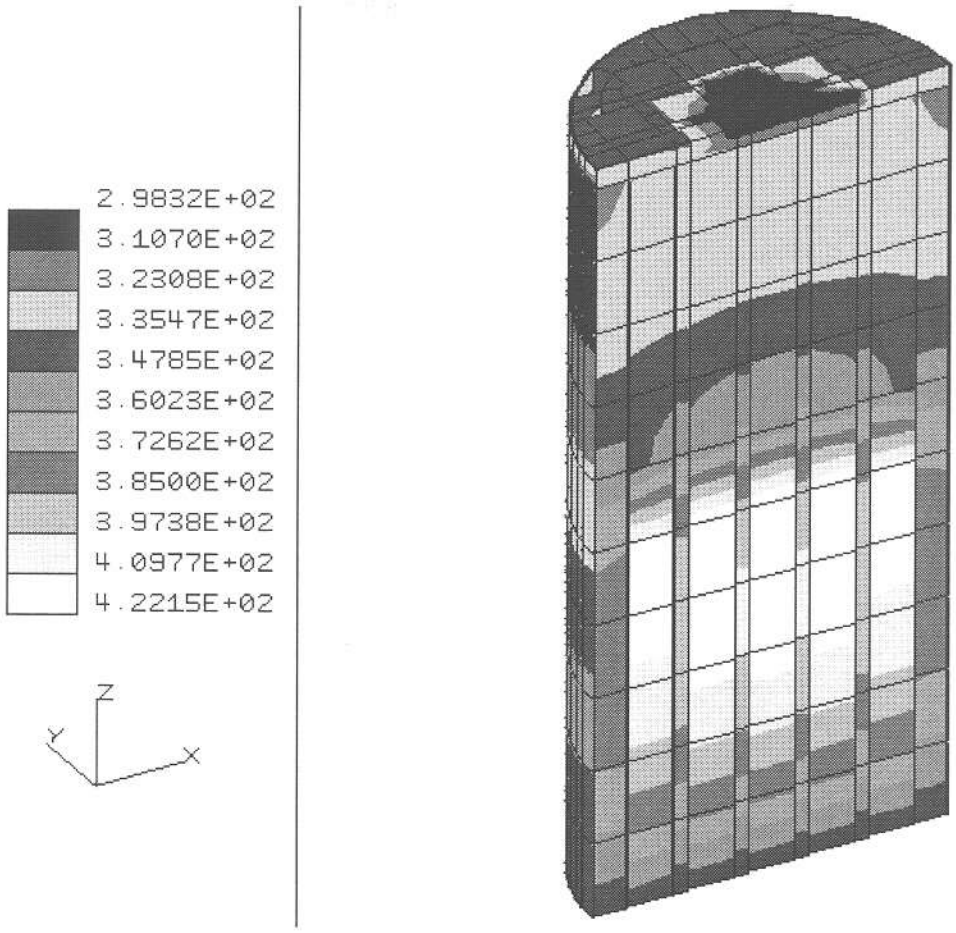

Figure 3.38. Case 3, Contour Plot — Fuel Divider Model, Transient Thermal Analysis, Fire Accident, 100°F Ambient with Maximum Decay Heat and Maximun Solar Load, Time: 14.0 Hr

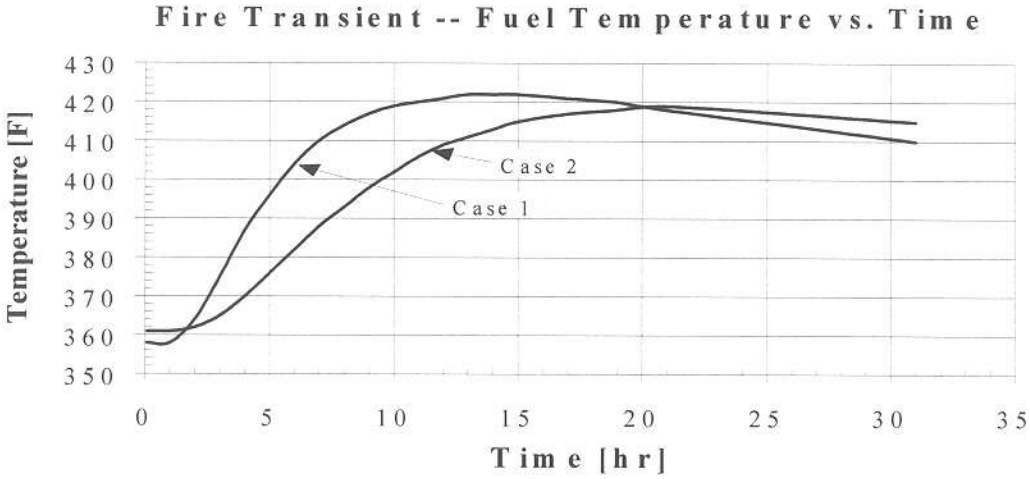

Figure 3.39. Cases 2 and 3 — Fire Accident Transient, Fuel Temperature Versus Time

C27

3.7.5 TRIGA Fuel Elements Thermal Evaluation

The TRIGA-type fuel inventory is mainly made up of four basic types of fuel elements. These are aluminum clad elements, stainless steel clad elements, Incoloy 800 clad element, and fuel follower control rod elements. All aluminum clad elements and stainless steel clad elements are approximately 1.5-in. diameter rods by 30-in. long, including the end fittings. The Incoloy 800 clad elements are of the same length, but with a smaller diameter of 0.54 in. The fuel follower control rod elements are 1.5-in. diameter rods and range from 45.0 to 66.5 inches in length. Refer to Table 1.2 for additional detailed information.

The thermal evaluation of these fuels considers three basic cases: Case I addresses the aluminum clad elements; Case II covers the stainless steel clad elements with an outside diameter of approximately 1.5 in.; and Case III considers the Incoloy 800. To perform these evaluations, a LIBRA FEA model is constructed. The model represents a fourth of one divider fuel cell cross section with either four (4) Cases I and II, or twenty (20) Case III fuel elements inside the cell, Figures 3.40 and 3.41. The one-fourth representation of the model is allowed because of the geometrical symmetry of the fuel elements arrangement within the divider cell. The model uses triangle and quadrilateral elements to represent the fuel meat and the air space and a linear element to represent the clad. Fixed temperature condition are applied on the outside edges of the model. These edges represent the divider fuel cell walls. Symmetric boundary conditions are applied to the two inner edges of the model to represent the rest of the geometry. The decay heat of the fuel meat is provided as heat flux per unit volume corresponding the specific case being analyzed. The material properties used in the model follow.

	Case I	**Case II**	**Case III**
Clad Material	Al	SS	Incoloy 800
Fuel Meat Diameter (in.)	1.415	1.435	0.510
Clad Thickness (in.)	0.030	0.020	0.016
Fuel Length (in.)	15.0	15.0	22.0
Decay Heat per Fuel Cell (watts)	30	85	85
Air Thermal Conductivity (Btu/hr-°F-in.)	0.0096	0.0096	0.0096
Fuel Thermal Conductivity (Btu/hr-°F-in.)	0.6742	0.6742	0.6742
Clad Thermal Conductivity (Btu/hr-°F-in.)	9.92	0.867	0.867
Heat Flux per Volume (Btu/hr-in^3)	1.085	2.9896	2.9896

CASE I & II

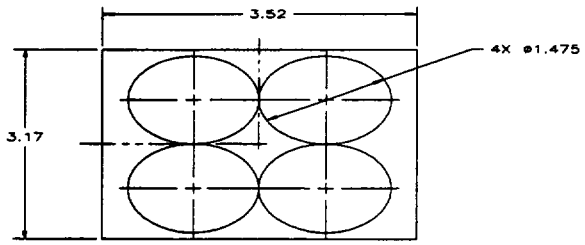

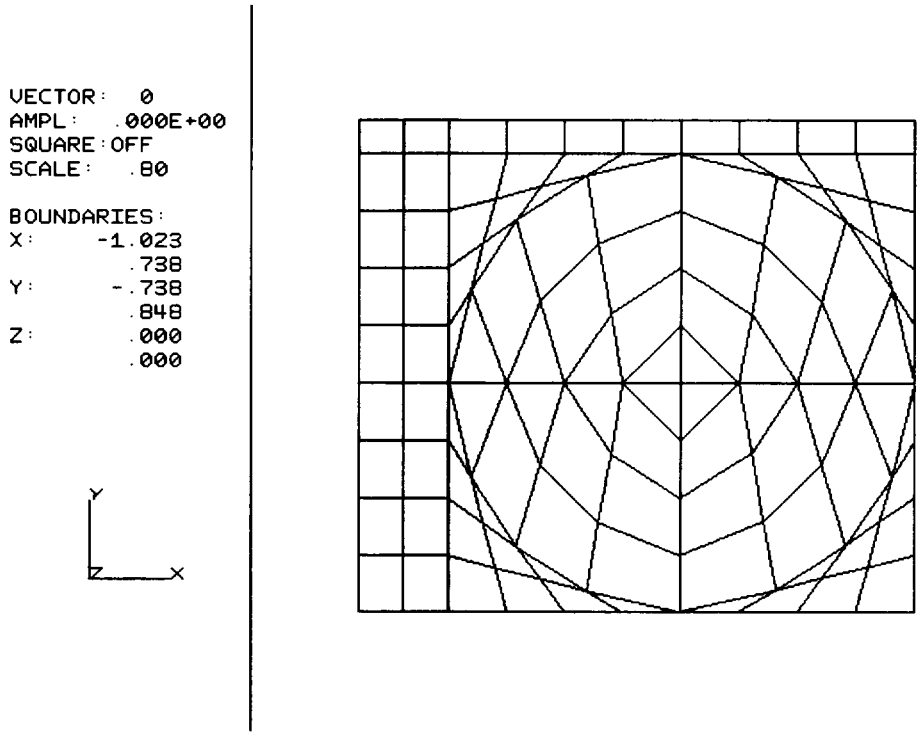

Figure 3.40. TRIGA LIBRA FEA Model for Cases I and II

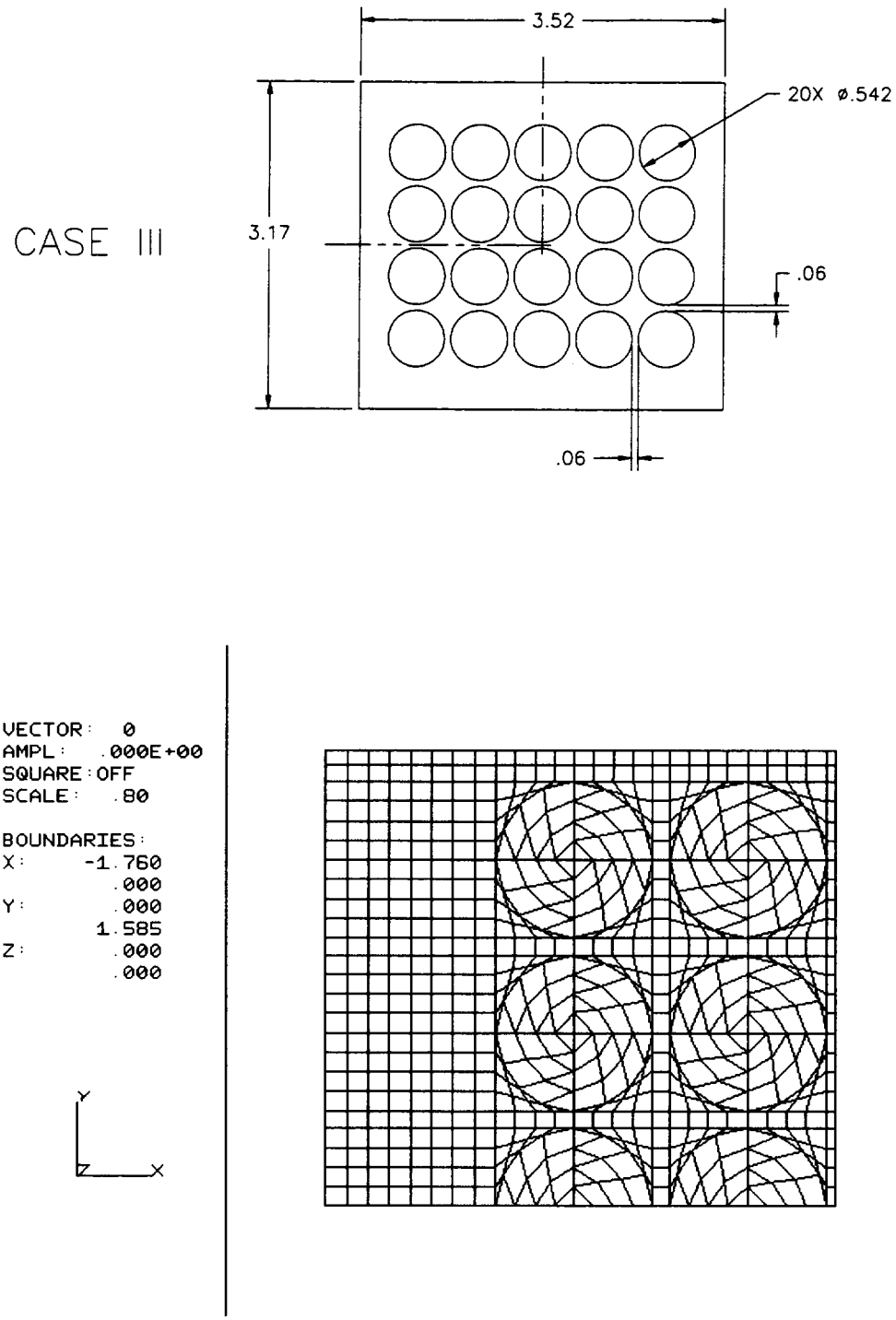

Figure 3.41. TRIGA LIBRA FEA Model for Case III

3.7.5.1 Case I, Aluminum Clad Fuel Elements

The aluminum clad TRIGA-Type fuel elements are shipped in the Model 2000 package with four (4) elements per divider fuel cell. The evaluation for this case considers a maximum of 30 watts of decay heat per cell for a total of 630 watts per shipment. This thermal load is well below the thermal load applied in the MTR-Type fuel elements (1500 watts), therefore the MTR-Type fuel evaluation encompasses the TRIGA-Type fuel. The MTR-Type fuel elements are also clad with aluminum material.

To validate this hypothesis, the LIBRA model shown in Figure 3.40 is applied to the normal condition of transport, 100°F ambient temperature, maximum decay heat (30 watts) and maximum insolation. The selection of this normal condition is based on the fact that this condition imposed the highest element clad temperature of all normal conditions. The analysis results show a maximum clad temperature of 265°F, as shown in Figure 3.43. This 265°F temperature is below the corresponding temperature of 390°F obtained in the evaluation for Case 3, MTR-Type fuel, and is also well below the 400°F criteria for the aluminum clad fuel.

The analysis performed to establish the 265°F temperature requires the divider fuel cell wall temperature as a boundary condition. To identify this temperature, the LIBRA divider model, described in Paragraph 3.4.1.2, is executed using a decay heat distribution of 30 watts in all 21 fuel cells of the divider lower region. The analysis results in a divider fuel cell wall temperature of 248°F. This temperature is then applied as boundary condition to the model shown in Figure 3.40.

The evaluation for accidental condition, fire, is not performed because it can be postulated that given the same thermal load (30 watts per cell) and the same thermal mass (divider) as those of Case 3, MTR-Type fuel, the temperature change of the fuel clad from the normal condition (1.b)[1] analyzed to the accident condition (2.b)[1] would have a magnitude similar to that experienced by the cask cavity surface under those conditions. Table 3.1C provides a temperature difference of 47°F for the cask cavity surface between same conditions (1.b and 2.b). Therefore, it can be projected that the temperature for the aluminum clad under the accident condition would be around 312°F. This 312°F temperature is below both the corresponding temperature for Case 3, MTR-Type fuel, and the criteria temperature.

Notes: (1) Refer to Subsection 3.1.2 for design bases conditions.

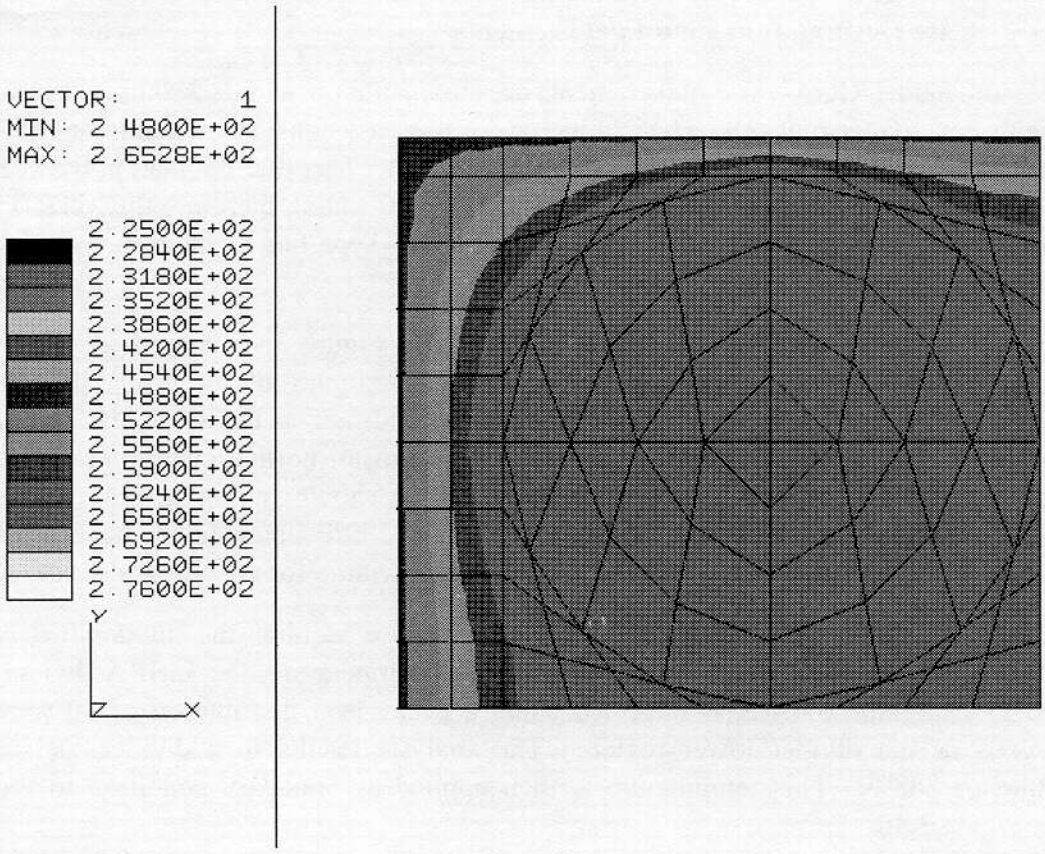

Figure 3.42. Aluminum-Clad Triga Fuel — Steady State Thermal Analysis, 100°F Ambient with Maximum Decay Heat and Maximum Insolation

3.7.5.2 Case II — Stainless Steel Clad Fuel Element

The stainless steel clad fuel element covered under Case II has a maximum outside diameter of 1.478 inches. However for the purpose of the analysis presented in this subsection, the outside dimension used in the model is 1.475. Accepting this dimension allows the use of the LIBRA model employed in the Case I evaluation, shown in Figure 3.40, with minor changes. Only the clad material properties and the temperature boundary condition are needed to change. The divider fuel cell temperature is 383°F. This temperature is provided by the Case 3, MTR-Type fuel evaluation presented in Appendix 3.7.4 and shown in Table 3.1B under condition 1.b. The thermal load or decay heat for Case II is identical to that of Case 3, MTR-Type fuel, 85 watts per position, 1500 watts total per shipment. Because the clad material of these fuel elements is stainless steel, the design criteria temperature is 600°F. This temperature criteria corresponds to the criteria of the cask cavity surface.

The clad temperature provided by the analysis is 431°F for normal condition of transport, 100°F ambient temperature maximum decay heat and maximum insolation. Refer to Figure 3.43. Using the same rational presented for Case I to establish the accident condition temperature, under accident condition the clad temperature is approximately 473°F. In both thermal conditions, the resulting temperatures are below the design criteria of 600°F.

C28

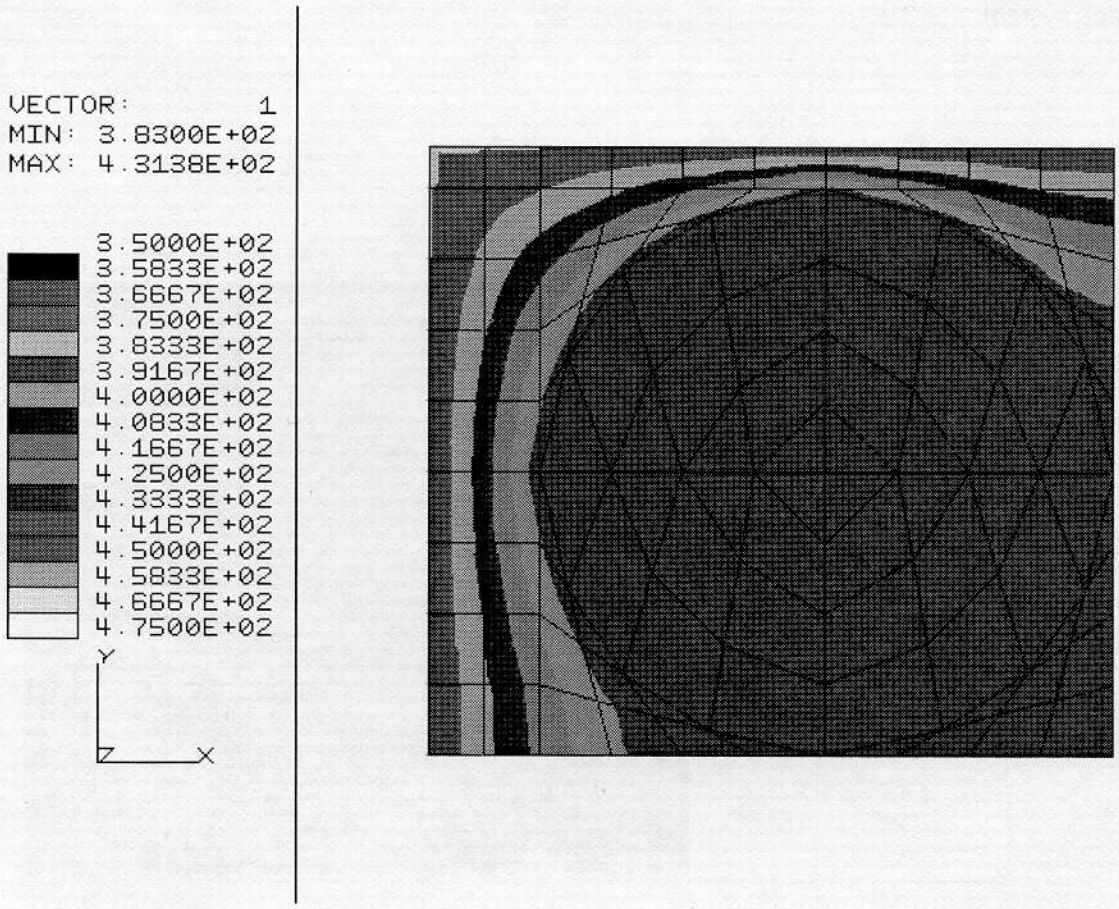

Figure 3.43. Stainless Steel Clad TRIGA Fuel, 1.475" Diameter: Steady State Thermal Analysis, 100°F Ambient with Maximum Decay Heat and Maximum Insolation

3.7.5.3 Case III, Incoloy 800 Clad Fuel Element

The Case III, Incoloy 800 clad fuel elements have an 0.542-inch outside diameter, and are placed within the divider fuel cell in a 5 by 4 array. Figure 3.41 depicts the LIBRA model used in the thermal evaluation of these fuel elements. The analysis for this case considers a maximum of 85 watts of decay heat per cell and 1500 watts total per shipment. The normal condition, maximum insolation analysis result is shown in Figure 3.44. The maximum clad temperature is 438°F. Using the same rational presented for Case I to establish the accident condition temperature, under accident condition the clad temperature is approximately 480°F. In both thermal conditions, the resulting temperatures are below the 600°F design criteria.

C29

3.7.5.4 Conclusion

The results of the analyses described in the preceding subsections show the transportation of TRIGA-Type fuel elements in the divider is within the thermal capacity of the Model 2000 package system.

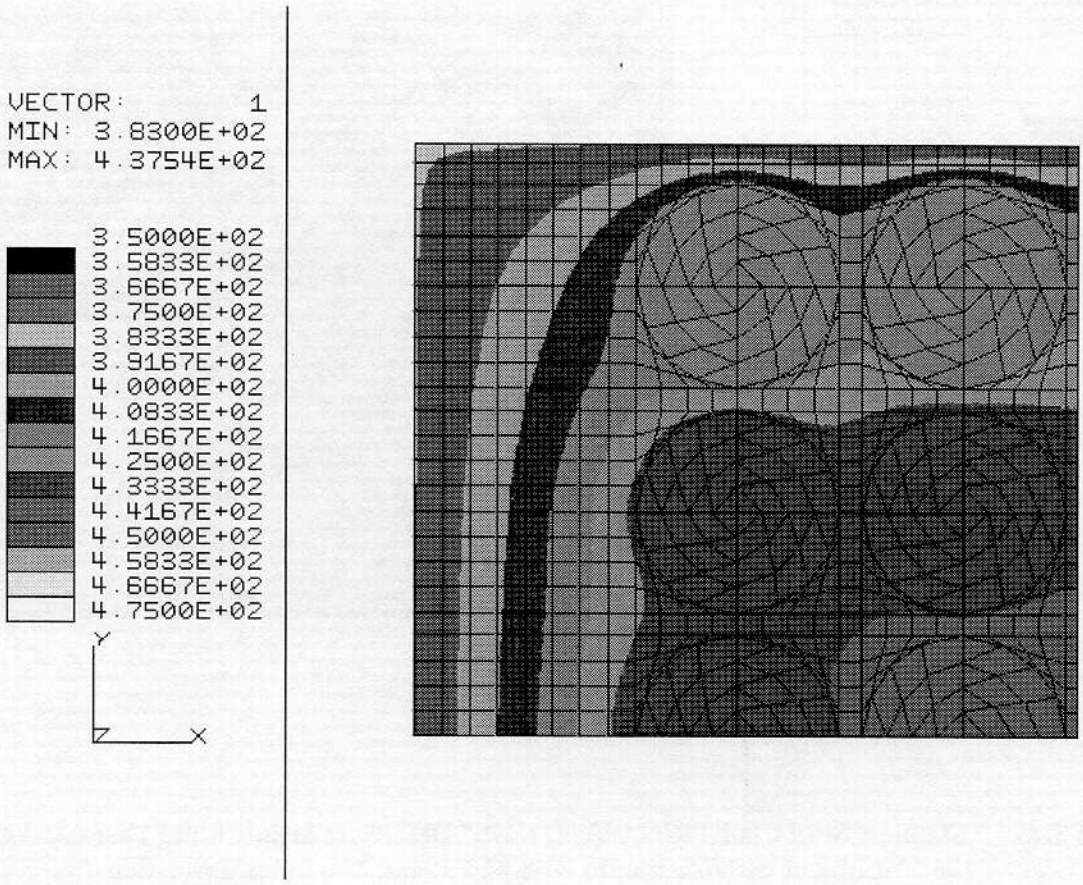

Figure 3.44. Incoloy 800 Clad Triga Fuel, 0.452" Diameter — Steady State Thermal Analysis, 100°F Ambient with Maximum Decay Heat and Maximum Insolation

C 30

4. CONTAINMENT

The containment evaluation of the Model 2000 Transport Package is provided in Chapter 4.0 of the Package Safety Analyses Report (SAR), NEDO-31581, April 1988. It was demonstrated that the Package remains leak tight under all normal and specified hypothetical accident conditions. The use of the MTR-type fuel divider with either MTR or TRIGA fuel assemblies has no physical effect on the cask containment boundary. Use of the TSR basket will also have no physical effect on the cask containment boundary.

Based on the documented experimental data [4.1], no fission gas is released from the MTR plate type fuel below the melting point of aluminum i.e. 600°C. The maximum fuel plate temperature, under accident condition, is calculated to be 422°F (217°C).

Thus, there will be no release of fission gas in the cask cavity during shipment even under the worst accident conditions. However, the cask cavity is filled with He at 14.7 psia at room temperature. The maximum internal pressure in the cask cavity due to increased temperature is estimated to be 24.5 psia. The pressure of 24.5 psia is less than the containment design pressure of 30 psia. Therefore, the Model 2000 design pressure is a conservative design basis for the shipment of the MTR-type or TRIGA fuel elements.

4.1 REFERENCES

[4.1] "Fission Product Release from Research Reactor Fuels", Section A.4, and Appendices A thru E, IDO-17218, Annual Progress Report on Reactor Fuels and Material Development for FY 1966, Edited by W.C.Francis, and R.A.Moen, Phillips Petroleum Company for U.S. Atomic Energy Commission, November, 1966.

5. SHIELDING EVALUATION

Shielding analyses of the Model 2000 Package with different batches of MTR-type reactor fuel with initial U-235 enrichments ranging from 20% to 93.2% are described in this Chapter. The discussion in this section is centered on three types of fuel with enrichments of 20, 45 and 93% U-235. For each enrichment a bounding specific burnup, in Mwd/t, is calculated and a gamma source term is extracted based on this quantity. In addition, the source also depends upon the decay time of the fuel once it has been removed from the core. To ensure that all possible combinations producing specific burnups within the acceptable bounds provide dose rates and decay heat below the allowed limits, a conservatively large decay time of 880 days was picked for all the analyses. This approach was subsequently deemed to be overly conservative and an alternate approach to determining the cask loading with spent fuel is presented in Appendix 5.6.5 of this Chapter.

The new approach uses three independent variables: specific power (kw/kg), percent U-235 burnup (or the effective full power days, EFPD), and the decay time (days). The quantity of interest is the allowed shippable mass of U-235 in a consignment such that the dose rate limits and decay heat limits are met. By varying the three independent variables, a database of shippable U-235 masses has been established. Using this database and a scheme discussed in the Appendix, the shipper can establish an optimal loading of the cask to maximize the number of shipped bundles. The scheme allows for an assortment of fuel elements of different exposures, operating conditions, and decay times to be loaded in an optimal manner for shipping and is independent of enrichment.

The following Sections of this Chapter present results based on the original calculations, while the Appendix 5.6.5 presents the results based on the new scheme. The shippable mass for a decay time of 880 days derived from this set of data will be different from the masses presented in the Appendix because in the new scheme a lower contact dose limit of 170 mrem/hr was used to determine these masses. Also, since it would have been time consuming to set up a the database using Monte Carlo techniques, a simpler point kernel type of calculation was used. This code, ISOSHLD (ref. 5.4), was benchmarked against MCNP, the Monte Carlo code used in the original calculations. It was seen that the point kernel method gave more conservative numbers than the Monte Carlo method, making the shippable mass estimation a little conservative.

In addition, a special calculation was done using RIBD for the TSR reactor, which is included in the Appendix (Section 5.6.3). No neutron calculations were performed for this special shipment as the MTR neutron dosimetry analysis showed that the neutron dose rates were very small compared to the gammas at all enrichments.

5.1 DISCUSSION AND RESULTS

The Model 2000 Transport Package is designed for transporting irradiated fuel, hardware, and waste. In view of the above, there is no single specific source term. This evaluation is made specifically to consider shipments of worst case MTR-type irradiated fuel elements. The purpose of the shielding is to maintain the dose rates from the loaded container within DOT transportation limits. Calculations have been made to demonstrate that the normal and accident condition dose rates with the MTR-type fuel fission product radionuclide load will not exceed the regulatory limits.

Theoretical analyses of the Model 2000 Transport Package shielding capabilities were performed for three hypothetical worst-case batches of irradiated fuel assemblies in the massive insert inside the cavity of the Model 2000. A shielding model was set up for an irradiated uranium fuel load. The fission product inventory was obtained for *each* MTR-type fuel so that the total decay time was 880 days. This analysis was performed using RIBD [Ref. 5.3], a code obtained from the Radiation Shielding Information Center (RSIC). This source was then used in performing the actual shielding calculations using the Monte Carlo Radiation Transport code, MCNP, obtained from the Los Alamos National Laboratory (LANL) [Ref. 5.5]. Neutron sources were obtained for each of the three enrichments using ORIGEN [Ref. 5.6], another code package from RSIC.

The Model 2000 Cask uses poured lead and stainless steel as the primary shielding media. A stainless steel fuel divider, the stainless steel structural shells of the overpack, and distances to the outer surfaces of the overpack serve to further attenuate the radiation from the contents. The fuel divider used for supporting the fuel element sections and neutron poison panels provides additional shielding due to the mass of stainless steel used in its construction.

The nominal thicknesses of shielding materials and distances, as determined from the fabrication drawings, were used in the shielding analysis. A full three dimensional model was developed preserving the details of the divider and the cask (Figure 5.1). The overpack at the top and bottom were treated conservatively as void spaces. The shielding model used in MCNP showing the dose calculation points for the normal and accident conditions are shown in Figures 5.2 and 5.3, respectively.

The summary of the maximum calculated dose rates from an irradiated fuel load is provided in Tables 5.1A through 5.1C. The combined neutron and gamma dose rates are within the limits both in the normal and accident conditions.

Table 5.1A. Summary of Maximum Dose Rates (mrem/hr), from an MTR-Type Fuel Source

93.2% enriched fuel: 533,000 MWd/T, (28 MW for 300 days), cooled for 880 days, 1265.1 Watts decay heat. All results shown are presented as calculated dose rate + 2σ

	Package Surface			1 Meter from Surface of Package			2 Meters from the Side Surface of Package (Exclusive Use)	Cab of Vehicle
	Side	**Top**	**Bottom**	**Side**	**Top**	**Bottom**		
Normal Conditions								
Gamma	67.17	15.7	179.9				7.13	0.96
Neutron	1.06	0.06	0.06				0.06	0.01
Total	68.23	15.76	179.96				7.19	0.97
49 CFR Part 173.441 Limit	200	200	200	N/A	N/A	N/A	10	2
Hypothetical Accident Conditions								
Gamma				17.38	7.19	142.32		
Neutron				0.17	0.02	0.04		
Total				17.55	7.21	142.36		
10 CFR Part 71 Limit				1000	1000	1000		

Table 5.1B. Summary of Maximum Dose Rates (mrem/hr), from an MTR-Type Fuel Source

45% enriched fuel: 253,000 MWd/T (54.78 MW for 69 days), cooled for 880 days, 681.38 Watts decay heat. All results shown are presented as calculated dose rate + 2σ

	Package Surface			1 Meter from Surface of Package			2 Meters from Side of Vehicle (Exclusive Use)	Cab of Vehicle
	Side	Top	Bottom	Side	Top	Bottom		
Normal Conditions								
Gamma	37.87	2.11	99.67				3.98	0.58
Neutron	2.65	0.15	0.16				0.15	0.02
Total	40.52	2.26	99.83				4.13	0.6
49 CFR Part 173.441 Limit	200	200	200	N/A	N/A	N/A	10	2
Hypothetical Accident Conditions								
Gamma				9.59	1.03	79.06		
Neutron				0.42	0.06	0.10		
Total				10.01	1.09	79.16		
10 CFR Part 71 Limit				1000	1000	1000		

Table 5.1C. Summary of Maximum Dose Rates (mrem/hr), from an MTR-Type Fuel Source

20% enriched fuel: 100,000 MWd/T (22.5 MW for 156 days), cooled for 880 days, 582.4 Watts decay heat. All results shown are presented as calculated dose rate + 2σ

	Package Surface			1 Meter from Surface of Package			2 Meters from Side of Vehicle (Exclusive Use)	Cab of Vehicle
	Side	Top	Bottom	Side	Top	Bottom		
Normal Conditions								
Gamma	32.00	3.86	87.00				4.04	0.48
Neutron	2.63	0.15	0.16				0.15	0.02
Total	34.63	4.01	87.16				4.19	0.50
49 CFR Part 173.441 Limit	200	200	200	N/A	N/A	N/A	10	2
Hypothetical Accident Conditions								
Gamma				8.25	1.69	68.00		
Neutron				0.42	0.06	0.10		
Total				8.67	1.75	68.10		
10 CFR Part 71 Limit				1000	1000	1000		

5.2 SOURCE SPECIFICATIONS

5.2.1 Gamma Sources

Gamma sources were obtained using the RIBD code for each of the four enrichments: 20, 45, 70, and 93.2%. The RIBD output file for the 20% enrichment case is presented in Appendix 5.6.4. All source terms provided are for a cooling time of 880 days. The maximum average burnups were derived from actual data pertinent to the various reactors from which the spent fuel is being shipped and, as explained earlier, the most conservative number was used to determine the source.The 70% enriched case represents a TRIGA reactor with a bounding value of specific burnup for this enrichment. It can be seen from Table 5.2A that this source term is smaller than the source term for the 93.2% enriched case. Since the 93.2% case gave dose rates (presented in Section 5.1) that were within limits, it may be concluded that the worst case TRIGA reactor will not produce dose rates that exceed these limits.

The RIBD Code uses an isotope library which contains the major decay modes, fission yields, and abundances in the calculation of a particular fission product source. The total photon data base resulting from the RIBD calculations is sorted into the 25 energy groups by a computer routine.

Details of these processes can be found in the code descriptions (References [5.3] and [5.4]). Table 5.2A provides the gamma spectrum for the three different enrichment cases.

5.2.2 Neutron Source

Neutron emissions from irradiated fuel are dependent on the fuel composition and burnup. For a given burnup, the neutron source strength gets smaller as the enrichment goes up, the reason being that the amount of U-238 and the resultant transuranic isotopes is lower in the higher enriched uranium fuel. The transuranics are the basic components required to produce neutrons from high burnup power reactor fuel. The U-238 is required for producing the transuranic nuclides which create neutrons by spontaneous fission, principally in Cm-244, and by (α, n) reactions with oxygen (and other light elements) in the oxide fuel. The code, ORIGEN [Ref. 5.6] was used to generate neutron sources for the MTR fuels at various enrichments coupled with the respective maximum average burnup. The operating power for each case was kept constant at a 90 MW and the cooling period at 880 days for these ORIGEN calculations. This higher power level, which was used to generate the neutron source term, introduces some conservatism in the neutron source specification. The neutron source terms for the 20, 45 and 93.2% enriched cases are shown in Table 5.2B. The neutron source term for the 70% enriched TRIGA reactor was not calculated. It can be inferred from Table 5.2B, that the neutron source strength will lie between the 45 and the 93.2% values. The principal sources of the neutrons were from the spontaneous fissions of Cm-244 and the (α,n) reactions with light elements with the alpha particle coming from Pu-238. The average energy of these latter particles was taken to be 5 MeV while those of the spontaneous fissions were modeled with the Watt fission spectrum of Cm-244. The spatial distribution was modeled to be equiprobable from each of the 21 fuel slots in the rack. The results presented in Section 5.1 indicate that the neutron dose rates were not significant compared to the gamma dose rates for all enrichments. The same conclusion can be drawn with reference to the 70% enriched case.

Table 5.2A. Fission Product Gamma Sources

Group	Group Average Energy (MeV)	Total Group Production Rate (photons/sec)			
		93.2% Enriched Case	45% Enriched Case	20% Enriched Case	70% Enriched (TRIGA)
1	1.500E-02	6.704E+13	3.018E+13	2.790E+13	5.515E+13
2	2.500E-02	4.726E+13	2.129E+13	1.968E+13	3.869E+13
3	3.500E-02	2.976E+13	1.340E+13	1.236E+13	2.382E+13
4	4.500E-02	1.847E+13	8.310E+12	7.682E+12	1.499E+13
5	5.500E-02	1.393E+13	6.272E+12	5.798E+12	1.141E+13
6	6.500E-02	1.029E+13	4.631E+12	4.281E+12	8.368E+12
7	7.500E-02	8.398E+12	3.779E+12	3.494E+12	6.841E+12
8	8.500E-02	6.784E+13	3.857E+13	3.308E+13	1.431E+13
9	9.500E-02	5.333E+12	2.399E+12	2.218E+12	4.329E+12
10	1.500E-01	3.242E+14	1.901E+14	1.612E+14	3.984E+13
11	2.500E-01	1.119E+12	5.435E+11	4.599E+11	8.921E+11
12	3.500E-01	3.516E+11	1.699E+11	1.437E+11	2.125E+11
13	4.750E-01	3.040E+14	1.559E+14	1.282E+14	7.970E+13
14	6.500E-01	1.941E+15	8.886E+14	8.101E+14	1.508E+15
15	8.250E-01	1.024E+14	4.732E+13	4.021E+13	3.755E+13
16	1.000E 00	2.107E+13	1.066E+13	8.661E+12	5.744E+12
17	1.225E 00	1.021E+13	4.826E+12	4.015E+12	4.169E+12
18	1.475E 00	1.416E+13	7.553E+12	6.433E+12	2.657E+12
19	1.700E 00	2.070E+11	8.591E+10	7.323E+10	1.869E+11
20	1.900E 00	2.748E-04	4.240E-04	1.87E-04	1.37E-05
21	2.100E 00	2.004E+13	1.183E+13	1.002E+13	2.109E+12
22	2.300E 00	1.185E+12	6.200E+11	4.990E+11	2.245E+11
23	2.500E 00	3.566E-06	6.870E-06	2.89E-06	2.09E-07
24	2.700E 00	0	0	0	0
25	3.000E 00	1.308E-07	2.520E-07	1.06E-07	7.65E-09
Totals		3.008E+15	1.447E+15	1.287E+15	1.859E+15

Table 5.2B. Neutron Source for the MTR Fuels

Enrichment percent	Spontaneous Fission neutrons/sec	(α,n) neutrons/sec
20	2.206e+06	3.772e+05
45	1.930e+06	6.570e+05
93.2	2.805e+05	7.213e+05

5.3 MODEL SPECIFICATION

5.3.1 Description of the Geometric Model

The MCNP model was generated in full three dimensions preserving details of the cask and fuel divider structures. A 1.27 cm (0.5 inch) thick plate of a Tungsten alloy (95w% Tungsten) was included in the cask support plate. The radius of this disk was taken to be 33.655 cm (13.25 in.) (i.e., the extent of the inside of the cask). The top and bottom overpacks were conservatively treated as empty cylinders of height 60.96 cm (24 in.), and not as tori. The side overpack was modeled as a steel shell of inner and outer thickness of 1.27 cm (0.5 in.). The bottom overpack rested on a 1.27 cm (0.5 in.) steel plate which represented the top portion of the truck bed. The bottom of the truck bed was a further 29.21 cm (11.5 in.) and represented the closet point of approach to the bottom of the package. Thus, the bottom dose rate was calculated at 30.48 cm (12 in.) below the bottom overpack, through 0.5 inches of steel and 11.5 inches of air. The side and top dose rates were calculated at the appropriate surfaces. All other dose rates (1m, 2m, and cab of the truck were calculated through air. The fuel divider was made of stainless steel and contained 21 fuel slots and 24 boral slots, all explicitly modeled. Each fuel divider contained fuel and selected fission products, smeared homogeneously through 114.3 cm (45 in.) of the slot with the bottom at 2.94 cm (1.156 in.) from the bottom of the cask.

For the accident conditions, the tori on the top and bottom of the package were crushed to 30.48 cm (12 in.) (see Figure 5.3) and the dose rates were 1m from these surfaces. The side of the overpack remains intact and the 1m dose rate from the normal conditions represent those in the accident scenario as well.

The material densities used for the shielding analyses were:

Smeared fuel density	1.017 g/cc
Boral Density	2.655 g/cc
Lead in cask	11.34 g/cc
Stainless Steel in the system	7.80 g/cc
Tungsten Alloy (95w% Tungsten)	17.75 g/cc

5.3.2 Source Specification in MCNP

A smeared fuel density of 1.017 gm/cc was used and contained 91.35% by weight of aluminum, 4.27% by weight of uranium and 1.67% by weight of oxygen. The fission products included, which made up the rest of the mass, were Zr, Mo, Ru, Xe, Cs, Ce and Nd, based on their abundances at this stage in the fuel elements. As mentioned in the previous sections, the energy spectrum for each enrichment with the corresponding maximum average burnup was used to generate the photon spectrum (shown in Table 5.2A). These distributions were used in MCNP to model the source gammas. The spatial distribution was treated as being equiprobable in each of the 21 fuel slots. The source was positioned in the basket such that its bottom was 2.94 cm (1.156 in.) from the bottom of the cask cavity and extended upward to an extent of 114.3 cm (45 in.). The axial position of the source was also sampled uniformly over the axial extent.

The neutron calculations were performed with distributions based on the origin of the neutrons per Table 5.2B. The fuel material used in these calculations was the same as that used in the photon transport calculation. All the fuel is assumed to be U-235 with no U-238 or other transuranics being included. Since the neutron dose rates are very low compared to the gamma dose rates for all three enrichments examined (of the order of 3% or less), any lack of conservatism introduced into the neutron calculations (by ignoring transuranics) can be adequately accommodated by the existing margins in the dose rates.

Sample MCNP inputs for a gamma and neutron calculation are provided in Appendices 5.6.1 and 5.6.2 of this Chapter, respectively.

FIGURE WITHHELD UNDER 10 CFR 2.390

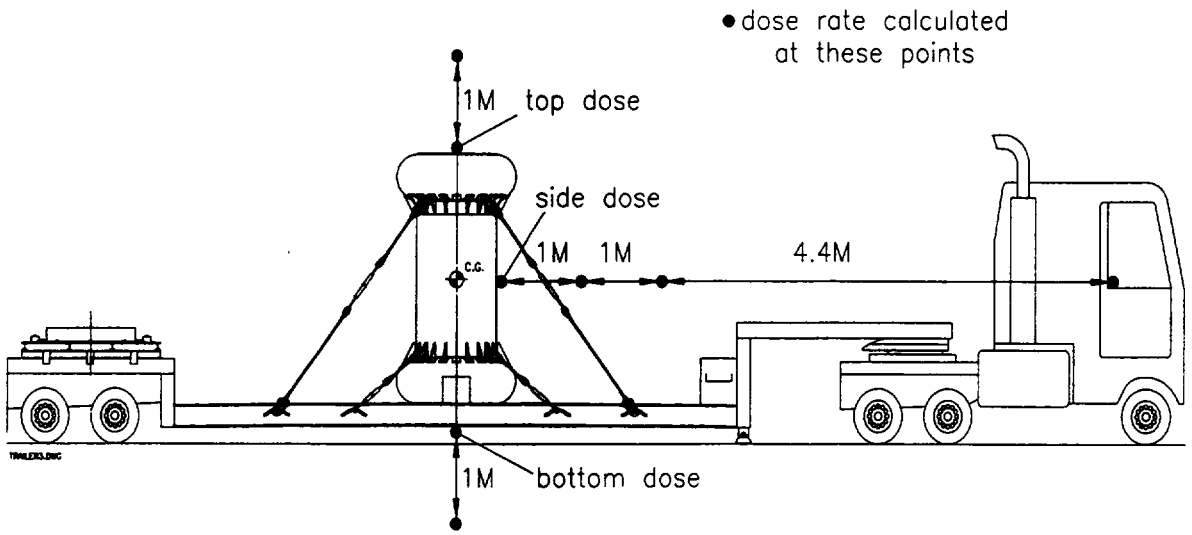

Figure 5.2. Normal Condition Shielding Analysis Dose Points

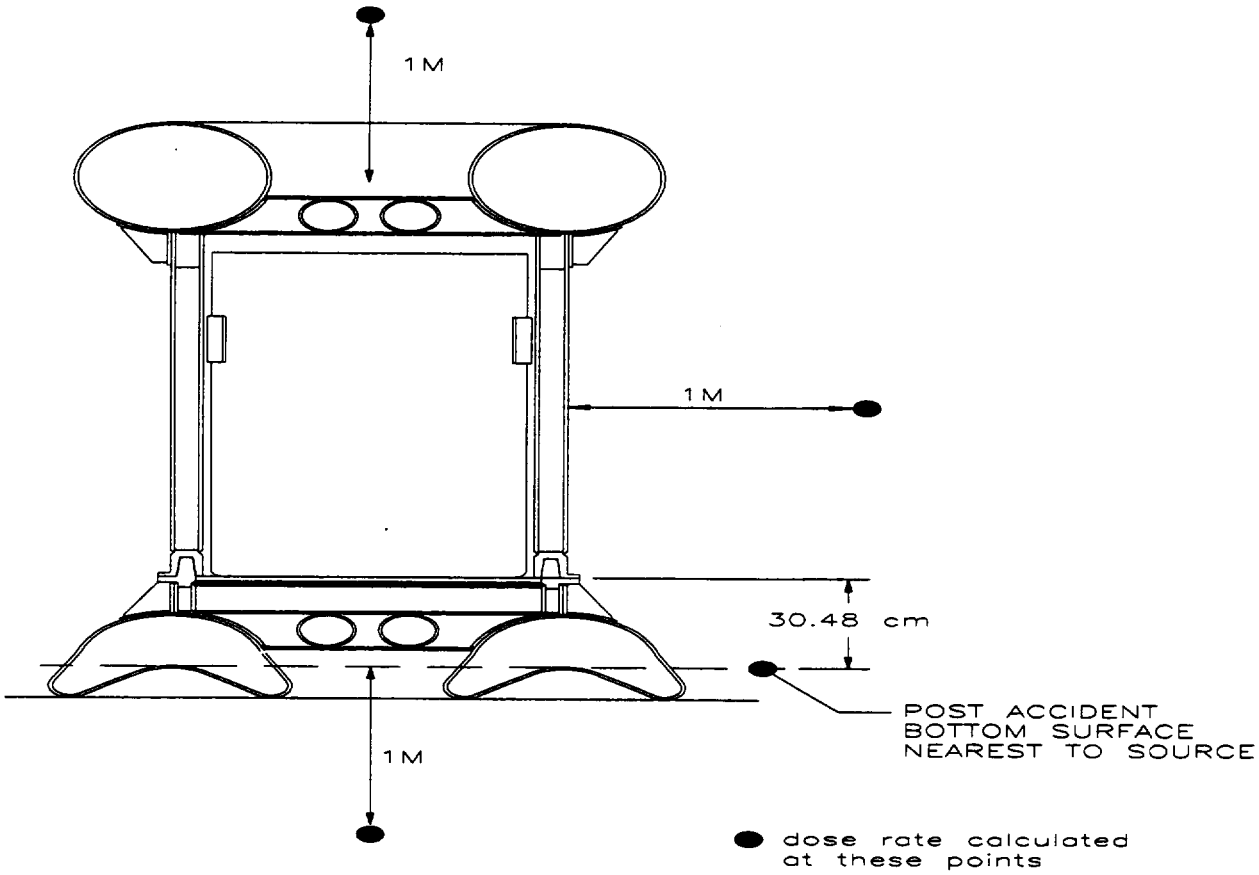

Figure 5.3. Accident Condition Shielding Analysis Dose Points

5.4 SHIELDING EVALUATION

The basic method of determining the estimated dose rates at the surface, one meter, two meters from the vehicle, and 640.08 cm (21 ft.) (cab of vehicle), from the source in the Model 2000 Packaging as well as the dose rates in an accident condition, is outlined as follows:

1. The selected fuel operating and decay conditions were used as the input to the RIBD computer code portion of the combined RIBD and ISOSHLD codes. The gamma spectrum generated by RIBD/ISOSHLD for each enrichment, was used in the corresponding MCNP calculation as the source distribution. Similarly, the ORIGEN generated neutron source was used in separate MCNP neutron dose rate calculations. The specific RIBD input parameters used for 42 elements of the 93.2% case are:

   Fuel operating power = 28 MW (42/30's of the core power, 20 MW)

   Operating time = 300 days

   Decay time after shutdown = 880 days

   Average thermal neutron flux = 3.98×10^{13} n/cm^2-s

   U-235 absorption cross section = 683 barns

   U-235 fission cross section = 577 barns

   U-238 absorption cross section = 2.68 barns

   U-235 weight = 14,700 grams

   Total U weight = 15,773 grams

   U-239 production rate = 0.000354 g U-239/MWd

2. The code, MCNP was selected for the analysis as it is a public domain code and is considered the state-of-the-art code for benchmarking other codes used in neutron and photon transport calculations. It has full 3-D geometric modeling capabilities and uses continuous energy cross-sections for neutron transport and a 100-200 group gamma cross section set. Electron transport is also available in the code. For this set of calculations the Thick Target Bremsstrahlung approximation was used for an approximate treatment of electron transport. In this approximation, explicit electron transport (which is costly and unnecessary for this type of calculation) was replaced by the assumption that all the electron energy is deposited at the source point and the secondary gammas are transported from that point. The flux to dose rate conversion factors used for the gammas is provided below and is the set accompanying ISOSHLD (Table 5.3). The neutron flux to dose rate conversion factors came from the standard ANSI/ANS 6.1.1-1977 set.

3. The calculated combined neutron and gamma dose rates were compared with the regulatory dose rate limits (i.e., 200 mrem/hr at the surface, 2 mrem/hr in the vehicle cab, and 10 mrem/hr at two meters from the vehicle for exclusive use; and 1,000 mrem/hr at one meter for the accident case).

Table 5.3. Gamma Flux-Dose Rate Conversion Factors

Flux-to-Dose Rate Average Energy (MeV)	Conversion Factor (R/hr per MeV/cm^2-sec)
1.500E-02	8.230E-05
2.500E-02	1.730E-05
3.500E-02	6.349E-06
4.500E-02	3.280E-06
5.500E-02	2.289E-06
6.500E-02	1.891E-06
7.500E-02	1.714E-06
8.500E-02	1.618E-06
9.500E-02	1.603E-06
1.500E-01	1.728E-06
2.500E-01	1.960E-06
3.500E-01	2.060E-06
4.750E-01	2.039E-06
6.500E-01	2.080E-06
8.250E-01	2.000E-06
1.000E 00	1.930E-06
1.225E 00	1.841E-06
1.475E 00	1.761E-06
1.700E 00	1.710E-06
1.900E 00	1.660E-06
2.100E 00	1.600E-06
2.300E 00	1.540E-06
2.500E 00	1.520E-06
2.700E 00	1.480E-06
3.000E 00	1.430E-06

5.5 REFERENCES

[5.1] "Code of Federal Regulations", Title 10, Part 71, 1992.

[5.2] "Code of Federal Regulations", Title 49, Part 173, 1992.

[5.3] RIBD, "Radioisotope Buildup and Decay Code and Library", CCC-137.

[5.4] ISOSHLD, "Kernel Integration Code — General Purpose Isotope Shielding Analysis", CCC-79.

[5.5] Briesmeister, J.F., "MCNP- A General Monte Carlo N-Particle Transport Code", LA12625, Version 4A, 1993.

[5.6] Croff, A.G., ORIGEN2, ORNL/TM-7175, July 1980.

[5.7] Whalen, D.J. et. al., "MCNP: Photon Benchmark Problems", LA-12196, Los Alamos National Laboratory, 1991.

[5.8] Whalen, D.J. et. al., "MCNP: Neutron Benchmark Problems", LA-12212, Los Alamos National Laboratory, 1991.

5.6 APPENDIX

5.6.1 Sample MCNP Input for Photon Dose Rate Calculations

```
MOCKUP OF MODEL 2000 SHIPPING CONTAINER-SPENT FUEL-20% ENR
C      0.5 INCH OF TUNGSTEN SANDWICHED IN THE
C      INNER SHELL OF THE OVERPACK
C      DEFINITION OF SURFACE CHANGED TO BE DEFINED AS
C      BOTTOM OF THE FLAT-BED CAR; ALSO BOTTOM OF FUEL
C      NOW 1.156" FROM BOTTOM OF CASK
C      SOURCE STRENGTH OF 1.287E15 PHOTONS/SEC
C      17.75 GM/CC W-ALLOY W/ 95W% TUNGSTEN
C      BOTTOM,BOTTOM+2M
C
C
C      CELL CARDS
C      FUEL RACK
C      FUEL ELEMENTS
101    3 -1.01683    -411 412 403 -404 421 -422
102    3 -1.01683    -411 412 405 -406 421 -422
103    3 -1.01683    -411 412 407 -408 421 -422
104    3 -1.01683    -413 414 401 -402 421 -422
105    3 -1.01683    -413 414 403 -404 421 -422
106    3 -1.01683    -413 414 405 -406 421 -422
107    3 -1.01683    -413 414 407 -408 421 -422
108    3 -1.01683    -413 414 409 -410 421 -422
109    3 -1.01683    -415 416 401 -402 421 -422
110    3 -1.01683    -415 416 403 -404 421 -422
111    3 -1.01683    -415 416 405 -406 421 -422
112    3 -1.01683    -415 416 407 -408 421 -422
113    3 -1.01683    -415 416 409 -410 421 -422
114    3 -1.01683    -417 418 401 -402 421 -422
115    3 -1.01683    -417 418 403 -404 421 -422
116    3 -1.01683    -417 418 405 -406 421 -422
117    3 -1.01683    -417 418 407 -408 421 -422
118    3 -1.01683    -417 418 409 -410 421 -422
119    3 -1.01683    -419 420 403 -404 421 -422
120    3 -1.01683    -419 420 405 -406 421 -422
121    3 -1.01683    -419 420 407 -408 421 -422
C      BORAL SLOTS
201    5 0.061395   -6000 6001 5002 -5003 202 -423
202    5 0.061395   -6000 6001 5006 -5007 202 -423
203    5 0.061395   -6000 6001 5010 -5011 202 -423
204    5 0.061395   5000 -5001 -6002 6003 202 -423
205    5 0.061395   5004 -5005 -6002 6003 202 -423
206    5 0.061395   5008 -5009 -6002 6003 202 -423
207    5 0.061395   5012 -5013 -6002 6003 202 -423
208    5 0.061395   -6004 6005 5002 -5003 202 -423
209    5 0.061395   -6004 6005 5006 -5007 202 -423
210    5 0.061395   -6004 6005 5010 -5011 202 -423
211    5 0.061395   5000 -5001 -6006 6007 202 -423
212    5 0.061395   5004 -5005 -6006 6007 202 -423
213    5 0.061395   5008 -5009 -6006 6007 202 -423
214    5 0.061395   5012 -5013 -6006 6007 202 -423
215    5 0.061395   -6008 6009 5002 -5003 202 -423
216    5 0.061395   -6008 6009 5006 -5007 202 -423
217    5 0.061395   -6008 6009 5010 -5011 202 -423
```

```
218   5 0.061395   5000 -5001 -6010 6011 202 -423
219   5 0.061395   5004 -5005 -6010 6011 202 -423
220   5 0.061395   5008 -5009 -6010 6011 202 -423
221   5 0.061395   5012 -5013 -6010 6011 202 -423
222   5 0.061395   -6012 6013 5002 -5003 202 -423
223   5 0.061395   -6012 6013 5006 -5007 202 -423
224   5 0.061395   -6012 6013 5010 -5011 202 -423
C     SPACE BELOW FUEL
301   4 -0.001293  -411 412 403 -404 202 -421
302   4 -0.001293  -411 412 405 -406 202 -421
303   4 -0.001293  -411 412 407 -408 202 -421
304   4 -0.001293  -413 414 401 -402 202 -421
305   4 -0.001293  -413 414 403 -404 202 -421
306   4 -0.001293  -413 414 405 -406 202 -421
307   4 -0.001293  -413 414 407 -408 202 -421
308   4 -0.001293  -413 414 409 -410 202 -421
309   4 -0.001293  -415 416 401 -402 202 -421
310   4 -0.001293  -415 416 403 -404 202 -421
311   4 -0.001293  -415 416 405 -406 202 -421
312   4 -0.001293  -415 416 407 -408 202 -421
313   4 -0.001293  -415 416 409 -410 202 -421
314   4 -0.001293  -417 418 401 -402 202 -421
315   4 -0.001293  -417 418 403 -404 202 -421
316   4 -0.001293  -417 418 405 -406 202 -421
317   4 -0.001293  -417 418 407 -408 202 -421
318   4 -0.001293  -417 418 409 -410 202 -421
319   4 -0.001293  -419 420 403 -404 202 -421
320   4 -0.001293  -419 420 405 -406 202 -421
321   4 -0.001293  -419 420 407 -408 202 -421
C     SPACE ABOVE FUEL
322   4 -0.001293  -411 412 403 -404 422 -423
323   4 -0.001293  -411 412 405 -406 422 -423
324   4 -0.001293  -411 412 407 -408 422 -423
325   4 -0.001293  -413 414 401 -402 422 -423
326   4 -0.001293  -413 414 403 -404 422 -423
327   4 -0.001293  -413 414 405 -406 422 -423
328   4 -0.001293  -413 414 407 -408 422 -423
329   4 -0.001293  -413 414 409 -410 422 -423
330   4 -0.001293  -415 416 401 -402 422 -423
331   4 -0.001293  -415 416 403 -404 422 -423
332   4 -0.001293  -415 416 405 -406 422 -423
333   4 -0.001293  -415 416 407 -408 422 -423
334   4 -0.001293  -415 416 409 -410 422 -423
335   4 -0.001293  -417 418 401 -402 422 -423
336   4 -0.001293  -417 418 403 -404 422 -423
337   4 -0.001293  -417 418 405 -406 422 -423
338   4 -0.001293  -417 418 407 -408 422 -423
339   4 -0.001293  -417 418 409 -410 422 -423
340   4 -0.001293  -419 420 403 -404 422 -423
341   4 -0.001293  -419 420 405 -406 422 -423
342   4 -0.001293  -419 420 407 -408 422 -423
C     ST. STEEL INGOT
122   1 -7.80  (411:-412:-403:404)
               #201  (-401:402:413:-414)
               #204 (-403:404:413:-414)
               -2001 2003 -301 202 -423
123   1 -7.80   (-407:408:411:-412) #203
                (-407:408:413:-414) #207
                (-409:410:413:-414)
               2002 2003 -301 202 -423
124   1 -7.80  (417:-418:-401:402) #218
```

```
                (417:-418:-403:404) #222
                (419:-420:-403:404)
                -2004 -2001 -301 202 -423
125   1 -7.80   (417:-418:-407:408) #221
                (-409:410:417:-418) #224
                (-407:408:419:-420)
                2002 -2004 -301 202 -423
126   1 -7.80   (411:-412:-405:406) #202
                (413:-414:-405:406) #205 #206
                2001 -2002 2003
                -301 202 -423
127   1 -7.80   (417:-418:-405:406) #223
                (419:-420:-405:406) #219 #220
                 2001 -2002 -2004
                -301 202 -423
128    1 -7.80  (-401:402:415:-416) #208
                (-403:404:415:-416) #211 #215
               -2001 2004 -2003
                -301 202 -423
129    1 -7.80  (-407:408:415:-416) #210
                (-409:410:415:-416) #214 #217
                2002 -2003 2004
                -301 202 -423
130    1 -7.80  (-405:406:415:-416) #209 #212 #213 #216
                2001 -2002 -2003 2004 202 -423
C     CASK
1     4 -0.001293      -104 -204 202 (301:423) $INSIDE OF CASK
2     1 -7.80     -103 104 -206 202 $ INNER SIDE OF CASK
3     1 -7.80     (-102 109 -208 206):
                (-206 -102 103 203)  $ UPPER PART OF THE SIDES
C     LEAD ON THE SIDE
4     2 -11.34     -203 202 103 -1061
401   2 -11.34     -203 202 1061 -1062
402   2 -11.34     -203 202 1062 -1063
403   2 -11.34     -203 202 1063 -1064
404   2 -11.34     -203 202 1064 -106
405   2 -11.34     (-203 210 106 -102):(202 -209 106 -102)
5     1 -7.80     (-101 102 -208 210):
                (-209 -101 102 202)  $ OUTER SIDE OF CASK
6     1 -7.80     -105 106 -210 209 $ LIFTING EAR
C     BOTTOM OF CASK
7     1 -7.80     -202 29 -101
71    1 -7.8      -29 28 -101
72    1 -7.8      -28 27 -101
73    1 -7.8      -27 26 -101
74    1 -7.8      -26 25 -101
75    1 -7.8      -25 24 -101
76    1 -7.8      -24 23 -101
77    1 -7.8      -23 22 -101
78    1 -7.8      -22 21 -101
79    1 -7.8      -21 201 -101
C     LID OF CASK
8     1 -7.80     -109 -207 206
81    1 -7.80     -206 -104 108 205
82    1 -7.80     -205 204 -104
C     LEAD IN THE LID
9     2 -11.34     205 -30 -108
91    2 -11.34     30 -31 -108
92    2 -11.34     31 -32 -108
93    2 -11.34     32 -33 -108
94    2 -11.34     33 -34 -108
```

```
95     2 -11.34      34 -35 -108
96     2 -11.34      35 -206 -108
90     4 -0.001293        -208 207 -109  $ AIR GAP ABOVE LID
C      JACKET
17     4 -0.001293       -504 -605 201 ((101:208) (210:-209:105)) $ JACKET/CASK
SPACE
18     4 -0.001293       605 -606 -504 $ TOP HONEY COMB
19     1 -7.80      (-503 504 6021 -606):(-503 -201 6021) $ INNER SHELL SIDE +
PART OF BOTTOM
191     6 -17.75       -104 -6021 6022 $ INNER SHELL BOTTOM TUNG
192     6 -17.75         -104 -6022 6023 $ INNER SHELL BOTTOM TUNG
193     1 -7.80        -503 104 -6021 6022 $ INNER SHELL BOTTOM STST
194     1 -7.80        -503 104 -6022 6023 $ INNER SHELL BOTTOM STST
195    1 -7.80         -503 -6023 603 $ INNER SHELL BOTTOM STST
20     4 -0.001293       (-502 503 -606 602):(-503 602 -603) $ BOTTOM AND SIDE
GAPS
21     1 -7.80      (-501 502 601 -607):(-502 -607 606):
                (-502 601 -602) $ OUTER SHELL
29     4 -0.001293  -608 607 -501 $TOP OVER PACK
30     4 -0.001293  -601 1004 -501 $ BOTTOM OVERPACK
C      SPACE OUTSIDE OVERPACK FOR DOSE READINGS
22     4 -0.001293 (501:608) -1009 1004 -1008
23     7 -7.86      -1009 -1004 1005
24     4 -0.001293 -1009 -1005 1006
25     4 -0.001293 -1009 -1006 1110
26     4 -0.001293 -1009 -1110 1007
27     4 -0.001293 1009 -1001 1007 -1008
28     4 -0.001293 1001 -1002 1007 -1008
31     0           (1002:1008:-1007)

C      SURFACE CARDS
101    CZ 48.895
102    CZ 46.355
103    CZ 36.195
104    CZ 33.655
105    CZ 50.4825
106    CZ 44.7675
1061   CZ 37.7
1062   CZ 39.2
1063   CZ 40.7
1064   CZ 42.2
C      107   CZ 33.5026
108    CZ 29.6926
109    CZ 43.815
201    PZ -90.17
21     PZ -88.67
22     PZ -87.17
23     PZ -85.67
24     PZ -84.17
25     PZ -82.67
26     PZ -81.17
27     PZ -79.67
28     PZ -78.17
29     PZ -76.67
202    PZ -74.6252
203    PZ  67.31
204    PZ  63.50
205    PZ  67.31
30     PZ  69.31
31     PZ  71.31
32     PZ  73.31
```

```
33     PZ  75.31
34     PZ  77.31
35     PZ  79.31
206    PZ  80.9752
207    PZ  85.4202
208    PZ  90.17
209    PZ  29.845
210    PZ  55.245
C      PARTITIONS FOR INGOT
2001   PX  -6.492875
2002   PX   6.492875
2003   PY   6.048375
2004   PY  -6.048375
C      FUEL LATTICE SURFACES
301    CZ  33.3375
401    PX -27.305
402    PX -18.415
403    PX -15.875
404    PX -6.985
405    PX -4.445
406    PX 4.445
407    PX 6.985
408    PX 15.875
409    PX 18.415
410    PX 27.305
411    PY 25.0825
412    PY 17.0815
413    PY 14.5415
414    PY 6.5405
415    PY 4.0005
416    PY -4.0005
417    PY -6.5405
418    PY -14.5415
419    PY -17.0815
420    PY -25.0825
C      421   PZ -61.9252
421    PZ -71.68896 $ REFLECTS A 1.156 INCH SPACE FROM BOTTOM
422    PZ  42.61104 $ MOVED SO THAT FUEL COLUMN IS 45 INCHES
C      422   PZ  52.3748
423    PZ  57.4548
C      423   PZ  62.5348
C      BORAL SLOTS
5000    PX -17.43075
5001    PX -16.85925
5002    PX -15.24
5003    PX -7.62
5004    PX -6.00075
5005    PX -5.42925
5006    PX -3.81
5007    PX  3.81
5008    PX  5.42925
5009    PX  6.00075
5010    PX  7.62
5011    PX  15.24
5012    PX  16.85925
5013    PX  17.43075
6000    PY  16.09725
6001    PY  15.52575
6002    PY  14.351
6003    PY  6.731
6004    PY  5.55625
```

```
6005   PY  4.98475
6006   PY  3.81
6007   PY -3.81
6008   PY -4.98475
6009   PY -5.55625
6010   PY -6.731
6011   PY -14.351
6012   PY -15.52575
6013   PY -16.09725
C     JACKET SURFACES
501   CZ 61.595
502   CZ 60.325
503   CZ 52.705
504   CZ 51.435
601   PZ -102.235
6021  PZ -90.4875
6022  PZ -91.1225
6023  PZ -91.7575
602   PZ -100.33
603   PZ -92.075
605   PZ 92.3925
606   PZ 104.775
607   PZ 106.68
608   PZ 167.64 $ TOP OF TORUS
C     SURFACES FOR TALLY AT 2M FROM
C      THE SIDE AND 21 FEET FROM SIDE
C     FROM SURF 501
1001  CZ  261.595
1002  CZ  701.675
C     FROM SURFACE 601, ADD 24" FOR THE TORUS AT
C     THE BOTTOM,THEN 0.5" STEEL, 11.5" SPACE FOR
C     DOSE CALCS. NO PALLET INCLUDED
1004  PZ -163.195
1005  PZ -164.465
1006  PZ -193.675
C     2 METER CALCULATIONS
1007  PZ -393.675 $ BOTTOM +2 M
1008  PZ  367.64  $ TOP:SURF 607+24"+2 M
1009  CZ  161.595 $ SIDE:SURF 501+1 M
C     ACCIDENT CONDITION:BOTTOM
1110  PZ  -232.715

C     OTHER CARDS
SDEF  WGT=1 CEL=D1 ERG=D2 Z=D3
      X FCEL D4 Y FCEL D5
SI1   L 101 102 103 104 105 106 107 108
        109 110 111 112 113 114 115 116
        117 118 119 120 121
SP1   D 1 1 1 1 1 1 1 1 1 1 1
        1 1 1 1 1 1 1 1 1 1
SI2   L 1.5E-02 2.5E-02 3.5E-02 4.5E-02 5.5E-02
        6.5E-02 7.5E-02 8.5E-02 9.5E-02 1.5E-01
        2.5E-01 3.5E-01 4.75E-01 6.5E-01 8.25E-01
        1.0000 1.225 1.475 1.7 1.9 2.1 2.3 2.5
        2.7 3.0
SP2   D 2.790E+13 1.968E+13 1.236E+13 7.682E+12 5.798E+12
        4.281E+12 3.494E+12 3.308E+13 2.218E+12 1.612E+14
        4.599E+11 1.437E+11 1.282E+14 8.101E+14 4.021E+13
        8.661E+12 4.015E+12 6.433E+12 7.323E+10 1.870E-04
        1.002E+13 4.990E+11 2.890E-06 0.0000000 1.060E-07
SI3     -71.68896 42.61104
```

```
SP3      0 1
DS4      S 62 63 64 61 62 63 64 65 61 62 63 64
         65 61 62 63 64 65 62 63 64
DS5      S 71 71 71 72 72 72 72 72 73 73 73 73 73
         74 74 74 74 74 75 75 75
SI61     -27.305 -18.415
SP61     0 1
SI62     -15.875 -6.985
SP62     0 1
SI63     -4.445 4.445
SP63     0 1
SI64     6.985 15.875
SP64     0 1
SI65     18.415 27.305
SP65     0 1
SI71     17.0815 25.0825
SP71     0 1
SI72     6.5405 14.5415
SP72     0 1
SI73     -4.0005 4.0005
SP73     0 1
SI74     -14.5415 -6.5405
SP74     0 1
SI75     -25.0825 -17.0815
SP75     0 1
MODE    P
IMP:P   1 20R 3 23R 3 41R 1 8R $ FUEL,BORAL,FUEL SPACES,INGOT
        1 2 3 4 12 36 108 324 972 $CASK SIDES
        2916 2916
        12 24 48 96 192 384 786 1536 3072 6144 $ CASK BOTTOM
        12 96 1536                  $ LID OF CASK
        24 48 96 192 384 786 1536 1536  $LEAD ON TOP
        2916 2916 5832 11664 23328 11664 23328 46656 1R 93312 2R $JACKET
        93312 186624 5R 0 $ OUTSIDE VOLUMES
PRINT
PRDMP 1J 3000000
NPS    6000000
C      MATERIAL CARDS
M1     26000 -0.72 25055 -0.02 24000 -0.18 28000 -0.08
M2     82000 1.0
M3     13000 -0.9135 92000 -0.0427
       8000  -0.0167
       40000 -0.0046 42000 -0.0039 44000 -0.0021
       54000 -0.0062 55000 -0.0028 58000 -0.0029
       60000 -0.0046
M4     7000 .7809 8000 .2095 18000 .0096
M5     5000 3.39449E-03  13000 5.8001E-02  $ BORATED AL;98% B-10 IN B
M6     74000 -0.95 28000 -0.03 29000 -0.02 $ TUNGSTEN ALLOY
M7     26000 -1.0
C      TALLY CARDS
FC5  DOSES(IN MREM/HR) AT BOTTOM
*F5:P 0 0 -193.675 0
FM5  1.287E+18
FC15  DOSES(IN MREM/HR) AT BOTTOM: 2M
      FROM BOTTOM OF BED
*F15:P 0 0 -393.67 0
FM15  1.287E+18
C      GAMMA FLUX TO DOSE FACTORS ARE THE SET ACCOMPANYING
C      THE CODE,ISOSHIELD  FROM RSIC
DE0    1.5E-2 2.5E-2 3.5E-2 4.5E-2 5.5E-2 6.5E-2 7.5E-2
       8.5E-2 9.5E-2 1.5E-1 2.5E-1 3.5E-1 4.75E-1 6.5E-1
```

```
      8.25E-1 1.000 1.225 1.475 1.700 1.900 2.100 2.300
      2.500 2.700 3.000
DF0   8.230E-5 1.730E-5 6.349E-6 3.280E-6 2.289E-6 1.891E-6
      1.714E-6 1.618E-6 1.603E-6 1.728E-6 1.960E-6 2.060E-6
      2.039E-6 2.080E-6 2.000E-6 1.930E-6 1.841E-6 1.761E-6
      1.710E-6 1.660E-6 1.600E-6 1.540E-6 1.520E-6 1.480E-6 1.430E-6
```

5.6.2 Sample MCNP input for Neutron Dose Rate Calculations

```
MOCKUP OF MODEL 2000 SHIPPING CONTAINER-SPENT FUEL-93% ENC
C     0.0 INCH OF TUNGSTEN AT THE BOTTOM OF RACK...
C     TOTAL 52.0 IN;
C     DEFINITION OF SURFACE CHANGED TO BE DEFINED AS
C     BOTTOM OF THE FLAT-BED CAR; ALSO BOTTOM OF FUEL
C     NOW 1" FROM BOTTOM OF CASK
C     NEUTRON SOURCE AT 880 DAYS COOLING IS MAINLY FROM
C     SPONTANEOUS FISSION OF CM244 AND ALPHA,N SOURCE
C     ALPHA,N IS 7.21E+5 AND TOTAL SPONT. FISSION IS 2.808E+5
C     TOTAL IS 1.0018E+6 N/SEC
C     ...0.280 CM244 SP FISS AND 0.720 ALPHA,N AT ABOUT 5MEV
C     DUKE ROGERS DATED 10/9/95
C
C
C
C     CELL CARDS
C     FUEL RACK
C     FUEL ELEMENTS
101   3 -1.01683    -411 412 403 -404 421 -422
102   3 -1.01683    -411 412 405 -406 421 -422
103   3 -1.01683    -411 412 407 -408 421 -422
104   3 -1.01683    -413 414 401 -402 421 -422
105   3 -1.01683    -413 414 403 -404 421 -422
106   3 -1.01683    -413 414 405 -406 421 -422
107   3 -1.01683    -413 414 407 -408 421 -422
108   3 -1.01683    -413 414 409 -410 421 -422
109   3 -1.01683    -415 416 401 -402 421 -422
110   3 -1.01683    -415 416 403 -404 421 -422
111   3 -1.01683    -415 416 405 -406 421 -422
112   3 -1.01683    -415 416 407 -408 421 -422
113   3 -1.01683    -415 416 409 -410 421 -422
114   3 -1.01683    -417 418 401 -402 421 -422
115   3 -1.01683    -417 418 403 -404 421 -422
116   3 -1.01683    -417 418 405 -406 421 -422
117   3 -1.01683    -417 418 407 -408 421 -422
118   3 -1.01683    -417 418 409 -410 421 -422
119   3 -1.01683    -419 420 403 -404 421 -422
120   3 -1.01683    -419 420 405 -406 421 -422
121   3 -1.01683    -419 420 407 -408 421 -422
C     BORAL SLOTS
201   5 0.061395   -6000 6001 5002 -5003 202 -423
202   5 0.061395   -6000 6001 5006 -5007 202 -423
203   5 0.061395   -6000 6001 5010 -5011 202 -423
204   5 0.061395   5000 -5001 -6002 6003 202 -423
205   5 0.061395   5004 -5005 -6002 6003 202 -423
206   5 0.061395   5008 -5009 -6002 6003 202 -423
207   5 0.061395   5012 -5013 -6002 6003 202 -423
208   5 0.061395   -6004 6005 5002 -5003 202 -423
209   5 0.061395   -6004 6005 5006 -5007 202 -423
210   5 0.061395   -6004 6005 5010 -5011 202 -423
```

```
211    5 0.061395   5000 -5001 -6006 6007 202 -423
212    5 0.061395   5004 -5005 -6006 6007 202 -423
213    5 0.061395   5008 -5009 -6006 6007 202 -423
214    5 0.061395   5012 -5013 -6006 6007 202 -423
215    5 0.061395   -6008 6009 5002 -5003 202 -423
216    5 0.061395   -6008 6009 5006 -5007 202 -423
217    5 0.061395   -6008 6009 5010 -5011 202 -423
218    5 0.061395   5000 -5001 -6010 6011 202 -423
219    5 0.061395   5004 -5005 -6010 6011 202 -423
220    5 0.061395   5008 -5009 -6010 6011 202 -423
221    5 0.061395   5012 -5013 -6010 6011 202 -423
222    5 0.061395   -6012 6013 5002 -5003 202 -423
223    5 0.061395   -6012 6013 5006 -5007 202 -423
224    5 0.061395   -6012 6013 5010 -5011 202 -423
C      SPACE BELOW FUEL
301    4 -0.001293  -411 412 403 -404 202 -421
302    4 -0.001293  -411 412 405 -406 202 -421
303    4 -0.001293  -411 412 407 -408 202 -421
304    4 -0.001293  -413 414 401 -402 202 -421
305    4 -0.001293  -413 414 403 -404 202 -421
306    4 -0.001293  -413 414 405 -406 202 -421
307    4 -0.001293  -413 414 407 -408 202 -421
308    4 -0.001293  -413 414 409 -410 202 -421
309    4 -0.001293  -415 416 401 -402 202 -421
310    4 -0.001293  -415 416 403 -404 202 -421
311    4 -0.001293  -415 416 405 -406 202 -421
312    4 -0.001293  -415 416 407 -408 202 -421
313    4 -0.001293  -415 416 409 -410 202 -421
314    4 -0.001293  -417 418 401 -402 202 -421
315    4 -0.001293  -417 418 403 -404 202 -421
316    4 -0.001293  -417 418 405 -406 202 -421
317    4 -0.001293  -417 418 407 -408 202 -421
318    4 -0.001293  -417 418 409 -410 202 -421
319    4 -0.001293  -419 420 403 -404 202 -421
320    4 -0.001293  -419 420 405 -406 202 -421
321    4 -0.001293  -419 420 407 -408 202 -421
C      SPACE ABOVE FUEL
322    4 -0.001293  -411 412 403 -404 422 -423
323    4 -0.001293  -411 412 405 -406 422 -423
324    4 -0.001293  -411 412 407 -408 422 -423
325    4 -0.001293  -413 414 401 -402 422 -423
326    4 -0.001293  -413 414 403 -404 422 -423
327    4 -0.001293  -413 414 405 -406 422 -423
328    4 -0.001293  -413 414 407 -408 422 -423
329    4 -0.001293  -413 414 409 -410 422 -423
330    4 -0.001293  -415 416 401 -402 422 -423
331    4 -0.001293  -415 416 403 -404 422 -423
332    4 -0.001293  -415 416 405 -406 422 -423
333    4 -0.001293  -415 416 407 -408 422 -423
334    4 -0.001293  -415 416 409 -410 422 -423
335    4 -0.001293  -417 418 401 -402 422 -423
336    4 -0.001293  -417 418 403 -404 422 -423
337    4 -0.001293  -417 418 405 -406 422 -423
338    4 -0.001293  -417 418 407 -408 422 -423
339    4 -0.001293  -417 418 409 -410 422 -423
340    4 -0.001293  -419 420 403 -404 422 -423
341    4 -0.001293  -419 420 405 -406 422 -423
342    4 -0.001293  -419 420 407 -408 422 -423
C      ST. STEEL INGOT
122    1 -7.80  (411:-412:-403:404)
                #201  (-401:402:413:-414)
```

```
                #204 (-403:404:413:-414)
                -2001 2003 -301 202 -423
123   1 -7.80    (-407:408:411:-412) #203
                 (-407:408:413:-414) #207
                 (-409:410:413:-414)
                2002 2003 -301 202 -423
124   1 -7.80   (417:-418:-401:402) #218
                (417:-418:-403:404) #222
                (419:-420:-403:404)
                -2004 -2001 -301 202 -423
125   1 -7.80   (417:-418:-407:408) #221
                (-409:410:417:-418) #224
                (-407:408:419:-420)
                2002 -2004 -301 202 -423
126   1 -7.80   (411:-412:-405:406) #202
                (413:-414:-405:406) #205 #206
                2001 -2002 2003
                -301 202 -423
127   1 -7.80   (417:-418:-405:406) #223
                (419:-420:-405:406) #219 #220
                 2001 -2002 -2004
                -301 202 -423
128    1 -7.80 (-401:402:415:-416) #208
                (-403:404:415:-416) #211 #215
               -2001 2004 -2003
                -301 202 -423
129    1 -7.80 (-407:408:415:-416) #210
                (-409:410:415:-416) #214 #217
                2002 -2003 2004
                -301 202 -423
130    1 -7.80 (-405:406:415:-416) #209 #212 #213 #216
                2001 -2002 -2003 2004 202 -423
C     CASK
1     4 -0.001293      -104 -204 202 (301:423) $INSIDE OF CASK
2     1 -7.80     -103 104 -206 202 $ INNER SIDE OF CASK
3     1 -7.80     (-102 109 -208 206):
                (-206 -102 103 203)  $ UPPER PART OF THE SIDES
C     LEAD ON THE SIDE
4     2 -11.34     -203 202 103 -1061
401   2 -11.34     -203 202 1061 -1062
402   2 -11.34     -203 202 1062 -1063
403   2 -11.34     -203 202 1063 -1064
404   2 -11.34     -203 202 1064 -106
405   2 -11.34     (-203 210 106 -102):(202 -209 106 -102)
5     1 -7.80     (-101 102 -208 210):
                (-209 -101 102 202)  $ OUTER SIDE OF CASK
6     1 -7.80     -105 106 -210 209 $ LIFTING EAR
C     BOTTOM OF CASK
7     1 -7.80     -202 29 -101
71    1 -7.8      -29 28 -101
72    1 -7.8      -28 27 -101
73    1 -7.8      -27 26 -101
74    1 -7.8      -26 25 -101
75    1 -7.8      -25 24 -101
76    1 -7.8      -24 23 -101
77    1 -7.8      -23 22 -101
78    1 -7.8      -22 21 -101
79    1 -7.8      -21 201 -101
C     LID OF CASK
8     1 -7.80     -109 -207 206
81    1 -7.80     -206 -104 108 205
```

```
82     1 -7.80      -205 204 -104
C      LEAD IN THE LID
9      2 -11.34      205 -30 -108
91     2 -11.34      30 -31 -108
92     2 -11.34      31 -32 -108
93     2 -11.34      32 -33 -108
94     2 -11.34      33 -34 -108
95     2 -11.34      34 -35 -108
96     2 -11.34      35 -206 -108
90     4 -0.001293        -208 207 -109  $ AIR GAP ABOVE LID
C      JACKET
17     4 -0.001293       -504 -605 201 ((101:208) (210:-209:105)) $ JACKET/CASK
SPACE
18     4 -0.001293       605 -606 -504 $ TOP HONEY COMB
19     1 -7.80      (-503 504 603 -606):(-504 -201 603) $ INNER SHELL
20     4 -0.001293       (-502 503 -606 602):(-503 602 -603) $ BOTTOM AND SIDE
GAPS
21     1 -7.80      (-501 502 601 -607):(-502 -607 606):
                (-502 601 -602) $ OUTER SHELL
29     4 -0.001293  -608 607 -501 $TOP OVER PACK
30     4 -0.001293  -601 1004 -501 $ BOTTOM OVERPACK
C      SPACE OUTSIDE OVERPACK FOR DOSE READINGS
22     4 -0.001293 (501:608) -1009 1004 -1008
23     7 -7.86      -1009 -1004 1005
24     4 -0.001293 -1009 -1005 1006
25     4 -0.001293 -1009 -1006 1110
26     4 -0.001293 -1009 -1110 1007
27     4 -0.001293 1009 -1001 1007 -1008
28     4 -0.001293 1001 -1002 1007 -1008
31     0           (1002:1008:-1007)

C      SURFACE CARDS
101    CZ 48.895
102    CZ 46.355
103    CZ 36.195
104    CZ 33.655
105    CZ 50.4825
106    CZ 44.7675
1061   CZ 37.7
1062   CZ 39.2
1063   CZ 40.7
1064   CZ 42.2
C      107   CZ 33.5026
108    CZ 29.6926
109    CZ 43.815
201    PZ -90.17
21     PZ -88.67
22     PZ -87.17
23     PZ -85.67
24     PZ -84.17
25     PZ -82.67
26     PZ -81.17
27     PZ -79.67
28     PZ -78.17
29     PZ -76.67
202    PZ -74.6252
203    PZ  67.31
204    PZ  63.50
205    PZ  67.31
30     PZ  69.31
31     PZ  71.31
```

```
32     PZ  73.31
33     PZ  75.31
34     PZ  77.31
35     PZ  79.31
206    PZ  80.9752
207    PZ  85.4202
208    PZ  90.17
209    PZ  29.845
210    PZ  55.245
C      PARTITIONS FOR INGOT
2001   PX  -6.492875
2002   PX   6.492875
2003   PY   6.048375
2004   PY  -6.048375
C      FUEL LATTICE SURFACES
301    CZ  33.3375
401    PX -27.305
402    PX -18.415
403    PX -15.875
404    PX -6.985
405    PX -4.445
406    PX 4.445
407    PX 6.985
408    PX 15.875
409    PX 18.415
410    PX 27.305
411    PY 25.0825
412    PY 17.0815
413    PY 14.5415
414    PY 6.5405
415    PY 4.0005
416    PY -4.0005
417    PY -6.5405
418    PY -14.5415
419    PY -17.0815
420    PY -25.0825
C      421   PZ -61.9252
421    PZ -72.0852 $ REFLECTS A 1 INCH SPACE FROM BOTTOM
422    PZ  42.2148 $ MOVED SO THAT FUEL COLUMN IS 45 INCHES
C      422   PZ  52.3748
423    PZ  57.4548
C      423   PZ  62.5348
C      BORAL SLOTS
5000    PX -17.43075
5001    PX -16.85925
5002    PX -15.24
5003    PX -7.62
5004    PX -6.00075
5005    PX -5.42925
5006    PX -3.81
5007    PX  3.81
5008    PX  5.42925
5009    PX  6.00075
5010    PX  7.62
5011    PX  15.24
5012    PX  16.85925
5013    PX  17.43075
6000    PY  16.09725
6001    PY  15.52575
6002    PY  14.351
6003    PY  6.731
```

```
6004    PY  5.55625
6005    PY  4.98475
6006    PY  3.81
6007    PY -3.81
6008    PY -4.98475
6009    PY -5.55625
6010    PY -6.731
6011    PY -14.351
6012    PY -15.52575
6013    PY -16.09725
C      JACKET SURFACES
501    CZ 61.595
502    CZ 60.325
503    CZ 52.705
504    CZ 51.435
601    PZ -102.235
602    PZ -100.33
603    PZ -92.075
605    PZ 92.3925
606    PZ 104.775
607    PZ 106.68
608    PZ 167.64 $ TOP OF TORUS
C      SURFACES FOR TALLY AT 2M FROM
C       THE SIDE AND 21 FEET FROM SIDE
C      FROM SURF 501
1001   CZ  261.595
1002   CZ  701.675
C      FROM SURFACE 601, ADD 24" FOR THE TORUS AT
C      THE BOTTOM,THEN 0.5" STEEL, 11.5" SPACE FOR
C      DOSE CALCS. NO PALLET INCLUDED
1004   PZ -163.195
1005   PZ -164.465
1006   PZ -193.675
C      1 METER CALCULATIONS
1007   PZ -263.195 $ BOTTOM
1008   PZ  267.64  $ TOP:SURF 607+24"+1 M
1009   CZ  161.595 $ SIDE:SURF 501+1 M
C      ACCIDENT CONDITION:BOTTOM
1110   PZ  -232.715

C      OTHER CARDS
SDEF   WGT=1 CEL=D1 ERG=D2 Z=D3
       X FCEL D4 Y FCEL D5
SI1    L 101 102 103 104 105 106 107 108
         109 110 111 112 113 114 115 116
         117 118 119 120 121
SP1    D 1 1 1 1 1 1 1 1 1 1 1
         1 1 1 1 1 1 1 1 1 1
SI2    S 6 7
SP2    D 0.280 0.720
SI6    H 0.0 20.0
SP6    -3 0.906 3.8483
SI7    L 5.0
SP7    D 1.0
SI3      -61.9252 52.3748
SP3      0 1
DS4      S 62 63 64 61 62 63 64 65 61 62 63 64
         65 61 62 63 64 65 62 63 64
DS5      S 71 71 71 72 72 72 72 72 73 73 73 73 73
         74 74 74 74 74 75 75 75
SI61     -27.305 -18.415
```

```
SP61     0 1
SI62     -15.875 -6.985
SP62     0 1
SI63     -4.445 4.445
SP63     0 1
SI64     6.985 15.875
SP64     0 1
SI65     18.415 27.305
SP65     0 1
SI71     17.0815 25.0825
SP71     0 1
SI72     6.5405 14.5415
SP72     0 1
SI73     -4.0005 4.0005
SP73     0 1
SI74     -14.5415 -6.5405
SP74     0 1
SI75     -25.0825 -17.0815
SP75     0 1
MODE    N
C       IMP:N  1 20R 3 23R 3 41R 1 8R $ FUEL,BORAL,FUEL SPACES,INGOT
C        1 2 3 4 12 36 108 324 972 $CASK SIDES
C        2916 2916
C        12 24 48 96 192 384 786 1536 3072 6144 $ CASK BOTTOM
C        12 96 1536                  $ LID OF CASK
C        24 48 96 192 384 786 1536 1536  $LEAD ON TOP
C        2916 2916 5832 1R 11664 2R     $JACKET
C        11664 23328 5R 0 $ OUTSIDE VOLUMES
IMP:N    1 141R 0
PRINT
PRDMP 1J 2000000
NPS   4000000
C     MATERIAL CARDS
M1    26000.00C -0.72 25055.00C -0.02 24000.00C -0.18
      28000.00C -0.08
M2    82000.50C 1.0
M3    13027.00C -0.9135 92235.00C -0.0427
      8016.00C  -0.0167
      45117.90C -0.0271  $ AVG FP FROM U235
M4    7014.50C .7809 8016.00C .2191
M5    5010.00C 3.39449E-03  13027.00C 5.8001E-02  $ BORATED AL;98% B-10 IN B
C     M6    74000 -0.90 28000 -0.06 29000 -0.04 $ TUNGSTEN ALLOY
M7    26000.00C -1.0
C     TALLY CARDS
FC2   DOSE ON SIDE OF CASK AT 1.0018E+6 N/SEC
      COVERSION TO MILLIREM/HR
F2:N  (101 105)
FM2   1.0018E+09
FC12  DOSE ON SIDE OF PACKAGE AT 1.0018E+06 N/SEC
      CONVERSION TO MILLIREM/HR & 1M FROM IT
F12:N 501 1009
FS12  -202 -421 -422 -423 T
FM12  1.0018E+09
FC22  DOSE ON THE  BOTTOM  1.0018E+06 N/SEC
      SHELL, OVERPACK, BOT OF TRUCK BED
F22:N 601  1004
FS22   -301 T
FM22  1.0018E+09
FC32  DOSES AT 1M FROM  BOTTOM INCL ACCIDENT CONDITION
F32:N  1006 1007 1110
FS32  -501 T
```

```
FM32  1.0018E+09
FC42  DOSES AT 2M FROM SIDE AND IN THE CAB
F42:N 1001 1002
FS42   -601 -607 T
FM42  1.0018E+09
C     NEUTRON FLUX TO DOSE FACTORS ARE THE SET ACCOMPANYING
C     THE CODE,MCNP:ANSI/ANS.6.1.1-1977
DE0   2.5E-08 1.0E-07 1.0E-06 1.0E-05 1.0E-04 1.0E-03
      1.0E-02 1.0E-01 5.0E-01 1.0     2.5
      5.0     7.0     10.0    14.0    20.0
DF0   3.67E-06  3.67E-06 4.46E-06 4.54E-06 4.18E-06 3.76E-06
      3.56E-06 2.17E-05 9.26E-05 1.32E-04 1.25E-04 1.56E-04
      1.47E-04 1.47E-04 2.08E-04 2.27E-04
```

5.6.3 Summary of the TSR Core Dose Rates Calculation

The dose rates, external to the Model 2000 shipping container, were conservatively estimated by modeling the entire irradiated TSR core as a sphere located inside the cask cavity. The following parameters were used as input to the RIBD/ISOSHLD code:

Core operating power	1 MW
Integrated operating time	83.33 days
U-235 absorption cross section	683 barns
U-235 fission cross section	577 barns
U-238 capture cross section	2.68 barns
Total mass of U-235 in core	8451 grams
Uranium enrichment	93.2%
Thermal neutron flux	2.47E12 neutrons/cm^2/s
U-239 production rate	3.57E-4 grams per MWd
Decay time	2 years

The calculated dose rates with the spherical source located at the nearest location inside the cavity (i.e., at the inner wall, at the lid, or on the bottom), are presented below:

Side surface of overpack	51 mrem/h
1 meter from side	4.3 mrem/h
2 meters from side	1.5 mrem/h
21 feet from center (cab of truck)	0.2 mrem/h
Top surface of overpack	1.0 mrem/h
1 meter from top	0.3 mrem/h
2 meters from top	0.1 mrem/h
Bottom surface of pallet	220 mrem/h
1 meter from bottom	56 mrem/h
2 meters from bottom	25 mrem/h

These dose rates are all less than the worst case analysis presented in the body of Section 5. The RIBD calculated decay heat from the TSR core, for the above conditions is 17.7 Watts. No neutron shielding calculations were performed for the 93.2% enriched TSR core since the neutron dose rates would be comparable to the MTR numbers presented in Table 5.1A. The total dose rates would be within the specified limits.

5.6.4 RIBD Code Output File for the 20% Enrichment Fuel

```
CASE I.D.  ORR   FUEL SOURCE, 22.5 MW 156  DAY    WRITTEN BY   SUBROUTINE
FROG. PETE'S VERSION OF RIBD


CONVERSION RATIO G(U-239)/MWD   0.019

SCRAM REACTIVITY, MILLI-K      0.

PROMPT NEUTRON LIFE, MSEC       0.

NUMBER OF EXTRA DECAY CARDS   0

OUTPUT OPTION REQUESTED        1

FUEL POWER, MEGAWATTS         2.2500E 01

TIME AT THIS POWER, DAYS      1.5600E 02

EXPOSURE (FLUX*SIGMA25*TIME)  6.0570E-01

U-235 ABSORPTION CROSS-SECT.  6.8300E 02

PU239 FISSIONS/U235 FISSIONS  0.

NUMBER OF EXTRA IRRAD. CARDS      0



DECAY POINTS - SECONDS

     1.037E 07    1.858E 07    2.678E 07    3.499E 07    4.320E 07    5.141E
07    5.962E 07    6.782E 07    7.603E 07


 ORR   FUEL SOURCE, 22.5 MW 156  DAY  ACTIVITY AFTER SHUTDOWN - CURIES
3510.0 MWD IN  156.0 DAYS.
                          AT. NO. 30 ZN

 ISOTOPE
              SHUTDOWN 120.0 DAYS 215.0 DAYS 310.0 DAYS   1.1 YRS.   1.4 YRS.
1.6 YRS.   1.9 YRS.   2.2 YRS.   2.4 YRS.
  ZN  72    1.189E 01  2.704E-18  4.701E-33  0.         0.         0.
0.         0.         0.         0.
  ZN  73    1.015E 01  0.         0.         0.         0.         0.
0.         0.         0.         0.
  TOTAL     2.204E 01  2.704E-18  4.701E-33  0.         0.         0.
0.         0.         0.         0.

CONCENTRATION AFTER SHUTDOWN - GRAM ATOMS
  ZN  72    1.764E-07  4.013E-26  0.         0.         0.         0.
0.         0.         0.         0.
  ZN  73    1.080E-10  0.         0.         0.         0.         0.
0.         0.         0.         0.
  TOTAL     1.765E-07  4.013E-26  0.         0.         0.         0.
0.         0.         0.         0.
```

ORR FUEL SOURCE, 22.5 MW 156 DAY ACTIVITY AFTER SHUTDOWN - CURIES
3510.0 MWD IN 156.0 DAYS.

AT. NO. 31 GA

ISOTOPE	SHUTDOWN	120.0 DAYS	215.0 DAYS	310.0 DAYS	1.1 YRS.	1.4 YRS.	1.6 YRS.	1.9 YRS.	2.2 YRS.	2.4 YRS.
GA 72	1.185E 01	3.881E-18	6.747E-33	0.	0.	0.	0.	0.	0.	0.
GA 73	1.037E 01	0.	0.	0.	0.	0.	0.	0.	0.	0.
GA 74	3.625E 01	0.	0.	0.	0.	0.	0.	0.	0.	0.
GA 75	4.143E 01	0.	0.	0.	0.	0.	0.	0.	0.	0.
GA 76	1.036E 02	0.	0.	0.	0.	0.	0.	0.	0.	0.
TOTAL	2.035E 02	3.881E-18	6.747E-33	0.	0.	0.	0.	0.	0.	0.

CONCENTRATION AFTER SHUTDOWN - GRAM ATOMS

GA 72	5.331E-08	1.746E-26	0.	0.	0.	0.	0.	0.	0.	0.
GA 73	1.588E-08	0.	0.	0.	0.	0.	0.	0.	0.	0.
GA 74	1.542E-09	0.	0.	0.	0.	0.	0.	0.	0.	0.
GA 75	4.407E-10	0.	0.	0.	0.	0.	0.	0.	0.	0.
GA 76	2.938E-10	0.	0.	0.	0.	0.	0.	0.	0.	0.
TOTAL	7.147E-08	1.746E-26	0.	0.	0.	0.	0.	0.	0.	0.

ORR FUEL SOURCE, 22.5 MW 156 DAY ACTIVITY AFTER SHUTDOWN - CURIES
3510.0 MWD IN 156.0 DAYS.

AT. NO. 32 GE

ISOTOPE	SHUTDOWN	120.0 DAYS	215.0 DAYS	310.0 DAYS	1.1 YRS.	1.4 YRS.	1.6 YRS.	1.9 YRS.	2.2 YRS.	2.4 YRS.
GE 72	0.	0.	0.	0.	0.	0.	0.	0.	0.	0.
GE 73	0.	0.	0.	0.	0.	0.	0.	0.	0.	0.
GE 74	0.	0.	0.	0.	0.	0.	0.	0.	0.	0.
GE* 75	4.144E 01	0.	0.	0.	0.	0.	0.	0.	0.	0.
GE 75	8.291E 01	0.	0.	0.	0.	0.	0.	0.	0.	0.
GE 76	0.	0.	0.	0.	0.	0.	0.	0.	0.	0.
GE* 77	5.593E 02	0.	0.	0.	0.	0.	0.	0.	0.	0.
GE 77	5.862E 02	0.	0.	0.	0.	0.	0.	0.	0.	0.
GE 78	1.865E 03	0.	0.	0.	0.	0.	0.	0.	0.	0.

```
  TOTAL      3.135E 03  0.          0.          0.          0.          0.
0.          0.          0.          0.

CONCENTRATION AFTER SHUTDOWN - GRAM ATOMS
  GE  72     6.368E-06  6.598E-06  6.598E-06  6.598E-06  6.598E-06  6.598E-06
6.598E-06  6.598E-06  6.598E-06  6.598E-06
  GE  73     1.169E-05  1.171E-05  1.171E-05  1.171E-05  1.171E-05  1.171E-05
1.171E-05  1.171E-05  1.171E-05  1.171E-05
  GE  74     4.133E-05  4.133E-05  4.133E-05  4.133E-05  4.133E-05  4.133E-05
4.133E-05  4.133E-05  4.133E-05  4.133E-05
  GE* 75     1.800E-10  0.          0.          0.          0.          0.
0.          0.          0.          0.
  GE  75     3.615E-08  0.          0.          0.          0.          0.
0.          0.          0.          0.
  GE  76     2.357E-04  2.357E-04  2.357E-04  2.357E-04  2.357E-04  2.357E-04
2.357E-04  2.357E-04  2.357E-04  2.357E-04
  GE* 77     2.677E-09  0.          0.          0.          0.          0.
0.          0.          0.          0.
  GE  77     2.119E-06  0.          0.          0.          0.          0.
0.          0.          0.          0.
  GE  78     8.854E-07  0.          0.          0.          0.          0.
0.          0.          0.          0.
  TOTAL      2.982E-04  2.954E-04  2.954E-04  2.954E-04  2.954E-04  2.954E-04
2.954E-04  2.954E-04  2.954E-04  2.954E-04


 ORR   FUEL SOURCE, 22.5 MW 156  DAY  ACTIVITY AFTER SHUTDOWN - CURIES
3510.0 MWD IN  156.0 DAYS.
                              AT. NO. 33 AS

 ISOTOPE
              SHUTDOWN 120.0 DAYS 215.0 DAYS 310.0 DAYS   1.1 YRS.   1.4 YRS.
1.6 YRS.   1.9 YRS.   2.2 YRS.   2.4 YRS.
  AS  75     0.          0.          0.          0.          0.          0.
0.          0.          0.          0.
  AS  76     4.500E-01  8.445E-34  0.          0.          0.          0.
0.          0.          0.          0.
  AS  77     9.528E 02  6.961E-20  0.          0.          0.          0.
0.          0.          0.          0.
  AS  78     2.073E 03  0.          0.          0.          0.          0.
0.          0.          0.          0.
  AS  79     4.143E 03  0.          0.          0.          0.          0.
0.          0.          0.          0.
  AS  80     8.286E 03  0.          0.          0.          0.          0.
0.          0.          0.          0.
  AS  81     1.295E 04  0.          0.          0.          0.          0.
0.          0.          0.          0.
  AS  85     6.783E 04  0.          0.          0.          0.          0.
0.          0.          0.          0.
  TOTAL      9.624E 04  6.961E-20  0.          0.          0.          0.
0.          0.          0.          0.

CONCENTRATION AFTER SHUTDOWN - GRAM ATOMS
  AS  75     9.407E-05  9.411E-05  9.411E-05  9.411E-05  9.411E-05  9.411E-05
9.411E-05  9.411E-05  9.411E-05  9.411E-05
  AS  76     3.804E-09  0.          0.          0.          0.          0.
0.          0.          0.          0.
  AS  77     1.186E-05  8.662E-28  0.          0.          0.          0.
0.          0.          0.          0.
```

```
  AS  78    1.005E-06  0.         0.         0.         0.         0.
0.         0.         0.         0.
  AS  79    1.983E-07  0.         0.         0.         0.         0.
0.         0.         0.         0.
  AS  80    1.101E-08  0.         0.         0.         0.         0.
0.         0.         0.         0.
  AS  81    3.786E-08  0.         0.         0.         0.         0.
0.         0.         0.         0.
  AS  85    2.585E-09  0.         0.         0.         0.         0.
0.         0.         0.         0.
  TOTAL     1.072E-04  9.411E-05  9.411E-05  9.411E-05  9.411E-05  9.411E-05
9.411E-05  9.411E-05  9.411E-05  9.411E-05


 ORR   FUEL SOURCE, 22.5 MW 156  DAY  ACTIVITY AFTER SHUTDOWN - CURIES
3510.0 MWD IN  156.0 DAYS.
                          AT. NO. 34 SE

 ISOTOPE
              SHUTDOWN 120.0 DAYS 215.0 DAYS 310.0 DAYS   1.1 YRS.   1.4 YRS.
1.6 YRS.   1.9 YRS.   2.2 YRS.   2.4 YRS.
  SE  76    0.         0.         0.         0.         0.         0.
0.         0.         0.         0.
  SE* 77    4.659E-03  0.         0.         0.         0.         0.
0.         0.         0.         0.
  SE  77    0.         0.         0.         0.         0.         0.
0.         0.         0.         0.
  SE  78    0.         0.         0.         0.         0.         0.
0.         0.         0.         0.
  SE* 79    4.144E 03  0.         0.         0.         0.         0.
0.         0.         0.         0.
  SE  79    2.410E-02  2.410E-02  2.410E-02  2.410E-02  2.410E-02  2.410E-02
2.410E-02  2.410E-02  2.410E-02  2.410E-02
  SE  80    0.         0.         0.         0.         0.         0.
0.         0.         0.         0.
  SE* 81    8.715E 02  0.         0.         0.         0.         0.
0.         0.         0.         0.
  SE  81    1.382E 04  0.         0.         0.         0.         0.
0.         0.         0.         0.
  SE  82    0.         0.         0.         0.         0.         0.
0.         0.         0.         0.
  SE* 83    4.142E 04  0.         0.         0.         0.         0.
0.         0.         0.         0.
  SE  83    2.606E 04  0.         0.         0.         0.         0.
0.         0.         0.         0.
  SE  84    8.905E 03  0.         0.         0.         0.         0.
0.         0.         0.         0.
  SE  85    1.357E 05  0.         0.         0.         0.         0.
0.         0.         0.         0.
  SE  86    1.374E 05  0.         0.         0.         0.         0.
0.         0.         0.         0.
  SE  87    3.590E 05  0.         0.         0.         0.         0.
0.         0.         0.         0.
  TOTAL     7.273E 05  2.410E-02  2.410E-02  2.410E-02  2.410E-02  2.410E-02
2.410E-02  2.410E-02  2.410E-02  2.410E-02

CONCENTRATION AFTER SHUTDOWN - GRAM ATOMS
  SE  76    1.976E-07  2.014E-07  2.014E-07  2.014E-07  2.014E-07  2.014E-07
2.014E-07  2.014E-07  2.014E-07  2.014E-07
```

```
  SE* 77    7.431E-15  0.         0.         0.         0.         0.
0.         0.         0.         0.
  SE  77    1.038E-03  1.052E-03  1.052E-03  1.052E-03  1.052E-03  1.052E-03
1.052E-03  1.052E-03  1.052E-03  1.052E-03
  SE  78    2.376E-03  2.378E-03  2.378E-03  2.378E-03  2.378E-03  2.378E-03
2.378E-03  2.378E-03  2.378E-03  2.378E-03
  SE* 79    8.594E-08  0.         0.         0.         0.         0.
0.         0.         0.         0.
  SE  79    4.715E-03  4.716E-03  4.716E-03  4.716E-03  4.716E-03  4.716E-03
4.716E-03  4.716E-03  4.715E-03  4.715E-03
  SE  80    9.428E-03  9.428E-03  9.428E-03  9.428E-03  9.428E-03  9.428E-03
9.428E-03  9.428E-03  9.428E-03  9.428E-03
  SE* 81    2.641E-07  0.         0.         0.         0.         0.
0.         0.         0.         0.
  SE  81    1.323E-06  0.         0.         0.         0.         0.
0.         0.         0.         0.
  SE  82    4.479E-06  4.479E-06  4.479E-06  4.479E-06  4.479E-06  4.479E-06
4.479E-06  4.479E-06  4.479E-06  4.479E-06
  SE* 83    2.533E-07  0.         0.         0.         0.         0.
0.         0.         0.         0.
  SE  83    3.464E-06  0.         0.         0.         0.         0.
0.         0.         0.         0.
  SE  84    1.562E-07  0.         0.         0.         0.         0.
0.         0.         0.         0.
  SE  85    4.689E-07  0.         0.         0.         0.         0.
0.         0.         0.         0.
  SE  86    1.948E-07  0.         0.         0.         0.         0.
0.         0.         0.         0.
  SE  87    5.091E-07  0.         0.         0.         0.         0.
0.         0.         0.         0.
  TOTAL     1.757E-02  1.758E-02  1.758E-02  1.758E-02  1.758E-02  1.758E-02
1.758E-02  1.758E-02  1.758E-02  1.758E-02


 ORR   FUEL SOURCE, 22.5 MW 156  DAY  ACTIVITY AFTER SHUTDOWN - CURIES
3510.0 MWD IN  156.0 DAYS.
                          AT. NO. 35 BR

 ISOTOPE
              SHUTDOWN 120.0 DAYS 215.0 DAYS 310.0 DAYS   1.1 YRS.   1.4 YRS.
1.6 YRS.   1.9 YRS.   2.2 YRS.   2.4 YRS.
  BR  79    0.         0.         0.         0.         0.         0.
0.         0.         0.         0.
  BR* 80    3.382E-05  0.         0.         0.         0.         0.
0.         0.         0.         0.
  BR  80    1.334E-04  0.         0.         0.         0.         0.
0.         0.         0.         0.
  BR  81    0.         0.         0.         0.         0.         0.
0.         0.         0.         0.
  BR  82    4.995E 01  1.371E-23  0.         0.         0.         0.
0.         0.         0.         0.
  BR  83    7.474E 04  0.         0.         0.         0.         0.
0.         0.         0.         0.
  BR* 84    2.830E 03  0.         0.         0.         0.         0.
0.         0.         0.         0.
  BR  84    1.413E 05  0.         0.         0.         0.         0.
0.         0.         0.         0.
  BR  85    1.909E 05  0.         0.         0.         0.         0.
0.         0.         0.         0.
```

```
  BR  86    2.748E 05  0.          0.          0.          0.          0.
0.          0.          0.          0.
  BR  87    3.590E 05  0.          0.          0.          0.          0.
0.          0.          0.          0.
  BR  88    3.952E 05  0.          0.          0.          0.          0.
0.          0.          0.          0.
  BR  89    2.675E 04  0.          0.          0.          0.          0.
0.          0.          0.          0.
  BR  90    3.538E 05  0.          0.          0.          0.          0.
0.          0.          0.          0.
  TOTAL     1.819E 06  1.371E-23  0.          0.          0.          0.
0.          0.          0.          0.

CONCENTRATION AFTER SHUTDOWN - GRAM ATOMS
  BR  79    1.094E-08  2.629E-08  3.845E-08  5.059E-08  6.275E-08  7.490E-08
8.706E-08  9.921E-08  1.114E-07  1.235E-07
  BR* 80    4.856E-14  0.          0.          0.          0.          0.
0.          0.          0.          0.
  BR  80    1.277E-14  0.          0.          0.          0.          0.
0.          0.          0.          0.
  BR  81    1.570E-02  1.570E-02  1.570E-02  1.570E-02  1.570E-02  1.570E-02
1.570E-02  1.570E-02  1.570E-02  1.570E-02
  BR  82    5.627E-07  1.544E-31  0.          0.          0.          0.
0.          0.          0.          0.
  BR  83    5.723E-05  0.          0.          0.          0.          0.
0.          0.          0.          0.
  BR* 84    9.031E-08  0.          0.          0.          0.          0.
0.          0.          0.          0.
  BR  84    2.404E-05  0.          0.          0.          0.          0.
0.          0.          0.          0.
  BR  85    3.045E-06  0.          0.          0.          0.          0.
0.          0.          0.          0.
  BR  86    1.315E-06  0.          0.          0.          0.          0.
0.          0.          0.          0.
  BR  87    1.750E-06  0.          0.          0.          0.          0.
0.          0.          0.          0.
  BR  88    5.605E-07  0.          0.          0.          0.          0.
0.          0.          0.          0.
  BR  89    1.067E-08  0.          0.          0.          0.          0.
0.          0.          0.          0.
  BR  90    5.018E-08  0.          0.          0.          0.          0.
0.          0.          0.          0.
  TOTAL     1.579E-02  1.570E-02  1.570E-02  1.570E-02  1.570E-02  1.570E-02
1.570E-02  1.570E-02  1.570E-02  1.570E-02


 ORR   FUEL SOURCE, 22.5 MW 156  DAY  ACTIVITY AFTER SHUTDOWN - CURIES
3510.0 MWD IN  156.0 DAYS.
                          AT. NO. 36 KR

 ISOTOPE
              SHUTDOWN 120.0 DAYS 215.0 DAYS 310.0 DAYS   1.1 YRS.   1.4 YRS.
1.6 YRS.   1.9 YRS.   2.2 YRS.   2.4 YRS.
  KR  80    0.          0.          0.          0.          0.          0.
0.          0.          0.          0.
  KR  81    0.          0.          0.          0.          0.          0.
0.          0.          0.          0.
  KR  82    0.          0.          0.          0.          0.          0.
0.          0.          0.          0.
```

```
  KR* 83    7.475E 04  0.         0.         0.         0.         0.
0.         0.         0.         0.
  KR  83    0.         0.         0.         0.         0.         0.
0.         0.         0.         0.
  KR  84    0.         0.         0.         0.         0.         0.
0.         0.         0.         0.
  KR* 85    1.910E 05  0.         0.         0.         0.         0.
0.         0.         0.         0.
  KR  85    1.355E 03  1.329E 03  1.307E 03  1.285E 03  1.263E 03  1.242E 03
1.222E 03  1.201E 03  1.181E 03  1.162E 03
  KR  86    0.         0.         0.         0.         0.         0.
0.         0.         0.         0.
  KR  87    3.590E 05  0.         0.         0.         0.         0.
0.         0.         0.         0.
  KR  88    5.059E 05  0.         0.         0.         0.         0.
0.         0.         0.         0.
  KR  89    6.239E 05  0.         0.         0.         0.         0.
0.         0.         0.         0.
  KR  90    7.076E 05  0.         0.         0.         0.         0.
0.         0.         0.         0.
  KR  91    4.919E 05  0.         0.         0.         0.         0.
0.         0.         0.         0.
  KR  92    4.116E 05  0.         0.         0.         0.         0.
0.         0.         0.         0.
  KR  93    2.010E 05  0.         0.         0.         0.         0.
0.         0.         0.         0.
  KR  94    1.139E 05  0.         0.         0.         0.         0.
0.         0.         0.         0.
  KR  95    5.815E 05  0.         0.         0.         0.         0.
0.         0.         0.         0.
  KR  97    4.392E 05  0.         0.         0.         0.         0.
0.         0.         0.         0.
  TOTAL     4.703E 06  1.329E 03  1.307E 03  1.285E 03  1.263E 03  1.242E 03
1.222E 03  1.201E 03  1.181E 03  1.162E 03

CONCENTRATION AFTER SHUTDOWN - GRAM ATOMS
  KR  80    3.848E-11  3.855E-11  3.855E-11  3.855E-11  3.855E-11  3.855E-11
3.855E-11  3.855E-11  3.855E-11  3.855E-11
  KR  81    1.317E-13  1.317E-13  1.317E-13  1.317E-13  1.317E-13  1.317E-13
1.317E-13  1.317E-13  1.317E-13  1.317E-13
  KR  82    2.212E-05  2.269E-05  2.269E-05  2.269E-05  2.269E-05  2.269E-05
2.269E-05  2.269E-05  2.269E-05  2.269E-05
  KR* 83    4.436E-05  0.         0.         0.         0.         0.
0.         0.         0.         0.
  KR  83    6.257E-02  6.268E-02  6.268E-02  6.268E-02  6.268E-02  6.268E-02
6.268E-02  6.268E-02  6.268E-02  6.268E-02
  KR  84    1.416E-01  1.416E-01  1.416E-01  1.416E-01  1.416E-01  1.416E-01
1.416E-01  1.416E-01  1.416E-01  1.416E-01
  KR* 85    2.681E-04  0.         0.         0.         0.         0.
0.         0.         0.         0.
  KR  85    4.076E-02  3.995E-02  3.929E-02  3.863E-02  3.799E-02  3.736E-02
3.674E-02  3.613E-02  3.553E-02  3.494E-02
  KR  86    2.682E-01  2.682E-01  2.682E-01  2.682E-01  2.682E-01  2.682E-01
2.682E-01  2.682E-01  2.682E-01  2.682E-01
  KR  87    1.451E-04  0.         0.         0.         0.         0.
0.         0.         0.         0.
  KR  88    4.521E-04  0.         0.         0.         0.         0.
0.         0.         0.         0.
  KR  89    1.062E-05  0.         0.         0.         0.         0.
0.         0.         0.         0.
```

```
  KR  90    2.069E-06  0.         0.         0.         0.         0.
0.         0.         0.         0.
  KR  91    4.358E-07  0.         0.         0.         0.         0.
0.         0.         0.         0.
  KR  92    1.094E-07  0.         0.         0.         0.         0.
0.         0.         0.         0.
  KR  93    3.564E-08  0.         0.         0.         0.         0.
0.         0.         0.         0.
  KR  94    1.413E-08  0.         0.         0.         0.         0.
0.         0.         0.         0.
  KR  95    5.152E-08  0.         0.         0.         0.         0.
0.         0.         0.         0.
  KR  97    3.891E-08  0.         0.         0.         0.         0.
0.         0.         0.         0.
  TOTAL     5.141E-01  5.125E-01  5.119E-01  5.112E-01  5.106E-01  5.099E-01
5.093E-01  5.087E-01  5.081E-01  5.075E-01


 ORR   FUEL SOURCE, 22.5 MW 156  DAY  ACTIVITY AFTER SHUTDOWN - CURIES
3510.0 MWD IN  156.0 DAYS.
□
AT. NO. 37 RB

 ISOTOPE
□              SHUTDOWN 120.0 DAYS 215.0 DAYS 310.0 DAYS   1.1 YRS.   1.4 YRS.
1.6 YRS.   1.9 YRS.   2.2 YRS.   2.4 YRS.
  RB  85    0.         0.         0.         0.         0.         0.
0.         0.         0.         0.
  RB* 86    1.677E 01  0.         0.         0.         0.         0.
0.         0.         0.         0.
  RB  86    1.473E 02  1.722E 00  5.086E-02  1.509E-03  4.456E-05  1.316E-06
3.887E-08  1.148E-09  3.406E-11  1.006E-12
  RB  87    0.         0.         0.         0.         0.         0.
0.         0.         0.         0.
  RB  88    5.060E 05  0.         0.         0.         0.         0.
0.         0.         0.         0.
  RB  89    6.447E 05  0.         0.         0.         0.         0.
0.         0.         0.         0.
  RB  90    8.051E 05  0.         0.         0.         0.         0.
0.         0.         0.         0.
  RB* 91    2.727E 05  0.         0.         0.         0.         0.
0.         0.         0.         0.
  RB  91    5.480E 05  0.         0.         0.         0.         0.
0.         0.         0.         0.
  RB  92    8.344E 05  0.         0.         0.         0.         0.
0.         0.         0.         0.
  RB  93    6.791E 05  0.         0.         0.         0.         0.
0.         0.         0.         0.
  RB  94    4.815E 05  0.         0.         0.         0.         0.
0.         0.         0.         0.
  RB  95    1.163E 06  0.         0.         0.         0.         0.
0.         0.         0.         0.
  RB  97    8.783E 05  0.         0.         0.         0.         0.
0.         0.         0.         0.
  TOTAL     6.813E 06  1.722E 00  5.086E-02  1.509E-03  4.456E-05  1.316E-06
3.887E-08  1.148E-09  3.406E-11  1.006E-12

CONCENTRATION AFTER SHUTDOWN - GRAM ATOMS
  RB  85    1.566E-01  1.577E-01  1.584E-01  1.590E-01  1.597E-01  1.603E-01
1.609E-01  1.615E-01  1.621E-01  1.627E-01
```

```
  RB* 86    9.277E-11  0.         0.         0.         0.         0.
0.         0.         0.         0.
  RB  86    2.109E-05  2.466E-07  7.283E-09  2.160E-10  6.380E-12  1.885E-13
5.566E-15  1.644E-16  4.876E-18  1.440E-19
  RB  87    3.542E-01  3.543E-01  3.543E-01  3.543E-01  3.543E-01  3.543E-01
3.543E-01  3.543E-01  3.543E-01  3.543E-01
  RB  88    4.843E-05  0.         0.         0.         0.         0.
0.         0.         0.         0.
  RB  89    5.144E-05  0.         0.         0.         0.         0.
0.         0.         0.         0.
  RB  90    1.242E-05  0.         0.         0.         0.         0.
0.         0.         0.         0.
  RB* 91    2.030E-05  0.         0.         0.         0.         0.
0.         0.         0.         0.
  RB  91    3.499E-06  0.         0.         0.         0.         0.
0.         0.         0.         0.
  RB  92    3.917E-07  0.         0.         0.         0.         0.
0.         0.         0.         0.
  RB  93    3.370E-07  0.         0.         0.         0.         0.
0.         0.         0.         0.
  RB  94    1.280E-07  0.         0.         0.         0.         0.
0.         0.         0.         0.
  RB  95    2.061E-07  0.         0.         0.         0.         0.
0.         0.         0.         0.
  RB  97    1.557E-07  0.         0.         0.         0.         0.
0.         0.         0.         0.
  TOTAL     5.109E-01  5.120E-01  5.127E-01  5.133E-01  5.140E-01  5.146E-01
5.152E-01  5.158E-01  5.164E-01  5.170E-01


 ORR   FUEL SOURCE, 22.5 MW 156  DAY  ACTIVITY AFTER SHUTDOWN - CURIES
3510.0 MWD IN  156.0 DAYS.

AT. NO. 38 SR

 ISOTOPE
              SHUTDOWN 120.0 DAYS 215.0 DAYS 310.0 DAYS   1.1 YRS.   1.4 YRS.
1.6 YRS.   1.9 YRS.   2.2 YRS.   2.4 YRS.
  SR  86    0.         0.         0.         0.         0.         0.
0.         0.         0.         0.
  SR* 87    3.653E-04  0.         0.         0.         0.         0.
0.         0.         0.         0.
  SR  87    0.         0.         0.         0.         0.         0.
0.         0.         0.         0.
  SR  88    0.         0.         0.         0.         0.         0.
0.         0.         0.         0.
  SR  89    6.321E 05  1.277E 05  3.597E 04  1.015E 04  2.861E 03  8.061E 02
2.272E 02  6.401E 01  1.806E 01  5.090E 00
  SR  90    9.957E 03  9.876E 03  9.813E 03  9.750E 03  9.687E 03  9.625E 03
9.563E 03  9.502E 03  9.441E 03  9.380E 03
  SR  91    8.223E 05  0.         0.         0.         0.         0.
0.         0.         0.         0.
  SR  92    9.028E 05  0.         0.         0.         0.         0.
0.         0.         0.         0.
  SR  93    1.000E 06  0.         0.         0.         0.         0.
0.         0.         0.         0.
  SR  94    9.233E 05  0.         0.         0.         0.         0.
0.         0.         0.         0.
  SR  95    1.163E 06  0.         0.         0.         0.         0.
0.         0.         0.         0.
```

```
  SR  97    8.783E 05  0.         0.         0.         0.         0.
0.         0.         0.         0.
  TOTAL     6.332E 06  1.375E 05  4.579E 04  1.990E 04  1.255E 04  1.043E 04
9.790E 03  9.566E 03  9.459E 03  9.385E 03

CONCENTRATION AFTER SHUTDOWN - GRAM ATOMS
  SR  86    5.697E-05  7.781E-05  7.805E-05  7.806E-05  7.806E-05  7.806E-05
7.806E-05  7.806E-05  7.806E-05  7.806E-05
  SR* 87    3.264E-13  0.         0.         0.         0.         0.
0.         0.         0.         0.
  SR  87    9.361E-11  9.394E-11  9.394E-11  9.394E-11  9.394E-11  9.394E-11
9.394E-11  9.394E-11  9.394E-11  9.394E-11
  SR  88    4.915E-01  4.920E-01  4.920E-01  4.920E-01  4.920E-01  4.920E-01
4.920E-01  4.920E-01  4.920E-01  4.920E-01
  SR  89    2.517E-01  5.083E-02  1.432E-02  4.043E-03  1.139E-03  3.210E-04
9.045E-05  2.549E-05  7.193E-06  2.027E-06
  SR  90    7.792E-01  7.729E-01  7.679E-01  7.630E-01  7.581E-01  7.532E-01
7.484E-01  7.436E-01  7.388E-01  7.341E-01
  SR  91    2.545E-03  0.         0.         0.         0.         0.
0.         0.         0.         0.
  SR  92    7.777E-04  0.         0.         0.         0.         0.
0.         0.         0.         0.
  SR  93    4.414E-05  0.         0.         0.         0.         0.
0.         0.         0.         0.
  SR  94    6.377E-06  0.         0.         0.         0.         0.
0.         0.         0.         0.
  SR  95    4.948E-06  0.         0.         0.         0.         0.
0.         0.         0.         0.
  SR  97    2.335E-07  0.         0.         0.         0.         0.
0.         0.         0.         0.
  TOTAL     1.526E 00  1.316E 00  1.274E 00  1.259E 00  1.251E 00  1.246E 00
1.241E 00  1.236E 00  1.231E 00  1.226E 00


 ORR   FUEL SOURCE, 22.5 MW 156  DAY  ACTIVITY AFTER SHUTDOWN - CURIES
3510.0 MWD IN  156.0 DAYS.

AT. NO. 39  Y

 ISOTOPE
              SHUTDOWN 120.0 DAYS 215.0 DAYS 310.0 DAYS   1.1 YRS.   1.4 YRS.
1.6 YRS.   1.9 YRS.   2.2 YRS.   2.4 YRS.
   Y* 89    1.264E 02  2.553E 01  7.195E 00  2.031E 00  5.722E-01  1.612E-01
4.543E-02  1.280E-02  3.613E-03  1.018E-03
  Y   89    0.         0.         0.         0.         0.         0.
0.         0.         0.         0.
  Y*  90    4.240E-01  0.         0.         0.         0.         0.
0.         0.         0.         0.
  Y   90    1.026E 04  9.879E 03  9.815E 03  9.752E 03  9.690E 03  9.627E 03
9.566E 03  9.504E 03  9.443E 03  9.383E 03
  Y*  91    4.852E 05  0.         0.         0.         0.         0.
0.         0.         0.         0.
  Y   91    7.679E 05  1.889E 05  6.187E 04  2.029E 04  6.644E 03  2.176E 03
7.125E 02  2.333E 02  7.652E 01  2.506E 01
  Y   92    9.036E 05  0.         0.         0.         0.         0.
0.         0.         0.         0.
  Y   93    1.016E 06  0.         0.         0.         0.         0.
0.         0.         0.         0.
  Y   94    1.060E 06  0.         0.         0.         0.         0.
0.         0.         0.         0.
```

```
  Y   95    1.163E 06  0.         0.         0.         0.         0.
0.         0.         0.         0.
  Y   96    5.544E 05  0.         0.         0.         0.         0.
0.         0.         0.         0.
  Y   97    8.783E 05  0.         0.         0.         0.         0.
0.         0.         0.         0.
  TOTAL     6.839E 06  1.988E 05  7.170E 04  3.004E 04  1.633E 04  1.180E 04
1.028E 04  9.738E 03  9.520E 03  9.408E 03

CONCENTRATION AFTER SHUTDOWN - GRAM ATOMS
   Y* 89    1.793E-10  3.621E-11  1.020E-11  2.880E-12  8.114E-13  2.286E-13
6.443E-14  1.815E-14  5.123E-15  1.444E-15
  Y   89    3.810E-01  5.819E-01  6.184E-01  6.287E-01  6.316E-01  6.324E-01
6.327E-01  6.327E-01  6.327E-01  6.327E-01
  Y*  90    4.328E-10  0.         0.         0.         0.         0.
0.         0.         0.         0.
  Y   90    2.102E-04  2.024E-04  2.011E-04  1.998E-04  1.985E-04  1.972E-04
1.959E-04  1.947E-04  1.934E-04  1.922E-04
  Y*  91    1.290E-04  0.         0.         0.         0.         0.
0.         0.         0.         0.
  Y   91    3.469E-01  8.536E-02  2.795E-02  9.167E-03  3.002E-03  9.830E-04
3.219E-04  1.054E-04  3.457E-05  1.132E-05
  Y   92    1.018E-03  0.         0.         0.         0.         0.
0.         0.         0.         0.
  Y   93    3.274E-03  0.         0.         0.         0.         0.
0.         0.         0.         0.
  Y   94    1.127E-04  0.         0.         0.         0.         0.
0.         0.         0.         0.
  Y   95    6.494E-05  0.         0.         0.         0.         0.
0.         0.         0.         0.
  Y   96    6.779E-06  0.         0.         0.         0.         0.
0.         0.         0.         0.
  Y   97    3.114E-07  0.         0.         0.         0.         0.
0.         0.         0.         0.
  TOTAL     7.327E-01  6.675E-01  6.466E-01  6.381E-01  6.348E-01  6.336E-01
6.332E-01  6.330E-01  6.330E-01  6.330E-01


 ORR   FUEL SOURCE, 22.5 MW 156  DAY  ACTIVITY AFTER SHUTDOWN - CURIES
3510.0 MWD IN  156.0 DAYS.

AT. NO. 40 ZR

 ISOTOPE
              SHUTDOWN 120.0 DAYS 215.0 DAYS 310.0 DAYS   1.1 YRS.   1.4 YRS.
1.6 YRS.   1.9 YRS.   2.2 YRS.   2.4 YRS.
  ZR  90    0.         0.         0.         0.         0.         0.
0.         0.         0.         0.
  ZR  91    0.         0.         0.         0.         0.         0.
0.         0.         0.         0.
  ZR  92    0.         0.         0.         0.         0.         0.
0.         0.         0.         0.
  ZR  93    3.454E-01  3.467E-01  3.467E-01  3.467E-01  3.467E-01  3.467E-01
3.467E-01  3.467E-01  3.467E-01  3.467E-01
  ZR  94    0.         0.         0.         0.         0.         0.
0.         0.         0.         0.
  ZR  95    9.562E 05  2.659E 05  9.653E 04  3.509E 04  1.274E 04  4.624E 03
1.679E 03  6.093E 02  2.215E 02  8.040E 01
  ZR  96    0.         0.         0.         0.         0.         0.
0.         0.         0.         0.
```

```
  ZR  97    1.130E 06  0.         0.         0.         0.         0.
0.         0.         0.         0.
  ZR  98    2.934E 04  0.         0.         0.         0.         0.
0.         0.         0.         0.
  ZR  99    5.789E 05  0.         0.         0.         0.         0.
0.         0.         0.         0.
  TOTAL     2.694E 06  2.659E 05  9.653E 04  3.509E 04  1.274E 04  4.624E 03
1.679E 03  6.097E 02  2.218E 02  8.075E 01

CONCENTRATION AFTER SHUTDOWN - GRAM ATOMS
  ZR  90    4.322E-03  1.065E-02  1.561E-02  2.054E-02  2.544E-02  3.032E-02
3.516E-02  3.996E-02  4.474E-02  4.948E-02
  ZR  91    4.412E-01  7.055E-01  7.629E-01  7.817E-01  7.878E-01  7.899E-01
7.905E-01  7.907E-01  7.908E-01  7.908E-01
  ZR  92    8.410E-01  8.428E-01  8.428E-01  8.428E-01  8.428E-01  8.428E-01
8.428E-01  8.428E-01  8.428E-01  8.428E-01
  ZR  93    9.172E-01  9.206E-01  9.206E-01  9.206E-01  9.206E-01  9.206E-01
9.206E-01  9.206E-01  9.206E-01  9.206E-01
  ZR  94    9.437E-01  9.438E-01  9.438E-01  9.438E-01  9.438E-01  9.438E-01
9.438E-01  9.438E-01  9.438E-01  9.438E-01
  ZR  95    4.759E-01  1.324E-01  4.805E-02  1.746E-02  6.340E-03  2.301E-03
8.355E-04  3.033E-04  1.102E-04  4.002E-05
  ZR  96    9.575E-01  9.575E-01  9.575E-01  9.575E-01  9.575E-01  9.575E-01
9.575E-01  9.575E-01  9.575E-01  9.575E-01
  ZR  97    6.127E-03  0.         0.         0.         0.         0.
0.         0.         0.         0.
  ZR  98    1.560E-07  0.         0.         0.         0.         0.
0.         0.         0.         0.
  ZR  99    8.210E-08  0.         0.         0.         0.         0.
0.         0.         0.         0.
  TOTAL     4.587E 00  4.513E 00  4.491E 00  4.484E 00  4.484E 00  4.487E 00
4.491E 00  4.496E 00  4.500E 00  4.505E 00


 ORR   FUEL SOURCE, 22.5 MW 156  DAY  ACTIVITY AFTER SHUTDOWN - CURIES
3510.0 MWD IN  156.0 DAYS.

AT. NO. 41 NB

 ISOTOPE
              SHUTDOWN 120.0 DAYS 215.0 DAYS 310.0 DAYS   1.1 YRS.   1.4 YRS.
1.6 YRS.   1.9 YRS.   2.2 YRS.   2.4 YRS.
  NB* 93    3.461E-03  8.430E-03  1.215E-02  1.569E-02  1.907E-02  2.229E-02
2.535E-02  2.827E-02  3.104E-02  3.369E-02
  NB  93    0.         0.         0.         0.         0.         0.
0.         0.         0.         0.
  NB* 94    1.192E-04  0.         0.         0.         0.         0.
0.         0.         0.         0.
  NB  94    6.515E-10  6.515E-10  6.515E-10  6.515E-10  6.515E-10  6.515E-10
6.515E-10  6.515E-10  6.515E-10  6.515E-10
  NB* 95    1.887E 04  5.644E 03  2.049E 03  7.447E 02  2.703E 02  9.814E 01
3.563E 01  1.293E 01  4.701E 00  1.706E 00
  NB  95    7.615E 05  4.549E 05  1.908E 05  7.328E 04  2.720E 04  9.965E 03
3.631E 03  1.320E 03  4.802E 02  1.744E 02
  NB  96    1.887E 03  0.         0.         0.         0.         0.
0.         0.         0.         0.
  NB* 97    1.017E 06  0.         0.         0.         0.         0.
0.         0.         0.         0.
  NB  97    1.130E 06  0.         0.         0.         0.         0.
0.         0.         0.         0.
```

```
  NB* 98    1.525E 04  0.         0.         0.         0.         0.
0.         0.         0.         0.
  NB  98    5.854E 05  0.         0.         0.         0.         0.
0.         0.         0.         0.
  NB  99    1.158E 06  0.         0.         0.         0.         0.
0.         0.         0.         0.
  NB 100    1.265E 06  0.         0.         0.         0.         0.
0.         0.         0.         0.
  NB 101    5.133E 05  0.         0.         0.         0.         0.
0.         0.         0.         0.
  TOTAL     6.465E 06  4.606E 05  1.929E 05  7.402E 04  2.747E 04  1.006E 04
3.667E 03  1.333E 03  4.850E 02  1.761E 02

CONCENTRATION AFTER SHUTDOWN - GRAM ATOMS
  NB* 93    3.581E-08  8.721E-08  1.257E-07  1.624E-07  1.973E-07  2.306E-07
2.623E-07  2.924E-07  3.211E-07  3.485E-07
  NB  93    1.113E-07  2.807E-07  4.170E-07  5.550E-07  6.949E-07  8.365E-07
9.796E-07  1.124E-06  1.270E-06  1.418E-06
  NB* 94    4.182E-15  0.         0.         0.         0.         0.
0.         0.         0.         0.
  NB  94    3.642E-11  3.642E-11  3.642E-11  3.642E-11  3.642E-11  3.642E-11
3.642E-11  3.642E-11  3.642E-11  3.642E-11
  NB* 95    5.418E-04  1.621E-04  5.883E-05  2.138E-05  7.763E-06  2.818E-06
1.023E-06  3.714E-07  1.350E-07  4.900E-08
  NB  95    2.041E-01  1.219E-01  5.115E-02  1.964E-02  7.290E-03  2.671E-03
9.732E-04  3.539E-04  1.287E-04  4.673E-05
  NB  96    1.385E-05  0.         0.         0.         0.         0.
0.         0.         0.         0.
  NB* 97    5.406E-06  0.         0.         0.         0.         0.
0.         0.         0.         0.
  NB  97    4.325E-04  0.         0.         0.         0.         0.
0.         0.         0.         0.
  NB* 98    4.176E-06  0.         0.         0.         0.         0.
0.         0.         0.         0.
  NB  98    5.200E-06  0.         0.         0.         0.         0.
0.         0.         0.         0.
  NB  99    1.539E-05  0.         0.         0.         0.         0.
0.         0.         0.         0.
  NB 100    2.017E-05  0.         0.         0.         0.         0.
0.         0.         0.         0.
  NB 101    2.729E-06  0.         0.         0.         0.         0.
0.         0.         0.         0.
  TOTAL     2.051E-01  1.221E-01  5.121E-02  1.966E-02  7.298E-03  2.675E-03
9.755E-04  3.556E-04  1.304E-04  4.855E-05


 ORR   FUEL SOURCE, 22.5 MW 156  DAY  ACTIVITY AFTER SHUTDOWN - CURIES
3510.0 MWD IN  156.0 DAYS.

AT. NO. 42 MO

 ISOTOPE
              SHUTDOWN 120.0 DAYS 215.0 DAYS 310.0 DAYS   1.1 YRS.   1.4 YRS.
1.6 YRS.   1.9 YRS.   2.2 YRS.   2.4 YRS.
  MO  94    0.         0.         0.         0.         0.         0.
0.         0.         0.         0.
  MO  95    0.         0.         0.         0.         0.         0.
0.         0.         0.         0.
  MO  96    0.         0.         0.         0.         0.         0.
0.         0.         0.         0.
```

```
  MO  97    0.          0.          0.          0.          0.          0.
0.          0.          0.          0.
  MO  98    0.          0.          0.          0.          0.          0.
0.          0.          0.          0.
  MO  99    1.158E 06  8.428E-08  3.343E-18  1.365E-28  0.          0.
0.          0.          0.          0.
  MO 100    0.          0.          0.          0.          0.          0.
0.          0.          0.          0.
  MO 101    1.027E 06  0.          0.          0.          0.          0.
0.          0.          0.          0.
  MO 102    9.515E 05  0.          0.          0.          0.          0.
0.          0.          0.          0.
  MO 104    6.978E 05  0.          0.          0.          0.          0.
0.          0.          0.          0.
  MO 105    2.863E 05  0.          0.          0.          0.          0.
0.          0.          0.          0.
  TOTAL     4.121E 06  8.428E-08  3.343E-18  1.365E-28  0.          0.
0.          0.          0.          0.

CONCENTRATION AFTER SHUTDOWN - GRAM ATOMS
  MO  94    3.338E-14  3.380E-14  3.413E-14  3.445E-14  3.478E-14  3.511E-14
3.544E-14  3.577E-14  3.610E-14  3.643E-14
  MO  95    2.999E-01  7.261E-01  8.813E-01  9.434E-01  9.669E-01  9.756E-01
9.787E-01  9.799E-01  9.803E-01  9.805E-01
  MO  96    1.942E-03  1.956E-03  1.956E-03  1.956E-03  1.956E-03  1.956E-03
1.956E-03  1.956E-03  1.956E-03  1.956E-03
  MO  97    9.454E-01  9.520E-01  9.520E-01  9.520E-01  9.520E-01  9.520E-01
9.520E-01  9.520E-01  9.520E-01  9.520E-01
  MO  98    9.135E-01  9.135E-01  9.135E-01  9.135E-01  9.135E-01  9.135E-01
9.135E-01  9.135E-01  9.135E-01  9.135E-01
  MO  99    2.438E-02  1.775E-15  7.039E-26  2.874E-36  0.          0.
0.          0.          0.          0.
  MO 100    1.021E 00  1.021E 00  1.021E 00  1.021E 00  1.021E 00  1.021E 00
1.021E 00  1.021E 00  1.021E 00  1.021E 00
  MO 101    7.973E-05  0.          0.          0.          0.          0.
0.          0.          0.          0.
  MO 102    5.815E-05  0.          0.          0.          0.          0.
0.          0.          0.          0.
  MO 104    5.936E-06  0.          0.          0.          0.          0.
0.          0.          0.          0.
  MO 105    1.015E-06  0.          0.          0.          0.          0.
0.          0.          0.          0.
  TOTAL     3.207E 00  3.615E 00  3.770E 00  3.832E 00  3.856E 00  3.864E 00
3.868E 00  3.869E 00  3.869E 00  3.869E 00


 ORR   FUEL SOURCE, 22.5 MW 156  DAY  ACTIVITY AFTER SHUTDOWN - CURIES
3510.0 MWD IN  156.0 DAYS.

AT. NO. 43 TC

 ISOTOPE
              SHUTDOWN 120.0 DAYS 215.0 DAYS 310.0 DAYS   1.1 YRS.   1.4 YRS.
1.6 YRS.   1.9 YRS.   2.2 YRS.   2.4 YRS.
  TC* 99    1.065E 06  8.529E-08  3.383E-18  1.381E-28  0.          0.
0.          0.          0.          0.
  TC  99    1.573E 00  1.618E 00  1.618E 00  1.618E 00  1.618E 00  1.618E 00
1.618E 00  1.618E 00  1.618E 00  1.618E 00
  TC 100    2.176E 04  0.          0.          0.          0.          0.
0.          0.          0.          0.
```

```
  TC 101    1.027E 06  0.         0.         0.         0.         0.
0.         0.         0.         0.
  TC 102    9.515E 05  0.         0.         0.         0.         0.
0.         0.         0.         0.
  TC 103    4.050E 05  0.         0.         0.         0.         0.
0.         0.         0.         0.
  TC 104    6.978E 05  0.         0.         0.         0.         0.
0.         0.         0.         0.
  TC 105    4.295E 05  0.         0.         0.         0.         0.
0.         0.         0.         0.
  TC 107    0.         0.         0.         0.         0.         0.
0.         0.         0.         0.
  TOTAL     4.598E 06  1.618E 00  1.618E 00  1.618E 00  1.618E 00  1.618E 00
1.618E 00  1.618E 00  1.618E 00  1.618E 00

CONCENTRATION AFTER SHUTDOWN - GRAM ATOMS
  TC* 99    2.039E-03  1.633E-16  6.476E-27  2.644E-37  0.         0.
0.         0.         0.         0.
  TC  99    9.235E-01  9.499E-01  9.499E-01  9.499E-01  9.499E-01  9.499E-01
9.499E-01  9.499E-01  9.499E-01  9.499E-01
  TC 100    3.279E-08  0.         0.         0.         0.         0.
0.         0.         0.         0.
  TC 101    7.644E-05  0.         0.         0.         0.         0.
0.         0.         0.         0.
  TC 102    4.217E-07  0.         0.         0.         0.         0.
0.         0.         0.         0.
  TC 103    1.795E-06  0.         0.         0.         0.         0.
0.         0.         0.         0.
  TC 104    6.679E-05  0.         0.         0.         0.         0.
0.         0.         0.         0.
  TC 105    1.827E-05  0.         0.         0.         0.         0.
0.         0.         0.         0.
  TC 107    1.603E-01  1.603E-01  1.603E-01  1.603E-01  1.603E-01  1.603E-01
1.603E-01  1.603E-01  1.603E-01  1.603E-01
  TOTAL     1.086E 00  1.110E 00  1.110E 00  1.110E 00  1.110E 00  1.110E 00
1.110E 00  1.110E 00  1.110E 00  1.110E 00


 ORR   FUEL SOURCE, 22.5 MW 156  DAY  ACTIVITY AFTER SHUTDOWN - CURIES
3510.0 MWD IN  156.0 DAYS.

AT. NO. 44 RU

 ISOTOPE
              SHUTDOWN 120.0 DAYS 215.0 DAYS 310.0 DAYS   1.1 YRS.   1.4 YRS.
1.6 YRS.   1.9 YRS.   2.2 YRS.   2.4 YRS.
  RU  99    0.         0.         0.         0.         0.         0.
0.         0.         0.         0.
  RU 100    0.         0.         0.         0.         0.         0.
0.         0.         0.         0.
  RU 101    0.         0.         0.         0.         0.         0.
0.         0.         0.         0.
  RU 102    0.         0.         0.         0.         0.         0.
0.         0.         0.         0.
  RU 103    6.922E 05  8.649E 04  1.667E 04  3.218E 03  6.201E 02  1.195E 02
2.303E 01  4.438E 00  8.569E-01  1.651E-01
  RU 104    0.         0.         0.         0.         0.         0.
0.         0.         0.         0.
  RU 105    4.295E 05  0.         0.         0.         0.         0.
0.         0.         0.         0.
```

```
  RU 106     7.172E 04  5.710E 04  4.768E 04  3.981E 04  3.324E 04  2.775E 04
2.317E 04  1.934E 04  1.615E 04  1.349E 04
  RU 107     4.165E 03  0.         0.         0.         0.         0.
0.         0.         0.         0.
  RU 108     1.894E 05  0.         0.         0.         0.         0.
0.         0.         0.         0.
  TOTAL      1.387E 06  1.436E 05  6.434E 04  4.303E 04  3.386E 04  2.787E 04
2.319E 04  1.935E 04  1.615E 04  1.349E 04

CONCENTRATION AFTER SHUTDOWN - GRAM ATOMS
  RU  99     6.359E-07  1.666E-06  2.482E-06  3.297E-06  4.114E-06  4.930E-06
5.746E-06  6.563E-06  7.378E-06  8.194E-06
  RU 100     8.794E-03  8.794E-03  8.794E-03  8.794E-03  8.794E-03  8.794E-03
8.794E-03  8.794E-03  8.794E-03  8.794E-03
  RU 101     8.211E-01  8.212E-01  8.212E-01  8.212E-01  8.212E-01  8.212E-01
8.212E-01  8.212E-01  8.212E-01  8.212E-01
  RU 102     7.299E-01  7.299E-01  7.299E-01  7.299E-01  7.299E-01  7.299E-01
7.299E-01  7.299E-01  7.299E-01  7.299E-01
  RU 103     2.120E-01  2.649E-02  5.105E-03  9.857E-04  1.899E-04  3.660E-05
7.054E-06  1.359E-06  2.625E-07  5.058E-08
  RU 104     4.449E-01  4.450E-01  4.450E-01  4.450E-01  4.450E-01  4.450E-01
4.450E-01  4.450E-01  4.450E-01  4.450E-01
  RU 105     6.072E-04  0.         0.         0.         0.         0.
0.         0.         0.         0.
  RU 106     2.005E-01  1.596E-01  1.332E-01  1.113E-01  9.290E-02  7.756E-02
6.476E-02  5.406E-02  4.515E-02  3.769E-02
  RU 107     9.302E-08  0.         0.         0.         0.         0.
0.         0.         0.         0.
  RU 108     4.531E-06  0.         0.         0.         0.         0.
0.         0.         0.         0.
  TOTAL      2.418E 00  2.191E 00  2.143E 00  2.117E 00  2.098E 00  2.083E 00
2.070E 00  2.059E 00  2.050E 00  2.043E 00


 ORR   FUEL SOURCE, 22.5 MW 156  DAY  ACTIVITY AFTER SHUTDOWN - CURIES
3510.0 MWD IN  156.0 DAYS.

AT. NO. 45 RH

 ISOTOPE
              SHUTDOWN 120.0 DAYS 215.0 DAYS 310.0 DAYS   1.1 YRS.   1.4 YRS.
1.6 YRS.   1.9 YRS.   2.2 YRS.   2.4 YRS.
  RH*103     6.886E 05  8.614E 04  1.660E 04  3.205E 03  6.177E 02  1.190E 02
2.294E 01  4.420E 00  8.534E-01  1.645E-01
  RH 103     0.         0.         0.         0.         0.         0.
0.         0.         0.         0.
  RH*104     4.082E 03  0.         0.         0.         0.         0.
0.         0.         0.         0.
  RH 104     5.750E 04  0.         0.         0.         0.         0.
0.         0.         0.         0.
  RH*105     1.155E 05  0.         0.         0.         0.         0.
0.         0.         0.         0.
  RH 105     3.397E 05  3.291E-19  0.         0.         0.         0.
0.         0.         0.         0.
  RH*106     6.272E 04  0.         0.         0.         0.         0.
0.         0.         0.         0.
  RH 106     9.673E 04  5.710E 04  4.768E 04  3.981E 04  3.324E 04  2.775E 04
2.317E 04  1.934E 04  1.615E 04  1.349E 04
  RH 107     4.165E 03  0.         0.         0.         0.         0.
0.         0.         0.         0.
```

```
  RH 108     1.894E 05  0.          0.          0.          0.          0.
0.          0.          0.          0.
  RH 109     1.236E 05  0.          0.          0.          0.          0.
0.          0.          0.          0.
  TOTAL      1.682E 06  1.432E 05  6.427E 04  4.302E 04  3.386E 04  2.787E 04
2.319E 04  1.935E 04  1.615E 04  1.349E 04

CONCENTRATION AFTER SHUTDOWN - GRAM ATOMS
  RH*103     2.087E-04  2.611E-05  5.031E-06  9.714E-07  1.872E-07  3.607E-08
6.951E-09  1.340E-09  2.587E-10  4.984E-11
  RH 103     3.464E-01  5.321E-01  5.535E-01  5.576E-01  5.584E-01  5.586E-01
5.586E-01  5.586E-01  5.586E-01  5.586E-01
  RH*104     9.553E-08  0.          0.          0.          0.          0.
0.          0.          0.          0.
  RH 104     2.140E-07  0.          0.          0.          0.          0.
0.          0.          0.          0.
  RH*105     3.072E-07  0.          0.          0.          0.          0.
0.          0.          0.          0.
  RH 105     3.902E-03  3.780E-27  0.          0.          0.          0.
0.          0.          0.          0.
  RH*106     4.403E-05  0.          0.          0.          0.          0.
0.          0.          0.          0.
  RH 106     2.572E-07  1.518E-07  1.268E-07  1.058E-07  8.837E-08  7.378E-08
6.160E-08  5.143E-08  4.295E-08  3.586E-08
  RH 107     4.806E-07  0.          0.          0.          0.          0.
0.          0.          0.          0.
  RH 108     2.854E-07  0.          0.          0.          0.          0.
0.          0.          0.          0.
  RH 109     3.287E-07  0.          0.          0.          0.          0.
0.          0.          0.          0.
  TOTAL      3.505E-01  5.321E-01  5.535E-01  5.576E-01  5.584E-01  5.586E-01
5.586E-01  5.586E-01  5.586E-01  5.586E-01


 ORR   FUEL SOURCE, 22.5 MW 156  DAY  ACTIVITY AFTER SHUTDOWN - CURIES
3510.0 MWD IN  156.0 DAYS.

AT. NO. 46 PD

 ISOTOPE
              SHUTDOWN 120.0 DAYS 215.0 DAYS 310.0 DAYS   1.1 YRS.   1.4 YRS.
1.6 YRS.   1.9 YRS.   2.2 YRS.   2.4 YRS.
  PD 104     0.          0.          0.          0.          0.          0.
0.          0.          0.          0.
  PD 105     0.          0.          0.          0.          0.          0.
0.          0.          0.          0.
  PD 106     0.          0.          0.          0.          0.          0.
0.          0.          0.          0.
  PD 107     2.413E-04  2.414E-04  2.414E-04  2.414E-04  2.414E-04  2.414E-04
2.414E-04  2.414E-04  2.414E-04  2.414E-04
  PD 108     0.          0.          0.          0.          0.          0.
0.          0.          0.          0.
  PD*109     1.236E 05  0.          0.          0.          0.          0.
0.          0.          0.          0.
  PD 109     1.244E 05  0.          0.          0.          0.          0.
0.          0.          0.          0.
  PD 110     0.          0.          0.          0.          0.          0.
0.          0.          0.          0.
  PD*111     9.648E 02  0.          0.          0.          0.          0.
0.          0.          0.          0.
```

```
  PD 111     2.149E 04  0.          0.          0.          0.          0.
0.          0.          0.          0.
  PD 112     1.143E 04  0.          0.          0.          0.          0.
0.          0.          0.          0.
  PD 113     2.002E 03  0.          0.          0.          0.          0.
0.          0.          0.          0.
  PD 114     1.898E 03  0.          0.          0.          0.          0.
0.          0.          0.          0.
  PD 115     1.363E 03  0.          0.          0.          0.          0.
0.          0.          0.          0.
  PD 116     1.036E 03  0.          0.          0.          0.          0.
0.          0.          0.          0.
  TOTAL      2.882E 05  2.414E-04  2.414E-04  2.414E-04  2.414E-04  2.414E-04
2.414E-04  2.414E-04  2.414E-04  2.414E-04

CONCENTRATION AFTER SHUTDOWN - GRAM ATOMS
  PD 104     1.821E-02  1.821E-02  1.821E-02  1.821E-02  1.821E-02  1.821E-02
1.821E-02  1.821E-02  1.821E-02  1.821E-02
  PD 105     2.026E-01  2.071E-01  2.071E-01  2.071E-01  2.071E-01  2.071E-01
2.071E-01  2.071E-01  2.071E-01  2.071E-01
  PD 106     7.613E-02  1.170E-01  1.434E-01  1.654E-01  1.837E-01  1.991E-01
2.119E-01  2.226E-01  2.315E-01  2.389E-01
  PD 107     4.722E-03  4.722E-03  4.722E-03  4.722E-03  4.722E-03  4.722E-03
4.722E-03  4.722E-03  4.722E-03  4.722E-03
  PD 108     9.155E-02  9.155E-02  9.155E-02  9.155E-02  9.155E-02  9.155E-02
9.155E-02  9.155E-02  9.155E-02  9.155E-02
  PD*109     3.156E-06  0.          0.          0.          0.          0.
0.          0.          0.          0.
  PD 109     5.356E-04  0.          0.          0.          0.          0.
0.          0.          0.          0.
  PD 110     2.357E-03  2.357E-03  2.357E-03  2.357E-03  2.357E-03  2.357E-03
2.357E-03  2.357E-03  2.357E-03  2.357E-03
  PD*111     1.693E-06  0.          0.          0.          0.          0.
0.          0.          0.          0.
  PD 111     2.514E-06  0.          0.          0.          0.          0.
0.          0.          0.          0.
  PD 112     7.659E-05  0.          0.          0.          0.          0.
0.          0.          0.          0.
  PD 113     1.597E-08  0.          0.          0.          0.          0.
0.          0.          0.          0.
  PD 114     2.423E-08  0.          0.          0.          0.          0.
0.          0.          0.          0.
  PD 115     5.437E-09  0.          0.          0.          0.          0.
0.          0.          0.          0.
  PD 116     2.754E-09  0.          0.          0.          0.          0.
0.          0.          0.          0.
  TOTAL      3.961E-01  4.410E-01  4.673E-01  4.893E-01  5.077E-01  5.230E-01
5.358E-01  5.465E-01  5.554E-01  5.629E-01


 ORR   FUEL SOURCE, 22.5 MW 156  DAY  ACTIVITY AFTER SHUTDOWN - CURIES
3510.0 MWD IN  156.0 DAYS.

AT. NO. 47 AG

 ISOTOPE
              SHUTDOWN 120.0 DAYS 215.0 DAYS 310.0 DAYS   1.1 YRS.   1.4 YRS.
1.6 YRS.   1.9 YRS.   2.2 YRS.   2.4 YRS.
  AG 107     0.          0.          0.          0.          0.          0.
0.          0.          0.          0.
```

AG*108	8.326E-10	7.955E-10	7.673E-10	7.402E-10	7.139E-10	6.886E-10
6.642E-10	6.407E-10	6.180E-10	5.961E-10			
AG 108	4.033E-06	7.955E-11	7.673E-11	7.402E-11	7.139E-11	6.886E-11
6.642E-11	6.407E-11	6.180E-11	5.961E-11			
AG*109	1.244E 05	0.	0.	0.	0.	0.
0.	0.	0.	0.			
AG 109	0.	0.	0.	0.	0.	0.
0.	0.	0.	0.			
AG*110	2.406E 01	1.747E 01	1.356E 01	1.053E 01	8.173E 00	6.344E 00
4.924E 00	3.822E 00	2.968E 00	2.304E 00			
AG 110	5.382E 03	3.494E-01	2.712E-01	2.106E-01	1.635E-01	1.269E-01
9.848E-02	7.644E-02	5.936E-02	4.607E-02			
AG*111	2.149E 04	0.	0.	0.	0.	0.
0.	0.	0.	0.			
AG 111	2.084E 04	3.186E-01	4.890E-05	7.586E-09	1.164E-12	1.787E-16
2.743E-20	4.210E-24	6.531E-28	0.			
AG 112	1.142E 04	0.	0.	0.	0.	0.
0.	0.	0.	0.			
AG*113	2.002E 03	0.	0.	0.	0.	0.
0.	0.	0.	0.			
AG 113	1.802E 03	0.	0.	0.	0.	0.
0.	0.	0.	0.			
AG 114	1.898E 03	0.	0.	0.	0.	0.
0.	0.	0.	0.			
AG*115	3.818E 02	0.	0.	0.	0.	0.
0.	0.	0.	0.			
AG 115	1.059E 03	0.	0.	0.	0.	0.
0.	0.	0.	0.			
AG 116	1.036E 03	0.	0.	0.	0.	0.
0.	0.	0.	0.			
AG 117	2.088E 03	0.	0.	0.	0.	0.
0.	0.	0.	0.			
TOTAL	1.938E 05	1.814E 01	1.383E 01	1.074E 01	8.336E 00	6.471E 00
5.023E 00	3.899E 00	3.027E 00	2.350E 00			

CONCENTRATION AFTER SHUTDOWN - GRAM ATOMS

AG 107	1.087E-10	2.624E-10	3.842E-10	5.057E-10	6.275E-10	7.492E-10
8.709E-10	9.927E-10	1.114E-09	1.236E-09			
AG*108	1.164E-14	1.112E-14	1.072E-14	1.034E-14	9.977E-15	9.623E-15
9.282E-15	8.953E-15	8.636E-15	8.330E-15			
AG 108	5.147E-17	1.015E-21	9.795E-22	9.448E-22	9.113E-22	8.790E-22
8.479E-22	8.178E-22	7.888E-22	7.609E-22			
AG*109	4.409E-07	0.	0.	0.	0.	0.
0.	0.	0.	0.			
AG 109	5.646E-02	5.700E-02	5.700E-02	5.700E-02	5.700E-02	5.700E-02
5.700E-02	5.700E-02	5.700E-02	5.700E-02			
AG*110	4.790E-05	3.478E-05	2.700E-05	2.096E-05	1.627E-05	1.263E-05
9.803E-06	7.610E-06	5.909E-06	4.586E-06			
AG 110	1.145E-08	7.432E-13	5.769E-13	4.479E-13	3.477E-13	2.699E-13
2.095E-13	1.626E-13	1.263E-13	9.801E-14			
AG*111	1.409E-07	0.	0.	0.	0.	0.
0.	0.	0.	0.			
AG 111	1.197E-03	1.830E-08	2.808E-12	4.356E-16	6.686E-20	1.026E-23
1.575E-27	2.418E-31	3.750E-35	0.			
AG 112	1.166E-05	0.	0.	0.	0.	0.
0.	0.	0.	0.			
AG*113	1.277E-08	0.	0.	0.	0.	0.
0.	0.	0.	0.			
AG 113	3.046E-06	0.	0.	0.	0.	0.
0.	0.	0.	0.			

```
  AG 114     8.411E-10  0.          0.          0.          0.          0.
0.          0.          0.          0.
  AG*115     6.768E-10  0.          0.          0.          0.          0.
0.          0.          0.          0.
  AG 115     1.183E-07  0.          0.          0.          0.          0.
0.          0.          0.          0.
  AG 116     1.377E-08  0.          0.          0.          0.          0.
0.          0.          0.          0.
  AG 117     1.221E-08  0.          0.          0.          0.          0.
0.          0.          0.          0.
  TOTAL      5.772E-02  5.703E-02  5.703E-02  5.702E-02  5.701E-02  5.701E-02
5.701E-02  5.701E-02  5.700E-02  5.700E-02


 ORR   FUEL SOURCE, 22.5 MW 156  DAY  ACTIVITY AFTER SHUTDOWN - CURIES
3510.0 MWD IN  156.0 DAYS.
-
-
AT. NO. 48 CD

 ISOTOPE
-              SHUTDOWN 120.0 DAYS 215.0 DAYS 310.0 DAYS   1.1 YRS.   1.4 YRS.
1.6 YRS.   1.9 YRS.   2.2 YRS.   2.4 YRS.
  CD 108     0.          0.          0.          0.          0.          0.
0.          0.          0.          0.
  CD 110     0.          0.          0.          0.          0.          0.
0.          0.          0.          0.
  CD*111     1.723E-01  0.          0.          0.          0.          0.
0.          0.          0.          0.
  CD 111     0.          0.          0.          0.          0.          0.
0.          0.          0.          0.
  CD 112     0.          0.          0.          0.          0.          0.
0.          0.          0.          0.
  CD*113     1.558E-03  1.533E-03  1.513E-03  1.494E-03  1.475E-03  1.456E-03
1.437E-03  1.419E-03  1.401E-03  1.383E-03
  CD 113     0.          0.          0.          0.          0.          0.
0.          0.          0.          0.
  CD 114     0.          0.          0.          0.          0.          0.
0.          0.          0.          0.
  CD*115     9.675E 01  1.398E 01  3.022E 00  6.546E-01  1.415E-01  3.058E-02
6.611E-03  1.429E-03  3.095E-04  6.690E-05
  CD 115     1.358E 03  2.667E-13  9.756E-26  0.          0.          0.
0.          0.          0.          0.
  CD 116     0.          0.          0.          0.          0.          0.
0.          0.          0.          0.
  CD*117     1.044E 03  0.          0.          0.          0.          0.
0.          0.          0.          0.
  CD 117     1.046E 03  0.          0.          0.          0.          0.
0.          0.          0.          0.
  CD 118     1.122E 03  0.          0.          0.          0.          0.
0.          0.          0.          0.
  CD*119     1.381E 03  0.          0.          0.          0.          0.
0.          0.          0.          0.
  CD 119     1.381E 01  0.          0.          0.          0.          0.
0.          0.          0.          0.
  CD 121     2.415E 02  0.          0.          0.          0.          0.
0.          0.          0.          0.
  TOTAL      6.302E 03  1.398E 01  3.024E 00  6.560E-01  1.430E-01  3.204E-02
8.048E-03  2.848E-03  1.710E-03  1.450E-03

CONCENTRATION AFTER SHUTDOWN - GRAM ATOMS
```

CD 108	1.167E-12	1.168E-12	1.168E-12	1.168E-12	1.169E-12	1.169E-12	1.169E-12	1.170E-12	1.170E-12	1.170E-12
CD 110	1.613E-03	1.627E-03	1.634E-03	1.640E-03	1.645E-03	1.649E-03	1.652E-03	1.654E-03	1.655E-03	1.657E-03
CD*111	4.491E-11	0.	0.	0.	0.	0.	0.	0.	0.	0.
CD 111	1.008E-02	1.128E-02	1.128E-02	1.128E-02	1.128E-02	1.128E-02	1.128E-02	1.128E-02	1.128E-02	1.128E-02
CD 112	5.922E-03	6.010E-03	6.010E-03	6.010E-03	6.010E-03	6.010E-03	6.010E-03	6.010E-03	6.010E-03	6.010E-03
CD*113	6.097E-08	5.998E-08	5.921E-08	5.846E-08	5.771E-08	5.697E-08	5.624E-08	5.552E-08	5.481E-08	5.411E-08
CD 113	9.362E-05	9.669E-05	9.669E-05	9.669E-05	9.669E-05	9.669E-05	9.669E-05	9.669E-05	9.669E-05	9.669E-05
CD 114	3.163E-03	3.163E-03	3.163E-03	3.163E-03	3.163E-03	3.163E-03	3.163E-03	3.163E-03	3.163E-03	3.163E-03
CD*115	3.186E-05	4.604E-06	9.952E-07	2.155E-07	4.659E-08	1.007E-08	2.177E-09	4.705E-10	1.019E-10	2.203E-11
CD 115	2.391E-05	4.697E-21	1.718E-33	0.	0.	0.	0.	0.	0.	0.
CD 116	1.178E-03	1.178E-03	1.178E-03	1.178E-03	1.178E-03	1.178E-03	1.178E-03	1.178E-03	1.178E-03	1.178E-03
CD*117	1.135E-06	0.	0.	0.	0.	0.	0.	0.	0.	0.
CD 117	8.007E-07	0.	0.	0.	0.	0.	0.	0.	0.	0.
CD 118	2.983E-07	0.	0.	0.	0.	0.	0.	0.	0.	0.
CD*119	1.982E-08	0.	0.	0.	0.	0.	0.	0.	0.	0.
CD 119	7.337E-10	0.	0.	0.	0.	0.	0.	0.	0.	0.
CD 121	4.495E-09	0.	0.	0.	0.	0.	0.	0.	0.	0.
TOTAL	2.210E-02	2.336E-02	2.336E-02	2.337E-02	2.337E-02	2.337E-02	2.338E-02	2.338E-02	2.338E-02	2.338E-02

ORR FUEL SOURCE, 22.5 MW 156 DAY ACTIVITY AFTER SHUTDOWN - CURIES
3510.0 MWD IN 156.0 DAYS.

AT. NO. 49 IN

ISOTOPE	SHUTDOWN	120.0 DAYS	215.0 DAYS	310.0 DAYS	1.1 YRS.	1.4 YRS.	1.6 YRS.	1.9 YRS.	2.2 YRS.	2.4 YRS.
IN 113	0.	0.	0.	0.	0.	0.	0.	0.	0.	0.
IN*114	1.063E-06	2.014E-07	5.394E-08	1.447E-08	3.876E-09	1.038E-09	2.781E-10	7.450E-11	1.999E-11	5.354E-12
IN 114	2.606E-06	2.014E-07	5.394E-08	1.447E-08	3.876E-09	1.038E-09	2.781E-10	7.450E-11	1.999E-11	5.354E-12
IN*115	1.358E 03	2.898E-13	1.060E-25	0.	0.	0.	0.	0.	0.	0.
IN 115	0.	0.	0.	0.	0.	0.	0.	0.	0.	0.
IN*116	1.971E 02	0.	0.	0.	0.	0.	0.	0.	0.	0.
IN 116	5.559E 01	0.	0.	0.	0.	0.	0.	0.	0.	0.

```
  IN*117    1.046E 03  0.         0.         0.         0.         0.
0.         0.         0.         0.
  IN 117    1.253E 03  0.         0.         0.         0.         0.
0.         0.         0.         0.
  IN 118    1.122E 03  0.         0.         0.         0.         0.
0.         0.         0.         0.
  IN*119    1.381E 01  0.         0.         0.         0.         0.
0.         0.         0.         0.
  IN 119    1.367E 03  0.         0.         0.         0.         0.
0.         0.         0.         0.
  IN 120    5.610E 02  0.         0.         0.         0.         0.
0.         0.         0.         0.
  IN*121    2.415E 02  0.         0.         0.         0.         0.
0.         0.         0.         0.
  IN 121    7.503E 02  0.         0.         0.         0.         0.
0.         0.         0.         0.
  IN 122    7.164E 02  0.         0.         0.         0.         0.
0.         0.         0.         0.
  IN 123    1.053E 02  0.         0.         0.         0.         0.
0.         0.         0.         0.
  TOTAL     8.788E 03  4.028E-07  1.079E-07  2.894E-08  7.753E-09  2.077E-09
5.563E-10  1.490E-10  3.998E-11  1.071E-11

CONCENTRATION AFTER SHUTDOWN - GRAM ATOMS
  IN 113    3.638E-10  1.347E-09  2.115E-09  2.871E-09  3.619E-09  4.358E-09
5.086E-09  5.806E-09  6.515E-09  7.217E-09
  IN*114    4.071E-13  7.710E-14  2.065E-14  5.541E-15  1.484E-15  3.975E-16
1.065E-16  2.852E-17  7.653E-18  2.050E-18
  IN 114    1.663E-17  1.285E-18  3.442E-19  9.234E-20  2.474E-20  6.626E-21
1.775E-21  4.754E-22  1.275E-22  3.416E-23
  IN*115    1.906E-06  4.068E-22  1.488E-34  0.         0.         0.
0.         0.         0.         0.
  IN 115    1.162E-03  1.214E-03  1.218E-03  1.218E-03  1.219E-03  1.219E-03
1.219E-03  1.219E-03  1.219E-03  1.219E-03
  IN*116    5.658E-08  0.         0.         0.         0.         0.
0.         0.         0.         0.
  IN 116    6.896E-11  0.         0.         0.         0.         0.
0.         0.         0.         0.
  IN*117    6.339E-07  0.         0.         0.         0.         0.
0.         0.         0.         0.
  IN 117    2.999E-07  0.         0.         0.         0.         0.
0.         0.         0.         0.
  IN 118    5.072E-10  0.         0.         0.         0.         0.
0.         0.         0.         0.
  IN*119    1.322E-09  0.         0.         0.         0.         0.
0.         0.         0.         0.
  IN 119    1.454E-08  0.         0.         0.         0.         0.
0.         0.         0.         0.
  IN 120    2.486E-09  0.         0.         0.         0.         0.
0.         0.         0.         0.
  IN*121    3.981E-09  0.         0.         0.         0.         0.
0.         0.         0.         0.
  IN 121    1.995E-09  0.         0.         0.         0.         0.
0.         0.         0.         0.
  IN 122    4.762E-10  0.         0.         0.         0.         0.
0.         0.         0.         0.
  IN 123    9.326E-11  0.         0.         0.         0.         0.
0.         0.         0.         0.
  TOTAL     1.165E-03  1.214E-03  1.218E-03  1.218E-03  1.219E-03  1.219E-03
1.219E-03  1.219E-03  1.219E-03  1.219E-03
```

ORR FUEL SOURCE, 22.5 MW 156 DAY ACTIVITY AFTER SHUTDOWN - CURIES
3510.0 MWD IN 156.0 DAYS.

AT. NO. 50 SN

ISOTOPE	SHUTDOWN	120.0 DAYS	215.0 DAYS	310.0 DAYS	1.1 YRS.	1.4 YRS.	1.6 YRS.	1.9 YRS.	2.2 YRS.	2.4 YRS.
SN 115	0.	0.	0.	0.	0.	0.	0.	0.	0.	0.
SN 116	0.	0.	0.	0.	0.	0.	0.	0.	0.	0.
SN*117	2.592E-03	6.806E-06	6.162E-08	5.611E-10	5.080E-12	4.599E-14	4.164E-16	3.770E-18	3.432E-20	3.108E-22
SN 117	0.	0.	0.	0.	0.	0.	0.	0.	0.	0.
SN 118	0.	0.	0.	0.	0.	0.	0.	0.	0.	0.
SN*119	5.547E 01	3.977E 01	3.056E 01	2.349E 01	1.805E 01	1.387E 01	1.066E 01	8.188E 00	6.294E 00	4.836E 00
SN 119	0.	0.	0.	0.	0.	0.	0.	0.	0.	0.
SN 120	0.	0.	0.	0.	0.	0.	0.	0.	0.	0.
SN*121	3.637E 00	3.604E 00	3.578E 00	3.553E 00	3.527E 00	3.502E 00	3.477E 00	3.452E 00	3.427E 00	3.402E 00
SN 121	5.012E 03	3.841E-29	0.	0.	0.	0.	0.	0.	0.	0.
SN 122	0.	0.	0.	0.	0.	0.	0.	0.	0.	0.
SN*123	6.284E 01	3.230E 01	1.907E 01	1.127E 01	6.652E 00	3.928E 00	2.319E 00	1.369E 00	8.089E-01	4.776E-01
SN 123	1.556E 03	0.	0.	0.	0.	0.	0.	0.	0.	0.
SN 124	0.	0.	0.	0.	0.	0.	0.	0.	0.	0.
SN*125	1.226E 03	0.	0.	0.	0.	0.	0.	0.	0.	0.
SN 125	7.026E 03	1.007E 00	9.121E-04	8.331E-07	7.545E-10	6.833E-13	6.189E-16	5.605E-19	5.120E-22	4.637E-25
SN 126	7.028E-02	7.028E-02	7.028E-02	7.028E-02	7.028E-02	7.028E-02	7.028E-02	7.028E-02	7.028E-02	7.028E-02
SN 127	5.848E 04	0.	0.	0.	0.	0.	0.	0.	0.	0.
SN 128	7.282E 04	0.	0.	0.	0.	0.	0.	0.	0.	0.
SN 130	3.796E 05	0.	0.	0.	0.	0.	0.	0.	0.	0.
TOTAL	5.259E 05	7.675E 01	5.328E 01	3.838E 01	2.830E 01	2.137E 01	1.652E 01	1.308E 01	1.060E 01	8.786E 00

CONCENTRATION AFTER SHUTDOWN - GRAM ATOMS

SN 115	7.051E-05	7.193E-05	7.193E-05	7.193E-05	7.193E-05	7.193E-05	7.193E-05	7.193E-05	7.193E-05	7.193E-05
SN 116	4.635E-04	4.636E-04	4.636E-04	4.636E-04	4.636E-04	4.636E-04	4.636E-04	4.636E-04	4.636E-04	4.636E-04
SN*117	2.779E-10	7.296E-13	6.606E-15	6.015E-17	5.446E-19	4.930E-21	4.464E-23	4.041E-25	3.680E-27	3.331E-29

```
  SN 117     1.727E-03  1.730E-03  1.730E-03  1.730E-03  1.730E-03  1.730E-03
1.730E-03  1.730E-03  1.730E-03  1.730E-03
  SN 118     1.218E-03  1.218E-03  1.218E-03  1.218E-03  1.218E-03  1.218E-03
1.218E-03  1.218E-03  1.218E-03  1.218E-03
  SN*119     1.062E-04  7.613E-05  5.850E-05  4.497E-05  3.455E-05  2.655E-05
2.040E-05  1.567E-05  1.205E-05  9.258E-06
  SN 119     1.230E-03  1.260E-03  1.277E-03  1.291E-03  1.301E-03  1.309E-03
1.316E-03  1.320E-03  1.324E-03  1.327E-03
  SN 120     1.218E-03  1.218E-03  1.218E-03  1.218E-03  1.218E-03  1.218E-03
1.218E-03  1.218E-03  1.218E-03  1.218E-03
  SN*121     2.542E-04  2.518E-04  2.500E-04  2.482E-04  2.465E-04  2.447E-04
2.429E-04  2.412E-04  2.394E-04  2.377E-04
  SN 121     4.318E-05  3.309E-37  0.         0.         0.         0.
0.         0.         0.         0.
  SN 122     1.572E-03  1.572E-03  1.572E-03  1.572E-03  1.572E-03  1.572E-03
1.572E-03  1.572E-03  1.572E-03  1.572E-03
  SN*123     6.015E-05  3.092E-05  1.825E-05  1.078E-05  6.367E-06  3.759E-06
2.220E-06  1.311E-06  7.743E-07  4.571E-07
  SN 123     3.310E-07  0.         0.         0.         0.         0.
0.         0.         0.         0.
  SN 124     2.357E-03  2.357E-03  2.357E-03  2.357E-03  2.357E-03  2.357E-03
2.357E-03  2.357E-03  2.357E-03  2.357E-03
  SN*125     6.323E-08  0.         0.         0.         0.         0.
0.         0.         0.         0.
  SN 125     5.057E-04  7.249E-08  6.565E-11  5.996E-14  5.431E-17  4.918E-20
4.454E-23  4.034E-26  3.685E-29  3.337E-32
  SN 126     1.964E-02  1.964E-02  1.964E-02  1.964E-02  1.964E-02  1.964E-02
1.964E-02  1.964E-02  1.964E-02  1.964E-02
  SN 127     3.918E-05  0.         0.         0.         0.         0.
0.         0.         0.         0.
  SN 128     2.401E-05  0.         0.         0.         0.         0.
0.         0.         0.         0.
  SN 130     5.250E-06  0.         0.         0.         0.         0.
0.         0.         0.         0.
  TOTAL      3.054E-02  2.989E-02  2.988E-02  2.987E-02  2.986E-02  2.986E-02
2.986E-02  2.985E-02  2.985E-02  2.985E-02


 ORR   FUEL SOURCE, 22.5 MW 156  DAY  ACTIVITY AFTER SHUTDOWN - CURIES
3510.0 MWD IN  156.0 DAYS.
-
-
AT. NO. 51 SB

 ISOTOPE
-              SHUTDOWN 120.0 DAYS 215.0 DAYS 310.0 DAYS   1.1 YRS.   1.4 YRS.
1.6 YRS.   1.9 YRS.   2.2 YRS.   2.4 YRS.
  SB 121     0.         0.         0.         0.         0.         0.
0.         0.         0.         0.
  SB*122     2.143E-01  0.         0.         0.         0.         0.
0.         0.         0.         0.
  SB 122     2.075E 01  1.509E-12  5.986E-23  2.444E-33  0.         0.
0.         0.         0.         0.
  SB 123     0.         0.         0.         0.         0.         0.
0.         0.         0.         0.
  SB*124     8.550E-02  0.         0.         0.         0.         0.
0.         0.         0.         0.
  SB 124     2.400E 00  6.025E-01  2.018E-01  6.765E-02  2.265E-02  7.584E-03
2.540E-03  8.504E-04  2.851E-04  9.547E-05
  SB 125     6.321E 02  6.431E 02  6.015E 02  5.627E 02  5.263E 02  4.923E 02
4.604E 02  4.307E 02  4.029E 02  3.768E 02
```

```
  SB*126     7.027E-02  7.028E-02  7.028E-02  7.028E-02  7.028E-02  7.028E-02
7.028E-02  7.028E-02  7.028E-02  7.028E-02
  SB 126     8.744E 01  1.820E-01  7.016E-02  6.958E-02  6.958E-02  6.958E-02
6.958E-02  6.958E-02  6.958E-02  6.958E-02
  SB 127     6.003E 04  3.341E-05  1.546E-12  7.308E-20  3.383E-27  0.
0.         0.         0.         0.
  SB*128     7.375E 03  0.         0.         0.         0.         0.
0.         0.         0.         0.
  SB 128     8.754E 04  0.         0.         0.         0.         0.
0.         0.         0.         0.
  SB 129     1.898E 05  0.         0.         0.         0.         0.
0.         0.         0.         0.
  SB 130     3.796E 05  0.         0.         0.         0.         0.
0.         0.         0.         0.
  SB 131     5.470E 05  0.         0.         0.         0.         0.
0.         0.         0.         0.
  SB 132     7.919E 05  0.         0.         0.         0.         0.
0.         0.         0.         0.
  SB 133     6.523E 05  0.         0.         0.         0.         0.
0.         0.         0.         0.
  SB 134     6.125E 05  0.         0.         0.         0.         0.
0.         0.         0.         0.
  SB 135     5.402E 05  0.         0.         0.         0.         0.
0.         0.         0.         0.
  TOTAL      3.869E 06  6.439E 02  6.019E 02  5.629E 02  5.265E 02  4.924E 02
4.606E 02  4.308E 02  4.030E 02  3.770E 02

CONCENTRATION AFTER SHUTDOWN - GRAM ATOMS
  SB 121     3.301E-03  3.347E-03  3.349E-03  3.350E-03  3.352E-03  3.354E-03
3.356E-03  3.357E-03  3.359E-03  3.361E-03
  SB*122     4.671E-12  0.         0.         0.         0.         0.
0.         0.         0.         0.
  SB 122     4.370E-07  3.178E-20  1.261E-30  0.         0.         0.
0.         0.         0.         0.
  SB 123     1.768E-03  1.797E-03  1.810E-03  1.818E-03  1.822E-03  1.825E-03
1.826E-03  1.827E-03  1.828E-03  1.828E-03
  SB*124     9.545E-12  0.         0.         0.         0.         0.
0.         0.         0.         0.
  SB 124     1.106E-06  2.777E-07  9.300E-08  3.118E-08  1.044E-08  3.496E-09
1.171E-09  3.920E-10  1.314E-10  4.401E-11
  SB 125     4.770E-03  4.853E-03  4.539E-03  4.246E-03  3.972E-03  3.715E-03
3.475E-03  3.250E-03  3.040E-03  2.844E-03
  SB*126     7.098E-12  7.099E-12  7.099E-12  7.099E-12  7.099E-12  7.099E-12
7.099E-12  7.099E-12  7.099E-12  7.099E-12
  SB 126     8.369E-06  1.742E-08  6.716E-09  6.660E-09  6.660E-09  6.660E-09
6.660E-09  6.660E-09  6.660E-09  6.660E-09
  SB 127     1.793E-03  9.977E-13  4.618E-20  2.182E-27  1.010E-34  0.
0.         0.         0.         0.
  SB*128     2.259E-05  0.         0.         0.         0.         0.
0.         0.         0.         0.
  SB 128     4.655E-06  0.         0.         0.         0.         0.
0.         0.         0.         0.
  SB 129     2.605E-04  0.         0.         0.         0.         0.
0.         0.         0.         0.
  SB 130     6.663E-05  0.         0.         0.         0.         0.
0.         0.         0.         0.
  SB 131     6.689E-05  0.         0.         0.         0.         0.
0.         0.         0.         0.
  SB 132     8.842E-06  0.         0.         0.         0.         0.
0.         0.         0.         0.
```

```
  SB 133     1.422E-05  0.          0.          0.          0.          0.
0.          0.          0.          0.
  SB 134     2.606E-06  0.          0.          0.          0.          0.
0.          0.          0.          0.
  SB 135     9.556E-07  0.          0.          0.          0.          0.
0.          0.          0.          0.
  TOTAL      1.209E-02  9.997E-03  9.698E-03  9.414E-03  9.146E-03  8.893E-03
8.657E-03  8.435E-03  8.227E-03  8.032E-03


 ORR   FUEL SOURCE, 22.5 MW 156  DAY  ACTIVITY AFTER SHUTDOWN - CURIES
3510.0 MWD IN  156.0 DAYS.
-
-
AT. NO. 52 TE

 ISOTOPE
-              SHUTDOWN 120.0 DAYS 215.0 DAYS 310.0 DAYS   1.1 YRS.   1.4 YRS.
1.6 YRS.   1.9 YRS.   2.2 YRS.   2.4 YRS.
  TE 122     0.          0.          0.          0.          0.          0.
0.          0.          0.          0.
  TE*123     2.052E-03  9.221E-04  4.895E-04  2.600E-04  1.380E-04  7.327E-05
3.889E-05  2.065E-05  1.097E-05  5.822E-06
  TE 123     0.          0.          0.          0.          0.          0.
0.          0.          0.          0.
  TE 124     0.          0.          0.          0.          0.          0.
0.          0.          0.          0.
  TE*125     8.177E 01  1.503E 02  1.574E 02  1.526E 02  1.445E 02  1.357E 02
1.271E 02  1.189E 02  1.113E 02  1.041E 02
  TE 125     0.          0.          0.          0.          0.          0.
0.          0.          0.          0.
  TE 126     0.          0.          0.          0.          0.          0.
0.          0.          0.          0.
  TE*127     7.095E 03  3.427E 03  1.830E 03  9.781E 02  5.224E 02  2.790E 02
1.490E 02  7.956E 01  4.252E 01  2.271E 01
  TE 127     5.497E 04  3.388E 03  1.809E 03  9.670E 02  5.164E 02  2.758E 02
1.473E 02  7.866E 01  4.204E 01  2.245E 01
  TE 128     0.          0.          0.          0.          0.          0.
0.          0.          0.          0.
  TE*129     6.575E 04  5.315E 03  7.223E 02  9.839E 01  1.337E 01  1.817E 00
2.469E-01  3.355E-02  4.571E-03  6.212E-04
  TE 129     1.872E 05  5.323E 03  7.233E 02  9.853E 01  1.339E 01  1.820E 00
2.473E-01  3.360E-02  4.577E-03  6.220E-04
  TE 130     0.          0.          0.          0.          0.          0.
0.          0.          0.          0.
  TE*131     9.730E 04  7.666E-26  0.          0.          0.          0.
0.          0.          0.          0.
  TE 131     5.492E 05  1.688E-26  0.          0.          0.          0.
0.          0.          0.          0.
  TE 132     9.094E 05  6.949E-06  1.098E-14  1.778E-23  0.          0.
0.          0.          0.          0.
  TE*133     6.698E 05  0.          0.          0.          0.          0.
0.          0.          0.          0.
  TE 133     4.699E 05  0.          0.          0.          0.          0.
0.          0.          0.          0.
  TE 134     1.341E 06  0.          0.          0.          0.          0.
0.          0.          0.          0.
  TE 135     5.402E 05  0.          0.          0.          0.          0.
0.          0.          0.          0.
  TOTAL      4.892E 06  1.760E 04  5.243E 03  2.295E 03  1.210E 03  6.941E 02
4.239E 02  2.772E 02  1.959E 02  1.493E 02
```

CONCENTRATION AFTER SHUTDOWN - GRAM ATOMS

TE 122	7.561E-06	7.998E-06	7.998E-06	7.998E-06	7.998E-06	7.998E-06	7.998E-06	7.998E-06	7.998E-06	7.998E-06
TE*123	1.634E-09	7.343E-10	3.898E-10	2.071E-10	1.099E-10	5.835E-11	3.097E-11	1.644E-11	8.735E-12	4.637E-12
TE 123	4.170E-09	5.070E-09	5.414E-09	5.597E-09	5.694E-09	5.746E-09	5.773E-09	5.788E-09	5.795E-09	5.800E-09
TE 124	8.985E-07	1.727E-06	1.912E-06	1.974E-06	1.994E-06	2.001E-06	2.004E-06	2.004E-06	2.005E-06	2.005E-06
TE*125	3.632E-05	6.674E-05	6.990E-05	6.778E-05	6.417E-05	6.027E-05	5.645E-05	5.283E-05	4.943E-05	4.623E-05
TE 125	1.916E-04	5.838E-04	8.944E-04	1.190E-03	1.468E-03	1.728E-03	1.972E-03	2.201E-03	2.414E-03	2.614E-03
TE 126	2.859E-05	3.698E-05	3.703E-05	3.706E-05	3.710E-05	3.713E-05	3.717E-05	3.721E-05	3.724E-05	3.728E-05
TE*127	5.705E-03	2.755E-03	1.471E-03	7.864E-04	4.200E-04	2.243E-04	1.198E-04	6.397E-05	3.419E-05	1.826E-05
TE 127	1.631E-04	1.005E-05	5.369E-06	2.869E-06	1.532E-06	8.183E-07	4.370E-07	2.334E-07	1.247E-07	6.662E-08
TE 128	7.852E-02	7.857E-02	7.857E-02	7.857E-02	7.857E-02	7.857E-02	7.857E-02	7.857E-02	7.857E-02	7.857E-02
TE*129	1.662E-02	1.343E-03	1.825E-04	2.486E-05	3.379E-06	4.591E-07	6.239E-08	8.479E-09	1.155E-09	1.570E-10
TE 129	6.671E-05	1.896E-06	2.577E-07	3.511E-08	4.771E-09	6.483E-10	8.810E-11	1.197E-11	1.631E-12	2.216E-13
TE 130	3.142E-01	3.143E-01	3.143E-01	3.143E-01	3.143E-01	3.143E-01	3.143E-01	3.143E-01	3.143E-01	3.143E-01
TE*131	8.941E-04	7.044E-34	0.	0.	0.	0.	0.	0.	0.	0.
TE 131	7.301E-05	2.244E-36	0.	0.	0.	0.	0.	0.	0.	0.
TE 132	2.263E-02	1.729E-13	2.732E-22	4.424E-31	0.	0.	0.	0.	0.	0.
TE*133	1.781E-04	0.	0.	0.	0.	0.	0.	0.	0.	0.
TE 133	3.123E-05	0.	0.	0.	0.	0.	0.	0.	0.	0.
TE 134	2.995E-04	0.	0.	0.	0.	0.	0.	0.	0.	0.
TE 135	4.799E-07	0.	0.	0.	0.	0.	0.	0.	0.	0.
TOTAL	4.397E-01	3.977E-01	3.955E-01	3.950E-01	3.949E-01	3.949E-01	3.951E-01	3.952E-01	3.954E-01	3.956E-01

ORR FUEL SOURCE, 22.5 MW 156 DAY ACTIVITY AFTER SHUTDOWN - CURIES
3510.0 MWD IN 156.0 DAYS.

AT. NO. 53 I

ISOTOPE	SHUTDOWN	120.0 DAYS	215.0 DAYS	310.0 DAYS	1.1 YRS.	1.4 YRS.	1.6 YRS.	1.9 YRS.	2.2 YRS.	2.4 YRS.
I 127	0.	0.	0.	0.	0.	0.	0.	0.	0.	0.
I 128	2.766E 02	0.	0.	0.	0.	0.	0.	0.	0.	0.
I 129	3.099E-03	3.448E-03	3.474E-03	3.478E-03	3.478E-03	3.478E-03	3.478E-03	3.478E-03	3.478E-03	3.478E-03

```
  I  130    4.633E 03  0.         0.         0.         0.         0.
0.         0.         0.         0.
  I  131    6.428E 05  2.152E 01  6.017E-03  1.700E-06  4.754E-10  1.329E-13
3.718E-17  1.040E-20  2.937E-24  8.214E-28
  I  132    9.093E 05  7.160E-06  1.131E-14  1.832E-23  0.         0.
0.         0.         0.         0.
  I  133    1.122E 06  0.         0.         0.         0.         0.
0.         0.         0.         0.
  I  134    1.434E 06  0.         0.         0.         0.         0.
0.         0.         0.         0.
  I  135    1.228E 06  0.         0.         0.         0.         0.
0.         0.         0.         0.
  I  136    5.022E 05  0.         0.         0.         0.         0.
0.         0.         0.         0.
  I  137    9.473E 05  0.         0.         0.         0.         0.
0.         0.         0.         0.
  I  138    6.712E 05  0.         0.         0.         0.         0.
0.         0.         0.         0.
  I  139    3.330E 05  0.         0.         0.         0.         0.
0.         0.         0.         0.
  TOTAL     7.796E 06  2.152E 01  9.491E-03  3.479E-03  3.478E-03  3.478E-03
3.478E-03  3.478E-03  3.478E-03  3.478E-03

CONCENTRATION AFTER SHUTDOWN - GRAM ATOMS
  I  127    3.739E-02  4.232E-02  4.361E-02  4.430E-02  4.466E-02  4.486E-02
4.497E-02  4.502E-02  4.505E-02  4.507E-02
  I  128    3.677E-08  0.         0.         0.         0.         0.
0.         0.         0.         0.
  I  129    1.386E-01  1.542E-01  1.554E-01  1.555E-01  1.555E-01  1.555E-01
1.555E-01  1.555E-01  1.555E-01  1.555E-01
  I  130    1.848E-05  0.         0.         0.         0.         0.
0.         0.         0.         0.
  I  131    3.962E-02  1.326E-06  3.709E-10  1.048E-13  2.930E-17  8.195E-21
2.292E-24  6.409E-28  1.810E-31  5.063E-35
  I  132    6.673E-04  5.254E-15  8.301E-24  1.344E-32  0.         0.
0.         0.         0.         0.
  I  133    7.520E-03  0.         0.         0.         0.         0.
0.         0.         0.         0.
  I  134    4.042E-04  0.         0.         0.         0.         0.
0.         0.         0.         0.
  I  135    2.626E-03  0.         0.         0.         0.         0.
0.         0.         0.         0.
  I  136    3.694E-06  0.         0.         0.         0.         0.
0.         0.         0.         0.
  I  137    2.015E-06  0.         0.         0.         0.         0.
0.         0.         0.         0.
  I  138    3.516E-07  0.         0.         0.         0.         0.
0.         0.         0.         0.
  I  139    5.901E-08  0.         0.         0.         0.         0.
0.         0.         0.         0.
  TOTAL     2.268E-01  1.965E-01  1.990E-01  1.998E-01  2.002E-01  2.004E-01
2.005E-01  2.006E-01  2.006E-01  2.006E-01


 ORR   FUEL SOURCE, 22.5 MW 156  DAY  ACTIVITY AFTER SHUTDOWN - CURIES
3510.0 MWD IN  156.0 DAYS.

AT. NO. 54 XE
```

```
 ISOTOPE
                SHUTDOWN 120.0 DAYS 215.0 DAYS 310.0 DAYS   1.1 YRS.   1.4 YRS.
1.6 YRS.   1.9 YRS.   2.2 YRS.   2.4 YRS.
  XE 128    0.         0.         0.         0.         0.         0.
0.         0.         0.         0.
  XE 129    0.         0.         0.         0.         0.         0.
0.         0.         0.         0.
  XE 130    0.         0.         0.         0.         0.         0.
0.         0.         0.         0.
  XE*131    5.250E 03  1.401E 01  5.911E-02  2.463E-04  1.018E-06  4.208E-09
1.739E-11  7.188E-14  2.991E-16  1.236E-18
  XE 131    0.         0.         0.         0.         0.         0.
0.         0.         0.         0.
  XE 132    0.         0.         0.         0.         0.         0.
0.         0.         0.         0.
  XE*133    2.624E 04  7.906E-12  2.892E-24  0.         0.         0.
0.         0.         0.         0.
  XE 133    1.261E 06  2.112E-01  7.885E-07  2.990E-12  1.116E-17  4.169E-23
1.557E-28  0.         0.         0.
  XE 134    0.         0.         0.         0.         0.         0.
0.         0.         0.         0.
  XE*135    3.381E 05  0.         0.         0.         0.         0.
0.         0.         0.         0.
  XE 135    1.292E 05  0.         0.         0.         0.         0.
0.         0.         0.         0.
  XE 136    0.         0.         0.         0.         0.         0.
0.         0.         0.         0.
  XE 137    1.214E 06  0.         0.         0.         0.         0.
0.         0.         0.         0.
  XE 138    1.079E 06  0.         0.         0.         0.         0.
0.         0.         0.         0.
  XE 139    8.749E 05  0.         0.         0.         0.         0.
0.         0.         0.         0.
  XE 140    6.678E 05  0.         0.         0.         0.         0.
0.         0.         0.         0.
  XE 141    2.813E 05  0.         0.         0.         0.         0.
0.         0.         0.         0.
  XE 142    6.298E 04  0.         0.         0.         0.         0.
0.         0.         0.         0.
  XE 143    5.496E 05  0.         0.         0.         0.         0.
0.         0.         0.         0.
  XE 144    4.383E 05  0.         0.         0.         0.         0.
0.         0.         0.         0.
  TOTAL     6.928E 06  1.423E 01  5.911E-02  2.463E-04  1.018E-06  4.208E-09
1.739E-11  7.188E-14  2.991E-16  1.236E-18

CONCENTRATION AFTER SHUTDOWN - GRAM ATOMS
  XE 128    1.080E-04  1.081E-04  1.081E-04  1.081E-04  1.081E-04  1.081E-04
1.081E-04  1.081E-04  1.081E-04  1.081E-04
  XE 129    1.507E-07  1.528E-07  1.546E-07  1.563E-07  1.581E-07  1.598E-07
1.616E-07  1.633E-07  1.651E-07  1.668E-07
  XE 130    1.870E-03  1.889E-03  1.889E-03  1.889E-03  1.889E-03  1.889E-03
1.889E-03  1.889E-03  1.889E-03  1.889E-03
  XE*131    4.824E-04  1.288E-06  5.431E-09  2.263E-11  9.354E-14  3.866E-16
1.598E-18  6.605E-21  2.748E-23  1.136E-25
  XE 131    4.568E-01  4.980E-01  4.980E-01  4.980E-01  4.980E-01  4.980E-01
4.980E-01  4.980E-01  4.980E-01  4.980E-01
  XE 132    7.172E-01  7.405E-01  7.405E-01  7.405E-01  7.405E-01  7.405E-01
7.405E-01  7.405E-01  7.405E-01  7.405E-01
  XE*133    4.621E-04  1.392E-19  5.094E-32  0.         0.         0.
0.         0.         0.         0.
```

```
  XE 133     5.089E-02  8.521E-09  3.182E-14  1.206E-19  4.505E-25  1.682E-30
6.282E-36  0.          0.          0.
  XE 134     1.195E 00  1.196E 00  1.196E 00  1.196E 00  1.196E 00  1.196E 00
1.196E 00  1.196E 00  1.196E 00  1.196E 00
  XE*135     2.876E-05  0.          0.          0.          0.          0.
0.         0.          0.          0.
  XE 135     3.791E-04  0.          0.          0.          0.          0.
0.         0.          0.          0.
  XE 136     1.969E 00  1.969E 00  1.969E 00  1.969E 00  1.969E 00  1.969E 00
1.969E 00  1.969E 00  1.969E 00  1.969E 00
  XE 137     2.518E-05  0.          0.          0.          0.          0.
0.         0.          0.          0.
  XE 138     9.752E-05  0.          0.          0.          0.          0.
0.         0.          0.          0.
  XE 139     3.179E-06  0.          0.          0.          0.          0.
0.         0.          0.          0.
  XE 140     9.470E-07  0.          0.          0.          0.          0.
0.         0.          0.          0.
  XE 141     4.976E-08  0.          0.          0.          0.          0.
0.         0.          0.          0.
  XE 142     8.373E-09  0.          0.          0.          0.          0.
0.         0.          0.          0.
  XE 143     4.869E-08  0.          0.          0.          0.          0.
0.         0.          0.          0.
  XE 144     3.884E-08  0.          0.          0.          0.          0.
0.         0.          0.          0.
  TOTAL      4.392E 00  4.405E 00  4.405E 00  4.405E 00  4.405E 00  4.405E 00
4.405E 00  4.405E 00  4.405E 00  4.405E 00


 ORR   FUEL SOURCE, 22.5 MW 156  DAY  ACTIVITY AFTER SHUTDOWN - CURIES
3510.0 MWD IN  156.0 DAYS.
AT. NO. 55 CS

 ISOTOPE
              SHUTDOWN 120.0 DAYS 215.0 DAYS 310.0 DAYS   1.1 YRS.   1.4 YRS.
1.6 YRS.   1.9 YRS.   2.2 YRS.   2.4 YRS.
  CS 133     0.          0.          0.          0.          0.          0.
0.         0.          0.          0.
  CS*134     2.670E 03  0.          0.          0.          0.          0.
0.         0.          0.          0.
  CS 134     1.931E 03  1.733E 03  1.590E 03  1.459E 03  1.339E 03  1.229E 03
1.128E 03  1.035E 03  9.497E 02  8.715E 02
  CS 135     1.860E-02  1.915E-02  1.915E-02  1.915E-02  1.915E-02  1.915E-02
1.915E-02  1.915E-02  1.915E-02  1.915E-02
  CS 136     1.020E 04  1.696E 01  1.069E-01  6.782E-04  4.275E-06  2.695E-08
1.699E-10  1.071E-12  6.796E-15  4.285E-17
  CS 137     1.177E 04  1.168E 04  1.161E 04  1.154E 04  1.147E 04  1.140E 04
1.133E 04  1.126E 04  1.120E 04  1.113E 04
  CS 138     1.145E 06  0.          0.          0.          0.          0.
0.         0.          0.          0.
  CS 139     1.105E 06  0.          0.          0.          0.          0.
0.         0.          0.          0.
  CS 140     1.087E 06  0.          0.          0.          0.          0.
0.         0.          0.          0.
  CS 141     9.007E 05  0.          0.          0.          0.          0.
0.         0.          0.          0.
  CS 142     6.264E 05  0.          0.          0.          0.          0.
0.         0.          0.          0.
```

```
  CS 143     1.099E 06  0.          0.          0.          0.          0.
0.          0.          0.          0.
  CS 144     8.767E 05  0.          0.          0.          0.          0.
0.          0.          0.          0.
  TOTAL      6.867E 06  1.343E 04  1.320E 04  1.300E 04  1.281E 04  1.263E 04
1.246E 04  1.230E 04  1.214E 04  1.200E 04

CONCENTRATION AFTER SHUTDOWN - GRAM ATOMS
  CS 133     9.594E-01  1.019E 00  1.019E 00  1.019E 00  1.019E 00  1.019E 00
1.019E 00  1.019E 00  1.019E 00  1.019E 00
  CS*134     2.469E-06  0.          0.          0.          0.          0.
0.          0.          0.          0.
  CS 134     1.133E-02  1.017E-02  9.332E-03  8.565E-03  7.860E-03  7.212E-03
6.619E-03  6.074E-03  5.574E-03  5.115E-03
  CS 135     1.040E-01  1.070E-01  1.070E-01  1.070E-01  1.070E-01  1.070E-01
1.070E-01  1.070E-01  1.070E-01  1.070E-01
  CS 136     1.015E-03  1.688E-06  1.064E-08  6.751E-11  4.256E-13  2.683E-15
1.692E-17  1.066E-19  6.765E-22  4.265E-24
  CS 137     9.865E-01  9.790E-01  9.732E-01  9.673E-01  9.615E-01  9.558E-01
9.500E-01  9.443E-01  9.387E-01  9.331E-01
  CS 138     1.960E-04  0.          0.          0.          0.          0.
0.          0.          0.          0.
  CS 139     5.583E-05  0.          0.          0.          0.          0.
0.          0.          0.          0.
  CS 140     6.359E-06  0.          0.          0.          0.          0.
0.          0.          0.          0.
  CS 141     1.916E-06  0.          0.          0.          0.          0.
0.          0.          0.          0.
  CS 142     1.277E-07  0.          0.          0.          0.          0.
0.          0.          0.          0.
  CS 143     1.948E-07  0.          0.          0.          0.          0.
0.          0.          0.          0.
  CS 144     1.554E-07  0.          0.          0.          0.          0.
0.          0.          0.          0.
  TOTAL      2.063E 00  2.115E 00  2.108E 00  2.101E 00  2.095E 00  2.089E 00
2.082E 00  2.076E 00  2.070E 00  2.064E 00


 ORR   FUEL SOURCE, 22.5 MW 156  DAY  ACTIVITY AFTER SHUTDOWN - CURIES
3510.0 MWD IN  156.0 DAYS.

AT. NO. 56 BA

 ISOTOPE
                SHUTDOWN 120.0 DAYS 215.0 DAYS 310.0 DAYS   1.1 YRS.   1.4 YRS.
1.6 YRS.   1.9 YRS.   2.2 YRS.   2.4 YRS.
  BA 134     0.          0.          0.          0.          0.          0.
0.          0.          0.          0.
  BA*135     8.589E-02  1.059E-31  0.          0.          0.          0.
0.          0.          0.          0.
  BA 135     0.          0.          0.          0.          0.          0.
0.          0.          0.          0.
  BA 136     0.          0.          0.          0.          0.          0.
0.          0.          0.          0.
  BA*137     1.082E 04  1.074E 04  1.068E 04  1.061E 04  1.055E 04  1.049E 04
1.042E 04  1.036E 04  1.030E 04  1.024E 04
  BA 137     0.          0.          0.          0.          0.          0.
0.          0.          0.          0.
  BA 138     0.          0.          0.          0.          0.          0.
0.          0.          0.          0.
```

```
  BA 139    1.128E 06  0.         0.         0.         0.         0.
0.         0.         0.         0.
  BA 140    1.123E 06  1.689E 03  9.838E 00  5.767E-02  3.359E-04  1.956E-06
1.140E-08  6.637E-11  3.890E-13  2.266E-15
  BA 141    1.105E 06  0.         0.         0.         0.         0.
0.         0.         0.         0.
  BA 142    1.012E 06  0.         0.         0.         0.         0.
0.         0.         0.         0.
  BA 143    1.099E 06  0.         0.         0.         0.         0.
0.         0.         0.         0.
  BA 144    8.767E 05  0.         0.         0.         0.         0.
0.         0.         0.         0.
  TOTAL     6.355E 06  1.243E 04  1.069E 04  1.061E 04  1.055E 04  1.049E 04
1.042E 04  1.036E 04  1.030E 04  1.024E 04

CONCENTRATION AFTER SHUTDOWN - GRAM ATOMS
  BA 134    5.250E-04  1.691E-03  2.528E-03  3.296E-03  4.001E-03  4.648E-03
5.242E-03  5.787E-03  6.287E-03  6.746E-03
  BA*135    7.945E-10  0.         0.         0.         0.         0.
0.         0.         0.         0.
  BA 135    4.746E-07  4.876E-07  4.973E-07  5.069E-07  5.166E-07  5.262E-07
5.359E-07  5.455E-07  5.552E-07  5.648E-07
  BA 136    4.502E-03  5.515E-03  5.517E-03  5.517E-03  5.517E-03  5.517E-03
5.517E-03  5.517E-03  5.517E-03  5.517E-03
  BA*137    1.497E-07  1.486E-07  1.477E-07  1.468E-07  1.459E-07  1.450E-07
1.442E-07  1.433E-07  1.424E-07  1.416E-07
  BA 137    4.849E-03  1.232E-02  1.819E-02  2.402E-02  2.982E-02  3.558E-02
4.131E-02  4.701E-02  5.267E-02  5.830E-02
  BA 138    9.312E-01  9.315E-01  9.315E-01  9.315E-01  9.315E-01  9.315E-01
9.315E-01  9.315E-01  9.315E-01  9.315E-01
  BA 139    4.979E-04  0.         0.         0.         0.         0.
0.         0.         0.         0.
  BA 140    1.100E-01  1.656E-04  9.643E-07  5.652E-09  3.292E-11  1.918E-13
1.117E-15  6.506E-18  3.813E-20  2.221E-22
  BA 141    1.058E-04  0.         0.         0.         0.         0.
0.         0.         0.         0.
  BA 142    5.920E-05  0.         0.         0.         0.         0.
0.         0.         0.         0.
  BA 143    1.169E-06  0.         0.         0.         0.         0.
0.         0.         0.         0.
  BA 144    2.331E-07  0.         0.         0.         0.         0.
0.         0.         0.         0.
  TOTAL     1.052E 00  9.511E-01  9.577E-01  9.643E-01  9.708E-01  9.772E-01
9.835E-01  9.898E-01  9.959E-01  1.002E 00


 ORR   FUEL SOURCE, 22.5 MW 156  DAY  ACTIVITY AFTER SHUTDOWN - CURIES
3510.0 MWD IN  156.0 DAYS.
-
-
AT. NO. 57 LA

 ISOTOPE
-              SHUTDOWN 120.0 DAYS 215.0 DAYS 310.0 DAYS   1.1 YRS.   1.4 YRS.
1.6 YRS.   1.9 YRS.   2.2 YRS.   2.4 YRS.
  LA 139    0.         0.         0.         0.         0.         0.
0.         0.         0.         0.
  LA 140    1.149E 06  1.943E 03  1.132E 01  6.635E-02  3.865E-04  2.251E-06
1.311E-08  7.637E-11  4.476E-13  2.607E-15
  LA 141    1.115E 06  0.         0.         0.         0.         0.
0.         0.         0.         0.
```

```
  LA 142    1.043E 06  0.         0.         0.         0.         0.
0.         0.         0.         0.
  LA 143    1.099E 06  0.         0.         0.         0.         0.
0.         0.         0.         0.
  LA 144    8.767E 05  0.         0.         0.         0.         0.
0.         0.         0.         0.
  TOTAL     5.284E 06  1.943E 03  1.132E 01  6.635E-02  3.865E-04  2.251E-06
1.311E-08  7.637E-11  4.476E-13  2.607E-15

CONCENTRATION AFTER SHUTDOWN - GRAM ATOMS
  LA 139    9.338E-01  9.343E-01  9.343E-01  9.343E-01  9.343E-01  9.343E-01
9.343E-01  9.343E-01  9.343E-01  9.343E-01
  LA 140    1.474E-02  2.493E-05  1.452E-07  8.510E-10  4.957E-12  2.887E-14
1.682E-16  9.795E-19  5.741E-21  3.344E-23
  LA 141    1.388E-03  0.         0.         0.         0.         0.
0.         0.         0.         0.
  LA 142    4.659E-04  0.         0.         0.         0.         0.
0.         0.         0.         0.
  LA 143    8.183E-05  0.         0.         0.         0.         0.
0.         0.         0.         0.
  LA 144    3.108E-07  0.         0.         0.         0.         0.
0.         0.         0.         0.
  TOTAL     9.504E-01  9.343E-01  9.343E-01  9.343E-01  9.343E-01  9.343E-01
9.343E-01  9.343E-01  9.343E-01  9.343E-01


 ORR   FUEL SOURCE, 22.5 MW 156  DAY  ACTIVITY AFTER SHUTDOWN - CURIES
3510.0 MWD IN  156.0 DAYS.

AT. NO. 58 CE

 ISOTOPE
              SHUTDOWN 120.0 DAYS 215.0 DAYS 310.0 DAYS   1.1 YRS.   1.4 YRS.
1.6 YRS.   1.9 YRS.   2.2 YRS.   2.4 YRS.
  CE 140    0.         0.         0.         0.         0.         0.
0.         0.         0.         0.
  CE 141    1.074E 06  8.349E 04  1.100E 04  1.453E 03  1.915E 02  2.524E 01
3.327E 00  4.384E-01  5.792E-02  7.632E-03
  CE 142    0.         0.         0.         0.         0.         0.
0.         0.         0.         0.
  CE 143    1.101E 06  5.866E-21  0.         0.         0.         0.
0.         0.         0.         0.
  CE 144    3.289E 05  2.456E 05  1.949E 05  1.548E 05  1.228E 05  9.748E 04
7.737E 04  6.140E 04  4.875E 04  3.869E 04
  CE 145    7.057E 05  0.         0.         0.         0.         0.
0.         0.         0.         0.
  CE 146    5.557E 05  0.         0.         0.         0.         0.
0.         0.         0.         0.
  CE 147    1.148E 05  0.         0.         0.         0.         0.
0.         0.         0.         0.
  CE 148    3.263E 05  0.         0.         0.         0.         0.
0.         0.         0.         0.
  TOTAL     4.206E 06  3.291E 05  2.059E 05  1.562E 05  1.230E 05  9.751E 04
7.737E 04  6.140E 04  4.875E 04  3.869E 04

CONCENTRATION AFTER SHUTDOWN - GRAM ATOMS
  CE 140    8.395E-01  9.641E-01  9.643E-01  9.643E-01  9.643E-01  9.643E-01
9.643E-01  9.643E-01  9.643E-01  9.643E-01
  CE 141    2.672E-01  2.078E-02  2.738E-03  3.617E-04  4.767E-05  6.282E-06
8.279E-07  1.091E-07  1.441E-08  1.899E-09
```

```
  CE 142    8.966E-01  8.972E-01  8.972E-01  8.972E-01  8.972E-01  8.972E-01
8.972E-01  8.972E-01  8.972E-01  8.972E-01
  CE 143    1.159E-02  6.176E-29  0.         0.         0.         0.
0.         0.         0.         0.
  CE 144    7.177E-01  5.360E-01  4.254E-01  3.377E-01  2.680E-01  2.127E-01
1.688E-01  1.340E-01  1.064E-01  8.443E-02
  CE 145    1.126E-05  0.         0.         0.         0.         0.
0.         0.         0.         0.
  CE 146    4.137E-05  0.         0.         0.         0.         0.
0.         0.         0.         0.
  CE 147    7.322E-07  0.         0.         0.         0.         0.
0.         0.         0.         0.
  CE 148    1.215E-06  0.         0.         0.         0.         0.
0.         0.         0.         0.
  TOTAL     2.733E 00  2.418E 00  2.290E 00  2.200E 00  2.130E 00  2.074E 00
2.030E 00  1.995E 00  1.968E 00  1.946E 00


 ORR   FUEL SOURCE, 22.5 MW 156  DAY  ACTIVITY AFTER SHUTDOWN - CURIES
3510.0 MWD IN  156.0 DAYS.

AT. NO. 59 PR

 ISOTOPE
              SHUTDOWN 120.0 DAYS 215.0 DAYS 310.0 DAYS   1.1 YRS.   1.4 YRS.
1.6 YRS.   1.9 YRS.   2.2 YRS.   2.4 YRS.
  PR 141    0.         0.         0.         0.         0.         0.
0.         0.         0.         0.
  PR 142    8.351E 03  0.         0.         0.         0.         0.
0.         0.         0.         0.
  PR 143    1.097E 06  2.814E 03  2.299E 01  1.888E-01  1.542E-03  1.260E-05
1.029E-07  8.402E-10  6.903E-12  5.638E-14
  PR 144    3.519E 05  2.456E 05  1.949E 05  1.548E 05  1.228E 05  9.749E 04
7.737E 04  6.141E 04  4.875E 04  3.869E 04
  PR 145    7.059E 05  0.         0.         0.         0.         0.
0.         0.         0.         0.
  PR 146    5.660E 05  0.         0.         0.         0.         0.
0.         0.         0.         0.
  PR 147    2.295E 05  0.         0.         0.         0.         0.
0.         0.         0.         0.
  PR 148    3.263E 05  0.         0.         0.         0.         0.
0.         0.         0.         0.
  TOTAL     3.285E 06  2.484E 05  1.950E 05  1.548E 05  1.228E 05  9.749E 04
7.737E 04  6.141E 04  4.875E 04  3.869E 04

CONCENTRATION AFTER SHUTDOWN - GRAM ATOMS
  PR 141    6.563E-01  9.043E-01  9.223E-01  9.247E-01  9.250E-01  9.250E-01
9.250E-01  9.250E-01  9.250E-01  9.250E-01
  PR 142    5.116E-05  0.         0.         0.         0.         0.
0.         0.         0.         0.
  PR 143    1.151E-01  2.952E-04  2.411E-06  1.981E-08  1.618E-10  1.321E-12
1.079E-14  8.814E-17  7.241E-19  5.914E-21
  PR 144    3.236E-05  2.259E-05  1.793E-05  1.423E-05  1.130E-05  8.965E-06
7.115E-06  5.647E-06  4.483E-06  3.558E-06
  PR 145    1.329E-03  0.         0.         0.         0.         0.
0.         0.         0.         0.
  PR 146    7.225E-05  0.         0.         0.         0.         0.
0.         0.         0.         0.
  PR 147    1.464E-05  0.         0.         0.         0.         0.
0.         0.         0.         0.
```

```
  PR 148     3.383E-06  0.          0.          0.          0.          0.
0.          0.          0.          0.
  TOTAL      7.729E-01  9.046E-01  9.223E-01  9.247E-01  9.250E-01  9.250E-01
9.251E-01  9.251E-01  9.250E-01  9.250E-01


 ORR   FUEL SOURCE, 22.5 MW 156  DAY  ACTIVITY AFTER SHUTDOWN - CURIES
3510.0 MWD IN  156.0 DAYS.

AT. NO. 60 ND

 ISOTOPE
              SHUTDOWN 120.0 DAYS 215.0 DAYS 310.0 DAYS   1.1 YRS.   1.4 YRS.
1.6 YRS.   1.9 YRS.   2.2 YRS.   2.4 YRS.
  ND 142     0.          0.          0.          0.          0.          0.
0.          0.          0.          0.
  ND 143     0.          0.          0.          0.          0.          0.
0.          0.          0.          0.
  ND 144     0.          0.          0.          0.          0.          0.
0.          0.          0.          0.
  ND 145     0.          0.          0.          0.          0.          0.
0.          0.          0.          0.
  ND 146     0.          0.          0.          0.          0.          0.
0.          0.          0.          0.
  ND 147     4.627E 05  2.573E 02  6.816E-01  1.818E-03  4.816E-06  1.276E-08
3.378E-11  8.948E-14  2.387E-16  6.323E-19
  ND 148     0.          0.          0.          0.          0.          0.
0.          0.          0.          0.
  ND 149     2.496E 05  0.          0.          0.          0.          0.
0.          0.          0.          0.
  ND 150     0.          0.          0.          0.          0.          0.
0.          0.          0.          0.
  ND 151     1.189E 05  0.          0.          0.          0.          0.
0.          0.          0.          0.
  TOTAL      8.312E 05  2.573E 02  6.816E-01  1.818E-03  4.816E-06  1.276E-08
3.378E-11  8.948E-14  2.387E-16  6.323E-19

CONCENTRATION AFTER SHUTDOWN - GRAM ATOMS
  ND 142     2.764E-03  2.815E-03  2.815E-03  2.815E-03  2.815E-03  2.815E-03
2.815E-03  2.815E-03  2.815E-03  2.815E-03
  ND 143     7.085E-01  8.350E-01  8.353E-01  8.353E-01  8.353E-01  8.353E-01
8.353E-01  8.353E-01  8.353E-01  8.353E-01
  ND 144     2.591E-01  4.408E-01  5.514E-01  6.391E-01  7.088E-01  7.641E-01
8.080E-01  8.429E-01  8.705E-01  8.924E-01
  ND 145     6.037E-01  6.051E-01  6.051E-01  6.051E-01  6.051E-01  6.051E-01
6.051E-01  6.051E-01  6.051E-01  6.051E-01
  ND 146     5.043E-01  5.044E-01  5.044E-01  5.044E-01  5.044E-01  5.044E-01
5.044E-01  5.044E-01  5.044E-01  5.044E-01
  ND 147     3.933E-02  2.187E-05  5.793E-08  1.546E-10  4.093E-13  1.084E-15
2.872E-18  7.606E-21  2.029E-23  5.374E-26
  ND 148     2.690E-01  2.691E-01  2.691E-01  2.691E-01  2.691E-01  2.691E-01
2.691E-01  2.691E-01  2.691E-01  2.691E-01
  ND 149     1.434E-04  0.          0.          0.          0.          0.
0.          0.          0.          0.
  ND 150     1.268E-01  1.268E-01  1.268E-01  1.268E-01  1.268E-01  1.268E-01
1.268E-01  1.268E-01  1.268E-01  1.268E-01
  ND 151     7.587E-06  0.          0.          0.          0.          0.
0.          0.          0.          0.
  TOTAL      2.514E 00  2.784E 00  2.895E 00  2.983E 00  3.052E 00  3.108E 00
3.151E 00  3.186E 00  3.214E 00  3.236E 00
```

```
 ORR   FUEL SOURCE, 22.5 MW 156  DAY  ACTIVITY AFTER SHUTDOWN - CURIES
3510.0 MWD IN  156.0 DAYS.

AT. NO. 61 PM

 ISOTOPE
                SHUTDOWN 120.0 DAYS 215.0 DAYS 310.0 DAYS   1.1 YRS.   1.4 YRS.
1.6 YRS.   1.9 YRS.   2.2 YRS.   2.4 YRS.
  PM 147    4.196E 04  4.344E 04  4.055E 04  3.785E 04  3.533E 04  3.298E 04
3.079E 04  2.874E 04  2.683E 04  2.504E 04
  PM*148    3.470E 04  7.073E-03  3.568E-08  1.827E-13  9.218E-19  4.651E-24
2.346E-29  0.         0.         0.
  PM 148    3.157E 03  4.149E 02  8.324E 01  1.673E 01  3.356E 00  6.732E-01
1.350E-01  2.709E-02  5.445E-03  1.092E-03
  PM 149    2.838E 05  1.267E-11  1.406E-24  0.         0.         0.
0.         0.         0.         0.
  PM 151    1.208E 05  3.498E-26  0.         0.         0.         0.
0.         0.         0.         0.
  PM 152    4.227E 04  0.         0.         0.         0.         0.
0.         0.         0.         0.
  PM 153    2.372E 04  0.         0.         0.         0.         0.
0.         0.         0.         0.
  PM 154    1.716E 04  0.         0.         0.         0.         0.
0.         0.         0.         0.
  TOTAL     5.675E 05  4.386E 04  4.063E 04  3.787E 04  3.534E 04  3.298E 04
3.079E 04  2.874E 04  2.683E 04  2.504E 04

CONCENTRATION AFTER SHUTDOWN - GRAM ATOMS
  PM 147    3.071E-01  3.180E-01  2.968E-01  2.771E-01  2.587E-01  2.414E-01
2.254E-01  2.104E-01  1.964E-01  1.833E-01
  PM*148    1.435E-03  2.925E-10  1.476E-15  7.555E-21  3.812E-26  1.923E-31
9.702E-37  0.         0.         0.
  PM 148    9.910E-04  1.303E-04  2.613E-05  5.252E-06  1.054E-06  2.114E-07
4.240E-08  8.505E-09  1.709E-09  3.429E-10
  PM 149    4.798E-03  2.143E-19  2.377E-32  0.         0.         0.
0.         0.         0.         0.
  PM 151    1.094E-03  3.169E-34  0.         0.         0.         0.
0.         0.         0.         0.
  PM 152    1.460E-06  0.         0.         0.         0.         0.
0.         0.         0.         0.
  PM 153    6.937E-07  0.         0.         0.         0.         0.
0.         0.         0.         0.
  PM 154    2.282E-07  0.         0.         0.         0.         0.
0.         0.         0.         0.
  TOTAL     3.155E-01  3.181E-01  2.969E-01  2.771E-01  2.587E-01  2.414E-01
2.254E-01  2.104E-01  1.964E-01  1.833E-01


 ORR   FUEL SOURCE, 22.5 MW 156  DAY  ACTIVITY AFTER SHUTDOWN - CURIES
3510.0 MWD IN  156.0 DAYS.

AT. NO. 62 SM

 ISOTOPE
                SHUTDOWN 120.0 DAYS 215.0 DAYS 310.0 DAYS   1.1 YRS.   1.4 YRS.
1.6 YRS.   1.9 YRS.   2.2 YRS.   2.4 YRS.
```

```
  SM 147    0.          0.          0.          0.          0.          0.
0.          0.          0.          0.
  SM 148    0.          0.          0.          0.          0.          0.
0.          0.          0.          0.
  SM 149    0.          0.          0.          0.          0.          0.
0.          0.          0.          0.
  SM 150    0.          0.          0.          0.          0.          0.
0.          0.          0.          0.
  SM 151    3.436E 01  3.864E 01  3.856E 01  3.848E 01  3.840E 01  3.833E 01
3.825E 01  3.817E 01  3.810E 01  3.802E 01
  SM 152    0.          0.          0.          0.          0.          0.
0.          0.          0.          0.
  SM 153    7.737E 04  2.730E-14  6.717E-29  0.          0.          0.
0.          0.          0.          0.
  SM 154    0.          0.          0.          0.          0.          0.
0.          0.          0.          0.
  SM 155    2.316E 04  0.          0.          0.          0.          0.
0.          0.          0.          0.
  SM 156    1.081E 04  0.          0.          0.          0.          0.
0.          0.          0.          0.
  TOTAL     1.114E 05  3.864E 01  3.856E 01  3.848E 01  3.840E 01  3.833E 01
3.825E 01  3.817E 01  3.810E 01  3.802E 01

CONCENTRATION AFTER SHUTDOWN - GRAM ATOMS
  SM 147    1.631E-02  4.476E-02  6.594E-02  8.568E-02  1.041E-01  1.213E-01
1.374E-01  1.524E-01  1.664E-01  1.795E-01
  SM 148    1.477E-02  1.706E-02  1.717E-02  1.719E-02  1.719E-02  1.719E-02
1.719E-02  1.719E-02  1.719E-02  1.719E-02
  SM 149    6.362E-03  1.130E-02  1.130E-02  1.130E-02  1.130E-02  1.130E-02
1.130E-02  1.130E-02  1.130E-02  1.130E-02
  SM 150    1.993E-01  1.993E-01  1.993E-01  1.993E-01  1.993E-01  1.993E-01
1.993E-01  1.993E-01  1.993E-01  1.993E-01
  SM 151    8.642E-03  9.719E-03  9.699E-03  9.680E-03  9.660E-03  9.641E-03
9.622E-03  9.603E-03  9.583E-03  9.564E-03
  SM 152    1.370E-01  1.370E-01  1.370E-01  1.370E-01  1.370E-01  1.370E-01
1.370E-01  1.370E-01  1.370E-01  1.370E-01
  SM 153    1.160E-03  4.094E-22  1.007E-36  0.          0.          0.
0.          0.          0.          0.
  SM 154    2.196E-02  2.196E-02  2.196E-02  2.196E-02  2.196E-02  2.196E-02
2.196E-02  2.196E-02  2.196E-02  2.196E-02
  SM 155    2.710E-06  0.          0.          0.          0.          0.
0.          0.          0.          0.
  SM 156    3.242E-05  0.          0.          0.          0.          0.
0.          0.          0.          0.
  TOTAL     4.056E-01  4.412E-01  4.624E-01  4.822E-01  5.006E-01  5.178E-01
5.339E-01  5.488E-01  5.628E-01  5.759E-01


 ORR   FUEL SOURCE, 22.5 MW 156  DAY  ACTIVITY AFTER SHUTDOWN - CURIES
3510.0 MWD IN  156.0 DAYS.
-
-
AT. NO. 63 EU

 ISOTOPE
-              SHUTDOWN 120.0 DAYS 215.0 DAYS 310.0 DAYS   1.1 YRS.   1.4 YRS.
1.6 YRS.   1.9 YRS.   2.2 YRS.   2.4 YRS.
  EU 151    0.          0.          0.          0.          0.          0.
0.          0.          0.          0.
  EU*152    1.059E 01  0.          0.          0.          0.          0.
0.          0.          0.          0.
```

```
  EU 152     1.033E-01  1.015E-01  1.001E-01  9.875E-02  9.739E-02  9.604E-02
9.472E-02  9.341E-02  9.213E-02  9.086E-02
  EU 153     0.         0.         0.         0.         0.         0.
0.         0.         0.         0.
  EU 154     7.324E 01  7.220E 01  7.139E 01  7.059E 01  6.980E 01  6.902E 01
6.824E 01  6.748E 01  6.672E 01  6.597E 01
  EU 155     3.680E 02  3.247E 02  2.938E 02  2.658E 02  2.404E 02  2.175E 02
1.967E 02  1.780E 02  1.610E 02  1.457E 02
  EU 156     3.262E 04  1.284E 02  1.591E 00  1.982E-02  2.455E-04  3.042E-06
3.768E-08  4.669E-10  5.815E-12  7.204E-14
  EU 157     7.123E 03  0.         0.         0.         0.         0.
0.         0.         0.         0.
  EU 158     3.656E 03  0.         0.         0.         0.         0.
0.         0.         0.         0.
  EU 159     9.623E 02  0.         0.         0.         0.         0.
0.         0.         0.         0.
  EU 160     2.097E 02  0.         0.         0.         0.         0.
0.         0.         0.         0.
  TOTAL      4.502E 04  5.255E 02  3.668E 02  3.365E 02  3.103E 02  2.866E 02
2.651E 02  2.455E 02  2.278E 02  2.117E 02

CONCENTRATION AFTER SHUTDOWN - GRAM ATOMS
  EU 151     3.532E-06  2.814E-05  4.760E-05  6.701E-05  8.640E-05  1.057E-04
1.251E-04  1.443E-04  1.635E-04  1.827E-04
  EU*152     3.141E-08  0.         0.         0.         0.         0.
0.         0.         0.         0.
  EU 152     3.754E-06  3.689E-06  3.638E-06  3.588E-06  3.538E-06  3.490E-06
3.442E-06  3.394E-06  3.347E-06  3.301E-06
  EU 153     3.812E-02  3.928E-02  3.928E-02  3.928E-02  3.928E-02  3.928E-02
3.928E-02  3.928E-02  3.928E-02  3.928E-02
  EU 154     3.275E-03  3.229E-03  3.193E-03  3.157E-03  3.121E-03  3.086E-03
3.052E-03  3.018E-03  2.984E-03  2.950E-03
  EU 155     1.852E-03  1.634E-03  1.478E-03  1.337E-03  1.210E-03  1.094E-03
9.898E-04  8.954E-04  8.101E-04  7.328E-04
  EU 156     3.747E-03  1.475E-05  1.828E-07  2.276E-09  2.820E-11  3.494E-13
4.328E-15  5.362E-17  6.679E-19  8.274E-21
  EU 157     3.500E-05  0.         0.         0.         0.         0.
0.         0.         0.         0.
  EU 158     8.941E-07  0.         0.         0.         0.         0.
0.         0.         0.         0.
  EU 159     9.720E-08  0.         0.         0.         0.         0.
0.         0.         0.         0.
  EU 160     2.787E-09  0.         0.         0.         0.         0.
0.         0.         0.         0.
  TOTAL      4.704E-02  4.419E-02  4.400E-02  4.385E-02  4.370E-02  4.357E-02
4.345E-02  4.334E-02  4.324E-02  4.315E-02


 ORR   FUEL SOURCE, 22.5 MW 156  DAY  ACTIVITY AFTER SHUTDOWN - CURIES
3510.0 MWD IN  156.0 DAYS.

AT. NO. 64 GD

 ISOTOPE
              SHUTDOWN 120.0 DAYS 215.0 DAYS 310.0 DAYS   1.1 YRS.   1.4 YRS.
1.6 YRS.   1.9 YRS.   2.2 YRS.   2.4 YRS.
  GD 152     0.         0.         0.         0.         0.         0.
0.         0.         0.         0.
  GD 154     0.         0.         0.         0.         0.         0.
0.         0.         0.         0.
```

```
  GD 155    0.          0.          0.          0.          0.          0.
0.          0.          0.          0.
  GD 156    0.          0.          0.          0.          0.          0.
0.          0.          0.          0.
  GD 157    0.          0.          0.          0.          0.          0.
0.          0.          0.          0.
  GD 158    0.          0.          0.          0.          0.          0.
0.          0.          0.          0.
  GD 159    1.936E 03   0.          0.          0.          0.          0.
0.          0.          0.          0.
  GD 160    0.          0.          0.          0.          0.          0.
0.          0.          0.          0.
  GD 161    1.165E 03   0.          0.          0.          0.          0.
0.          0.          0.          0.
  GD 162    2.287E 01   1.821E 01   1.520E 01   1.269E 01   1.060E 01   8.848E 00
7.387E 00   6.168E 00   5.150E 00   4.300E 00
  TOTAL     3.124E 03   1.821E 01   1.520E 01   1.269E 01   1.060E 01   8.848E 00
7.387E 00   6.168E 00   5.150E 00   4.300E 00

CONCENTRATION AFTER SHUTDOWN - GRAM ATOMS
  GD 152    5.619E-06   5.716E-06   5.766E-06   5.817E-06   5.866E-06   5.915E-06
5.963E-06   6.010E-06   6.057E-06   6.103E-06
  GD 154    1.977E-05   6.609E-05   1.023E-04   1.381E-04   1.735E-04   2.085E-04
2.431E-04   2.773E-04   3.111E-04   3.446E-04
  GD 155    5.826E-06   2.264E-04   3.822E-04   5.230E-04   6.506E-04   7.659E-04
8.703E-04   9.647E-04   1.050E-03   1.127E-03
  GD 156    1.427E-02   1.804E-02   1.805E-02   1.805E-02   1.805E-02   1.805E-02
1.805E-02   1.805E-02   1.805E-02   1.805E-02
  GD 157    2.763E-05   6.263E-05   6.263E-05   6.263E-05   6.263E-05   6.263E-05
6.263E-05   6.263E-05   6.263E-05   6.263E-05
  GD 158    5.516E-03   5.517E-03   5.517E-03   5.517E-03   5.517E-03   5.517E-03
5.517E-03   5.517E-03   5.517E-03   5.517E-03
  GD 159    1.112E-05   0.          0.          0.          0.          0.
0.          0.          0.          0.
  GD 160    3.818E-04   3.818E-04   3.818E-04   3.818E-04   3.818E-04   3.818E-04
3.818E-04   3.818E-04   3.818E-04   3.818E-04
  GD 161    2.292E-08   0.          0.          0.          0.          0.
0.          0.          0.          0.
  GD 162    6.391E-05   5.089E-05   4.248E-05   3.548E-05   2.962E-05   2.473E-05
2.065E-05   1.724E-05   1.439E-05   1.202E-05
  TOTAL     2.030E-02   2.435E-02   2.455E-02   2.471E-02   2.487E-02   2.502E-02
2.515E-02   2.528E-02   2.539E-02   2.550E-02


 ORR   FUEL SOURCE, 22.5 MW 156  DAY  ACTIVITY AFTER SHUTDOWN - CURIES
3510.0 MWD IN  156.0 DAYS.

AT. NO. 65 TB

 ISOTOPE
              SHUTDOWN 120.0 DAYS 215.0 DAYS 310.0 DAYS   1.1 YRS.   1.4 YRS.
1.6 YRS.    1.9 YRS.    2.2 YRS.    2.4 YRS.
  TB 159    0.          0.          0.          0.          0.          0.
0.          0.          0.          0.
  TB 160    1.616E 01   5.171E 00   2.098E 00   8.518E-01   3.455E-01   1.402E-01
5.686E-02   2.307E-02   9.367E-03   3.800E-03
  TB 161    1.187E 03   6.890E-03   4.928E-07   3.566E-11   2.550E-15   1.824E-19
1.304E-23   9.328E-28   6.749E-32   0.
  TB 162    2.284E 01   1.821E 01   1.520E 01   1.270E 01   1.060E 01   8.850E 00
7.389E 00   6.169E 00   5.152E 00   4.301E 00
```

```
  TB 163     3.443E 01  0.          0.          0.          0.          0.
0.          0.          0.          0.
  TOTAL      1.260E 03  2.339E 01  1.730E 01  1.355E 01  1.095E 01  8.990E 00
7.446E 00  6.192E 00  5.161E 00  4.305E 00

CONCENTRATION AFTER SHUTDOWN - GRAM ATOMS
  TB 159     9.355E-04  9.467E-04  9.467E-04  9.467E-04  9.467E-04  9.467E-04
9.467E-04  9.467E-04  9.467E-04  9.467E-04
  TB 160     9.034E-06  2.890E-06  1.172E-06  4.761E-07  1.932E-07  7.835E-08
3.178E-08  1.289E-08  5.236E-09  2.124E-09
  TB 161     6.270E-05  3.641E-10  2.604E-14  1.884E-18  1.347E-22  9.636E-27
6.891E-31  4.929E-35  3.566E-39  0.
  TB 162     1.457E-08  1.162E-08  9.701E-09  8.102E-09  6.764E-09  5.647E-09
4.715E-09  3.936E-09  3.287E-09  2.744E-09
  TB 163     7.689E-08  0.          0.          0.          0.          0.
0.          0.          0.          0.
  TOTAL      1.007E-03  9.496E-04  9.479E-04  9.472E-04  9.469E-04  9.468E-04
9.467E-04  9.467E-04  9.467E-04  9.467E-04


 ORR   FUEL SOURCE, 22.5 MW 156  DAY  ACTIVITY AFTER SHUTDOWN - CURIES
3510.0 MWD IN  156.0 DAYS.

AT. NO. 66 DY

 ISOTOPE
              SHUTDOWN 120.0 DAYS 215.0 DAYS 310.0 DAYS   1.1 YRS.   1.4 YRS.
1.6 YRS.   1.9 YRS.   2.2 YRS.   2.4 YRS.
  DY 160     0.          0.          0.          0.          0.          0.
0.          0.          0.          0.
  DY 161     0.          0.          0.          0.          0.          0.
0.          0.          0.          0.
  DY 162     0.          0.          0.          0.          0.          0.
0.          0.          0.          0.
  DY 163     0.          0.          0.          0.          0.          0.
0.          0.          0.          0.
  DY 164     0.          0.          0.          0.          0.          0.
0.          0.          0.          0.
  DY*165     2.451E 01  0.          0.          0.          0.          0.
0.          0.          0.          0.
  DY 165     2.930E 01  0.          0.          0.          0.          0.
0.          0.          0.          0.
  DY 166     5.834E 00  8.430E-11  2.206E-19  5.914E-28  0.          0.
0.          0.          0.          0.
  TOTAL      5.964E 01  8.430E-11  2.206E-19  5.914E-28  0.          0.
0.          0.          0.          0.

CONCENTRATION AFTER SHUTDOWN - GRAM ATOMS
  DY 160     4.016E-06  1.016E-05  1.188E-05  1.257E-05  1.286E-05  1.297E-05
1.302E-05  1.304E-05  1.304E-05  1.305E-05
  DY 161     8.126E-04  8.753E-04  8.753E-04  8.753E-04  8.753E-04  8.753E-04
8.753E-04  8.753E-04  8.753E-04  8.753E-04
  DY 162     2.200E-04  2.330E-04  2.414E-04  2.484E-04  2.543E-04  2.592E-04
2.632E-04  2.666E-04  2.695E-04  2.719E-04
  DY 163     3.915E-05  3.923E-05  3.923E-05  3.923E-05  3.923E-05  3.923E-05
3.923E-05  3.923E-05  3.923E-05  3.923E-05
  DY 164     6.612E-06  6.612E-06  6.612E-06  6.612E-06  6.612E-06  6.612E-06
6.612E-06  6.612E-06  6.612E-06  6.612E-06
  DY*165     1.638E-10  0.          0.          0.          0.          0.
0.          0.          0.          0.
```

```
  DY 165    2.150E-08  0.         0.         0.         0.         0.
0.         0.         0.         0.
  DY 166    1.489E-07  2.152E-18  5.630E-27  1.509E-35  0.         0.
0.         0.         0.         0.
  TOTAL     1.082E-03  1.164E-03  1.174E-03  1.182E-03  1.188E-03  1.193E-03
1.197E-03  1.201E-03  1.204E-03  1.206E-03


 ORR   FUEL SOURCE, 22.5 MW 156  DAY  ACTIVITY AFTER SHUTDOWN - CURIES
3510.0 MWD IN  156.0 DAYS.

AT. NO. 67 HO

 ISOTOPE
              SHUTDOWN 120.0 DAYS 215.0 DAYS 310.0 DAYS   1.1 YRS.   1.4 YRS.
1.6 YRS.   1.9 YRS.   2.2 YRS.   2.4 YRS.
  HO 165    0.         0.         0.         0.         0.         0.
0.         0.         0.         0.
  HO 166    6.535E 00  1.277E-10  3.342E-19  8.959E-28  0.         0.
0.         0.         0.         0.
  TOTAL     6.535E 00  1.277E-10  3.342E-19  8.959E-28  0.         0.
0.         0.         0.         0.

CONCENTRATION AFTER SHUTDOWN - GRAM ATOMS
  HO 165    1.100E-05  1.102E-05  1.102E-05  1.102E-05  1.102E-05  1.102E-05
1.102E-05  1.102E-05  1.102E-05  1.102E-05
  HO 166    5.670E-08  1.108E-18  2.900E-27  7.773E-36  0.         0.
0.         0.         0.         0.
  TOTAL     1.105E-05  1.102E-05  1.102E-05  1.102E-05  1.102E-05  1.102E-05
1.102E-05  1.102E-05  1.102E-05  1.102E-05


 ORR   FUEL SOURCE, 22.5 MW 156  DAY  ACTIVITY AFTER SHUTDOWN - CURIES
3510.0 MWD IN  156.0 DAYS.

AT. NO. 68 ER

 ISOTOPE
              SHUTDOWN 120.0 DAYS 215.0 DAYS 310.0 DAYS   1.1 YRS.   1.4 YRS.
1.6 YRS.   1.9 YRS.   2.2 YRS.   2.4 YRS.
  ER 166    0.         0.         0.         0.         0.         0.
0.         0.         0.         0.
  ER*167    3.461E-04  0.         0.         0.         0.         0.
0.         0.         0.         0.
  ER 167    0.         0.         0.         0.         0.         0.
0.         0.         0.         0.
  TOTAL     3.461E-04  0.         0.         0.         0.         0.
0.         0.         0.         0.

CONCENTRATION AFTER SHUTDOWN - GRAM ATOMS
  ER 166    2.693E-06  2.898E-06  2.898E-06  2.898E-06  2.898E-06  2.898E-06
2.898E-06  2.898E-06  2.898E-06  2.898E-06
  ER*167    7.664E-17  0.         0.         0.         0.         0.
0.         0.         0.         0.
  ER 167    8.124E-09  8.124E-09  8.124E-09  8.124E-09  8.124E-09  8.124E-09
8.124E-09  8.124E-09  8.124E-09  8.124E-09
  TOTAL     2.701E-06  2.906E-06  2.906E-06  2.906E-06  2.906E-06  2.906E-06
2.906E-06  2.906E-06  2.906E-06  2.906E-06
```

ORR FUEL SOURCE, 22.5 MW 156 DAY ACTIVITY AFTER SHUTDOWN - CURIES
3510.0 MWD IN 156.0 DAYS.

SUMMARY

ELEMENT	SHUTDOWN	120.0 DAYS	215.0 DAYS	310.0 DAYS	1.1 YRS.	1.4 YRS.	1.6 YRS.	1.9 YRS.	2.2 YRS.	2.4 YRS.
30 ZN	2.204E 01	2.704E-18	4.701E-33	0.	0.	0.	0.	0.	0.	0.
31 GA	2.035E 02	3.881E-18	6.747E-33	0.	0.	0.	0.	0.	0.	0.
32 GE	3.135E 03	0.	0.	0.	0.	0.	0.	0.	0.	0.
33 AS	9.624E 04	6.961E-20	0.	0.	0.	0.	0.	0.	0.	0.
34 SE	7.273E 05	2.410E-02	2.410E-02	2.410E-02	2.410E-02	2.410E-02	2.410E-02	2.410E-02	2.410E-02	2.410E-02
35 BR	1.819E 06	1.371E-23	0.	0.	0.	0.	0.	0.	0.	0.
36 KR	4.703E 06	1.329E 03	1.307E 03	1.285E 03	1.263E 03	1.242E 03	1.222E 03	1.201E 03	1.181E 03	1.162E 03
37 RB	6.813E 06	1.722E 00	5.086E-02	1.509E-03	4.456E-05	1.316E-06	3.887E-08	1.148E-09	3.406E-11	1.006E-12
38 SR	6.332E 06	1.375E 05	4.579E 04	1.990E 04	1.255E 04	1.043E 04	9.790E 03	9.566E 03	9.459E 03	9.385E 03
39 Y	6.839E 06	1.988E 05	7.170E 04	3.004E 04	1.633E 04	1.180E 04	1.028E 04	9.738E 03	9.520E 03	9.408E 03
40 ZR	2.694E 06	2.659E 05	9.653E 04	3.509E 04	1.274E 04	4.624E 03	1.679E 03	6.097E 02	2.218E 02	8.075E 01
41 NB	6.465E 06	4.606E 05	1.929E 05	7.402E 04	2.747E 04	1.006E 04	3.667E 03	1.333E 03	4.850E 02	1.761E 02
42 MO	4.121E 06	8.428E-08	3.343E-18	1.365E-28	0.	0.	0.	0.	0.	0.
43 TC	4.598E 06	1.618E 00	1.618E 00	1.618E 00	1.618E 00	1.618E 00	1.618E 00	1.618E 00	1.618E 00	1.618E 00
44 RU	1.387E 06	1.436E 05	6.434E 04	4.303E 04	3.386E 04	2.787E 04	2.319E 04	1.935E 04	1.615E 04	1.349E 04
45 RH	1.682E 06	1.432E 05	6.427E 04	4.302E 04	3.386E 04	2.787E 04	2.319E 04	1.935E 04	1.615E 04	1.349E 04
46 PD	2.882E 05	2.414E-04	2.414E-04	2.414E-04	2.414E-04	2.414E-04	2.414E-04	2.414E-04	2.414E-04	2.414E-04
47 AG	1.938E 05	1.814E 01	1.383E 01	1.074E 01	8.336E 00	6.471E 00	5.023E 00	3.899E 00	3.027E 00	2.350E 00
48 CD	6.302E 03	1.398E 01	3.024E 00	6.560E-01	1.430E-01	3.204E-02	8.048E-03	2.848E-03	1.710E-03	1.450E-03
49 IN	8.788E 03	4.028E-07	1.079E-07	2.894E-08	7.753E-09	2.077E-09	5.563E-10	1.490E-10	3.998E-11	1.071E-11
50 SN	5.259E 05	7.675E 01	5.328E 01	3.838E 01	2.830E 01	2.137E 01	1.652E 01	1.308E 01	1.060E 01	8.786E 00
51 SB	3.869E 06	6.439E 02	6.019E 02	5.629E 02	5.265E 02	4.924E 02	4.606E 02	4.308E 02	4.030E 02	3.770E 02
52 TE	4.892E 06	1.760E 04	5.243E 03	2.295E 03	1.210E 03	6.941E 02	4.239E 02	2.772E 02	1.959E 02	1.493E 02
53 I	7.796E 06	2.152E 01	9.491E-03	3.479E-03	3.478E-03	3.478E-03	3.478E-03	3.478E-03	3.478E-03	3.478E-03
54 XE	6.928E 06	1.423E 01	5.911E-02	2.463E-04	1.018E-06	4.208E-09	1.739E-11	7.188E-14	2.991E-16	1.236E-18

55 CS	6.867E 06	1.343E 04	1.320E 04	1.300E 04	1.281E 04	1.263E 04	1.246E 04	1.230E 04	1.214E 04	1.200E 04
56 BA	6.355E 06	1.243E 04	1.069E 04	1.061E 04	1.055E 04	1.049E 04	1.042E 04	1.036E 04	1.030E 04	1.024E 04
57 LA	5.284E 06	1.943E 03	1.132E 01	6.635E-02	3.865E-04	2.251E-06	1.311E-08	7.637E-11	4.476E-13	2.607E-15
58 CE	4.206E 06	3.291E 05	2.059E 05	1.562E 05	1.230E 05	9.751E 04	7.737E 04	6.140E 04	4.875E 04	3.869E 04
59 PR	3.285E 06	2.484E 05	1.950E 05	1.548E 05	1.228E 05	9.749E 04	7.737E 04	6.141E 04	4.875E 04	3.869E 04
60 ND	8.312E 05	2.573E 02	6.816E-01	1.818E-03	4.816E-06	1.276E-08	3.378E-11	8.948E-14	2.387E-16	6.323E-19
61 PM	5.675E 05	4.386E 04	4.063E 04	3.787E 04	3.534E 04	3.298E 04	3.079E 04	2.874E 04	2.683E 04	2.504E 04
62 SM	1.114E 05	3.864E 01	3.856E 01	3.848E 01	3.840E 01	3.833E 01	3.825E 01	3.817E 01	3.810E 01	3.802E 01
63 EU	4.502E 04	5.255E 02	3.668E 02	3.365E 02	3.103E 02	2.866E 02	2.651E 02	2.455E 02	2.278E 02	2.117E 02
64 GD	3.124E 03	1.821E 01	1.520E 01	1.269E 01	1.060E 01	8.848E 00	7.387E 00	6.168E 00	5.150E 00	4.300E 00
65 TB	1.260E 03	2.339E 01	1.730E 01	1.355E 01	1.095E 01	8.990E 00	7.446E 00	6.192E 00	5.161E 00	4.305E 00
66 DY	5.964E 01	8.430E-11	2.206E-19	5.914E-28	0.	0.	0.	0.	0.	0.
67 HO	6.535E 00	1.277E-10	3.342E-19	8.959E-28	0.	0.	0.	0.	0.	0.
68 ER	3.461E-04	0.	0.	0.	0.	0.	0.	0.	0.	0.
TOTAL	1.003E 08	2.020E 06	1.009E 06	6.222E 05	4.448E 05	3.466E 05	2.827E 05	2.364E 05	2.008E 05	1.726E 05

ORR FUEL SOURCE, 22.5 MW 156 DAY ACTIVITY AFTER SHUTDOWN - CURIES
3510.0 MWD IN 156.0 DAYS.

SUMMARY

ELEMENT	SHUTDOWN	120.0 DAYS	215.0 DAYS	310.0 DAYS	1.1 YRS.	1.4 YRS.	1.6 YRS.	1.9 YRS.	2.2 YRS.	2.4 YRS.
NOBLE GAS	1.163E 07	1.343E 03	1.307E 03	1.285E 03	1.263E 03	1.242E 03	1.222E 03	1.201E 03	1.181E 03	1.162E 03
HALOGENS	9.615E 06	2.152E 01	9.491E-03	3.479E-03	3.478E-03	3.478E-03	3.478E-03	3.478E-03	3.478E-03	3.478E-03
VOL. SOL.	2.738E 07	3.167E 04	1.904E 04	1.585E 04	1.454E 04	1.381E 04	1.334E 04	1.301E 04	1.274E 04	1.253E 04
A.R.F.P.	5.171E 07	1.986E 06	9.883E 05	6.050E 05	4.290E 05	3.315E 05	2.681E 05	2.222E 05	1.869E 05	1.589E 05

ORR FUEL SOURCE, 22.5 MW 156 DAY
3510.0 MWD IN 156.0 DAYS

SUMMARY

CONCENTRATION AFTER SHUTDOWN - GRAM ATOMS

ELEMENT	SHUTDOWN	120.0 DAYS	215.0 DAYS	310.0 DAYS	1.1 YRS.	1.4 YRS.	1.6 YRS.	1.9 YRS.	2.2 YRS.	2.4 YRS.
30 ZN	1.765E-07	4.013E-26	0.	0.	0.	0.	0.	0.	0.	0.
31 GA	7.147E-08	1.746E-26	0.	0.	0.	0.	0.	0.	0.	0.
32 GE	2.982E-04	2.954E-04	2.954E-04	2.954E-04	2.954E-04	2.954E-04	2.954E-04	2.954E-04	2.954E-04	2.954E-04
33 AS	1.072E-04	9.411E-05	9.411E-05	9.411E-05	9.411E-05	9.411E-05	9.411E-05	9.411E-05	9.411E-05	9.411E-05
34 SE	1.757E-02	1.758E-02	1.758E-02	1.758E-02	1.758E-02	1.758E-02	1.758E-02	1.758E-02	1.758E-02	1.758E-02
35 BR	1.579E-02	1.570E-02	1.570E-02	1.570E-02	1.570E-02	1.570E-02	1.570E-02	1.570E-02	1.570E-02	1.570E-02
36 KR	5.141E-01	5.125E-01	5.119E-01	5.112E-01	5.106E-01	5.099E-01	5.093E-01	5.087E-01	5.081E-01	5.075E-01
37 RB	5.109E-01	5.120E-01	5.127E-01	5.133E-01	5.140E-01	5.146E-01	5.152E-01	5.158E-01	5.164E-01	5.170E-01
38 SR	1.526E 00	1.316E 00	1.274E 00	1.259E 00	1.251E 00	1.246E 00	1.241E 00	1.236E 00	1.231E 00	1.226E 00
39 Y	7.327E-01	6.675E-01	6.466E-01	6.381E-01	6.348E-01	6.336E-01	6.332E-01	6.330E-01	6.330E-01	6.330E-01
40 ZR	4.587E 00	4.513E 00	4.491E 00	4.484E 00	4.484E 00	4.487E 00	4.491E 00	4.496E 00	4.500E 00	4.505E 00
41 NB	2.051E-01	1.221E-01	5.121E-02	1.966E-02	7.298E-03	2.675E-03	9.755E-04	3.556E-04	1.304E-04	4.855E-05
42 MO	3.207E 00	3.615E 00	3.770E 00	3.832E 00	3.856E 00	3.864E 00	3.868E 00	3.869E 00	3.869E 00	3.869E 00
43 TC	1.086E 00	1.110E 00	1.110E 00	1.110E 00	1.110E 00	1.110E 00	1.110E 00	1.110E 00	1.110E 00	1.110E 00
44 RU	2.418E 00	2.191E 00	2.143E 00	2.117E 00	2.098E 00	2.083E 00	2.070E 00	2.059E 00	2.050E 00	2.043E 00
45 RH	3.505E-01	5.321E-01	5.535E-01	5.576E-01	5.584E-01	5.586E-01	5.586E-01	5.586E-01	5.586E-01	5.586E-01
46 PD	3.961E-01	4.410E-01	4.673E-01	4.893E-01	5.077E-01	5.230E-01	5.358E-01	5.465E-01	5.554E-01	5.629E-01
47 AG	5.772E-02	5.703E-02	5.703E-02	5.702E-02	5.701E-02	5.701E-02	5.701E-02	5.701E-02	5.700E-02	5.700E-02
48 CD	2.210E-02	2.336E-02	2.336E-02	2.337E-02	2.337E-02	2.337E-02	2.338E-02	2.338E-02	2.338E-02	2.338E-02
49 IN	1.165E-03	1.214E-03	1.218E-03	1.218E-03	1.219E-03	1.219E-03	1.219E-03	1.219E-03	1.219E-03	1.219E-03
50 SN	3.054E-02	2.989E-02	2.988E-02	2.987E-02	2.986E-02	2.986E-02	2.986E-02	2.985E-02	2.985E-02	2.985E-02
51 SB	1.209E-02	9.997E-03	9.698E-03	9.414E-03	9.146E-03	8.893E-03	8.657E-03	8.435E-03	8.227E-03	8.032E-03
52 TE	4.397E-01	3.977E-01	3.955E-01	3.950E-01	3.949E-01	3.949E-01	3.951E-01	3.952E-01	3.954E-01	3.956E-01
53 I	2.268E-01	1.965E-01	1.990E-01	1.998E-01	2.002E-01	2.004E-01	2.005E-01	2.006E-01	2.006E-01	2.006E-01
54 XE	4.392E 00	4.405E 00	4.405E 00	4.405E 00	4.405E 00	4.405E 00	4.405E 00	4.405E 00	4.405E 00	4.405E 00
55 CS	2.063E 00	2.115E 00	2.108E 00	2.101E 00	2.095E 00	2.089E 00	2.082E 00	2.076E 00	2.070E 00	2.064E 00
56 BA	1.052E 00	9.511E-01	9.577E-01	9.643E-01	9.708E-01	9.772E-01	9.835E-01	9.898E-01	9.959E-01	1.002E 00
57 LA	9.504E-01	9.343E-01	9.343E-01	9.343E-01	9.343E-01	9.343E-01	9.343E-01	9.343E-01	9.343E-01	9.343E-01

```
 58 CE      2.733E 00  2.418E 00  2.290E 00  2.200E 00  2.130E 00  2.074E 00
2.030E 00  1.995E 00  1.968E 00  1.946E 00
 59 PR      7.729E-01  9.046E-01  9.223E-01  9.247E-01  9.250E-01  9.250E-01
9.251E-01  9.251E-01  9.250E-01  9.250E-01
 60 ND      2.514E 00  2.784E 00  2.895E 00  2.983E 00  3.052E 00  3.108E 00
3.151E 00  3.186E 00  3.214E 00  3.236E 00
 61 PM      3.155E-01  3.181E-01  2.969E-01  2.771E-01  2.587E-01  2.414E-01
2.254E-01  2.104E-01  1.964E-01  1.833E-01
 62 SM      4.056E-01  4.412E-01  4.624E-01  4.822E-01  5.006E-01  5.178E-01
5.339E-01  5.488E-01  5.628E-01  5.759E-01
 63 EU      4.704E-02  4.419E-02  4.400E-02  4.385E-02  4.370E-02  4.357E-02
4.345E-02  4.334E-02  4.324E-02  4.315E-02
 64 GD      2.030E-02  2.435E-02  2.455E-02  2.471E-02  2.487E-02  2.502E-02
2.515E-02  2.528E-02  2.539E-02  2.550E-02
 65 TB      1.007E-03  9.496E-04  9.479E-04  9.472E-04  9.469E-04  9.468E-04
9.467E-04  9.467E-04  9.467E-04  9.467E-04
 66 DY      1.082E-03  1.164E-03  1.174E-03  1.182E-03  1.188E-03  1.193E-03
1.197E-03  1.201E-03  1.204E-03  1.206E-03
 67 HO      1.105E-05  1.102E-05  1.102E-05  1.102E-05  1.102E-05  1.102E-05
1.102E-05  1.102E-05  1.102E-05  1.102E-05
 68 ER      2.701E-06  2.906E-06  2.906E-06  2.906E-06  2.906E-06  2.906E-06
2.906E-06  2.906E-06  2.906E-06  2.906E-06
  TOTAL     3.162E 01  3.162E 01  3.162E 01  3.162E 01  3.162E 01  3.162E 01
3.162E 01  3.162E 01  3.162E 01  3.162E 01

  POISON       50.7       48.7       49.1       49.4       49.7       49.9
50.0       50.2       50.3       50.4
    TOTAL BARNS/TOTAL FISSIONS - EXCLUDING XE 135, SM 149, AND SM 151


 ORR   FUEL SOURCE, 22.5 MW 156  DAY
3510.0 MWD IN  156.0 DAYS

SUMMARY

CONCENTRATION AFTER SHUTDOWN - GRAMS

 ELEMENT
              SHUTDOWN 120.0 DAYS 215.0 DAYS 310.0 DAYS   1.1 YRS.   1.4 YRS.
1.6 YRS.   1.9 YRS.   2.2 YRS.   2.4 YRS.
 30 ZN      1.271E-05  2.889E-24  0.         0.         0.         0.
0.         0.         0.         0.
 31 GA      5.167E-06  1.257E-24  0.         0.         0.         0.
0.         0.         0.         0.
 32 GE      2.252E-02  2.230E-02  2.230E-02  2.230E-02  2.230E-02  2.230E-02
2.230E-02  2.230E-02  2.230E-02  2.230E-02
 33 AS      8.067E-03  7.058E-03  7.058E-03  7.058E-03  7.058E-03  7.058E-03
7.058E-03  7.058E-03  7.058E-03  7.058E-03
 34 SE      1.393E 00  1.394E 00  1.394E 00  1.394E 00  1.394E 00  1.394E 00
1.394E 00  1.394E 00  1.394E 00  1.394E 00
 35 BR      1.279E 00  1.272E 00  1.272E 00  1.272E 00  1.272E 00  1.272E 00
1.272E 00  1.272E 00  1.272E 00  1.272E 00
 36 KR      4.370E 01  4.357E 01  4.351E 01  4.345E 01  4.340E 01  4.335E 01
4.329E 01  4.324E 01  4.319E 01  4.314E 01
 37 RB      4.414E 01  4.423E 01  4.429E 01  4.434E 01  4.440E 01  4.445E 01
4.450E 01  4.455E 01  4.460E 01  4.466E 01
 38 SR      1.361E 02  1.174E 02  1.137E 02  1.123E 02  1.116E 02  1.111E 02
1.107E 02  1.102E 02  1.098E 02  1.094E 02
 39  Y      6.593E 01  5.958E 01  5.760E 01  5.681E 01  5.650E 01  5.639E 01
5.635E 01  5.634E 01  5.633E 01  5.633E 01
```

40 ZR	4.296E 02	4.215E 02	4.192E 02	4.184E 02	4.184E 02	4.186E 02	4.190E 02	4.194E 02	4.198E 02	4.202E 02
41 NB	1.949E 01	1.160E 01	4.865E 00	1.868E 00	6.933E-01	2.541E-01	9.267E-02	3.378E-02	1.239E-02	4.609E-03
42 MO	3.145E 02	3.532E 02	3.679E 02	3.738E 02	3.761E 02	3.769E 02	3.772E 02	3.773E 02	3.773E 02	3.773E 02
43 TC	1.088E 02	1.112E 02	1.112E 02	1.112E 02	1.112E 02	1.112E 02	1.112E 02	1.112E 02	1.112E 02	1.112E 02
44 RU	2.477E 02	2.242E 02	2.192E 02	2.165E 02	2.144E 02	2.128E 02	2.114E 02	2.103E 02	2.093E 02	2.086E 02
45 RH	3.611E 01	5.481E 01	5.701E 01	5.743E 01	5.751E 01	5.753E 01	5.753E 01	5.753E 01	5.753E 01	5.753E 01
46 PD	4.195E 01	4.670E 01	4.949E 01	5.182E 01	5.377E 01	5.539E 01	5.675E 01	5.788E 01	5.883E 01	5.962E 01
47 AG	6.294E 00	6.217E 00	6.216E 00	6.215E 00	6.215E 00	6.214E 00	6.214E 00	6.214E 00	6.213E 00	6.213E 00
48 CD	2.474E 00	2.612E 00	2.613E 00	2.613E 00	2.614E 00	2.614E 00	2.615E 00	2.615E 00	2.615E 00	2.615E 00
49 IN	1.340E-01	1.396E-01	1.400E-01	1.401E-01	1.401E-01	1.401E-01	1.401E-01	1.401E-01	1.401E-01	1.401E-01
50 SN	3.787E 00	3.707E 00	3.705E 00	3.704E 00	3.703E 00	3.703E 00	3.702E 00	3.702E 00	3.702E 00	3.701E 00
51 SB	1.500E 00	1.233E 00	1.195E 00	1.160E 00	1.126E 00	1.095E 00	1.065E 00	1.037E 00	1.011E 00	9.870E-01
52 TE	5.701E 01	5.153E 01	5.125E 01	5.118E 01	5.117E 01	5.117E 01	5.119E 01	5.121E 01	5.123E 01	5.126E 01
53 I	2.932E 01	2.527E 01	2.558E 01	2.569E 01	2.574E 01	2.576E 01	2.577E 01	2.578E 01	2.579E 01	2.579E 01
54 XE	5.896E 02	5.912E 02	5.912E 02	5.912E 02	5.912E 02	5.912E 02	5.912E 02	5.912E 02	5.912E 02	5.912E 02
55 CS	2.785E 02	2.854E 02	2.845E 02	2.836E 02	2.827E 02	2.818E 02	2.810E 02	2.801E 02	2.793E 02	2.784E 02
56 BA	1.453E 02	1.312E 02	1.321E 02	1.330E 02	1.339E 02	1.348E 02	1.357E 02	1.365E 02	1.373E 02	1.382E 02
57 LA	1.321E 02	1.299E 02	1.299E 02	1.299E 02	1.299E 02	1.299E 02	1.299E 02	1.299E 02	1.299E 02	1.299E 02
58 CE	3.876E 02	3.425E 02	3.241E 02	3.111E 02	3.010E 02	2.930E 02	2.867E 02	2.817E 02	2.777E 02	2.746E 02
59 PR	1.092E 02	1.275E 02	1.300E 02	1.304E 02	1.304E 02	1.304E 02	1.304E 02	1.304E 02	1.304E 02	1.304E 02
60 ND	3.648E 02	4.035E 02	4.195E 02	4.321E 02	4.421E 02	4.501E 02	4.564E 02	4.614E 02	4.654E 02	4.686E 02
61 PM	4.639E 01	4.677E 01	4.364E 01	4.074E 01	3.802E 01	3.549E 01	3.313E 01	3.092E 01	2.887E 01	2.695E 01
62 SM	6.113E 01	6.637E 01	6.949E 01	7.239E 01	7.510E 01	7.763E 01	7.999E 01	8.220E 01	8.425E 01	8.617E 01
63 EU	7.215E 00	6.768E 00	6.739E 00	6.714E 00	6.692E 00	6.672E 00	6.653E 00	6.636E 00	6.620E 00	6.606E 00
64 GD	3.180E 00	3.811E 00	3.841E 00	3.868E 00	3.892E 00	3.914E 00	3.935E 00	3.955E 00	3.973E 00	3.989E 00
65 TB	1.603E-01	1.510E-01	1.507E-01	1.506E-01	1.506E-01	1.505E-01	1.505E-01	1.505E-01	1.505E-01	1.505E-01
66 DY	1.746E-01	1.878E-01	1.894E-01	1.907E-01	1.916E-01	1.925E-01	1.931E-01	1.937E-01	1.941E-01	1.945E-01
67 HO	1.824E-03	1.818E-03	1.818E-03	1.818E-03	1.818E-03	1.818E-03	1.818E-03	1.818E-03	1.818E-03	1.818E-03
68 ER	4.483E-04	4.824E-04	4.824E-04	4.824E-04	4.824E-04	4.824E-04	4.824E-04	4.824E-04	4.824E-04	4.824E-04
TOTAL	3.717E 03	3.717E 03	3.717E 03	3.717E 03	3.717E 03	3.717E 03	3.717E 03	3.717E 03	3.717E 03	3.717E 03

ORR FUEL SOURCE, 22.5 MW 156 DAY BETA POWER AFTER SHUTDOWN - MW
3510.0 MWD IN 156.0 DAYS.

AT. NO. 30 ZN

ISOTOPE

	SHUTDOWN	120.0 DAYS	215.0 DAYS	310.0 DAYS	1.1 YRS.	1.4 YRS.	1.6 YRS.	1.9 YRS.	2.2 YRS.	2.4 YRS.
ZN 72	8.455E-09	1.923E-27	0.	0.	0.	0.	0.	0.	0.	0.
ZN 73	1.354E-07	0.	0.	0.	0.	0.	0.	0.	0.	0.
TOTAL	1.438E-07	1.923E-27	0.	0.	0.	0.	0.	0.	0.	0.

GAMMA POWER AFTER SHUTDOWN - MW

ZN 72	8.702E-08	1.980E-26	0.	0.	0.	0.	0.	0.	0.	0.
ZN 73	0.	0.	0.	0.	0.	0.	0.	0.	0.	0.
TOTAL	8.702E-08	1.980E-26	0.	0.	0.	0.	0.	0.	0.	0.

ORR FUEL SOURCE, 22.5 MW 156 DAY BETA POWER AFTER SHUTDOWN - MW
3510.0 MWD IN 156.0 DAYS.

AT. NO. 31 GA

ISOTOPE

	SHUTDOWN	120.0 DAYS	215.0 DAYS	310.0 DAYS	1.1 YRS.	1.4 YRS.	1.6 YRS.	1.9 YRS.	2.2 YRS.	2.4 YRS.
GA 72	3.021E-08	9.891E-27	0.	0.	0.	0.	0.	0.	0.	0.
GA 73	2.581E-08	0.	0.	0.	0.	0.	0.	0.	0.	0.
GA 74	2.170E-07	0.	0.	0.	0.	0.	0.	0.	0.	0.
GA 75	3.512E-07	0.	0.	0.	0.	0.	0.	0.	0.	0.
GA 76	1.682E-06	0.	0.	0.	0.	0.	0.	0.	0.	0.
TOTAL	2.306E-06	9.891E-27	0.	0.	0.	0.	0.	0.	0.	0.

GAMMA POWER AFTER SHUTDOWN - MW

GA 72	2.015E-07	6.599E-26	0.	0.	0.	0.	0.	0.	0.	0.
GA 73	2.514E-08	0.	0.	0.	0.	0.	0.	0.	0.	0.
GA 74	6.767E-07	0.	0.	0.	0.	0.	0.	0.	0.	0.
GA 75	1.424E-07	0.	0.	0.	0.	0.	0.	0.	0.	0.
GA 76	6.139E-07	0.	0.	0.	0.	0.	0.	0.	0.	0.
TOTAL	1.660E-06	6.599E-26	0.	0.	0.	0.	0.	0.	0.	0.

```
 ORR   FUEL SOURCE, 22.5 MW 156  DAY  BETA POWER AFTER SHUTDOWN - MW
3510.0 MWD IN  156.0 DAYS.
□
AT. NO. 32 GE

 ISOTOPE
□              SHUTDOWN 120.0 DAYS 215.0 DAYS 310.0 DAYS   1.1 YRS.   1.4 YRS.
1.6 YRS.   1.9 YRS.   2.2 YRS.   2.4 YRS.
  GE  72    0.         0.         0.         0.         0.         0.
0.         0.         0.         0.
  GE  73    0.         0.         0.         0.         0.         0.
0.         0.         0.         0.
  GE  74    0.         0.         0.         0.         0.         0.
0.         0.         0.         0.
  GE* 75    0.         0.         0.         0.         0.         0.
0.         0.         0.         0.
  GE  75    2.064E-07  0.         0.         0.         0.         0.
0.         0.         0.         0.
  GE  76    0.         0.         0.         0.         0.         0.
0.         0.         0.         0.
  GE* 77    2.553E-06  0.         0.         0.         0.         0.
0.         0.         0.         0.
  GE  77    2.224E-06  0.         0.         0.         0.         0.
0.         0.         0.         0.
  GE  78    3.538E-06  0.         0.         0.         0.         0.
0.         0.         0.         0.
  TOTAL     8.521E-06  0.         0.         0.         0.         0.
0.         0.         0.         0.

                                        GAMMA POWER AFTER SHUTDOWN - MW
  GE  72    0.         0.         0.         0.         0.         0.
0.         0.         0.         0.
  GE  73    0.         0.         0.         0.         0.         0.
0.         0.         0.         0.
  GE  74    0.         0.         0.         0.         0.         0.
0.         0.         0.         0.
  GE* 75    3.414E-08  0.         0.         0.         0.         0.
0.         0.         0.         0.
  GE  75    1.868E-08  0.         0.         0.         0.         0.
0.         0.         0.         0.
  GE  76    0.         0.         0.         0.         0.         0.
0.         0.         0.         0.
  GE* 77    3.183E-07  0.         0.         0.         0.         0.
0.         0.         0.         0.
  GE  77    3.940E-06  0.         0.         0.         0.         0.
0.         0.         0.         0.
  GE  78    3.316E-06  0.         0.         0.         0.         0.
0.         0.         0.         0.
  TOTAL     7.628E-06  0.         0.         0.         0.         0.
0.         0.         0.         0.


 ORR   FUEL SOURCE, 22.5 MW 156  DAY  BETA POWER AFTER SHUTDOWN - MW
3510.0 MWD IN  156.0 DAYS.
=
AT. NO. 33 AS
```

```
 ISOTOPE
                SHUTDOWN 120.0 DAYS 215.0 DAYS 310.0 DAYS   1.1 YRS.   1.4 YRS.
1.6 YRS.   1.9 YRS.   2.2 YRS.   2.4 YRS.
  AS  75    0.         0.         0.         0.         0.         0.
0.         0.         0.         0.
  AS  76    2.907E-09  0.         0.         0.         0.         0.
0.         0.         0.         0.
  AS  77    1.243E-06  9.078E-29  0.         0.         0.         0.
0.         0.         0.         0.
  AS  78    1.806E-05  0.         0.         0.         0.         0.
0.         0.         0.         0.
  AS  79    2.210E-05  0.         0.         0.         0.         0.
0.         0.         0.         0.
  AS  80    1.341E-04  0.         0.         0.         0.         0.
0.         0.         0.         0.
  AS  81    1.274E-04  0.         0.         0.         0.         0.
0.         0.         0.         0.
  AS  85    5.147E-04  0.         0.         0.         0.         0.
0.         0.         0.         0.
  TOTAL     8.175E-04  9.078E-29  0.         0.         0.         0.
0.         0.         0.         0.

                                        GAMMA POWER AFTER SHUTDOWN - MW
  AS  75    0.         0.         0.         0.         0.         0.
0.         0.         0.         0.
  AS  76    1.078E-09  0.         0.         0.         0.         0.
0.         0.         0.         0.
  AS  77    1.243E-07  9.078E-30  0.         0.         0.         0.
0.         0.         0.         0.
  AS  78    1.091E-05  0.         0.         0.         0.         0.
0.         0.         0.         0.
  AS  79    0.         0.         0.         0.         0.         0.
0.         0.         0.         0.
  AS  80    2.456E-05  0.         0.         0.         0.         0.
0.         0.         0.         0.
  AS  81    0.         0.         0.         0.         0.         0.
0.         0.         0.         0.
  AS  85    2.010E-03  0.         0.         0.         0.         0.
0.         0.         0.         0.
  TOTAL     2.046E-03  9.078E-30  0.         0.         0.         0.
0.         0.         0.         0.


 ORR   FUEL SOURCE, 22.5 MW 156  DAY  BETA POWER AFTER SHUTDOWN - MW
3510.0 MWD IN  156.0 DAYS.

AT. NO. 34 SE

 ISOTOPE
                SHUTDOWN 120.0 DAYS 215.0 DAYS 310.0 DAYS   1.1 YRS.   1.4 YRS.
1.6 YRS.   1.9 YRS.   2.2 YRS.   2.4 YRS.
  SE  76    0.         0.         0.         0.         0.         0.
0.         0.         0.         0.
  SE* 77    0.         0.         0.         0.         0.         0.
0.         0.         0.         0.
  SE  77    0.         0.         0.         0.         0.         0.
0.         0.         0.         0.
  SE  78    0.         0.         0.         0.         0.         0.
0.         0.         0.         0.
```

SE* 79	0.	0.	0.	0.	0.	0.	0.	0.	0.	0.
SE 79	5.714E-12	5.715E-12	5.715E-12	5.715E-12	5.715E-12	5.715E-12	5.715E-12	5.715E-12	5.715E-12	5.715E-12
SE 80	0.	0.	0.	0.	0.	0.	0.	0.	0.	0.
SE* 81	0.	0.	0.	0.	0.	0.	0.	0.	0.	0.
SE 81	4.343E-05	0.	0.	0.	0.	0.	0.	0.	0.	0.
SE 82	0.	0.	0.	0.	0.	0.	0.	0.	0.	0.
SE* 83	3.806E-04	0.	0.	0.	0.	0.	0.	0.	0.	0.
SE 83	1.066E-04	0.	0.	0.	0.	0.	0.	0.	0.	0.
SE 84	2.586E-05	0.	0.	0.	0.	0.	0.	0.	0.	0.
SE 85	1.801E-03	0.	0.	0.	0.	0.	0.	0.	0.	0.
SE 86	1.433E-03	0.	0.	0.	0.	0.	0.	0.	0.	0.
SE 87	7.937E-03	0.	0.	0.	0.	0.	0.	0.	0.	0.
TOTAL	1.173E-02	5.715E-12	5.715E-12	5.715E-12	5.715E-12	5.715E-12	5.715E-12	5.715E-12	5.715E-12	5.715E-12

GAMMA POWER AFTER SHUTDOWN - MW

SE 76	0.	0.	0.	0.	0.	0.	0.	0.	0.	0.
SE* 77	4.418E-12	0.	0.	0.	0.	0.	0.	0.	0.	0.
SE 77	0.	0.	0.	0.	0.	0.	0.	0.	0.	0.
SE 78	0.	0.	0.	0.	0.	0.	0.	0.	0.	0.
SE* 79	2.358E-06	0.	0.	0.	0.	0.	0.	0.	0.	0.
SE 79	0.	0.	0.	0.	0.	0.	0.	0.	0.	0.
SE 80	0.	0.	0.	0.	0.	0.	0.	0.	0.	0.
SE* 81	5.320E-07	0.	0.	0.	0.	0.	0.	0.	0.	0.
SE 81	0.	0.	0.	0.	0.	0.	0.	0.	0.	0.
SE 82	0.	0.	0.	0.	0.	0.	0.	0.	0.	0.
SE* 83	4.910E-05	0.	0.	0.	0.	0.	0.	0.	0.	0.
SE 83	1.545E-04	0.	0.	0.	0.	0.	0.	0.	0.	0.
SE 84	0.	0.	0.	0.	0.	0.	0.	0.	0.	0.
SE 85	0.	0.	0.	0.	0.	0.	0.	0.	0.	0.
SE 86	0.	0.	0.	0.	0.	0.	0.	0.	0.	0.
SE 87	0.	0.	0.	0.	0.	0.	0.	0.	0.	0.

```
  TOTAL      2.065E-04  0.          0.          0.          0.          0.
0.          0.          0.          0.


 ORR   FUEL SOURCE, 22.5 MW 156  DAY  BETA POWER AFTER SHUTDOWN - MW
3510.0 MWD IN  156.0 DAYS.

AT. NO. 35 BR

 ISOTOPE
                SHUTDOWN 120.0 DAYS 215.0 DAYS 310.0 DAYS   1.1 YRS.   1.4 YRS.
1.6 YRS.   1.9 YRS.   2.2 YRS.   2.4 YRS.
  BR  79    0.          0.          0.          0.          0.          0.
0.          0.          0.          0.
  BR* 80    0.          0.          0.          0.          0.          0.
0.          0.          0.          0.
  BR  80    5.694E-13  0.          0.          0.          0.          0.
0.          0.          0.          0.
  BR  81    0.          0.          0.          0.          0.          0.
0.          0.          0.          0.
  BR  82    4.145E-08  1.137E-32  0.          0.          0.          0.
0.          0.          0.          0.
  BR  83    1.506E-04  0.          0.          0.          0.          0.
0.          0.          0.          0.
  BR* 84    1.191E-05  0.          0.          0.          0.          0.
0.          0.          0.          0.
  BR  84    1.030E-03  0.          0.          0.          0.          0.
0.          0.          0.          0.
  BR  85    1.177E-03  0.          0.          0.          0.          0.
0.          0.          0.          0.
  BR  86    5.260E-03  0.          0.          0.          0.          0.
0.          0.          0.          0.
  BR  87    3.979E-03  0.          0.          0.          0.          0.
0.          0.          0.          0.
  BR  88    7.543E-03  0.          0.          0.          0.          0.
0.          0.          0.          0.
  BR  89    4.757E-04  0.          0.          0.          0.          0.
0.          0.          0.          0.
  BR  90    6.292E-03  0.          0.          0.          0.          0.
0.          0.          0.          0.
  TOTAL     2.592E-02  1.137E-32  0.          0.          0.          0.
0.          0.          0.          0.

                                        GAMMA POWER AFTER SHUTDOWN - MW
  BR  79    0.          0.          0.          0.          0.          0.
0.          0.          0.          0.
  BR* 80    1.704E-14  0.          0.          0.          0.          0.
0.          0.          0.          0.
  BR  80    9.174E-14  0.          0.          0.          0.          0.
0.          0.          0.          0.
  BR  81    0.          0.          0.          0.          0.          0.
0.          0.          0.          0.
  BR  82    7.841E-07  2.151E-31  0.          0.          0.          0.
0.          0.          0.          0.
  BR  83    4.430E-06  0.          0.          0.          0.          0.
0.          0.          0.          0.
  BR* 84    5.697E-05  0.          0.          0.          0.          0.
0.          0.          0.          0.
  BR  84    1.560E-03  0.          0.          0.          0.          0.
0.          0.          0.          0.
```

```
  BR  85    0.          0.          0.          0.          0.          0.
0.          0.          0.          0.
  BR  86    1.466E-03   0.          0.          0.          0.          0.
0.          0.          0.          0.
  BR  87    8.043E-03   0.          0.          0.          0.          0.
0.          0.          0.          0.
  BR  88    8.199E-05   0.          0.          0.          0.          0.
0.          0.          0.          0.
  BR  89    1.189E-05   0.          0.          0.          0.          0.
0.          0.          0.          0.
  BR  90    1.573E-04   0.          0.          0.          0.          0.
0.          0.          0.          0.
  TOTAL     1.138E-02   2.151E-31   0.          0.          0.          0.
0.          0.          0.          0.


 ORR   FUEL SOURCE, 22.5 MW 156  DAY  BETA POWER AFTER SHUTDOWN - MW
3510.0 MWD IN  156.0 DAYS.
-
AT. NO. 36 KR

 ISOTOPE
-              SHUTDOWN 120.0 DAYS 215.0 DAYS 310.0 DAYS   1.1 YRS.   1.4 YRS.
1.6 YRS.   1.9 YRS.   2.2 YRS.   2.4 YRS.
  KR  80    0.          0.          0.          0.          0.          0.
0.          0.          0.          0.
  KR  81    0.          0.          0.          0.          0.          0.
0.          0.          0.          0.
  KR  82    0.          0.          0.          0.          0.          0.
0.          0.          0.          0.
  KR* 83    0.          0.          0.          0.          0.          0.
0.          0.          0.          0.
  KR  83    0.          0.          0.          0.          0.          0.
0.          0.          0.          0.
  KR  84    0.          0.          0.          0.          0.          0.
0.          0.          0.          0.
  KR* 85    3.284E-04   0.          0.          0.          0.          0.
0.          0.          0.          0.
  KR  85    2.008E-06   1.969E-06   1.936E-06   1.904E-06   1.872E-06   1.841E-06
1.810E-06   1.780E-06   1.751E-06   1.722E-06
  KR  86    0.          0.          0.          0.          0.          0.
0.          0.          0.          0.
  KR  87    2.851E-03   0.          0.          0.          0.          0.
0.          0.          0.          0.
  KR  88    1.140E-03   0.          0.          0.          0.          0.
0.          0.          0.          0.
  KR  89    5.141E-03   0.          0.          0.          0.          0.
0.          0.          0.          0.
  KR  90    5.746E-03   0.          0.          0.          0.          0.
0.          0.          0.          0.
  KR  91    4.548E-03   0.          0.          0.          0.          0.
0.          0.          0.          0.
  KR  92    6.660E-03   0.          0.          0.          0.          0.
0.          0.          0.          0.
  KR  93    4.552E-03   0.          0.          0.          0.          0.
0.          0.          0.          0.
  KR  94    1.823E-03   0.          0.          0.          0.          0.
0.          0.          0.          0.
  KR  95    1.575E-02   0.          0.          0.          0.          0.
0.          0.          0.          0.
```

```
  KR  97    1.093E-02  0.         0.         0.         0.         0.
0.         0.         0.         0.
  TOTAL     5.948E-02  1.969E-06  1.936E-06  1.904E-06  1.872E-06  1.841E-06
1.810E-06  1.780E-06  1.751E-06  1.722E-06

                                        GAMMA POWER AFTER SHUTDOWN - MW
  KR  80    0.         0.         0.         0.         0.         0.
0.         0.         0.         0.
  KR  81    0.         0.         0.         0.         0.         0.
0.         0.         0.         0.
  KR  82    0.         0.         0.         0.         0.         0.
0.         0.         0.         0.
  KR* 83    1.817E-05  0.         0.         0.         0.         0.
0.         0.         0.         0.
  KR  83    0.         0.         0.         0.         0.         0.
0.         0.         0.         0.
  KR  84    0.         0.         0.         0.         0.         0.
0.         0.         0.         0.
  KR* 85    2.027E-04  0.         0.         0.         0.         0.
0.         0.         0.         0.
  KR  85    3.213E-08  3.150E-08  3.098E-08  3.046E-08  2.996E-08  2.946E-08
2.897E-08  2.849E-08  2.801E-08  2.755E-08
  KR  86    0.         0.         0.         0.         0.         0.
0.         0.         0.         0.
  KR  87    2.317E-03  0.         0.         0.         0.         0.
0.         0.         0.         0.
  KR  88    5.764E-03  0.         0.         0.         0.         0.
0.         0.         0.         0.
  KR  89    8.376E-03  0.         0.         0.         0.         0.
0.         0.         0.         0.
  KR  90    9.353E-03  0.         0.         0.         0.         0.
0.         0.         0.         0.
  KR  91    5.831E-03  0.         0.         0.         0.         0.
0.         0.         0.         0.
  KR  92    0.         0.         0.         0.         0.         0.
0.         0.         0.         0.
  KR  93    0.         0.         0.         0.         0.         0.
0.         0.         0.         0.
  KR  94    0.         0.         0.         0.         0.         0.
0.         0.         0.         0.
  KR  95    0.         0.         0.         0.         0.         0.
0.         0.         0.         0.
  KR  97    0.         0.         0.         0.         0.         0.
0.         0.         0.         0.
  TOTAL     3.186E-02  3.150E-08  3.098E-08  3.046E-08  2.996E-08  2.946E-08
2.897E-08  2.849E-08  2.801E-08  2.755E-08


 ORR   FUEL SOURCE, 22.5 MW 156  DAY  BETA POWER AFTER SHUTDOWN - MW
3510.0 MWD IN  156.0 DAYS.

AT. NO. 37 RB

 ISOTOPE
                SHUTDOWN 120.0 DAYS 215.0 DAYS 310.0 DAYS   1.1 YRS.   1.4 YRS.
1.6 YRS.   1.9 YRS.   2.2 YRS.   2.4 YRS.
  RB  85    0.         0.         0.         0.         0.         0.
0.         0.         0.         0.
  RB* 86    0.         0.         0.         0.         0.         0.
0.         0.         0.         0.
```

RB	86	5.761E-07	6.737E-09	1.990E-10	5.902E-12	1.743E-13	5.149E-15	1.521E-16	4.491E-18	1.332E-19	3.935E-21
RB	87	0.	0.	0.	0.	0.	0.	0.	0.	0.	0.
RB	88	5.969E-03	0.	0.	0.	0.	0.	0.	0.	0.	0.
RB	89	2.293E-03	0.	0.	0.	0.	0.	0.	0.	0.	0.
RB	90	9.783E-03	0.	0.	0.	0.	0.	0.	0.	0.	0.
RB*	91	2.053E-03	0.	0.	0.	0.	0.	0.	0.	0.	0.
RB	91	6.626E-03	0.	0.	0.	0.	0.	0.	0.	0.	0.
RB	92	1.469E-02	0.	0.	0.	0.	0.	0.	0.	0.	0.
RB	93	1.139E-02	0.	0.	0.	0.	0.	0.	0.	0.	0.
RB	94	1.304E-02	0.	0.	0.	0.	0.	0.	0.	0.	0.
RB	95	2.468E-02	0.	0.	0.	0.	0.	0.	0.	0.	0.
RB	97	2.286E-02	0.	0.	0.	0.	0.	0.	0.	0.	0.
TOTAL		1.134E-01	6.737E-09	1.990E-10	5.902E-12	1.743E-13	5.149E-15	1.521E-16	4.491E-18	1.332E-19	3.935E-21

GAMMA POWER AFTER SHUTDOWN - MW

RB	85	0.	0.	0.	0.	0.	0.	0.	0.	0.	0.
RB*	86	5.568E-08	0.	0.	0.	0.	0.	0.	0.	0.	0.
RB	86	8.468E-08	9.901E-10	2.924E-11	8.674E-13	2.562E-14	7.567E-16	2.235E-17	6.601E-19	1.958E-20	5.783E-22
RB	87	0.	0.	0.	0.	0.	0.	0.	0.	0.	0.
RB	88	2.243E-03	0.	0.	0.	0.	0.	0.	0.	0.	0.
RB	89	9.381E-03	0.	0.	0.	0.	0.	0.	0.	0.	0.
RB	90	1.981E-02	0.	0.	0.	0.	0.	0.	0.	0.	0.
RB*	91	4.526E-03	0.	0.	0.	0.	0.	0.	0.	0.	0.
RB	91	1.299E-03	0.	0.	0.	0.	0.	0.	0.	0.	0.
RB	92	0.	0.	0.	0.	0.	0.	0.	0.	0.	0.
RB	93	0.	0.	0.	0.	0.	0.	0.	0.	0.	0.
RB	94	0.	0.	0.	0.	0.	0.	0.	0.	0.	0.
RB	95	0.	0.	0.	0.	0.	0.	0.	0.	0.	0.
RB	97	0.	0.	0.	0.	0.	0.	0.	0.	0.	0.
TOTAL		3.725E-02	9.901E-10	2.924E-11	8.674E-13	2.562E-14	7.567E-16	2.235E-17	6.601E-19	1.958E-20	5.783E-22

ORR FUEL SOURCE, 22.5 MW 156 DAY BETA POWER AFTER SHUTDOWN - MW
3510.0 MWD IN 156.0 DAYS.

AT. NO. 38 SR

ISOTOPE

	SHUTDOWN	120.0 DAYS	215.0 DAYS	310.0 DAYS	1.1 YRS.	1.4 YRS.	1.6 YRS.	1.9 YRS.	2.2 YRS.	2.4 YRS.
SR 86	0.	0.	0.	0.	0.	0.	0.	0.	0.	0.
SR* 87	0.	0.	0.	0.	0.	0.	0.	0.	0.	0.
SR 87	0.	0.	0.	0.	0.	0.	0.	0.	0.	0.
SR 88	0.	0.	0.	0.	0.	0.	0.	0.	0.	0.
SR 89	2.173E-03	4.389E-04	1.237E-04	3.490E-05	9.835E-06	2.771E-06	7.809E-07	2.200E-07	6.210E-08	1.750E-08
SR 90	1.180E-05	1.171E-05	1.163E-05	1.156E-05	1.148E-05	1.141E-05	1.134E-05	1.126E-05	1.119E-05	1.112E-05
SR 91	3.071E-03	0.	0.	0.	0.	0.	0.	0.	0.	0.
SR 92	1.209E-02	0.	0.	0.	0.	0.	0.	0.	0.	0.
SR 93	8.299E-03	0.	0.	0.	0.	0.	0.	0.	0.	0.
SR 94	7.990E-03	0.	0.	0.	0.	0.	0.	0.	0.	0.
SR 95	1.875E-02	0.	0.	0.	0.	0.	0.	0.	0.	0.
SR 97	1.859E-02	0.	0.	0.	0.	0.	0.	0.	0.	0.
TOTAL	7.098E-02	4.506E-04	1.353E-04	4.646E-05	2.132E-05	1.418E-05	1.212E-05	1.148E-05	1.125E-05	1.114E-05

GAMMA POWER AFTER SHUTDOWN - MW

SR 86	0.	0.	0.	0.	0.	0.	0.	0.	0.	0.
SR* 87	8.401E-13	0.	0.	0.	0.	0.	0.	0.	0.	0.
SR 87	0.	0.	0.	0.	0.	0.	0.	0.	0.	0.
SR 88	0.	0.	0.	0.	0.	0.	0.	0.	0.	0.
SR 89	7.493E-07	1.513E-07	4.265E-08	1.204E-08	3.391E-09	9.556E-10	2.693E-10	7.588E-11	2.141E-11	6.034E-12
SR 90	0.	0.	0.	0.	0.	0.	0.	0.	0.	0.
SR 91	3.617E-03	0.	0.	0.	0.	0.	0.	0.	0.	0.
SR 92	6.817E-03	0.	0.	0.	0.	0.	0.	0.	0.	0.
SR 93	5.928E-03	0.	0.	0.	0.	0.	0.	0.	0.	0.
SR 94	0.	0.	0.	0.	0.	0.	0.	0.	0.	0.
SR 95	0.	0.	0.	0.	0.	0.	0.	0.	0.	0.
SR 97	0.	0.	0.	0.	0.	0.	0.	0.	0.	0.

```
  TOTAL      1.636E-02  1.513E-07  4.265E-08  1.204E-08  3.391E-09  9.556E-10
2.693E-10  7.588E-11  2.141E-11  6.034E-12


 ORR   FUEL SOURCE, 22.5 MW 156  DAY  BETA POWER AFTER SHUTDOWN - MW
3510.0 MWD IN  156.0 DAYS.

AT. NO. 39  Y

 ISOTOPE
              SHUTDOWN 120.0 DAYS 215.0 DAYS 310.0 DAYS   1.1 YRS.   1.4 YRS.
1.6 YRS.   1.9 YRS.   2.2 YRS.   2.4 YRS.
   Y* 89    0.         0.         0.         0.         0.         0.
0.         0.         0.         0.
  Y   89    0.         0.         0.         0.         0.         0.
0.         0.         0.         0.
  Y*  90    0.         0.         0.         0.         0.         0.
0.         0.         0.         0.
  Y   90    5.717E-05  5.504E-05  5.469E-05  5.434E-05  5.399E-05  5.364E-05
5.330E-05  5.295E-05  5.262E-05  5.228E-05
  Y*  91    0.         0.         0.         0.         0.         0.
0.         0.         0.         0.
  Y   91    2.777E-03  6.832E-04  2.237E-04  7.336E-05  2.402E-05  7.867E-06
2.576E-06  8.437E-07  2.767E-07  9.060E-08
  Y   92    7.712E-03  0.         0.         0.         0.         0.
0.         0.         0.         0.
  Y   93    7.108E-03  0.         0.         0.         0.         0.
0.         0.         0.         0.
  Y   94    1.401E-02  0.         0.         0.         0.         0.
0.         0.         0.         0.
  Y   95    1.441E-02  0.         0.         0.         0.         0.
0.         0.         0.         0.
  Y   96    5.093E-03  0.         0.         0.         0.         0.
0.         0.         0.         0.
  Y   97    1.203E-02  0.         0.         0.         0.         0.
0.         0.         0.         0.
  TOTAL     6.319E-02  7.382E-04  2.784E-04  1.277E-04  7.801E-05  6.151E-05
5.587E-05  5.380E-05  5.289E-05  5.237E-05

                                        GAMMA POWER AFTER SHUTDOWN - MW
   Y* 89    6.856E-07  1.385E-07  3.902E-08  1.101E-08  3.103E-09  8.744E-10
2.464E-10  6.943E-11  1.959E-11  5.521E-12
  Y   89    0.         0.         0.         0.         0.         0.
0.         0.         0.         0.
  Y*  90    1.709E-09  0.         0.         0.         0.         0.
0.         0.         0.         0.
  Y   90    1.824E-08  1.757E-08  1.745E-08  1.734E-08  1.723E-08  1.712E-08
1.701E-08  1.690E-08  1.679E-08  1.668E-08
  Y*  91    1.585E-03  0.         0.         0.         0.         0.
0.         0.         0.         0.
  Y   91    1.821E-05  4.480E-06  1.467E-06  4.811E-07  1.575E-07  5.159E-08
1.689E-08  5.532E-09  1.814E-09  5.941E-10
  Y   92    1.425E-03  0.         0.         0.         0.         0.
0.         0.         0.         0.
  Y   93    6.144E-04  0.         0.         0.         0.         0.
0.         0.         0.         0.
  Y   94    6.281E-03  0.         0.         0.         0.         0.
0.         0.         0.         0.
  Y   95    0.         0.         0.         0.         0.         0.
0.         0.         0.         0.
```

```
  Y    96    5.586E-03  0.         0.         0.         0.         0.
0.         0.         0.         0.
  Y    97    0.         0.         0.         0.         0.         0.
0.         0.         0.         0.
  TOTAL      1.551E-02  4.636E-06  1.523E-06  5.094E-07  1.779E-07  6.958E-08
3.415E-08  2.250E-08  1.863E-08  1.728E-08


 ORR   FUEL SOURCE, 22.5 MW 156  DAY  BETA POWER AFTER SHUTDOWN - MW
3510.0 MWD IN  156.0 DAYS.
-
AT. NO. 40 ZR

 ISOTOPE
-              SHUTDOWN 120.0 DAYS 215.0 DAYS 310.0 DAYS   1.1 YRS.   1.4 YRS.
1.6 YRS.   1.9 YRS.   2.2 YRS.   2.4 YRS.
  ZR   90    0.         0.         0.         0.         0.         0.
0.         0.         0.         0.
  ZR   91    0.         0.         0.         0.         0.         0.
0.         0.         0.         0.
  ZR   92    0.         0.         0.         0.         0.         0.
0.         0.         0.         0.
  ZR   93    3.071E-11  3.082E-11  3.082E-11  3.082E-11  3.082E-11  3.082E-11
3.082E-11  3.082E-11  3.082E-11  3.082E-11
  ZR   94    0.         0.         0.         0.         0.         0.
0.         0.         0.         0.
  ZR   95    6.801E-04  1.891E-04  6.866E-05  2.496E-05  9.060E-06  3.289E-06
1.194E-06  4.334E-07  1.575E-07  5.719E-08
  ZR   96    0.         0.         0.         0.         0.         0.
0.         0.         0.         0.
  ZR   97    4.687E-03  0.         0.         0.         0.         0.
0.         0.         0.         0.
  ZR   98    3.461E-04  0.         0.         0.         0.         0.
0.         0.         0.         0.
  ZR   99    5.319E-03  0.         0.         0.         0.         0.
0.         0.         0.         0.
  TOTAL      1.103E-02  1.891E-04  6.866E-05  2.496E-05  9.060E-06  3.289E-06
1.194E-06  4.334E-07  1.576E-07  5.722E-08

                                        GAMMA POWER AFTER SHUTDOWN - MW
  ZR   90    0.         0.         0.         0.         0.         0.
0.         0.         0.         0.
  ZR   91    0.         0.         0.         0.         0.         0.
0.         0.         0.         0.
  ZR   92    0.         0.         0.         0.         0.         0.
0.         0.         0.         0.
  ZR   93    0.         0.         0.         0.         0.         0.
0.         0.         0.         0.
  ZR   94    0.         0.         0.         0.         0.         0.
0.         0.         0.         0.
  ZR   95    4.126E-03  1.147E-03  4.166E-04  1.514E-04  5.496E-05  1.995E-05
7.243E-06  2.629E-06  9.557E-07  3.469E-07
  ZR   96    0.         0.         0.         0.         0.         0.
0.         0.         0.         0.
  ZR   97    1.480E-03  0.         0.         0.         0.         0.
0.         0.         0.         0.
  ZR   98    0.         0.         0.         0.         0.         0.
0.         0.         0.         0.
  ZR   99    0.         0.         0.         0.         0.         0.
0.         0.         0.         0.
```

```
  TOTAL      5.606E-03  1.147E-03  4.166E-04  1.514E-04  5.496E-05  1.995E-05
7.243E-06  2.629E-06  9.557E-07  3.469E-07


 ORR   FUEL SOURCE, 22.5 MW 156  DAY  BETA POWER AFTER SHUTDOWN - MW
3510.0 MWD IN  156.0 DAYS.

AT. NO. 41 NB

 ISOTOPE
                SHUTDOWN 120.0 DAYS 215.0 DAYS 310.0 DAYS   1.1 YRS.   1.4 YRS.
1.6 YRS.   1.9 YRS.   2.2 YRS.   2.4 YRS.
  NB* 93    0.         0.         0.         0.         0.         0.
0.         0.         0.         0.
  NB  93    0.         0.         0.         0.         0.         0.
0.         0.         0.         0.
  NB* 94    3.532E-16  0.         0.         0.         0.         0.
0.         0.         0.         0.
  NB  94    6.178E-19  6.179E-19  6.179E-19  6.179E-19  6.179E-19  6.179E-19
6.179E-19  6.179E-19  6.179E-19  6.179E-19
  NB* 95    0.         0.         0.         0.         0.         0.
0.         0.         0.         0.
  NB  95    1.941E-04  1.160E-04  4.864E-05  1.868E-05  6.932E-06  2.540E-06
9.255E-07  3.365E-07  1.224E-07  4.445E-08
  NB  96    2.461E-06  0.         0.         0.         0.         0.
0.         0.         0.         0.
  NB* 97    0.         0.         0.         0.         0.         0.
0.         0.         0.         0.
  NB  97    3.147E-03  0.         0.         0.         0.         0.
0.         0.         0.         0.
  NB* 98    1.184E-04  0.         0.         0.         0.         0.
0.         0.         0.         0.
  NB  98    4.372E-03  0.         0.         0.         0.         0.
0.         0.         0.         0.
  NB  99    9.334E-03  0.         0.         0.         0.         0.
0.         0.         0.         0.
  NB 100    2.541E-02  0.         0.         0.         0.         0.
0.         0.         0.         0.
  NB 101    3.134E-03  0.         0.         0.         0.         0.
0.         0.         0.         0.
  TOTAL     4.572E-02  1.160E-04  4.864E-05  1.868E-05  6.932E-06  2.540E-06
9.255E-07  3.365E-07  1.224E-07  4.445E-08

                                        GAMMA POWER AFTER SHUTDOWN - MW
  NB* 93    5.950E-13  1.449E-12  2.089E-12  2.698E-12  3.278E-12  3.831E-12
4.358E-12  4.859E-12  5.336E-12  5.791E-12
  NB  93    0.         0.         0.         0.         0.         0.
0.         0.         0.         0.
  NB* 94    2.967E-14  0.         0.         0.         0.         0.
0.         0.         0.         0.
  NB  94    6.063E-18  6.063E-18  6.063E-18  6.063E-18  6.063E-18  6.063E-18
6.063E-18  6.063E-18  6.063E-18  6.063E-18
  NB* 95    2.628E-05  7.862E-06  2.854E-06  1.037E-06  3.766E-07  1.367E-07
4.962E-08  1.801E-08  6.548E-09  2.377E-09
  NB  95    3.431E-03  2.049E-03  8.597E-04  3.301E-04  1.225E-04  4.489E-05
1.636E-05  5.948E-06  2.163E-06  7.855E-07
  NB  96    2.747E-05  0.         0.         0.         0.         0.
0.         0.         0.         0.
  NB* 97    4.520E-03  0.         0.         0.         0.         0.
0.         0.         0.         0.
```

```
  NB  97    4.506E-03  0.         0.         0.         0.         0.
0.         0.         0.         0.
  NB* 98    1.808E-04  0.         0.         0.         0.         0.
0.         0.         0.         0.
  NB  98    4.164E-03  0.         0.         0.         0.         0.
0.         0.         0.         0.
  NB  99    1.784E-03  0.         0.         0.         0.         0.
0.         0.         0.         0.
  NB 100    7.872E-03  0.         0.         0.         0.         0.
0.         0.         0.         0.
  NB 101    0.         0.         0.         0.         0.         0.
0.         0.         0.         0.
  TOTAL     2.651E-02  2.057E-03  8.626E-04  3.311E-04  1.229E-04  4.503E-05
1.641E-05  5.966E-06  2.170E-06  7.879E-07


 ORR   FUEL SOURCE, 22.5 MW 156  DAY  BETA POWER AFTER SHUTDOWN - MW
3510.0 MWD IN  156.0 DAYS.
-
AT. NO. 42 MO

 ISOTOPE
-              SHUTDOWN 120.0 DAYS 215.0 DAYS 310.0 DAYS   1.1 YRS.   1.4 YRS.
1.6 YRS.   1.9 YRS.   2.2 YRS.   2.4 YRS.
  MO  94    0.         0.         0.         0.         0.         0.
0.         0.         0.         0.
  MO  95    0.         0.         0.         0.         0.         0.
0.         0.         0.         0.
  MO  96    0.         0.         0.         0.         0.         0.
0.         0.         0.         0.
  MO  97    0.         0.         0.         0.         0.         0.
0.         0.         0.         0.
  MO  98    0.         0.         0.         0.         0.         0.
0.         0.         0.         0.
  MO  99    2.814E-03  2.048E-16  8.123E-27  3.317E-37  0.         0.
0.         0.         0.         0.
  MO 100    0.         0.         0.         0.         0.         0.
0.         0.         0.         0.
  MO 101    2.556E-03  0.         0.         0.         0.         0.
0.         0.         0.         0.
  MO 102    2.482E-03  0.         0.         0.         0.         0.
0.         0.         0.         0.
  MO 104    4.467E-03  0.         0.         0.         0.         0.
0.         0.         0.         0.
  MO 105    4.311E-03  0.         0.         0.         0.         0.
0.         0.         0.         0.
  TOTAL     1.663E-02  2.048E-16  8.123E-27  3.317E-37  0.         0.
0.         0.         0.         0.

                                        GAMMA POWER AFTER SHUTDOWN - MW
  MO  94    0.         0.         0.         0.         0.         0.
0.         0.         0.         0.
  MO  95    0.         0.         0.         0.         0.         0.
0.         0.         0.         0.
  MO  96    0.         0.         0.         0.         0.         0.
0.         0.         0.         0.
  MO  97    0.         0.         0.         0.         0.         0.
0.         0.         0.         0.
  MO  98    0.         0.         0.         0.         0.         0.
0.         0.         0.         0.
```

```
  MO  99    8.511E-04  6.195E-17  2.457E-27  1.003E-37  0.         0.
0.         0.         0.         0.
  MO 100    0.         0.         0.         0.         0.         0.
0.         0.         0.         0.
  MO 101    1.004E-02  0.         0.         0.         0.         0.
0.         0.         0.         0.
  MO 102    7.332E-03  0.         0.         0.         0.         0.
0.         0.         0.         0.
  MO 104    4.136E-03  0.         0.         0.         0.         0.
0.         0.         0.         0.
  MO 105    0.         0.         0.         0.         0.         0.
0.         0.         0.         0.
  TOTAL     2.236E-02  6.195E-17  2.457E-27  1.003E-37  0.         0.
0.         0.         0.         0.


 ORR   FUEL SOURCE, 22.5 MW 156  DAY  BETA POWER AFTER SHUTDOWN - MW
3510.0 MWD IN  156.0 DAYS.
□
AT. NO. 43 TC

 ISOTOPE
□              SHUTDOWN 120.0 DAYS 215.0 DAYS 310.0 DAYS   1.1 YRS.   1.4 YRS.
1.6 YRS.   1.9 YRS.   2.2 YRS.   2.4 YRS.
  TC* 99    0.         0.         0.         0.         0.         0.
0.         0.         0.         0.
  TC  99    7.834E-10  8.058E-10  8.058E-10  8.058E-10  8.058E-10  8.058E-10
8.058E-10  8.058E-10  8.058E-10  8.058E-10
  TC 100    1.857E-04  0.         0.         0.         0.         0.
0.         0.         0.         0.
  TC 101    2.861E-03  0.         0.         0.         0.         0.
0.         0.         0.         0.
  TC 102    1.010E-02  0.         0.         0.         0.         0.
0.         0.         0.         0.
  TC 103    2.473E-03  0.         0.         0.         0.         0.
0.         0.         0.         0.
  TC 104    4.053E-03  0.         0.         0.         0.         0.
0.         0.         0.         0.
  TC 105    5.321E-03  0.         0.         0.         0.         0.
0.         0.         0.         0.
  TC 107    0.         0.         0.         0.         0.         0.
0.         0.         0.         0.
  TOTAL     2.499E-02  8.058E-10  8.058E-10  8.058E-10  8.058E-10  8.058E-10
8.058E-10  8.058E-10  8.058E-10  8.058E-10

                                        GAMMA POWER AFTER SHUTDOWN - MW
  TC* 99    8.986E-04  7.194E-17  2.853E-27  1.165E-37  0.         0.
0.         0.         0.         0.
  TC  99    0.         0.         0.         0.         0.         0.
0.         0.         0.         0.
  TC 100    1.470E-05  0.         0.         0.         0.         0.
0.         0.         0.         0.
  TC 101    2.203E-03  0.         0.         0.         0.         0.
0.         0.         0.         0.
  TC 102    0.         0.         0.         0.         0.         0.
0.         0.         0.         0.
  TC 103    0.         0.         0.         0.         0.         0.
0.         0.         0.         0.
  TC 104    1.282E-02  0.         0.         0.         0.         0.
0.         0.         0.         0.
```

```
  TC 105     0.          0.          0.          0.          0.          0.
0.          0.          0.          0.
  TC 107     0.          0.          0.          0.          0.          0.
0.          0.          0.          0.
  TOTAL      1.594E-02  7.194E-17  2.853E-27  1.165E-37  0.          0.
0.          0.          0.          0.


 ORR   FUEL SOURCE, 22.5 MW 156  DAY  BETA POWER AFTER SHUTDOWN - MW
3510.0 MWD IN  156.0 DAYS.
=
AT. NO. 44 RU

 ISOTOPE
=              SHUTDOWN 120.0 DAYS 215.0 DAYS 310.0 DAYS   1.1 YRS.   1.4 YRS.
1.6 YRS.   1.9 YRS.   2.2 YRS.   2.4 YRS.
  RU  99     0.          0.          0.          0.          0.          0.
0.          0.          0.          0.
  RU 100     0.          0.          0.          0.          0.          0.
0.          0.          0.          0.
  RU 101     0.          0.          0.          0.          0.          0.
0.          0.          0.          0.
  RU 102     0.          0.          0.          0.          0.          0.
0.          0.          0.          0.
  RU 103     2.585E-04  3.230E-05  6.224E-06  1.202E-06  2.316E-07  4.463E-08
8.600E-09  1.657E-09  3.200E-10  6.166E-11
  RU 104     0.          0.          0.          0.          0.          0.
0.          0.          0.          0.
  RU 105     1.069E-03  0.          0.          0.          0.          0.
0.          0.          0.          0.
  RU 106     4.251E-06  3.385E-06  2.826E-06  2.360E-06  1.970E-06  1.645E-06
1.373E-06  1.147E-06  9.575E-07  7.994E-07
  RU 107     4.122E-05  0.          0.          0.          0.          0.
0.          0.          0.          0.
  RU 108     6.061E-04  0.          0.          0.          0.          0.
0.          0.          0.          0.
  TOTAL      1.979E-03  3.568E-05  9.050E-06  3.562E-06  2.202E-06  1.690E-06
1.382E-06  1.148E-06  9.578E-07  7.995E-07

                                        GAMMA POWER AFTER SHUTDOWN - MW
  RU  99     0.          0.          0.          0.          0.          0.
0.          0.          0.          0.
  RU 100     0.          0.          0.          0.          0.          0.
0.          0.          0.          0.
  RU 101     0.          0.          0.          0.          0.          0.
0.          0.          0.          0.
  RU 102     0.          0.          0.          0.          0.          0.
0.          0.          0.          0.
  RU 103     2.002E-03  2.502E-04  4.821E-05  9.309E-06  1.794E-06  3.457E-07
6.661E-08  1.284E-08  2.479E-09  4.776E-10
  RU 104     0.          0.          0.          0.          0.          0.
0.          0.          0.          0.
  RU 105     1.955E-03  0.          0.          0.          0.          0.
0.          0.          0.          0.
  RU 106     0.          0.          0.          0.          0.          0.
0.          0.          0.          0.
  RU 107     3.555E-06  0.          0.          0.          0.          0.
0.          0.          0.          0.
  RU 108     6.623E-05  0.          0.          0.          0.          0.
0.          0.          0.          0.
```

```
  TOTAL      4.027E-03  2.502E-04  4.821E-05  9.309E-06  1.794E-06  3.457E-07
6.661E-08  1.284E-08  2.479E-09  4.776E-10


 ORR   FUEL SOURCE, 22.5 MW 156  DAY  BETA POWER AFTER SHUTDOWN - MW
3510.0 MWD IN  156.0 DAYS.

AT. NO. 45 RH

 ISOTOPE
                SHUTDOWN 120.0 DAYS 215.0 DAYS 310.0 DAYS   1.1 YRS.   1.4 YRS.
1.6 YRS.   1.9 YRS.   2.2 YRS.   2.4 YRS.
  RH*103    0.         0.         0.         0.         0.         0.
0.         0.         0.         0.
  RH 103    0.         0.         0.         0.         0.         0.
0.         0.         0.         0.
  RH*104    4.840E-09  0.         0.         0.         0.         0.
0.         0.         0.         0.
  RH 104    3.340E-04  0.         0.         0.         0.         0.
0.         0.         0.         0.
  RH*105    0.         0.         0.         0.         0.         0.
0.         0.         0.         0.
  RH 105    3.423E-04  3.316E-28  0.         0.         0.         0.
0.         0.         0.         0.
  RH*106    1.301E-04  0.         0.         0.         0.         0.
0.         0.         0.         0.
  RH 106    8.027E-04  4.739E-04  3.956E-04  3.304E-04  2.758E-04  2.303E-04
1.923E-04  1.605E-04  1.340E-04  1.119E-04
  RH 107    1.037E-05  0.         0.         0.         0.         0.
0.         0.         0.         0.
  RH 108    1.953E-03  0.         0.         0.         0.         0.
0.         0.         0.         0.
  RH 109    8.500E-04  0.         0.         0.         0.         0.
0.         0.         0.         0.
  TOTAL     4.423E-03  4.739E-04  3.956E-04  3.304E-04  2.758E-04  2.303E-04
1.923E-04  1.605E-04  1.340E-04  1.119E-04

                                        GAMMA POWER AFTER SHUTDOWN - MW
  RH*103    1.633E-04  2.042E-05  3.936E-06  7.600E-07  1.464E-07  2.822E-08
5.438E-09  1.048E-09  2.023E-10  3.899E-11
  RH 103    0.         0.         0.         0.         0.         0.
0.         0.         0.         0.
  RH*104    3.170E-06  0.         0.         0.         0.         0.
0.         0.         0.         0.
  RH 104    4.430E-06  0.         0.         0.         0.         0.
0.         0.         0.         0.
  RH*105    8.835E-05  0.         0.         0.         0.         0.
0.         0.         0.         0.
  RH 105    6.443E-05  6.242E-29  0.         0.         0.         0.
0.         0.         0.         0.
  RH*106    9.766E-04  0.         0.         0.         0.         0.
0.         0.         0.         0.
  RH 106    1.273E-04  7.514E-05  6.273E-05  5.239E-05  4.374E-05  3.652E-05
3.049E-05  2.545E-05  2.126E-05  1.775E-05
  RH 107    8.098E-06  0.         0.         0.         0.         0.
0.         0.         0.         0.
  RH 108    6.207E-04  0.         0.         0.         0.         0.
0.         0.         0.         0.
  RH 109    2.272E-04  0.         0.         0.         0.         0.
0.         0.         0.         0.
```

```
  TOTAL      2.284E-03  9.557E-05  6.667E-05  5.315E-05  4.389E-05  3.655E-05
3.049E-05  2.546E-05  2.126E-05  1.775E-05


 ORR   FUEL SOURCE, 22.5 MW 156  DAY  BETA POWER AFTER SHUTDOWN - MW
3510.0 MWD IN  156.0 DAYS.

AT. NO. 46 PD

 ISOTOPE
              SHUTDOWN 120.0 DAYS 215.0 DAYS 310.0 DAYS   1.1 YRS.   1.4 YRS.
1.6 YRS.   1.9 YRS.   2.2 YRS.   2.4 YRS.
  PD 104    0.         0.         0.         0.         0.         0.
0.         0.         0.         0.
  PD 105    0.         0.         0.         0.         0.         0.
0.         0.         0.         0.
  PD 106    0.         0.         0.         0.         0.         0.
0.         0.         0.         0.
  PD 107    2.003E-14  2.003E-14  2.003E-14  2.003E-14  2.003E-14  2.003E-14
2.003E-14  2.003E-14  2.003E-14  2.003E-14
  PD 108    0.         0.         0.         0.         0.         0.
0.         0.         0.         0.
  PD*109    0.         0.         0.         0.         0.         0.
0.         0.         0.         0.
  PD 109    2.654E-04  0.         0.         0.         0.         0.
0.         0.         0.         0.
  PD 110    0.         0.         0.         0.         0.         0.
0.         0.         0.         0.
  PD*111    2.745E-07  0.         0.         0.         0.         0.
0.         0.         0.         0.
  PD 111    1.083E-04  0.         0.         0.         0.         0.
0.         0.         0.         0.
  PD 112    5.421E-06  0.         0.         0.         0.         0.
0.         0.         0.         0.
  PD 113    1.661E-05  0.         0.         0.         0.         0.
0.         0.         0.         0.
  PD 114    5.850E-06  0.         0.         0.         0.         0.
0.         0.         0.         0.
  PD 115    1.544E-05  0.         0.         0.         0.         0.
0.         0.         0.         0.
  PD 116    5.710E-06  0.         0.         0.         0.         0.
0.         0.         0.         0.
  TOTAL     4.229E-04  2.003E-14  2.003E-14  2.003E-14  2.003E-14  2.003E-14
2.003E-14  2.003E-14  2.003E-14  2.003E-14

                                        GAMMA POWER AFTER SHUTDOWN - MW
  PD 104    0.         0.         0.         0.         0.         0.
0.         0.         0.         0.
  PD 105    0.         0.         0.         0.         0.         0.
0.         0.         0.         0.
  PD 106    0.         0.         0.         0.         0.         0.
0.         0.         0.         0.
  PD 107    0.         0.         0.         0.         0.         0.
0.         0.         0.         0.
  PD 108    0.         0.         0.         0.         0.         0.
0.         0.         0.         0.
  PD*109    1.319E-04  0.         0.         0.         0.         0.
0.         0.         0.         0.
  PD 109    1.474E-07  0.         0.         0.         0.         0.
0.         0.         0.         0.
```

```
  PD 110     0.          0.          0.          0.          0.          0.
0.          0.          0.          0.
  PD*111     3.866E-06   0.          0.          0.          0.          0.
0.          0.          0.          0.
  PD 111     3.821E-05   0.          0.          0.          0.          0.
0.          0.          0.          0.
  PD 112     1.220E-06   0.          0.          0.          0.          0.
0.          0.          0.          0.
  PD 113     0.          0.          0.          0.          0.          0.
0.          0.          0.          0.
  PD 114     0.          0.          0.          0.          0.          0.
0.          0.          0.          0.
  PD 115     0.          0.          0.          0.          0.          0.
0.          0.          0.          0.
  PD 116     0.          0.          0.          0.          0.          0.
0.          0.          0.          0.
  TOTAL      1.754E-04   0.          0.          0.          0.          0.
0.          0.          0.          0.


 ORR   FUEL SOURCE, 22.5 MW 156  DAY  BETA POWER AFTER SHUTDOWN - MW
3510.0 MWD IN  156.0 DAYS.

AT. NO. 47 AG

 ISOTOPE
              SHUTDOWN 120.0 DAYS 215.0 DAYS 310.0 DAYS   1.1 YRS.   1.4 YRS.
1.6 YRS.   1.9 YRS.   2.2 YRS.   2.4 YRS.
  AG 107     0.          0.          0.          0.          0.          0.
0.          0.          0.          0.
  AG*108     0.          0.          0.          0.          0.          0.
0.          0.          0.          0.
  AG 108     1.482E-14   2.924E-19   2.820E-19   2.720E-19   2.624E-19   2.531E-19
2.441E-19   2.354E-19   2.271E-19   2.191E-19
  AG*109     0.          0.          0.          0.          0.          0.
0.          0.          0.          0.
  AG 109     0.          0.          0.          0.          0.          0.
0.          0.          0.          0.
  AG*110     9.839E-09   7.145E-09   5.546E-09   4.306E-09   3.343E-09   2.595E-09
2.014E-09   1.563E-09   1.214E-09   9.422E-10
  AG 110     3.733E-05   2.423E-09   1.881E-09   1.460E-09   1.134E-09   8.799E-10
6.830E-10   5.301E-10   4.116E-10   3.195E-10
  AG*111     0.          0.          0.          0.          0.          0.
0.          0.          0.          0.
  AG 111     4.448E-05   6.798E-10   1.043E-13   1.619E-17   2.484E-21   3.813E-25
5.853E-29   8.983E-33   1.394E-36   0.
  AG 112     9.750E-05   0.          0.          0.          0.          0.
0.          0.          0.          0.
  AG*113     9.492E-07   0.          0.          0.          0.          0.
0.          0.          0.          0.
  AG 113     8.436E-06   0.          0.          0.          0.          0.
0.          0.          0.          0.
  AG 114     2.273E-05   0.          0.          0.          0.          0.
0.          0.          0.          0.
  AG*115     3.372E-06   0.          0.          0.          0.          0.
0.          0.          0.          0.
  AG 115     7.598E-06   0.          0.          0.          0.          0.
0.          0.          0.          0.
  AG 116     1.357E-05   0.          0.          0.          0.          0.
0.          0.          0.          0.
```

```
  AG 117     2.017E-05  0.          0.          0.          0.          0.
0.          0.          0.          0.
  TOTAL      2.561E-04  1.025E-08  7.427E-09  5.767E-09  4.476E-09  3.474E-09
2.697E-09  2.093E-09  1.625E-09  1.262E-09

                                        GAMMA POWER AFTER SHUTDOWN - MW
  AG 107     0.          0.          0.          0.          0.          0.
0.          0.          0.          0.
  AG*108     7.921E-18  7.568E-18  7.300E-18  7.042E-18  6.792E-18  6.551E-18
6.319E-18  6.095E-18  5.879E-18  5.671E-18
  AG 108     4.063E-16  8.016E-21  7.732E-21  7.458E-21  7.194E-21  6.939E-21
6.693E-21  6.456E-21  6.227E-21  6.006E-21
  AG*109     6.487E-05  0.          0.          0.          0.          0.
0.          0.          0.          0.
  AG 109     0.          0.          0.          0.          0.          0.
0.          0.          0.          0.
  AG*110     3.881E-07  2.819E-07  2.188E-07  1.699E-07  1.319E-07  1.024E-07
7.945E-08  6.167E-08  4.788E-08  3.717E-08
  AG 110     1.053E-06  6.834E-11  5.305E-11  4.119E-11  3.197E-11  2.482E-11
1.926E-11  1.495E-11  1.161E-11  9.012E-12
  AG*111     8.280E-06  0.          0.          0.          0.          0.
0.          0.          0.          0.
  AG 111     3.089E-06  4.721E-11  7.246E-15  1.124E-18  1.725E-22  2.648E-26
4.064E-30  6.238E-34  9.677E-38  0.
  AG 112     4.706E-05  0.          0.          0.          0.          0.
0.          0.          0.          0.
  AG*113     2.373E-06  0.          0.          0.          0.          0.
0.          0.          0.          0.
  AG 113     3.204E-07  0.          0.          0.          0.          0.
0.          0.          0.          0.
  AG 114     5.625E-06  0.          0.          0.          0.          0.
0.          0.          0.          0.
  AG*115     0.          0.          0.          0.          0.          0.
0.          0.          0.          0.
  AG 115     1.256E-06  0.          0.          0.          0.          0.
0.          0.          0.          0.
  AG 116     7.472E-06  0.          0.          0.          0.          0.
0.          0.          0.          0.
  AG 117     0.          0.          0.          0.          0.          0.
0.          0.          0.          0.
  TOTAL      1.418E-04  2.820E-07  2.188E-07  1.699E-07  1.319E-07  1.024E-07
7.947E-08  6.168E-08  4.789E-08  3.718E-08


 ORR   FUEL SOURCE, 22.5 MW 156  DAY  BETA POWER AFTER SHUTDOWN - MW
3510.0 MWD IN  156.0 DAYS.

AT. NO. 48 CD

 ISOTOPE
              SHUTDOWN 120.0 DAYS 215.0 DAYS 310.0 DAYS   1.1 YRS.   1.4 YRS.
1.6 YRS.   1.9 YRS.   2.2 YRS.   2.4 YRS.
  CD 108     0.          0.          0.          0.          0.          0.
0.          0.          0.          0.
  CD 110     0.          0.          0.          0.          0.          0.
0.          0.          0.          0.
  CD*111     0.          0.          0.          0.          0.          0.
0.          0.          0.          0.
  CD 111     0.          0.          0.          0.          0.          0.
0.          0.          0.          0.
```

```
  CD 112     0.          0.          0.          0.          0.          0.
0.          0.          0.          0.
  CD*113     1.662E-12   1.636E-12   1.615E-12   1.594E-12   1.574E-12   1.553E-12
1.533E-12   1.514E-12   1.494E-12   1.475E-12
  CD 113     0.          0.          0.          0.          0.          0.
0.          0.          0.          0.
  CD 114     0.          0.          0.          0.          0.          0.
0.          0.          0.          0.
  CD*115     3.498E-07   5.056E-08   1.093E-08   2.367E-09   5.116E-10   1.106E-10
2.390E-11   5.167E-12   1.119E-12   2.419E-13
  CD 115     2.575E-06   5.059E-22   1.851E-34   0.          0.          0.
0.          0.          0.          0.
  CD 116     0.          0.          0.          0.          0.          0.
0.          0.          0.          0.
  CD*117     2.166E-06   0.          0.          0.          0.          0.
0.          0.          0.          0.
  CD 117     4.339E-06   0.          0.          0.          0.          0.
0.          0.          0.          0.
  CD 118     1.796E-06   0.          0.          0.          0.          0.
0.          0.          0.          0.
  CD*119     1.277E-05   0.          0.          0.          0.          0.
0.          0.          0.          0.
  CD 119     1.179E-07   0.          0.          0.          0.          0.
0.          0.          0.          0.
  CD 121     2.476E-06   0.          0.          0.          0.          0.
0.          0.          0.          0.
  TOTAL      2.659E-05   5.056E-08   1.093E-08   2.368E-09   5.132E-10   1.121E-10
2.544E-11   6.681E-12   2.613E-12   1.717E-12

                                          GAMMA POWER AFTER SHUTDOWN - MW
  CD 108     0.          0.          0.          0.          0.          0.
0.          0.          0.          0.
  CD 110     0.          0.          0.          0.          0.          0.
0.          0.          0.          0.
  CD*111     4.056E-10   0.          0.          0.          0.          0.
0.          0.          0.          0.
  CD 111     0.          0.          0.          0.          0.          0.
0.          0.          0.          0.
  CD 112     0.          0.          0.          0.          0.          0.
0.          0.          0.          0.
  CD*113     2.771E-15   2.726E-15   2.691E-15   2.657E-15   2.623E-15   2.589E-15
2.556E-15   2.523E-15   2.491E-15   2.459E-15
  CD 113     0.          0.          0.          0.          0.          0.
0.          0.          0.          0.
  CD 114     0.          0.          0.          0.          0.          0.
0.          0.          0.          0.
  CD*115     2.065E-08   2.984E-09   6.449E-10   1.397E-10   3.019E-11   6.526E-12
1.411E-12   3.049E-13   6.604E-14   1.428E-14
  CD 115     1.545E-06   3.035E-22   1.110E-34   0.          0.          0.
0.          0.          0.          0.
  CD 116     0.          0.          0.          0.          0.          0.
0.          0.          0.          0.
  CD*117     9.901E-06   0.          0.          0.          0.          0.
0.          0.          0.          0.
  CD 117     3.037E-06   0.          0.          0.          0.          0.
0.          0.          0.          0.
  CD 118     1.330E-06   0.          0.          0.          0.          0.
0.          0.          0.          0.
  CD*119     0.          0.          0.          0.          0.          0.
0.          0.          0.          0.
```

```
  CD 119    8.184E-09  0.         0.         0.         0.         0.
0.         0.         0.         0.
  CD 121    1.217E-06  0.         0.         0.         0.         0.
0.         0.         0.         0.
  TOTAL     1.706E-05  2.984E-09  6.449E-10  1.397E-10  3.019E-11  6.529E-12
1.413E-12  3.075E-13  6.853E-14  1.673E-14


 ORR   FUEL SOURCE, 22.5 MW 156  DAY  BETA POWER AFTER SHUTDOWN - MW
3510.0 MWD IN  156.0 DAYS.

AT. NO. 49 IN

 ISOTOPE
              SHUTDOWN 120.0 DAYS 215.0 DAYS 310.0 DAYS   1.1 YRS.   1.4 YRS.
1.6 YRS.   1.9 YRS.   2.2 YRS.   2.4 YRS.
  IN 113    0.         0.         0.         0.         0.         0.
0.         0.         0.         0.
  IN*114    0.         0.         0.         0.         0.         0.
0.         0.         0.         0.
  IN 114    1.203E-14  9.299E-16  2.491E-16  6.682E-17  1.790E-17  4.795E-18
1.284E-18  3.440E-19  9.229E-20  2.472E-20
  IN*115    1.208E-07  2.577E-23  9.426E-36  0.         0.         0.
0.         0.         0.         0.
  IN 115    0.         0.         0.         0.         0.         0.
0.         0.         0.         0.
  IN*116    3.387E-07  0.         0.         0.         0.         0.
0.         0.         0.         0.
  IN 116    4.580E-07  0.         0.         0.         0.         0.
0.         0.         0.         0.
  IN*117    3.223E-06  0.         0.         0.         0.         0.
0.         0.         0.         0.
  IN 117    1.783E-06  0.         0.         0.         0.         0.
0.         0.         0.         0.
  IN 118    1.231E-05  0.         0.         0.         0.         0.
0.         0.         0.         0.
  IN*119    8.512E-08  0.         0.         0.         0.         0.
0.         0.         0.         0.
  IN 119    4.944E-06  0.         0.         0.         0.         0.
0.         0.         0.         0.
  IN 120    2.926E-06  0.         0.         0.         0.         0.
0.         0.         0.         0.
  IN*121    2.261E-06  0.         0.         0.         0.         0.
0.         0.         0.         0.
  IN 121    5.337E-06  0.         0.         0.         0.         0.
0.         0.         0.         0.
  IN 122    1.138E-05  0.         0.         0.         0.         0.
0.         0.         0.         0.
  IN 123    8.673E-07  0.         0.         0.         0.         0.
0.         0.         0.         0.
  TOTAL     4.603E-05  9.299E-16  2.491E-16  6.682E-17  1.790E-17  4.795E-18
1.284E-18  3.440E-19  9.229E-20  2.472E-20

                                        GAMMA POWER AFTER SHUTDOWN - MW
  IN 113    0.         0.         0.         0.         0.         0.
0.         0.         0.         0.
  IN*114    1.210E-15  2.292E-16  6.139E-17  1.647E-17  4.412E-18  1.182E-18
3.165E-19  8.479E-20  2.275E-20  6.093E-21
  IN 114    3.089E-17  2.387E-18  6.395E-19  1.716E-19  4.596E-20  1.231E-20
3.297E-21  8.832E-22  2.370E-22  6.347E-23
```

```
  IN*115    2.552E-06  5.445E-22  1.992E-34  0.         0.         0.
0.         0.         0.         0.
  IN 115    0.         0.         0.         0.         0.         0.
0.         0.         0.         0.
  IN*116    2.914E-06  0.         0.         0.         0.         0.
0.         0.         0.         0.
  IN 116    0.         0.         0.         0.         0.         0.
0.         0.         0.         0.
  IN*117    8.182E-07  0.         0.         0.         0.         0.
0.         0.         0.         0.
  IN 117    5.422E-06  0.         0.         0.         0.         0.
0.         0.         0.         0.
  IN 118    1.623E-06  0.         0.         0.         0.         0.
0.         0.         0.         0.
  IN*119    5.402E-09  0.         0.         0.         0.         0.
0.         0.         0.         0.
  IN 119    6.809E-06  0.         0.         0.         0.         0.
0.         0.         0.         0.
  IN 120    1.064E-05  0.         0.         0.         0.         0.
0.         0.         0.         0.
  IN*121    0.         0.         0.         0.         0.         0.
0.         0.         0.         0.
  IN 121    4.180E-06  0.         0.         0.         0.         0.
0.         0.         0.         0.
  IN 122    9.087E-06  0.         0.         0.         0.         0.
0.         0.         0.         0.
  IN 123    6.863E-07  0.         0.         0.         0.         0.
0.         0.         0.         0.
  TOTAL     4.474E-05  2.316E-16  6.203E-17  1.664E-17  4.458E-18  1.194E-18
3.198E-19  8.567E-20  2.298E-20  6.157E-21


 ORR   FUEL SOURCE, 22.5 MW 156  DAY  BETA POWER AFTER SHUTDOWN - MW
3510.0 MWD IN  156.0 DAYS.

AT. NO. 50 SN

 ISOTOPE
              SHUTDOWN 120.0 DAYS 215.0 DAYS 310.0 DAYS   1.1 YRS.   1.4 YRS.
1.6 YRS.   1.9 YRS.   2.2 YRS.   2.4 YRS.
  SN 115    0.         0.         0.         0.         0.         0.
0.         0.         0.         0.
  SN 116    0.         0.         0.         0.         0.         0.
0.         0.         0.         0.
  SN*117    0.         0.         0.         0.         0.         0.
0.         0.         0.         0.
  SN 117    0.         0.         0.         0.         0.         0.
0.         0.         0.         0.
  SN 118    0.         0.         0.         0.         0.         0.
0.         0.         0.         0.
  SN*119    0.         0.         0.         0.         0.         0.
0.         0.         0.         0.
  SN 119    0.         0.         0.         0.         0.         0.
0.         0.         0.         0.
  SN 120    0.         0.         0.         0.         0.         0.
0.         0.         0.         0.
  SN*121    3.234E-09  3.205E-09  3.182E-09  3.159E-09  3.136E-09  3.113E-09
3.091E-09  3.069E-09  3.047E-09  3.025E-09
  SN 121    3.268E-06  2.504E-38  0.         0.         0.         0.
0.         0.         0.         0.
```

SN 122	0.	0.	0.	0.	0.	0.
0.	0.	0.	0.			
SN*123	1.937E-07	9.955E-08	5.878E-08	3.473E-08	2.050E-08	1.211E-08
7.148E-09	4.220E-09	2.493E-09	1.472E-09			
SN 123	4.242E-06	0.	0.	0.	0.	0.
0.	0.	0.	0.			
SN 124	0.	0.	0.	0.	0.	0.
0.	0.	0.	0.			
SN*125	5.740E-06	0.	0.	0.	0.	0.
0.	0.	0.	0.			
SN 125	3.831E-05	5.492E-09	4.974E-12	4.543E-15	4.114E-18	3.726E-21
3.375E-24	3.056E-27	2.792E-30	2.528E-33			
SN 126	4.999E-11	4.999E-11	4.999E-11	4.999E-11	4.999E-11	4.999E-11
4.999E-11	4.999E-11	4.999E-11	4.999E-11			
SN 127	4.645E-04	0.	0.	0.	0.	0.
0.	0.	0.	0.			
SN 128	1.662E-03	0.	0.	0.	0.	0.
0.	0.	0.	0.			
SN 130	9.518E-03	0.	0.	0.	0.	0.
0.	0.	0.	0.			
TOTAL	1.170E-02	1.083E-07	6.202E-08	3.794E-08	2.369E-08	1.527E-08
1.029E-08	7.339E-09	5.590E-09	4.547E-09			

GAMMA POWER AFTER SHUTDOWN - MW

SN 115	0.	0.	0.	0.	0.	0.
0.	0.	0.	0.			
SN 116	0.	0.	0.	0.	0.	0.
0.	0.	0.	0.			
SN*117	4.916E-12	1.291E-14	1.169E-16	1.064E-18	9.635E-21	8.723E-23
7.897E-25	7.150E-27	6.511E-29	5.894E-31			
SN 117	0.	0.	0.	0.	0.	0.
0.	0.	0.	0.			
SN 118	0.	0.	0.	0.	0.	0.
0.	0.	0.	0.			
SN*119	2.926E-08	2.098E-08	1.612E-08	1.239E-08	9.521E-09	7.316E-09
5.622E-09	4.320E-09	3.320E-09	2.551E-09			
SN 119	0.	0.	0.	0.	0.	0.
0.	0.	0.	0.			
SN 120	0.	0.	0.	0.	0.	0.
0.	0.	0.	0.			
SN*121	2.156E-10	2.136E-10	2.121E-10	2.106E-10	2.091E-10	2.076E-10
2.061E-10	2.046E-10	2.031E-10	2.017E-10			
SN 121	0.	0.	0.	0.	0.	0.
0.	0.	0.	0.			
SN 122	0.	0.	0.	0.	0.	0.
0.	0.	0.	0.			
SN*123	8.194E-09	4.212E-09	2.487E-09	1.469E-09	8.675E-10	5.122E-10
3.024E-10	1.785E-10	1.055E-10	6.228E-11			
SN 123	1.476E-06	0.	0.	0.	0.	0.
0.	0.	0.	0.			
SN 124	0.	0.	0.	0.	0.	0.
0.	0.	0.	0.			
SN*125	2.623E-06	0.	0.	0.	0.	0.
0.	0.	0.	0.			
SN 125	3.915E-06	5.611E-10	5.082E-13	4.642E-16	4.204E-19	3.807E-22
3.448E-25	3.123E-28	2.852E-31	2.583E-34			
SN 126	3.749E-11	3.749E-11	3.749E-11	3.749E-11	3.749E-11	3.749E-11
3.749E-11	3.749E-11	3.749E-11	3.749E-11			
SN 127	3.466E-04	0.	0.	0.	0.	0.
0.	0.	0.	0.			

```
  SN 128     1.411E-03  0.          0.          0.          0.          0.
0.          0.          0.          0.
  SN 130     0.          0.          0.          0.          0.          0.
0.          0.          0.          0.
  TOTAL      1.766E-03  2.600E-08  1.886E-08  1.411E-08  1.064E-08  8.073E-09
6.168E-09  4.740E-09  3.666E-09  2.853E-09


 ORR   FUEL SOURCE, 22.5 MW 156  DAY  BETA POWER AFTER SHUTDOWN - MW
3510.0 MWD IN  156.0 DAYS.
□
AT. NO. 51 SB

 ISOTOPE
□              SHUTDOWN 120.0 DAYS 215.0 DAYS 310.0 DAYS   1.1 YRS.   1.4 YRS.
1.6 YRS.   1.9 YRS.   2.2 YRS.   2.4 YRS.
  SB 121     0.          0.          0.          0.          0.          0.
0.          0.          0.          0.
  SB*122     0.          0.          0.          0.          0.          0.
0.          0.          0.          0.
  SB 122     7.134E-08  5.189E-21  2.058E-31  0.          0.          0.
0.          0.          0.          0.
  SB 123     0.          0.          0.          0.          0.          0.
0.          0.          0.          0.
  SB*124     4.916E-10  0.          0.          0.          0.          0.
0.          0.          0.          0.
  SB 124     5.405E-09  1.357E-09  4.544E-10  1.524E-10  5.102E-11  1.708E-11
5.720E-12  1.915E-12  6.422E-13  2.150E-13
  SB 125     3.597E-07  3.659E-07  3.423E-07  3.202E-07  2.995E-07  2.801E-07
2.620E-07  2.451E-07  2.292E-07  2.144E-07
  SB*126     3.249E-12  3.250E-12  3.250E-12  3.250E-12  3.250E-12  3.250E-12
3.249E-12  3.249E-12  3.249E-12  3.249E-12
  SB 126     3.835E-07  7.984E-10  3.077E-10  3.052E-10  3.052E-10  3.052E-10
3.052E-10  3.052E-10  3.052E-10  3.052E-10
  SB 127     1.352E-04  7.525E-14  3.483E-21  1.646E-28  7.620E-36  0.
0.          0.          0.          0.
  SB*128     1.530E-05  0.          0.          0.          0.          0.
0.          0.          0.          0.
  SB 128     6.227E-04  0.          0.          0.          0.          0.
0.          0.          0.          0.
  SB 129     6.098E-04  0.          0.          0.          0.          0.
0.          0.          0.          0.
  SB 130     3.870E-03  0.          0.          0.          0.          0.
0.          0.          0.          0.
  SB 131     4.312E-03  0.          0.          0.          0.          0.
0.          0.          0.          0.
  SB 132     1.258E-02  0.          0.          0.          0.          0.
0.          0.          0.          0.
  SB 133     6.650E-03  0.          0.          0.          0.          0.
0.          0.          0.          0.
  SB 134     1.253E-02  0.          0.          0.          0.          0.
0.          0.          0.          0.
  SB 135     1.012E-02  0.          0.          0.          0.          0.
0.          0.          0.          0.
  TOTAL      5.144E-02  3.681E-07  3.430E-07  3.206E-07  2.998E-07  2.804E-07
2.623E-07  2.454E-07  2.296E-07  2.147E-07

                                          GAMMA POWER AFTER SHUTDOWN - MW
  SB 121     0.          0.          0.          0.          0.          0.
0.          0.          0.          0.
```

```
  SB*122    1.727E-10  0.         0.         0.         0.         0.
0.         0.         0.         0.
  SB 122    4.981E-08  3.623E-21  1.437E-31  0.         0.         0.
0.         0.         0.         0.
  SB 123    0.         0.         0.         0.         0.         0.
0.         0.         0.         0.
  SB*124    2.164E-10  0.         0.         0.         0.         0.
0.         0.         0.         0.
  SB 124    2.701E-08  6.782E-09  2.271E-09  7.614E-10  2.550E-10  8.537E-11
2.859E-11  9.572E-12  3.209E-12  1.075E-12
  SB 125    1.555E-06  1.582E-06  1.480E-06  1.384E-06  1.295E-06  1.211E-06
1.133E-06  1.059E-06  9.910E-07  9.269E-07
  SB*126    4.874E-11  4.874E-11  4.874E-11  4.874E-11  4.874E-11  4.874E-11
4.874E-11  4.874E-11  4.874E-11  4.874E-11
  SB 126    9.225E-07  1.921E-09  7.402E-10  7.342E-10  7.341E-10  7.341E-10
7.341E-10  7.341E-10  7.341E-10  7.341E-10
  SB 127    1.797E-04  1.000E-13  4.629E-21  2.187E-28  1.013E-35  0.
0.         0.         0.         0.
  SB*128    1.574E-04  0.         0.         0.         0.         0.
0.         0.         0.         0.
  SB 128    8.821E-04  0.         0.         0.         0.         0.
0.         0.         0.         0.
  SB 129    1.031E-03  0.         0.         0.         0.         0.
0.         0.         0.         0.
  SB 130    2.250E-03  0.         0.         0.         0.         0.
0.         0.         0.         0.
  SB 131    0.         0.         0.         0.         0.         0.
0.         0.         0.         0.
  SB 132    0.         0.         0.         0.         0.         0.
0.         0.         0.         0.
  SB 133    0.         0.         0.         0.         0.         0.
0.         0.         0.         0.
  SB 134    7.262E-04  0.         0.         0.         0.         0.
0.         0.         0.         0.
  SB 135    0.         0.         0.         0.         0.         0.
0.         0.         0.         0.
  TOTAL     5.229E-03  1.591E-06  1.483E-06  1.386E-06  1.296E-06  1.212E-06
1.133E-06  1.060E-06  9.918E-07  9.277E-07


 ORR   FUEL SOURCE, 22.5 MW 156  DAY  BETA POWER AFTER SHUTDOWN - MW
3510.0 MWD IN  156.0 DAYS.

AT. NO. 52 TE

 ISOTOPE
              SHUTDOWN 120.0 DAYS 215.0 DAYS 310.0 DAYS   1.1 YRS.   1.4 YRS.
1.6 YRS.   1.9 YRS.   2.2 YRS.   2.4 YRS.
  TE 122    0.         0.         0.         0.         0.         0.
0.         0.         0.         0.
  TE*123    0.         0.         0.         0.         0.         0.
0.         0.         0.         0.
  TE 123    0.         0.         0.         0.         0.         0.
0.         0.         0.         0.
  TE 124    0.         0.         0.         0.         0.         0.
0.         0.         0.         0.
  TE*125    0.         0.         0.         0.         0.         0.
0.         0.         0.         0.
  TE 125    0.         0.         0.         0.         0.         0.
0.         0.         0.         0.
```

TE 126	0.	0.	0.	0.	0.	0.	0.	0.	0.	0.	
TE*127	1.724E-07	8.328E-08	4.448E-08	2.377E-08	1.269E-08	6.779E-09	3.621E-09	1.934E-09	1.033E-09	5.519E-10	
TE 127	7.494E-05	4.619E-06	2.467E-06	1.318E-06	7.041E-07	3.760E-07	2.008E-07	1.072E-07	5.731E-08	3.061E-08	
TE 128	0.	0.	0.	0.	0.	0.	0.	0.	0.	0.	
TE*129	0.	0.	0.	0.	0.	0.	0.	0.	0.	0.	
TE 129	4.994E-04	1.420E-05	1.929E-06	2.628E-07	3.572E-08	4.853E-09	6.595E-10	8.963E-11	1.221E-11	1.659E-12	
TE 130	0.	0.	0.	0.	0.	0.	0.	0.	0.	0.	
TE*131	9.228E-05	7.270E-35	0.	0.	0.	0.	0.	0.	0.	0.	
TE 131	2.409E-03	7.403E-35	0.	0.	0.	0.	0.	0.	0.	0.	
TE 132	2.965E-04	2.265E-15	3.579E-24	5.795E-33	0.	0.	0.	0.	0.	0.	
TE*133	1.945E-03	0.	0.	0.	0.	0.	0.	0.	0.	0.	
TE 133	2.702E-03	0.	0.	0.	0.	0.	0.	0.	0.	0.	
TE 134	4.132E-03	0.	0.	0.	0.	0.	0.	0.	0.	0.	
TE 135	8.582E-03	0.	0.	0.	0.	0.	0.	0.	0.	0.	
TOTAL	2.073E-02	1.890E-05	4.441E-06	1.605E-06	7.525E-07	3.876E-07	2.051E-07	1.093E-07	5.836E-08	3.116E-08	

GAMMA POWER AFTER SHUTDOWN - MW

TE 122	0.	0.	0.	0.	0.	0.	0.	0.	0.	0.	
TE*123	3.016E-12	1.355E-12	7.195E-13	3.822E-13	2.029E-13	1.077E-13	5.717E-14	3.035E-14	1.612E-14	8.559E-15	
TE 123	0.	0.	0.	0.	0.	0.	0.	0.	0.	0.	
TE 124	0.	0.	0.	0.	0.	0.	0.	0.	0.	0.	
TE*125	7.028E-08	1.292E-07	1.353E-07	1.312E-07	1.242E-07	1.166E-07	1.092E-07	1.022E-07	9.565E-08	8.947E-08	
TE 125	0.	0.	0.	0.	0.	0.	0.	0.	0.	0.	
TE 126	0.	0.	0.	0.	0.	0.	0.	0.	0.	0.	
TE*127	3.701E-06	1.788E-06	9.546E-07	5.102E-07	2.725E-07	1.455E-07	7.771E-08	4.150E-08	2.218E-08	1.184E-08	
TE 127	1.303E-06	8.033E-08	4.290E-08	2.293E-08	1.224E-08	6.539E-09	3.492E-09	1.865E-09	9.967E-10	5.323E-10	
TE 128	0.	0.	0.	0.	0.	0.	0.	0.	0.	0.	
TE*129	4.131E-05	3.340E-06	4.538E-07	6.182E-08	8.401E-09	1.142E-09	1.551E-10	2.108E-11	2.872E-12	3.903E-13	
TE 129	2.641E-04	7.509E-06	1.020E-06	1.390E-07	1.889E-08	2.567E-09	3.488E-10	4.740E-11	6.457E-12	8.775E-13	
TE 130	0.	0.	0.	0.	0.	0.	0.	0.	0.	0.	
TE*131	8.467E-04	6.670E-34	0.	0.	0.	0.	0.	0.	0.	0.	

```
  TE 131    1.224E-03  3.762E-35  0.         0.         0.         0.
0.         0.         0.         0.
  TE 132    1.509E-03  1.153E-14  1.822E-23  2.950E-32  0.         0.
0.         0.         0.         0.
  TE*133    6.404E-03  0.         0.         0.         0.         0.
0.         0.         0.         0.
  TE 133    1.671E-03  0.         0.         0.         0.         0.
0.         0.         0.         0.
  TE 134    7.947E-04  0.         0.         0.         0.         0.
0.         0.         0.         0.
  TE 135    0.         0.         0.         0.         0.         0.
0.         0.         0.         0.
  TOTAL     1.276E-02  1.285E-05  2.607E-06  8.651E-07  4.362E-07  2.724E-07
1.910E-07  1.457E-07  1.188E-07  1.018E-07


 ORR   FUEL SOURCE, 22.5 MW 156  DAY  BETA POWER AFTER SHUTDOWN - MW
3510.0 MWD IN  156.0 DAYS.

AT. NO. 53 I

 ISOTOPE
                SHUTDOWN 120.0 DAYS 215.0 DAYS 310.0 DAYS   1.1 YRS.   1.4 YRS.
1.6 YRS.   1.9 YRS.   2.2 YRS.   2.4 YRS.
  I  127    0.         0.         0.         0.         0.         0.
0.         0.         0.         0.
  I  128    1.262E-06  0.         0.         0.         0.         0.
0.         0.         0.         0.
  I  129    9.185E-13  1.022E-12  1.030E-12  1.031E-12  1.031E-12  1.031E-12
1.031E-12  1.031E-12  1.031E-12  1.031E-12
  I  130    7.415E-06  0.         0.         0.         0.         0.
0.         0.         0.         0.
  I  131    6.859E-04  2.296E-08  6.420E-12  1.813E-15  5.072E-19  1.418E-22
3.967E-26  1.109E-29  3.134E-33  8.764E-37
  I  132    2.641E-03  2.080E-14  3.285E-23  5.320E-32  0.         0.
0.         0.         0.         0.
  I  133    3.060E-03  0.         0.         0.         0.         0.
0.         0.         0.         0.
  I  134    6.630E-03  0.         0.         0.         0.         0.
0.         0.         0.         0.
  I  135    2.330E-03  0.         0.         0.         0.         0.
0.         0.         0.         0.
  I  136    5.001E-03  0.         0.         0.         0.         0.
0.         0.         0.         0.
  I  137    1.230E-02  0.         0.         0.         0.         0.
0.         0.         0.         0.
  I  138    1.233E-02  0.         0.         0.         0.         0.
0.         0.         0.         0.
  I  139    4.738E-03  0.         0.         0.         0.         0.
0.         0.         0.         0.
  TOTAL     4.972E-02  2.296E-08  7.450E-12  1.032E-12  1.031E-12  1.031E-12
1.031E-12  1.031E-12  1.031E-12  1.031E-12

                                     GAMMA POWER AFTER SHUTDOWN - MW
  I  127    0.         0.         0.         0.         0.         0.
0.         0.         0.         0.
  I  128    1.525E-07  0.         0.         0.         0.         0.
0.         0.         0.         0.
  I  129    7.348E-13  8.175E-13  8.237E-13  8.245E-13  8.246E-13  8.246E-13
8.246E-13  8.246E-13  8.246E-13  8.246E-13
```

```
  I  130    5.830E-05  0.         0.         0.         0.         0.
0.         0.         0.         0.
  I  131    1.520E-03  5.089E-08  1.423E-11  4.020E-15  1.124E-18  3.144E-22
8.793E-26  2.459E-29  6.946E-33  1.943E-36
  I  132    1.212E-02  9.545E-14  1.508E-22  2.442E-31  0.         0.
0.         0.         0.         0.
  I  133    3.526E-03  0.         0.         0.         0.         0.
0.         0.         0.         0.
  I  134    2.125E-02  0.         0.         0.         0.         0.
0.         0.         0.         0.
  I  135    1.196E-02  0.         0.         0.         0.         0.
0.         0.         0.         0.
  I  136    9.635E-03  0.         0.         0.         0.         0.
0.         0.         0.         0.
  I  137    3.987E-03  0.         0.         0.         0.         0.
0.         0.         0.         0.
  I  138    5.968E-03  0.         0.         0.         0.         0.
0.         0.         0.         0.
  I  139    0.         0.         0.         0.         0.         0.
0.         0.         0.         0.
  TOTAL     7.002E-02  5.089E-08  1.505E-11  8.285E-13  8.246E-13  8.246E-13
8.246E-13  8.246E-13  8.246E-13  8.246E-13


 ORR   FUEL SOURCE, 22.5 MW 156  DAY  BETA POWER AFTER SHUTDOWN - MW
3510.0 MWD IN  156.0 DAYS.

AT. NO. 54 XE

 ISOTOPE
              SHUTDOWN 120.0 DAYS 215.0 DAYS 310.0 DAYS   1.1 YRS.   1.4 YRS.
1.6 YRS.   1.9 YRS.   2.2 YRS.   2.4 YRS.
  XE 128    0.         0.         0.         0.         0.         0.
0.         0.         0.         0.
  XE 129    0.         0.         0.         0.         0.         0.
0.         0.         0.         0.
  XE 130    0.         0.         0.         0.         0.         0.
0.         0.         0.         0.
  XE*131    0.         0.         0.         0.         0.         0.
0.         0.         0.         0.
  XE 131    0.         0.         0.         0.         0.         0.
0.         0.         0.         0.
  XE 132    0.         0.         0.         0.         0.         0.
0.         0.         0.         0.
  XE*133    0.         0.         0.         0.         0.         0.
0.         0.         0.         0.
  XE 133    7.475E-04  1.252E-10  4.674E-16  1.772E-21  6.617E-27  2.471E-32
9.227E-38  0.         0.         0.
  XE 134    0.         0.         0.         0.         0.         0.
0.         0.         0.         0.
  XE*135    0.         0.         0.         0.         0.         0.
0.         0.         0.         0.
  XE 135    2.373E-04  0.         0.         0.         0.         0.
0.         0.         0.         0.
  XE 136    0.         0.         0.         0.         0.         0.
0.         0.         0.         0.
  XE 137    1.065E-02  0.         0.         0.         0.         0.
0.         0.         0.         0.
  XE 138    6.142E-03  0.         0.         0.         0.         0.
0.         0.         0.         0.
```

XE 139	1.037E-02	0.	0.	0.	0.	0.	0.	0.	0.
XE 140	4.315E-03	0.	0.	0.	0.	0.	0.	0.	0.
XE 141	3.935E-03	0.	0.	0.	0.	0.	0.	0.	0.
XE 142	6.347E-04	0.	0.	0.	0.	0.	0.	0.	0.
XE 143	9.480E-03	0.	0.	0.	0.	0.	0.	0.	0.
XE 144	5.690E-03	0.	0.	0.	0.	0.	0.	0.	0.
TOTAL	5.220E-02	1.252E-10	4.674E-16	1.772E-21	6.617E-27	2.471E-32	9.227E-38	0.	0.

GAMMA POWER AFTER SHUTDOWN - MW

XE 128	0.	0.	0.	0.	0.	0.	0.	0.	0.
XE 129	0.	0.	0.	0.	0.	0.	0.	0.	0.
XE 130	0.	0.	0.	0.	0.	0.	0.	0.	0.
XE*131	5.104E-06	1.362E-08	5.746E-11	2.394E-13	9.896E-16	4.090E-18	1.691E-20	6.988E-23	2.908E-25
XE 131	0.	0.	0.	0.	0.	0.	0.	0.	0.
XE 132	0.	0.	0.	0.	0.	0.	0.	0.	0.
XE*133	3.623E-05	1.092E-20	3.994E-33	0.	0.	0.	0.	0.	0.
XE 133	6.129E-04	1.026E-10	3.833E-16	1.453E-21	5.426E-27	2.026E-32	7.566E-38	0.	0.
XE 134	0.	0.	0.	0.	0.	0.	0.	0.	0.
XE*135	1.062E-03	0.	0.	0.	0.	0.	0.	0.	0.
XE 135	1.998E-04	0.	0.	0.	0.	0.	0.	0.	0.
XE 136	0.	0.	0.	0.	0.	0.	0.	0.	0.
XE 137	7.197E-03	0.	0.	0.	0.	0.	0.	0.	0.
XE 138	2.687E-03	0.	0.	0.	0.	0.	0.	0.	0.
XE 139	2.074E-03	0.	0.	0.	0.	0.	0.	0.	0.
XE 140	0.	0.	0.	0.	0.	0.	0.	0.	0.
XE 141	0.	0.	0.	0.	0.	0.	0.	0.	0.
XE 142	0.	0.	0.	0.	0.	0.	0.	0.	0.
XE 143	0.	0.	0.	0.	0.	0.	0.	0.	0.
XE 144	0.	0.	0.	0.	0.	0.	0.	0.	0.
TOTAL	1.387E-02	1.373E-08	5.746E-11	2.394E-13	9.896E-16	4.090E-18	1.691E-20	6.988E-23	2.908E-25

ORR FUEL SOURCE, 22.5 MW 156 DAY BETA POWER AFTER SHUTDOWN - MW
3510.0 MWD IN 156.0 DAYS.

AT. NO. 55 CS

ISOTOPE

	SHUTDOWN	120.0 DAYS	215.0 DAYS	310.0 DAYS	1.1 YRS.	1.4 YRS.	1.6 YRS.	1.9 YRS.	2.2 YRS.	2.4 YRS.
CS 133	0.	0.	0.	0.	0.	0.	0.	0.	0.	0.
CS*134	2.690E-08	0.	0.	0.	0.	0.	0.	0.	0.	0.
CS 134	1.831E-06	1.643E-06	1.508E-06	1.384E-06	1.270E-06	1.165E-06	1.069E-06	9.814E-07	9.007E-07	8.265E-07
CS 135	6.064E-12	6.242E-12	6.242E-12	6.242E-12	6.242E-12	6.242E-12	6.242E-12	6.242E-12	6.242E-12	6.242E-12
CS 136	6.650E-06	1.106E-08	6.970E-11	4.422E-13	2.788E-15	1.757E-17	1.108E-19	6.985E-22	4.431E-24	2.794E-26
CS 137	1.395E-05	1.384E-05	1.376E-05	1.368E-05	1.359E-05	1.351E-05	1.343E-05	1.335E-05	1.327E-05	1.319E-05
CS 138	7.465E-03	0.	0.	0.	0.	0.	0.	0.	0.	0.
CS 139	1.140E-02	0.	0.	0.	0.	0.	0.	0.	0.	0.
CS 140	1.714E-02	0.	0.	0.	0.	0.	0.	0.	0.	0.
CS 141	9.183E-03	0.	0.	0.	0.	0.	0.	0.	0.	0.
CS 142	1.106E-02	0.	0.	0.	0.	0.	0.	0.	0.	0.
CS 143	1.512E-02	0.	0.	0.	0.	0.	0.	0.	0.	0.
CS 144	1.819E-02	0.	0.	0.	0.	0.	0.	0.	0.	0.
TOTAL	8.958E-02	1.550E-05	1.527E-05	1.506E-05	1.486E-05	1.468E-05	1.450E-05	1.433E-05	1.417E-05	1.402E-05

GAMMA POWER AFTER SHUTDOWN - MW

CS 133	0.	0.	0.	0.	0.	0.	0.	0.	0.	0.
CS*134	2.421E-06	0.	0.	0.	0.	0.	0.	0.	0.	0.
CS 134	1.818E-05	1.631E-05	1.497E-05	1.374E-05	1.260E-05	1.157E-05	1.061E-05	9.740E-06	8.939E-06	8.203E-06
CS 135	0.	0.	0.	0.	0.	0.	0.	0.	0.	0.
CS 136	1.491E-04	2.479E-07	1.563E-09	9.913E-12	6.249E-14	3.940E-16	2.484E-18	1.566E-20	9.934E-23	6.263E-25
CS 137	0.	0.	0.	0.	0.	0.	0.	0.	0.	0.
CS 138	1.461E-02	0.	0.	0.	0.	0.	0.	0.	0.	0.
CS 139	1.520E-03	0.	0.	0.	0.	0.	0.	0.	0.	0.
CS 140	3.802E-03	0.	0.	0.	0.	0.	0.	0.	0.	0.
CS 141	0.	0.	0.	0.	0.	0.	0.	0.	0.	0.
CS 142	0.	0.	0.	0.	0.	0.	0.	0.	0.	0.

```
  CS 143     0.          0.          0.          0.          0.          0.
0.          0.          0.          0.
  CS 144     0.          0.          0.          0.          0.          0.
0.          0.          0.          0.
  TOTAL      2.010E-02  1.656E-05  1.497E-05  1.374E-05  1.260E-05  1.157E-05
1.061E-05  9.740E-06  8.939E-06  8.203E-06


 ORR   FUEL SOURCE, 22.5 MW 156  DAY  BETA POWER AFTER SHUTDOWN - MW
3510.0 MWD IN  156.0 DAYS.

AT. NO. 56 BA

 ISOTOPE
              SHUTDOWN 120.0 DAYS 215.0 DAYS 310.0 DAYS   1.1 YRS.   1.4 YRS.
1.6 YRS.   1.9 YRS.   2.2 YRS.   2.4 YRS.
  BA 134     0.          0.          0.          0.          0.          0.
0.          0.          0.          0.
  BA*135     0.          0.          0.          0.          0.          0.
0.          0.          0.          0.
  BA 135     0.          0.          0.          0.          0.          0.
0.          0.          0.          0.
  BA 136     0.          0.          0.          0.          0.          0.
0.          0.          0.          0.
  BA*137     0.          0.          0.          0.          0.          0.
0.          0.          0.          0.
  BA 137     0.          0.          0.          0.          0.          0.
0.          0.          0.          0.
  BA 138     0.          0.          0.          0.          0.          0.
0.          0.          0.          0.
  BA 139     6.085E-03  0.          0.          0.          0.          0.
0.          0.          0.          0.
  BA 140     1.997E-03  3.004E-06  1.749E-08  1.025E-10  5.973E-13  3.479E-15
2.026E-17  1.180E-19  6.918E-22  4.029E-24
  BA 141     7.467E-03  0.          0.          0.          0.          0.
0.          0.          0.          0.
  BA 142     4.679E-03  0.          0.          0.          0.          0.
0.          0.          0.          0.
  BA 143     9.578E-03  0.          0.          0.          0.          0.
0.          0.          0.          0.
  BA 144     5.197E-03  0.          0.          0.          0.          0.
0.          0.          0.          0.
  TOTAL      3.500E-02  3.004E-06  1.749E-08  1.025E-10  5.973E-13  3.479E-15
2.026E-17  1.180E-19  6.918E-22  4.029E-24

                                        GAMMA POWER AFTER SHUTDOWN - MW
  BA 134     0.          0.          0.          0.          0.          0.
0.          0.          0.          0.
  BA*135     1.364E-10  0.          0.          0.          0.          0.
0.          0.          0.          0.
  BA 135     0.          0.          0.          0.          0.          0.
0.          0.          0.          0.
  BA 136     0.          0.          0.          0.          0.          0.
0.          0.          0.          0.
  BA*137     4.247E-05  4.215E-05  4.190E-05  4.165E-05  4.140E-05  4.115E-05
4.090E-05  4.066E-05  4.041E-05  4.017E-05
  BA 137     0.          0.          0.          0.          0.          0.
0.          0.          0.          0.
  BA 138     0.          0.          0.          0.          0.          0.
0.          0.          0.          0.
```

```
  BA 139    3.544E-04  0.         0.         0.         0.         0.
0.         0.         0.         0.
  BA 140    1.477E-03  2.223E-06  1.295E-08  7.588E-11  4.420E-13  2.574E-15
1.499E-17  8.734E-20  5.119E-22  2.982E-24
  BA 141    3.013E-03  0.         0.         0.         0.         0.
0.         0.         0.         0.
  BA 142    6.719E-04  0.         0.         0.         0.         0.
0.         0.         0.         0.
  BA 143    0.         0.         0.         0.         0.         0.
0.         0.         0.         0.
  BA 144    0.         0.         0.         0.         0.         0.
0.         0.         0.         0.
  TOTAL     5.559E-03  4.437E-05  4.191E-05  4.165E-05  4.140E-05  4.115E-05
4.090E-05  4.066E-05  4.041E-05  4.017E-05


 ORR   FUEL SOURCE, 22.5 MW 156  DAY  BETA POWER AFTER SHUTDOWN - MW
3510.0 MWD IN  156.0 DAYS.

AT. NO. 57 LA

 ISOTOPE
              SHUTDOWN 120.0 DAYS 215.0 DAYS 310.0 DAYS   1.1 YRS.   1.4 YRS.
1.6 YRS.   1.9 YRS.   2.2 YRS.   2.4 YRS.
  LA 139    0.         0.         0.         0.         0.         0.
0.         0.         0.         0.
  LA 140    3.270E-03  5.529E-06  3.221E-08  1.888E-10  1.100E-12  6.404E-15
3.730E-17  2.173E-19  1.274E-21  7.418E-24
  LA 141    6.347E-03  0.         0.         0.         0.         0.
0.         0.         0.         0.
  LA 142    8.780E-03  0.         0.         0.         0.         0.
0.         0.         0.         0.
  LA 143    8.666E-03  0.         0.         0.         0.         0.
0.         0.         0.         0.
  LA 144    1.159E-02  0.         0.         0.         0.         0.
0.         0.         0.         0.
  TOTAL     3.865E-02  5.529E-06  3.221E-08  1.888E-10  1.100E-12  6.404E-15
3.730E-17  2.173E-19  1.274E-21  7.418E-24

                                        GAMMA POWER AFTER SHUTDOWN - MW
  LA 139    0.         0.         0.         0.         0.         0.
0.         0.         0.         0.
  LA 140    1.682E-02  2.843E-05  1.656E-07  9.706E-10  5.653E-12  3.293E-14
1.918E-16  1.117E-18  6.548E-21  3.814E-23
  LA 141    1.798E-04  0.         0.         0.         0.         0.
0.         0.         0.         0.
  LA 142    7.197E-03  0.         0.         0.         0.         0.
0.         0.         0.         0.
  LA 143    6.516E-03  0.         0.         0.         0.         0.
0.         0.         0.         0.
  LA 144    0.         0.         0.         0.         0.         0.
0.         0.         0.         0.
  TOTAL     3.071E-02  2.843E-05  1.656E-07  9.706E-10  5.653E-12  3.293E-14
1.918E-16  1.117E-18  6.548E-21  3.814E-23


 ORR   FUEL SOURCE, 22.5 MW 156  DAY  BETA POWER AFTER SHUTDOWN - MW
3510.0 MWD IN  156.0 DAYS.
```

AT. NO. 58 CE

ISOTOPE

	SHUTDOWN	120.0 DAYS	215.0 DAYS	310.0 DAYS	1.1 YRS.	1.4 YRS.	1.6 YRS.	1.9 YRS.	2.2 YRS.	2.4 YRS.
CE 140	0.	0.	0.	0.	0.	0.	0.	0.	0.	0.
CE 141	9.546E-04	7.423E-05	9.782E-06	1.292E-06	1.703E-07	2.244E-08	2.958E-09	3.898E-10	5.149E-11	6.786E-12
CE 142	0.	0.	0.	0.	0.	0.	0.	0.	0.	0.
CE 143	2.414E-03	1.286E-29	0.	0.	0.	0.	0.	0.	0.	0.
CE 144	1.560E-04	1.165E-04	9.244E-05	7.339E-05	5.824E-05	4.623E-05	3.669E-05	2.912E-05	2.312E-05	1.835E-05
CE 145	3.221E-03	0.	0.	0.	0.	0.	0.	0.	0.	0.
CE 146	7.246E-04	0.	0.	0.	0.	0.	0.	0.	0.	0.
CE 147	1.054E-03	0.	0.	0.	0.	0.	0.	0.	0.	0.
CE 148	1.837E-03	0.	0.	0.	0.	0.	0.	0.	0.	0.
TOTAL	1.036E-02	1.907E-04	1.022E-04	7.468E-05	5.841E-05	4.625E-05	3.669E-05	2.912E-05	2.312E-05	1.835E-05

GAMMA POWER AFTER SHUTDOWN - MW

CE 140	0.	0.	0.	0.	0.	0.	0.	0.	0.	0.
CE 141	6.428E-04	4.998E-05	6.587E-06	8.702E-07	1.147E-07	1.511E-08	1.992E-09	2.624E-10	3.467E-11	4.569E-12
CE 142	0.	0.	0.	0.	0.	0.	0.	0.	0.	0.
CE 143	2.460E-03	1.311E-29	0.	0.	0.	0.	0.	0.	0.	0.
CE 144	5.848E-05	4.368E-05	3.466E-05	2.752E-05	2.184E-05	1.733E-05	1.376E-05	1.092E-05	8.668E-06	6.880E-06
CE 145	0.	0.	0.	0.	0.	0.	0.	0.	0.	0.
CE 146	1.054E-03	0.	0.	0.	0.	0.	0.	0.	0.	0.
CE 147	0.	0.	0.	0.	0.	0.	0.	0.	0.	0.
CE 148	0.	0.	0.	0.	0.	0.	0.	0.	0.	0.
TOTAL	4.215E-03	9.366E-05	4.125E-05	2.839E-05	2.196E-05	1.735E-05	1.376E-05	1.092E-05	8.668E-06	6.880E-06

ORR FUEL SOURCE, 22.5 MW 156 DAY BETA POWER AFTER SHUTDOWN - MW
3510.0 MWD IN 156.0 DAYS.

AT. NO. 59 PR

ISOTOPE

	SHUTDOWN	120.0 DAYS	215.0 DAYS	310.0 DAYS	1.1 YRS.	1.4 YRS.	1.6 YRS.	1.9 YRS.	2.2 YRS.	2.4 YRS.
PR 141	0.	0.	0.	0.	0.	0.	0.	0.	0.	0.

```
  PR 142    4.108E-05  0.         0.         0.         0.         0.
0.         0.         0.         0.
  PR 143    2.081E-03  5.338E-06  4.360E-08  3.582E-10  2.925E-12  2.389E-14
1.951E-16  1.594E-18  1.309E-20  1.069E-22
  PR 144    2.545E-03  1.776E-03  1.410E-03  1.119E-03  8.882E-04  7.050E-04
5.595E-04  4.441E-04  3.525E-04  2.798E-04
  PR 145    2.845E-03  0.         0.         0.         0.         0.
0.         0.         0.         0.
  PR 146    4.261E-03  0.         0.         0.         0.         0.
0.         0.         0.         0.
  PR 147    1.524E-03  0.         0.         0.         0.         0.
0.         0.         0.         0.
  PR 148    4.197E-03  0.         0.         0.         0.         0.
0.         0.         0.         0.
  TOTAL     1.749E-02  1.782E-03  1.410E-03  1.119E-03  8.882E-04  7.050E-04
5.595E-04  4.441E-04  3.525E-04  2.798E-04

                                        GAMMA POWER AFTER SHUTDOWN - MW
  PR 141    0.         0.         0.         0.         0.         0.
0.         0.         0.         0.
  PR 142    3.118E-06  0.         0.         0.         0.         0.
0.         0.         0.         0.
  PR 143    0.         0.         0.         0.         0.         0.
0.         0.         0.         0.
  PR 144    6.466E-05  4.513E-05  3.582E-05  2.844E-05  2.257E-05  1.791E-05
1.422E-05  1.128E-05  8.958E-06  7.109E-06
  PR 145    2.343E-04  0.         0.         0.         0.         0.
0.         0.         0.         0.
  PR 146    3.714E-03  0.         0.         0.         0.         0.
0.         0.         0.         0.
  PR 147    1.360E-03  0.         0.         0.         0.         0.
0.         0.         0.         0.
  PR 148    5.802E-04  0.         0.         0.         0.         0.
0.         0.         0.         0.
  TOTAL     5.957E-03  4.513E-05  3.582E-05  2.844E-05  2.257E-05  1.791E-05
1.422E-05  1.128E-05  8.958E-06  7.109E-06


 ORR   FUEL SOURCE, 22.5 MW 156  DAY  BETA POWER AFTER SHUTDOWN - MW
3510.0 MWD IN  156.0 DAYS.

AT. NO. 60 ND

 ISOTOPE
              SHUTDOWN 120.0 DAYS 215.0 DAYS 310.0 DAYS   1.1 YRS.   1.4 YRS.
1.6 YRS.   1.9 YRS.   2.2 YRS.   2.4 YRS.
  ND 142    0.         0.         0.         0.         0.         0.
0.         0.         0.         0.
  ND 143    0.         0.         0.         0.         0.         0.
0.         0.         0.         0.
  ND 144    0.         0.         0.         0.         0.         0.
0.         0.         0.         0.
  ND 145    0.         0.         0.         0.         0.         0.
0.         0.         0.         0.
  ND 146    0.         0.         0.         0.         0.         0.
0.         0.         0.         0.
  ND 147    6.308E-04  3.508E-07  9.292E-10  2.479E-12  6.566E-15  1.739E-17
4.606E-20  1.220E-22  3.254E-25  8.620E-28
  ND 148    0.         0.         0.         0.         0.         0.
0.         0.         0.         0.
```

```
  ND 149    8.138E-04  0.         0.         0.         0.         0.
0.         0.         0.         0.
  ND 150    0.         0.         0.         0.         0.         0.
0.         0.         0.         0.
  ND 151    4.440E-04  0.         0.         0.         0.         0.
0.         0.         0.         0.
  TOTAL     1.889E-03  3.508E-07  9.292E-10  2.479E-12  6.566E-15  1.739E-17
4.606E-20  1.220E-22  3.254E-25  8.620E-28

                                        GAMMA POWER AFTER SHUTDOWN - MW
  ND 142    0.         0.         0.         0.         0.         0.
0.         0.         0.         0.
  ND 143    0.         0.         0.         0.         0.         0.
0.         0.         0.         0.
  ND 144    0.         0.         0.         0.         0.         0.
0.         0.         0.         0.
  ND 145    0.         0.         0.         0.         0.         0.
0.         0.         0.         0.
  ND 146    0.         0.         0.         0.         0.         0.
0.         0.         0.         0.
  ND 147    5.376E-04  2.990E-07  7.918E-10  2.112E-12  5.595E-15  1.482E-17
3.925E-20  1.040E-22  2.773E-25  7.346E-28
  ND 148    0.         0.         0.         0.         0.         0.
0.         0.         0.         0.
  ND 149    7.398E-04  0.         0.         0.         0.         0.
0.         0.         0.         0.
  ND 150    0.         0.         0.         0.         0.         0.
0.         0.         0.         0.
  ND 151    5.053E-04  0.         0.         0.         0.         0.
0.         0.         0.         0.
  TOTAL     1.783E-03  2.990E-07  7.918E-10  2.112E-12  5.595E-15  1.482E-17
3.925E-20  1.040E-22  2.773E-25  7.346E-28


 ORR   FUEL SOURCE, 22.5 MW 156  DAY  BETA POWER AFTER SHUTDOWN - MW
3510.0 MWD IN  156.0 DAYS.

AT. NO. 61 PM

 ISOTOPE
              SHUTDOWN 120.0 DAYS 215.0 DAYS 310.0 DAYS   1.1 YRS.   1.4 YRS.
1.6 YRS.   1.9 YRS.   2.2 YRS.   2.4 YRS.
  PM 147    1.467E-05  1.519E-05  1.418E-05  1.324E-05  1.236E-05  1.153E-05
1.077E-05  1.005E-05  9.381E-06  8.757E-06
  PM*148    8.023E-05  1.635E-11  8.249E-17  4.224E-22  2.131E-27  1.075E-32
5.424E-38  0.         0.         0.
  PM 148    7.671E-06  1.008E-06  2.023E-07  4.066E-08  8.156E-09  1.636E-09
3.282E-10  6.584E-11  1.323E-11  2.654E-12
  PM 149    6.056E-04  2.705E-20  3.000E-33  0.         0.         0.
0.         0.         0.         0.
  PM 151    2.720E-04  7.879E-35  0.         0.         0.         0.
0.         0.         0.         0.
  PM 152    2.155E-04  0.         0.         0.         0.         0.
0.         0.         0.         0.
  PM 153    8.717E-05  0.         0.         0.         0.         0.
0.         0.         0.         0.
  PM 154    1.017E-04  0.         0.         0.         0.         0.
0.         0.         0.         0.
  TOTAL     1.385E-03  1.620E-05  1.438E-05  1.328E-05  1.237E-05  1.154E-05
1.077E-05  1.005E-05  9.381E-06  8.757E-06
```

GAMMA POWER AFTER SHUTDOWN - MW

PM 147	0.	0.	0.	0.	0.	0.	0.	0.	0.	0.	0.
PM*148	2.763E-04	5.630E-11	2.841E-16	1.455E-21	7.338E-27	3.702E-32	1.868E-37	0.	0.	0.	
PM 148	2.296E-05	3.018E-06	6.054E-07	1.217E-07	2.441E-08	4.896E-09	9.822E-10	1.970E-10	3.960E-11	7.944E-12	
PM 149	5.888E-05	2.629E-21	2.917E-34	0.	0.	0.	0.	0.	0.	0.	
PM 151	5.118E-04	1.482E-34	0.	0.	0.	0.	0.	0.	0.	0.	
PM 152	7.015E-04	0.	0.	0.	0.	0.	0.	0.	0.	0.	
PM 153	4.218E-05	0.	0.	0.	0.	0.	0.	0.	0.	0.	
PM 154	0.	0.	0.	0.	0.	0.	0.	0.	0.	0.	
TOTAL	1.614E-03	3.018E-06	6.054E-07	1.217E-07	2.441E-08	4.896E-09	9.822E-10	1.970E-10	3.960E-11	7.944E-12	

ORR FUEL SOURCE, 22.5 MW 156 DAY BETA POWER AFTER SHUTDOWN - MW
3510.0 MWD IN 156.0 DAYS.

AT. NO. 62 SM

ISOTOPE

	SHUTDOWN	120.0 DAYS	215.0 DAYS	310.0 DAYS	1.1 YRS.	1.4 YRS.	1.6 YRS.	1.9 YRS.	2.2 YRS.	2.4 YRS.
SM 147	0.	0.	0.	0.	0.	0.	0.	0.	0.	0.
SM 148	0.	0.	0.	0.	0.	0.	0.	0.	0.	0.
SM 149	0.	0.	0.	0.	0.	0.	0.	0.	0.	0.
SM 150	0.	0.	0.	0.	0.	0.	0.	0.	0.	0.
SM 151	3.869E-09	4.351E-09	4.343E-09	4.334E-09	4.325E-09	4.317E-09	4.308E-09	4.299E-09	4.291E-09	4.282E-09
SM 152	0.	0.	0.	0.	0.	0.	0.	0.	0.	0.
SM 153	1.009E-04	3.560E-23	8.759E-38	0.	0.	0.	0.	0.	0.	0.
SM 154	0.	0.	0.	0.	0.	0.	0.	0.	0.	0.
SM 155	8.237E-05	0.	0.	0.	0.	0.	0.	0.	0.	0.
SM 156	1.922E-05	0.	0.	0.	0.	0.	0.	0.	0.	0.
TOTAL	2.025E-04	4.351E-09	4.343E-09	4.334E-09	4.325E-09	4.317E-09	4.308E-09	4.299E-09	4.291E-09	4.282E-09

GAMMA POWER AFTER SHUTDOWN - MW

SM 147	0.	0.	0.	0.	0.	0.	0.	0.	0.	0.	0.
SM 148	0.	0.	0.	0.	0.	0.	0.	0.	0.	0.	0.
SM 149	0.	0.	0.	0.	0.	0.	0.	0.	0.	0.	0.

```
  SM 150     0.          0.          0.          0.          0.          0.
0.          0.          0.          0.
  SM 151     8.145E-11   9.161E-11   9.142E-11   9.124E-11   9.106E-11   9.087E-11
9.069E-11   9.051E-11   9.033E-11   9.015E-11
  SM 152     0.          0.          0.          0.          0.          0.
0.          0.          0.          0.
  SM 153     4.953E-05   1.748E-23   4.300E-38   0.          0.          0.
0.          0.          0.          0.
  SM 154     0.          0.          0.          0.          0.          0.
0.          0.          0.          0.
  SM 155     1.579E-05   0.          0.          0.          0.          0.
0.          0.          0.          0.
  SM 156     0.          0.          0.          0.          0.          0.
0.          0.          0.          0.
  TOTAL      6.531E-05   9.161E-11   9.142E-11   9.124E-11   9.106E-11   9.087E-11
9.069E-11   9.051E-11   9.033E-11   9.015E-11


 ORR   FUEL SOURCE, 22.5 MW 156  DAY  BETA POWER AFTER SHUTDOWN - MW
3510.0 MWD IN  156.0 DAYS.
-
-
AT. NO. 63 EU

 ISOTOPE
-              SHUTDOWN 120.0 DAYS 215.0 DAYS 310.0 DAYS   1.1 YRS.   1.4 YRS.
1.6 YRS.    1.9 YRS.    2.2 YRS.    2.4 YRS.
  EU 151     0.          0.          0.          0.          0.          0.
0.          0.          0.          0.
  EU*152     3.765E-08   0.          0.          0.          0.          0.
0.          0.          0.          0.
  EU 152     1.164E-10   1.143E-10   1.128E-10   1.112E-10   1.097E-10   1.082E-10
1.067E-10   1.052E-10   1.038E-10   1.023E-10
  EU 153     0.          0.          0.          0.          0.          0.
0.          0.          0.          0.
  EU 154     8.682E-08   8.559E-08   8.463E-08   8.368E-08   8.275E-08   8.182E-08
8.090E-08   7.999E-08   7.910E-08   7.821E-08
  EU 155     1.003E-07   8.854E-08   8.010E-08   7.247E-08   6.555E-08   5.930E-08
5.364E-08   4.853E-08   4.390E-08   3.972E-08
  EU 156     1.354E-04   5.329E-07   6.602E-09   8.223E-11   1.019E-12   1.262E-14
1.564E-16   1.937E-18   2.413E-20   2.989E-22
  EU 157     1.773E-05   0.          0.          0.          0.          0.
0.          0.          0.          0.
  EU 158     2.254E-05   0.          0.          0.          0.          0.
0.          0.          0.          0.
  EU 159     4.906E-06   0.          0.          0.          0.          0.
0.          0.          0.          0.
  EU 160     1.864E-06   0.          0.          0.          0.          0.
0.          0.          0.          0.
  TOTAL      1.826E-04   7.071E-07   1.714E-07   1.563E-07   1.484E-07   1.412E-07
1.347E-07   1.286E-07   1.231E-07   1.180E-07

                                          GAMMA POWER AFTER SHUTDOWN - MW
  EU 151     0.          0.          0.          0.          0.          0.
0.          0.          0.          0.
  EU*152     1.493E-08   0.          0.          0.          0.          0.
0.          0.          0.          0.
  EU 152     7.404E-10   7.276E-10   7.175E-10   7.076E-10   6.979E-10   6.883E-10
6.788E-10   6.694E-10   6.602E-10   6.511E-10
  EU 153     0.          0.          0.          0.          0.          0.
0.          0.          0.          0.
```

```
  EU 154     5.865E-07  5.782E-07  5.717E-07  5.653E-07  5.590E-07  5.527E-07
5.465E-07  5.404E-07  5.343E-07  5.283E-07
  EU 155     1.571E-07  1.386E-07  1.254E-07  1.134E-07  1.026E-07  9.282E-08
8.396E-08  7.596E-08  6.872E-08  6.216E-08
  EU 156     2.320E-04  9.135E-07  1.132E-08  1.410E-10  1.746E-12  2.164E-14
2.680E-16  3.321E-18  4.136E-20  5.124E-22
  EU 157     2.217E-05  0.         0.         0.         0.         0.
0.         0.         0.         0.
  EU 158     1.300E-05  0.         0.         0.         0.         0.
0.         0.         0.         0.
  EU 159     1.141E-06  0.         0.         0.         0.         0.
0.         0.         0.         0.
  EU 160     0.         0.         0.         0.         0.         0.
0.         0.         0.         0.
  TOTAL      2.691E-04  1.631E-06  7.091E-07  6.796E-07  6.623E-07  6.462E-07
6.311E-07  6.170E-07  6.037E-07  5.911E-07


 ORR   FUEL SOURCE, 22.5 MW 156  DAY  BETA POWER AFTER SHUTDOWN - MW
3510.0 MWD IN  156.0 DAYS.
=
=
AT. NO. 64 GD

 ISOTOPE
=              SHUTDOWN 120.0 DAYS 215.0 DAYS 310.0 DAYS   1.1 YRS.   1.4 YRS.
1.6 YRS.   1.9 YRS.   2.2 YRS.   2.4 YRS.
  GD 152     0.         0.         0.         0.         0.         0.
0.         0.         0.         0.
  GD 154     0.         0.         0.         0.         0.         0.
0.         0.         0.         0.
  GD 155     0.         0.         0.         0.         0.         0.
0.         0.         0.         0.
  GD 156     0.         0.         0.         0.         0.         0.
0.         0.         0.         0.
  GD 157     0.         0.         0.         0.         0.         0.
0.         0.         0.         0.
  GD 158     0.         0.         0.         0.         0.         0.
0.         0.         0.         0.
  GD 159     3.328E-06  0.         0.         0.         0.         0.
0.         0.         0.         0.
  GD 160     0.         0.         0.         0.         0.         0.
0.         0.         0.         0.
  GD 161     4.075E-06  0.         0.         0.         0.         0.
0.         0.         0.         0.
  GD 162     4.608E-08  3.669E-08  3.063E-08  2.558E-08  2.136E-08  1.783E-08
1.489E-08  1.243E-08  1.038E-08  8.666E-09
  TOTAL      7.449E-06  3.669E-08  3.063E-08  2.558E-08  2.136E-08  1.783E-08
1.489E-08  1.243E-08  1.038E-08  8.666E-09

                                        GAMMA POWER AFTER SHUTDOWN - MW
  GD 152     0.         0.         0.         0.         0.         0.
0.         0.         0.         0.
  GD 154     0.         0.         0.         0.         0.         0.
0.         0.         0.         0.
  GD 155     0.         0.         0.         0.         0.         0.
0.         0.         0.         0.
  GD 156     0.         0.         0.         0.         0.         0.
0.         0.         0.         0.
  GD 157     0.         0.         0.         0.         0.         0.
0.         0.         0.         0.
```

```
  GD 158    0.          0.          0.          0.          0.          0.
0.          0.          0.          0.
  GD 159    8.606E-07   0.          0.          0.          0.          0.
0.          0.          0.          0.
  GD 160    0.          0.          0.          0.          0.          0.
0.          0.          0.          0.
  GD 161    2.956E-06   0.          0.          0.          0.          0.
0.          0.          0.          0.
  GD 162    1.355E-07   1.079E-07   9.010E-08   7.524E-08   6.282E-08   5.245E-08
4.379E-08   3.656E-08   3.053E-08   2.549E-08
  TOTAL     3.952E-06   1.079E-07   9.010E-08   7.524E-08   6.282E-08   5.245E-08
4.379E-08   3.656E-08   3.053E-08   2.549E-08


 ORR   FUEL SOURCE, 22.5 MW 156  DAY  BETA POWER AFTER SHUTDOWN - MW
3510.0 MWD IN  156.0 DAYS.
□
AT. NO. 65 TB

 ISOTOPE
□             SHUTDOWN 120.0 DAYS 215.0 DAYS 310.0 DAYS   1.1 YRS.   1.4 YRS.
1.6 YRS.   1.9 YRS.   2.2 YRS.   2.4 YRS.
  TB 159    0.          0.          0.          0.          0.          0.
0.          0.          0.          0.
  TB 160    1.916E-08   6.130E-09   2.487E-09   1.010E-09   4.096E-10   1.662E-10
6.741E-11   2.734E-11   1.110E-11   4.505E-12
  TB 161    1.055E-06   6.126E-12   4.381E-16   3.170E-20   2.267E-24   1.622E-28
1.160E-32   8.294E-37   0.          0.
  TB 162    2.274E-07   1.813E-07   1.514E-07   1.264E-07   1.056E-07   8.813E-08
7.358E-08   6.143E-08   5.130E-08   4.283E-08
  TB 163    2.489E-07   0.          0.          0.          0.          0.
0.          0.          0.          0.
  TOTAL     1.551E-06   1.875E-07   1.539E-07   1.274E-07   1.060E-07   8.830E-08
7.365E-08   6.146E-08   5.131E-08   4.283E-08

                                        GAMMA POWER AFTER SHUTDOWN - MW
  TB 159    0.          0.          0.          0.          0.          0.
0.          0.          0.          0.
  TB 160    1.143E-07   3.656E-08   1.483E-08   6.023E-09   2.443E-09   9.912E-10
4.021E-10   1.631E-10   6.624E-11   2.687E-11
  TB 161    2.603E-07   1.511E-12   1.081E-16   7.820E-21   5.593E-25   4.000E-29
2.861E-33   2.046E-37   0.          0.
  TB 162    0.          0.          0.          0.          0.          0.
0.          0.          0.          0.
  TB 163    4.081E-08   0.          0.          0.          0.          0.
0.          0.          0.          0.
  TOTAL     4.154E-07   3.657E-08   1.483E-08   6.023E-09   2.443E-09   9.912E-10
4.021E-10   1.631E-10   6.624E-11   2.687E-11


 ORR   FUEL SOURCE, 22.5 MW 156  DAY  BETA POWER AFTER SHUTDOWN - MW
3510.0 MWD IN  156.0 DAYS.
□
AT. NO. 66 DY

 ISOTOPE
□             SHUTDOWN 120.0 DAYS 215.0 DAYS 310.0 DAYS   1.1 YRS.   1.4 YRS.
1.6 YRS.   1.9 YRS.   2.2 YRS.   2.4 YRS.
```

```
  DY 160    0.          0.          0.          0.          0.          0.
0.          0.          0.          0.
  DY 161    0.          0.          0.          0.          0.          0.
0.          0.          0.          0.
  DY 162    0.          0.          0.          0.          0.          0.
0.          0.          0.          0.
  DY 163    0.          0.          0.          0.          0.          0.
0.          0.          0.          0.
  DY 164    0.          0.          0.          0.          0.          0.
0.          0.          0.          0.
  DY*165    1.220E-09   0.          0.          0.          0.          0.
0.          0.          0.          0.
  DY 165    7.642E-08   0.          0.          0.          0.          0.
0.          0.          0.          0.
  DY 166    4.150E-09   5.996E-20   1.569E-28   4.206E-37   0.          0.
0.          0.          0.          0.
  TOTAL     8.179E-08   5.996E-20   1.569E-28   4.206E-37   0.          0.
0.          0.          0.          0.

                                        GAMMA POWER AFTER SHUTDOWN - MW
  DY 160    0.          0.          0.          0.          0.          0.
0.          0.          0.          0.
  DY 161    0.          0.          0.          0.          0.          0.
0.          0.          0.          0.
  DY 162    0.          0.          0.          0.          0.          0.
0.          0.          0.          0.
  DY 163    0.          0.          0.          0.          0.          0.
0.          0.          0.          0.
  DY 164    0.          0.          0.          0.          0.          0.
0.          0.          0.          0.
  DY*165    1.743E-08   0.          0.          0.          0.          0.
0.          0.          0.          0.
  DY 165    4.672E-09   0.          0.          0.          0.          0.
0.          0.          0.          0.
  DY 166    3.043E-09   4.397E-20   1.151E-28   3.085E-37   0.          0.
0.          0.          0.          0.
  TOTAL     2.515E-08   4.397E-20   1.151E-28   3.085E-37   0.          0.
0.          0.          0.          0.


 ORR   FUEL SOURCE, 22.5 MW 156  DAY  BETA POWER AFTER SHUTDOWN - MW
3510.0 MWD IN  156.0 DAYS.

AT. NO. 67 HO

 ISOTOPE
              SHUTDOWN 120.0 DAYS 215.0 DAYS 310.0 DAYS   1.1 YRS.   1.4 YRS.
1.6 YRS.   1.9 YRS.   2.2 YRS.   2.4 YRS.
  HO 165    0.          0.          0.          0.          0.          0.
0.          0.          0.          0.
  HO 166    2.595E-08   5.072E-19   1.327E-27   3.558E-36   0.          0.
0.          0.          0.          0.
  TOTAL     2.595E-08   5.072E-19   1.327E-27   3.558E-36   0.          0.
0.          0.          0.          0.

                                        GAMMA POWER AFTER SHUTDOWN - MW
  HO 165    0.          0.          0.          0.          0.          0.
0.          0.          0.          0.
  HO 166    2.161E-09   4.224E-20   1.105E-28   2.963E-37   0.          0.
0.          0.          0.          0.
```

```
  TOTAL      2.161E-09  4.224E-20  1.105E-28  2.963E-37  0.         0.
0.         0.         0.         0.


 ORR   FUEL SOURCE, 22.5 MW 156  DAY  BETA POWER AFTER SHUTDOWN - MW
3510.0 MWD IN  156.0 DAYS.
□
AT. NO. 68 ER

 ISOTOPE
□              SHUTDOWN 120.0 DAYS 215.0 DAYS 310.0 DAYS   1.1 YRS.   1.4 YRS.
1.6 YRS.   1.9 YRS.   2.2 YRS.   2.4 YRS.
  ER 166     0.         0.         0.         0.         0.         0.
0.         0.         0.         0.
  ER*167     0.         0.         0.         0.         0.         0.
0.         0.         0.         0.
  ER 167     0.         0.         0.         0.         0.         0.
0.         0.         0.         0.
  TOTAL      0.         0.         0.         0.         0.         0.
0.         0.         0.         0.

                                        GAMMA POWER AFTER SHUTDOWN - MW
  ER 166     0.         0.         0.         0.         0.         0.
0.         0.         0.         0.
  ER*167     4.267E-13  0.         0.         0.         0.         0.
0.         0.         0.         0.
  ER 167     0.         0.         0.         0.         0.         0.
0.         0.         0.         0.
  TOTAL      4.267E-13  0.         0.         0.         0.         0.
0.         0.         0.         0.


 ORR   FUEL SOURCE, 22.5 MW 156  DAY  BETA POWER AFTER SHUTDOWN - MW
3510.0 MWD IN  156.0 DAYS.
□
SUMMARY

 ELEMENT
□              SHUTDOWN 120.0 DAYS 215.0 DAYS 310.0 DAYS   1.1 YRS.   1.4 YRS.
1.6 YRS.   1.9 YRS.   2.2 YRS.   2.4 YRS.
 30 ZN       1.438E-07  1.923E-27  0.         0.         0.         0.
0.         0.         0.         0.
 31 GA       2.306E-06  9.891E-27  0.         0.         0.         0.
0.         0.         0.         0.
 32 GE       8.521E-06  0.         0.         0.         0.         0.
0.         0.         0.         0.
 33 AS       8.175E-04  9.078E-29  0.         0.         0.         0.
0.         0.         0.         0.
 34 SE       1.173E-02  5.715E-12  5.715E-12  5.715E-12  5.715E-12  5.715E-12
5.715E-12  5.715E-12  5.715E-12  5.715E-12
 35 BR       2.592E-02  1.137E-32  0.         0.         0.         0.
0.         0.         0.         0.
 36 KR       5.948E-02  1.969E-06  1.936E-06  1.904E-06  1.872E-06  1.841E-06
1.810E-06  1.780E-06  1.751E-06  1.722E-06
 37 RB       1.134E-01  6.737E-09  1.990E-10  5.902E-12  1.743E-13  5.149E-15
1.521E-16  4.491E-18  1.332E-19  3.935E-21
 38 SR       7.098E-02  4.506E-04  1.353E-04  4.646E-05  2.132E-05  1.418E-05
1.212E-05  1.148E-05  1.125E-05  1.114E-05
```

39 Y	6.319E-02	7.382E-04	2.784E-04	1.277E-04	7.801E-05	6.151E-05
5.587E-05	5.380E-05	5.289E-05	5.237E-05			
40 ZR	1.103E-02	1.891E-04	6.866E-05	2.496E-05	9.060E-06	3.289E-06
1.194E-06	4.334E-07	1.576E-07	5.722E-08			
41 NB	4.572E-02	1.160E-04	4.864E-05	1.868E-05	6.932E-06	2.540E-06
9.255E-07	3.365E-07	1.224E-07	4.445E-08			
42 MO	1.663E-02	2.048E-16	8.123E-27	3.317E-37	0.	0.
0.	0.	0.	0.			
43 TC	2.499E-02	8.058E-10	8.058E-10	8.058E-10	8.058E-10	8.058E-10
8.058E-10	8.058E-10	8.058E-10	8.058E-10			
44 RU	1.979E-03	3.568E-05	9.050E-06	3.562E-06	2.202E-06	1.690E-06
1.382E-06	1.148E-06	9.578E-07	7.995E-07			
45 RH	4.423E-03	4.739E-04	3.956E-04	3.304E-04	2.758E-04	2.303E-04
1.923E-04	1.605E-04	1.340E-04	1.119E-04			
46 PD	4.229E-04	2.003E-14	2.003E-14	2.003E-14	2.003E-14	2.003E-14
2.003E-14	2.003E-14	2.003E-14	2.003E-14			
47 AG	2.561E-04	1.025E-08	7.427E-09	5.767E-09	4.476E-09	3.474E-09
2.697E-09	2.093E-09	1.625E-09	1.262E-09			
48 CD	2.659E-05	5.056E-08	1.093E-08	2.368E-09	5.132E-10	1.121E-10
2.544E-11	6.681E-12	2.613E-12	1.717E-12			
49 IN	4.603E-05	9.299E-16	2.491E-16	6.682E-17	1.790E-17	4.795E-18
1.284E-18	3.440E-19	9.229E-20	2.472E-20			
50 SN	1.170E-02	1.083E-07	6.202E-08	3.794E-08	2.369E-08	1.527E-08
1.029E-08	7.339E-09	5.590E-09	4.547E-09			
51 SB	5.144E-02	3.681E-07	3.430E-07	3.206E-07	2.998E-07	2.804E-07
2.623E-07	2.454E-07	2.296E-07	2.147E-07			
52 TE	2.073E-02	1.890E-05	4.441E-06	1.605E-06	7.525E-07	3.876E-07
2.051E-07	1.093E-07	5.836E-08	3.116E-08			
53 I	4.972E-02	2.296E-08	7.450E-12	1.032E-12	1.031E-12	1.031E-12
1.031E-12	1.031E-12	1.031E-12	1.031E-12			
54 XE	5.220E-02	1.252E-10	4.674E-16	1.772E-21	6.617E-27	2.471E-32
9.227E-38	0.	0.	0.			
55 CS	8.958E-02	1.550E-05	1.527E-05	1.506E-05	1.486E-05	1.468E-05
1.450E-05	1.433E-05	1.417E-05	1.402E-05			
56 BA	3.500E-02	3.004E-06	1.749E-08	1.025E-10	5.973E-13	3.479E-15
2.026E-17	1.180E-19	6.918E-22	4.029E-24			
57 LA	3.865E-02	5.529E-06	3.221E-08	1.888E-10	1.100E-12	6.404E-15
3.730E-17	2.173E-19	1.274E-21	7.418E-24			
58 CE	1.036E-02	1.907E-04	1.022E-04	7.468E-05	5.841E-05	4.625E-05
3.669E-05	2.912E-05	2.312E-05	1.835E-05			
59 PR	1.749E-02	1.782E-03	1.410E-03	1.119E-03	8.882E-04	7.050E-04
5.595E-04	4.441E-04	3.525E-04	2.798E-04			
60 ND	1.889E-03	3.508E-07	9.292E-10	2.479E-12	6.566E-15	1.739E-17
4.606E-20	1.220E-22	3.254E-25	8.620E-28			
61 PM	1.385E-03	1.620E-05	1.438E-05	1.328E-05	1.237E-05	1.154E-05
1.077E-05	1.005E-05	9.381E-06	8.757E-06			
62 SM	2.025E-04	4.351E-09	4.343E-09	4.334E-09	4.325E-09	4.317E-09
4.308E-09	4.299E-09	4.291E-09	4.282E-09			
63 EU	1.826E-04	7.071E-07	1.714E-07	1.563E-07	1.484E-07	1.412E-07
1.347E-07	1.286E-07	1.231E-07	1.180E-07			
64 GD	7.449E-06	3.669E-08	3.063E-08	2.558E-08	2.136E-08	1.783E-08
1.489E-08	1.243E-08	1.038E-08	8.666E-09			
65 TB	1.551E-06	1.875E-07	1.539E-07	1.274E-07	1.060E-07	8.830E-08
7.365E-08	6.146E-08	5.131E-08	4.283E-08			
66 DY	8.179E-08	5.996E-20	1.569E-28	4.206E-37	0.	0.
0.	0.	0.	0.			
67 HO	2.595E-08	5.072E-19	1.327E-27	3.558E-36	0.	0.
0.	0.	0.	0.			
68 ER	0.	0.	0.	0.	0.	0.
0.	0.	0.	0.			

```
 92 U 239    8.195E-04  0.          0.          0.          0.          0.
0.          0.          0.          0.
 93 NP239    1.870E-04  8.011E-20  5.422E-32  0.          0.          0.
0.          0.          0.          0.
  TOTAL      8.326E-01  4.039E-03  2.485E-03  1.778E-03  1.370E-03  1.094E-03
8.877E-04  7.276E-04  6.009E-04  4.994E-04

 SUBTOTALS --

 NOBLES       1.117E-01  1.969E-06  1.936E-06  1.904E-06  1.872E-06  1.841E-06
1.810E-06  1.780E-06  1.751E-06  1.722E-06
 HALOGENS     7.564E-02  2.296E-08  7.450E-12  1.032E-12  1.031E-12  1.031E-12
1.031E-12  1.031E-12  1.031E-12  1.031E-12
 VOLATILES    3.043E-01  3.477E-05  2.005E-05  1.699E-05  1.592E-05  1.535E-05
1.497E-05  1.469E-05  1.446E-05  1.426E-05
 OTHERS       3.409E-01  4.002E-03  2.463E-03  1.759E-03  1.353E-03  1.077E-03
8.710E-04  7.112E-04  5.846E-04  4.834E-04
 TOTAL LESS
   NOBLES     7.209E-01  4.037E-03  2.483E-03  1.776E-03  1.369E-03  1.092E-03
8.859E-04  7.258E-04  5.991E-04  4.977E-04


 ORR   FUEL SOURCE, 22.5 MW 156  DAY
3510.0 MWD IN  156.0 DAYS
-
-
SUMMARY

                                        GAMMA POWER AFTER SHUTDOWN - MW

 ELEMENT
-              SHUTDOWN 120.0 DAYS 215.0 DAYS 310.0 DAYS   1.1 YRS.   1.4 YRS.
1.6 YRS.   1.9 YRS.   2.2 YRS.   2.4 YRS.
 30 ZN       8.702E-08  1.980E-26  0.          0.          0.          0.
0.          0.          0.          0.
 31 GA       1.660E-06  6.599E-26  0.          0.          0.          0.
0.          0.          0.          0.
 32 GE       7.628E-06  0.          0.          0.          0.          0.
0.          0.          0.          0.
 33 AS       2.046E-03  9.078E-30  0.          0.          0.          0.
0.          0.          0.          0.
 34 SE       2.065E-04  0.          0.          0.          0.          0.
0.          0.          0.          0.
 35 BR       1.138E-02  2.151E-31  0.          0.          0.          0.
0.          0.          0.          0.
 36 KR       3.186E-02  3.150E-08  3.098E-08  3.046E-08  2.996E-08  2.946E-08
2.897E-08  2.849E-08  2.801E-08  2.755E-08
 37 RB       3.725E-02  9.901E-10  2.924E-11  8.674E-13  2.562E-14  7.567E-16
2.235E-17  6.601E-19  1.958E-20  5.783E-22
 38 SR       1.636E-02  1.513E-07  4.265E-08  1.204E-08  3.391E-09  9.556E-10
2.693E-10  7.588E-11  2.141E-11  6.034E-12
 39  Y       1.551E-02  4.636E-06  1.523E-06  5.094E-07  1.779E-07  6.958E-08
3.415E-08  2.250E-08  1.863E-08  1.728E-08
 40 ZR       5.606E-03  1.147E-03  4.166E-04  1.514E-04  5.496E-05  1.995E-05
7.243E-06  2.629E-06  9.557E-07  3.469E-07
 41 NB       2.651E-02  2.057E-03  8.626E-04  3.311E-04  1.229E-04  4.503E-05
1.641E-05  5.966E-06  2.170E-06  7.879E-07
 42 MO       2.236E-02  6.195E-17  2.457E-27  1.003E-37  0.          0.
0.          0.          0.          0.
 43 TC       1.594E-02  7.194E-17  2.853E-27  1.165E-37  0.          0.
0.          0.          0.          0.
```

44 RU	4.027E-03	2.502E-04	4.821E-05	9.309E-06	1.794E-06	3.457E-07
6.661E-08	1.284E-08	2.479E-09	4.776E-10			
45 RH	2.284E-03	9.557E-05	6.667E-05	5.315E-05	4.389E-05	3.655E-05
3.049E-05	2.546E-05	2.126E-05	1.775E-05			
46 PD	1.754E-04	0.	0.	0.	0.	0.
0.	0.	0.	0.			
47 AG	1.418E-04	2.820E-07	2.188E-07	1.699E-07	1.319E-07	1.024E-07
7.947E-08	6.168E-08	4.789E-08	3.718E-08			
48 CD	1.706E-05	2.984E-09	6.449E-10	1.397E-10	3.019E-11	6.529E-12
1.413E-12	3.075E-13	6.853E-14	1.673E-14			
49 IN	4.474E-05	2.316E-16	6.203E-17	1.664E-17	4.458E-18	1.194E-18
3.198E-19	8.567E-20	2.298E-20	6.157E-21			
50 SN	1.766E-03	2.600E-08	1.886E-08	1.411E-08	1.064E-08	8.073E-09
6.168E-09	4.740E-09	3.666E-09	2.853E-09			
51 SB	5.229E-03	1.591E-06	1.483E-06	1.386E-06	1.296E-06	1.212E-06
1.133E-06	1.060E-06	9.918E-07	9.277E-07			
52 TE	1.276E-02	1.285E-05	2.607E-06	8.651E-07	4.362E-07	2.724E-07
1.910E-07	1.457E-07	1.188E-07	1.018E-07			
53 I	7.002E-02	5.089E-08	1.505E-11	8.285E-13	8.246E-13	8.246E-13
8.246E-13	8.246E-13	8.246E-13	8.246E-13			
54 XE	1.387E-02	1.373E-08	5.746E-11	2.394E-13	9.896E-16	4.090E-18
1.691E-20	6.988E-23	2.908E-25	1.202E-27			
55 CS	2.010E-02	1.656E-05	1.497E-05	1.374E-05	1.260E-05	1.157E-05
1.061E-05	9.740E-06	8.939E-06	8.203E-06			
56 BA	5.559E-03	4.437E-05	4.191E-05	4.165E-05	4.140E-05	4.115E-05
4.090E-05	4.066E-05	4.041E-05	4.017E-05			
57 LA	3.071E-02	2.843E-05	1.656E-07	9.706E-10	5.653E-12	3.293E-14
1.918E-16	1.117E-18	6.548E-21	3.814E-23			
58 CE	4.215E-03	9.366E-05	4.125E-05	2.839E-05	2.196E-05	1.735E-05
1.376E-05	1.092E-05	8.668E-06	6.880E-06			
59 PR	5.957E-03	4.513E-05	3.582E-05	2.844E-05	2.257E-05	1.791E-05
1.422E-05	1.128E-05	8.958E-06	7.109E-06			
60 ND	1.783E-03	2.990E-07	7.918E-10	2.112E-12	5.595E-15	1.482E-17
3.925E-20	1.040E-22	2.773E-25	7.346E-28			
61 PM	1.614E-03	3.018E-06	6.054E-07	1.217E-07	2.441E-08	4.896E-09
9.822E-10	1.970E-10	3.960E-11	7.944E-12			
62 SM	6.531E-05	9.161E-11	9.142E-11	9.124E-11	9.106E-11	9.087E-11
9.069E-11	9.051E-11	9.033E-11	9.015E-11			
63 EU	2.691E-04	1.631E-06	7.091E-07	6.796E-07	6.623E-07	6.462E-07
6.311E-07	6.170E-07	6.037E-07	5.911E-07			
64 GD	3.952E-06	1.079E-07	9.010E-08	7.524E-08	6.282E-08	5.245E-08
4.379E-08	3.656E-08	3.053E-08	2.549E-08			
65 TB	4.154E-07	3.657E-08	1.483E-08	6.023E-09	2.443E-09	9.912E-10
4.021E-10	1.631E-10	6.624E-11	2.687E-11			
66 DY	2.515E-08	4.397E-20	1.151E-28	3.085E-37	0.	0.
0.	0.	0.	0.			
67 HO	2.161E-09	4.224E-20	1.105E-28	2.963E-37	0.	0.
0.	0.	0.	0.			
68 ER	4.267E-13	0.	0.	0.	0.	0.
0.	0.	0.	0.			
92 U 239	1.503E-04	0.	0.	0.	0.	0.
0.	0.	0.	0.			
93 NP239	8.208E-04	3.516E-19	2.379E-31	0.	0.	0.
0.	0.	0.	0.			
TOTAL	3.666E-01	3.803E-03	1.535E-03	6.611E-04	3.249E-04	1.922E-04
1.359E-04	1.086E-04	9.321E-05	8.298E-05			

SUBTOTALS --

NOBLES	4.574E-02	4.523E-08	3.103E-08	3.046E-08	2.996E-08	2.946E-08
2.897E-08	2.849E-08	2.801E-08	2.755E-08			

```
 HALOGENS     8.140E-02  5.089E-08  1.505E-11  8.285E-13  8.246E-13  8.246E-13
8.246E-13  8.246E-13  8.246E-13  8.246E-13
 VOLATILES    9.996E-02  3.099E-05  1.906E-05  1.599E-05  1.434E-05  1.305E-05
1.194E-05  1.095E-05  1.005E-05  9.233E-06
 OTHERS       1.395E-01  3.772E-03  1.516E-03  6.451E-04  3.105E-04  1.792E-04
1.239E-04  9.767E-05  8.313E-05  7.372E-05
 TOTAL LESS
   NOBLES     3.209E-01  3.803E-03  1.535E-03  6.611E-04  3.249E-04  1.922E-04
1.358E-04  1.086E-04  9.318E-05  8.295E-05


                                        ISOTOPE SELECTION DATA


  ISOTOPES CONSIDERED ARE
                                                                   VALUES
REPRESENT A WEIGHTING FACTOR
                             ALL     1.000E 00


          SHIELD COMPOSITION  GR/CC          1           2           3
4           5

           URANIUM                        4.650E-02   0.          0.
0.          0.

           LEAD                           0.          0.          1.134E 01
0.          0.

           IRON                           3.790E 00   7.800E 00   0.
7.800E 00   0.

          MASS ABSORPTION COEFFICIENTS  (LAST REGION IS AIR)
                                          1.718E 02   3.445E 02   8.201E 02
3.445E 02   4.424E-03   0.
                                          4.893E 01   9.576E 01   5.415E 02
9.576E 01   6.542E-04   0.
                                          2.262E 01   4.434E 01   1.928E 02
4.434E 01   3.504E-04   0.
                                          1.050E 01   2.055E 01   9.202E 01
2.055E 01   2.715E-04   0.
                                          5.806E 00   1.135E 01   5.262E 01
1.135E 01   2.405E-04   0.
                                          3.871E 00   7.574E 00   3.489E 01
7.574E 00   2.247E-04   0.
                                          2.759E 00   5.405E 00   2.419E 01
5.405E 00   2.137E-04   0.
                                          1.996E 00   3.918E 00   2.507E 01
3.918E 00   2.049E-04   0.
                                          1.581E 00   3.111E 00   2.853E 01
3.111E 00   1.985E-04   0.
                                          8.716E-01   1.591E 00   1.564E 01
1.591E 00   1.725E-04   0.
                                          5.526E-01   1.069E 00   6.339E 00
1.069E 00   1.474E-04   0.
                                          3.963E-01   7.784E-01   3.476E 00
7.784E-01   1.312E-04   0.
                                          3.422E-01   6.825E-01   2.013E 00
6.825E-01   1.183E-04   0.
```

5.616E-01	1.118E-04	0.
4.969E-01	8.986E-05	0.
4.586E-01	8.210E-05	0.
4.001E-01	7.408E-05	0.
3.666E-01	6.658E-05	0.
3.479E-01	6.180E-05	0.
3.237E-01	5.818E-05	0.
3.136E-01	5.495E-05	0.
2.972E-01	5.262E-05	0.
2.948E-01	5.004E-05	0.
2.855E-01	4.784E-05	0.
2.769E-01	4.383E-05	0.
2.793E-01	5.616E-01	1.452E 00
2.460E-01	4.969E-01	9.923E-01
2.266E-01	4.586E-01	8.233E-01
1.975E-01	4.001E-01	7.008E-01
1.807E-01	3.666E-01	6.056E-01
1.714E-01	3.479E-01	5.534E-01
1.595E-01	3.237E-01	5.250E-01
1.545E-01	3.136E-01	5.024E-01
1.465E-01	2.972E-01	4.854E-01
1.453E-01	2.948E-01	4.751E-01
1.407E-01	2.855E-01	4.683E-01
1.366E-01	2.769E-01	4.661E-01

GAMMA ATTENUATION CALCULATION ORR FUEL DUMMY POINT SOURCE FOR SOURCE TERM, 98319 MWD/T, 20% ENRICHED

SOURCE SHIELDS DIST TO DETECTOR 6.160E 01 CM.
POINT SLAB

REACTOR DATA ORR FUEL SOURCE, 22.5 MW 156 DAY 3510.0 MWD IN 156.0 DAYS 0. SEC. AFTER SHUTDOWN

TAYLOR BUILDUP DATA FOR SHIELD 3 WITH EFFECTIVE ATOMIC NUMBER OF 82.0 USED

SHIELD THICKNESS 3.095E 01 2.390E 00 1.016E 01 7.620E 00

GROUP	TOTAL GROUP ENERGY FLUX AT DOSE POINT MEV/CMS/SEC	DOSE RATE PRODUCTION RATE AT DOSE POINT PHOTONS ROENTGENS/HOUR	GROUP BREMSSTRAHLUNG PHOTONS	GROUP AVERAGE ENERGY MEV
1	1.207E-28	2.570E 17 9.932E-33	2.566E 17	1.500E-02
2	1.329E-28	1.646E 17 2.300E-33	1.620E 17	2.500E-02
3	1.396E-28	1.185E 17 8.867E-34	1.139E 17	3.500E-02
4	1.418E-28	8.987E 16 4.650E-34	8.780E 16	4.500E-02
5	1.651E-28	8.295E 16 3.780E-34	7.267E 16	5.500E-02
6	2.112E-28	8.772E 16 3.994E-34	6.274E 16	6.500E-02
7	1.583E-28	5.570E 16 2.714E-34	5.502E 16	7.500E-02

8	7.447E 16	4.850E 16	8.500E-02	2.454E-28 3.968E-34
9	4.855E 16	4.359E 16	9.500E-02	1.828E-28 2.930E-34
10	2.634E 17	2.697E 16	1.500E-01	9.157E-27 1.582E-32
11	2.007E 17	1.303E 16	2.500E-01	7.398E-27 1.450E-32
12	1.888E 17	7.751E 15	3.500E-01	4.886E-12 1.006E-17
13	3.645E 17	4.654E 15	4.750E-01	6.035E-04 1.231E-09
14	3.820E 17	2.728E 15	6.500E-01	5.307E 00 1.104E-05
15	3.336E 17	1.728E 15	8.250E-01	5.083E 03 1.017E-02
16	1.602E 17	1.153E 15	1.000E 00	4.551E 04 8.783E-02
17	1.732E 17	7.214E 14	1.225E 00	8.742E 05 1.609E 00
18	2.440E 17	4.405E 14	1.475E 00	9.079E 06 1.598E 01
19	2.679E 16	2.871E 14	1.700E 00	3.158E 06 5.401E 00
20	5.374E 16	1.988E 14	1.900E 00	1.836E 07 3.047E 01
21	3.331E 16	1.386E 14	2.100E 00	2.053E 07 3.286E 01
22	2.619E 16	9.683E 13	2.300E 00	3.135E 07 4.828E 01
23	3.339E 16	6.807E 13	2.500E 00	4.705E 07 7.152E 01
24	2.114E 16	4.810E 13	2.700E 00	4.410E 07 6.527E 01
25	5.387E 16	2.892E 13	3.000E 00	1.608E 08 2.300E 02
TOTAL	3.538E 18	9.628E 17		3.354E 08 5.014E 02

GAMMA ATTENUATION CALCULATION ORR FUEL DUMMY POINT SOURCE FOR SOURCE TERM, 98319 MWD/T, 20% ENRICHED

SOURCE SHIELDS DIST TO DETECTOR 6.160E 01 CM.
POINT SLAB

REACTOR DATA ORR FUEL SOURCE, 22.5 MW 156 DAY 3510.0 MWD IN 156.0 DAYS 120.0 DAYS AFTER SHUTDOWN

TAYLOR BUILDUP DATA FOR SHIELD 3 WITH EFFECTIVE ATOMIC NUMBER OF 82.0 USED

SHIELD THICKNESS 3.095E 01 2.390E 00 1.016E 01 7.620E 00

GROUP	TOTAL GROUP	GROUP	GROUP
ENERGY FLUX	DOSE RATE		
	PRODUCTION RATE	BREMSSTRAHLUNG	AVERAGE ENERGY
AT DOSE POINT	AT DOSE POINT		
	PHOTONS	PHOTONS	MEV
MEV/CMS/SEC	ROENTGENS/HOUR		

1	6.411E 13	6.411E 13	1.500E-02	3.011E-32
	2.478E-36			
2	7.979E 13	4.208E 13	2.500E-02	6.444E-32
	1.115E-36			
3	3.646E 13	2.906E 13	3.500E-02	4.298E-32
	2.729E-37			
4	1.487E 14	2.124E 13	4.500E-02	2.346E-31
	7.696E-37			
5	1.689E 13	1.665E 13	5.500E-02	3.360E-32
	7.694E-38			
6	1.352E 13	1.352E 13	6.500E-02	3.255E-32
	6.156E-38			
7	1.119E 13	1.119E 13	7.500E-02	3.180E-32
	5.450E-38			
8	1.953E 14	9.082E 12	8.500E-02	6.436E-31
	1.041E-36			
9	1.010E 13	7.432E 12	9.500E-02	3.802E-32
	6.094E-38			
10	2.495E 15	3.281E 12	1.500E-01	8.673E-29
	1.499E-34			
11	2.138E 14	1.161E 12	2.500E-01	7.879E-30
	1.544E-35			
12	2.034E 13	5.320E 11	3.500E-01	5.262E-16
	1.084E-21			
13	3.375E 15	2.350E 11	4.750E-01	5.589E-06
	1.140E-11			
14	6.208E 15	9.045E 10	6.500E-01	8.624E-02
	1.794E-07			
15	2.173E 16	3.355E 10	8.250E-01	3.311E 02
	6.622E-04			
16	4.819E 13	1.043E 10	1.000E 00	1.369E 01
	2.642E-05			
17	3.536E 13	1.122E 09	1.225E 00	1.785E 02
	3.284E-04			
18	1.065E 14	4.377E 06	1.475E 00	3.963E 03
	6.976E-03			
19	9.129E 10	7.730E-01	1.700E 00	1.076E 01
	1.840E-05			
20	3.329E 11	9.573E-02	1.900E 00	1.137E 02
	1.887E-04			
21	6.400E 13	1.157E-03	2.100E 00	3.946E 04
	6.313E-02			
22	2.113E 12	5.800E-23	2.300E 00	2.529E 03
	3.895E-03			
23	2.157E 12	0.	2.500E 00	3.040E 03
	4.620E-03			
24	5.298E 01	0.	2.700E 00	1.105E-07
	1.636E-13			
25	7.910E 10	0.	3.000E 00	2.361E 02
	3.377E-04			
TOTAL	3.488E 16	2.197E 14		4.987E 04
	8.019E-02			

GAMMA ATTENUATION CALCULATION ORR FUEL DUMMY POINT SOURCE FOR SOURCE TERM, 98319 MWD/T, 20% ENRICHED

SOURCE SHIELDS DIST TO DETECTOR 6.160E 01 CM.
POINT SLAB

REACTOR DATA ORR FUEL SOURCE, 22.5 MW 156 DAY 3510.0 MWD IN 156.0 DAYS 215.0 DAYS AFTER SHUTDOWN

TAYLOR BUILDUP DATA FOR SHIELD 3 WITH EFFECTIVE ATOMIC NUMBER OF 82.0 USED

SHIELD THICKNESS 3.095E 01 2.390E 00 1.016E 01 7.620E 00

GROUP	TOTAL GROUP DOSE RATE PRODUCTION RATE AT DOSE POINT PHOTONS ROENTGENS/HOUR	GROUP BREMSSTRAHLUNG PHOTONS	GROUP AVERAGE ENERGY MEV	ENERGY FLUX AT DOSE POINT MEV/CMS/SEC
1	3.812E 13	3.812E 13	1.500E-02	1.790E-32 1.473E-36
2	3.194E 13	2.661E 13	2.500E-02	2.579E-32 4.462E-37
3	1.771E 13	1.713E 13	3.500E-02	2.088E-32 1.326E-37
4	3.594E 13	1.137E 13	4.500E-02	5.670E-32 1.860E-37
5	8.588E 12	8.460E 12	5.500E-02	1.709E-32 3.913E-38
6	6.512E 12	6.510E 12	6.500E-02	1.568E-32 2.965E-38
7	5.328E 12	5.328E 12	7.500E-02	1.514E-32 2.596E-38
8	1.520E 14	4.200E 12	8.500E-02	5.009E-31 8.099E-37
9	3.450E 12	3.442E 12	9.500E-02	1.299E-32 2.082E-38
10	9.948E 14	1.431E 12	1.500E-01	3.459E-29 5.977E-35
11	7.691E 13	4.154E 11	2.500E-01	2.835E-30 5.556E-36
12	5.701E 11	1.457E 11	3.500E-01	1.475E-17 3.039E-23
13	9.469E 14	4.932E 10	4.750E-01	1.568E-06 3.199E-12
14	2.890E 15	1.617E 10	6.500E-01	4.014E-02 8.349E-08
15	8.871E 15	5.467E 09	8.250E-01	1.351E 02 2.703E-04
16	2.949E 13	1.508E 09	1.000E 00	8.376E 00 1.617E-05
17	1.783E 13	1.525E 08	1.225E 00	8.999E 01 1.656E-04
18	2.850E 13	5.947E 05	1.475E 00	1.060E 03 1.866E-03
19	8.298E 10	1.221E-09	1.700E 00	9.782E 00 1.673E-05
20	4.121E 09	1.512E-10	1.900E 00	1.408E 00 2.337E-06
21	5.050E 13	1.828E-12	2.100E 00	3.113E 04 4.981E-02
22	1.764E 12	0.	2.300E 00	2.111E 03 3.252E-03
23	1.256E 10	0.	2.500E 00	1.771E 01 2.691E-05

24	8.371E-08	0.	2.700E 00	1.746E-16
25	4.607E 08	0.	3.000E 00	1.375E 00
TOTAL	1.421E 16	1.232E 14		3.457E 04

GAMMA ATTENUATION CALCULATION ORR FUEL DUMMY POINT SOURCE FOR SOURCE TERM, 98319 MWD/T, 20% ENRICHED

SOURCE SHIELDS DIST TO DETECTOR 6.160E 01 CM.
POINT SLAB

REACTOR DATA ORR FUEL SOURCE, 22.5 MW 156 DAY 3510.0 MWD IN 156.0 DAYS 310.0 DAYS AFTER SHUTDOWN

TAYLOR BUILDUP DATA FOR SHIELD 3 WITH EFFECTIVE ATOMIC NUMBER OF 82.0 USED

SHIELD THICKNESS 3.095E 01 2.390E 00 1.016E 01 7.620E 00

GROUP	TOTAL GROUP DOSE RATE PRODUCTION RATE AT DOSE POINT PHOTONS ROENTGENS/HOUR	GROUP BREMSSTRAHLUNG PHOTONS	GROUP AVERAGE ENERGY MEV	ENERGY FLUX AT DOSE POINT MEV/CMS/SEC
1	3.274E 13	3.274E 13	1.500E-02	1.537E-32
2	2.400E 13	2.311E 13	2.500E-02	1.939E-32
3	1.501E 13	1.448E 13	3.500E-02	1.769E-32
4	1.410E 13	9.357E 12	4.500E-02	2.224E-32
5	6.995E 12	6.926E 12	5.500E-02	1.392E-32
6	5.209E 12	5.207E 12	6.500E-02	1.254E-32
7	4.247E 12	4.247E 12	7.500E-02	1.207E-32
8	1.210E 14	3.317E 12	8.500E-02	3.988E-31
9	2.714E 12	2.713E 12	9.500E-02	1.022E-32
10	6.610E 14	1.100E 12	1.500E-01	2.298E-29
11	2.811E 13	2.906E 11	2.500E-01	1.036E-30
12	3.404E 11	8.600E 10	3.500E-01	8.809E-18
13	4.431E 14	2.281E 10	4.750E-01	7.337E-07
14	1.679E 15	6.046E 09	6.500E-01	2.332E-02
15	3.402E 15	1.646E 09	8.250E-01	5.182E 01
16	2.401E 13	2.958E 08	1.000E 00	6.821E 00

17	1.162E 13	2.077E 07	1.225E 00	5.866E 01	1.079E-04
18	2.228E 13	8.102E 04	1.475E 00	8.290E 02	1.459E-03
19	7.961E 10	1.978E-18	1.700E 00	9.385E 00	1.605E-05
20	5.133E 07	2.449E-19	1.900E 00	1.753E-02	2.910E-08
21	4.008E 13	2.961E-21	2.100E 00	2.471E 04	3.954E-02
22	1.473E 12	0.	2.300E 00	1.763E 03	2.715E-03
23	7.365E 07	0.	2.500E 00	1.038E-01	1.577E-07
24	1.355E-16	0.	2.700E 00	2.828E-25	4.185E-31
25	2.700E 06	0.	3.000E 00	8.062E-03	1.153E-08
TOTAL	6.538E 15	1.036E 14		2.743E 04	4.396E-02

GAMMA ATTENUATION CALCULATION ORR FUEL DUMMY POINT SOURCE FOR SOURCE TERM, 98319 MWD/T, 20% ENRICHED

SOURCE SHIELDS DIST TO DETECTOR 6.160E 01 CM.
POINT SLAB

REACTOR DATA ORR FUEL SOURCE, 22.5 MW 156 DAY 3510.0 MWD IN 156.0 DAYS 1.1 YRS. AFTER SHUTDOWN

TAYLOR BUILDUP DATA FOR SHIELD 3 WITH EFFECTIVE ATOMIC NUMBER OF 82.0 USED

SHIELD THICKNESS 3.095E 01 2.390E 00 1.016E 01 7.620E 00

GROUP	TOTAL GROUP DOSE RATE PRODUCTION RATE AT DOSE POINT PHOTONS ROENTGENS/HOUR	GROUP BREMSSTRAHLUNG PHOTONS	GROUP AVERAGE ENERGY MEV	ENERGY FLUX AT DOSE POINT MEV/CMS/SEC
1	3.087E 13	3.087E 13	1.500E-02	1.450E-32 1.193E-36
2	2.204E 13	2.178E 13	2.500E-02	1.780E-32 3.079E-37
3	1.400E 13	1.350E 13	3.500E-02	1.651E-32 1.048E-37
4	9.589E 12	8.675E 12	4.500E-02	1.513E-32 4.962E-38
5	6.496E 12	6.459E 12	5.500E-02	1.293E-32 2.960E-38
6	4.818E 12	4.816E 12	6.500E-02	1.160E-32 2.193E-38
7	3.927E 12	3.927E 12	7.500E-02	1.116E-32 1.913E-38
8	9.682E 13	3.063E 12	8.500E-02	3.190E-31 5.159E-37
9	2.502E 12	2.501E 12	9.500E-02	9.418E-33 1.510E-38

10	5.083E 14	1.006E 12	1.500E-01	1.767E-29
	3.054E-35			
11	1.046E 13	2.596E 11	2.500E-01	3.856E-31
	7.558E-37			
12	2.802E 11	7.355E 10	3.500E-01	7.251E-18
	1.494E-23			
13	3.060E 14	1.844E 10	4.750E-01	5.067E-07
	1.034E-12			
14	1.212E 15	4.641E 09	6.500E-01	1.684E-02
	3.503E-08			
15	1.287E 15	1.120E 09	8.250E-01	1.961E 01
	3.921E-05			
16	2.007E 13	1.300E 08	1.000E 00	5.699E 00
	1.100E-05			
17	8.788E 12	2.823E 06	1.225E 00	4.436E 01
	8.163E-05			
18	1.794E 13	1.101E 04	1.475E 00	6.678E 02
	1.175E-03			
19	7.790E 10	0.	1.700E 00	9.184E 00
	1.570E-05			
20	6.359E 05	0.	1.900E 00	2.172E-04
	3.606E-10			
21	3.181E 13	0.	2.100E 00	1.961E 04
	3.138E-02			
22	1.230E 12	0.	2.300E 00	1.472E 03
	2.267E-03			
23	4.290E 05	0.	2.500E 00	6.045E-04
	9.188E-10			
24	0.	0.	2.700E 00	0.
	0.			
25	1.573E 04	0.	3.000E 00	4.696E-05
	6.715E-11			
TOTAL	3.595E 15	9.695E 13		2.183E 04
	3.497E-02			

GAMMA ATTENUATION CALCULATION ORR FUEL DUMMY POINT SOURCE FOR SOURCE TERM, 98319 MWD/T, 20% ENRICHED

SOURCE SHIELDS DIST TO DETECTOR 6.160E 01 CM.
POINT SLAB

REACTOR DATA ORR FUEL SOURCE, 22.5 MW 156 DAY 3510.0 MWD IN 156.0 DAYS 1.4 YRS. AFTER SHUTDOWN

TAYLOR BUILDUP DATA FOR SHIELD 3 WITH EFFECTIVE ATOMIC NUMBER OF 82.0 USED

SHIELD THICKNESS 3.095E 01 2.390E 00 1.016E 01 7.620E 00

GROUP	TOTAL GROUP DOSE RATE PRODUCTION RATE AT DOSE POINT PHOTONS ROENTGENS/HOUR	GROUP BREMSSTRAHLUNG PHOTONS	GROUP AVERAGE ENERGY MEV	ENERGY FLUX AT DOSE POINT MEV/CMS/SEC
1	2.986E 13	2.986E 13	1.500E-02	1.402E-32
	1.154E-36			
2	2.119E 13	2.104E 13	2.500E-02	1.711E-32
	2.960E-37			

3	1.345E 13	1.296E 13	3.500E-02	1.585E-32	1.006E-37
4	8.498E 12	8.322E 12	4.500E-02	1.341E-32	4.397E-38
5	6.247E 12	6.228E 12	5.500E-02	1.243E-32	2.847E-38
6	4.627E 12	4.625E 12	6.500E-02	1.114E-32	2.106E-38
7	3.772E 12	3.772E 12	7.500E-02	1.072E-32	1.838E-38
8	7.766E 13	2.942E 12	8.500E-02	2.559E-31	4.138E-37
9	2.400E 12	2.399E 12	9.500E-02	9.035E-33	1.448E-38
10	4.019E 14	9.627E 11	1.500E-01	1.397E-29	2.414E-35
11	4.062E 12	2.465E 11	2.500E-01	1.497E-31	2.935E-37
12	2.390E 11	6.918E 10	3.500E-01	6.184E-18	1.274E-23
13	2.461E 14	1.737E 10	4.750E-01	4.075E-07	8.312E-13
14	1.018E 15	4.426E 09	6.500E-01	1.414E-02	2.942E-08
15	4.981E 14	1.043E 09	8.250E-01	7.588E 00	1.518E-05
16	1.688E 13	1.069E 08	1.000E 00	4.794E 00	9.253E-06
17	7.187E 12	3.836E 05	1.225E 00	3.628E 01	6.675E-05
18	1.453E 13	1.496E 03	1.475E 00	5.409E 02	9.520E-04
19	7.675E 10	0.	1.700E 00	9.048E 00	1.547E-05
20	7.878E 03	0.	1.900E 00	2.691E-06	4.467E-12
21	2.525E 13	0.	2.100E 00	1.557E 04	2.491E-02
22	1.027E 12	0.	2.300E 00	1.229E 03	1.893E-03
23	2.499E 03	0.	2.500E 00	3.521E-06	5.352E-12
24	0.	0.	2.700E 00	0.	0.
25	9.161E 01	0.	3.000E 00	2.735E-07	3.911E-13
TOTAL	2.401E 15	9.345E 13		1.739E 04	2.786E-02

GAMMA ATTENUATION CALCULATION ORR FUEL DUMMY POINT SOURCE FOR SOURCE TERM, 98319 MWD/T, 20% ENRICHED

SOURCE SHIELDS DIST TO DETECTOR 6.160E 01 CM.
POINT SLAB

REACTOR DATA ORR FUEL SOURCE, 22.5 MW 156 DAY 3510.0 MWD IN 156.0 DAYS 1.6 YRS. AFTER SHUTDOWN

TAYLOR BUILDUP DATA FOR SHIELD 3 WITH EFFECTIVE ATOMIC NUMBER OF 82.0 USED

SHIELD THICKNESS 3.095E 01 2.390E 00 1.016E 01 7.620E 00

GROUP	TOTAL GROUP DOSE RATE PRODUCTION RATE AT DOSE POINT PHOTONS ROENTGENS/HOUR	GROUP BREMSSTRAHLUNG PHOTONS	GROUP AVERAGE ENERGY MEV	ENERGY FLUX AT DOSE POINT MEV/CMS/SEC
1	2.919E 13	2.919E 13	1.500E-02	1.371E-32 1.128E-36
2	2.066E 13	2.054E 13	2.500E-02	1.668E-32 2.886E-37
3	1.307E 13	1.261E 13	3.500E-02	1.541E-32 9.784E-38
4	8.128E 12	8.094E 12	4.500E-02	1.282E-32 4.206E-38
5	6.088E 12	6.077E 12	5.500E-02	1.211E-32 2.774E-38
6	4.505E 12	4.503E 12	6.500E-02	1.084E-32 2.051E-38
7	3.674E 12	3.674E 12	7.500E-02	1.044E-32 1.790E-38
8	6.245E 13	2.866E 12	8.500E-02	2.058E-31 3.327E-37
9	2.335E 12	2.334E 12	9.500E-02	8.792E-33 1.409E-38
10	3.193E 14	9.354E 11	1.500E-01	1.110E-29 1.919E-35
11	1.736E 12	2.388E 11	2.500E-01	6.400E-32 1.254E-37
12	2.072E 11	6.679E 10	3.500E-01	5.361E-18 1.104E-23
13	2.065E 14	1.689E 10	4.750E-01	3.419E-07 6.975E-13
14	9.254E 14	4.373E 09	6.500E-01	1.285E-02 2.674E-08
15	2.066E 14	1.028E 09	8.250E-01	3.147E 00 6.295E-06
16	1.424E 13	1.032E 08	1.000E 00	4.045E 00 7.806E-06
17	6.094E 12	5.213E 04	1.225E 00	3.076E 01 5.660E-05
18	1.181E 13	2.033E 02	1.475E 00	4.394E 02 7.734E-04
19	7.580E 10	0.	1.700E 00	8.936E 00 1.528E-05
20	9.760E 01	0.	1.900E 00	3.334E-08 5.534E-14
21	2.004E 13	0.	2.100E 00	1.235E 04 1.977E-02
22	8.573E 11	0.	2.300E 00	1.026E 03 1.580E-03
23	1.455E 01	0.	2.500E 00	2.051E-08 3.117E-14
24	0.	0.	2.700E 00	0. 0.
25	5.336E-01	0.	3.000E 00	1.593E-09 2.278E-15

TOTAL 1.863E 15 9.115E 13
1.387E 04 2.221E-02

GAMMA ATTENUATION CALCULATION ORR FUEL DUMMY POINT SOURCE FOR SOURCE TERM, 98319 MWD/T, 20% ENRICHED

SOURCE SHIELDS DIST TO DETECTOR 6.160E 01 CM.
POINT SLAB

REACTOR DATA ORR FUEL SOURCE, 22.5 MW 156 DAY 3510.0 MWD IN 156.0 DAYS 1.9 YRS. AFTER SHUTDOWN

TAYLOR BUILDUP DATA FOR SHIELD 3 WITH EFFECTIVE ATOMIC NUMBER OF 82.0 USED

SHIELD THICKNESS 3.095E 01 2.390E 00 1.016E 01 7.620E 00

GROUP	TOTAL GROUP DOSE RATE PRODUCTION RATE AT DOSE POINT PHOTONS ROENTGENS/HOUR	GROUP BREMSSTRAHLUNG PHOTONS	GROUP AVERAGE ENERGY MEV	ENERGY FLUX AT DOSE POINT MEV/CMS/SEC
1	2.868E 13	2.868E 13	1.500E-02	1.347E-32 1.109E-36
2	2.027E 13	2.016E 13	2.500E-02	1.637E-32 2.832E-37
3	1.279E 13	1.235E 13	3.500E-02	1.508E-32 9.573E-38
4	7.934E 12	7.927E 12	4.500E-02	1.252E-32 4.105E-38
5	5.971E 12	5.965E 12	5.500E-02	1.188E-32 2.721E-38
6	4.415E 12	4.413E 12	6.500E-02	1.063E-32 2.010E-38
7	3.601E 12	3.601E 12	7.500E-02	1.024E-32 1.755E-38
8	5.036E 13	2.810E 12	8.500E-02	1.659E-31 2.683E-37
9	2.288E 12	2.287E 12	9.500E-02	8.614E-33 1.381E-38
10	2.541E 14	9.157E 11	1.500E-01	8.834E-30 1.526E-35
11	8.880E 11	2.333E 11	2.500E-01	3.273E-32 6.415E-38
12	1.817E 11	6.515E 10	3.500E-01	4.701E-18 9.685E-24
13	1.753E 14	1.659E 10	4.750E-01	2.904E-07 5.924E-13
14	8.727E 14	4.343E 09	6.500E-01	1.212E-02 2.521E-08
15	9.825E 13	1.020E 09	8.250E-01	1.497E 00 2.994E-06
16	1.204E 13	1.022E 08	1.000E 00	3.419E 00 6.599E-06
17	5.257E 12	7.084E 03	1.225E 00	2.654E 01 4.883E-05
18	9.618E 12	2.763E 01	1.475E 00	3.579E 02 6.300E-04

19	7.492E 10	0.	1.700E 00	8.832E 00
	1.510E-05			
20	1.209E 00	0.	1.900E 00	4.130E-10
	6.856E-16			
21	1.590E 13	0.	2.100E 00	9.805E 03
	1.569E-02			
22	7.157E 11	0.	2.300E 00	8.567E 02
	1.319E-03			
23	8.477E-02	0.	2.500E 00	1.195E-10
	1.816E-16			
24	0.	0.	2.700E 00	0.
	0.			
25	3.108E-03	0.	3.000E 00	9.279E-12
	1.327E-17			
TOTAL	1.581E 15	8.944E 13		1.106E 04
	1.771E-02			

GAMMA ATTENUATION CALCULATION ORR FUEL DUMMY POINT SOURCE FOR SOURCE TERM, 98319 MWD/T, 20% ENRICHED

SOURCE SHIELDS DIST TO DETECTOR 6.160E 01 CM.
POINT SLAB

REACTOR DATA ORR FUEL SOURCE, 22.5 MW 156 DAY 3510.0 MWD IN 156.0 DAYS 2.2 YRS. AFTER SHUTDOWN

TAYLOR BUILDUP DATA FOR SHIELD 3 WITH EFFECTIVE ATOMIC NUMBER OF 82.0 USED

SHIELD THICKNESS 3.095E 01 2.390E 00 1.016E 01 7.620E 00

GROUP	TOTAL GROUP DOSE RATE PRODUCTION RATE AT DOSE POINT PHOTONS ROENTGENS/HOUR	GROUP BREMSSTRAHLUNG PHOTONS	GROUP AVERAGE ENERGY MEV	ENERGY FLUX AT DOSE POINT MEV/CMS/SEC
1	2.826E 13	2.826E 13	1.500E-02	1.327E-32
	1.092E-36			
2	1.995E 13	1.986E 13	2.500E-02	1.611E-32
	2.788E-37			
3	1.256E 13	1.214E 13	3.500E-02	1.481E-32
	9.402E-38			
4	7.796E 12	7.795E 12	4.500E-02	1.230E-32
	4.034E-38			
5	5.878E 12	5.875E 12	5.500E-02	1.170E-32
	2.678E-38			
6	4.343E 12	4.341E 12	6.500E-02	1.046E-32
	1.977E-38			
7	3.543E 12	3.543E 12	7.500E-02	1.007E-32
	1.726E-38			
8	4.074E 13	2.765E 12	8.500E-02	1.343E-31
	2.171E-37			
9	2.250E 12	2.249E 12	9.500E-02	8.471E-33
	1.358E-38			
10	2.023E 14	9.001E 11	1.500E-01	7.035E-30
	1.216E-35			
11	5.765E 11	2.290E 11	2.500E-01	2.125E-32
	4.165E-38			

12	1.609E 11	6.389E 10	3.500E-01	4.164E-18
	8.577E-24			
13	1.497E 14	1.636E 10	4.750E-01	2.479E-07
	5.057E-13			
14	8.372E 14	4.316E 09	6.500E-01	1.163E-02
	2.419E-08			
15	5.698E 13	1.014E 09	8.250E-01	8.681E-01
	1.736E-06			
16	1.020E 13	1.015E 08	1.000E 00	2.897E 00
	5.592E-06			
17	4.579E 12	9.650E 02	1.225E 00	2.311E 01
	4.253E-05			
18	7.856E 12	3.764E 00	1.475E 00	2.924E 02
	5.145E-04			
19	7.407E 10	0.	1.700E 00	8.732E 00
	1.493E-05			
20	1.506E-02	0.	1.900E 00	5.144E-12
	8.540E-18			
21	1.263E 13	0.	2.100E 00	7.784E 03
	1.245E-02			
22	5.977E 11	0.	2.300E 00	7.154E 02
	1.102E-03			
23	4.969E-04	0.	2.500E 00	7.001E-13
	1.064E-18			
24	0.	0.	2.700E 00	0.
	0.			
25	1.822E-05	0.	3.000E 00	5.439E-14
	7.777E-20			
TOTAL	1.408E 15	8.805E 13		8.828E 03
	1.414E-02			

GAMMA ATTENUATION CALCULATION ORR FUEL DUMMY POINT SOURCE FOR SOURCE TERM, 98319 MWD/T, 20% ENRICHED

SOURCE SHIELDS DIST TO DETECTOR 6.160E 01 CM.
POINT SLAB

REACTOR DATA ORR FUEL SOURCE, 22.5 MW 156 DAY 3510.0 MWD IN 156.0 DAYS 2.4 YRS. AFTER SHUTDOWN

TAYLOR BUILDUP DATA FOR SHIELD 3 WITH EFFECTIVE ATOMIC NUMBER OF 82.0 USED

SHIELD THICKNESS 3.095E 01 2.390E 00 1.016E 01 7.620E 00

GROUP	TOTAL GROUP DOSE RATE PRODUCTION RATE AT DOSE POINT PHOTONS ROENTGENS/HOUR	GROUP BREMSSTRAHLUNG PHOTONS	GROUP AVERAGE ENERGY MEV	ENERGY FLUX AT DOSE POINT MEV/CMS/SEC
1	2.790E 13	2.790E 13	1.500E-02	1.310E-32
	1.078E-36			
2	1.968E 13	1.959E 13	2.500E-02	1.589E-32
	2.749E-37			
3	1.236E 13	1.197E 13	3.500E-02	1.457E-32
	9.254E-38			
4	7.682E 12	7.682E 12	4.500E-02	1.212E-32
	3.975E-38			

5	5.798E 12	5.796E 12	5.500E-02	1.154E-32
	2.642E-38			
6	4.281E 12	4.279E 12	6.500E-02	1.031E-32
	1.949E-38			
7	3.494E 12	3.494E 12	7.500E-02	9.932E-33
	1.702E-38			
8	3.308E 13	2.726E 12	8.500E-02	1.090E-31
	1.763E-37			
9	2.218E 12	2.217E 12	9.500E-02	8.349E-33
	1.338E-38			
10	1.612E 14	8.868E 11	1.500E-01	5.605E-30
	9.685E-36			
11	4.599E 11	2.253E 11	2.500E-01	1.695E-32
	3.323E-38			
12	1.437E 11	6.285E 10	3.500E-01	3.720E-18
	7.663E-24			
13	1.282E 14	1.616E 10	4.750E-01	2.124E-07
	4.332E-13			
14	8.101E 14	4.290E 09	6.500E-01	1.125E-02
	2.341E-08			
15	4.021E 13	1.008E 09	8.250E-01	6.126E-01
	1.225E-06			
16	8.661E 12	1.009E 08	1.000E 00	2.460E 00
	4.748E-06			
17	4.015E 12	1.311E 02	1.225E 00	2.027E 01
	3.729E-05			
18	6.433E 12	5.115E-01	1.475E 00	2.394E 02
	4.213E-04			
19	7.323E 10	0.	1.700E 00	8.634E 00
	1.476E-05			
20	1.866E-04	0.	1.900E 00	6.373E-14
	1.058E-19			
21	1.002E 13	0.	2.100E 00	6.178E 03
	9.885E-03			
22	4.990E 11	0.	2.300E 00	5.973E 02
	9.198E-04			
23	2.894E-06	0.	2.500E 00	4.078E-15
	6.199E-21			
24	0.	0.		2.700E 00
	0.	0.		
25	1.061E-07	0.	3.000E 00	3.168E-16
	4.530E-22			
TOTAL	1.287E 15	8.685E 13		7.047E 03
	1.128E-02			

5.6.5 Short MTR Divider Shipment

5.6.5.1 Scope

The Model 2000 Transportation Package can contain an MTR fuel basket that is shorter than the standard MTR basket. As a result of this, fuel can be exposed at the top of the package (front, if shipped horizontally). The dose on the side (top and bottom, if shipped horizontally) will be affected. This study involves determining the dose rate at contact on the side, 2m from the side, at the cab of the vehicle, and the 1m accident locations. A combination of the worst cases for the photon and neutron source terms is studied. The photon case is done using the source term from the 93% enriched fuel and the neutron case is done using the source term from the 20% enriched fuel. Dose rates at all other enrichments will be enveloped by these two sets of runs. The dose rates at the bottom and top (back and front, if shipped horizontally) are enveloped by previous calculations presented in Section 5.1.

5.6.5.2 Assumptions

All assumptions presented in this Chapter are valid. The worst case scenario from a standpoint of dose rates was produced by the 93.2% enriched MTR source. This MTR source also bounds the TRIGA sources (See Section 5.5).

The basket legth is shortened and is now 127 cm (50 in.). The basket has legs that are about 0.7 in. Thus the height of the basket is 128.778 cm (50.7 in.). The fuel length is still 114.3 cm (45 in.). Per Figure 5.6.5.1, 2.93 in. of the bundle is exposed. Part of this bundle is inactive fuel (2.938 cm or 1.1565 in.). Thus only 4.50469 cm (1.7735 in.) is actual fuel. In addition there is a 1.905 cm (0.75 in.) gap between the top of the fuel bundle and the top of the cask cavity. Refer to Figure 5.4. During normal shipment conditions, the fuel does not move, and therefore, the exposed fuel protrudes 4.50469 cm from the top of the basket.

For the neutron analysis, the 20% enriched case is the limiting case and the analysis is done for the neutron source term derived from a 20% enriched fuel (see Table 5.2B). Also, the lead in the cask and the lumped fission product in the fuel have been removed. Both these assumptions are mildly conservative.

5.6.5.3 Gamma Source Term

The gamma source terms are shown in Table 5.4. The neutron source terms are shown in Table 5.5.

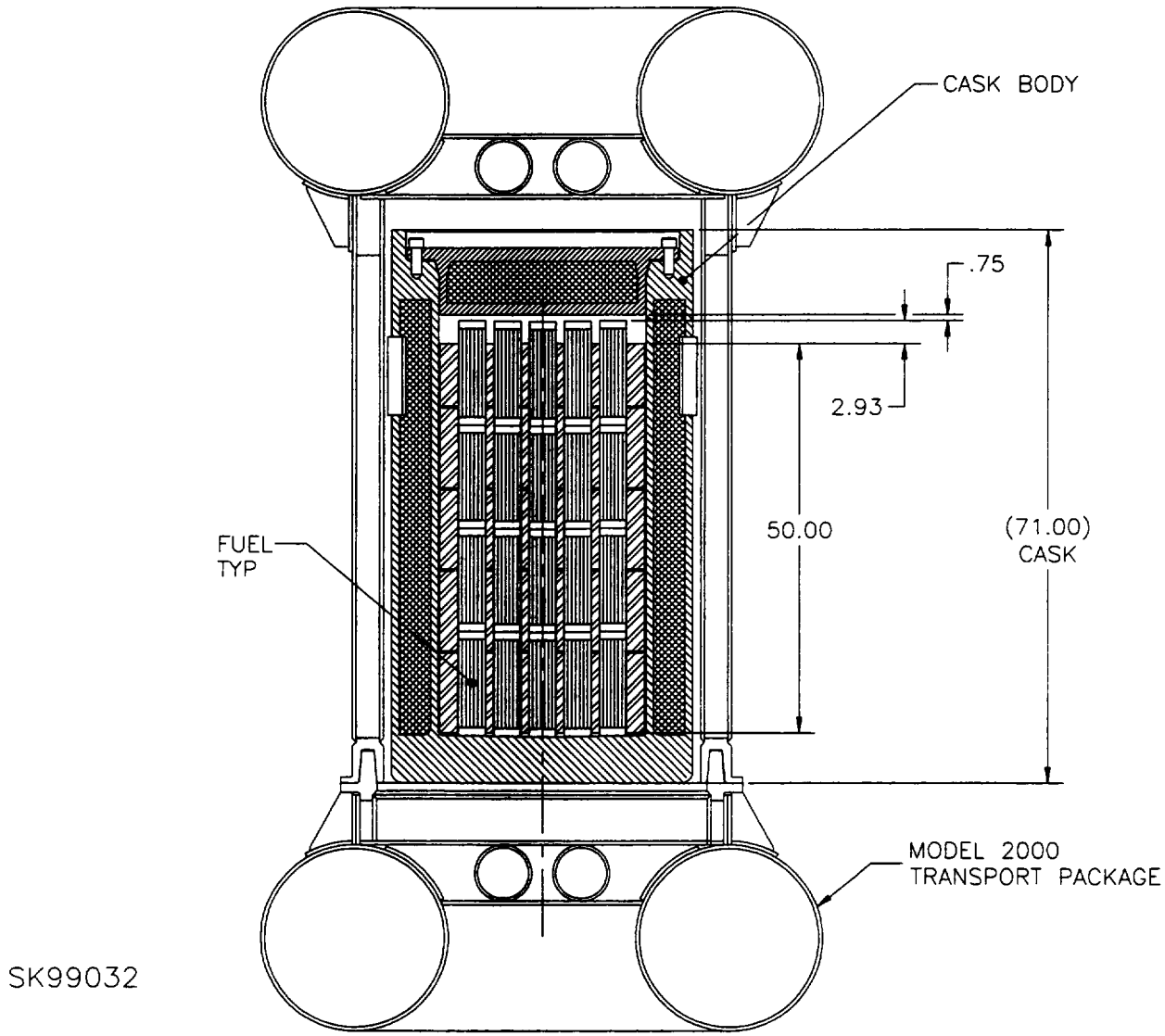

Figure 5.4. Model 2000 Cask with Short Divider

Table 5.4. Source Term

Group	Group Average Energy (MeV)	Total Group Production Rate (photons/sec)
		93.2% Enriched Case
1	1.500E-02	6.704E+13
2	2.500E-02	4.726E+13
3	3.500E-02	2.976E+13
4	4.500E-02	1.847E+13
5	5.500E-02	1.393E+13
6	6.500E-02	1.029E+13
7	7.500E-02	8.398E+12
8	8.500E-02	6.784E+13
9	9.500E-02	5.333E+12
10	1.500E-01	3.242E+14
11	2.500E-01	1.119E+12
12	3.500E-01	3.516E+11
13	4.750E-01	3.040E+14
14	6.500E-01	1.941E+15
15	8.250E-01	1.024E+14
16	1.000E 00	2.107E+13
17	1.225E 00	1.021E+13
18	1.475E 00	1.416E+13
19	1.700E 00	2.070E+11
20	1.900E 00	2.748E-04
21	2.100E 00	2.004E+13
22	2.300E 00	1.185E+12
23	2.500E 00	3.566E-06
24	2.700E 00	0.000E+00
25	3.000E 00	1.308E-07
TOTALS		3.008E+15

The source terms were generated using RIBD for the gammas and these verified sources are in Table 5.2A. The source term has been calculated using RIBD based on a maximum allowed burnup of 533,000 MWd/t, for 93.2% enriched fuel with 880 days of cooling time.

5.6.5.3.1 Neutron Source Term

Table 5.5. Neutron Source Terms

Enrichment percent	Spontaneous Fission neutrons/sec	(α,n) neutrons/sec
20	2.206e+06	3.772e+05

The neutron source term was generated using ORIGEN, as described in Section 5.2. The 20% enriched case has the highest neutron source strength and would envelop the other enrichments. The TRIGA fuels will be enveloped by these calculations.

5.6.5.4 Description of Source Inputs in MCNP

The gamma and neutron sources are described in Section 5.2.

5.6.5.5 Geometry Description of Cask, Overpack, and Fuel Basket

The geometry description of cask, overpack, and fuel basket is described in Section 5.3. The only additional modeling is as follows:

The top of the basket is at 54.1528 cm from the origin (surf 423). The fuel now extends from -55.64251 (surf 421) to 58.65749 cm (surf 422), total span of 114.3 cm (45 in.). The first 109.79531 cm (43.23 in.) of fuel is covered by the ingot (surf 423- surf 421). The space above the ingot inside the cask is now treated as a matrix containing 21 fuel slots with no stainless steel between slots (Cells 322-330) to the top of the fuel. The space above that inside the cask is void.

5.6.5.6 Tallies in MCNP

5.6.5.6.1 Gamma Tallies

The gamma tallies in MCNP are all point detector tallies (type *F5) which provide MeV/cm^2-source neutron, which is multiplied by the dose conversion factors accompanying the code ISOSHLD.

The gamma dose rate is calculated using ring detectors about the z-axis at a location half way between the top of the ingot and the top of the cavity (i.e., at 56.4051cm). The four calculations are done at radii of 61.6 (surface of the side overpack), 329.54 (2m from the side of the truck), 701.67 (cab of the vehicle from the side), 161.6 cm (1m from the side in an accident).

The final dose rate presented has been multiplied by the source strength. The results presented, in Section 5.1, include the 2-sigma uncertainty. No bias is added as MCNP neutron and gamma transport biases for these problems are negligible (References [5.7] and [5.8]).

The gamma flux-to-dose conversion factors are presented below. These are taken from the ISOSHLD code (ISOSHLD, Kernel Integration Code- general Purpose Isotope Shielding Analysis, CCC-79).

Flux-to-Dose Rate Average Energy (MeV)	Conversion Factor (R/hr per MeV/cm^2-sec)
1.500E-02	8.230E-05
2.500E-02	1.730E-05
3.500E-02	6.349E-06
4.500E-02	3.280E-06
5.500E-02	2.289E-06
6.500E-02	1.891E-06
7.500E-02	1.714E-06
8.500E-02	1.618E-06
9.500E-02	1.603E-06
1.500E-01	1.728E-06
2.500E-01	1.960E-06
3.500E-01	2.060E-06
4.750E-01	2.039E-06
6.500E-01	2.080E-06
8.250E-01	2.000E-06
1.000E 00	1.930E-06
1.225E 00	1.841E-06
1.475E 00	1.761E-06
1.700E 00	1.710E-06
1.900E 00	1.660E-06
2.100E 00	1.600E-06
2.300E 00	1.540E-06
2.500E 00	1.520E-06
2.700E 00	1.480E-06
3.000E 00	1.430E-06

5.6.5.6.2 Neutron Tallies

The neutron tallies were also performed at the same locations as the first gamma tallies. Since the flux-to-dose conversions require tallies in n/cm^2 -sec, F5 tallies are used (instead of the *F5 tallies in the case of gammas).

The neutron flux-to-dose conversion factors are from NCRP-38, ANSI/ANS 6.1.1-1977 (also found in Reference [5.5], Appendix H).

Neutron Energy (MeV)	Conversion Factor (rem/hr) / (neutron/cm^2-sec)
2.5e-08	3.67e-06
1.0e-07	3.67e-06
1.0e-06	4.46e-06
1.0e-05	4.54e-06
1.0e-04	4.18e-06
1.0e-03	3.76e-06
1.0e-02	3.56e-06
1.0e-01	2.17e-05
5.0e-01	9.26e-05
1.00	1.32e-04
2.50	1.25e-04
5.00	1.56e-04
7.00	1.47e-04
10.00	1.47e-04
14.00	2.08e-04
20.00	2.27e-04

5.6.5.7 Material Types

The material specifications used on the model are described in Subsection 5.3.1.

5.6.5.8 Results

The analysis assumes a good deal of conservatism in the specific burnups used for these calculations. They represent an upper bound for each enrichment and thus the dose rates have that conservatism built into them. Table 5.6 that follows presents these results. The other normal condition dose rates and all accident condition dose rates presented in Section 5.1. are bounding for the short basket shipments. Thus, all the dose rates are within prescribed limits for both the vertical and horizontal shipments under normal or accident conditions.

No bias is assumed for the MCNP calculations. This is a reasonable assumption given the extensive qualification and benchmarking work performed with the code by LANL. The details are presented in References [5.7] and [5.8].

Table 5.6. Summary of Maximum Dose Rates (mrem/hr), from an MTR-Type Fuel Source

For Gammas: 93.2% enriched fuel: 533,000 MWd/T, (28 MW for 300 days), cooled for 880 days, 1265.1 Watts decay heat.

For Neutrons: 20% enriched fuel: 100,000 MWd/T (22.5 MW for 156 days), cooled for 880 days, 582.4 Watts decay heat.

All results shown are presented as calculated dose rate + 2σ.

Normal Conditions	**Side Surface of Package**	**2 Meters from the Side Surface of Truck**	**Cab of Vehicle from Side**
Gamma	150.03	9.30	1.87
Neutron	2.94	0.22+	0.03
Total	152.97	9.52	1.9
49 CFR Part 173.441 Limit	200	10	2
	Hypothetical Accident Conditions: 1m from the Side		
Gamma	35.34		
Neutron	0.53		
Total	35.87		
10 CFR part 71 Limit	1000		

Note: + This calculation was done at 2m from the side of the package.