NEDO-32318
CLASS 1
AUGUST, 2000

# MODEL 2000

# RADIOACTIVE MATERIAL TRANSPORT PACKAGE

# 2000 WATTS DECAY HEAT UPGRADE

# SAFETY ANALYSIS REPORT

GE NUCLEAR ENERGY VALLECITOS AND MORRIS OPERATIONS
VALLECITOS NUCLEAR CENTER
PLEASANTON, CALIFORNIA

## NOTICE AND DISCLAIMER

This report was prepared by General Electric Company solely for the use of the U.S. Nuclear Regulatory Commission (NRC) in licensing the Model 2000 Transport Package to a maximum decay heat of 2000 watts in the material or content to be transported, excluding irradiated fuels. General Electric assumes no responsibility for liability or damage which may result from any other use of the information disclosed in this report.

The information contained in this report is believed to be an accurate and true representation of the facts known by or provided to General Electric at the time this report was prepared. General Electric Company and the individual contributors to this report make no express or implied warranty with respect to the accuracy, completeness, or usefulness of the information contained in this report, other than for the licensing of the Model 2000 Transport Package to a maximum decay heat of 2000 watts in the material or content to be transported, excluding irradiated fuels or that the use of any information disclosed in this report may not infringe privately owned rights, including patent rights.

The following endorsements apply to Safety Analysis Report:

Checked By: _____ Date 7/27/94
Harold Durlofsky, Ph.D., Consultant
Structural Mechanics Analysis
Sunnyvale, California

Checked By: _____ Date 7/27/94
George E. Cunningham
Senior Licensing Engineer

Approved By: _____ Date 7/27/94
Raul J. Pomares, Manager
Engineering Projects

# TABLE OF CONTENTS

Page

1.0 GENERAL INFORMATION ..... 1-1

1.1 Introduction ..... 1-2
1.2 Package Description ..... 1-2

1.2.1 Packaging ..... 1-2
1.2.2 Operational Features ..... 1-13
1.2.3 Contents of Packaging ..... 1-13

1.3 Reference ..... 1-14
1.4 Appendix ..... 1-15

1.4.1 Drawing ..... 1-15

2.0 STRUCTURAL EVALUATION ..... 2-1

2.1 Structural Design ..... 2-2

2.1.1 Discussion ..... 2-2
2.1.2 Design Criteria ..... 2-7

2.2 Component Weights ..... 2-9
2.3 Mechanical Properties of Materials ..... 2-10
2.4 General Standards for All Packages ..... 2-11

2.4.1 Minimum Package Size ..... 2-11
2.4.2 Tamperproof Feature ..... 2-11
2.4.3 Positive Closure ..... 2-11
2.4.4 Chemical and Galvanic Reactions ..... 2-11

2.5 Lifting and Tie-Down Standards for All Packages ..... 2-11
2.6 Normal Conditions of Transport ..... 2-11

2.6.1 Heat ..... 2-12
2.6.2 Cold ..... 2-20
2.6.3 Reduced External Pressure ..... 2-24
2.6.4 Increased External Pressure ..... 2-24
2.6.5 Vibration ..... 2-24
2.6.6 Water Spray ..... 2-28
2.6.7 Free Drop ..... 2-28
2.6.8 Compression ..... 2-31

**TABLE OF CONTENTS (Continued)**

Page

2.6.9 Penetration ..... 2-31
2.6.10 Summary of Results ..... 2-31
2.6.11 Buckling ..... 2-34

2.7 Hypothetical Accident Conditions ..... 2-51

2.7.1 Free Drop ..... 2-51
2.7.2 Puncture ..... 2-51
2.7.3 Thermal ..... 2-51
2.7.4 Immersion – Fissile Material ..... 2-56
2.7.5 Immersion – All Packages ..... 2-56
2.7.6 Summary of Damage ..... 2-63

2.8 Special Form ..... 2-63

2.9 Fuel Rods ..... 2-63

2.10 References ..... 2-66

2.11 Appendix ..... 2-68

2.11.1 Fatigue Evaluation ..... 2-68
2.11.2 Buckling Analysis per ASME Case Code N-284 [2.6] ..... 2-71
2.11.3 Tabulation of Stresses for Individual Load ..... 2-82
2.11.4 Multifunctional Rack Structural Evaluation ..... 2-245
2.11.5 Cask Content Weight Combinations ..... 2-288

3.0 THERMAL EVALUATION ..... 3-1

3.1 Discussion ..... 3-2

3.1.1 Thermal Design Criteria ..... 3-2
3.1.2 Design Bases Conditions ..... 3-2
3.1.3 Results of Design Basis Thermal Analysis ..... 3-3

3.2 Summary of Thermal Properties of Materials ..... 3-5

3.2.1 Lead ..... 3-5
3.2.2 Stainless Steel (304 Type) ..... 3-6
3.2.3 Air ..... 3-7
3.2.4 Helium ..... 3-8

**TABLE OF CONTENTS (Continued)**

Page

3.3 Technical Specifications of Components ..... 3-9
3.4 Thermal Evaluation for Normal Conditions ..... 3-9

3.4.1 Analytical Model ..... 3-12
3.4.2 Maximum Temperatures ..... 3-21
3.4.3 Minimum Temperatures ..... 3-31
3.4.4 Maximum Internal Pressures ..... 3-31
3.4.5 Maximum Thermal Stresses ..... 3-31

3.5 Hypothetical Accident Thermal Evaluation ..... 3-36

3.5.1 Analytical Model ..... 3-36
3.5.2 Package Conditions and Environment ..... 3-36
3.5.3 Package Temperatures ..... 3-36
3.5.4 Maximum Internal Pressures ..... 3-37
3.5.5 Maximum Thermal Stresses ..... 3-51
3.5.6 Evaluation of Package Performance for Hypothetical Accident ..... 3-51

3.6 References ..... 3-58
3.7 Appendix ..... 3-60

3.7.1 LIBRA Finite Element Program Heat Transfer Module ..... 3-60
3.7.2 Thermal Test on GE Model 2000 Transport Package [3.2] ..... 3-62
3.7.3 Thermal Evaluation on Shipping Racks ..... 3-65
3.7.4 Effect of Source Location within the Cask Cavity ..... 3-84

4.0 CONTAINMENT ..... 4-1

5.0 SHIELDING EVALUATION ..... 5-1

5.1 Discussion and Results ..... 5-2
5.2 Source Specifications ..... 5-5

5.2.1 Gamma Sources ..... 5-5
5.2.2 Neutron Source ..... 5-5

5.3 Model Specification ..... 5-7

5.3.1 Description of the Radial and Axial Shielding Configuration ..... 5-7
5.3.2 Shield Regional Densities ..... 5-10

**TABLE OF CONTENTS (Continued)**

Page

5.4 Shielding Evaluation ..... 5-10

5.4.1 Fuel Source ..... 5-10
5.4.2 Activation Product Sources ..... 5-10
5.4.3 Bounding Limits ..... 5-14

5.5 References ..... 5-15
5.6 Appendix ..... 5-16

6.0 CRITICALITY EVALUATION ..... 6-1

7.0 OPERATING PROCEDURES ..... 7-1

8.0 ACCEPTANCE TESTS AND MAINTENANCE PROGRAM ..... 8-1

8.1 Acceptance Test ..... 8-2

8.1.1 Visual Inspection ..... 8-2
8.1.2 Structural and Pressure ..... 8-3
8.1.3 Leak Tests ..... 8-3
8.1.4 Component Tests ..... 8-3
8.1.5 Test for Shielding Integrity ..... 8-4
8.1.6 Thermal Acceptance Tests ..... 8-4

8.2 Maintenance Program ..... 8-7

8.2.1 Structural and Pressure Tests ..... 8-7
8.2.2 Leak Tests ..... 8-8
8.2.3 Subsystems Maintenance ..... 8-8
8.2.4 Valves, Rupture Disks, and Gaskets on Containment Vessel ..... 8-8
8.2.5 Shielding ..... 8-8
8.2.6 Thermal ..... 8-9

# TABLES


| Table | Title | Page |
|---|---|---|
| 1.1 | Radioactive Materials, Projects for Shipment | 1-13 |
| 2.1 | Allowable Stress Limit Criteria | 2-7 |
| 2.2 | Summary of Load Combinations for Normal and Hypothetical Accident Conditions of Transport | 2-8 |
| 2.3 | Model 2000 Transport Component Weights | 2-9 |
| 2.4 | Mechanical Properties of Lead | 2-10 |
| 2.5 | Mechanical Properties of Stainless Steel | 2-10 |
| 2.6 | Maximum Normal Condition Temperatures | 2-12 |
| 2.7 | Fabrication Stresses Due to Lead Pouring | 2-20 |
| 2.8 | Summary of Stresses, Normal Condition of Transport | 2-32 |
| 2.9 | Comparison of Maximum Stresses, 600W and 2000W Contents Heat Normal Conditions of Transport | 2-33 |
| 2.10 | Summary of Temperatures | 2-56 |
| 2.11 | Summary of Results for Accident Conditions | 2-64 |
| 2.12 | Comparison of Stresses for 600 Watts vs. 2000 Watts Contents Heat Accident Conditions | 2-65 |
| 2.13 | Calculated Membrane Stress Component (psi) Toroid Wall Thickness of 0.5 Inch | 2-72 |
| 2.14 | Calculated Membrane Stress Component (psi) Toroid Wall Thickness of 0.76 Inch | 2-73 |
| 2.15 | Plasticity Reduction Factors | 2-76 |
| 2.16 | Theoretical Buckling Stress (psi) | 2-78 |
| 2.17 | Amplified Stress Components | 2-78 |

**TABLES (Continued)**

| Table | Title | Page |
|---|---|---|
| 2.18 | Elastic Buckling Analysis | 2-80 |
| 2.19 | Inelastic Buckling Analysis | 2-81 |
| 2.20-2-31 | Stress Values at Varying Locations and Thermal Conditions | 2-84 to 2-95 |
| 2.32 | Summary of Load Combinations for Normal and Hypothetical Accident Conditions of Transport | 2-96 |
| 2.33-2.69 | Summary of Stresses for Load Combinations, Normal Conditions of Transport (0.76 in Wall Toroid) | 2-97 to 2-133 |
| 2.70-2.106 | Summary of Stresses for Load Combinations, Accident Conditions of Transport (0.76 in Wall Toroid) | 2-134 to 2-170 |
| 2.107-2.143 | Summary of Stresses for Load Combinations, Normal Conditions of Transport (0.50 in Wall Toroid) | 2-171 to 2-207 |
| 2.144-2.180 | Summary of Stresses for Load Combinations, Accident Conditions of Transport (0.50 in Wall Toroid) | 2-208 to 2-244 |
| 2.181 | Maximum Normal Condition Temperatures | 2-248 |
| 2.182 | Thermal Stress Intensities, Normal Conditions | 2-249 |
| 2.183 | Vibration Analysis at -20 Degrees Fahrenheit | 2-253 |
| 2.184 | Vibration Analysis at 100 Degrees Fahrenheit | 2-254 |
| 2.185 | Normal Condition Head On Drop at -20 Degrees Fahrenheit | 2-258 |
| 2.186 | Normal Condition Head On Drop at 100 Degrees Fahrenheit | 2-259 |
| 2.187 | Normal Condition Bottom Drop at -20 Degrees Fahrenheit | 2-262 |
| 2.188 | Normal Condition Bottom Drop at 100 Degrees Fahrenheit | 2-263 |
| 2.189 | Normal Condition Side Drop at -20 Degrees Fahrenheit | 2-265 |
| 2.190 | Normal Condition Side Drop at 100 Degrees Fahrenheit | 2-266 |
| 2.191 | Summary for Normal Conditions | 2-267 |

**TABLES (Continued)**


| Table | Title | Page |
|---|---|---|
| 2.192 | Accident Condition Head On Drop | 2-272 |
| 2.193 | Accident Condition Bottom Drop | 2-275 |
| 2.194 | Accident Condition Side Drop | 2-277 |
| 2.195 | Accident Condition CG Over Corner | 2-280 |
| 2.196 | Summary of Results for Accident Conditions | 2-282 |
| 2.197 | Selected Combinations of Maximum Contents Components | 2-288 |
| 3.1 | Summary of Temperatures | 3-3 |
| 3.2 | Comparison Between 600 W vs. 2000 W Contents Heat | 3-4 |
| 3.3 | Summary of Exact-Solution Heat Transfer Problems and Their Results | 3-61 |
| 3.4 | Comparison of Thermal Test on Model 1500 and LIBRA Results | 3-62 |
| 3.5 | Summary of Temperatures | 3-66 |
| 3.6 | Comparison Between Two Different Models | 3-66 |
| 3.7 | Thermal Stresses | 3-83 |
| 3.8 | Summary of Temperatures | 3-85 |
| 5.1.1 | Summary of Maximum Dose Rates (Mr/Hr) from a 422,000 Curie Cs-137 Source in Multifunctional Rack | 5-3 |
| 5.1.2 | Summary of Maximum Dose Rates (Mr/Hr) from Other Isotopes | 5-3 |
| 5.2.1 | Isotopic Gamma Sources | 5-6 |
| 5.4.1 | Curie Limit for Model 2000 (Dose Rate and Decay Heat Bases) | 5-15 |

## ILLUSTRATIONS


| Figure | Title | Page |
|---|---|---|
| 1.1 | Model 2000 Transport Packaging | 1-3 |
| 1.2 | Model 2000 Transport Packaging, Cask | 1-4 |
| 1.3 | Model 2000 Transport Packaging, Overpack | 1-7 |
| 1.4 | Multifunctional Rack | 1-8 |
| 1.5 | Barrel Rack | 1-9 |
| 1.6 | Lead Liner | 1-10 |
| 1.7 | Material Basket | 1-11 |
| 2.1 | Model 2000 Cask | 2-3 |
| 2.2 | Model 2000 Overpack | 2-4 |
| 2.3 | Model 2000 Cask, Finite Element Structural Model | 2-6 |
| 2.4 | Model 2000 Package, Finite Element Thermal Model | 2-13 |
| 2.5 | Element Detail of Maximum Stresses and Temperatures (°F) for 100°F Ambient with Maximum Insolation and Maximum Decay Heat | 2-15 |
| 2.6 | Stress Point Locations with Element Numbers | 2-17 |
| 2.7 | Model 2000 Cask – Thermal Stress Analysis (Q, ksi) Steady-State Condition; 100°F Ambient Temperature, Maximum Decay Heat Plus Maximum Insolation | 2-18 |
| 2.8 | Model 2000 Cask – Thermal Stress Analysis (Q, ksi) Steady-State Condition, 100°F Ambient Temperature and Maximum Decay Heat | 2-19 |
| 2.9 | Model 2000 – Stress Intensity ($P_m + P_b$, ksi); Internal Pressure, 30 psia | 2-21 |
| 2.10 | Model 2000 Cask – Thermal Stress Analysis (Q, ksi) Steady-State Condition, -20°F Ambient Temperature and Maximum Decay Heat | 2-22 |
| 2.11 | Model 2000 Cask – Thermal Stress Analysis (Q, ksi) Steady-State Condition, -40°F Ambient Temperature and Maximum Decay Heat | 2-23 |
| 2.12 | Stress Intensity ($P_m + P_b$, ksi); Reduced External Pressure, 30 psia | 2-25 |

**ILLUSTRATIONS (Continued)**


| Figure | Title | Page |
|---|---|---|
| 2.13 | Stress Intensity ($P_m + P_b$, ksi); Increased External Pressure | 2-26 |
| 2.14 | Stress Intensity ($P_m + P_b$, ksi); Combined Vibration | 2-27 |
| 2.15 | Stress Intensity ($P_m + P_b$, ksi); 1-ft. Free Drop, Head-On Orientation | 2-29 |
| 2.16 | Stress Intensity ($P_m + P_b$, ksi); 1-ft. Free Drop, Side Orientation | 2-30 |
| 2.17 | Stress Intensity ($P_m + P_b + Q$, ksi) – Hot Environment @ 100°F Plus Decay Heat | 2-35 |
| 2.18 | Stress Intensity ($P_m + P_b + Q$, ksi) – Cold Environment @ -40°F Plus Decay Heat | 2-36 |
| 2.19 | Stress Intensity ($P_m + P_b + Q$, ksi) – Cold Environment @ -40°F Without Decay Heat | 2-37 |
| 2.20 | Stress Intensity ($P_m + P_b + Q$, ksi) – Minimum External Pressure @ 100°F Plus Decay Heat | 2-38 |
| 2.21 | Stress Intensity ($P_m + P_b + Q$, ksi) – Minimum External Pressure @ -20°F Plus Decay Heat | 2-39 |
| 2.22 | Stress Intensity ($P_m + P_b + Q$, ksi) – Increased Pressure @ 100°F | 2-40 |
| 2.23 | Stress Intensity ($P_m + P_b + Q$, ksi) – Increased Pressure @ -20°F Plus Decay Heat | 2-41 |
| 2.24 | Stress Intensity ($P_m + P_b + Q$, ksi) – Vibration with Maximum Decay Heat @ 100°F | 2-42 |
| 2.25 | Stress Intensity ($P_m + P_b + Q$, ksi) – Vibration with Maximum Decay Heat @ -20°F | 2-43 |
| 2.26 | Stress Intensity ($P_m + P_b + Q$, ksi) – Vibration without Decay Heat @ -20°F | 2-44 |
| 2.27 | Stress Intensity ($P_m + P_b + Q$, ksi) – Free Drop, Head-On Orientation 100°F Ambient Temperature Plus Decay Heat | 2-45 |

**ILLUSTRATIONS (Continued)**


| Figure | Title | Page |
|---|---|---|
| 2.28 | Stress Intensity ($P_m + P_b + Q$, ksi) – Free Drop, Head-On Orientation -20°F Ambient Temperature Plus Decay Heat | 2-46 |
| 2.29 | Stress Intensity ($P_m + P_b + Q$, ksi) – Free Drop, Head-On Orientation -20°F Ambient Temperature | 2-47 |
| 2.30 | Stress Intensity ($P_m + P_b + Q$, ksi) – Free Drop, Side Orientation 100°F Ambient Temperature Plus Decay Heat | 2-48 |
| 2.31 | Stress Intensity ($P_m + P_b + Q$, ksi) – Free Drop, Side Orientation -20°F Ambient Temperature Plus Decay Heat | 2-49 |
| 2.32 | Stress Intensity ($P_m + P_b + Q$, ksi) – Free Drop, Side Orientation -40°F Ambient Temperature Plus Decay Heat | 2-50 |
| 2.33 | 30-ft. Free Head-On Drop (Top Orientation) Stress Intensity ($P_m + P_b$, ksi) | 2-52 |
| 2.34 | 30-ft. Free Head-On Drop, (Bottom Orientation) Stress Intensity ($P_m + P_b$, ksi) | 2-53 |
| 2.35 | Stress Intensity Values ($P_m + P_b$, ksi) – Side Orientation, 30-ft. Free Drop. | 2-54 |
| 2.36 | Element Detail of Maximum Stress Intensity for Fire Transient, t=2.5 Hours | 2-55 |
| 2.37 | Model 2000 Cask – Thermal Stress Analysis (Q, ksi) Transient Condition (t = 0.05 Hours) | 2-57 |
| 2.38 | Model 2000 Cask – Thermal Stress Analysis (Q, ksi) Transient Condition (t = 1.0 Hours) | 2-58 |
| 2.39 | Model 2000 Cask – Thermal Stress Analysis (Q, ksi) Transient Condition (t = 1.5 Hours) | 2-59 |
| 2.40 | Model 2000 Cask – Thermal Stress Analysis (Q, ksi) Transient Condition (t = 2.0 Hours) | 2-60 |
| 2.41 | Model 2000 Cask – Thermal Stress Analysis (Q, ksi) Transient Condition (t = 2.5 Hours) | 2-61 |
| 2.42 | Model 2000 Cask – Thermal Stress Analysis (Q, ksi) Transient Condition (t = 3.0 Hours) | 2-62 |

**ILLUSTRATIONS (Continued)**


| Figure | Title | Page |
|---|---|---|
| 2.43 | Stress Point Locations With Element Numbers | 2-83 |
| 2.44 | Multifunctional Rack Finite Element Model, Normal Configuration | 2-246 |
| 2.45 | Multifunctional Rack Finite Element Model, Inverted Configuration | 2-247 |
| 2.46 | Element of High Stresses | 2-251 |
| 2.47 | Element of High Stresses, Beam Elements | 2-252 |
| 2.48 | Normal Condition Head On Drop | 2-257 |
| 2.49 | Normal Condition Bottom Drop, Loadings | 2-260 |
| 2.50 | Normal Condition Bottom Drop, Boundary Conditions | 2-261 |
| 2.51 | Normal Condition Side Drop | 2-264 |
| 2.52 | Accident Condition Head On Drop | 2-271 |
| 2.53 | Accident Condition Bottom Drop, Loadings | 2-273 |
| 2.54 | Accident Condition Bottom Drop, Boundary Conditions | 2-274 |
| 2.55 | Accident Side Drop | 2-276 |
| 2.56 | Accident CG Over Corner Drop, Loadings | 2-278 |
| 2.57 | Accident Condition CG Over Corner Drop, Boundary Conditions | 2-279 |
| 3.1 | Finite Element Thermal Model | 3-11 |
| 3.2 | Thermal Finite Element Model, Overlaid on Transport Overpack | 3-13 |
| 3.3 | Key Plot of Temperature Locations | 3-22 |
| 3.4 | Model 2000 Transport Package, Steady-State Analysis 100°F Ambient Temperature, Maximum Decay Heat and Minimum Insolation | 3-23 |
| 3.5 | Model 2000 Transport Package, Steady-State Analysis 100°F Ambient Temperature and Maximum Decay Heat | 3-24 |
| 3.6 | Model 2000 Transport Package, Steady-State Analysis -20°F Ambient Temperature and Maximum Decay Heat | 3-25 |

**ILLUSTRATIONS (Continued)**


| Figure | Title | Page |
|---|---|---|
| 3.7 | Model 2000 Transport Package, Steady-State Analysis -40°F Ambient Temperature and Maximum Decay Heat | 3-26 |
| 3.8 | Model 2000 Cask – Contour Plot, Steady-State Condition – 100°F Ambient Temperature, Maximum Decay Heat Plus Minimum Insolation | 3-27 |
| 3.9 | Model 2000 Transport Package – Contour Plot, Steady-State Condition – 100°F Ambient Temperature and Maximum Decay Heat | 3-28 |
| 3.10 | Model 2000 Transport Package – Contour Plot, Steady-State Condition; -20°F Ambient Temperature and Maximum Decay Heat | 3-29 |
| 3.11 | Model 2000 Transport Package – Contour Plot, Steady-State Condition; -40°F Ambient Temperature and Maximum Decay Heat | 3-30 |
| 3.12 | Model 2000 Cask – Thermal Stress Analysis (Q,ksi), Steady-State Condition; 100°F Ambient Temperature, Maximum Decay Heat Plus Maximum Insolation | 3-32 |
| 3.13 | Model 2000 Cask – Thermal Stress Analysis (Q, ksi), Steady-State Condition; 100°F Ambient Temperature and Maximum Decay Heat | 3-33 |
| 3.14 | Model 2000 Cask – Thermal Stress Analysis (Q, ksi), Steady-State Condition; -20°F Ambient Temperature and Maximum Decay Heat | 3-34 |
| 3.15 | Model 2000 Cask – Thermal Stress Analysis (Q, ksi), Steady-State Condition; -40°F Ambient Temperature and Maximum Decay Heat | 3-35 |
| 3.16 | Model 2000 Transport Package, Transient Analysis – Fire 100°F Ambient Temperature, Maximum Decay Heat and Maximum Insolation Time: 0.5 Hr | 3-38 |
| 3.17 | Model 2000 Transport Package, Transient Analysis – Fire 100°F Ambient Temperature, Maximum Decay Heat and Maximum Insolation Time: 1.0 Hr | 3-39 |
| 3.18 | Model 2000 Transport Package, Transient Analysis – Fire 100°F Ambient Temperature, Maximum Decay Heat and Minimum Insolation Time: 1.5 Hr | 3-40 |
| 3.19 | Model 2000 Transport Package, Transient Analysis – Fire 100°F Ambient Temperature, Maximum Decay Heat and Maximum Insolation Time: 2.0 Hr | 3-41 |

**ILLUSTRATIONS (Continued)**

| Figure | Title | Page |
|---|---|---|
| 3.20 | Model 2000 Transport Package, Transient Analysis – Fire 100°F Ambient Temperature Plus Maximum Decay Heat and Maximum Insolation Time: 2.5 Hr | 3-42 |
| 3.21 | Model 2000 Transport Package, Transient Analysis – Fire 100°F Ambient Temperature Plus Maximum Decay Heat and Maximum Insolation Time: 3.0 Hr | 3-43 |
| 3.22 | Model 2000 Transport Package – Contour Plot Transient Analysis: Fire Plus 100°F Ambient Temperature, Maximum Decay Heat and Maximum Insolation, Time: 0.5 Hour | 3-44 |
| 3.23 | Model 2000 Transport Package – Contour Plot Transient Analysis: Fire Plus 100°F Ambient Temperature, Maximum Decay Heat and Maximum Insolation, Time: 1.0 Hour | 3-45 |
| 3.24 | Model 2000 Transport Package – Contour Plot Transient Analysis: Fire Plus 100°F Ambient Temperature, Maximum Decay Heat and Maximum Insolation, Time: 1.5 Hour | 3-46 |
| 3.25 | Model 2000 Transport Package – Contour Plot Transient Analysis: Fire Plus 100°F Ambient Temperature, Maximum Decay Heat and Maximum Insolation, Time: 2.0 Hour | 3-47 |
| 3.26 | Model 2000 Transport Package – Contour Plot Transient Analysis: Fire Plus 100°F Ambient Temperature, Maximum Decay Heat and Maximum Insolation, Time: 2.5 Hour | 3-48 |
| 3.27 | Model 2000 Transport Package – Contour Plot Transient Analysis: Fire Plus 100°F Ambient Temperature, Maximum Decay Heat and Maximum Insolation, Time: 3.0 Hour | 3-49 |
| 3.28 | Temperature vs. Time, Accident Condition | 3-50 |
| 3.29 | Model 2000 Cask – Thermal Stress Analysis (Q, ksi) Fire Transient Condition (t = 0.5 Hour) | 3-52 |
| 3.30 | Model 2000 Cask – Thermal Stress Analysis (Q, ksi) Transient Condition (t = 1.0 Hour) | 3-53 |
| 3.31 | Model 2000 Cask – Thermal Stress Analysis (Q, ksi) Transient Condition (t = 1.5 Hours) | 3-54 |

**ILLUSTRATIONS (Continued)**


| Figure | Title | Page |
|---|---|---|
| 3.32 | Model 2000 Cask – Thermal Stress Analysis (Q, ksi) Transient Condition (t = 2.0 Hours) | 3-55 |
| 3.33 | Model 2000 Cask – Thermal Stress Analysis (Q, ksi) Transient Condition (t = 2.5 Hours) | 3-56 |
| 3.34 | Model 2000 Cask – Thermal Stress Analysis (Q, ksi) Transient Condition (t = 3.0 Hours) | 3-57 |
| 3.35 | Cavity Wall Temperature – Thermal Test vs. LIBRA Model Model 2000 Transport Package with 2000 Watts Heat | 3-64 |
| 3.36 | Finite Element Model | 3-69 |
| 3.37 | Model 2000 Transport Package – Contour Plot Steady State Condition – 100°F Ambient Temperature, Maximum Insolation and Maximum Decay Heat, Source Material Model | 3-71 |
| 3.38 | Model 2000 Transport Package – Contour Plot Steady State Condition – 100°F Ambient Temperature, and Maximum Decay Heat, Source Material Model | 3-72 |
| 3.39 | Model 2000 Transport Package – Contour Plot Steady State Condition – -20°F Ambient Temperature, and Maximum Decay Heat, Source Material Model | 3-73 |
| 3.40 | Model 2000 Transport Package – Contour Plot Transient Analysis: Fire Plus 100°F Ambient Temperature, and Maximum Decay Heat Time: 0.5 Hour, Source Material Model | 3-75 |
| 3.41 | Model 2000 Transport Package – Contour Plot Transient Analysis: Fire Plus 100°F Ambient Temperature, and Maximum Decay Heat Time: 3.0 Hour, Source Material Model | 3-76 |
| 3.42 | Multifunctional Rack Finite Element Model, Normal Configuration | 3-79 |
| 3.43 | Multifunctional Rack Finite Element Model, Inverted Configuration | 3-80 |
| 3.44 | Elements of High Stresses | 3-81 |
| 3.45 | Elements of High Stresses, Beam Elements | 3-82 |

**ILLUSTRATIONS (Continued)**

| Figure | Title | Page |
|---|---|---|
| 3.46 | Model 2000 Transport Package – Contour Plot Steady State Condition – 100°F Ambient Temperature, Maximum Insolation, and Maximum Decay Heat Applied, 90% Top 21 Inches Cavity Wall and 10% at Lid | 3-85 |
| 3.47 | Model 2000 Transport Package – Contour Plot Steady State Condition – 100°F Ambient Temperature, Maximum Insolation, and Maximum Decay Heat Applied, 80% Bottom 21 Inches Cavity Wall and 10% at Each End | 3-86 |
| 3.48 | Model 2000 Transport Package – Contour Plot Steady State Condition – 100°F Ambient Temperature, Maximum Insolation, and Maximum Decay Heat Applied, 100% Cavity Wall | 3-87 |
| 5.1 | Normal Condition Shield Analysis Geometry | 5-8 |
| 5.2 | Cs-137 Capsule Model Geometry | 5-9 |
| 8.1 | Cask Shielding Inspection Points | 8-5 |
| 8.2 | Thermocouple Locations | 8-6 |

# 1.0 GENERAL INFORMATION

This Safety Analysis Report (SAR) describes and evaluates the Model 2000 Transport Package with a content or materials (excluding irradiated fuels) having a maximum decay heat of 2000 watts. It also presents the evaluation of the racks used to support or contain these materials. Drawings of the subject racks are included in Subsection 1.3.2.

The description and evaluation of the Model 2000 Transport Package presented in this SAR is based on the Model 2000 Radioactive Material Transport Package Safety Analysis Report, Reference 1.1.

## 1.1 INTRODUCTION

The Model 2000 Packaging (United State Nuclear Regulatory Commission, USNRC, Model 2000, Certificate of Compliance No. 9228) is currently licensed to a maximum decay heat of 600 watts. This SAR describes and evaluates an upgrade to 2000 watts of decay heat for the content or materials, excluding irradiated fuels to be transported. No modifications to the Model 2000 packaging containment boundary is required to accommodate this decay heat upgrade. Neither would it have a significant effect on the design, operating characteristics, or safety performance of the packaging, as described in the Reference [1.1].

The Model 2000 Package is currently licensed for transport of irradiated fuel rods which may be cut or segmented, byproduct, and source or special nuclear material, in solid form. The material or content is limited to a maximum decay heat of 600 watts. Also, its weight including carrier racks, shoring or secondary containers must not exceed 5450 lb. The fissile contents of the allowed irradiated fuel must have the following characteristics:

a) "Not to exceed 1175 grams U-235 equivalent mass with initial enrichment not to exceed 5 weight percent in the fissile isotope; minimum pellet diameter of 0.3 inch, maximum burnup of 45 GWd/MTU, and minimum cooling time of 120 days," or

b) "Not to exceed 1750 grams U-235 equivalent mass with initial enrichment not to exceed 5 weight percent in the fissile isotope; minimum pellet diameter of 0.35 inch, maximum burnup of 38 GWd/MTU, and minimum cooling time of 120 days."

c) "Irradiated High Flux Isotope Reactor (HFIR) fuel assembly, positioned within the HFIR fuel basket and liner as licensed."

Authorization is sought for shipment of content or materials (excluding irradiated fuels) with a maximum decay heat of 2000 watts in the Model 2000 Package under 10CFR71.13 [1.2] provisions for modifications of contents of a Type B package.

## 1.2 PACKAGE DESCRIPTION

### 1.2.1 Packaging

The Model 2000 Packaging is a cylindrical cask transported in the upright position inside an overpack structure. The overpack has toroidal shell impact limiters at each end (see Figure 1.1). The approximate overall packaging dimensions are 131.5 inches in height and 72 inches in diameter. The approximate gross weight of the package is 33,350 lb.

The cask is constructed of two 1-inch thick type 304 stainless steel concentric cylindrical shells (see Figure 1.2). The shells are joined at the bottom end to a 6-inch thick type 304 stainless steel forging. The annulus between the two shells is approximately 4 inches wide and is filled with lead. The cask has an approximate height of 71 inches and an outer diameter of 38.5 inches. The cask cavity is approximately 26.5 inches in diameter and 54 inches in depth. The cask lid is made

**FIGURE WITHHELD UNDER 10 CFR 2.390**

Figure 1.1. Model 2000 Transport Packaging

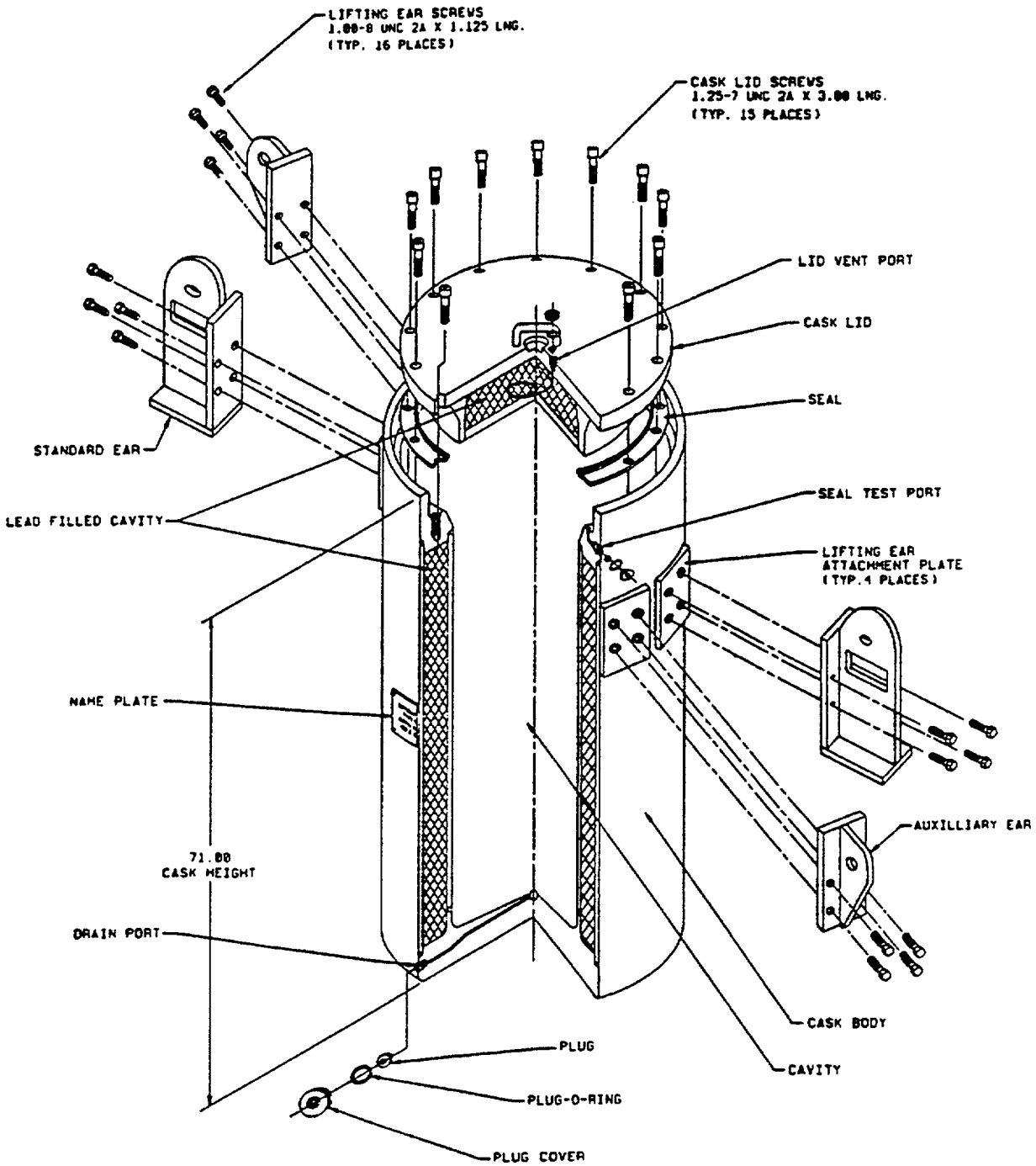


**Figure 1.2. Model 2000 Transport Packaging, Cask**

of type 304 stainless steel and lead. It has a stepped design, and is fully recessed into the cask top flange. The lid is secured to the cask body by 15 1-1/4 inch diameter socket head screws. The cask is sealed by elastomeric O-rings bonded to a thin aluminum disc-shaped ring. The cask has a seal test port in the side of the cask body, a vent port in the cask lid, and a drain port near the bottom of the cask. The cask body has attachment plates for lifting devices which are detached during transport.

The cask is positioned within an overpack constructed from two 0.5-inch thick type 304 stainless steel concentric cylindrical shells (see Figure 1.3). The shells are separated radially by eight equally spaced tubes along the length of the shells and by two tube sections around the perimeter of the shells. A toroidal shell impact limiter made of type 304 stainless steel is attached to each end of the overpack shells. The overpack opens just above the lower impact limiter for access to the cask. The top section of the overpack is joined to the base by 15 1-3/8 inch diameter shoulder screws. Gussets on the top and bottom impact limiters provide tie-down points for the package.

The content or materials, in solid form, are typically encapsulated in a tube. Dimensions and materials of construction of these capsules vary They could have an outside diameter of 0.375 in. minimum and 2.75 in. maximum, a length of 8 in. minimum and 52 in. maximum, and been constructed of stainless steel or aluminum material. Detailed discussion of the typical content or materials is presented below.

There are two basic design configurations of the racks use to provide spacing and in some cases, additional shielding for the content or materials inside the Model 2000 cask cavity, the Multifunctional (Figure 1.4) and Barrel (Figure 1.5) racks. Both racks allow the optional use of the previously approved Lead liner (Figure 1.6) and the Material basket, Figure 1.7. The Material basket provides an optional open container or basket to house the content or materials for easy handling.

The Multifunctional rack is a stainless steel weldment of plate, tubing, and pipes (see Figure 1.4) designed to be used either with or without a lead liner. The basket may be built as either a one-piece or a two-piece (with upper and lower stackable sections) assembly. While the dimensions of the basket will vary, depending on whether the rack is used in conjunction with a lead liner and the length of the contents or material to be stored, the overall geometry of the rack will look similar for both cases.

Several 19.75 to 26.00 inch diameter plates are welded to a central support tube, which can range from 5 to 10 inches in outside diameter by 0.38 inch wall. The number of plates used will vary, based upon the material length, and will be determined so as to provide adequate structural rigidity to the assembly. The plates are 0.25 inch minimum to 0.50 thick maximum thickness. Holes of various diameters and spacing are placed in these plates to accommodate spacer pipes and the material. Through holes, whose diameter may vary from 0.5 inch to 3.0 inch, are placed in the upper plates to accept the material. The number of holes (positions for material) is determined by the required hole diameter and the requirement that the minimum spacing between adjacent hole edges be equal to the largest hole radius. Schedule 40 support pipes, 0.5 or 1.0 inch diameter, are welded to the plates. The number of support pipes used is as required to provide sufficient structural rigidity to the rack assembly. The base of the material to be stored rests upon the top surface of one of the lower plates. Holes in the lower plates, which allow for free flow of

water during drying operations, are positioned so they are not aligned with the material in the upper holes. Consequently the lower plates provide additional shielding for the cask bottom. Depending upon the required configuration, the overall height of the multifunctional rack will range from 49.0 to 54.0 inches.

The Material Basket consists of a long tube with a ring/handle assembly mounted at the top and a tungsten plug pinned at the bottom (see Figure 1.7). The overall length of the assembly will vary from 6.0 to 50.0 inches, depending on the lengths of the tube and the tungsten plug. The stainless steel tube is 1.25 inch in diameter with a 0.12 inch wall. The 0.06 inch thick stainless steel ring is welded to the top of the tube, and has a 3.50 inch outside diameter. Two small stainless steel tabs are welded to the ring; a 0.09 inch diameter cable passes through holes in the tabs and forms a handle or bail. A 1.25 inch diameter tungsten plug is pinned to the base of the tube with a 0.06 inch diameter by 1.25 inch long stainless steel pin. The length of the tungsten plug will vary depending on the quantity, isotope, and strength of the material to be transported. Four equally spaced 0.25 inch diameter drain holes are located near the bottom of the tube just above the top of the tungsten plug.

The Barrel rack consists of a 10.00 to 20.00 inch diameter by 44.00 or 52.00 inch long (stainless or carbon steel) liner with three optional (removable) spacer bars and two lifting rings, as shown in Figure 1.5. The liner has a centrally located 1.0 to 2.0 inch diameter cavity running the entire length, or optionally, three equally spaced 1.0 to 2.0 inch diameter cavities on a 4.0 to 5.0 inch bolt circle. The spacer bars are fabricated from 1.25 inch schedule 40 aluminum pipe welded to a 0.50 thick aluminum rail. Each spacer bar is bolted to the side of the liner with three 3/8-16UNC stainless steel screws. Four equally spaced drainage channels, 0.38 inches wide, are machined into the liner bottom surface. Each of the hoist rings is attached to the top surface of the liner with two 1/2-13UNC stainless steel socket head cap screws.

The General Electric Quality Assurance Program (QAP-1) used for the design, manufacture, and maintenance of the Model 2000 packaging and both of these racks, satisfies the eighteen criteria of 10CFR71, Subpart H [1.2]. QAP-1 [1.3] has been approved by the USNRC under Docket 71-0170.

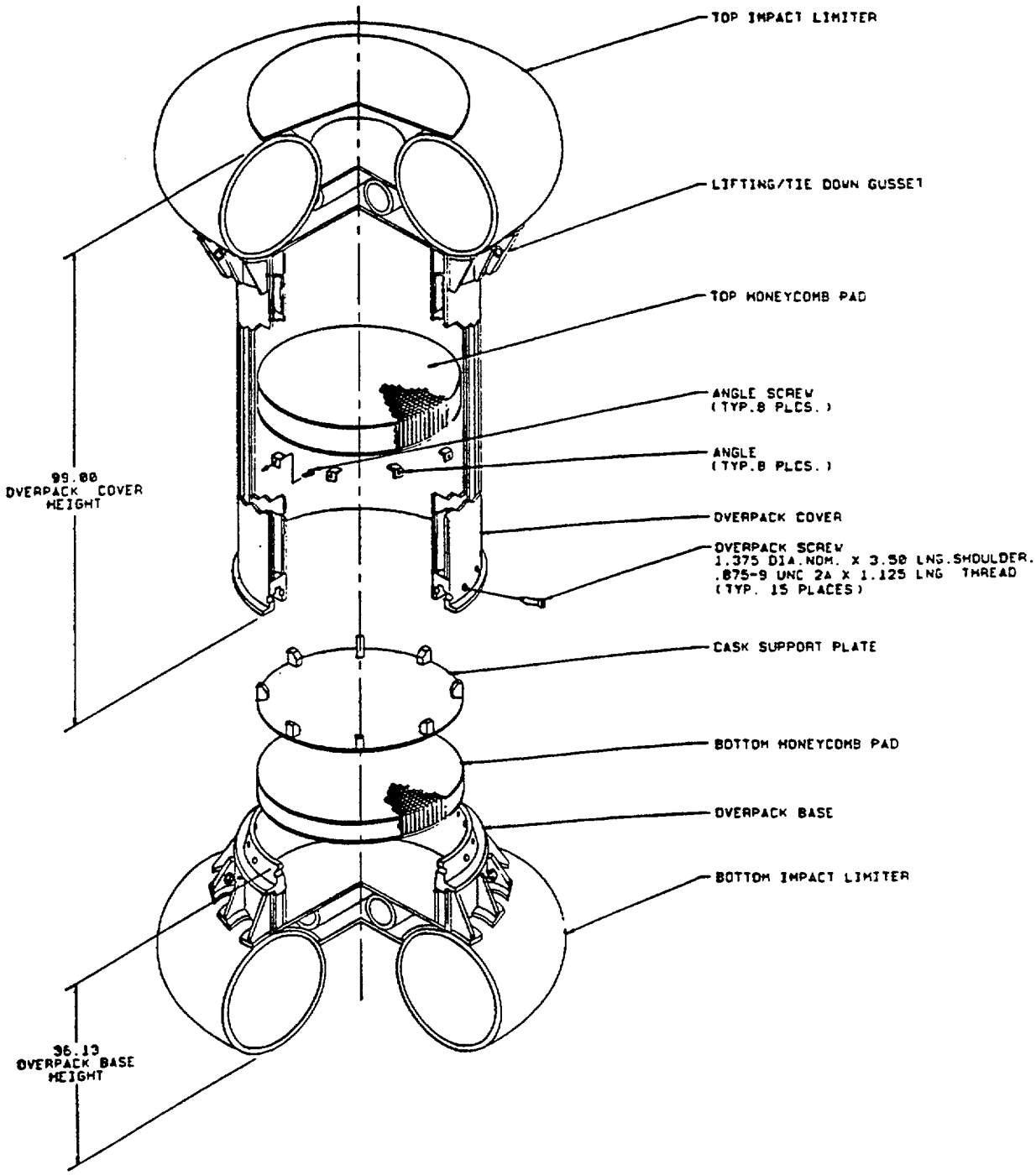


**Figure 1.3. Model 2000 Transport Packaging, Overpack**

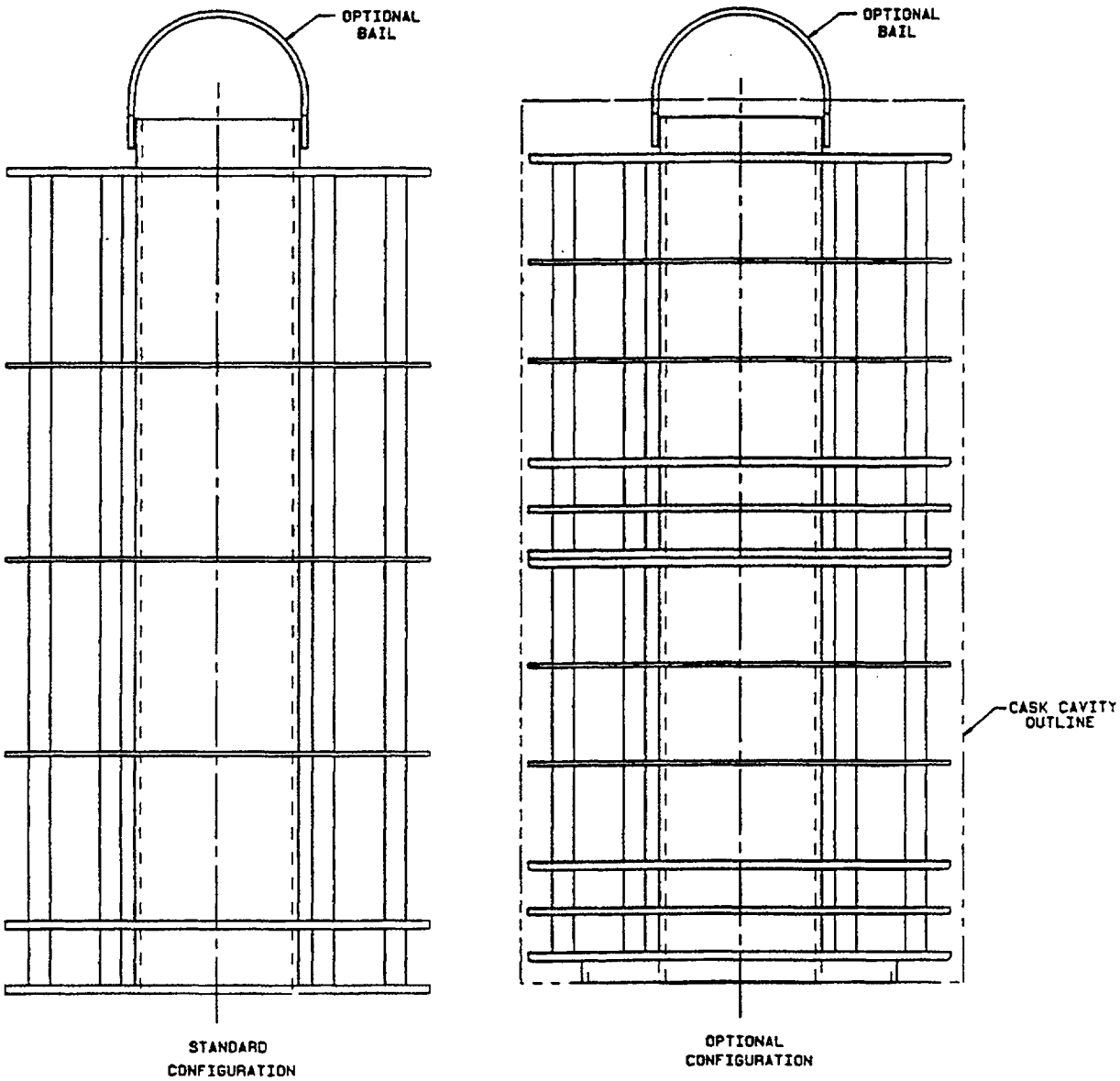


**Figure 1.4. Multifunctional Rack**

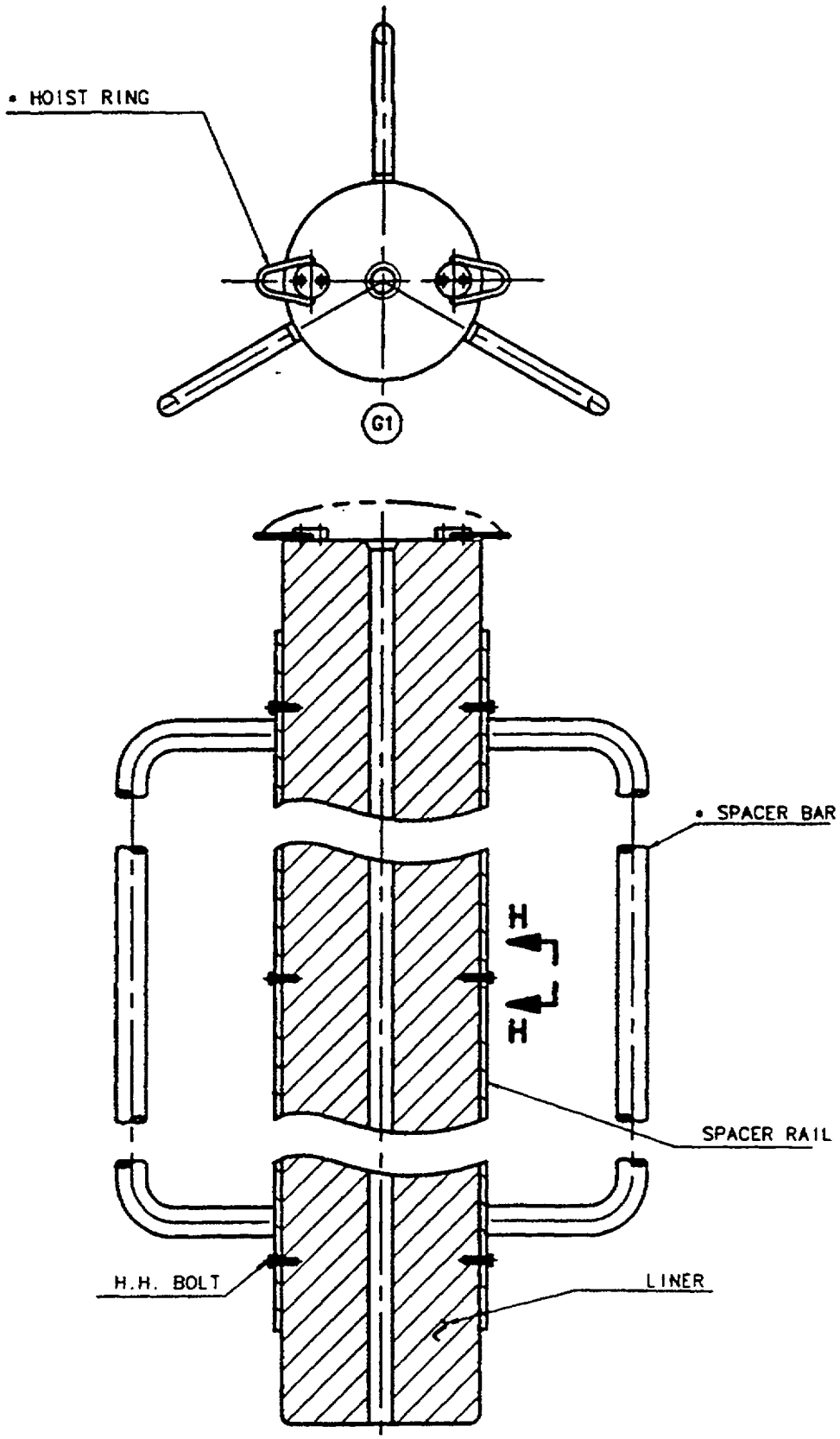


**Figure 1.5. Barrel Rack**

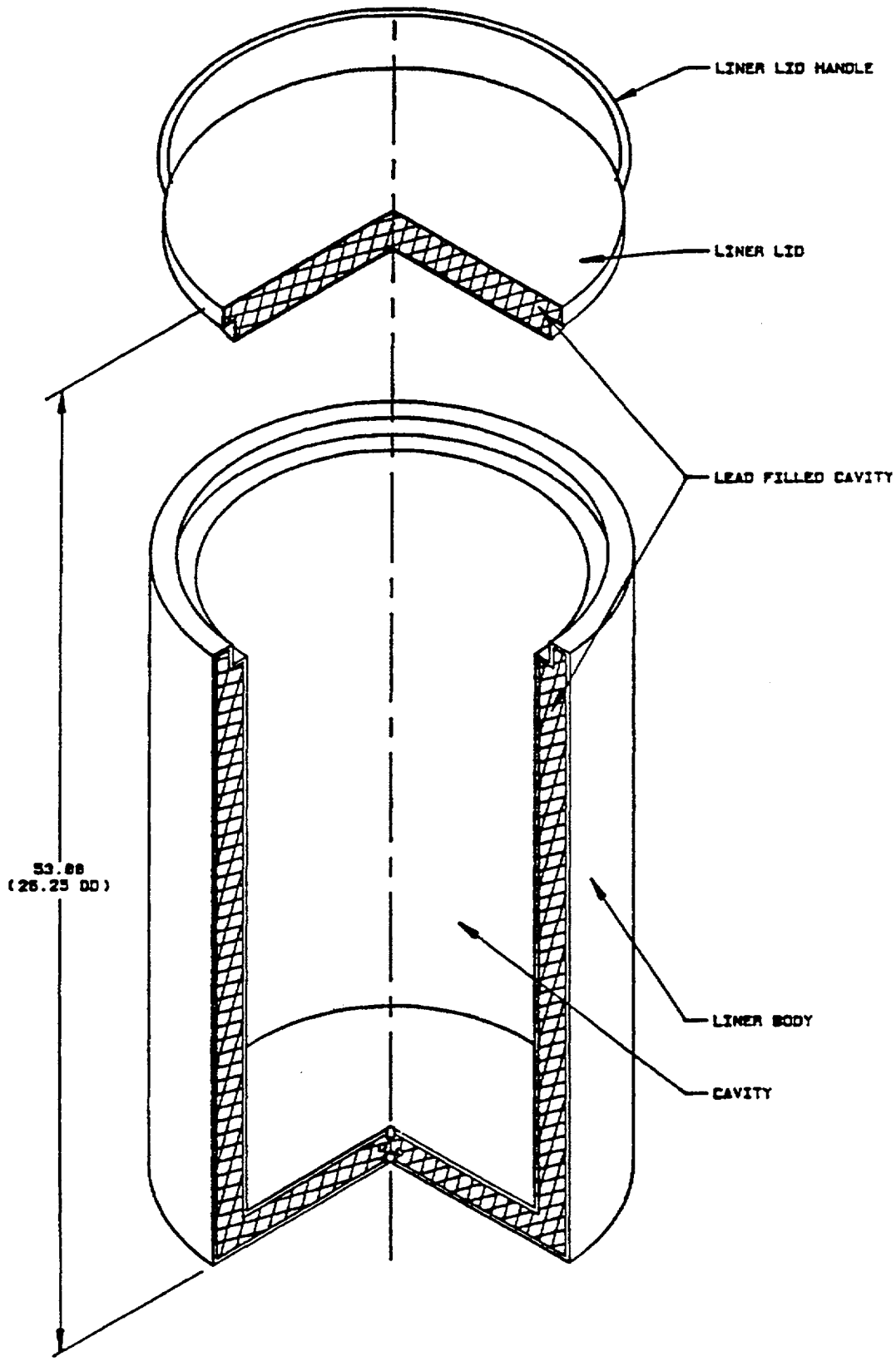


**Figure 1.6. Lead Liner**

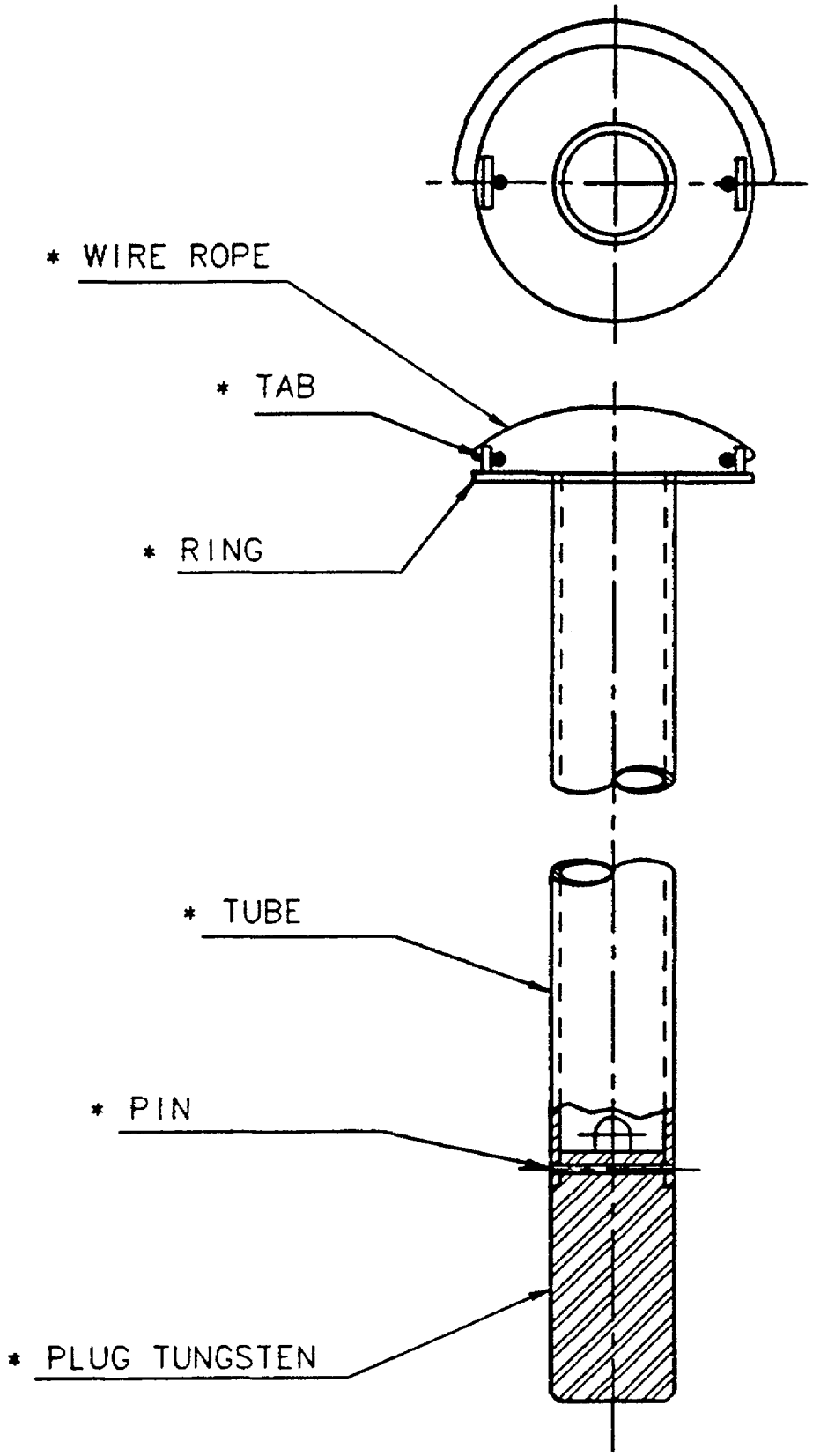


**Figure 1.7. Material Basket**

(LEFT BLANK)

### 1.2.2 Operational Features

The upgrade to 2000 watts of decay heat in the Model 2000 Package does not change or introduce any new operational features to the Package. The high heat content materials may be loaded in the Model 2000 cask dry or underwater. All wet-loaded operation with this cask requires that the cask cavity be drained and vacuum dried to remove any residual moisture. Both rack designs contain features to allow easy drainage of water for underwater loading. To vacuum dry the cask, its cavity pressure is reduced below the vapor pressure of water and maintained at or below this pressure level for a period of time.

### 1.2.3 Contents of Packaging

The Model 2000 Package is used to transport Type B quantities of radioactive materials and fissile materials (Class III). This includes byproduct, source, and special nuclear materials. This Report addresses the upgrade to 2000 watts of decay heat, as an authorized content when shipping radioactive materials, excluding irradiated fuels.

The projected radioactive materials to be shipped in the Model 2000 Package will include, but not limited to those given in Table 1.1.

**Table 1.1. Radioactive Materials, Projected for Shipment**

| Material | Physical Form | Max. Content per Shipment | Shipping Configuration |
|---|---|---|---|
| Cesium-137 | Chloride | 422,000 Ci | Multifunctional rack (two tier option) |
| Cobalt-60 | Metal | 130,000 Ci | Barrel rack (7" steel min.) and Mat. bskt (1.25" W thck. min.) |
| Hafnium-181 | | 456,000 Ci | Multifunctional rack |
| Iridium- 192 | Metal | 348,000 Ci | Multifunctional rack and Mat'l bskt 1.125" min. W thk. |
| Strontium-90 Yttrium-90 | Fluoride | 596,000 Ci(1) | Multifunctional rack |
| Zirconium-95 Niobium-95 | Metal | 409,000 Ci(1) | Multifunctional rack |

(1) Based on the activity ratio of parent/daughter at theoretical equilibrium.

## 1.3 REFERENCE

1.1. Model 2000 Radioactive Material Transport Package Safety Analysis Report, NEDO-31581, April 1988.

1.2. Code of Federal Regulations, Title 10, Part 71, 1992.

1.3. General Electric Quality Assurance Program for Shipping Packages for Radioactive Material, QAP-1, Revision 5, 1990.

# APPENDIX 1.4 - DRAWING

# FIGURE WITHHELD UNDER 10 CFR 2.390

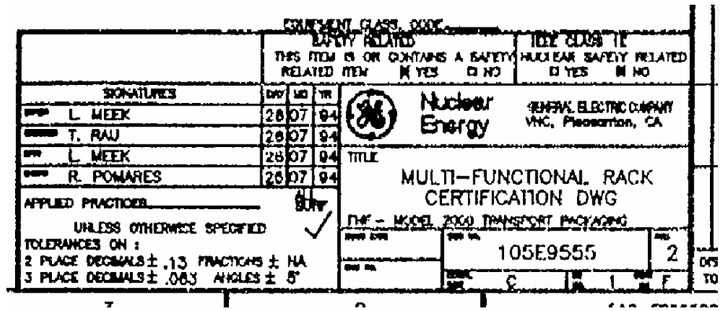

# FIGURE WITHHELD UNDER 10 CFR 2.390

| | | | | |
|---|---|---|---|---|
| | | SAFETY RELATED<br>THIS ITEM IS OR CONTAINS A SAFETY RELATED ITEM ☒ YES ☐ NO | | IEEE CLASS 1E<br>NUCLEAR SAFETY RELATED<br>☐ YES ☒ NO |
| SIGNATURES | | DAY | MO | YR |
| DRAWN | L. MEEK | 26 | 07 | 94 |
| CHECKED | T. RAU | 26 | 07 | 94 |
| DFTG | L. MEEK | 26 | 07 | 94 |
| ENGRG | R. POMARES | 26 | 07 | 94 |

APPLIED PRACTICES X AU SURF

UNLESS OTHERWISE SPECIFIED XXX ✓

TOLERANCES ON :

2 PLACE DECIMALS ± NA FRACTIONS ± NA

3 PLACE DECIMALS ± NA ANGLES ± NA

Nuclear Energy

GENERAL ELECTRIC COMPANY
VNC, Pleasanton, CA

TITLE

BARREL RACK
CERTIFICATION DWG

FMF –

| | | | |
|---|---|---|---|
| MBUL DATE | DWG NO. 166D8066 | | REV. 1 |
| DWN NO. | COMPL STAT C | SH NO. 1 | CONT ON F |

# FIGURE WITHHELD UNDER 10 CFR 2.390

EQUIPMENT CLASS. CODE NA

| | | | | | |
|---|---|---|---|---|---|
| | | SAFETY RELATED<br>THIS ITEM IS OR CONTAINS A SAFETY RELATED ITEM ☐ YES ☒ NO | | | IEEE CLASS 1E<br>NUCLEAR SAFETY RELATED<br>☐ YES ☒ NO |
| | SIGNATURES | DAY | MO | YR | |
| DRAWN | L. MEEK | 26 | 07 | 94 | Nuclear Energy — GENERAL ELECTRIC COMPANY VNC, Pleasanton, CA |
| CHECKED | T. RAU | 26 | 07 | 94 | |
| DFTG | L. MEEK | 26 | 07 | 94 | TITLE |
| ENGRG | R. POMARES | 26 | 07 | 94 | MATERIAL BASKET CERTIFICATION DWG |
| APPLIED PRACTICES X | | | | ALL SURF. | FMF – MODEL 2000 CASK |
| UNLESS OTHERWISE SPECIFIED XXX | | | | | ISSUE DATE / DWG NO. 183C8356 / REV. 1 |
| TOLERANCES ON : | | | | | ERN NO. |
| 2 PLACE DECIMALS ± NA | FRACTIONS ± NA | | | | COMPL STAT C / SH NO. 1 / CONT ON F |
| 3 PLACE DECIMALS ± NA | ANGLES ± NA | | | | |

# 2.0 STRUCTURAL EVALUATION

This Chapter presents the structural evaluation of the Model 2000 Radioactive Material Transport Package to carry materials or contents with a maximum decay heat of 2000 watts, excluding irradiated fuel, and its conformance with all applicable structural criteria. Normal and hypothetical accident condition evaluations are performed in accordance with 10CFR71 [2.1] requirements. The engineering evaluations are presented to demonstrate the capability of the Model 2000 Transport Package to meet the regulatory requirement with the increased thermal loading of its contents under normal transport and hypothetical accident conditions. In addition, the Multifunctional rack is analyzed to show that it also meets these conditions. The Multifunctional rack evaluation is presented in Appendix 2.11.4. The Barrel rack, a solid steel cylinder, is capable to withstand the regulatory environment based in engineering judgment. The rack material is 100 % ultrasonic tested to assure void free material in accordance with the ASME Code.

The Model 2000 Transport Package has been previously certified by the Nuclear Regulatory Commission to carry up to 600 watts thermal loading of its contents. The report of the analyses is contained in the Safety Analysis Report for Model 2000 Radioactive Material Transport Package [2.2]. The engineering evaluation of this Chapter mainly consists of calculating thermal stresses using the finite element analysis. Furthermore, these thermal stresses are combined with the other stresses for the normal transport and hypothetical accident conditions. The results of these analyses are compared against the allowable stress limit criteria specified by Regulatory Guide 7.6 [2.4]. LIBRA Finite Element Computer Code is used in this evaluation.

LIBRA is a multi-purpose finite element computer code applicable to both static and dynamic analyses of linear and nonlinear structural systems. In addition, LIBRA code also includes a heat transfer program for the analysis of both steady-state and transient thermal distributions in structural systems. A series of exact solution type of problems and benchmark testing in the thermal and structural areas verify the accuracy of the analyses, Reference [2.2].

## 2.1 STRUCTURAL DESIGN

### 2.1.1 Discussion

The Model 2000 Transport Package consists of a welded overpack structure containing a steel-encased lead cask structure. The cask structure is a lead-filled 304 stainless steel weldment, cylindrical in shape, and measuring approximately 38.50 in. outside diameter (OD) by 71.0 in. high. The inner cavity is 26.50 in. inside diameter (ID) by 54.0 in. high. The lead shielding provided is approximately 4.0 in. of lead on the sides. The cask structure is shown in Figure 2.1. The cask body shell is made in its entirety of 1.0-in.-thick 304 stainless steel plate. At the bottom, the shells are welded to a 6.0-in.-thick 304 stainless steel forging. At the upper section, the containment shell joins a 9.0-in.-thick 304 stainless steel forging. This forging provides support and sealing surface to the cask seal. Also, it contains 15 equally spaced, internally threaded holes on a 32.25-in.-diameter bolt circle. Fifteen 1.25-in.-diameter ASTM A540 socket head screws attach the lid to the cask body during operation. The cask lid is a 1.0-in. thick 304 stainless steel forging encasing a lead cylinder 5.38 in. high. A 1.75-in.-thick flat plate is attached to the lid steel forging at the top. The plate thickness is reduced to 1.5 in. on the outer edge to accommodate the seal. At the bottom, one is 24.38 in. OD. The lid has a lifting lug for handling. The cask seal is composed of four rings of contoured elastomeric material bounded two in each surface, top and bottom, of a 0.125-in.-thick 6061 aluminum ring. The seal ring has a 34.0 in. OD and 28.0 in. ID. The cask is designed to shield and contain its radioactive material contents.

There are three penetrations into the cask cavity. One serves as a drain for the cask cavity and the second one as a vent. The drain hole goes from the center of the cavity bottom to the side of the outer surface. The vent line spirals through the cask lid around the center. These penetrations provide means to eliminate water from the cask cavity collected during underwater operations. A 1/2 NPT socket head pipe plug followed by a 1-3/4-1/2 UN cap closes both penetrations. The cap O-ring provides backup sealant to the pipe plug. The third penetration with the same closure arrangement is used as a testing port for the cask seal joint. It is located in the upper forging on the side surface of the cask.

The welded 304 stainless steel overpack structure, shown in Figure 2.2, is composed of two concentric cylinders, separated vertically by eight equally spaced tubes and horizontally by two tube sections. The external cylinder has a 48.5-in. OD and is approximately 83 in. long. The internal cylindrical shell is 40.5 in. ID. A 24-in. tube diameter toroidal shell is attached at both ends of the external cylinder, and a circular plate is welded across the inner region of the torus. The internal cylinder is closed at each end by circular plates. All materials are 0.5 in. thick with the exception of the space tubes and toroidal shells. The vertical tubes are 3 in. OD, 0.25 in. thick, while the horizontal tube sections are 7.25 in. OD, 0.375 in. thick. The toroidal shells may be fabricated using four 90° elbows (or two 180° returns). However, the Model 2000 toroidal shell wall thickness range is limited to 0.5 in. min. to 0.76 in. max. The overpack structure separates near the bottom end to allow access to the lead cask. A collar 0.75 in. thick and 4 in. wide is attached in this area to provide hearing surface for the connecting bolts. A total of 15 1-3/8-in.-diameter ASTM A540 shoulder screws join both portions of the overpack structure.

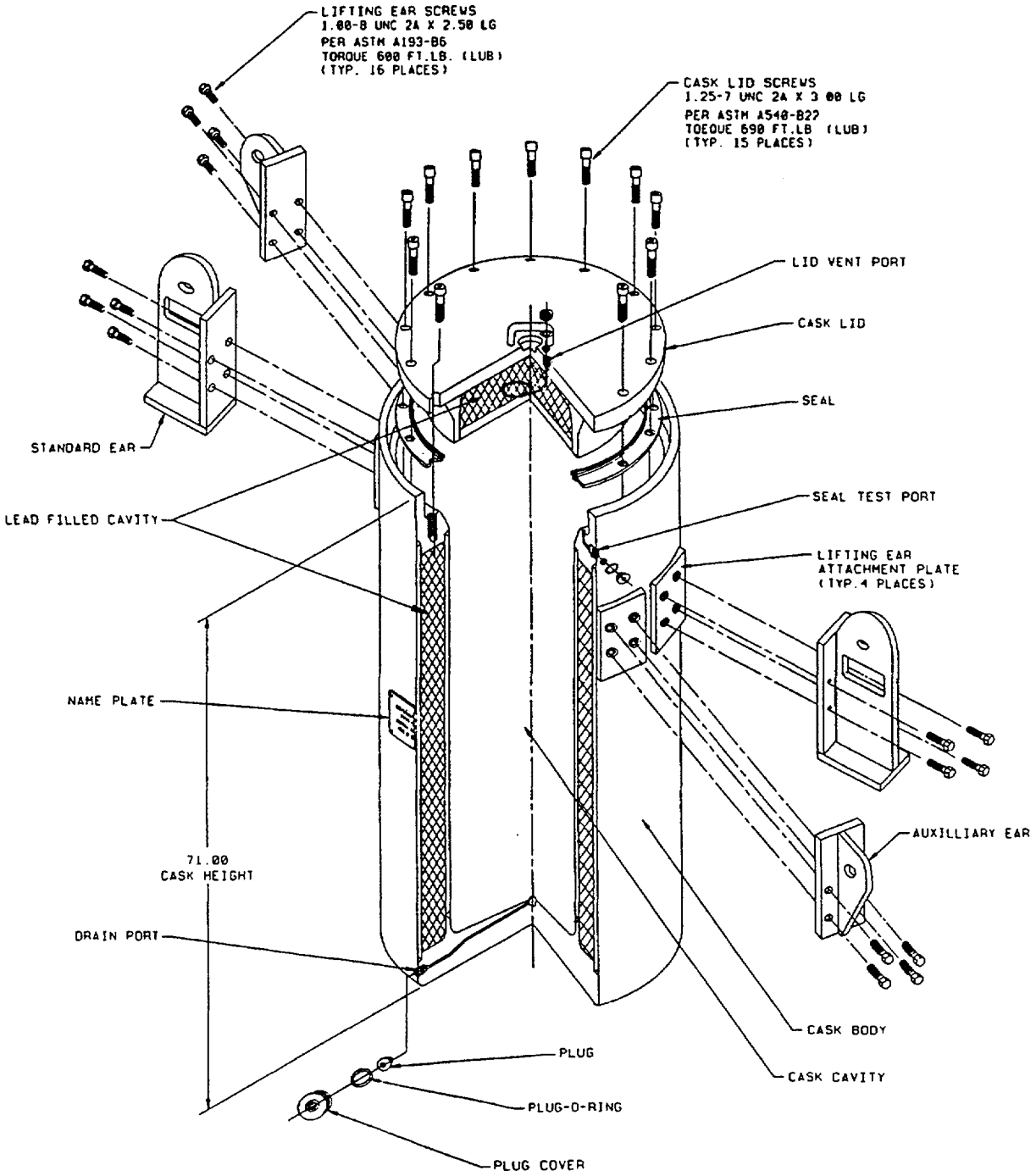


**Figure 2.1. Model 2000 Cask**

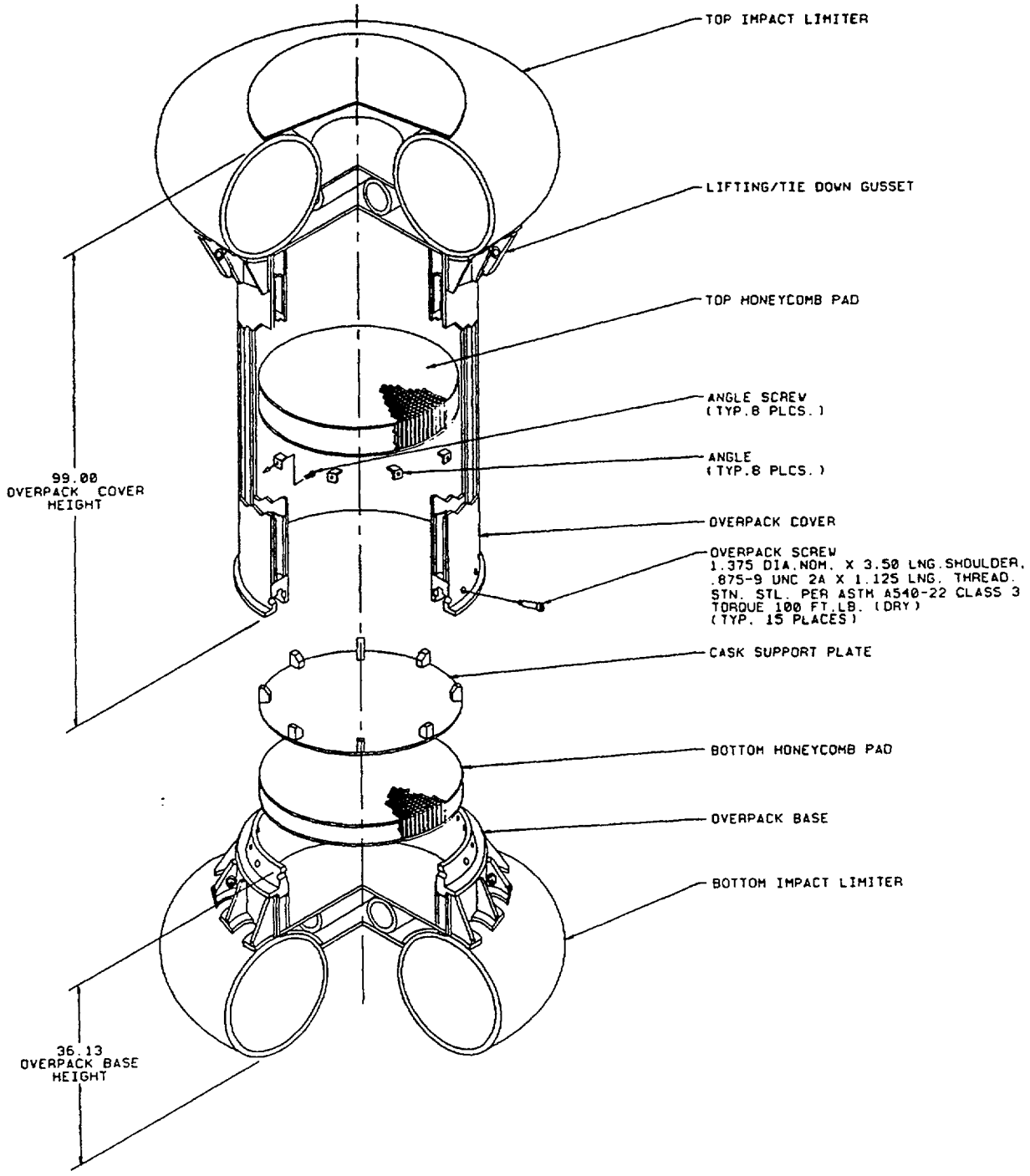


**Figure 2.2. Model 2000 Overpack**

The toroidal shell of the overpack structure acts as an energy-absorbing device during the postulated drop conditions. In addition, the overpack structure provides thermal shielding for the lead cask in the event of a fire.

A total of 20 reinforcing ribs cradle the toroidal shell to the vertical cylinder. Four of the ribs provide tie-down points for the transport package during transportation. Means for operational lifting and transfers are provided by attaching a spreader bar designed for crane handling. The spreader bar is not part of the transport packaging.

There is a 6-in.-thick aluminum honeycomb pad attached to the top inner surface of the overpack structure. A 4-in.-thick aluminum honeycomb pad covered by a 1/2-in.-thick circular plate provides a surface base for the lead cask structure. These honeycomb pads are included in the overpack structure design to assure a uniform loading distribution on the cask surface during the postulated free-drop events.

**2.1.1.1 General Description of the Finite Element Model.** The analyses presented here use the same finite element model given in the previous applications, References [2.2] and [2.3]. The finite element model of the cask structure is shown in Figure 2.3. This model represents the cask structure in its entirety. The model is axisymmetric with the lead material being permitted to become plastic and the steel material being maintained in the elastic range. This technique still allows superposition of different load cases on the steel components of the containment vessel. By allowing the lead to become inelastic, a realistic assessment is achieved for conditions such as the free drop condition, where the support provided by the lead to the shells is diminished. In addition, the same axisymmetric model is used with nonsymmetric loadings for conditions such as side drop and CG Over Corner Drop condition.

The cask model is composed of 555 quadrilateral elements and 942 nodes. Two types of quadrilateral elements are employed in the model. The inner and outer shells of the cask are represented by eight-node isoparametric 2D elements, and the remainder of the structure (including the lead) is modeled by four-node isoparametric 2D elements. At the interface of the lead shielding and the steel cladding, the nodes are doubly numbered. The concurrent nodes on the lead and on the steel are constrained by means of the Lagrangean constraints feature of the finite element program, LIBRA. This allows unison motion of these materials in the radial direction of the model (normal to the shell longitudinal axis) but allows independent motion in the longitudinal direction. This type of modeling permits the lead to impose hydrostatic pressure on the cladding without applying shear forces to the cladding. Other constraining and boundary conditions are imposed on the model, depending upon the loading configuration under investigation. The applied boundary conditions are described with the loading configuration at each pertinent subsection.

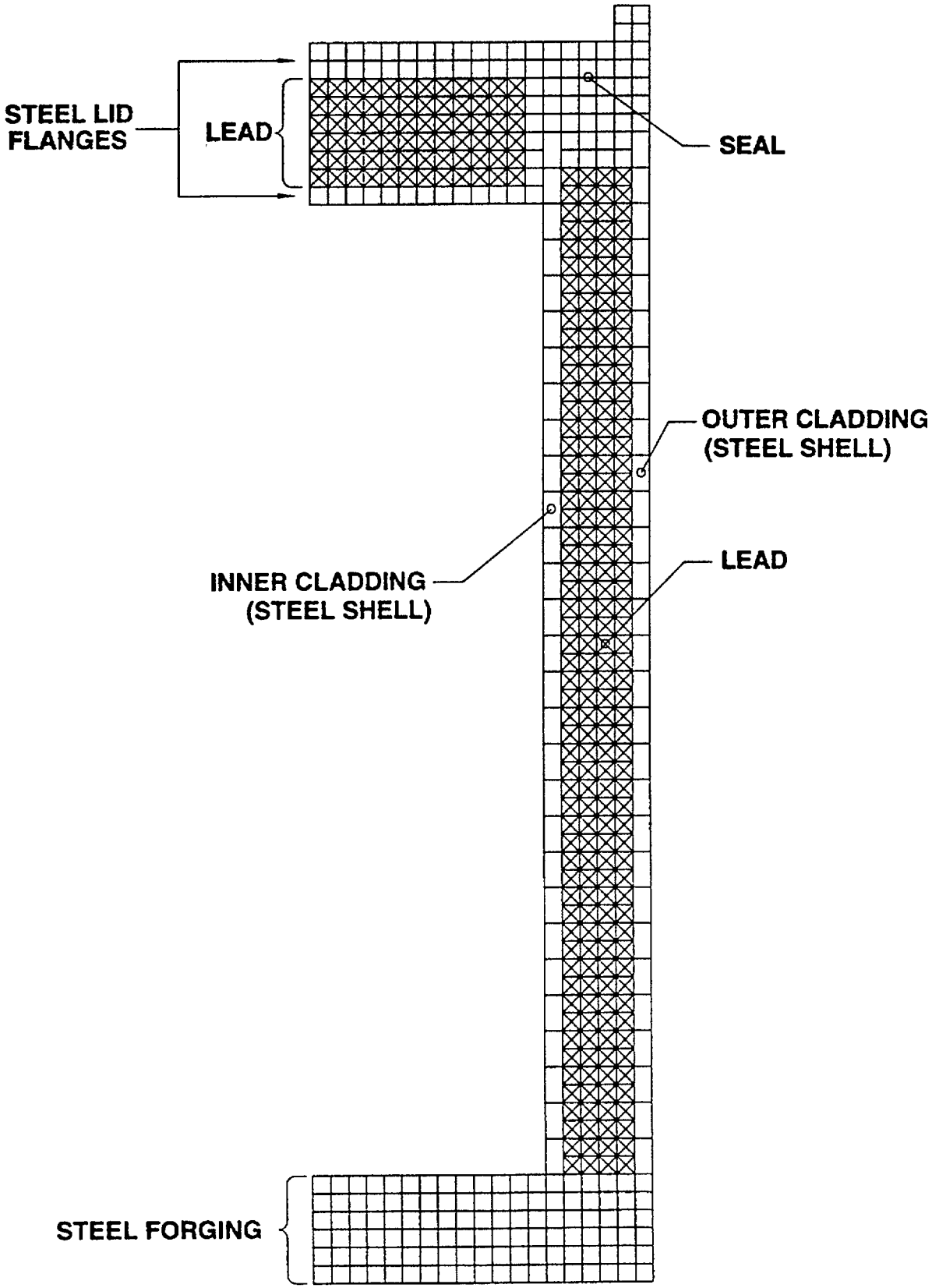


**Figure 2.3. Model 2000 Cask, Finite Element Structural Model**

### 2.1.2 Design Criteria

**2.1.2.1 Allowable Stresses.** This section defines the allowable limits for primary membrane ($P_m$), primary bending ($P_b$), secondary (Q), thermal stresses and the required factor of safety against instability (i.e. buckling) for all components in the Model 2000 Transport Package according to Regulatory Guide 7.6 [2.4] and Subsection NB of ASME Boiler and Pressure Vessel Codes [2.5]. Table 2.1 summarizes the allowable criteria used in this analysis.

**Table 2.1. Allowable Stress Limit Criteria**

| Stress Condition | Allowable Stress |
|---|---|
| Normal Condition | |
| $P_m$ | $S_m$ |
| $P_m + P_b$ | $1.5\ S_m$ |
| $P_m + P_b + Q$ | $3\ S_m$ |
| Bearing Stress | $S_y$ |
| Pure Shear | $0.6\ S_m$ |
| Fatigue, $S_{alt}$ | $S_a$ @ Life Cycles (1) |
| Accident Condition | |
| $P_m$ | Lesser of $2.4\ S_m$ and $0.7\ S_u$ |
| $P_m + P_b$ | Lesser of $3.6\ S_m$ and $S_u$ |
| $P_m + P_b + Q$ | Need not be evaluated |
| Bearing Stress | Need not be evaluated |
| Pure Shear | $0.42\ S_u$ |
| Buckling | ASME Code Case N-284 [2.6] |
| Notes: (1) $S_a$ obtained from fatigue curves Figure I-9.2.2, Appendix I [2.7] | |

**2.1.2.2 Load Combinations.** The load combinations used in the Model 2000 Transport Package analysis are developed in accordance with Regulatory Guide 7.8 [2.8] with modifications to incorporate the changes outlined in the 1983 issue of 10CFR71. The resulting load combinations are shown in Table 2.2.

**Table 2.2. Summary of Load Combinations for Normal and Hypothetical Accident Conditions of Transport**

| Normal or Accident Condition | Applicable Initial Condition | | | | | | | | | |
|---|---|---|---|---|---|---|---|---|---|---|
| | Ambient Temperature (°F) | | Insolation | | Decay Heat | | Inter. Pressure | | Max. Weight of Contents | Fab. Stress |
| | 100 | -20 | Max. | None | Max. 2000 Watts | Note | Max 30 psia | Min 14.7 psia | | |
| Normal Conditions | | | | | | | | | | |
| Hot Environment - 100°F Ambient Temp. | X | | X | | X | | X | | | X |
| Cold Environment - -40°F Ambient Temp. | | | | X | X | | X | | | X |
| | | | | X | | X | | X | | X |
| Increased external pressure 20 psia | X | | X | | X | | X | | | X |
| | | X | | X | | X | | X | | X |
| Min. external pressure 3.5 psia | X | | X | | X | | X | | | X |
| | | X | | X | X | | X | | | X |
| Vibration and shock - Normally incident to the mode of transport | X | | X | | X | | X | | | X |
| | | X | | X | X | | X | | | X |
| | | X | | X | | X | | X | | X |
| Free Drop - 1 foot drop | X | | X | | X | | X | | X | X |
| | | X | | X | X | | X | | X | X |
| | | X | | X | | X | | X | X | X |
| Accident Conditions | | | | | | | | | | |
| Free Drop - 30 foot drop | X | | X | | X | | X | | X | X |
| | | X | | X | X | | X | | X | X |
| | | X | | X | | X | | X | X | X |
| Puncture - Drop onto bar | X | | X | | X | | X | | X | X |
| | | X | | X | X | | X | | X | X |
| | | X | | X | | X | | X | X | X |
| Thermal - Fire Accident | X | | X | | X | | X | | | X |

#### 2.1.2.3 Miscellaneous Structural Criteria

**2.1.2.3.1 Brittle Fracture.** All structural components of the Model 2000 Transport Package with exception of the bolts are fabricated from austenitic stainless steels Type 304. Since this material does not undergo a ductile to brittle transition in the temperature range of interest (down to -40°F), it is not subjected to brittle fracture on this application.

The bolts are fabricated from ferritic steel alloys conforming with ASTM Specifications A193 GR B6 and A540 GR B22, but they are excluded because NUREG/GR-1815[2.7], Section 5 states that "bolts are generally not considered as fracture-critical components because multiple load paths exist and because bolted systems are designed to be redundant".

**2.1.2.3.2 Fatigue.** The fatigue stresses of the Transportation Package are mainly caused by two conditions - by the shock and vibration during the transportation and by cyclic thermal stresses during the-service. The fatigue damage is not a concern for the package because of low stresses for shock and vibration condition, and small number of cycles for the thermal stresses condition. However, the fatigue analysis is done in detail in Appendix 2.11.1.

**2.1.2.3.3 Buckling.** The Model 2000 cask shells, under normal and accident conditions, are potentially subject to forces which could cause buckling instability (e.g., shrink-fit pressure of lead onto the inner shell, side drop event forces, etc.). Buckling is an unacceptable failure mode for the containment vessel per Reference [2.6]. A detailed buckling analysis is done and presented in Appendix 2.11.2.

## 2.2 COMPONENT WEIGHTS

The total calculated weight of the Model 2000 transport packaging and contents is approximately 33,550 lbs. The major subassemblies are the cask body, the closure lid and the cask overpack. The weights of the package components are given in Table 2.3.

**Table 2.3. Model 2000 Transport Package Component Weights**

| Component | Maximum Weight (lbs) |
|---|---|
| Cask Body | 16,000 |
| Closure Lid | 1,900 |
| Standard Ears | (200) |
| Auxiliary Ears | (80) |
| Cask Overpack | 10,200 |
| Maximum Contents | 5,450 (1) |
| Total | 33,550 (2) |

Notes: (1) See Section 2.11.5
(2) Weights of ears not included. Ears are detached during transport.

## 2.3 MECHANICAL PROPERTIES OF MATERIALS

The transport package is fabricated from pig lead per Federal Specification QQ-L-171e and 304 stainless steel per ASTM A240. The mechanical properties used in the structural analysis are listed in Tables 2.4 and 2.5.

The Model 2000 packaging includes two aluminum honeycomb pads located at the top and bottom of the cask structure. This energy-absorbing material complies with Military Specification MIL-C-7438F, Reference [2.9].

**Table 2.4. Mechanical Properties of Lead [2.10]**

| Temp. (°F) | E ($10^6$ psi) | $\mu$ | $\alpha$ ($x10^{-6}$ 1/°F) | $\rho$ [2.11] (lb/in$^3$) | $\sigma_y$ [2.12] (psi) |
|---|---|---|---|---|---|
| -50 | - | 0.43 | 13.94 | 0.4097 | 810 |
| -40 | 2.58 | 0.43 | - | 0.4097 | 795 |
| 75 | 2.41 | 0.43 | 16.00 | 0.4097 | 620 |
| 100 | 2.38 | 0.43 | 16.03 | 0.4097 | 580 |
| 150 | 2.30 | 0.43 | 16.12 | 0.4097 | 550 |
| 200 | 2.21 | 0.43 | 16.26 | 0.4097 | 505 |
| 250 | 2.14 | 0.43 | 16.46 | 0.4097 | 495 |
| 300 | 2.04 | 0.43 | 16.70 | 0.4097 | 390 |
| 400 | 1.94 | 0.43 | 17.00 | 0.4097 | 250 |

**Table 2.5. Mechanical Properties of Stainless Steel [2.13]**

| Temp. (°F) | E ($10^6$ psi) | $\mu$ | $\alpha$ ($x10^{-6}$ 1/°F) | $\rho$ [2.14] (lb/in$^3$) | $\sigma_y$ ($10^3$ psi) |
|---|---|---|---|---|---|
| -100 | 29.4 | 0.30 | 7.35 | 0.29 | - |
| 70 | 28.3 | 0.30 | - | 0.29 | - |
| 100 | - | 0.30 | 8.03 | 0.29 | 30.0 |
| 200 | 27.7 | 0.30 | 8.37 | 0.29 | 25.0 |
| 300 | 27.1 | 0.30 | 8.70 | 0.29 | 22.5 |
| 400 | 26.6 | 0.30 | 8.97 | 0.29 | 20.7 |
| 500 | 26.1 | 0.30 | 9.23 | 0.29 | 19.4 |
| 600 | 25.4 | 0.30 | 9.42 | 0.29 | 18.2 |
| 700 | 24.8 | 0.30 | 9.57 | 0.29 | 17.7 |
| 800 | 24.1 | 0.30 | 9.71 | 0.29 | 16.8 |

## 2.4 GENERAL STANDARDS FOR ALL PACKAGES

### 2.4.1 Minimum Package Size

The smallest overall dimension of the Model 2000 Transport Package is 131.5 inches. The cask overall dimensions are 71.0 in. high and 38.5 in. outside diameter.

### 2.4.2 Tamperproof Feature

A lock wire and seal of the type that must be broken is installed across the overpack joint section. This seal while intact would be evidence that the package has not been opened by unauthorized persons.

### 2.4.3 Positive Closure

The Model 2000 Transport Package is an assembly for shipping radioactive material contents inside of the cask. The cask is sealed using a gasket and 15 1.25-in. socket head screws. In turn, the cask is contained by the overpack structure which is bolted closed during transport by 15 shoulder bolts. With this double closure, overpack and cask, inadvertent opening of the cask cannot occur. The vent and drain ports on the cask each are plugged and sealed by pipe plugs and straight thread caps with O-rings.

### 2.4.4 Chemical and Galvanic Reactions

The Model 2000 cask is fabricated from Type 304 stainless steel and pig lead. The lead is completely encased in the stainless steel material. This construction excludes moisture at the stainless boundary, thus assuring no galvanic or deleterious reactions could occur. The cask contents contact the stainless cavity surface. The radioactive material contents are in solid form and typically are placed in an inner container. GE's experiences in operating other transport packages with similar arrangements show that chemical, galvanic or other reactions between the cask cavity surface and the radioactive material containers, or between these containers and their solid contents, do not occur.

## 2.5 LIFTING AND TIE-DOWN STANDARDS FOR ALL PACKAGES

The regulations require that lifting devices which are a structural part of the package shall be capable of supporting three times the weight of the loaded package without generating stress in any material of the package in excess of its yield stress. Since the existing cask lifting devices and tie-downs have been fully analyzed in the reference [2.2] and increased contents thermal loading do not affect the lifting and tie-down devices, they are not addressed herein.

## 2.6 NORMAL CONDITIONS OF TRANSPORT

The Model 2000 Transport Package is able to withstand the normal conditions of transport without releasing radioactive material from the cask (containment vessel). This normal condition of transport is defined in Section 71 of Reference [2.1]. This is demonstrated in the following subsections, where each normal condition is addressed and shown to meet the criteria previously

discussed in Subsection 2.1.2. Because the containment vessel is the primary area of design concern, the evaluation is performed on the cask. The toroidal shells are not addressed herein, since it has been fully analyzed in Reference [2.2].

### 2.6.1 Heat

The thermal evaluation for the normal heat condition is presented in Section 3.4. The normal heat condition consists of exposing the cask to direct sunlight and 100°F still air. Isolation on the package is specified in Reference [2.8]. An initial temperature field of 70°F and a maximum internal heat of 2000 watts are used for the evaluation.

The thermal evaluation is performed using the finite element method with the LIBRA program. Thermal model is given in Figure 2.4. It is constructed by adding the overpack structure model to the same structural cask model presented in Subsection 2.1.1. This one-to-one nodal correspondence between the structural model and the thermal model allows direct transfer of temperature fields from the thermal module of the LIBRA program to the structural module. The thermal model is composed of 2,201 nodes and 2,172 elements. A detailed description of the model is given in Section 3.4.

**2.6.1.1 Summary of Pressures and Temperatures.** Temperatures throughout the package resulting from normal conditions of transport are presented in Table 2.6. As indicated, all temperatures remain below or at 341°F. However, the average helium temperature in the cask cavity of 440°F is conservatively calculated as an average of the maximum cavity wall temperature (341°F) and the maximum contents temperature (537°F from Section 3.7.3). The pressure corresponding to 440°F is 25.5 psia (refer to Section 3.7.3 for calculations). This pressure does not exceed the design pressure of 30 psia for which the cask structure is analyzed. Therefore, the package will withstand pressures and temperatures in excess of those encountered in normal transport.

**Table 2.6. Maximum Normal Condition Temperatures**

| Package Component | Max Temp (°F) |
|---|---|
| Cask Cavity Wall | 341 |
| Lead Shield | 338 |
| Cask Seal Area | 315 |
| Cask Outer Surface | 322 |
| Overpack Inner Surface | 262 |
| Overpack Accessible Outer Surface | 197 |

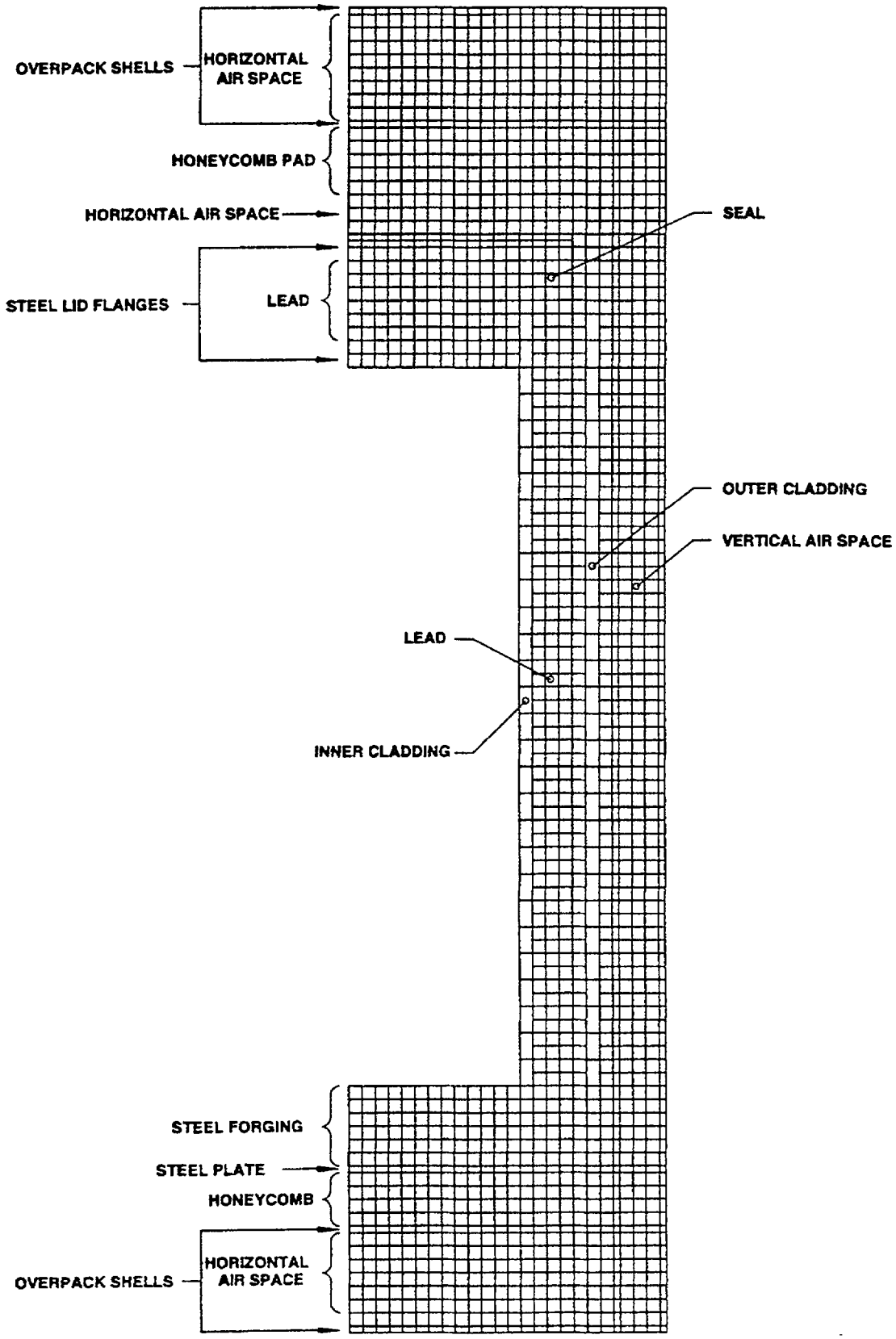


**Figure 2.4. Model 2000 Package, Finite Element Thermal Model**

**2.6.1.2 Differential Thermal Expansion.** The effects of thermal gradients on the Model 2000 cask are investigated by finite element analyses. For normal conditions of transport, the analyses identified two areas of maximum stresses. One area is located on the cask body at the juncture of the cask's shells with the bottom forging. This is attributed to the differential radial displacement of the shells relative to the forging. The second area is on the cask lid where the inner lid plate makes a contact with the lid wall cylinder. In this case, the axial expansion of the lead is mainly responsible for the stresses.

These areas are shown in Figure 2.5, which depicts a cross section of the cask with the areas of highest thermal stress marked as A and B. This figure also shows the finite element model detail of these areas. In these details, element and node numbers are included. In addition, the results of the finite element analysis stress intensity (Q) in these areas are tabulated in the figure for detail A and for detail B.

Thermal stresses are classified as secondary stresses. The allowable stress intensity for primary plus secondary is equal to 3.0 $S_M$ (66.0 ksi for SS304): it is concluded that thermal stresses will not limit the design of the Model 2000 cask.

**2.6.1.3 Stress Calculation.** The effects of thermal gradients, design pressure, and mechanical loads due to lead pour and lead cool-down during fabrication on the Model 2000 cask are evaluated within this section. The bulk of the analyses are performed using the finite element method with the LIBRA program. The analytical model employed is presented in Paragraph 2.1.1.1. Material property used, application of loads, boundary conditions applied, and resulting stress intensity values throughout the structure are discussed with the presentation of each analysis. In addition, tabulations of principal stresses and stress categories (e.g., primary, secondary, etc.) are given in Appendix 2.11.3 for each loading condition and loading combination.

**2.6.1.3.1 Thermal Stresses.** Figure 2.6 represents the locations and the corresponding element numbers where the stresses are monitored. For locations 7 through 16, subscripts a and b refer to the inner and outer surface of the element, respectively.

The highest thermal stresses in the Model 2000 cask arise from an ambient temperature of 100°F, the maximum decay heat of 2000 watts and the maximum solar load. Figures 2.7 and 2.8 give the thermal stress intensity values [Q, ksi] throughout the cask for normal conditions of transport. Stresses resulting from fabrication are added. These figures show the cask lid separated from the cask model. This is done to clearly present the data.

The following mechanical properties are calculated from the materials properties tables in Section 2.3 at 221°F. All material properties are not very sensitive to the temperature variations except the yield strength of lead, which decreases as temperature increases. Although the temperature of the lead shield area varies from 221°F for condition 6, and to 338°F for condition 1 (See Subsection 3.1.2 for description of these conditions), properties at 221°F are used conservatively so that stresses imposed by the lead is maximized.

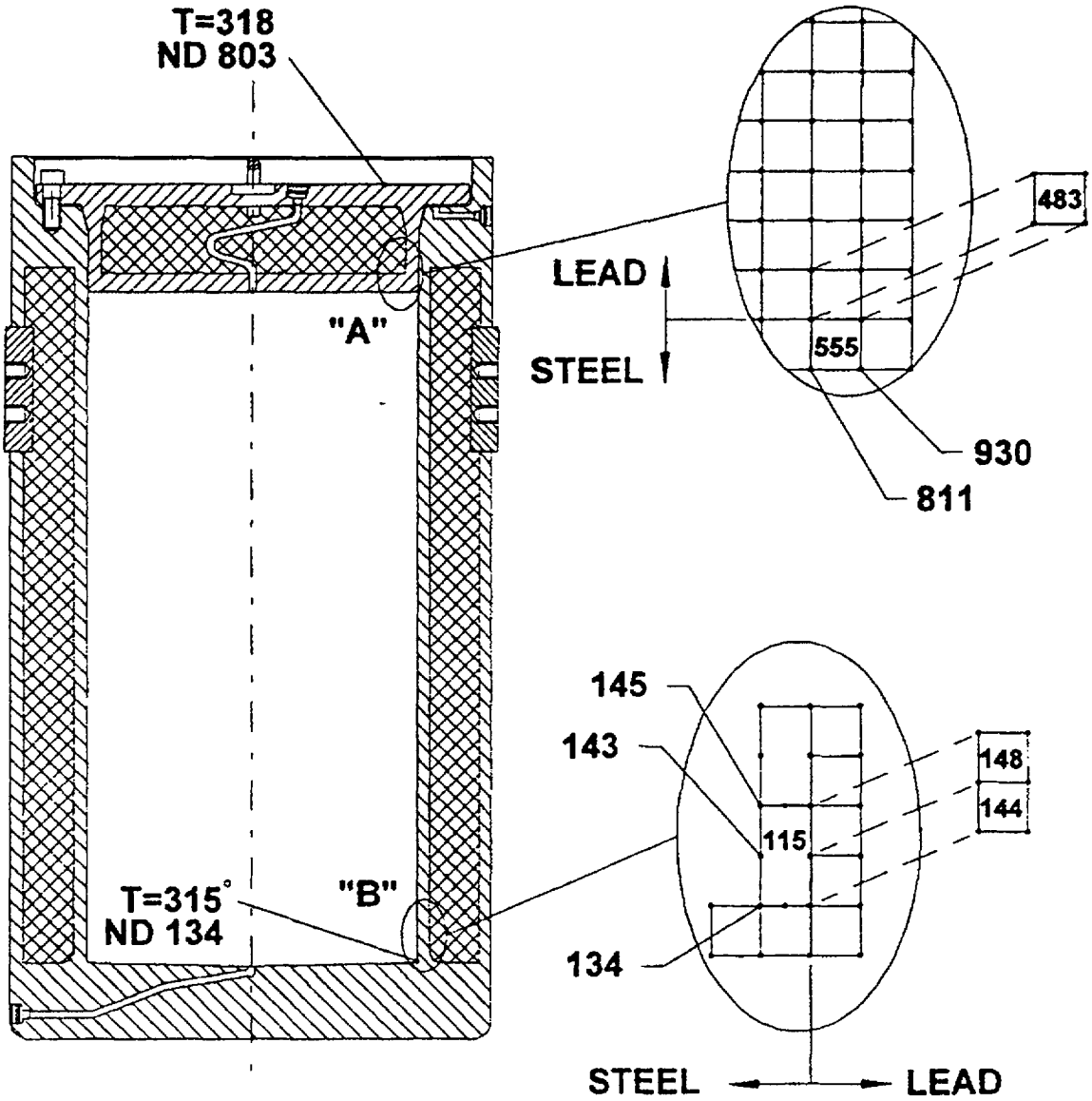


| | EL NO | Q (ksi) |
|---|---|---|
| DETAIL "A" | 555 | 5.69 |
| DETAIL "B" | 115 | 21.9 |

**Figure 2.5. Element Detail of Maximum Stresses and Temperatures (°F) for 100°F Ambient with Maximum Insolation and Maximum Decay Heat**

**Material Properties @ 221°F (based on Tables 2.4 and 2.5)**

| | **304 SS** | **Lead** |
|---|---|---|
| Modulus of Elasticity, E (psi) | $27.6 \times 10^6$ | $22.0 \times 10^5$ |
| Poisson's Ratio, $\mu$ | 0.30 | 0.43 |
| Coefficient of Thermal Expansion, $\alpha$ (1/°F) | $0.844 \times 10^{-5}$ | $0.163 \times 10^{-4}$ |
| Mass Density, $\rho$ (lbm/in$^3$) | $0.751 \times 10^{-3}$ | $0.106 \times 10^{-2}$ |
| Yield Strength, $\sigma$ (psi) | $1.00 \times 10^6$ (1) | 502.9 |
| Modulus of Plasticity, $\sigma_p$ (psi) | 0 | 32,000 |
| Note: (1) This fictitious value assures that the steel material remains elastic in the analysis. | | |

These analyses are performed for the steady-state conditions with the maximum decay heat. Another condition is the maximum solar load. For these analyses, the degree of freedom along the vertical direction (y-direction) are fixed at the outside surface of the cask's bottom. The model is allowed to expand radially and upward from this boundary. The temperature field created by the thermal analysis is applied to the structural model. At the lead/steel interface, the lead is free to move vertically along the walls of the steel shells and radially at each end of the lead cylinders (cask body and lid).

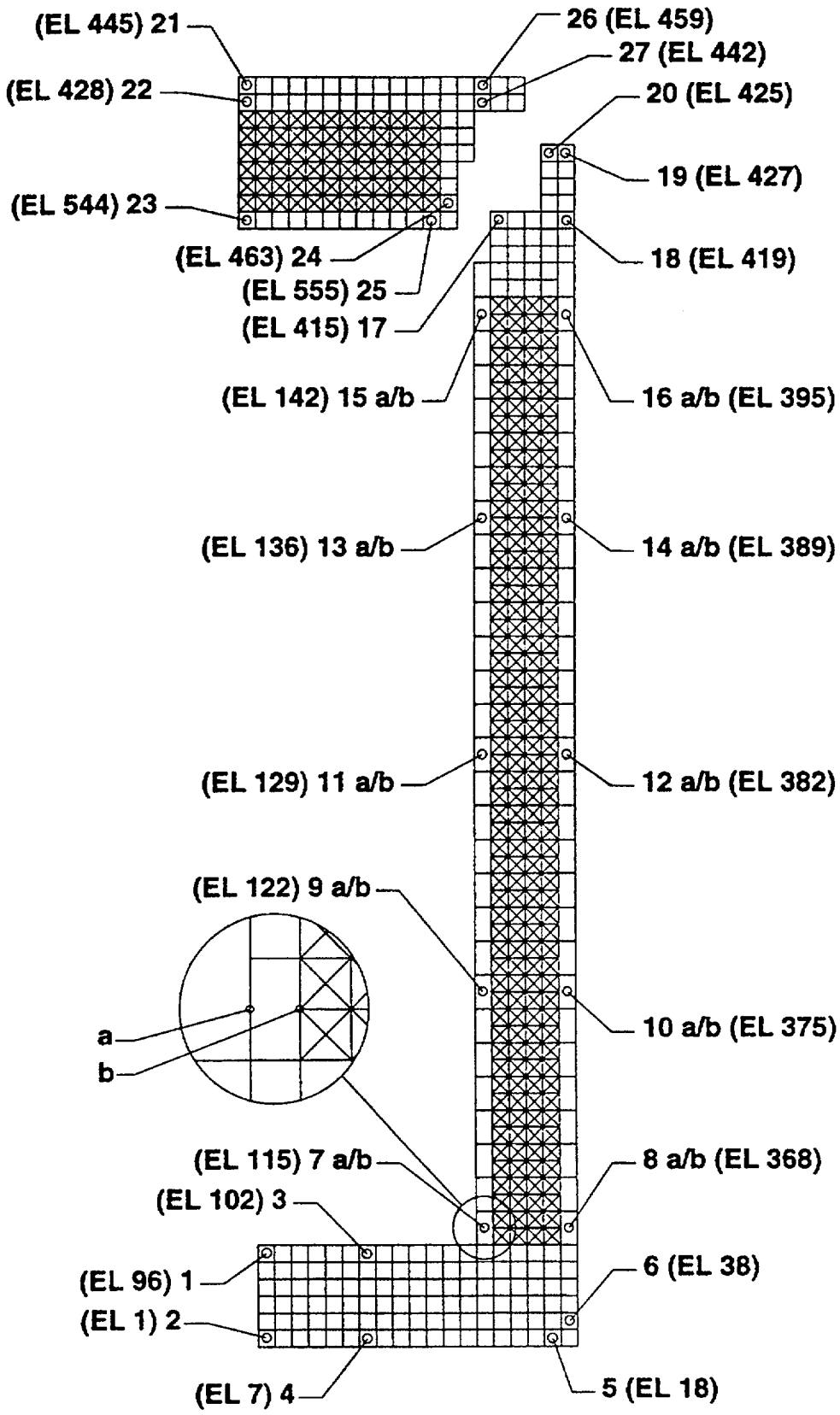


**Figure 2.6. Stress Point Locations with Element Numbers**

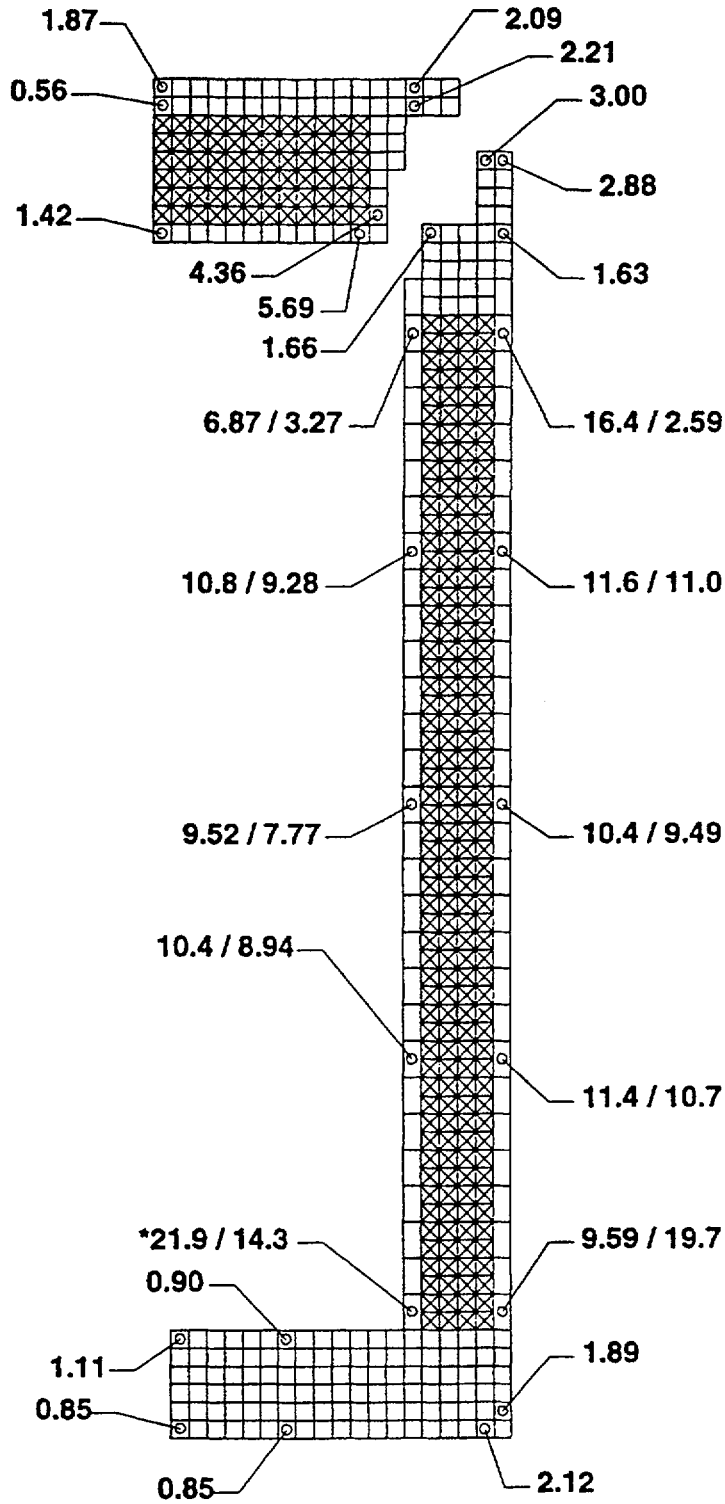


*Max Stress Location

**Figure 2.7. Model 2000 Cask – Thermal Stress Analysis (Q, ksi) Steady-State Condition; 100°F Ambient Temperature, Maximum Decay Heat Plus Maximum Insolation**

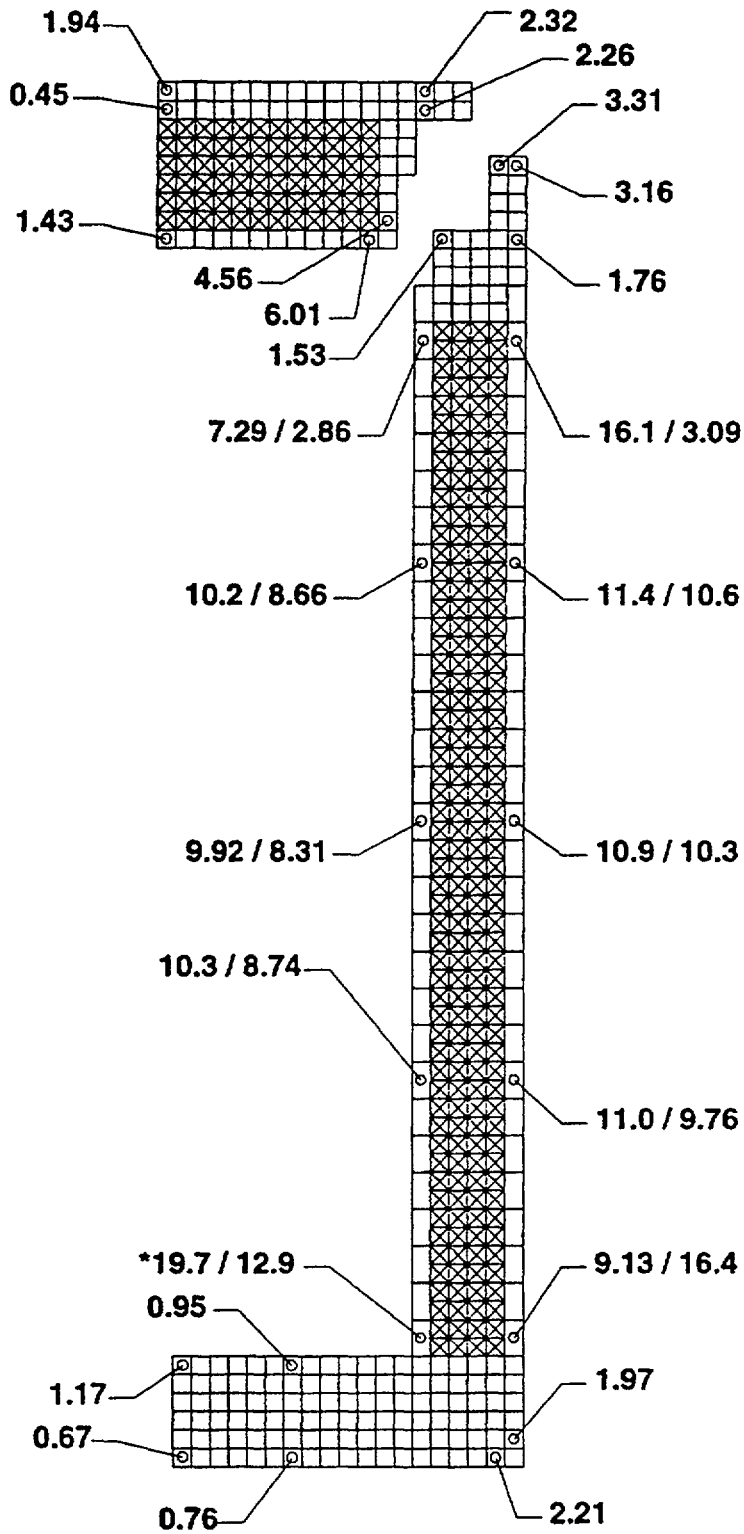


*Max Stress Location

**Figure 2.8. Model 2000 Cask – Thermal Stress Analysis (Q, ksi) Steady-State Condition, 100°F Ambient Temperature and Maximum Decay Heat**

**2.6.1.3.2 Design Pressure Stresses.** As discussed in paragraph 2.6.1.1, the increased contents heat loading causes the internal pressure, under normal conditions to be 23 psia, which is still less than the design internal pressure of 30 psia. The stresses in the cask produced by the 30 psia internal pressure were presented in Reference [2.2], and the results are repeated here in Figure 2.9.

**2.6.1.3.3 Fabrication Stresses.** Due to differential thermal expansion of lead and stainless steel from lead pouring and shrinkage during fabrication of the cask, and at low temperatures, stresses develop. These fabrication stresses are fully analyzed in the Reference [2.2], and are repeated here in Table 2.7. These fabrication stresses are combined with thermal stresses for other conditions of normal transport; and these combined stresses are then compared with the allowable values given in Subsection 2.1.2.

**Table 2.7*. Fabrication Stresses Due to Lead Pouring**

| Temp. (°F) | Inner Shell Stress (psi) | | | Outer Shell Stress (psi) | | | Yield Stress (psi) |
|---|---|---|---|---|---|---|---|
| | $\sigma_1$ | $\sigma_2$ | $\sigma_3$ | $\sigma_1$ | $\sigma_2$ | $\sigma_3$ | $S_y$ |
| 620(1) | 0 | 394 | -21.6 | 0 | -308 | -21.6 | Liquid |
| 70 | 0 | -2,070 | -150 | 0 | 0 | 0 | 620 |
| -20 | -3,950 | -2,548 | -185 | 0 | 0 | 0 | 765 |
| -40 | -3,709 | -2,658 | -193 | 0 | 0 | 0 | 795 |
| Note: (1) Liquid State | | | | | | | |

* Refer to Reference [2.2], Table 2.6.1.3.1

**2.6.1.4 Comparison With Allowable Stresses.** Load combinations and comparisons with allowable stress limits are presented in Subsection 2.6.10. In that section the resulting stresses from all normal conditions of transport are combined and compared against the criteria given in Subsection 2.1.2. Further, a series of tables which shows the combined stresses at each point is given in Appendix 2.11.4. The combined stresses are classified by type (e.g., primary, secondary, membrane, bending, etc.) as specified in Regulatory Guide 7.6, Reference [2.4]. The stresses are combined as required in Regulatory Guide 7.8, Reference [2.8].

### 2.6.2 Cold

The shipping package must be able to withstand an ambient temperature of 40°F and -20°F in still air and in the shade. The material of construction of the Model 2000 package is not adversely affected by these low temperature conditions. Brittle fracture of the package components is not a concern, as discussed in Subsection 2.1.2. However, consideration is given to resulting stresses because of thermal gradients throughout the package under these conditions and to the shrinkage of the lead onto the inner shell of the cask. The package is analyzed under these ambient conditions with the maximum decay heat. The stress intensity values (Q, ksi) obtained in these analyses are presented in Figures 2.10 and 2.11 for -20°F and -40°F ambient temperature, respectively.

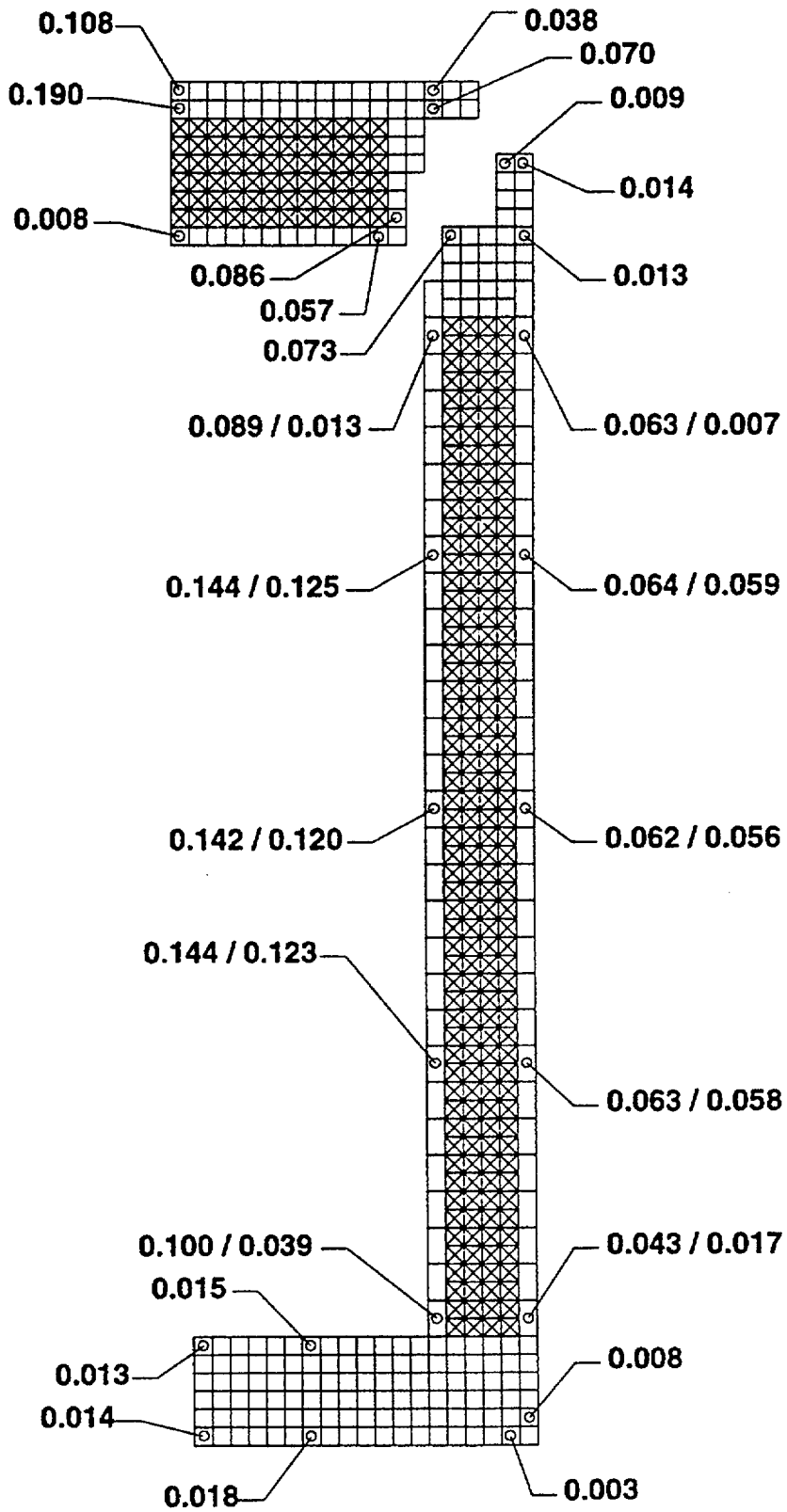


**Figure 2.9.* Model 2000 – Stress Intensity ($P_m + P_b$, ksi); Internal Pressure, 30 psia**

*Refer to reference [2.2], Figure 2.6.1.3.2a

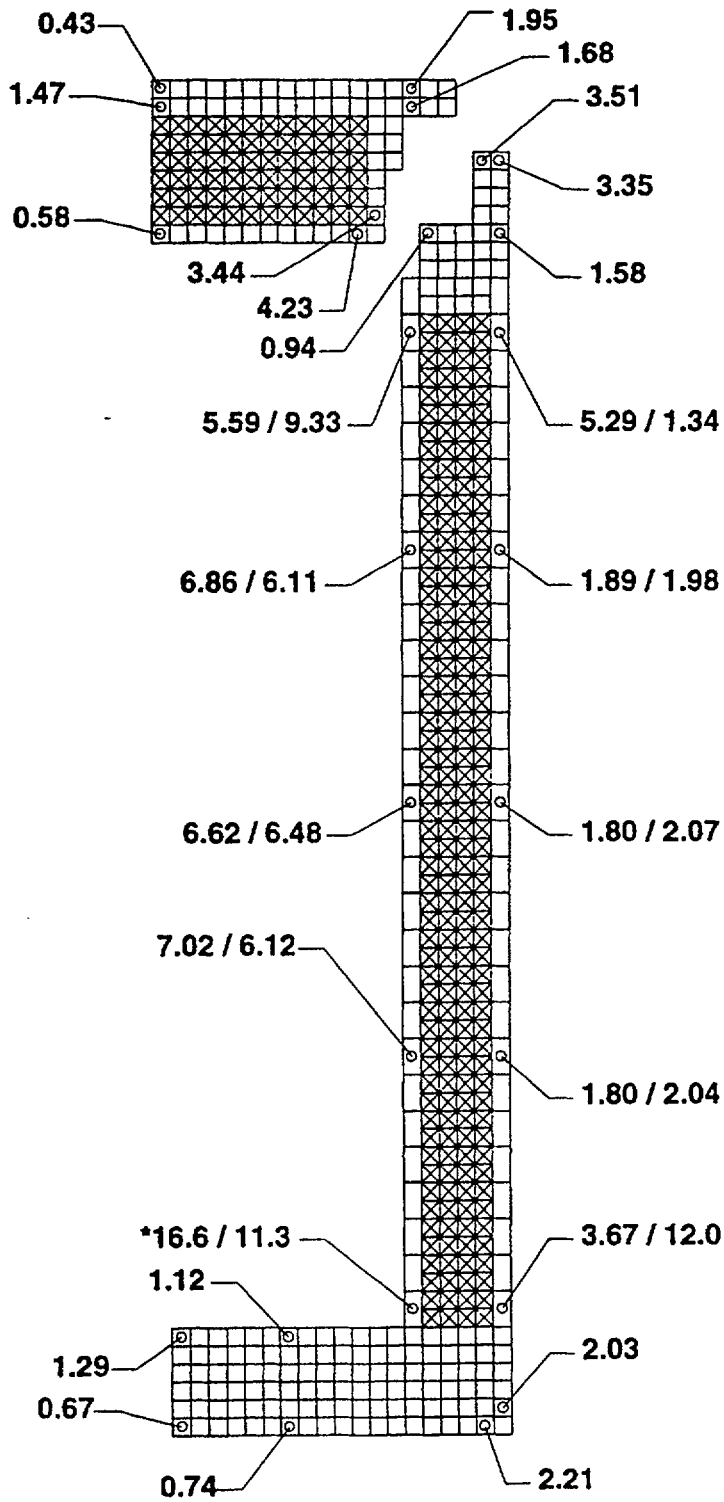


*Max Stress Location

**Figure 2.10. Model 2000 Cask – Thermal Stress Analysis (Q, ksi) Steady-State Condition, -20°F Ambient Temperature and Maximum Decay Heat**

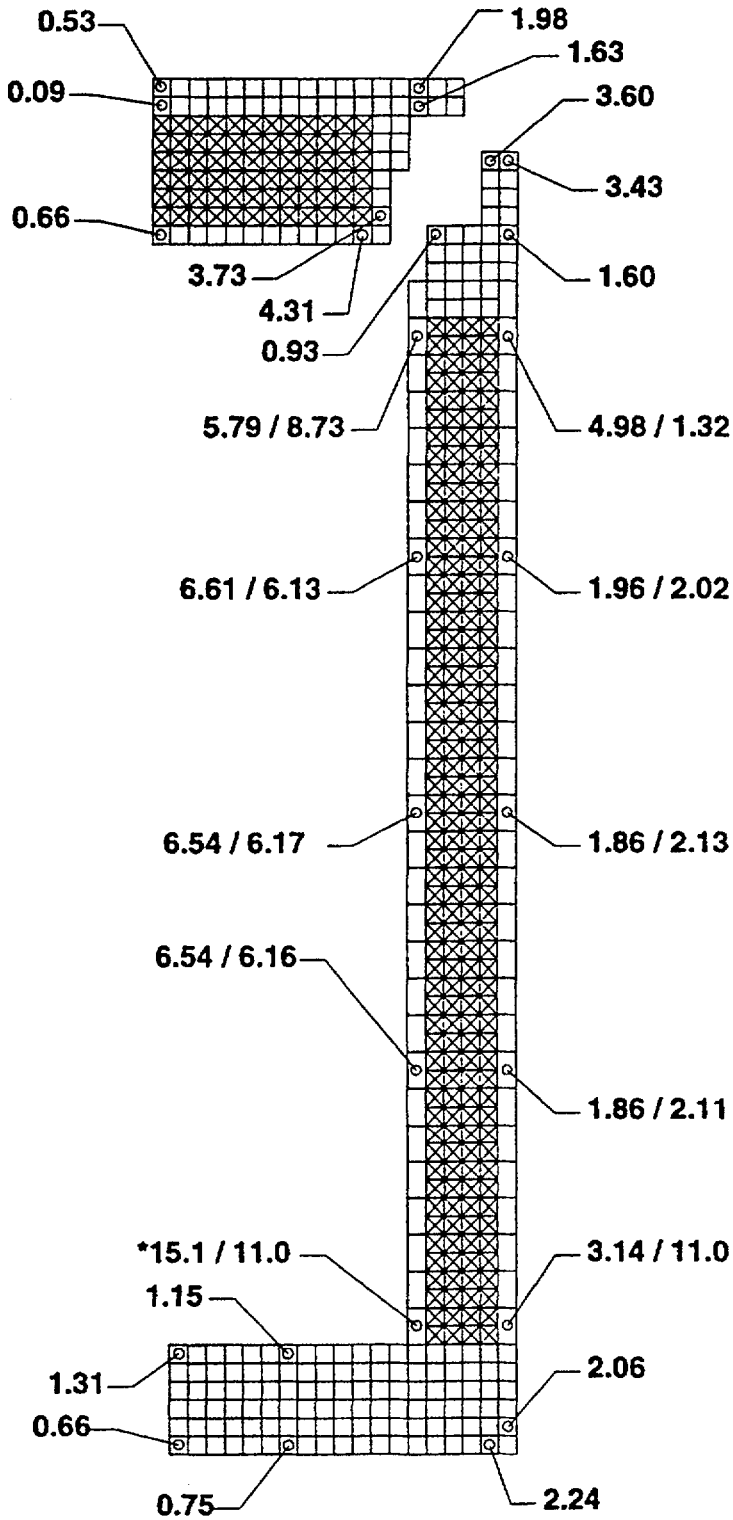


*Max Stress Location

**Figure 2.11. Model 2000 Cask – Thermal Stress Analysis (Q, ksi) Steady-State Condition, -40°F Ambient Temperature and Maximum Decay Heat**

The stresses resulting from lead shrinkage are added to those generated by the thermal loading conditions. Boundary and loading conditions in these analyses are applied as previously described in Paragraph 2.6.1.3.1.

The stresses on the inner shell of the cask resulting from lead shrinkage are presented in Paragraph 2.6.1.3.3. As shown in that section, a hoop stress of -2,658 psi and an axial stress of -3,709 psi can develop in the inner shell when cooled to -40°F. This case is independent of other load cases and, therefore, will not limit the cask design. For the -20°F case, the hoop stress is -2,548 psi and the axial stress is -3,950 psi. These stresses are determined by conservatively neglecting creep effects on the lead.

### 2.6.3 Reduced External Pressure

Since the increased heat loading of the contents has no effect on the condition of reduced external pressure loading of 3.25 psia, and since this condition has been analyzed and presented in Reference [2.2], only the results are presented here in Figure 2.12.

### 2.6.4 Increased External Pressure

Since the increased heat loading of the contents has no effect on the condition of increased external pressure loading, and since this condition has been analyzed and presented in Reference [2.2], only the results are presented here in Figure 2.13.

### 2.6.5 Vibration

The evaluation of the Model 2000 package for the effect of vibration loading has been analyzed and presented in Subsection 2.6.5 of Reference [2.2], and repeated here in Figure 2.14. With the known stress field due to vibration, thermal stresses from 2000 watt heat loading are superimposed to the vibration stresses. The resulting stresses are compared with the allowable stresses as shown in Subsection 2.6.10 of this report.

The Model 2000 transport package is designed to be primarily transported by truck. The effects of shock and vibration loads associated with this mode of transportation on the Model 2000 are negligible as determined in this section. The maximum stress intensity range ($P_m + P_b + Q$) identified in Table 2.8 is 22.4 ksi at stress point 7. Since the thermal cycling stresses vary at much longer period (~$10^6$ times), the thermal stresses can be treated as a mean stress with vibrational stresses as the stress amplitude, $S_a$. The stress amplitude $S_a$ may be calculated with a stress concentration factor of 4 being applied as

$$S_a = \frac{28.3\times10^6}{27.0\times10^6}(4)(1.15) = 2.1\,\text{ksi}$$

This value of $S_a$ indicates an allowable life of greater than $10^{11}$ cycles. A detailed analysis is done in Appendix 2.11.1.

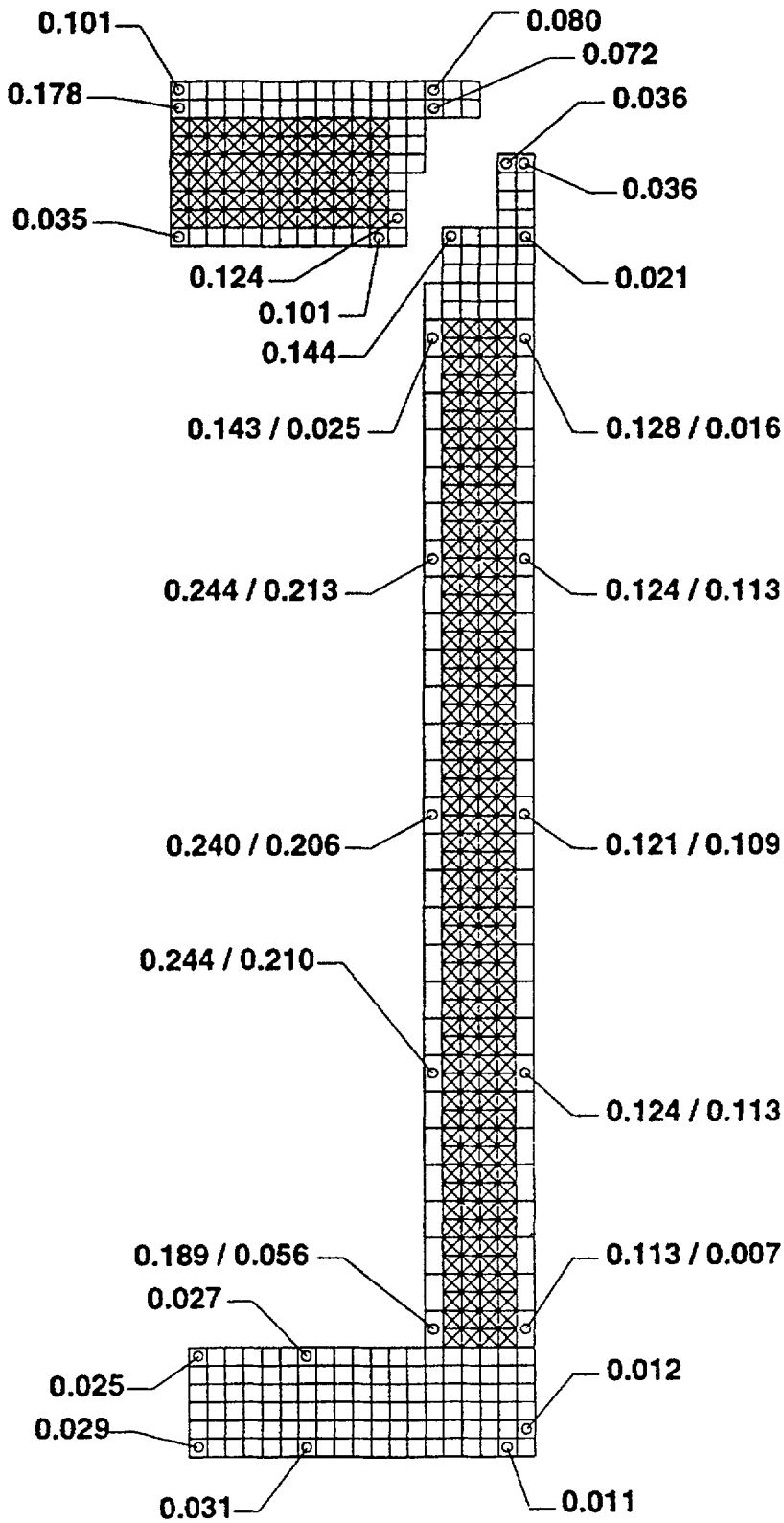


**Figure 2.12.* Stress Intensity ($P_m + P_b$, ksi); Reduced External Pressure, 30 psia**

*Refer to reference [2.2], Figure 2.6.3.1

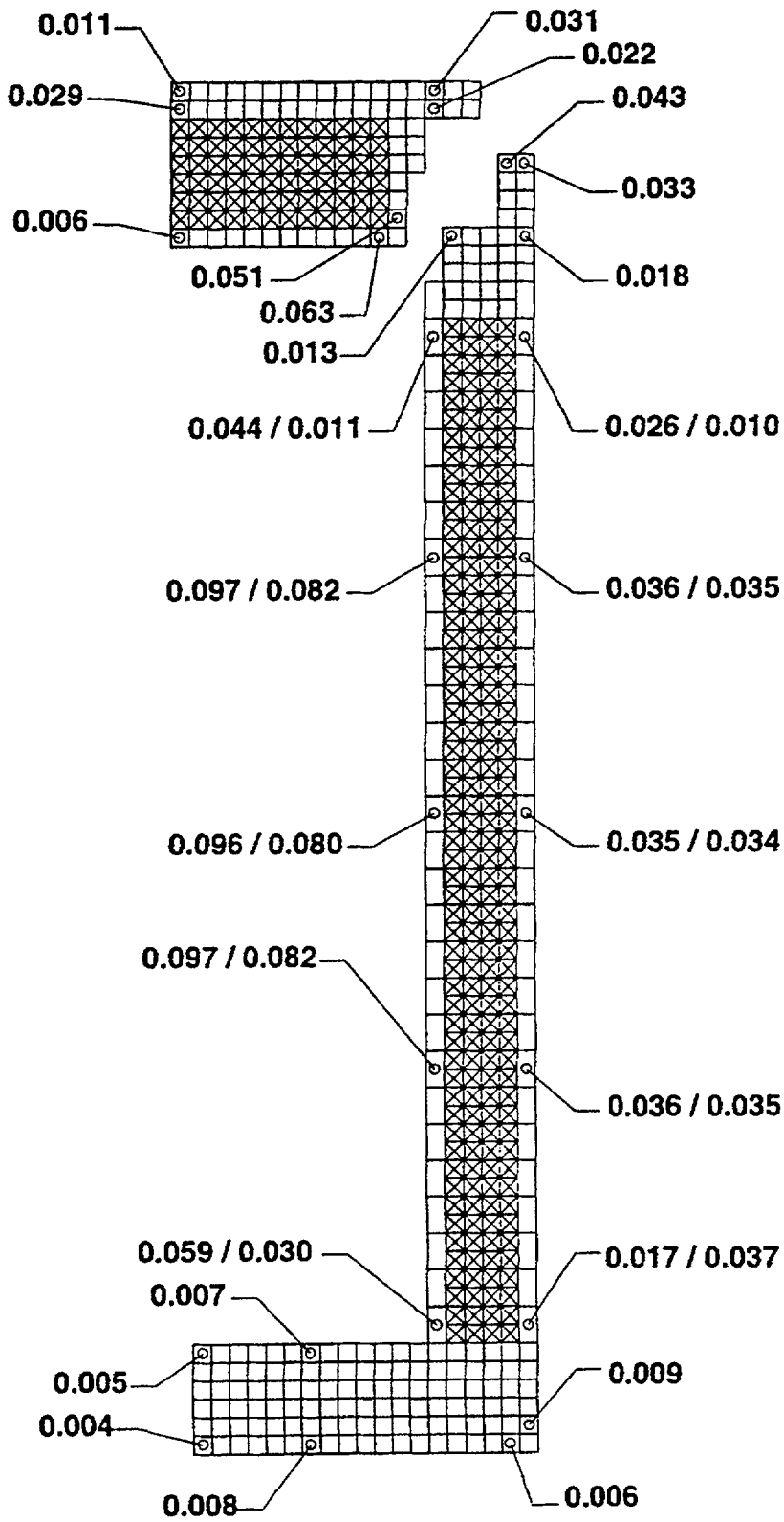


**Figure 2.13.* Stress Intensity ($P_m + P_b$, ksi); Increased External Pressure**

*Refer to reference [2.2], Figure 2.6.4.1

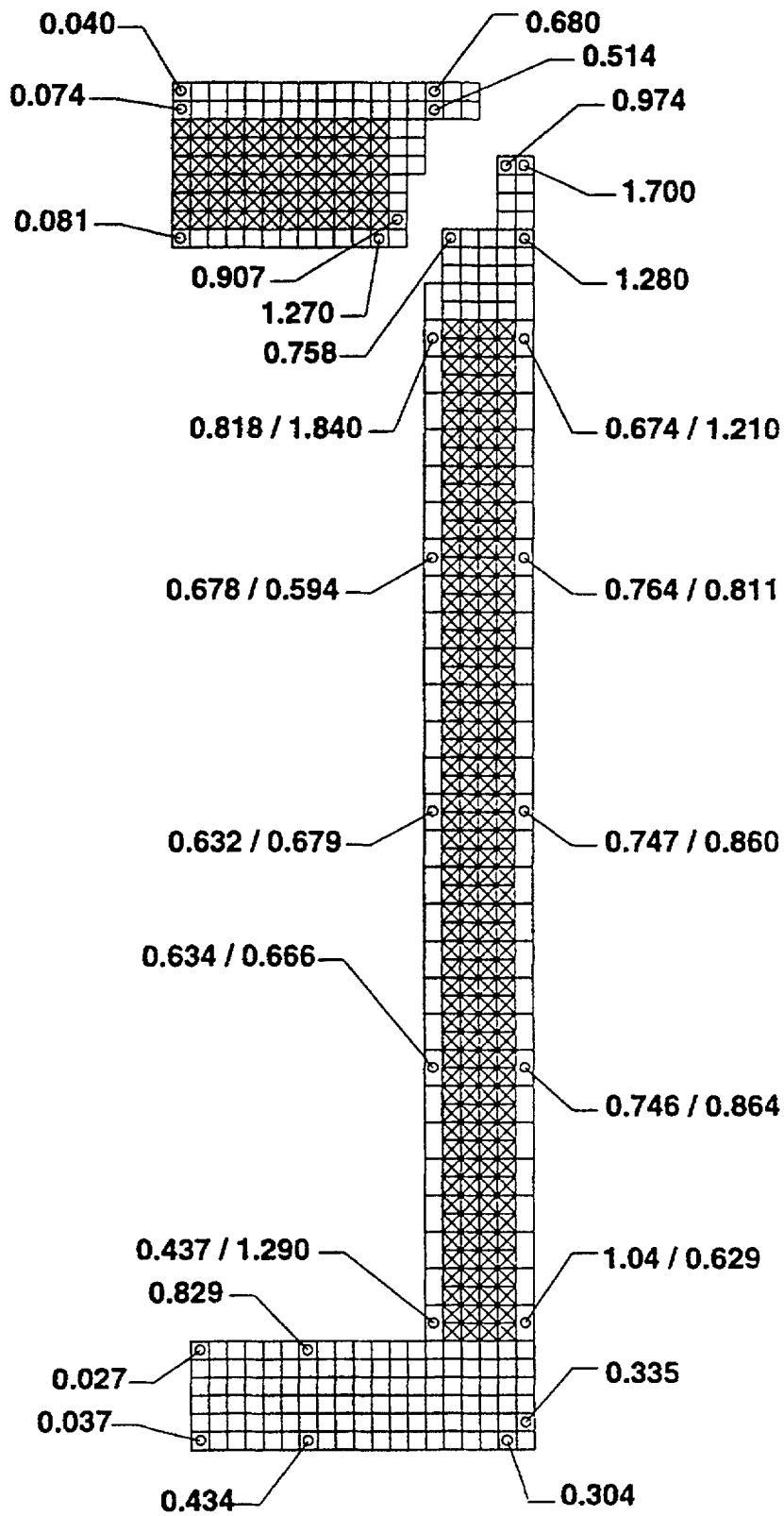


**Figure 2.14.* Stress Intensity ($P_m + P_b$, ksi); Combined Vibration**

*Refer to reference [2.2], Figure 2.6.5.5

### 2.6.6 Water Spray

The containment capabilities of the Model 2000 transport package are not compromised by water spray since all external surfaces are of stainless steel, and the closure seal is impervious to water.

### 2.6.7 Free Drop

The evaluation of the Model 2000 package for the effect of a one-foot drop is presented in Subsection 2.6.7 and Appendix 2.10.8 of Reference [2.2]. Some data and results are summarized as follows: Also the stress plot are shown in Figures 2.15 and 2.16.

The g's force produced by the one-foot drop for each drop configuration for a toroid with a wall thickness of 0.76 in. are:

| | |
|---|---|
| Head-on | 69 g's |
| Side | 20 g's |
| CG-over-corner | 14 g's |

These values are obtained by identifying the load for which the integral of load displacement function is equal to the energy generated by the drop.

In the cask analysis the value of the head-on drop, 69 g's is applied for both head-on and side drop evaluation. The CG-over-corner and oblique angle are omitted because they produce lesser effects. This conclusion is drawn from the information presented in Subsections 2.10.6 and 2.10.7, Reference [2.2]. Also, the evaluation for a toroid with a wall thickness of 0.50 in. is omitted because its collapse produces a g' force which is less than the one produced by the 0.76 in. wall toroid.

Head-On Evaluation

External Force

$$F_o = 23{,}350(69) = 1{,}161{,}150 \text{ lbs.}$$

Internal Force Due to Contents

$$F_i = 5{,}450(69) = 376{,}050 \text{ lbs.}$$

With the known stress field due to one foot drop from Reference [2.2], (Figures 2.15 and 2.16) thermal stresses from 2000 watt heat loading are superimposed to these stresses. The stress intensity values resulting from head on drop and side drop are compared with the allowable stresses as shown in Subsection 2.6.10 of this report.

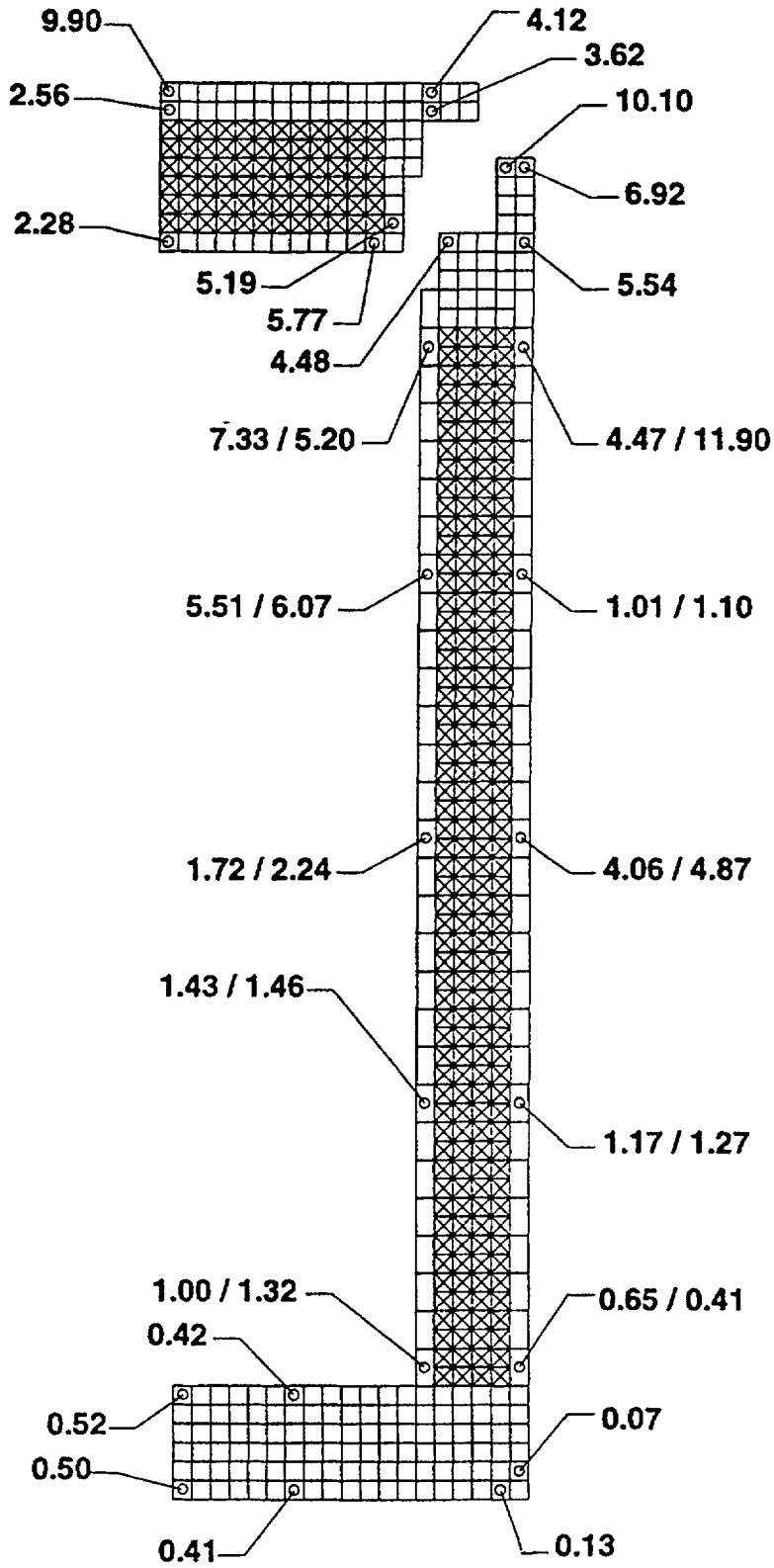


**Figure 2.15.* Stress Intensity ($P_m + P_b$, ksi); 1-ft. Free Drop, Head-On Orientation**

*Refer to reference [2.2], Figure 2.6.7.1

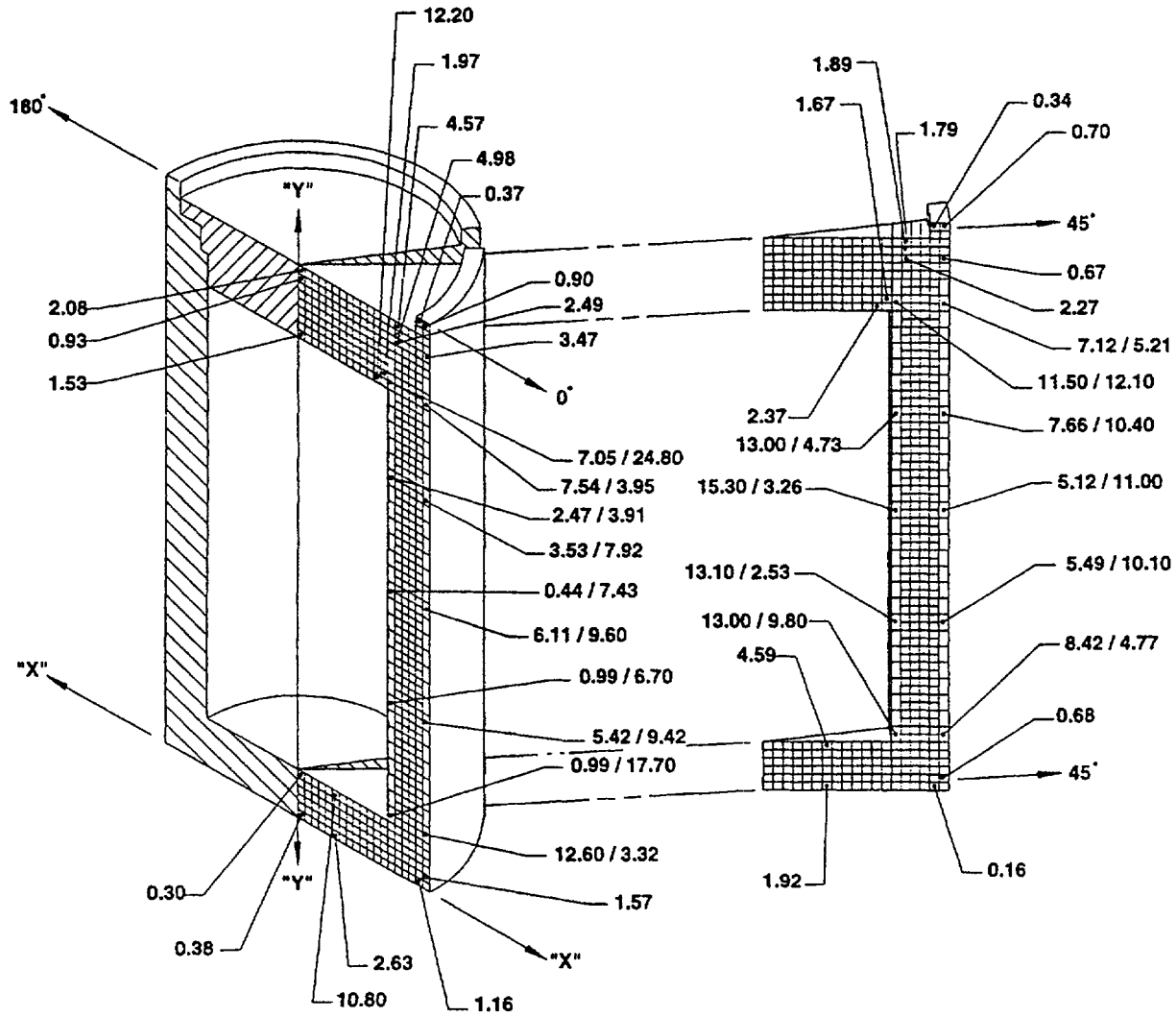


**Figure 2.16.* Stress Intensity ($P_m + P_b$, ksi); 1-ft. Free Drop, Side Orientation**

*Refer to reference [2.2], Figure 2.6.7.2

### 2.6.8 Compression

This test does not apply to the Model 2000 Transport Package, since the package weight is in excess of 5,000 kg (11,000 lbs).

### 2.6.9 Penetration

Since the increased contents heat loading does not affect the penetration strength of the Model 2000 package, and since the result has been presented in Reference [2.2], it is not addressed herein.

### 2.6.10 Summary of Results.

In this section, the resulting stresses from analyses for the normal conditions of transport are combined following the guidelines of Regulatory Guide 7.8, Reference [2.8]. A summary of the maximum stress for each condition is presented in Table 2.8. A review of these data confirmed that the effects of normal conditions of transport on the Model 2000 cask with a content heat load of 2000 watts are shown to be well within the allowable values.

For certain element types, namely, four-node quadrilateral elements, the $P_m + P_b$ stress intensity value is reported for $P_m$ in Table 2.8. This is done because for these elements the finite element solution renders the combined and not separated primary membrane ($P_m$) and primary bending ($P_b$) stresses. In the finite element solution for these elements, the resultant principal stresses are for the combined $P_m$ and $P_b$. Therefore, the implied safety margin s for these reported $P_m$ stresses are conservative since they are compared to the allowables for $P_m$ alone. In addition to the summary of the maximum stresses presented in Table 2.8, a detailed stress results at various points throughout the model at each loading condition are given in Appendix 2.11.3

Also comparison of the maximum stresses between the case with 600 watts contents heat as presented in Reference [2.2] and the case with 2000 watts contents heat are tabulated in Table 2.9. Since the thermal stresses are the only different stresses, Q column and $P_m + P_b + Q$ column are updated and compared.

**Table 2.8. Summary of Stresses, Normal Condition of Transport**

| Loading Condition | Max. Stress Location (2) | | Temp. (°F) | Stress Intensity Category and Criteria (ksi) | | | | | | |
|---|---|---|---|---|---|---|---|---|---|---|
| | | | | Q(3) | $P_m < S_m$ | | $P_m + P_b < 1.5\ S_m$ | | $P_m + P_b + Q < 3.0\ S_m$ | |
| Hot Environment @ 100°F + Decay Heat | Inner Shell and BTM Forging Joint | 7a | 318 | 21.9 | 0.1 | 20.0 | 0.1 | 30.0 | 22.0 | 60.0 |
| Cold Environment @ -40°F + Decay Heat | Inner Shell and BTM Forging Joint | 7a | 201 | 15.1 | 0.1 | 20.0 | 0.1 | 30.0 | 15.2 | 60.0 |
| Cold Environment @ -40°F | Inner Shell and BTM Forging Joint | 7a | -40 | 13.9 | 0.1 | 20.0 | 0.1 | 30.0 | 14.0 | 60.0 |
| Min. Ext. Pressure @ 100°F + Decay Heat | Inner Shell and BTM Forging Joint | 7a | 318 | 21.9 | 0.1 | 20.0 | 0.2 | 30.0 | 22.1 | 60.0 |
| Min. Ext. Pressure @ -20°F + Decay Heat | Inner Shell and BTM Forging Joint | 7a | 213 | 16.6 | 0.1 | 20.0 | 0.2 | 30.0 | 16.8 | 60.0 |
| Increase Pressure @ 100°F + Decay Heat | Inner Shell and BTM Forging Joint | 7a | 318 | 21.9 | 0.1 | 20.0 | 0.1 | 30.0 | 21.9 | 60.0 |
| Increase Pressure @ -20°F | Inner Shell and BTM Forging Joint | 7a | -20 | 21.1 | 0.1 | 20.0 | 0.1 | 30.0 | 12.2 | 60.0 |
| Increase Pressure @ -20°F + Decay Heat | Inner Shell and BTM Forging Joint | 7a | 213 | 16.6 | 0.1 | 20.0 | 0.1 | 30.0 | 16.6 | 60.0 |
| Vibration and Shock @ 100°F + Decay Heat | Inner Shell and BTM Forging Joint | 7a | 318 | 21.9 | 0.7 | 20.0 | 0.5 | 30.0 | 22.4 | 60.0 |
| Vibration and Shock @ -20°F + Decay Heat | Inner Shell and BTM Forging Joint | 7a | 213 | 16.6 | 0.7 | 20.0 | 0.5 | 30.0 | 17.1 | 60.0 |
| Vibration and Shock @ -20°F | Inner Shell and BTM Forging Joint | 7a | -20 | 12.1 | 0.7 | 20.0 | 0.5 | 30.0 | 12.6 | 60.0 |
| Free Drop (Top) (4) @ 100°F + Decay Heat | Inner Shell and (5) BTM Forging Joint | 7a | 318 | 21.9 | 1.2 | 20.0 | 1.1 | 30.0 | 23.0 | 60.0 |
| | Outer Shell and (6) Forging Joint | 16b | 316 | 2.59 | 6.9 | 20.0 | 11.9 | 30.0 | 14.5 | 60.0 |
| Free Drop (Top) (4) @ -20°F + Decay Heat | Inner Shell and (5) BTM Forging Joint | 7a | 215 | 16.6 | 1.2 | 20.0 | 1.1 | 30.0 | 17.7 | 60.0 |
| | Outer Shell and (6) Forging Joint | 16b | 202 | 1.34 | 6.9 | 20.0 | 11.9 | 30.0 | 13.2 | 60.0 |
| Free Drop (Top) (4) @ -20°F | Outer Shell and Forging Joint | 16b | -20 | 1.43 | 6.9 | 20.0 | 11.9 | 30.0 | 13.3 | 60.0 |
| Free Drop (Sd 0°M) (4) @ 100°F + Decay Heat | Inner Shell and Top Forging Joint | 15b | 324 | 3.27 | 13.3 | 20.0 | 24.8 | 30.0 | 28.1 | 60.0 |
| Free Drop (Sd 0°M) (4) @ -20°F + Decay Heat | Inner Shell and Top Forging Joint | 15b | 211 | 9.33 | 13.3 | 20.0 | 24.8 | 30.0 | 34.1 | 60.0 |
| Free Drop (Sd 5°M) (4) @ -20°F | Inner Shell and Top Forging Joint | 15b | -20 | 4.89 | 13.3 | 20.0 | 24.8 | 30.0 | 29.7 | 60.0 |

NOTES:

1. Stresses for non-shell elements are given in the LIBRA program at the centroid of the element membrane, and bending effects are combined in these values. Therefore, the same stress value is compared against both criteria, $P_m + P_b$.
2. Refer to Figure 2.6 for locations
3. Pre-fabrication stresses are included in the inner shell stresses.
4. Toiroid with 0.76 in. thick wall.
5. Maximum stresses for $P_m + P_b + Q$.
6. Maximum stresses for $P_m + P_b$.

## Table 2.9. Comparison of Maximum Stresses, 600W and 2000W Contents Heat Normal Conditions of Transport

| Loading Condition | Max. Stress Location | | STRESSES (KSI) | | | | | | | | |
|---|---|---|---|---|---|---|---|---|---|---|---|
| | | | $P_m$ | Sm | $P_m + P_b$ | 1.5 Sm | Q | | $P_m + P_b + Q$ | | 3.0 Sm |
| | | | | | | | 2000W | 600W | 2000W | 600W | |
| Hot Environment @100°F + Decay Heat | Inner Shell and BTM Forging Joint | 7a | 0.1 | 20 | 0.1 | 30 | 21.9 | 12.1 | 22.0 | 12.2 | 60 |
| Cold Environment @ -40°F + Decay Heat | Inner Shell and BTM Forging Joint | 7a | 0.1 | 20 | 0.1 | 30 | 15.1 | 8.7 | 15.2 | 8.8 | 60 |
| Cold Environment @ -40°F | Inner Shell and BTM Forging Joint | 7a | 0.1 | 20 | 0.1 | 30 | 13.9 | 13.9 | 14.0 | 14.0 | 60 |
| Min. Ext. Pressure @ 100°F + Decay Heat | Inner Shell and BTM Forging Joint | 7a | 0.1 | 20 | 0.2 | 30 | 21.9 | 12.1 | 22.1 | 12.3 | 60 |
| Min. Ext. Pressure @ -20°F + Decay Heat | Inner Shell and BTM Forging Joint | 7a | 0.1 | 20 | 0.2 | 30 | 16.6 | 7.2 | 16.8 | 7.4 | 60 |
| Increase Pressure @ 100°F + Decay Heat | Inner Shell and BTM Forging Joint | 7a | 0.1 | 20 | 0.1 | 30 | 21.9 | 12.1 | 21.9 | 12.2 | 60 |
| Increase Pressure @ -20°F + Decay Heat | Inner Shell and BTM Forging Joint | 7a | 0.1 | 20 | 0.1 | 30 | 16.6 | 7.2 | 16.6 | 7.3 | 60 |
| Vibration and Shock @ 100°F + Decay Heat | Inner Shell and BTM Forging Joint | 7a | 0.7 | 20 | 0.5 | 30 | 21.9 | 12.1 | 22.4 | 12.7 | 60 |
| Vibration and Shock @ -20°F + Decay Heat | Inner Shell and BTM Forging Joint | 7a | 0.7 | 20 | 0.5 | 30 | 16.6 | 7.2 | 17.1 | 7.8 | 60 |
| Vibration and Shock @ -20°F | Inner Shell and BTM Forging Joint | 7a | 0.7 | 20 | 0.5 | 30 | 12.1 | 12.1 | 12.6 | 12.6 | 60 |
| Free Drop (Top) @ 100°F + Decay Heat | Inner Shell and BTM Forging Joint | 7a | 1.2 | 20 | 1.1 | 30 | 21.9 | 12.1 | 23.0 | 13.2 | 60 |
| | Outer Shell and Forging Joint | 16b | 6.9 | 20 | 11.9 | 30 | 2.59 | 2.76 | 14.5 | 14.7 | 60 |
| Free Drop (Top) @ -20°F + Decay Heat | Inner Shell and BTM Forging Joint | 7a | 1.2 | 20 | 1.1 | 30 | 16.6 | 12.1 | 17.7 | 13.2 | 60 |
| | Outer Shell and Forging Joint | 16b | 6.9 | 20 | 11.9 | 30 | 1.34 | 0.88 | 13.2 | 12.8 | 60 |
| Free Drop (Top) @ -20°F | Outer Shell and Forging Joint | 16b | 6.9 | 20 | 11.9 | 30 | 1.43 | 1.43 | 13.3 | 13.3 | 60 |
| Free Drop (Sd 0°M) @ 100°F + Decay Heat | Inner Shell and Top Forging Joint | 15a | 13.3 | 20 | 24.8 | 30 | 3.27 | 3.34 | 28.1 | 28.1 | 60 |
| Free Drop (Sd 0°M) @ -20°F + Decay Heat | Inner Shell and Top Forging Joint | 15a | 13.3 | 20 | 24.8 | 30 | 9.33 | 4.35 | 34.1 | 29.1 | 60 |
| Free Drop (Sd 0°M) @ -20°F | Inner Shell and Top Forging Joint | 15a | 13.3 | 20 | 24.8 | 30 | 4.89 | 4.89 | 29.7 | 29.7 | 60 |

As an example, the stresses for vibration and shock conditions for 100°F and -20°F ambient may be broken down as follows: the stress intensity values are in ksi units.

| Location | Thermal Stress | Mechanical Pressure | Vibration and Shock | Combined Stress |
|---|---|---|---|---|
| Inner shell and BTM forging joint @ 100°F condition | 21.9 | 0.10 | 0.44 | 22.44 |
| Inner shell and BTM forging joint @ -20°F + decay heat | 16.6 | 0.10 | 0.44 | 17.14 |

The stress intensity values ($P_m$ + $P_b$ + Q, ksi) throughout the cask resulting from normal conditions of transport are presented in Figure 2.17 through 2.32.

### 2.6.11 Buckling

The buckling evaluation of the Model 2000 cask for the normal conditions of transport (toroid with 0.50 and 0.76 inch wall) is performed for the one-foot free drop condition only. All other conditions produce smaller stresses throughout the outer and inner shells of the cask.

The outer shell worst conditions are for axial compression, the head-on orientation, free drop at 100°F ambient temperature; and for bending, the side orientation under the same environment. In the case of the inner shell, the maximum axial compression is produced also by the head-on orientation free drop combined with the pressure loading produced by shrinkage of the lead at -20°F ambient temperature. This environment, but with the cask dropping sideways, produces the maximum bending.

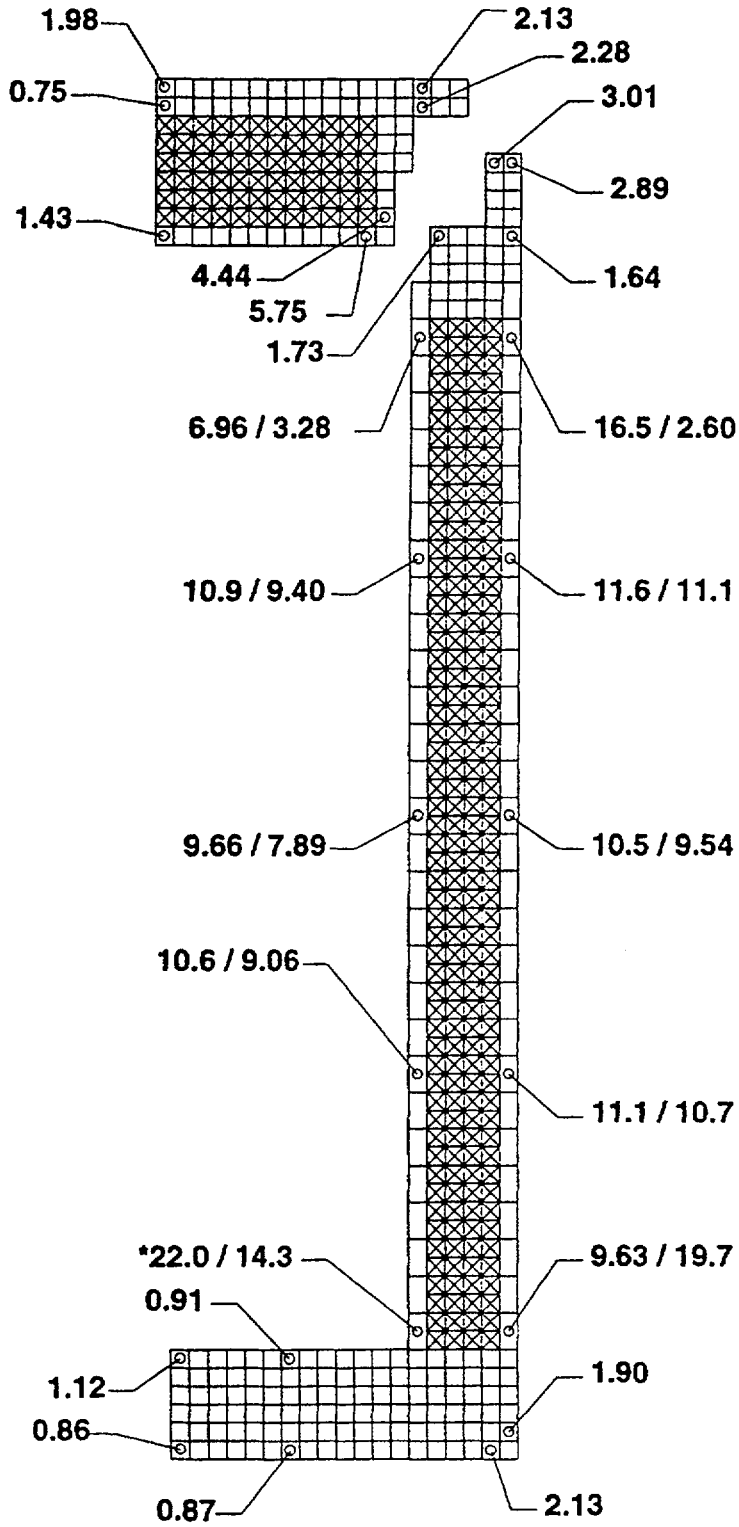


*Max Stress Location

**Figure 2.17. Stress Intensity ($P_m + P_b + Q$, ksi) – Hot Environment @ 100°F Plus Decay Heat**

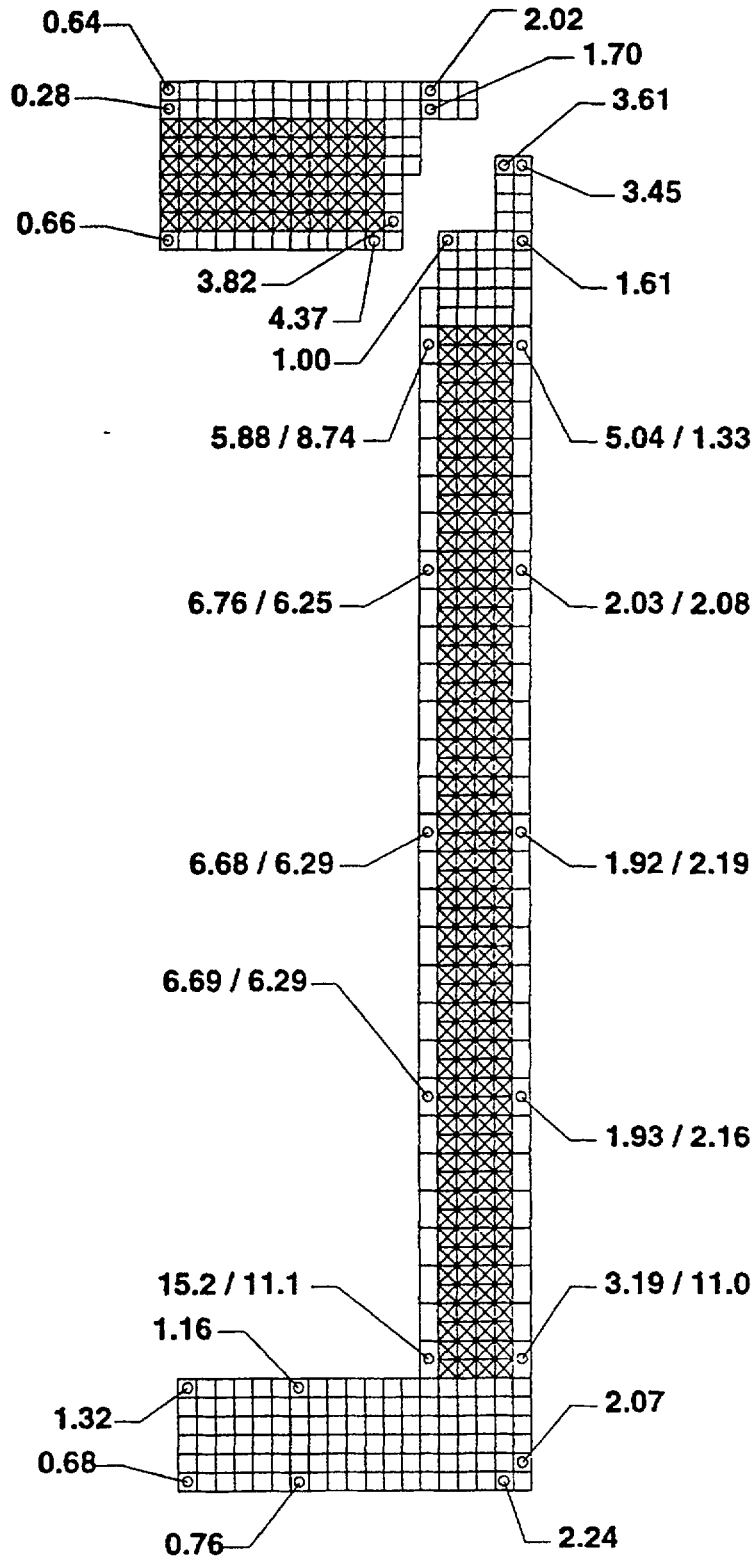


*Max Stress Location

**Figure 2.18. Stress Intensity ($P_m + P_b + Q$, ksi) – Cold Environment @ -40°F Plus Decay Heat**

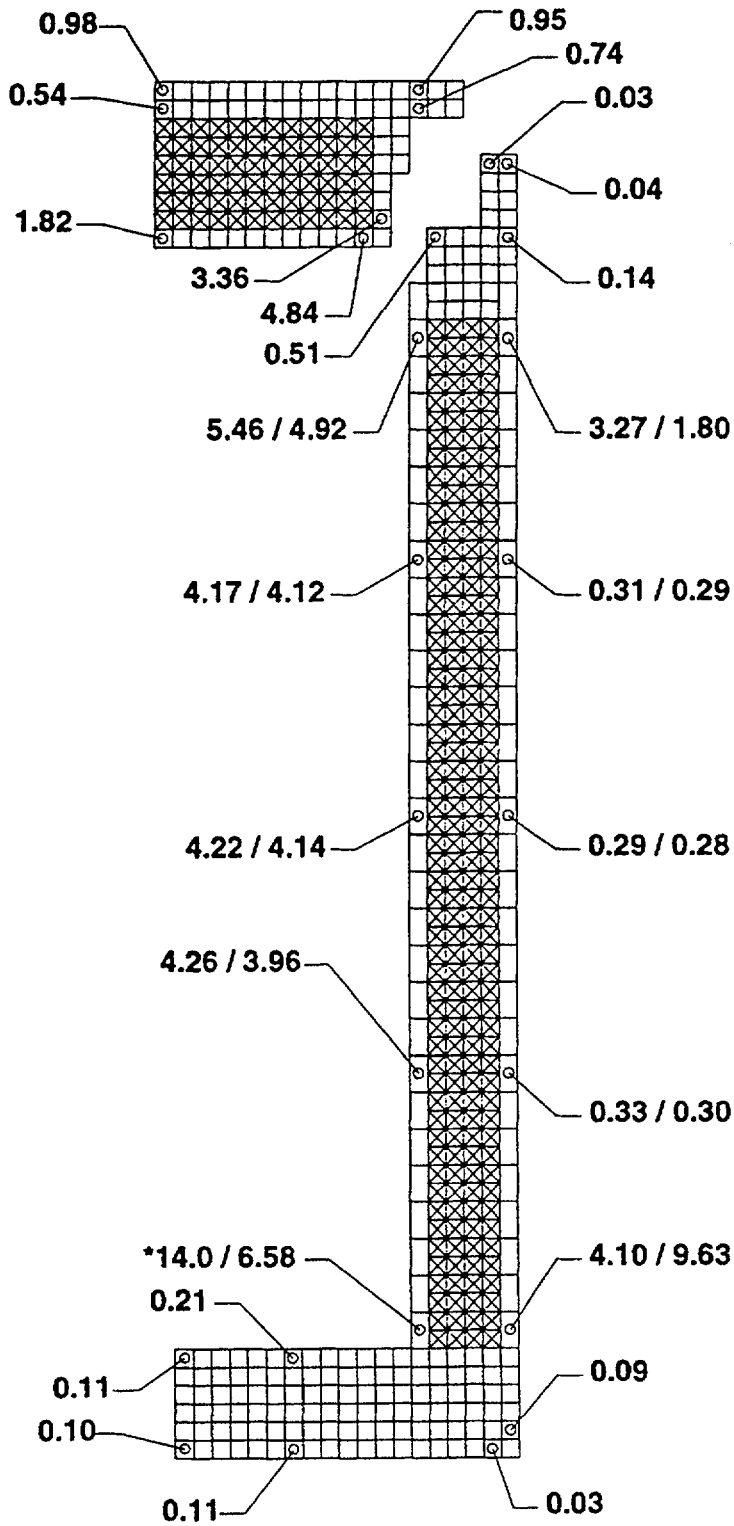


*Max Stress Location

**Figure 2.19. Stress Intensity ($P_m + P_b + Q$, ksi) – Cold Environment @ -40°F Without Decay Heat**

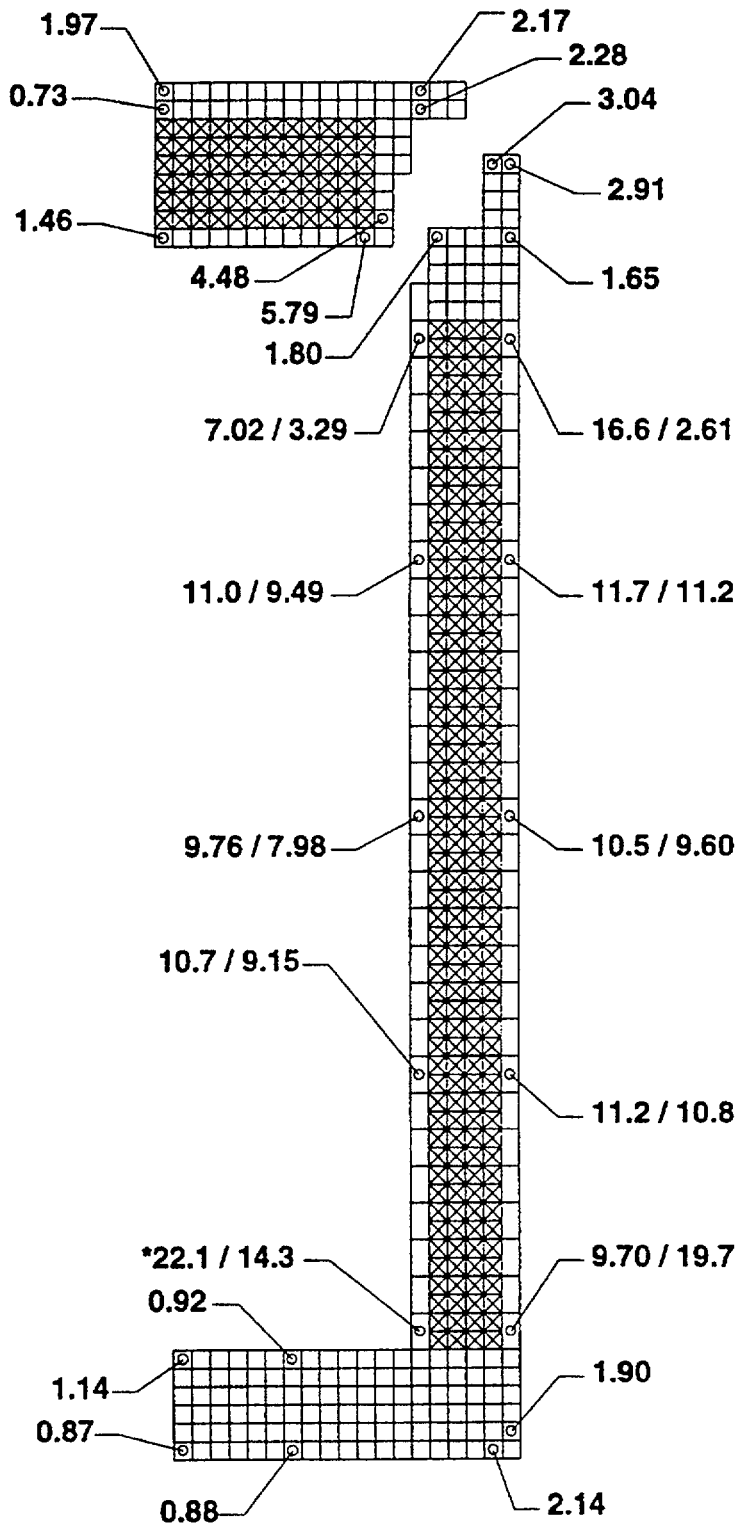


*Max Stress Location

**Figure 2.20. Stress Intensity ($P_m + P_b + Q$, ksi) – Minimum External Pressure @ 100°F Plus Decay Heat**

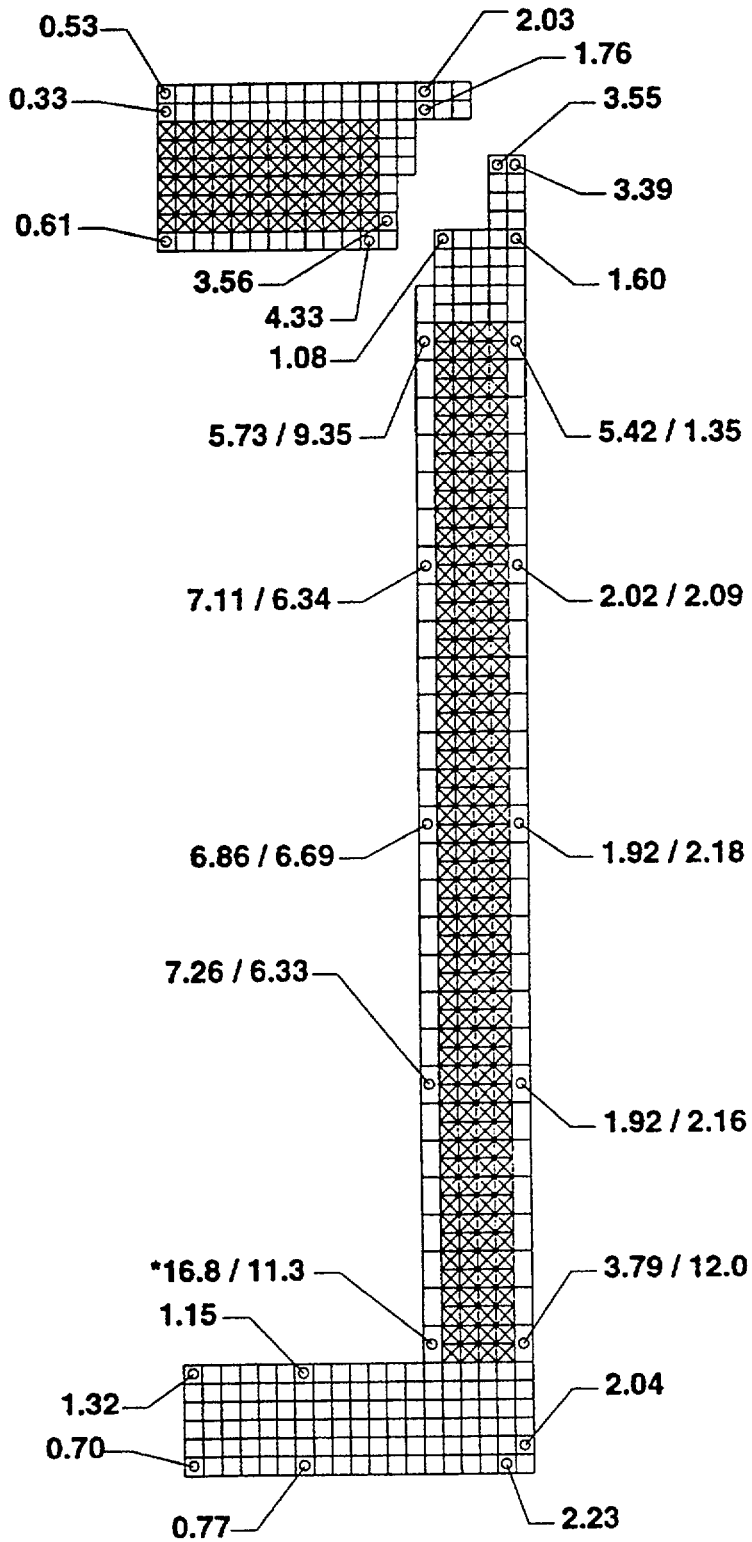


*Max Stress Location

**Figure 2.21. Stress Intensity ($P_m + P_b + Q$, ksi) – Minimum External Pressure @ -20°F Plus Decay Heat**

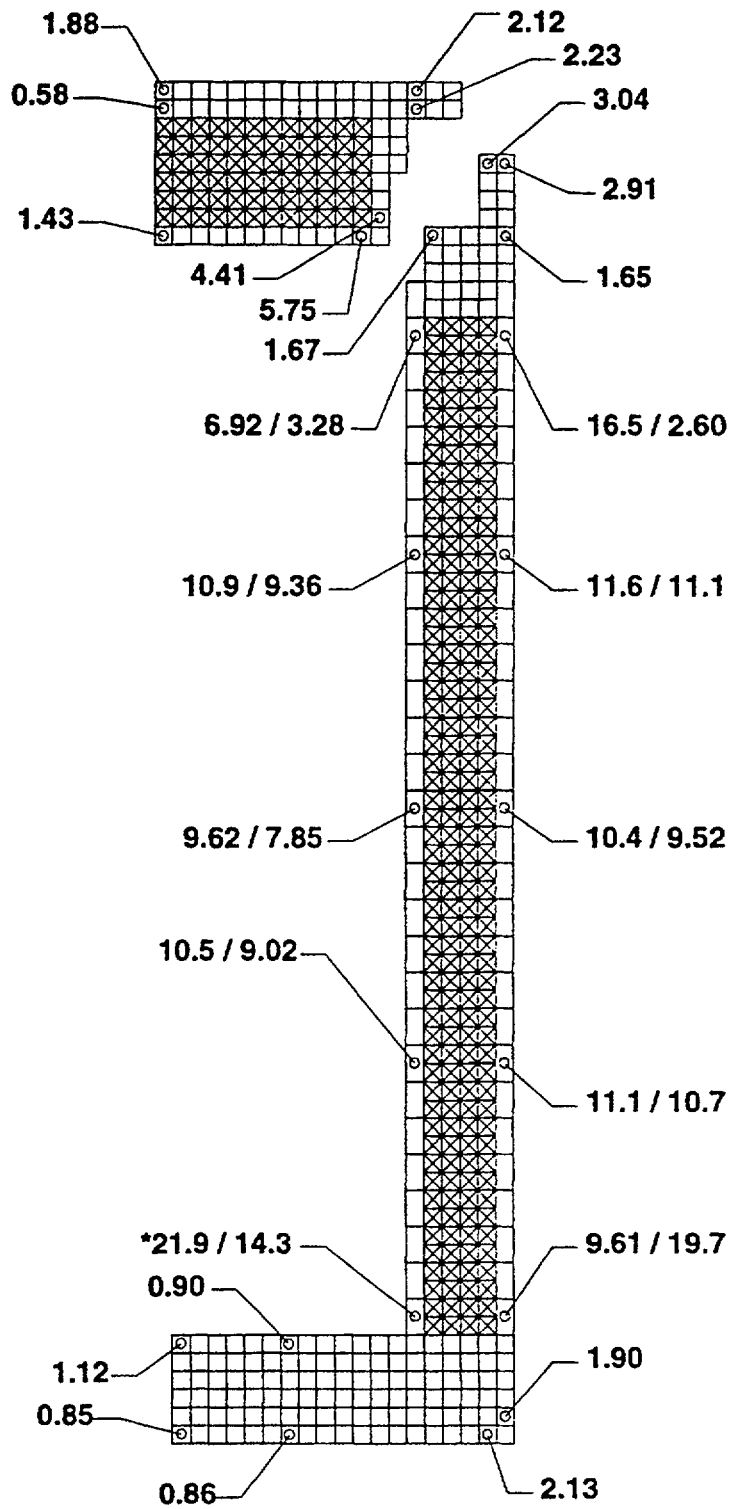


*Max Stress Location

**Figure 2.22. Stress Intensity ($P_m + P_b + Q$, ksi) – Increased Pressure @ 100°F**

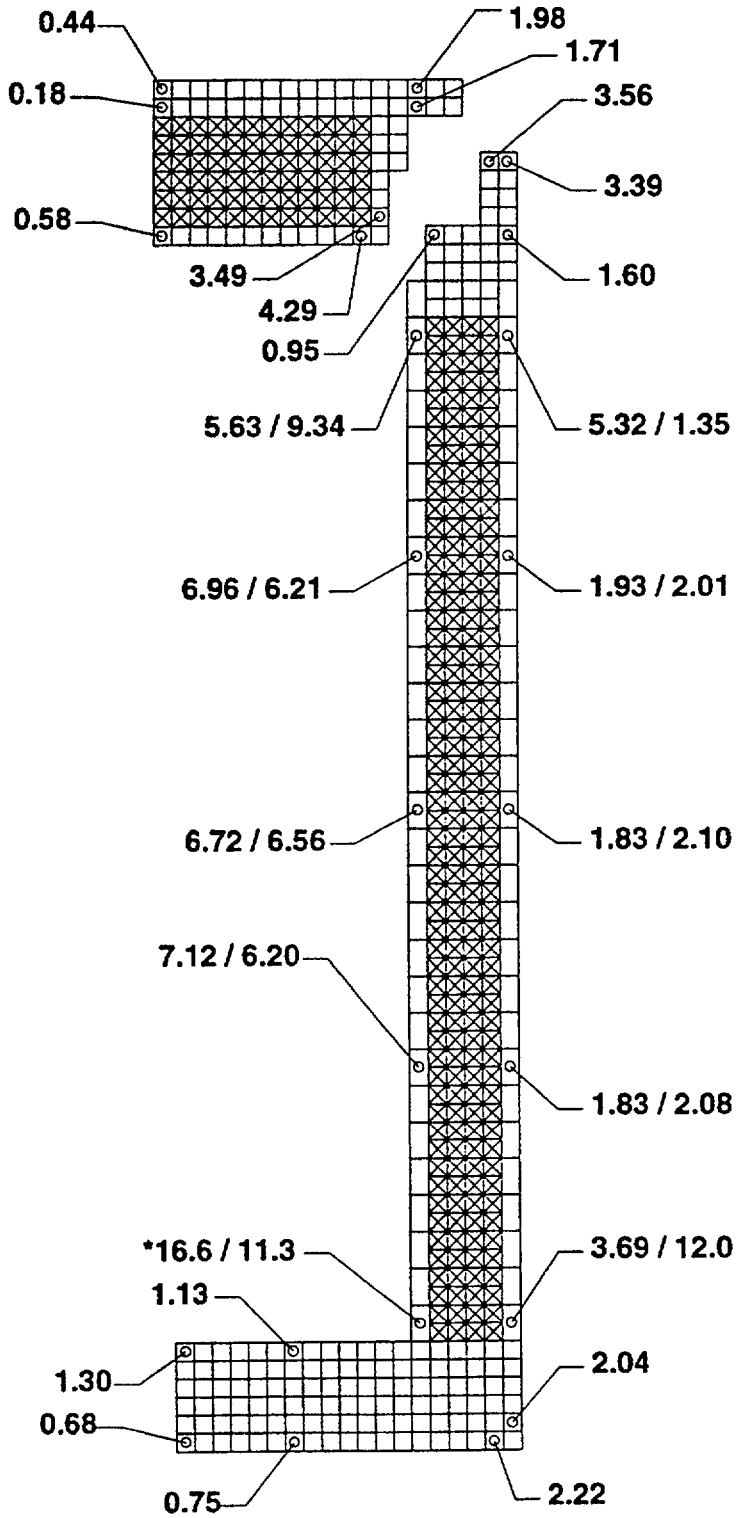


*Max Stress Location

**Figure 2.23. Stress Intensity ($P_m + P_b + Q$, ksi) – Increased Pressure @ -20°F Plus Decay Heat**

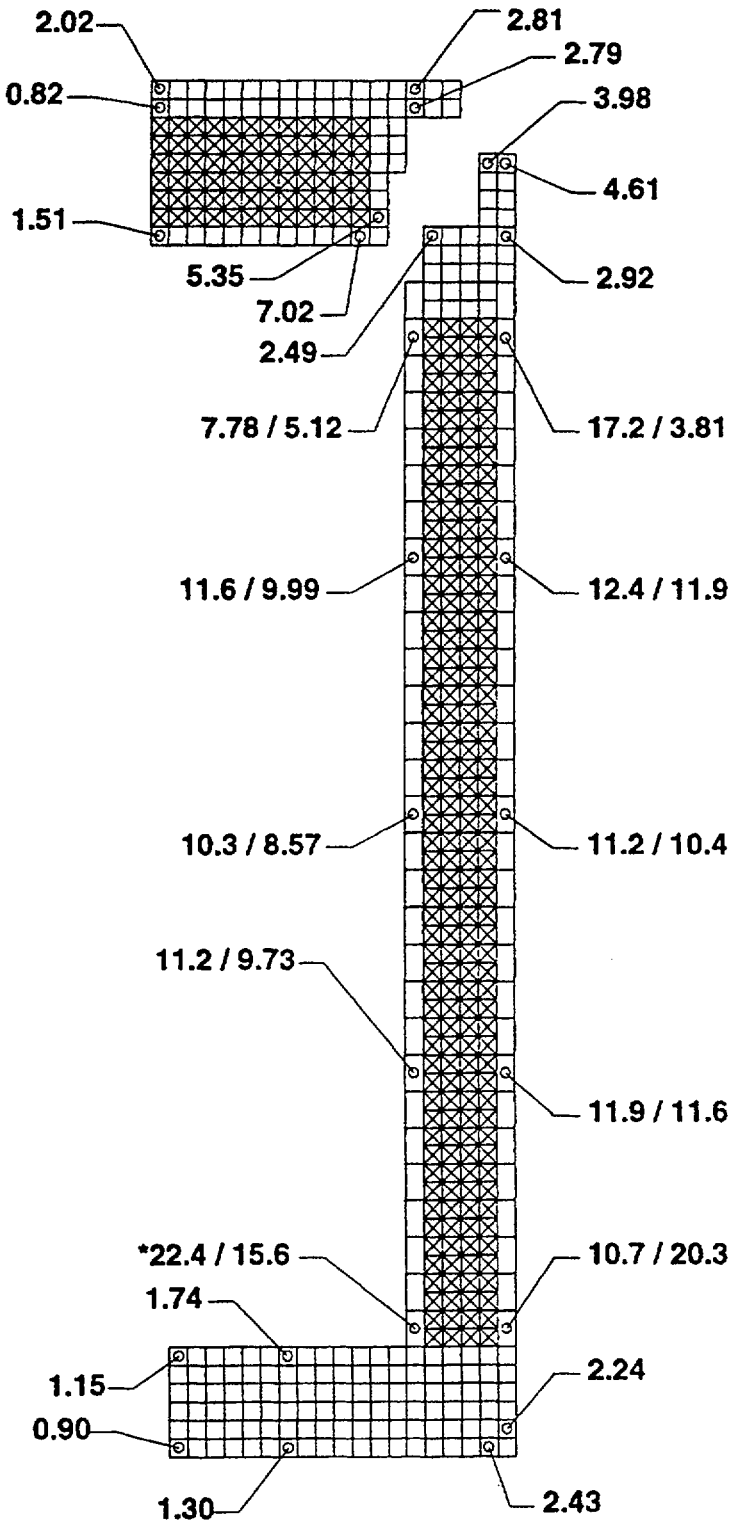


*Max Stress Location

**Figure 2.24. Stress Intensity ($P_m + P_b + Q$, ksi) – Vibration With Maximum Decay Heat @ 100°F**

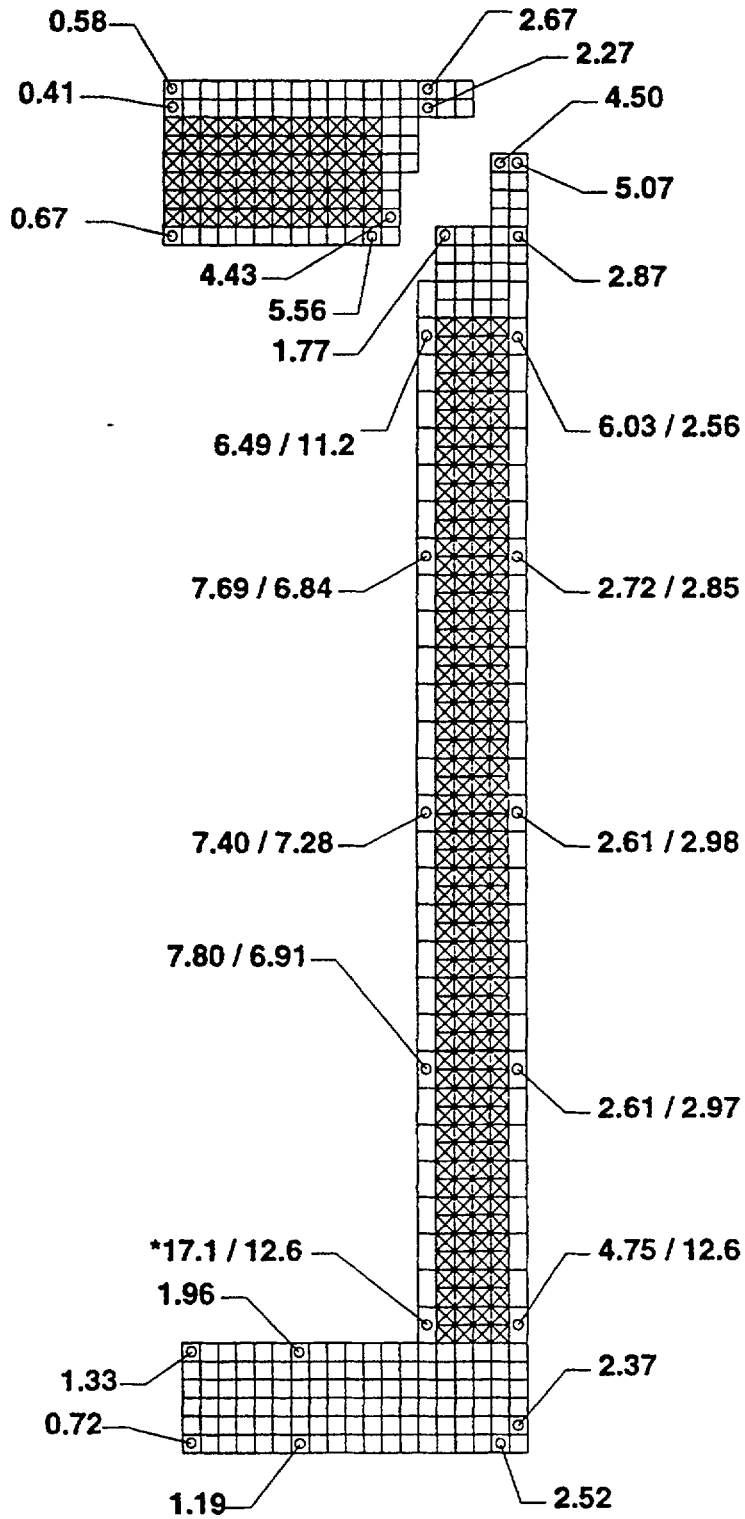


*Max Stress Location

**Figure 2.25. Stress Intensity ($P_m + P_b + Q$, ksi) – Vibration With Maximum Decay Heat @ -20°F**

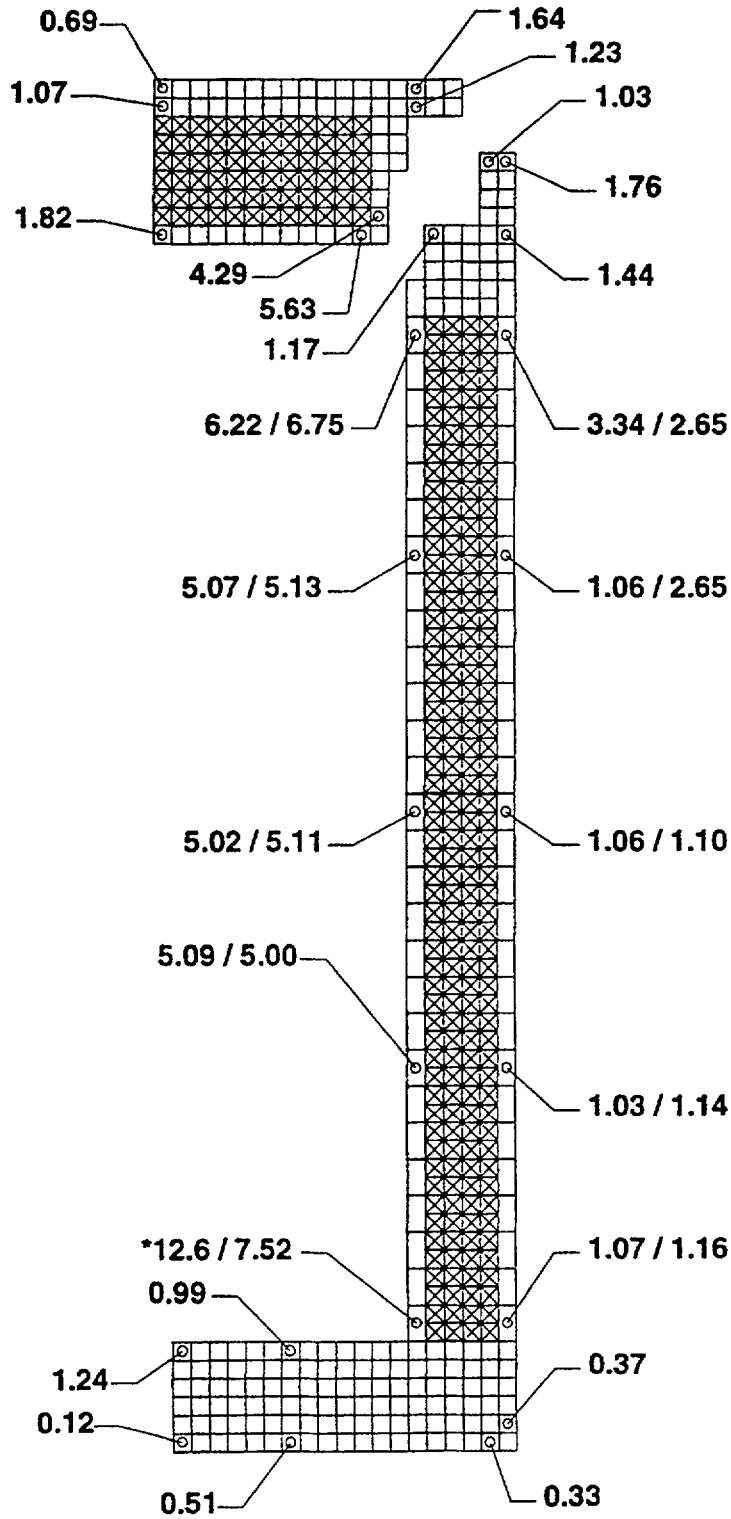


*Max Stress Location

**Figure 2.26. Stress Intensity ($P_m + P_b + Q$, ksi) – Vibration Without Decay Heat @ -20°F**

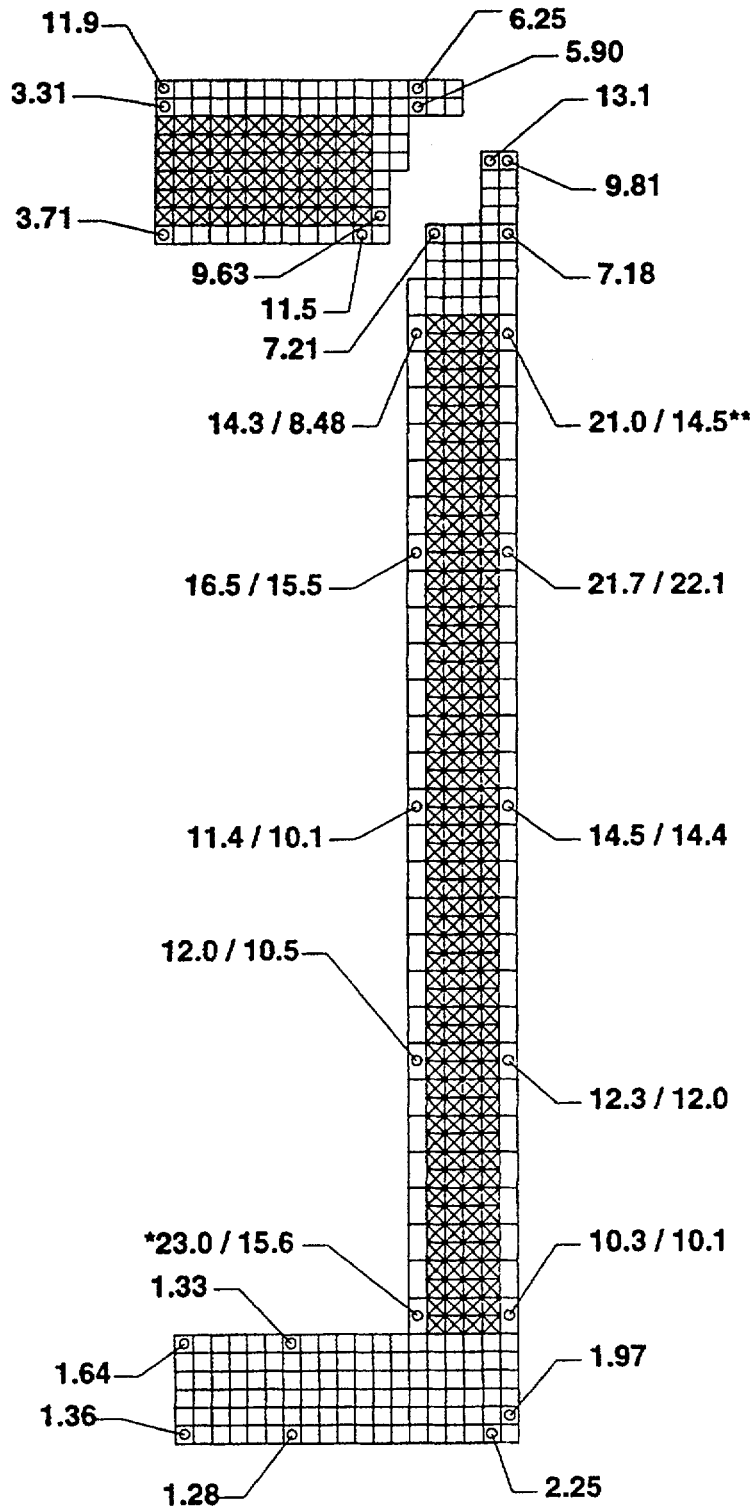


*Max Stress Location
**Max Stress Location for Pm+Pb

**Figure 2.27. Stress Intensity ($P_m + P_b + Q$, ksi) – Free Drop, Head-On Orientation 100°F Ambient Temperature Plus Decay Heat**

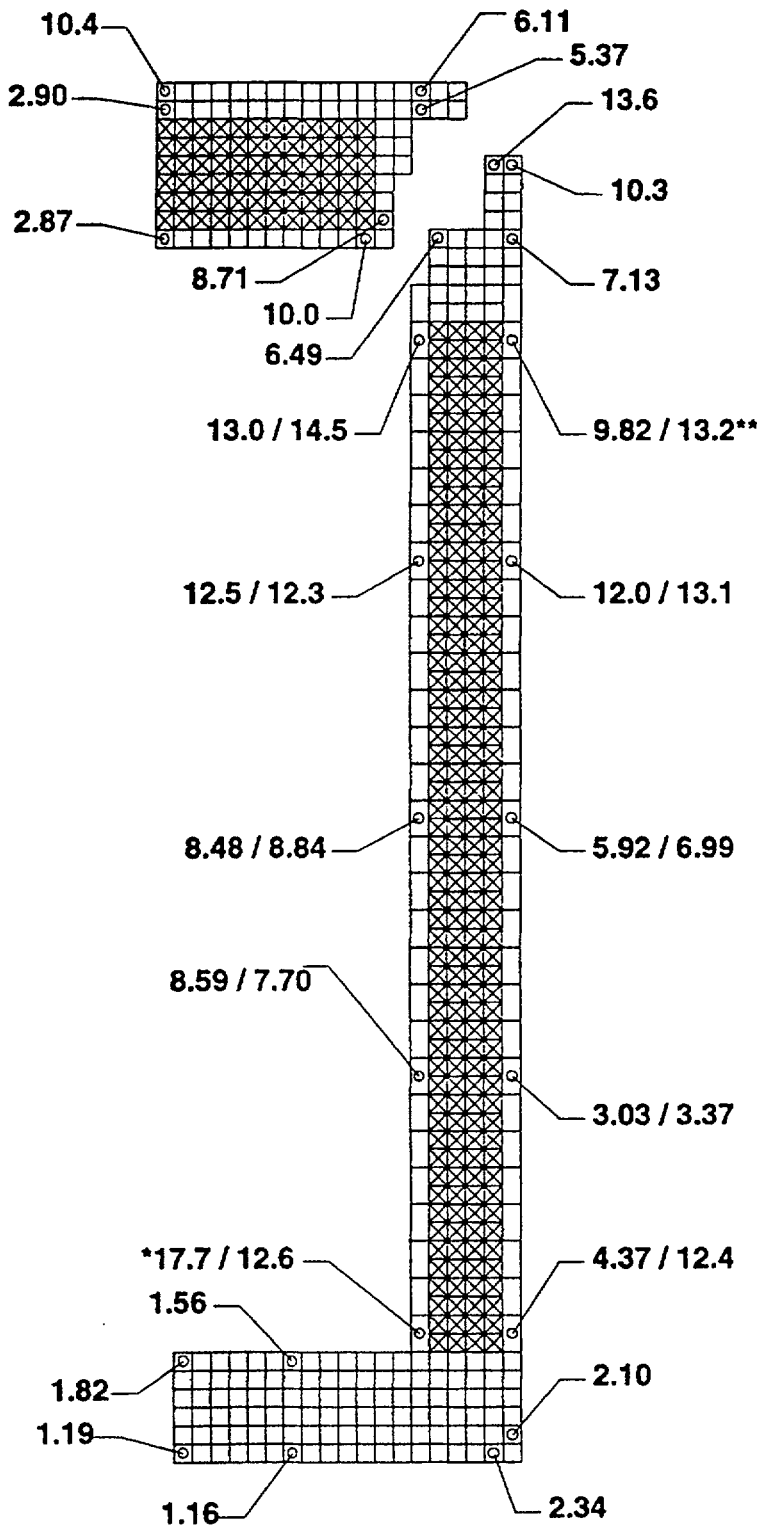


*Max Stress Location
**Max Stress Location for Pm+Pb

**Figure 2.28. Stress Intensity ($P_m + P_b + Q$, ksi) – Free Drop, Head-On Orientation -20°F Ambient Temperature Plus Decay Heat**

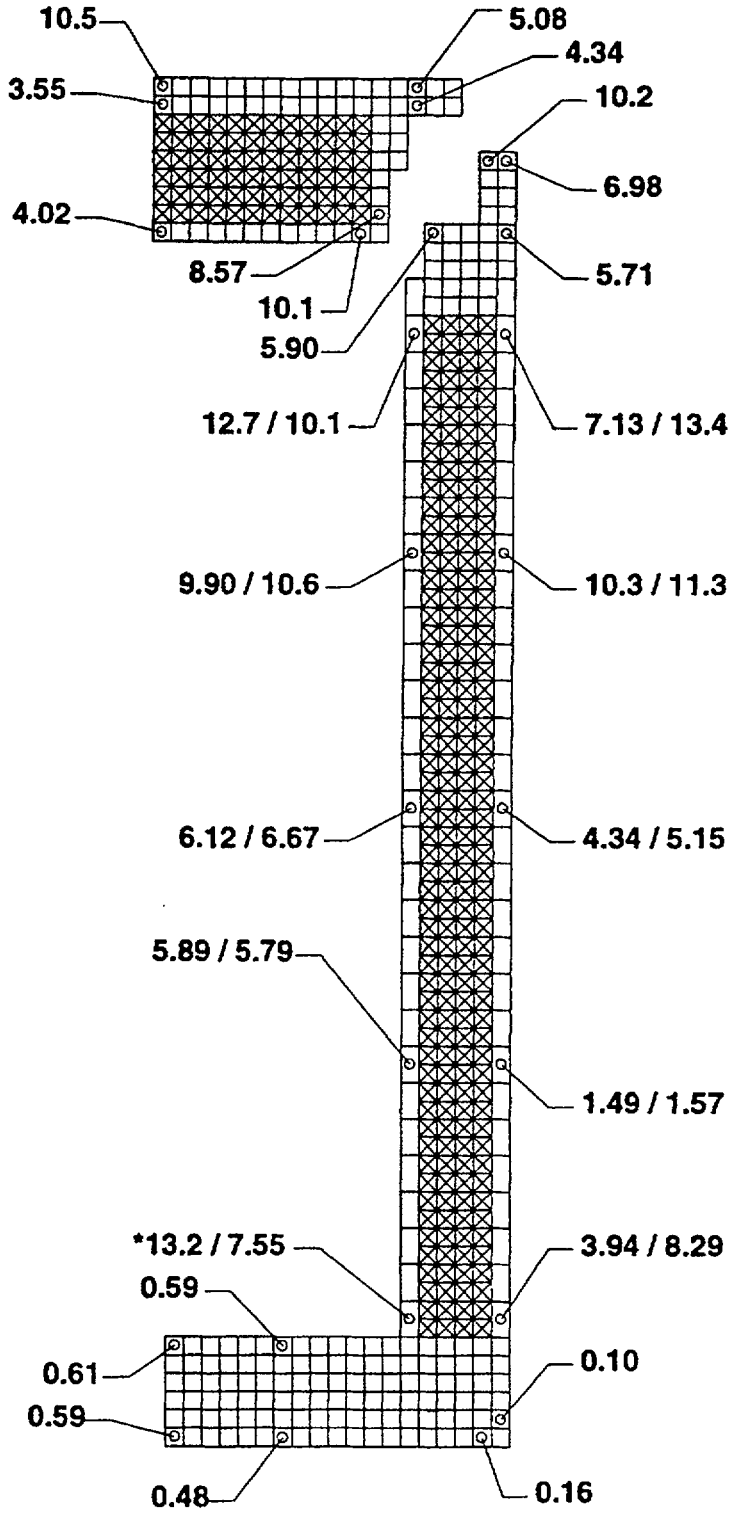


*Max Stress Location

**Figure 2.29. Stress Intensity ($P_m + P_b + Q$, ksi) – Free Drop, Head-On Orientation -20°F Ambient Temperature**

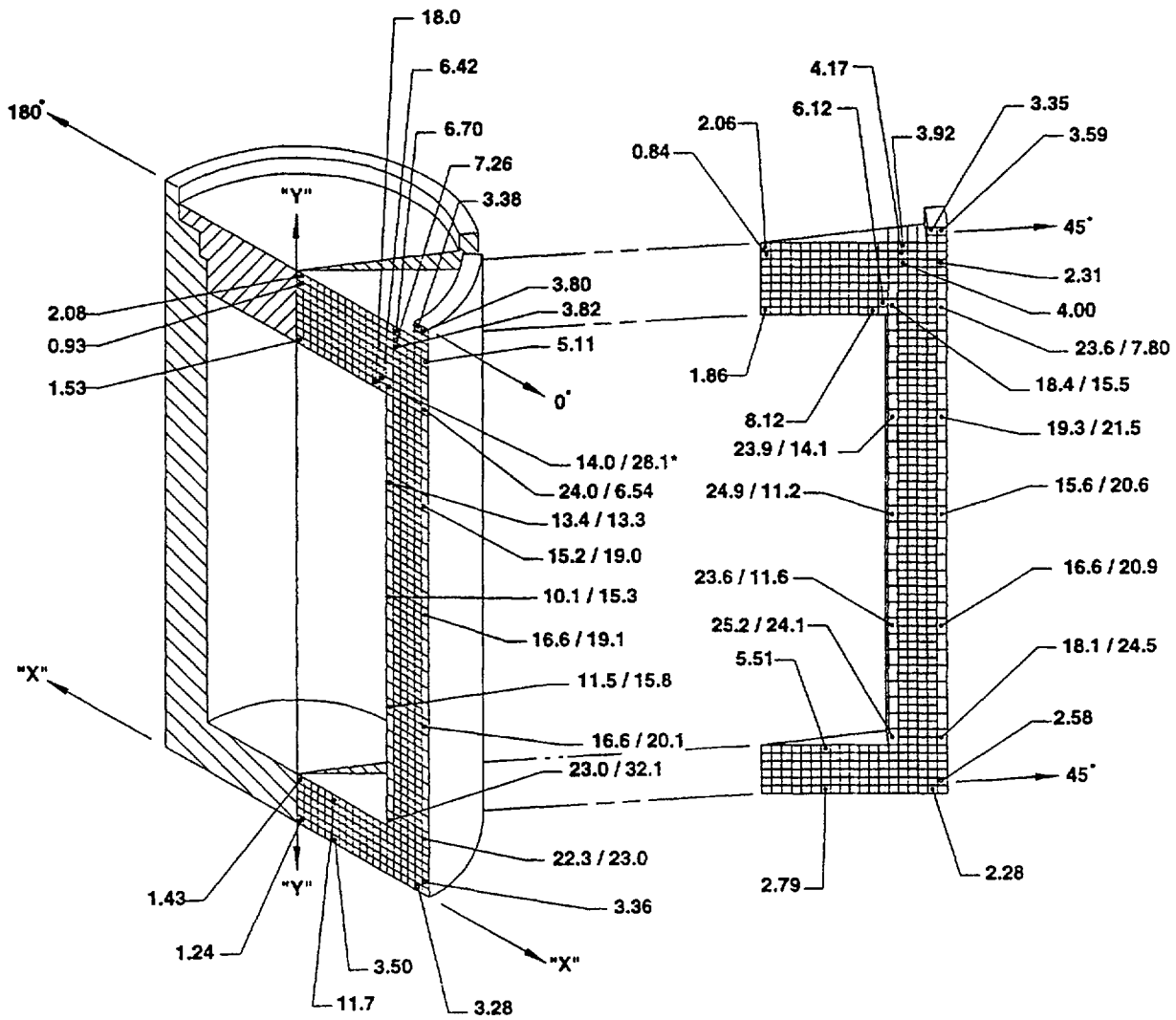


*Max Stress Location

**Figure 2.30. Stress Intensity ($P_m + P_b + Q$, ksi) – Free Drop, Side Orientation, 100°F Ambient Temperature Plus Decay Heat**

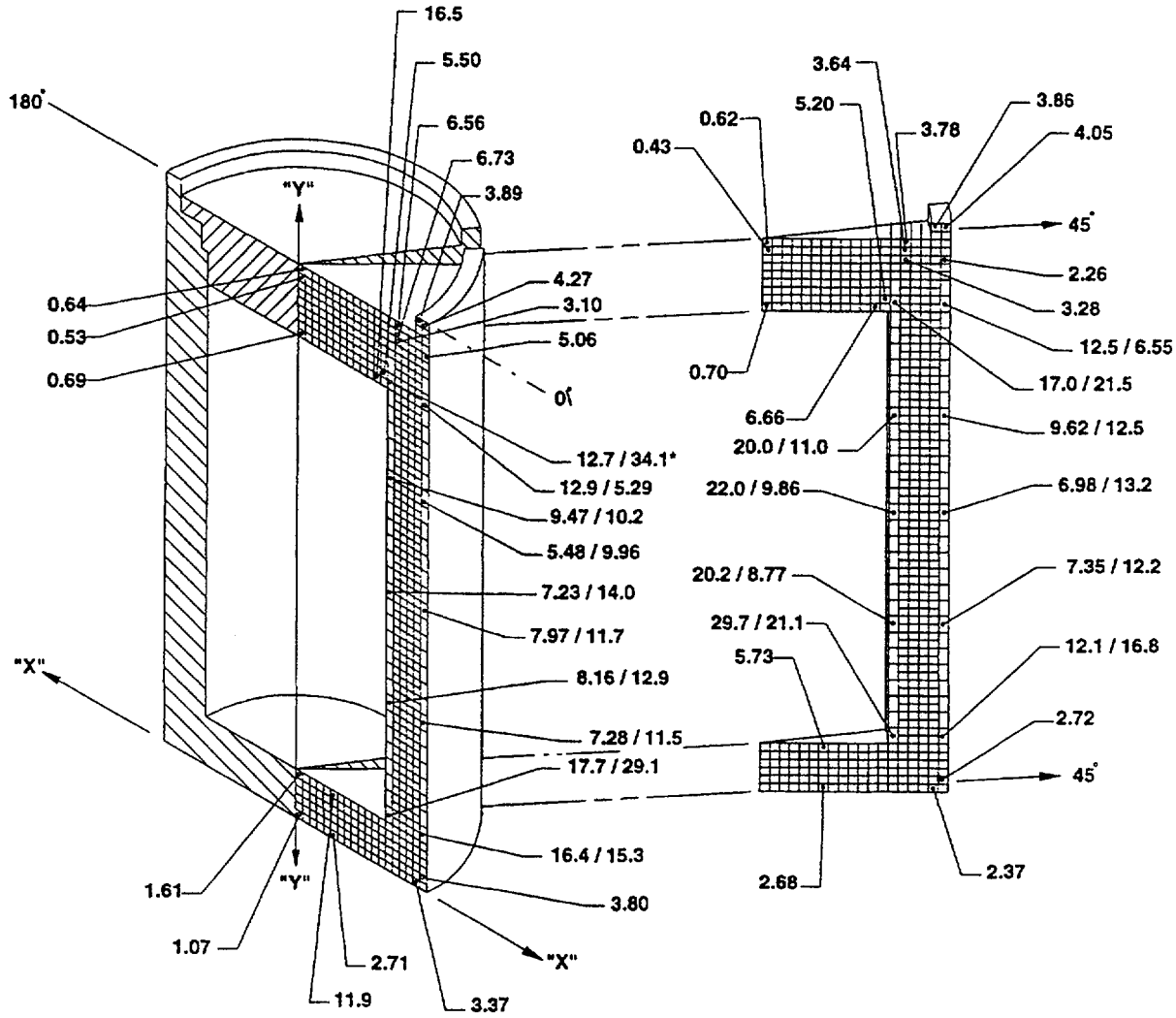


*Max Stress Location

**Figure 2.31. Stress Intensity ($P_m + P_b + Q$, ksi) – Free Drop, Side Orientation, -20°F Ambient Temperature Plus Decay Heat**

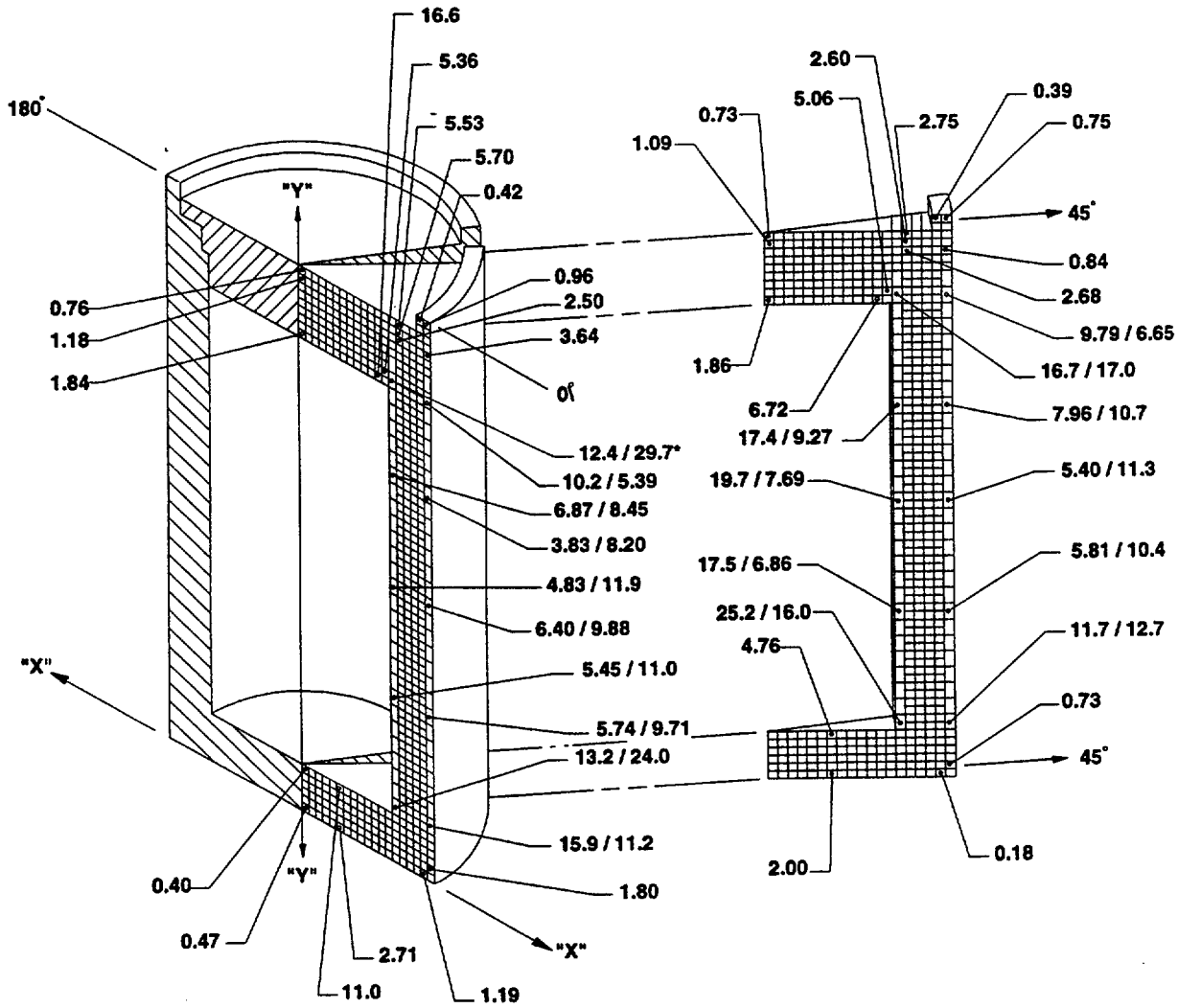


*Max Stress Location

**Figure 2.32. Stress Intensity ($P_m + P_b + Q$, ksi) – Free Drop, Side Orientation -40°F Ambient Temperature Plus Decay Heat**

## 2.7 HYPOTHETICAL ACCIDENT CONDITIONS

The Model 2000 Transport Package has been demonstrated to meet the performance requirements specified in Subpart E of 10CFR71, when subjected to hypothetical accident conditions as specified in 10CFR71.73 [2.1]. According to the U.S. NRC Regulatory Guide 7.6 [2.4], for the hypothetical accident conditions the stress intensities resulting from primary membrane and primary bending stresses are to be investigated. The stress intensities from the thermal stresses are presented in this section.

### 2.7.1 Free Drop

Since the thermal contents heat loading has no effect on the analyses of Free Drop conditions and Puncture conditions, and they are fully analyzed and presented in Reference [2.2], only the results are presented here in Figures 2.33 through 2.35.

### 2.7.2 Puncture

Since the increased contents heat loading does not affect the puncture strength of the Model 2000 package, and since the result has been presented in Reference [2.2], it is not addressed herein.

### 2.7.3 Thermal

The fire condition is analyzed in Section 3.5. In this Section, maximum values of temperatures, pressures and stresses are given.

**2.7.3.1 Summary of Pressures and Temperatures.** The maximum pressure within the cask cavity is 26.8 psia This pressure is based in a Helium temperature of 487°F. The Helium temperature is the average of maximum cavity surface temperature of 415°F and the maximum content temperature of 558°F - refer to Subsection 3.7.3). Table 2.10 presents a summary of maximum temperatures throughout the package. The design pressure of 30 psia corresponds to 100% relative humidity air at 600°F temperature.

The drop event is postulated to occur prior to the postulated accident fire Reference [2.1], therefore, applicable design temperatures for the drop analysis are those given in Table 2.10.

**2.7.3.2 Differential Thermal Expansion.** Differential thermal expansion resulting from the fire transient has minimum consequence to the Model 2000 package. All stresses are classified as secondary displacement-limited stresses. Thermal stress evaluations for certain time intervals are performed, and the results are given in the next subsection. Figure 2.36 presents stress values for the area of highest thermal stress, the joint of the outer shell of the cask with the bottom forging, at two and a half hours into the transient event.

Thermal stresses are classified as secondary stresses. The allowable stress intensity for primary plus secondary is equal to 3.0 $S_M$ (66.0 ksi for SS304): it is concluded that thermal stresses will not limit the design of the Model 2000 cask.

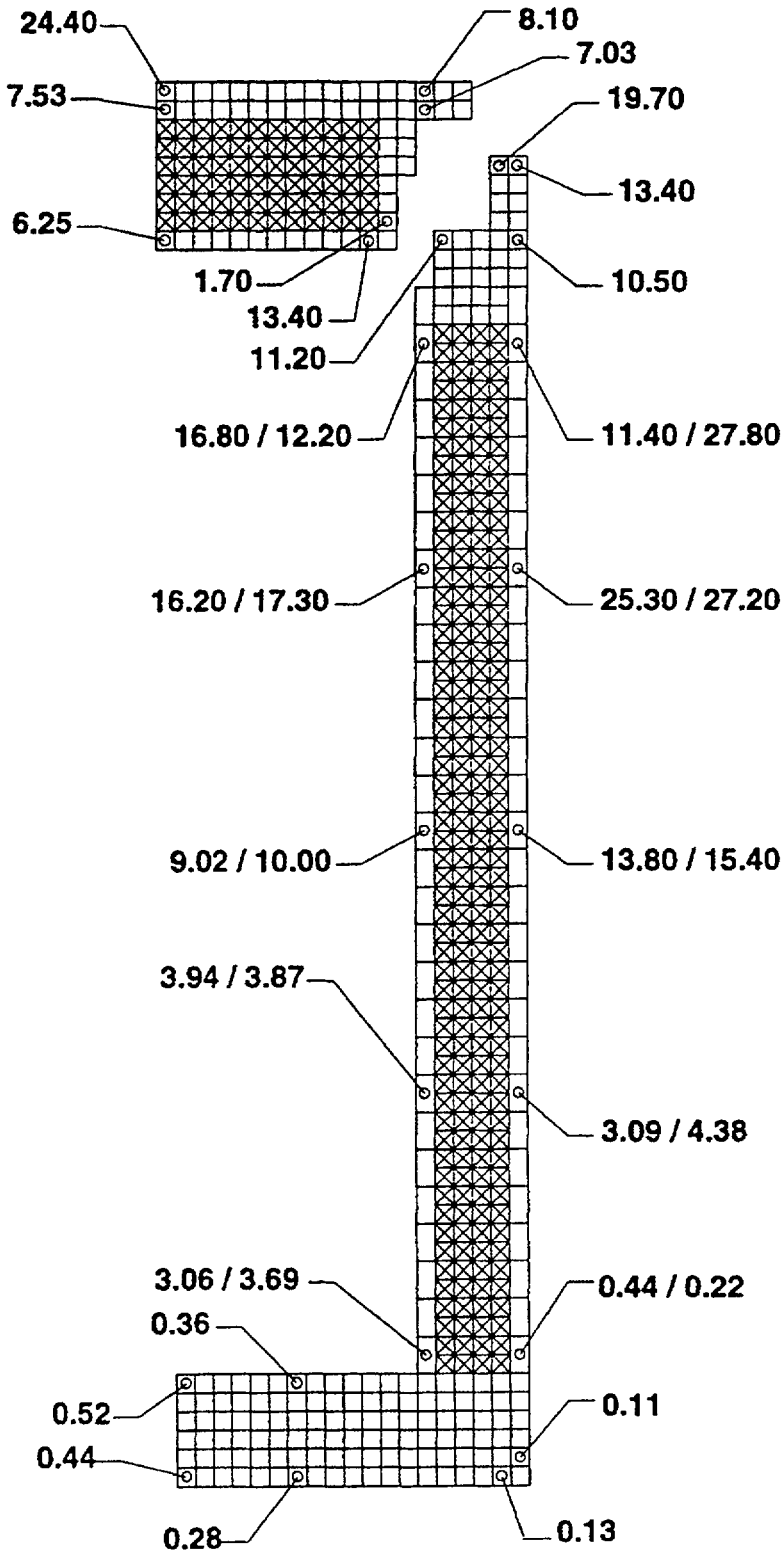


**Figure 2.33.* 30-ft. Free Head-On Drop (Top Orientation) Stress Intensity ($P_m + P_b$, ksi)**

*Refer to reference [2.2], Figure 2.7.1.1.2

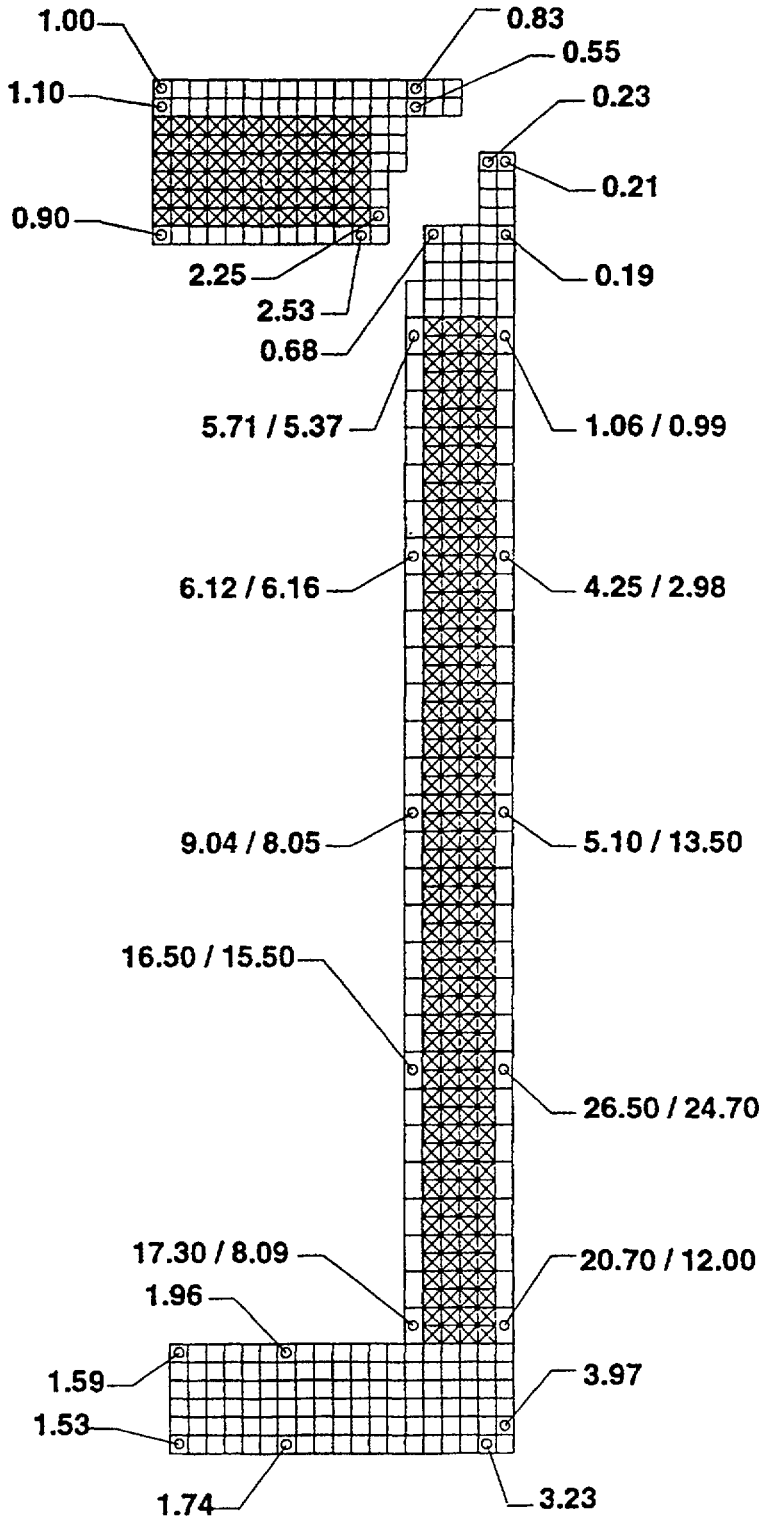


**Figure 2.34.* 30-ft. Free Head-On Drop, (Bottom Orientation) Stress Intensity ($P_m + P_b$, ksi)**

*Refer to reference [2.2], Figure 2.7.1.1.3

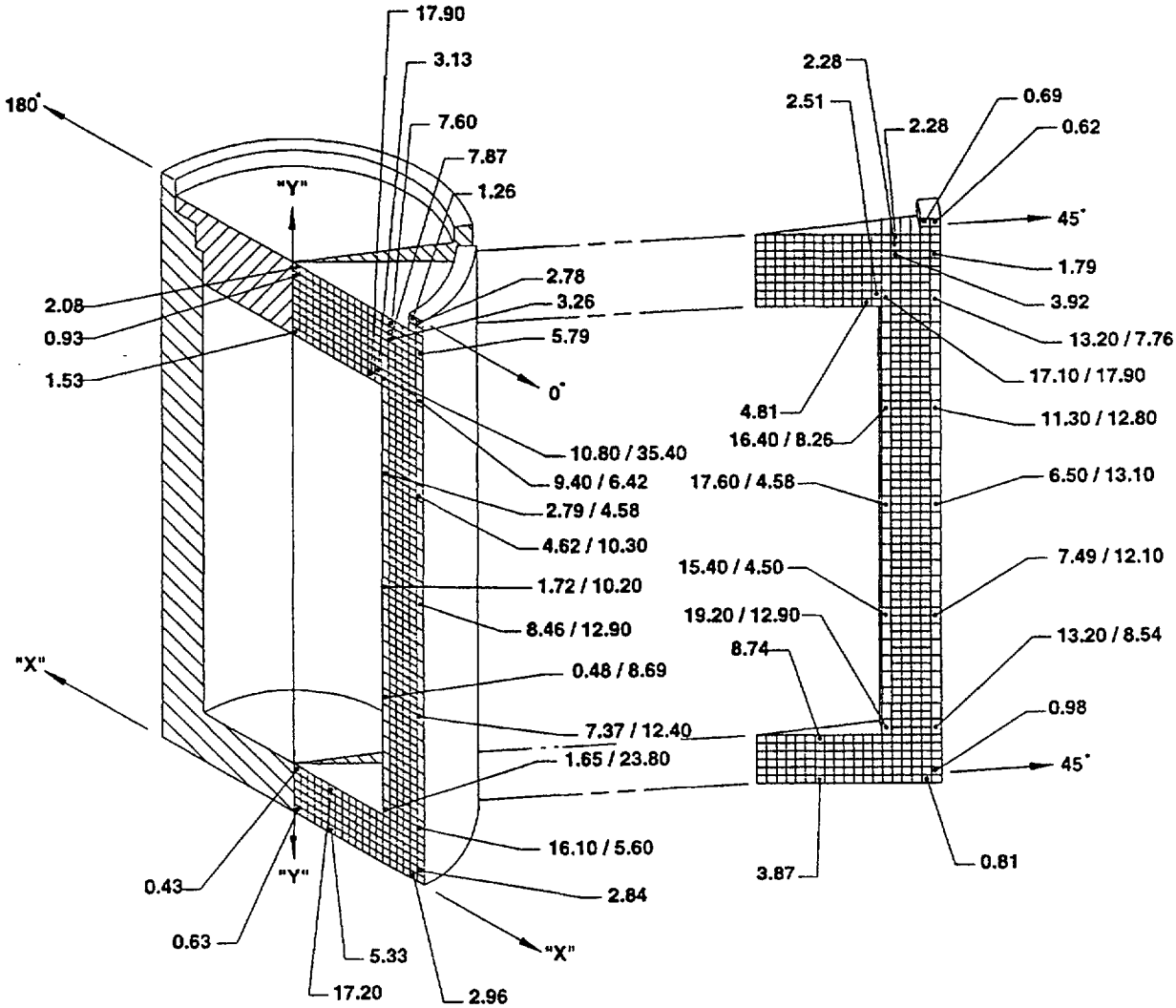


**Figure 2.35.* Stress Intensity Values ($P_m + P_b$, ksi) – Side Orientation, 30-ft. Free Drop**

*Refer to reference [2.2], Figure 2.7.1.2.2

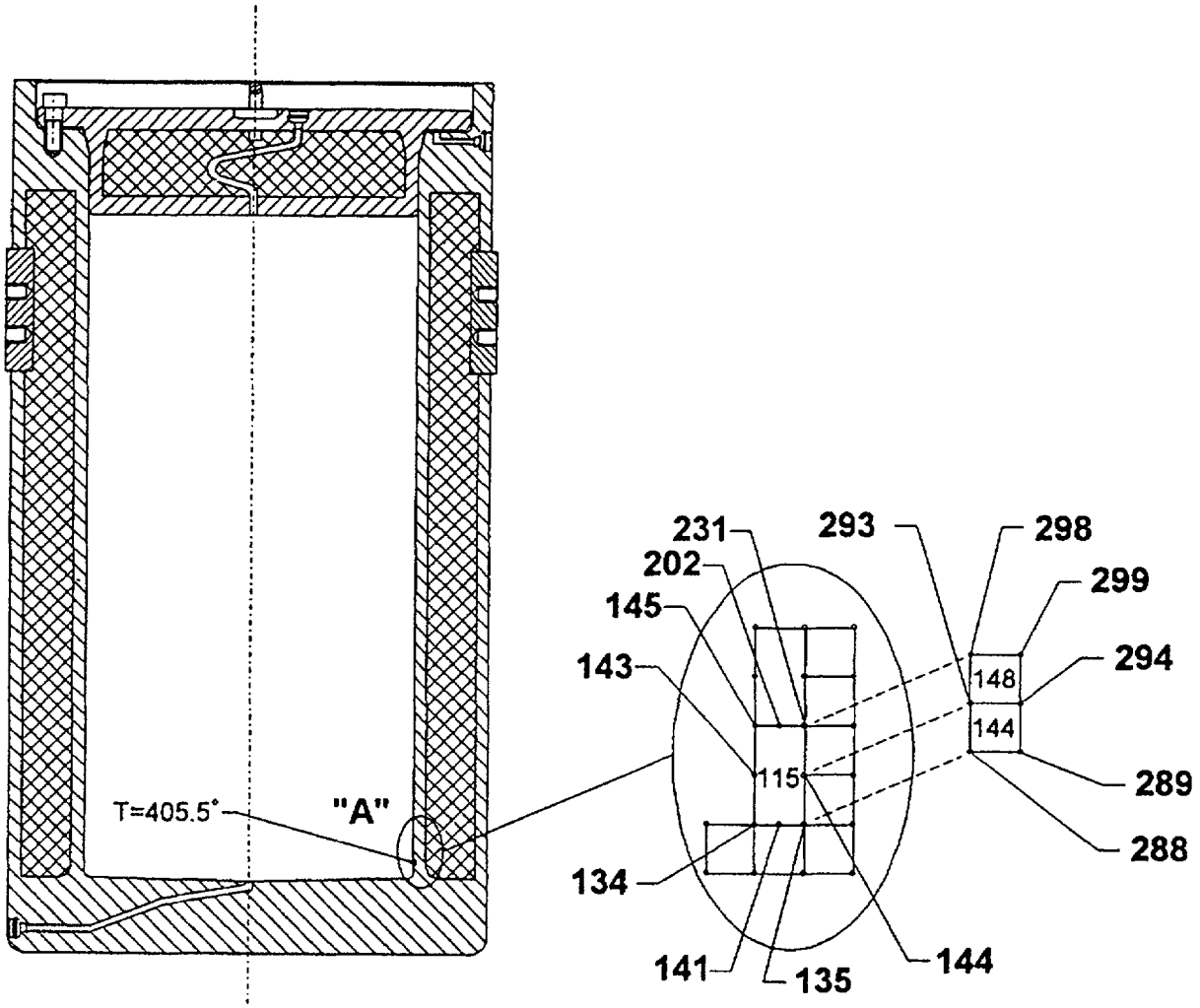


MAXIMUM STRESS INTENSITY

| EL NO | Q (KSI) |
|---|---|
| 115 | 30.8 |

**Figure 2.36. Element Detail of Maximum Stress Intensity for Fire Transient, t=2.5 Hours**

**Table 2.10. Summary of Temperatures**

| Package Component | Max Temp (°F) |
|---|---|
| Cask Cavity | 415 |
| Lead Shield | 413 |
| Cask Seal Area | 381 |
| Cask Outer Surface | 407 |
| Overpack Inner Surface | 821 |
| Overpack Accessible Outer Surface | 1340 |

**2.7.3.3 Stress Calculations.** Figures 2.37 through 2.42 give the thermal stress intensity values throughout the cask for the fire transient condition. Each figure is given at 0.5-hour time intervals. The analyses are performed using finite element methods with the LIBRA program. Detailed discussion of the finite element model and analysis technique are given in Chapter 3.0.

**2.7.3.4 Comparison With Allowable Stresses.** All thermal stresses resulting from the fire transient are within the stress allowable of 60 ksi given in Subsection 2.1.2. The maximum thermal stress intensity value obtained is 30.8 ksi. This high stress area is located at the joint of the cask inner shell with the bottom forging. During the fire transient, the stress intensity value of this area commences at 23.1 ksi for 0.5 hours, peaks at 30.8 ksi at the end of 2.5 hours, and drops to 30.7 ksi after 3.0 hours. Refer to Figures 2.37 through 2.42 for the stress intensity values throughout the cask during the fire transient condition.

### 2.7.4 Immersion – Fissile Material

The criticality evaluation presented in Chapter 6.0 includes the effect of water within the cask cavity to determine the kefr. Therefore, this condition is met by the package.

### 2.7.5 Immersion – All Packages

Since a 21 psig external pressure due to immersion of the package in 50 feet of water as required by 10CFR71 [2.1] Section 73(c)(5) is not affected by increased contents thermal loading, and since it has been analyzed in Reference [2.2], it is not addressed herein.

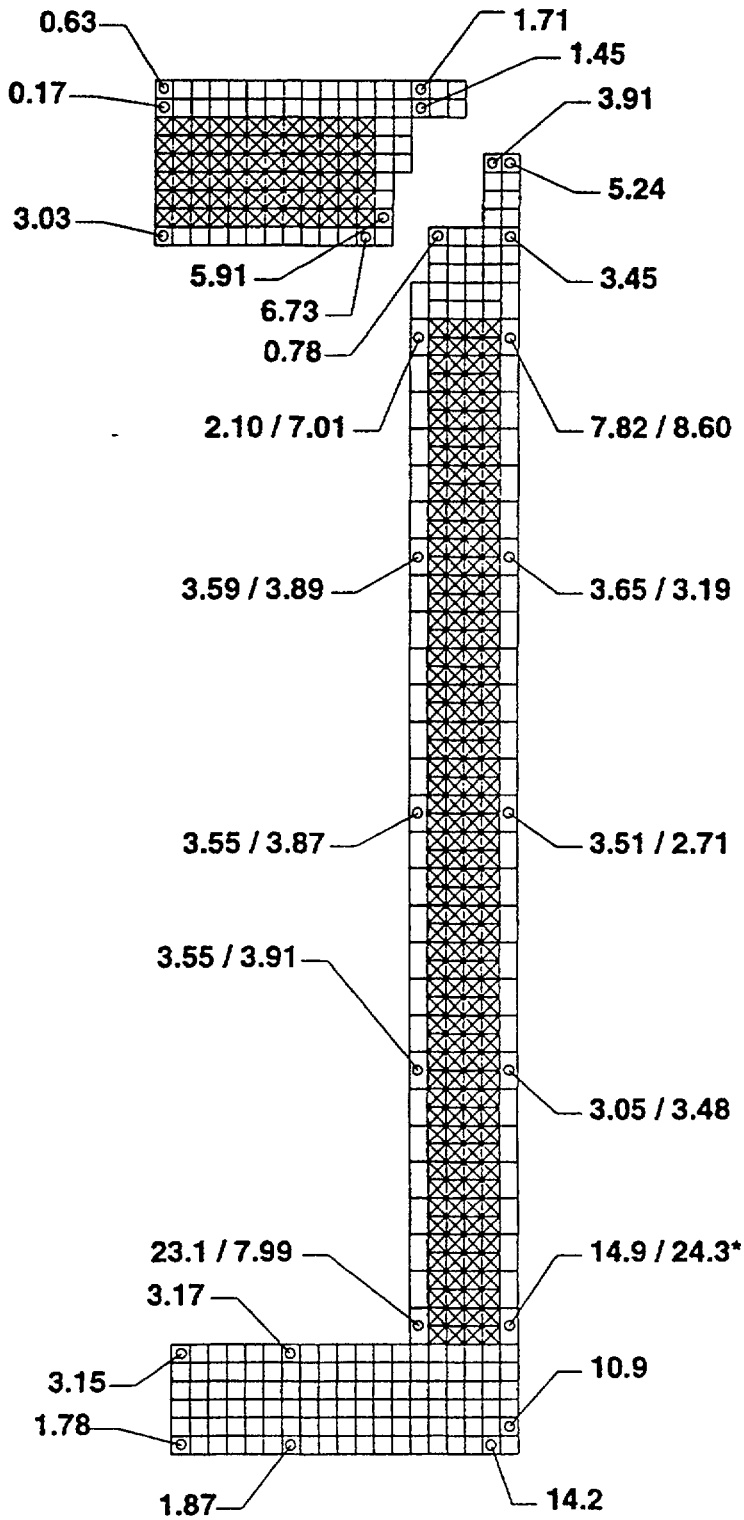


*Max Stress Location

**Figure 2.37. Model 2000 Cask – Thermal Stress Analysis (Q, ksi) Transient Condition (t = 0.05 Hours)**

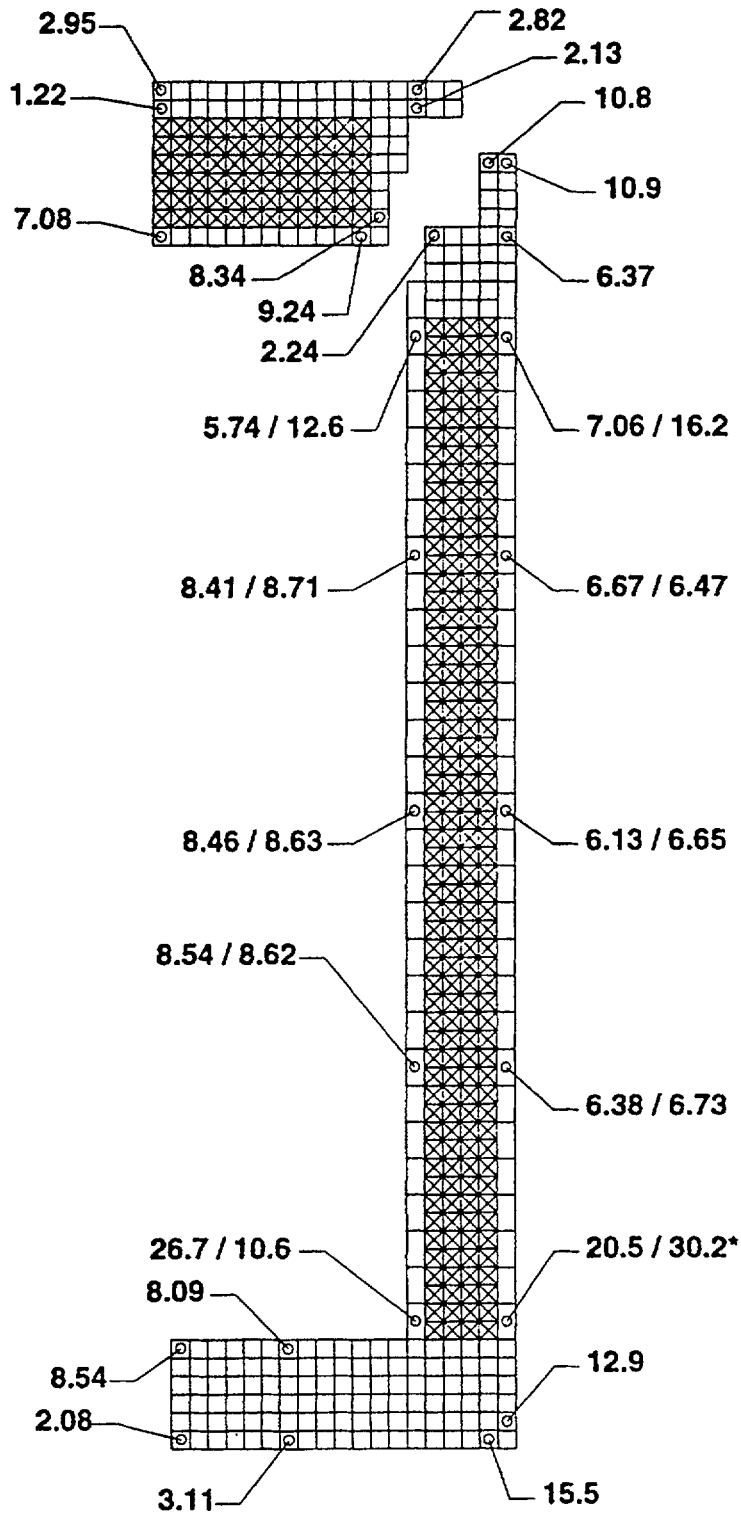


*Max Stress Location

**Figure 2.38. Model 2000 Cask – Thermal Stress Analysis (Q, ksi) Transient Condition (t = 1.0 Hours)**

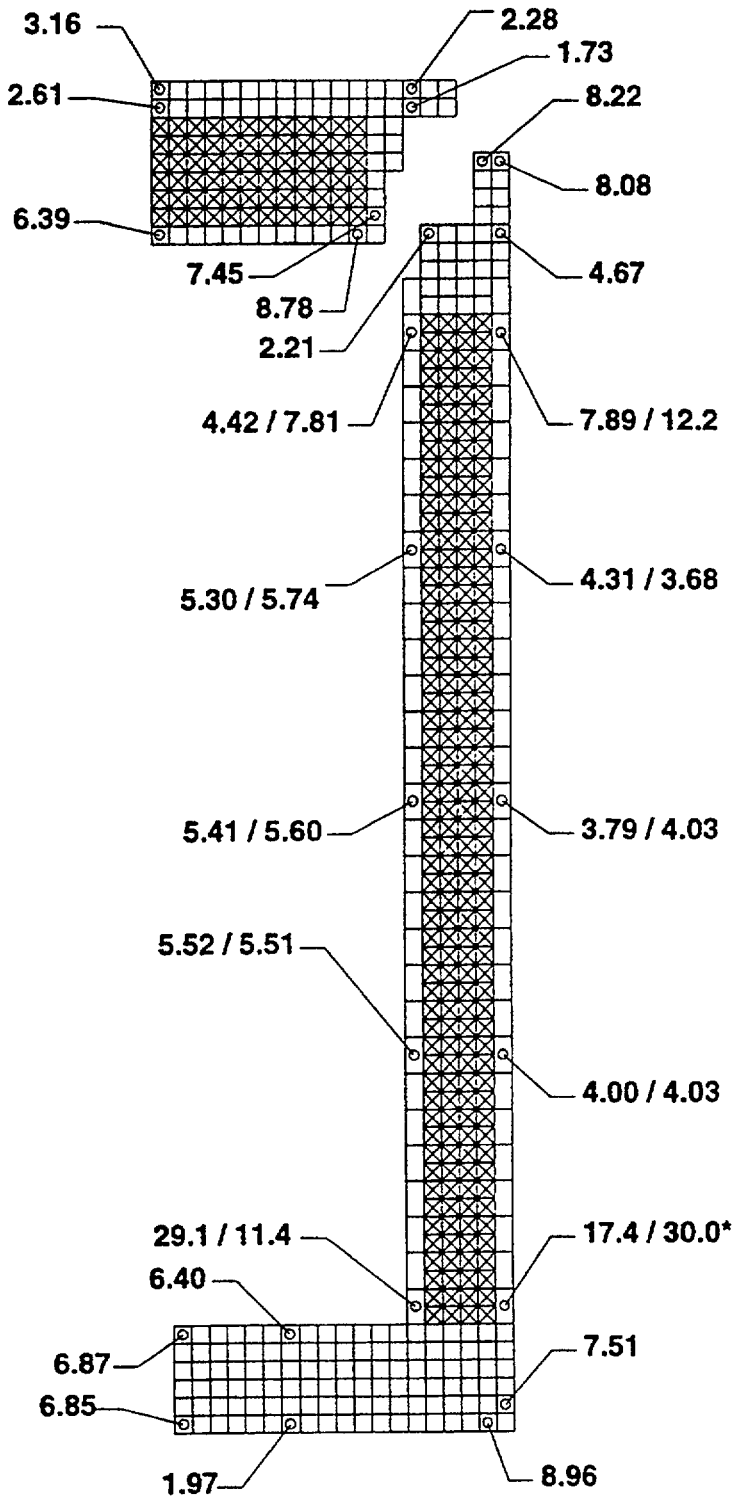


*Max Stress Location

**Figure 2.39. Model 2000 Cask – Thermal Stress Analysis (Q, ksi) Transient Condition (t = 1.5 Hours)**

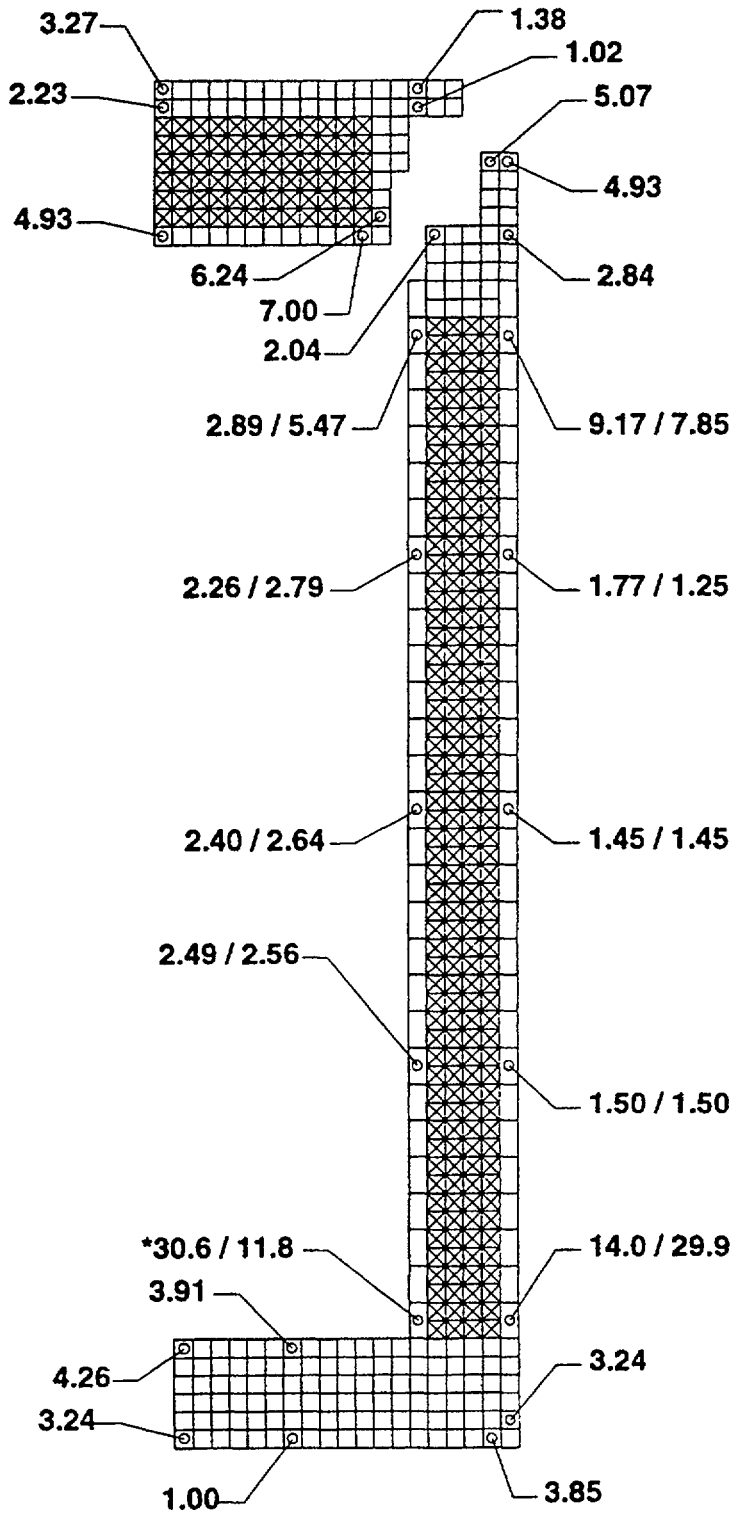


*Max Stress Location

**Figure 2.40. Model 2000 Cask – Thermal Stress Analysis (Q, ksi) Transient Condition (t = 2.0 Hours)**

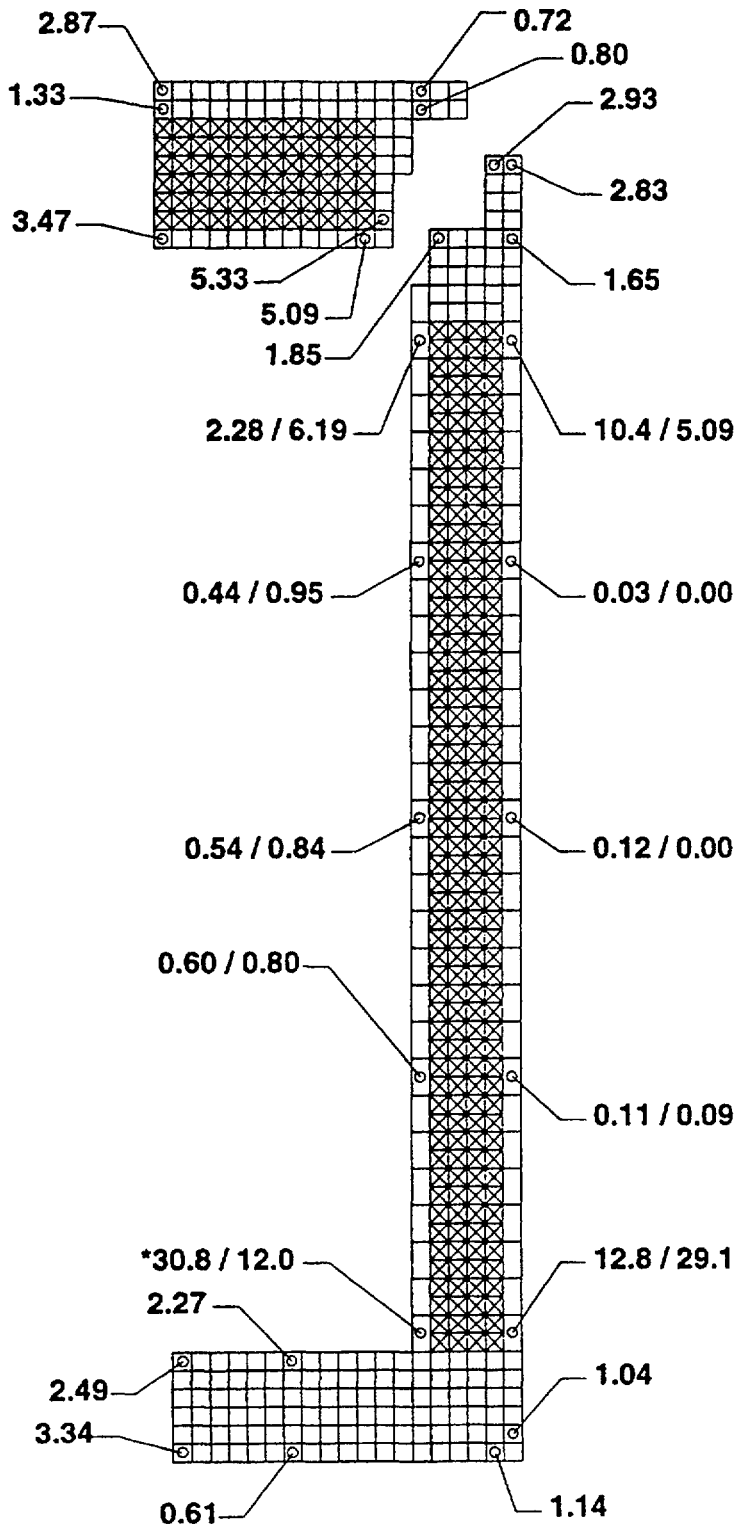


*Max Stress Location

**Figure 2.41. Model 2000 Cask – Thermal Stress Analysis (Q, ksi) Transient Condition (t = 2.5 Hours)**

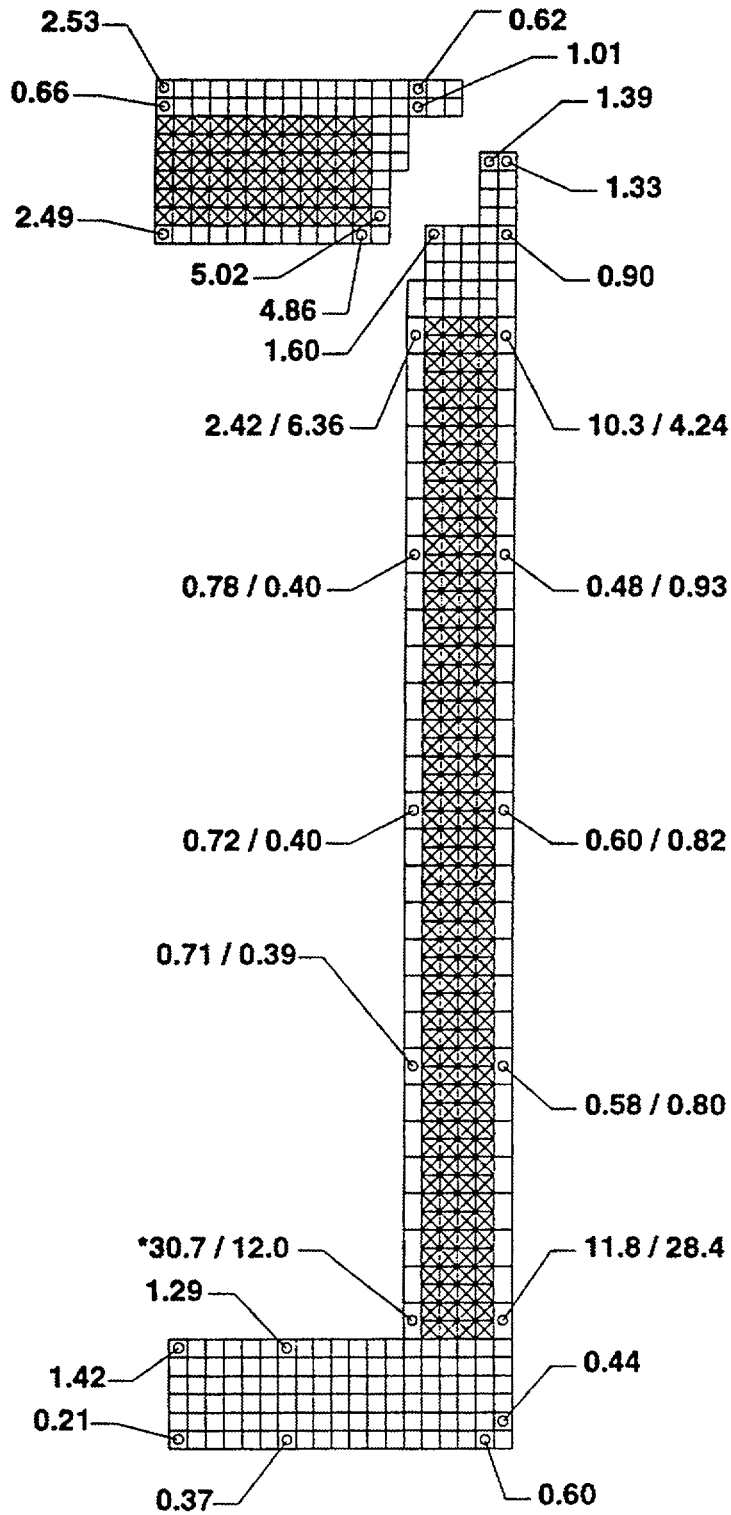


*Max Stress Location

**Figure 2.42. Model 2000 Cask – Thermal Stress Analysis (Q, ksi) Transient Condition (t = 3.0 Hours)**

### 2.7.6 Summary of Damage

The evaluation presented in Subsections 2.7.1 through 2.7.5 demonstrates the ability of the Model 2000 Package to meet the accident conditions as specified in 10CFR71.73, Reference [2.2]. All damage is confined to the overpack structure as designed. The integrity of the containment vessel is not affected by these events. A summary of stresses is presented in Table 2.11, and further tabulations are given in Appendix 2.11.3. Also the maximum stresses between the case with 600 watts contents heat as presented in Reference [2.2] and the case with 2000 watts contents heat are compared and tabulated in Table 2.12. Since the thermal stresses are the only different stresses and other stresses are not combined with Q for accident conditions [2.6], only Q column is updated and compared.

## 2.8 SPECIAL FORM

This section does not apply for the Model 2000 package.

## 2.9 FUEL RODS

This section does not apply for the Model 2000 package.

**Table 2.11. Summary of Results for Accident Conditions**

| Loading Condition | Max. Stress Location (for $P_m + P_b$) | | Temp. (°F) | Stress Intensity Category and Criteria (ksi) | | | | |
|---|---|---|---|---|---|---|---|---|
| | | | | Q | $P_m <$ | $2.4\ S_m$ / $0.7\ S_u$ | $P_m + P_b < 3.6\ S_m$ or $S_u$ | |
| 30-ft Free Drop (Top) @ 100°F + Decay Heat | Outer shell upper region inner surface | 14a | 319 | 11.6 | 26.3 | 48.0 | 25.3 | 70.0 |
| 30-ft Free Drop (Top) @ -20°F + Decay Heat | Outer shell upper region inner surface | 14a | 204 | 1.9 | 26.3 | 48.0 | 25.3 | 70.0 |
| 30-ft Free Drop (Top) @ -20°F | Outer shell upper region inner surface | 14a | -20 | 0.2 | 26.3 | 48.0 | 25.3 | 70.0 |
| 30-ft Free Drop (BTM) @ 100°F + Decay Heat | Outer shell lower section inner surface | 10a | 317 | 11.1 | 25.7 | 48.0 | 26.6 | 70.0 |
| 30-ft Free Drop (BTM) @ -20°F + Decay Heat | Outer shell lower section inner surface | 10a | 206 | 1.8 | 25.7 | 48.0 | 26.6 | 70.0 |
| 30-ft Free Drop (BTM) @ -20°F | Outer shell lower section inner surface | 10a | -20 | 0.3 | 25.7 | 48.0 | 26.6 | 70.0 |
| 30-ft Free Drop (Side) @ 100°F + Decay Heat | Inner shell and upper forging joint | 15b | 324 | 3.3 | 18.8 | 48.0 | 35.4 | 70.0 |
| 30-ft Free Drop (Side) @ -20°F + Decay Heat | Inner shell and upper forging joint | 15b | 211 | 9.3 | 18.8 | 48.0 | 35.4 | 70.0 |
| 30-ft Free Drop (Side) @ -20°F | Inner shell and upper forging joint | 15b | -20 | 4.9 | 18.8 | 48.0 | 35.4 | 70.0 |
| 30-ft Free Drop (CGOC) @ 100°F + Decay Heat | Cask top outer surface | 19 | 304 | 2.9 | 9.49 | 48.0 | 9.49 | 70.0 |
| 30-ft Free Drop (CGOC) @ -20°F + Decay Heat | Cask top outer surface | 19 | 8 | 3.4 | 9.49 | 48.0 | 9.49 | 70.0 |
| 30-ft Free Drop (CGOC) @ -20°F | Cask top outer surface | 19 | -20 | 0.1 | 9.49 | 48.0 | 9.49 | 70.0 |
| Puncture @ 100°F + Decay Heat | Inner shell and upper forging joint | 15b | 324 | 3.3 | 18.8 | 48.0 | 35.4 | 70.0 |
| Puncture @ -20°F + Decay Heat | Inner shell and upper forging joint | 15b | 211 | 9.3 | 18.8 | 48.0 | 35.4 | 70.0 |
| Puncture @ -20°F | Inner shell and upper forging joint | 15b | -20 | 4.9 | 18.8 | 48.0 | 35.4 | 70.0 |
| Fire Accident t = 0.5 Hr. | Lid top flange BTM layer | 22 | 322 | 0.2 | 0.2(1) | 48.0 | 0.2 | 70.0 |
| Fire Accident t = 1.0 Hr. | Lid top flange BTM layer | 22 | 326 | 1.2 | 0.2(1) | 48.0 | 0.2 | 70.0 |
| Fire Accident t = 1.5 Hr. | Lid top flange BTM layer | 22 | 335 | 2.6 | 0.2(1) | 48.0 | 0.2 | 70.0 |
| Fire Accident t = 2.0 Hr. | Lid top flange BTM layer | 22 | 348 | 2.2 | 0.2(1) | 48.0 | 0.2 | 70.0 |
| Fire Accident t = 2.5 Hr. | Lid top flange BTM layer | 22 | 360 | 1.3 | 0.2(1) | 48.0 | 0.2 | 70.0 |
| Fire Accident t = 3.0 Hr. | Lid top flange BTM layer | 22 | 369 | 0.7 | 0.2(1) | 48.0 | 0.2 | 70.0 |

NOTES:

(1) Stresses are given at the centroid of the element; therefore, the same stress value is used for $P_m$ and $P_m + P_b$.

**Table 2.12. Comparison of Stresses for 600 Watts vs. 2000 Watts Contents Heat Accident Conditions**

| Loading Condition | Max. Stress Location (for $P_m + P_b$) | | Stress (ksi) | | | | | |
|---|---|---|---|---|---|---|---|---|
| | | | Q(1) | | $P_m$ | <2.4 $S_m$ or <0.7 $S_u$ | $P_m + P_b$ | <3.6 $S_m$ or <$S_u$ |
| | | | 2000W | 600W | | | | |
| 30-ft Free Drop (Top) @ 100°F + Decay Heat | Outer shell upper region inner surface | 14a | 11.6 | 7.3 | 26.3 | 48 | 25.3 | 70 |
| 30-ft Free Drop (Top) @ -20°F + Decay Heat | Outer shell upper region inner surface | 14a | 1.9 | 0.4 | 26.3 | 48 | 25.3 | 70 |
| 30-ft Free Drop (Top) @ -20°F | Outer shell upper region inner surface | 14a | 0.2 | 0.2 | 26.3 | 48 | 25.3 | 70 |
| 30-ft Free Drop (BTM) @ 100°F + Decay Heat | Outer shell lower section inner surface | 10a | 11.1 | 7.2 | 25.7 | 48 | 26.6 | 70 |
| 30-ft Free Drop (BTM) @ -20°F + Decay Heat | Outer shell lower section inner surface | 10a | 1.8 | 0.4 | 25.7 | 48 | 26.6 | 70 |
| 30-ft Free Drop (BTM) @ -20°F | Outer shell lower section inner surface | 10a | 0.3 | 0.3 | 25.7 | 48 | 26.6 | 70 |
| 30-ft Free Drop (Side) @ 100°F + Decay Heat | Inner shell and upper forging joint | 15b | 3.3 | 3.3 | 18.8 | 48 | 35.4 | 70 |
| 30-ft Free Drop (Side) @ -20°F + Decay Heat | Inner shell and upper forging joint | 15b | 9.3 | 4.4 | 18.8 | 48 | 35.4 | 70 |
| 30-ft Free Drop (Side) @ -20°F | Inner shell and upper forging joint | 15b | 4.9 | 4.9 | 18.8 | 48 | 35.4 | 70 |
| 30-ft Free Drop (CGOC) @ 100°F + Decay Heat | Cask top outer surface | 19 | 2.9 | 0.9 | 9.49 | 48 | 9.49 | 70 |
| 30-ft Free Drop (CGOC) @ -20°F + Decay Heat | Cask top outer surface | 19 | 3.4 | 0.7 | 9.49 | 48 | 9.49 | 70 |
| 30-ft Free Drop (CGOC) @ -20°F | Cask top outer surface | 19 | 0.1 | 0.1 | 9.49 | 48 | 9.49 | 70 |
| Puncture @ 100°F + Decay Heat | Inner shell and upper forging joint | 15b | 3.3 | 3.3 | 18.8 | 48 | 35.4 | 70 |
| Puncture @ -20°F + Decay Heat | Inner shell and upper forging joint | 15b | 9.3 | 4.4 | 18.8 | 48 | 35.4 | 70 |
| Puncture @ -20°F | Inner shell and upper forging joint | 15b | 4.9 | 4.9 | 18.8 | 48 | 35.4 | 70 |
| Fire Accident t = 0.5 Hr. | Lid top flange | 22 | 0.2 | 0.7 | 0.2 | 48 | 0.2 | 70 |
| Fire Accident t = 1.0 Hr. | Lid top flange | 22 | 1.2 | 1.9 | 0.2 | 48 | 0.2 | 70 |
| Fire Accident t = 1.5 Hr. | Lid top flange | 22 | 2.6 | 2.2 | 0.2 | 48 | 0.2 | 70 |
| Fire Accident t = 2.0 Hr. | Lid top flange | 22 | 2.2 | 2.0 | 0.2 | 48 | 0.2 | 70 |
| Fire Accident t = 2.5 Hr. | Lid top flange | 22 | 1.3 | 2.0 | 0.2 | 48 | 0.2 | 70 |
| Fire Accident t = 3.0 Hr. | Lid top flange | 22 | 0.7 | 1.9 | 0.2 | 48 | 0.2 | 70 |

NOTES:

(1) The thermal stresses are at the location corresponding to the maximum $P_m + P_b$.

## 2.10 REFERENCES

2.1. Code of Federal Regulations, Title 10, Part 71, 1983.

2.2. Safety Analysis Report, "G.E. Model 2000 Model 2000 Shipping Package", NEDO 31581, April, 1988.

2.3. Safety Analysis Report, "Model 2000 Radioactive Material Transport Package, HFIR Fuel Basket and Liner", NEDO-32229, July, 1993.

2.4 U.S. NRC Regulatory Guide 7.6, "Design Criteria for the Structural Analysis of Shipping Cask Containment Vessels".

2.5 ASME, Boiler and Pressure Vessel Code, Section m, Subsection NB, 1989.

2.6 ASME Boiler and Pressure Vessel Code, Case N-284, "Metal Containment Shell Buckling Design Methods", Section m, Division 1, Class MC; August 1980.

2.7 ASME, Boiler and Pressure Vessel Code, Section m, Division I, Appendix I, 1989, Figure I-9.2.

2.8 U.S. NRC Regulatory Guide 7.8, "Load Combinations for the Structural Analysis of Shipping Casks", Table 10.

2.9 Military Specification Core Material, Aluminum, for Sandwich Construction, MIL-C-7438F, 1977.

2.10 W. Hoffman, "Lead and Lead Alloys", English Translation of the Second Revised German Edition, Springer-Verlag, New York-Heidelberg-Berlin, 1970.

2.11 Heat Transfer Data Book, D.A. Kaminski, et.al., General Electric Company, NY, 1981, Sct. G515/29, p. 5.

2.12 Tietz, E. Thomas, "Determination of the Mechanical Properties of a High Purity Lead and a 0.05% Copper-Lead Alloy", Stanford Research Institute; Menlo Park, California; April, 1958; WADC Technical Report 57-695, ASTIA Document No. 151165.

2.13 ASME, Boiler and Pressure Vessel Code, Section m, Division I, Appendix I, 1980.

2.14 The International Nickel Company, Inc.; Mechanical and Physical Properties of Austenitic Chromium-Nickel Stainless Steels at Ambient Temperature, 3rd Edition, New York, 1963.

2.15 Private communication with the Department of Meteorology at San Jose State University, San Jose, Ca. 28 July 1993.

2.16 Roark, R.J. and Young, W.C., 'formulas for Stress and Strain", McGraw-Hill, 5th Edition, New York. 1975.

2.17 Bruhn, E.F. "Analysis and Design of Flight Vehicle Structures", E.F. Bruhn. 1973.

## 2.11 APPENDIX

### 2.11.1 Fatigue Evaluation

The cycling stresses of the Transportation Package are caused by the shock and vibration during transportation and cyclic thermal stresses. The fatigue damage is not much of a concern because of low stresses for shock and vibration condition, and because of small number of cycles for the thermal stresses condition.

In addition, Subsection NB, Reference [2.5] provides that fatigue analysis is not required if the conditions specified in subparagraph NE-3222.4 under (d), conditions (1) through (6) are met. These conditions are discussed as follows:

**Condition (1), Atmospheric to Service Pressure Cycle:** The number of cycles that the pressure is cycled from atmospheric pressure and the service should be less than the number of cycles on the fatigue curve of Figure I-9.2.1, Reference [2.7], corresponding to $S_a = 3 \times S_m$. Assuming 50 cycles per year and 100 years of service,

Number of Cycles = $50 \cdot 100 = 5000$ Cycles

For $S_a = 3 \cdot S_m = 60$ ksi,

Number of Cycles from Figure I-9.2.1. = 10,500 Cycles < 5000 Cycles.

**Condition (2), Normal Service Pressure Fluctuation:** The pressure fluctuation during service should be less than Design Pressure $\times$ 1/3 $\times$ ($S/S_m$). The worst temperature fluctuation is selected to be between -20°F and 100°F environment temperatures (or 378°F and 440°F cavity temperatures, respectively). For ideal gas with fixed volume, the pressure fluctuation is calculated as follows: The design pressure is 30 psi at 100°F ambient and the cyclic stress amplitude is selected at $10^6$ cycles from Figure I-9.2.1, Reference [2.7]. Using ideal gas law as discussed in Subparagraph 3.7.3.4.3,

$p1 = 15 \cdot (378 + 460) / (70 + 460) = 23.7$ psi (@378°F)

$p2 = 15 \cdot (440 + 460) / (70 + 460) = 25.5$ psi (@440°F)

$\Delta p = p1 - p2 = 25.5 - 23.7 = 2$ psi

$\Delta p$ allowable = 30 psi $\cdot$ 1/3 $\cdot$ $S_a/S_m = (30) \cdot (1/3) \cdot (28) / (20) = 14$ psi $> \Delta p$

**Conditions (3), (4) and (5), Temperature Differences:** The temperature differences at adjacent points should be less than $S_a/(2 \cdot E \cdot \alpha)$, where E is Elastic modules and $\alpha$ is thermal expansion coefficient of S.S. 304.

$E = 27.6 \cdot 10^6$ psi (at 400°F, conservatively)

$\alpha = 8.5 \cdot 10^{-6}$ /°F (at 200°F, conservatively)

$\Delta T$ allow = $S_a/(2 \cdot E \cdot \alpha) = 28{,}000 / [2 \cdot (27.6 \cdot 106) \cdot (8.5 \cdot 10^{-6}) = 60°F$

A review of the thermal profiles indicates that the maximum temperature variation at any adjacent points is 20°F. The criterion for dissimilar materials allows even larger temperature variation (73°F), while the actual temperature variation between the lead and steel walls is less than 5°F.

**Condition (6), Mechanical Loads:** Stresses ranges from mechanical load do not exceed $S_a$ from Figure I-9.2.1. The maximum stresses during the shock and vibration loading conditions is 5,000 psi, while, $S_a$ at $10^6$ cycles from the same figure is 28,000 psi.

Therefore, according to Subsection NB of Reference [2.5], the fatigue analysis is not required since all conditions specified in subparagraph NB-3222.4 under (d), conditions (1) through (6) are met. However, to eliminate the possibility of any concern, by any reviewer, about the fatigue phenomena on the Transportation Package, the fatigue analysis is done to show that the maximum bound on the fatigue usage factor U would be less than 1.0.

**2.11.1.1 Upper Bound on Fatigue Usage Factor.** There are two basic classes of stress cycles applicable to the structure: 1) mechanical shock and vibration, and 2) thermal stress cycles. While the latter, (2) has a stress range that far exceeds that of the former, (1), the stress cycles of (1) occur at a rate which far exceed the rate for (2) - the fundamental period of vibration is 0.00286 seconds (corresponding to the fundamental frequency 350 Hz as discussed in Paragraph 2.11.2.1) and the shortest period of a thermal cycle is on the order of 24 hours, yielding the ratio of $\sim 30 \cdot 10^6$ for the cycling ratio between the two. This means that the cycling of (1) occurs at a mean stress level which is provided by (2) and varying very slowly. For this reason, Curve C of Appendix I, Figure I-9.22, of Reference [2.7] which includes the maximum mean stress effect, is conservatively used for shock and vibration.

**2.11.1.2 Shock and Vibration.** Referring to Table 2.8 for the shock and vibration condition, the highest stress occurs at the inner shell and the bottom forging joint. The stress amplitude is calculated as, using a stress concentration factor of 4 and adjusting for the elastic modules according to Subsection NE of the ASME code,

$$S_a,tr = (1.15) \cdot (4) \cdot (28.3 \times 10^6 / 27.7 \times 10^6) = 2.1 \text{ ksi}$$

This results in approximately $10^{11}$ cycles from Curve C of, Figure I-9.22.

The number of stress cycles during transportation is estimated for the service life of 100 years, assuming that conservatively, there are yearly 52 round trips of 10 hours duration each way and

using the fundamental frequency of 350 Hz (estimated from the modal analysis of the same finite element model), as

$$Ntr = (350 \text{ cycles/sec}) \cdot (52 \cdot 2 \cdot 10 \cdot 3600 \text{ sec}) \cdot 100 \text{ years} = 1.3 \cdot 10^{11} \text{ total cycles}$$

Even if 1013 allowable cycles were used (it should be noted that extrapolating Curve C of Figure I-9.22, for 2.1 ksi, 1025 is a more proper number to use), for transportation shock and vibration cycles

$$Utr < 1.3 \cdot 10^{11} / 10^{13} = +0.01$$

**2.11.1.3 Thermal Stresses.** For the sake of simplicity and the conservative analysis, the maximum extremes of temperatures (-20°F and 100°F) are selected to simulate the thermal stress cycle conditions. For one year period, the temperatures are assumed to vary between -20°F and 100°F every day. It should be noted that the record for the maximum temperature change in a 24 hour period ever since records have been kept is 100°F which happened in Montana, Reference [2.15]. In addition, in lieu of examining the cumulative damage ratios at several candidate points, the fatigue usage ratio from the highest stresses caused by shock and vibration and that from the highest stresses caused by thermal cycles will be used. This will be the most obvious way to convey the final conclusion. Note that these two categories of stresses will be at different locations.

For the thermal stress cycle the highest stress range is at the Inner Shell and Bottom Forging Joint. According to Paragraph NB-3216 of Reference [2.5], the cyclic stress amplitude $S_a$ is calculated

$$S_a, th = 4 \cdot (21.9 - 16.6)/2 = 10.6 \text{ ksi}$$

From Curve C of Figure I-9.2.2, for $S_a$ = 13.7 ksi at $10^{11}$ cycles, the fatigue usage is then

$$Uth = 100 \cdot 365 / 10^{11} = +0.00$$

It is therefore follows that the total fatigue usage

$$U = Utr + Uth = +0.00 < 1.0.$$

As expected, the total fatigue usage factor is negligible in this case because of small number of service cycles compared with the allowable stress cycles.

### 2.11.2 Buckling Analysis per ASME Code Case N-284 [2.6]

The Model 2000 cask shells, under normal and accidental conditions, are potentially subject to forces which could cause buckling instability (e.g., shrink-fit pressure of lead onto the inner shell, side drop event forces, etc.). Buckling is an unacceptable failure mode for the containment vessel per Reference [2.3]. The buckling evaluation that follows is based upon the ASME Code Case N-284, Reference [2.6]. It is performed for the effects of two toroid wall thickness sizes, 0.50 and 0.76 inch, for the drop environment. The evaluation shows that buckling is not a mode of failure for the Model 2000 cask under normal or accident conditions for both toroid wall thickness sizes.

Under the requirements of Code Case N-284 for a shell buckling evaluation of an unstiffened cylindrical shell, the following steps are required.

1. **Stress Analysis Procedure.** The governing factor in the buckling analysis of a containment shell is the compressive membrane stress zones. The internal stress field which controls the buckling of a cylindrical shell consists of the longitudinal membrane, circumferential membrane, and in-plane shear stresses. An axisymmetric Smite element model is used in the analyses of all applied loadings. Nonaxisymmetric loadings are considered by use of an adequate number of Fourier harmonics. When combining the effects of different applied loads which act concurrently, each of the three stress components is summed algebraically. If the sum of the longitudinal or circumferential components is tension, then that stress component is set to zero. Thermal stresses are treated the same as primary stresses. Axisymmetric applied load conditions consider the in-plane shear stress as 0.0. However, maximum shear stress (tetrahedral shear stress) is used for buckling analysis for conservatism.

   The evaluation presented within this section uses the maximum stress values for each component from all load combinations described in Table 2.2. The load combination selected and the resulting stresses are given in Table 2.13. Stresses are the average values through the entire length of the shell. Similar values can be obtained by averaging the component stress values given in Subsection 2.14 tables for the applicable load combination as follows.

For $\sigma_\theta$ ($\sigma_3$) normal conditions, inner shell:

| Location | Loading Conditions | | |
|---|---|---|---|
| | 100°F Temp + D.H. + Solar + Fab Str | 30 psi Internal Pressure | 1-Foot Drop Top Orientation |
| 7a | -17,000 | 45 | -63 |
| 7b | 4,050 | -9 | -35 |
| 9a | -10,400 | 110 | -208 |
| 9b | -9,560 | 101 | -207 |
| 11a | -9,550 | 108 | -208 |
| 11b | -8,220 | 99 | -208 |
| 13a | -10,800 | 110 | -229 |
| 13b | -9,880 | 103 | -187 |
| 15a | -4,350 | 7 | -223 |
| 15b | -5030 | -35 | -136 |
| Average Stress | -8,084 | 64 | -170 |

The hoop stress is now calculated as $\sigma_\theta$ = -8,084 + 64 - 170 = -8,190 psi

**Table 2.13. Calculated Membrane Stress Component (psi) Toroid Wall Thickness of 0.5 Inch**

| Stress Point | Toroid Wall Thickness, 0.5 Inch | | | |
|---|---|---|---|---|
| | Load Combinations | | | |
| | Normal | | Accident | |
| | Inner | Outer | Inner | Outer |
| $\sigma_\phi$ | 8,230 | 3,200 | 12,800 | 7,800 |
| | Free Drop @ -20°F temp. plus press., side orientation (45° mer) | Free Drop @ 100°F temp. plus press., side orientation (0° mer) | 30-ft. Drop @ -20°F temp. plus press., BTM orientation | 30-ft. Drop @ 100°F temp. plus press., side orientation (0° mer) |
| $\sigma_\theta$ | 8,190 | 197 | 12,500 | 8,240 |
| | Free Drop @ 100°F temp. plus press., top orientation | Free Drop @ -20°F temp. plus press., side orientation (0° mer) | 30-ft. Drop @ 100°F temp. plus press., BTM orientation | 30-ft. Drop @ -20°F temp. plus press., side orientation (0° mer) |
| $\sigma_{\phi\theta}$ | 4,110 | 1,610 | 6,360 | 3,910 |
| | Free Drop @ 100°F temp. plus press., top orientation | Free Drop @ 100°F temp. plus press., side orientation (0° mer) | 30-ft. Drop @ -20°F temp. plus press., BTM orientation | 30-ft. Drop @ 100°F temp. plus press., side orientation (0° mer) |

**Table 2.14. Calculated Membrane Stress Component (psi) Toroid Wall Thickness of 0.76 Inch**

| Stress Point | Toroid Wall Thickness, 0.76 Inch | | | |
|---|---|---|---|---|
| | Load Combinations | | | |
| | Normal | | Accident | |
| | Inner | Outer | Inner | Outer |
| $\sigma_\phi$ | 10,100 | 7,360 | 14,900 | 9,670 |
| | Free Drop @ -20°F temp. plus press., side orientation (45° mer) | Free Drop @ 100°F temp. plus press., side orientation (0° mer) | 30-ft. Drop @ -20°F temp. plus press., BTM orientation | 30-ft. Drop @ 100°F temp. plus press., side orientation (0° mer) |
| $\sigma_\theta$ | 8,020 | 788 | 15,900 | 1,080 |
| | Free Drop @ 100°F temp. plus press., top orientation | Free Drop @ -20°F temp. plus press., side orientation (0° mer) | 30-ft. Drop @ 100°F temp. plus press., BTM orientation | 30-ft. Drop @ -20°F temp. plus press., side orientation (0° mer) |
| $\sigma_{\phi\theta}$ | 4,980 | 3,820 | 7,390 | 4,840 |
| | Free Drop @ -20°F temp. plus press., top orientation | Free Drop @ 100°F temp. plus press., side orientation (0° mer) | 30-ft. Drop @ 100°F temp. plus press., BTM orientation | 30-ft. Drop @ 100°F temp. plus press., side orientation (0° mer) |

where:

$\sigma_\phi$ = calculated meridional membrane stress

$\sigma_\theta$ = calculated circumferential membrane stress

$\sigma_{\phi\theta}$ = calculated in-plane shear stress component

2. **Application of Factors of Safety (FS).** These factors are applied to the calculated membrane stress components.

   For Normal Transport Conditions, Level A Service Limits, FS = 2.0.

   For Accident Conditions, Level D Service Limits, FS = 1.34.

3. **Application of Capacity Reduction Factors ($\alpha_i$).** These factors are applied to the calculated membrane stress components to account for nonlinearity, imperfections in geometry, and boundary conditions for fabricated shells.

   (a) Axial Compression

   Use the larger of the values determined for $\alpha_\phi$ from (i) and (ii).

(i) Effect of R/t, use the smaller value of:

$$\left.\begin{aligned}\alpha_\phi &= 1.52 - 0.473\log_{10}(R/t)\\ \alpha_\phi &= 1.0\times10^{-5}\,\sigma_y - 0.033\end{aligned}\right\}\text{for } R/t < 600$$

(ii) Effect of length

$$\alpha_\phi = 0.207 \qquad \text{if } M \geq 10$$

where:

| | | | Inner Shell | Outer Shell |
|---|---|---|---|---|
| R | = | shell radius (in.) | 13.75 | 18.75 |
| t | = | shell thickness (in.) | 1.0 | 1.0 |
| *li* | = | distance in i direction between lines of support (in.) | 56.0 | 56.0 |
| Mi | = | $li/\sqrt{Rt}$ | 15.10 | 12.93 |

The yield stress of material, $\sigma_y$ is calculated at respective component temperatures using the curve fitted formula based on the material data in Table 2.5 as follows:

$$\sigma_y = 3.90E{+}1 - 1.205E{-}1*T + 3.05E{-}4*T^2 - 3.00e{-}7*T^3 \text{ (ksi)}$$

Results from (i) and (ii) define the capacity reduction factors for axial compression for:

inner shell: $\alpha_\phi = 0.207$

outer shell: $\alpha_\phi = 0.207$

(b) Hoop Compression

$\alpha_\theta = 0.8$ (for both inner and outer shells)

(c) Shear (for R/t < 250)

$\alpha_{\phi\theta} = 0.8$ (for both inner and outer shells)

4. **Application of Plasticity Reduction Factors ($\eta_i$).** The elastic buckling stresses for fabricated shells are given by the product of the classical buckling stresses and the capacity reduction factors, i.e., $\sigma_{ie}\ \alpha_i$. When these values exceed the proportional limit of the fabricated material, plasticity reduction factors, in;, are used to account for the non-linear material properties. The inelastic buckling stresses for fabricated shells are given by $\eta_i\ \sigma_{ie}\ \alpha_i$.

(a) Axial Compression

$$\eta_\phi = 1.0 \qquad \text{if } \frac{\sigma_\phi FS}{\sigma_y} < 0.55$$

$$\eta_\phi = \frac{0.18}{1-\dfrac{0.45\sigma_y}{\sigma_\phi FS}} \qquad \text{if } 0.55 < \frac{\sigma_\phi FS}{\sigma_y} \le 0.738$$

$$\eta_\phi = 1.31 - 1.15\frac{\sigma_\phi FS}{\sigma_y} \qquad \text{if } 0.738 < \frac{\sigma_\phi FS}{\sigma_y} < 1.0$$

(b) Hoop Compression

$$\eta_\theta = 1.0 \qquad \text{if } \frac{\sigma_\theta FS}{\sigma_y} \le 0.67$$

$$\eta_\theta = 2.53 - 2.29\frac{\sigma_\theta FS}{\sigma_y} \qquad \text{if } 0.67 < \frac{\sigma_\theta FS}{\sigma_y} \le 1.0$$

(c) Shear

$$\eta_{\phi\theta} = 1.0 \qquad \text{if } \frac{\sigma_{\phi\theta} FS}{\sigma_y} \le 0.48$$

$$\eta_{\phi\theta} = \frac{0.1}{1-\dfrac{\sigma_y}{\sigma_{\phi\theta} FS}} \qquad \text{if } 0.48 < \frac{\sigma_{\phi\theta} FS}{\sigma_y} \le 0.6$$

Using the calculated stresses listed in Table 2.13 and Table 2.14 in the equations defined above gives the plasticity reduction factors shown in Table 2.15. Inelastic buckling relationship must be satisfied when any of the values of $\eta_1$; is less than 1.0. Results show that there are some cases where $\eta_\phi$ or $\eta_\theta$ is less than 1.0, which are evaluated for inelastic buckling in the subsequent steps.

**Table 2.15. Plasticity Reduction Factors**

| | | Toroid Wall = 0.5 Inch | | | | Toroid Wall = 0.76 Inch | | | |
|---|---|---|---|---|---|---|---|---|---|
| | | Normal | | Accident | | Normal | | Accident | |
| | | Inner | Outer | Inner | Outer | Inner | Outer | Inner | Outer |
| **Factor of Safety** | **FS** | **2** | **2** | **1.34** | **1.34** | **2** | **2** | **1.34** | **1.34** |
| Stresses | $\sigma_\phi$ | 8230 | 3200 | 12800 | 7800 | 10100 | 7630 | 14900 | 9670 |
| | TEMP (F) | 233 | 322 | 233 | 322 | 233 | 322 | 233 | 322 |
| | $\sigma_\gamma$ (psi) | 23987 | 22107 | 23987 | 22107 | 23987 | 22107 | 23987 | 22107 |
| | E (psi) | 27.5E+06 | 27.0E+06 | 27.5E+06 | 27.0E+06 | 27.5E+06 | 27.0E+06 | 27.5E+06 | 27.0E+06 |
| | $\sigma_\phi$ * FS/$\sigma_\gamma$ | 0.686 | 0.290 | 0.715 | 0.473 | 0.842 | 0.690 | 0.832 | 0.586 |
| | $\sigma_\theta$ | 8190 | 197 | 12500 | 8240 | 8020 | 788 | 15900 | 1080 |
| | TEMP (F) | 341 | 208 | 341 | 208 | 341 | 208 | 341 | 208 |
| | $\sigma_\gamma$ (psi) | 21780 | 24732 | 21780 | 24732 | 21780 | 24732 | 21780 | 24732 |
| | E (psi) | 26.9E+06 | 27.6E+06 | 26.9E+06 | 27.6E+06 | 26.9E+06 | 27.6E+06 | 26.9E+06 | 27.6E+06 |
| | $\sigma_\theta$ * FS/$\sigma_\gamma$ | 0.752 | 0.016 | 0.769 | 0.446 | 0.736 | 0.064 | 0.978 | 0.059 |
| | $\sigma_{\phi\theta}$ | 4110 | 1610 | 6360 | 3910 | 49800 | 3820 | 7390 | 4840 |
| | TEMP (F) | 233 | 322 | 233 | 322 | 233 | 322 | 233 | 322 |
| | $\sigma_\gamma$ (psi) | 23987 | 22107 | 23987 | 22107 | 23987 | 22107 | 23987 | 22107 |
| | E (psi) | 27.5E+06 | 27.0E+06 | 27.5E+06 | 27.0E+06 | 27.5E+06 | 27.0E+06 | 27.5E+06 | 27.0E+06 |
| | $\sigma_{\phi\theta}$ * FS/$\sigma_\gamma$ | 0.343 | 0.146 | 0.355 | 0.237 | 0.415 | 0.346 | 0.413 | 0.293 |
| Plasticity Reduction Factor | $\eta_\phi$ | 0.260 | 1.000 | 0.265 | 1.000 | 0.342 | 0.261 | 0.353 | 0.244 |
| | $\eta_\theta$ | 0.808 | 1.000 | 0.769 | 1.000 | 0.843 | 1.000 | 0.290 | 1.000 |
| | $\eta_{\phi\theta}$ | 1.000 | 1.000 | 1.000 | 1.000 | 1.000 | 1.000 | 1.000 | 1.000 |

5. **Determination of Theoretical Buckling Stress Values ($\sigma_{ie}$).** The buckling stresses given by the following equations correspond to the minimum values determined from theoretical equations for shells with simple support boundary conditions under uniform stress fields. The equations are for unstiffened cylindrical shells.

(a) Axial Compression

$$\sigma_{\phi e} = C_{\phi} Et/R$$

where:

$C_{\phi} = 0.605$ if $M \geq 1.73$

E = Modulus of elasticity at design temperature

Similar to the yield stress of material, the modulus of elasticity is calculated at respective component temperatures using the curve fitted formula based on the material data in Table 2.5 as follows: The data are tabulated in Table 2.15.

$$E = 2.873E+1 - 6.09E\text{-}3*T + 5.20E\text{-}6*T^2 - 8.353e\text{-}9*T^3 \ (\times 10^6 \text{ psi})$$

(b) External Pressure

(i) No End Pressure ($\sigma_{\phi} = 0$)

$$\sigma_{\theta e} = \sigma_{reL} = C_{\theta r} Et/R$$

where:

$$C_{\theta r} = \frac{0.92}{M_{\phi} - 1.17} \quad \text{if } 3.0 \leq M_{\phi} < 1.65\ R/t$$

(ii) End Pressure Included ($\sigma_{\phi} = 0.5\ \sigma_{\theta}$)

$$\sigma_{\theta e} = \sigma_{heL} = C_{\theta h} Et/R$$

where:

$$C_{\theta h} = \frac{0.92}{M_{\phi} - 0.636} \quad \text{if } 3.5 \leq M_{\phi} < 1.65\ R/t$$

(c) Shear

$$\sigma_{\phi\theta eL} = C_{\phi\theta} Et/R$$

where:

$$C_{\phi\theta} = \frac{4.82}{M_{\phi}^2}\left(1 - 0.0239 M_{\phi}^3\right)^{1/2} \quad \text{if } 1.5 \leq M_{\phi} < 26$$

**Table 2.16. Theoretical Buckling Stress (psi)**

| | | Toroid Wall = 0.5 Inch | | | | Toroid Wall = 0.76 Inch | | | |
|---|---|---|---|---|---|---|---|---|---|
| | | Normal | | Accident | | Normal | | Accident | |
| | | Inner | Outer | Inner | Outer | Inner | Outer | Inner | Outer |
| Theoretical Buckling Stresses | $\sigma_{\phi L}$ | 1183600 | 867973 | 1183600 | 867973 | 1183600 | 867973 | 1183600 | 867973 |
| | $\sigma_{re\ L}$ | 129188 | 112211 | 129188 | 112211 | 129188 | 112211 | 129188 | 112211 |
| | $\sigma_{he\ L}$ | 124419 | 107338 | 124419 | 107338 | 124419 | 107338 | 124419 | 107338 |
| | $\sigma_{\phi\theta eL}$ | 377398 | 300133 | 377398 | 300133 | 377398 | 300133 | 377398 | 300133 |

## 6. Interaction Equations and Evaluation for Local Buckling

(a) Elastic Buckling

In the equations which follow, amplified stress components are used and defined as:

$$\sigma_{\phi s} = \frac{\sigma_{\phi} FS}{\alpha_{\phi}};\ \sigma_{\theta s} = \frac{\sigma_{\theta} FS}{\alpha_{\theta}};\ \sigma_{\phi\theta s} = \frac{\sigma_{\phi\theta} FS}{\alpha_{\phi\theta}}$$

These amplified stresses for each condition is tabulated in Table 2.17.

**Table 2.17. Amplified Stress Components**

| | | Toroid Wall = 0.5 Inch | | | | Toroid Wall = 0.76 Inch | | | |
|---|---|---|---|---|---|---|---|---|---|
| | | Normal | | Accident | | Normal | | Accident | |
| | | Inner | Outer | Inner | Outer | Inner | Outer | Inner | Outer |
| Amplified Stress Component | $\sigma_{\phi s}$ | 79567 | 34030 | 82913 | 55576 | 97647 | 81141 | 96515 | 68900 |
| | $\sigma_{\theta s}$ | 20475 | 493 | 20938 | 13802 | 20050 | 1970 | 26633 | 1809 |
| | $\sigma_{\phi\theta s}$ | 10275 | 4025 | 10653 | 6549 | 12450 | 9550 | 12378 | 8107 |

(i) Axial Compression Plus Hoop Compression; required if ($\sigma_{\phi s} < 0.5\ \sigma_{\theta s}$). No check is required if $\sigma_{\theta s} \leq \sigma_{heL}$.

$$\frac{\sigma_{\theta s}}{(\sigma_{reL} - \sigma_{heL})\left(1 - \frac{\sigma_{\theta s}}{0.5\sigma_{heL}}\right) + \sigma_{heL}} < 1.0$$

In review of results given in Table 2.17, for all conditions and both toroid wall thicknesses, $\sigma_{\phi s}$ is not less than 0.5 $\sigma_{\theta s}$. Therefore, calculations under this condition are not required. See Table 2.18 for result.

(ii) Axial Compression Plus Hoop Compression; required if ($\sigma_{\phi s} > 0.5\ \sigma_{\theta s}$) No check is required if $\sigma_{\theta s} < 0\ 5\ \sigma_{heL}$.

$$\frac{\sigma_{\phi s} - 0.5\sigma_{heL}}{\sigma_{\phi eL} - 0.5\sigma_{heL}} + \left(\frac{\sigma_{\phi s}}{\sigma_{heL}}\right)^2 \leq 1.0$$

Comparing results for $\sigma_{\phi s}$ given in Table 2.17 against the tabulated values for $\sigma_{heL}$ given in Table 2.16, shows in all cases for a toroid wall thickness of 0.5 in., $\sigma_{\phi s}$ is greater than 0.5 $\sigma_{heL}$ except the outer wall for normal condition for 0.5 inch wall. Therefore, this check is done for all other conditions to be less than 1 as shown in Table 2. 18.

(iii) Axial Compression Plus Shear

$$\frac{\sigma_{\phi s}}{\sigma_{\phi eL}} + \left(\frac{\sigma_{\phi\theta s}}{\sigma_{\phi\theta eL}}\right)^2 \leq 1.0$$

(iv) Hoop Compression Plus Shear

$$\left(\frac{\sigma_{\theta s}}{\sigma_{reL}}\right) + \left(\frac{\sigma_{\phi\theta s}}{\sigma_{\phi\theta eL}}\right)^2 \leq 1.0$$

(v) Axial Compression Plus Hoop Compression Plus Shear

$$K = 1 - \left(\frac{\sigma_{\phi\theta s}}{\sigma_{\phi\theta eL}}\right)^2$$

In summary, results of this elastic buckling evaluation show that there is no failure when the design uses any toroid wall thickness size from a minimum of 0.5 in. to a maximum of 0.76 in. and all criteria have been satisfied.

**Table 2.18. Elastic Buckling Analysis**

| | | Toroid Wall = 0.5 Inch | | | | Toroid Wall = 0.76 Inch | | | |
|---|---|---|---|---|---|---|---|---|---|
| | | Normal | | Accident | | Normal | | Accident | |
| | | Inner | Outer | Inner | Outer | Inner | Outer | Inner | Outer |
| i) $\sigma_{\phi s} \geq 0.5*\sigma_{\theta s}$? | | Yes | Yes | Yes | Yes | Yes | Yes | Yes | Yes |
| $\sigma_{\theta s} \leq \sigma_{heL}$? | | Yes | Yes | Yes | Yes | Yes | Yes | Yes | Yes |
| ii) $\sigma_{\phi s} <= 0.5*\sigma_{heL}$? | | No | Yes | No | No | No | No | No | No |
| Criteria ≤ 1.0 | | 0.015 | 0.000 | 0.018 | 0.002 | 0.032 | 0.034 | 0.031 | 0.019 |
| iii) Axial + Shear | Criteria ≤ 1.0 | 0.070 | 0.039 | 0.073 | 0.066 | 0.085 | 0.094 | 0.087 | 0.079 |
| iv) Hoop + Shear | Criteria ≤ 1.0 | 0.159 | 0.005 | 0.163 | 0.123 | 0.156 | 0.019 | 0.207 | 0.017 |
| v) Ax + Hp + Sh | K = 1.00 | 1.00 | 1.00 | 1.00 | 1.00 | 1.00 | 1.00 | 1.00 | 1.00 |

(b) Inelastic Buckling

The inelastic buckling relationships must be satisfied when any of the values of $\eta_i < 1$. In the equations which follow, amplified stress components are used and defined as:

$$\sigma_{\phi p} = \frac{\sigma_{\phi s}}{\eta_\phi};\ \sigma_{\theta s} = \frac{\sigma_{\theta s}}{\eta_\theta};\ \sigma_{\phi\theta} = \frac{\sigma_{\phi\theta}}{\eta_{\phi\theta}}$$

From Table 2.15, for types of toroids, only $\eta_\phi$ and $\eta_\theta$ are less than 1.0 for the normal and accident condition on the inner shell. Their amplified stress components are calculated and tabulated in Table 2.19. Other components of stresses are not entered in the table. The following criteria are checked for these stresses and results are also tabulated in Table 2.19.

(i) Axial Compression Plus Shear

$$\left(\frac{\sigma_{\phi p}}{\sigma_{\phi eL}}\right)^2 + \left(\frac{\sigma_{\phi\theta p}}{\sigma_{\phi\theta eL}}\right)^2 \leq 1.0$$

(ii) Hoop Compression Plus Shear

$$\left(\frac{\sigma_{\phi p}}{\sigma_{reL}}\right)^2 + \left(\frac{\sigma_{\phi\theta p}}{\sigma_{\phi\theta eL}}\right)^2 \leq 1.0$$

In summary, results of this inelastic buckling evaluation show that there is no failure for a toroid wall thickness of 0.50 in. minimum to 0.76 in. maximum and all criteria have been satisfied.

**Table 2.19. Inelastic Buckling Analysis**

| | | Toroid Wall = 0.5 Inch | | | | Toroid Wall = 0.76 Inch | | | |
|---|---|---|---|---|---|---|---|---|---|
| | | Normal | | Accident | | Normal | | Accident | |
| | | Inner | Outer | Inner | Outer | Inner | Outer | Inner | Outer |
| Amplified Stress Components (psi) | $\sigma_{\phi p}$ | 31603 | – | 48229 | – | 29571 | 29222 | 42237 | 39552 |
| | $\sigma_{\theta s}$ | 10139 | – | 16258 | – | 9508 | – | 54865 | – |
| | $\sigma_{\phi\theta}$ | – | – | – | – | – | – | – | – |
| i) Axial + Shear | Criterion ≤ 1.00 | 0.0007 | – | 0.0017 | – | 0.0006 | 0.0011 | 0.0013 | 0.0021 |
| ii) Hoop + Shear | Criterion ≤ 1.00 | 0.0062 | – | 0.0158 | – | 0.0054 | – | 0.1804 | – |

### 2.11.3 Tabulation of Stresses for Individual Load Cases and Summary of Load Combinations Under Normal and Accident Conditions of Transport

In this subsection the resulting stresses from the finite element analyses for each load condition and load combination at each stress point are tabulated. Figure 2.43 shows the location of each stress point within the cask model. These stress points are selected because they are points of maximum stresses identified by the load condition analyses and provide a map of the cask state of stress in the radial and longitudinal directions. These stress points are labeled 1 through 27. Stress points 7 through 16 are located on the inner and outer shells of the cask. These shell stress points are further subdivided in "a" and "b". The subdivisions "a" and "b" are located in the inside and outside surfaces of each shell element. These surface stress values given at points "a" and "b" represent an average stress over the surface of the element that they applied. The tabulations of principal stresses and stress intensities (primary membrane and primary membrane plus primary bending) for each individual normal and accident condition loading (e.g., pressure, hot and cold temperatures, vibration, impact, etc.) are given in Tables 2.20 through 2.31.

A summary of the load combinations for normal and hypothetical accident conditions of transport required by Regulatory Guide 7.8 [2.8] is shown in Table 2.32. A combination index used to identify each required combination is given in this table. The stress intensities, categorized as specified in Regulatory Guide 7.6 [2.4], for each required stress combination at each point are given in Tables 2.33 through 2.106. Combinations for normal conditions of transport are found in Tables 2.33 through 2.69, and those for accident conditions are found in Tables 2.70 through 2.106. In each of these tables, the maximum stress intensity value found for each stress intensity category is given in the last line of the table. There are two sets of tables given for the drop conditions, under normal and accident environment for both principal stresses and stress intensity and summary of load combinations categories. Tables 2.33 through 2.106 are for 0.76 in. wall toroid while Tables 2.107 through 2.180 are for a 0.50 in. toroid. Comparison of these values against the allowable given in the notes of each table explicitly show that the Model 2000 design meets all the criteria required by Regulatory Guide 7.6 [2.4].

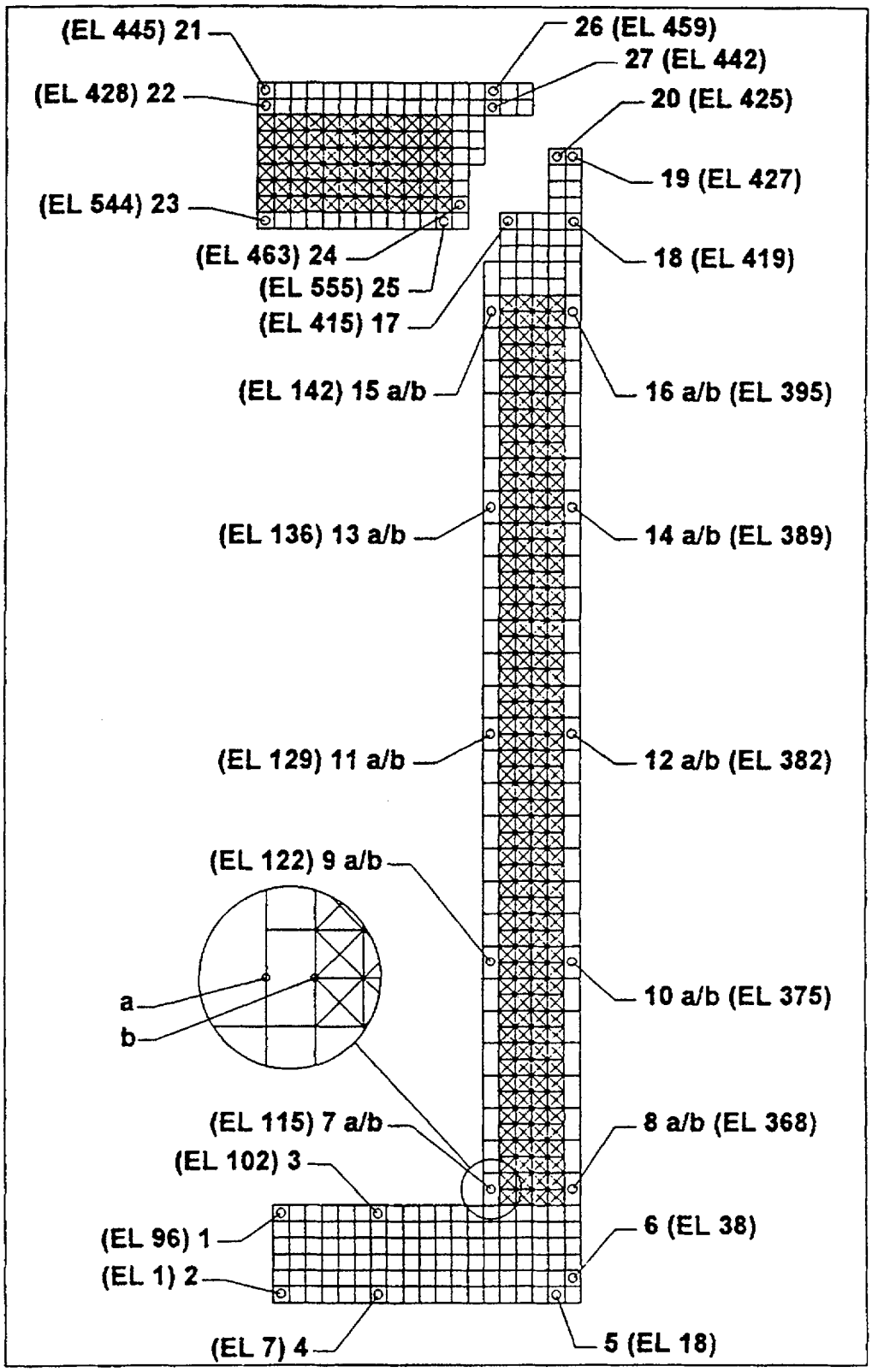


**Figure 2.43. Stress Point Locations With Element Numbers**

**Table 2.20. 100 Degrees F Ambient With Decay Heat**

| Location | EL # | Description | Stress (psi) | | | Stress Intensity |
|---|---|---|---|---|---|---|
| | | | Sigma 1 | Sigma 2 | Sigma 3 | Q |
| | | Bottom Forging, Center | | | | |
| 1 | 96 | Cavity Surface | –4.73E+00 | –1.17E+03 | –1.14E+03 | 1.17E+03 |
| 2 | 1 | Outside Surface | 7.32E+02 | 6.89E+01 | 7.42E+02 | 6.73E+02 |
| | | Bottom Forging, Midsection | | | | |
| 3 | 102 | Cavity Surface | 1.02E+01 | –9.37E+02 | –9.11E+02 | 9.47E+02 |
| 4 | 7 | Outside Surface | 7.17E+02 | 9.73E+01 | 8.60E+02 | 7.63E+02 |
| | | Bottom Forging, Corner | | | | |
| 5 | 18 | Bottom Surface | 8.13E+02 | 1.75E+02 | 2.38E+03 | 2.21E+03 |
| 6 | 38 | Outer Surface | 6.50E+02 | –1.63E+02 | 7.81E+03 | 1.97E+03 |
| | | Cask Wall Shells | | | | |
| 7a | 115 | Inner Shell | –8.90E+03 | –2.86E+04 | –1.62E+04 | 1.97E+04 |
| 7b | | | 1.58E+04 | 8.99E+03 | 2.92E+03 | 1.29E+04 |
| 8a | 368 | Outer Shell | 2.14E+04 | 1.65E+04 | 1.23E+04 | 9.13E+03 |
| 8b | | | –6.98E+03 | –2.34E+04 | –8.34E+03 | 1.64E+04 |
| 9a | 122 | Inner Shell | –3.54E+01 | –3.90E+03 | –1.03E+04 | 1.03E+04 |
| 9b | | | –3.92E+02 | –3.11E+03 | –9.13E+03 | 8.74E+03 |
| 10a | 375 | Outer Shell | 5.76E+03 | –4.00E+02 | 1.06E+04 | 1.10E+04 |
| 10b | | | 4.41E+03 | –5.12E+01 | 9.71E+03 | 9.76E+03 |
| 11a | 129 | Inner Shell | –2.05E+01 | –3.99E+03 | –9.94E+03 | 9.92E+03 |
| 11b | | | –5.02E+02 | –3.00E+03 | –8.81E+03 | 8.31E+03 |
| 12a | 382 | Outer Shell | 4.49E+03 | –5.35E+02 | 1.04E+04 | 1.09E+04 |
| 12b | | | 5.65E+03 | 2.04E+01 | 1.03E+04 | 1.03E+04 |
| 13a | 136 | Inner Shell | –1.40E+01 | –3.80E+03 | –1.03E+04 | 1.02E+04 |
| 13b | | | –5.52E+02 | –3.19E+03 | –9.22E+03 | 8.66E+03 |
| 14a | 389 | Outer Shell | 4.70E+03 | –5.96E+02 | 1.08E+04 | 1.14E+04 |
| 14b | | | 5.45E+03 | 1.73E+01 | 1.06E+04 | 1.06E+04 |
| 15a | 142 | Inner Shell | 1.49E+03 | –5.80E+03 | –4.69E+03 | 7.29E+03 |
| 15b | | | –1.95E+03 | –3.35E+03 | –4.81E+03 | 2.86E+03 |
| 16a | 395 | Outer Shell | 1.23E+04 | –3.78E+03 | 4.74E+03 | 1.61E+04 |
| 16b | | | 1.62E+03 | –7.91E+02 | 2.29E+03 | 3.09E+03 |
| | | Top Forging | | | | |
| 17 | 415 | Inner Surface | 1.95E+03 | 4.23E+02 | 1.49E+03 | 1.53E+03 |
| 18 | 419 | Outer Surface | 5.04E+02 | –2.35E+02 | 1.52E+03 | 1.76E+03 |
| 19 | 427 | Top Outer Element | 1.51E+02 | –1.31E+02 | 3.03E+03 | 3.16E+03 |
| 20 | 426 | Top Inner Element | 1.42E+02 | –1.53E+02 | 3.16E+03 | 3.31E+03 |
| | | Lid, Center | | | | |
| 21 | 445 | Top Flange, Top EL. | 1.98E+03 | 3.97E+01 | 1.97E+03 | 1.94E+03 |
| 22 | 428 | Top Flange, Bottom EL. | 4.14E+02 | –3.99E+01 | 1.75E+02 | 4.53E+02 |
| 23 | 544 | Bottom Flange EL. | 1.14E+02 | –1.31E+03 | –1.29E+03 | 1.43E+03 |
| | | Lid, Inner Lower Corner | | | | |
| 24 | 463 | Cyl. Shell | 4.06E+03 | –5.02E+02 | 4.04E+02 | 4.56E+03 |
| 25 | 555 | BTM Flange | 2.77E+03 | –3.25E+03 | –9.97E+02 | 6.01E+03 |
| | | Lid, Upper Flange (Seal Area) | | | | |
| 26 | 459 | TOP EL. | –1.05E+02 | –9.94E+02 | 1.33E+03 | 2.32E+03 |
| 27 | 442 | BTM EL. | –2.14E+02 | –1.36E+03 | 9.05E+02 | 2.26E+03 |

NOTES:

1. Refer to Reference [2.2], corresponding Table 2.10.9.1.
2. Stresses at locations 1 through 6 and 17 through 27 are given at the centroid of the element, therefore, the same stress value is used for $P_m$ and $P_m + P_b$.
3. a = smaller radius surface
   b = larger radius surface
4. Prefabrication stresses are included in the inner shell stress. See Table 2.7 for values.

**Table 2.21. 100 Degrees F Ambient With Decay Heat Plus Solar**

| Location | EL # | Description | Stress (psi) | | | Stress Intensity |
|---|---|---|---|---|---|---|
| | | | Sigma 1 | Sigma 2 | Sigma 3 | Q |
| | | Bottom Forging, Center | | | | |
| 1 | 96 | Cavity Surface | –5.04E+00 | –1.12E+03 | –1.09E+03 | 1.11E+03 |
| 2 | 1 | Outside Surface | 9.28E+02 | 8.41E+01 | 9.29E+02 | 8.45E+02 |
| | | Bottom Forging, Midsection | | | | |
| 3 | 102 | Cavity Surface | 1.30E+01 | –8.59E+02 | –8.84E+02 | 8.97E+02 |
| 4 | 7 | Outside Surface | 8.67E+02 | 1.58E+02 | 1.01E+03 | 8.52E+02 |
| | | Bottom Forging, Corner | | | | |
| 5 | 18 | Bottom Surface | 7.90E+02 | 1.89E+02 | 2.31E+03 | 2.12E+03 |
| 6 | 38 | Outer Surface | 6.47E+02 | –1.68E+02 | 1.72E+03 | 1.89E+03 |
| | | Cask Wall Shells | | | | |
| 7a | 115 | Inner Shell | –9.44E+03 | –3.13E+04 | –1.71E+04 | 2.19E+04 |
| 7b | | | 1.83E+04 | 1.01E+04 | 4.05E+03 | 1.43E+04 |
| 8a | 368 | Outer Shell | 2.23E+04 | 1.88E+04 | 1.27E+04 | 9.59E+03 |
| 8b | | | –7.37E+03 | –2.71E+04 | –1.00E+04 | 1.97E+04 |
| 9a | 122 | Inner Shell | –8.91E+01 | –3.38E+03 | –1.04E+04 | 1.04E+04 |
| 9b | | | –6.20E+02 | –3.39E+03 | –9.56E+03 | 8.94E+03 |
| 10a | 375 | Outer Shell | 3.46E+03 | –7.23E+02 | 1.04E+04 | 1.11E+04 |
| 10b | | | 5.97E+03 | 6.09E+01 | 1.07E+04 | 1.07E+04 |
| 11a | 129 | Inner Shell | –3.29E+01 | –4.25E+03 | –9.55E+03 | 9.52E+03 |
| 11b | | | –4.49E+02 | –2.54E+03 | –8.22E+03 | 7.77E+03 |
| 12a | 382 | Outer Shell | 4.60E+03 | –5.90E+02 | 9.81E+03 | 1.04E+04 |
| 12b | | | 4.82E+03 | 3.83E+01 | 9.53E+03 | 9.49E+03 |
| 13a | 136 | Inner Shell | –4.24E+00 | –3.47E+03 | –1.08E+04 | 1.08E+04 |
| 13b | | | –6.07E+02 | –3.30E+03 | –9.88E+03 | 9.28E+03 |
| 14a | 389 | Outer Shell | 3.83E+03 | –5.76E+02 | 1.10E+04 | 1.16E+04 |
| 14b | | | 5.58E+03 | 6.57E+00 | 1.11E+04 | 1.10E+04 |
| 15a | 142 | Inner Shell | 1.83E+03 | –5.05E+03 | –4.35E+03 | 6.87E+03 |
| 15b | | | –1.76E+03 | –4.38E+03 | –5.03E+03 | 3.27E+03 |
| 16a | 395 | Outer Shell | 1.16E+04 | –4.83E+03 | 3.82E+03 | 1.64E+04 |
| 16b | | | 1.78E+03 | –5.57E+02 | 2.04E+03 | 2.59E+03 |
| | | Top Forging | | | | |
| 17 | 415 | Inner Surface | 2.09E+03 | 4.35E+02 | 1.36E+03 | 1.66E+03 |
| 18 | 419 | Outer Surface | 5.23E+02 | –2.86E+02 | 1.34E+03 | 1.63E+03 |
| 19 | 427 | Top Outer Element | 1.33E+02 | –1.17E+02 | 2.76E+03 | 2.88E+03 |
| 20 | 426 | Top Inner Element | 1.29E+02 | –1.37E+02 | 2.86E+03 | 3.00E+03 |
| | | Lid, Center | | | | |
| 21 | 445 | Top Flange, Top EL. | 1.90E+03 | 3.24E+01 | 1.90E+03 | 1.87E+03 |
| 22 | 428 | Top Flange, Bottom EL. | 3.31E+02 | –2.24E+02 | –9.67E+01 | 5.55E+02 |
| 23 | 544 | Bottom Flange EL. | 1.26E+02 | –1.30E+03 | –1.27E+03 | 1.42E+03 |
| | | Lid, Inner Lower Corner | | | | |
| 24 | 463 | Cyl. Shell | 3.79E+03 | –5.67E+02 | 3.24E+02 | 4.36E+03 |
| 25 | 555 | BTM Flange | 2.69E+03 | –3.00E+03 | –8.87E+02 | 5.69E+03 |
| | | Lid, Upper Flange (Seal Area) | | | | |
| 26 | 459 | TOP EL. | –1.15E+02 | –8.30E+02 | 1.26E+03 | 2.09E+03 |
| 27 | 442 | BTM EL. | –2.10E+02 | –1.45E+03 | 7.63E+02 | 2.21E+03 |

NOTES:

1. Refer to Reference [2.2], corresponding Table 2.10.9.2.
2. Stresses at locations 1 through 6 and 17 through 27 are given at the centroid of the element, therefore, the same stress value is used for $P_m$ and $P_m + P_b$.
3. a = smaller radius surface
   b = larger radius surface
4. Prefabrication stresses are included in the inner shell stress. See Table 2.7 for values.

## Table 2.22. -20 Degrees F Ambient With Decay Heat

| Location | EL # | Description | Stress (psi) | | | Stress Intensity |
|---|---|---|---|---|---|---|
| | | | Sigma 1 | Sigma 2 | Sigma 3 | Q |
| | | Bottom Forging, Center | | | | |
| 1 | 96 | Cavity Surface | –3.52E+00 | –1.30E+03 | –1.27E+03 | 1.29E+03 |
| 2 | 1 | Outside Surface | 7.03E+02 | 3.54E+01 | 7.08E+02 | 6.73E+02 |
| | | Bottom Forging, Midsection | | | | |
| 3 | 102 | Cavity Surface | 8.82E+00 | –1.11E+03 | –1.07E+03 | 1.12E+03 |
| 4 | 7 | Outside Surface | 7.05E+02 | 1.28E+02 | 8.65E+02 | 7.37E+02 |
| | | Bottom Forging, Corner | | | | |
| 5 | 18 | Bottom Surface | 4.85E+02 | 1.03E+02 | 2.32E+03 | 2.21E+03 |
| 6 | 38 | Outer Surface | 2.68E+02 | –3.48E+02 | 1.68E+03 | 2.03E+03 |
| | | Cask Wall Shells | | | | |
| 7a | 115 | Inner Shell | –2.50E+03 | –1.91E+04 | –9.07E+03 | 1.66E+04 |
| 7b | | | 8.74E+03 | –2.55E+03 | –4.11E+02 | 1.13E+04 |
| 8a | 368 | Outer Shell | 7.83E+03 | 6.51E+03 | 4.15E+03 | 3.67E+03 |
| 8b | | | 2.36E+02 | –1.18E+04 | –3.54E+03 | 1.20E+04 |
| 9a | 122 | Inner Shell | –9.96E+00 | –7.03E+03 | –1.54E+03 | 7.02E+03 |
| 9b | | | 1.44E+02 | –5.98E+03 | –9.67E+02 | 6.12E+03 |
| 10a | 375 | Outer Shell | 1.68E+03 | –4.41E+00 | –1.16E+02 | 1.80E+03 |
| 10b | | | 2.05E+03 | 3.57E+01 | 1.38E+02 | 2.04E+03 |
| 11a | 129 | Inner Shell | –1.79E+01 | –6.64E+03 | –1.66E+03 | 6.62E+03 |
| 11b | | | 1.33E+02 | –6.35E+03 | –1.29E+03 | 6.48E+03 |
| 12a | 382 | Outer Shell | 1.66E+03 | 1.90E+00 | –1.36E+02 | 1.80E+03 |
| 12b | | | 2.07E+03 | –3.59E+00 | 1.35E+02 | 2.07E+03 |
| 13a | 136 | Inner Shell | –1.58E+01 | –6.88E+03 | –1.64E+03 | 6.86E+03 |
| 13b | | | –1.34E+01 | –6.12E+03 | –1.17E+03 | 6.11E+03 |
| 14a | 389 | Outer Shell | 1.75E+03 | –2.90E+00 | –1.39E+02 | 1.89E+03 |
| 14b | | | 1.98E+03 | –8.42E+01 | 7.53E+01 | 1.98E+03 |
| 15a | 142 | Inner Shell | 1.71E+03 | –3.87E+03 | –2.57E+03 | 5.59E+03 |
| 15b | | | –1.15E+03 | –1.05E+04 | –5.30E+03 | 9.33E+03 |
| 16a | 395 | Outer Shell | 1.82E+03 | –3.47E+03 | –7.08E+02 | 5.29E+03 |
| 16b | | | 2.60E+03 | 1.99E+03 | 1.26E+03 | 1.34E+03 |
| | | Top Forging | | | | |
| 17 | 415 | Inner Surface | 1.02E+03 | 8.71E+01 | 8.31E+02 | 9.36E+02 |
| 18 | 419 | Outer Surface | 5.82E+02 | –1.46E+02 | 1.43E+03 | 1.58E+03 |
| 19 | 427 | Top Outer Element | 1.63E+02 | –1.40E+02 | 3.21E+03 | 3.35E+03 |
| 20 | 426 | Top Inner Element | 1.54E+02 | –1.73E+02 | 3.34E+03 | 3.51E+03 |
| | | Lid, Center | | | | |
| 21 | 445 | Top Flange, Top EL. | 4.69E+02 | 3.91E+01 | 4.45E+02 | 4.30E+02 |
| 22 | 428 | Top Flange, Bottom EL. | 2.65E+02 | 1.24E+02 | 2.71E+02 | 1.47E+02 |
| 23 | 544 | Bottom Flange EL. | 5.93E+02 | 2.02E+01 | 5.98E+02 | 5.78E+02 |
| | | Lid, Inner Lower Corner | | | | |
| 24 | 463 | Cyl. Shell | 3.21E+03 | –2.30E+02 | 2.97E+02 | 3.44E+03 |
| 25 | 555 | BTM Flange | 2.87E+03 | –1.36E+03 | 8.92E+02 | 4.23E+03 |
| | | Lid, Upper Flange (Seal Area) | | | | |
| 26 | 459 | TOP EL. | –6.96E+01 | –9.15E+02 | 1.03E+03 | 1.95E+03 |
| 27 | 442 | BTM EL. | –2.07E+02 | –1.02E+03 | 6.61E+02 | 1.68E+03 |

NOTES:

1. Refer to Reference [2.2], corresponding Table 2.10.9.3.
2. Stresses at locations 1 through 6 and 17 through 27 are given at the centroid of the element, therefore, the same stress value is used for $P_m$ and $P_m + P_b$.
3. a = smaller radius surface
   b = larger radius surface
4. Prefabrication stresses are included in the inner shell stress. See Table 2.7 for values.

## Table 2.23. -40 Degrees F Ambient With Decay Heat

| Location | EL # | Description | Stress (psi) | | | Stress Intensity |
|---|---|---|---|---|---|---|
| | | | Sigma 1 | Sigma 2 | Sigma 3 | Q |
| | | Bottom Forging, Center | | | | |
| 1 | 96 | Cavity Surface | –5.06E+00 | –1.32E+03 | –1.29E+03 | 1.31E+03 |
| 2 | 1 | Outside Surface | 6.92E+02 | 3.40E+01 | 6.96E+02 | 6.62E+02 |
| | | Bottom Forging, Midsection | | | | |
| 3 | 102 | Cavity Surface | 6.99E+00 | –1.14E+03 | –1.09E+03 | 1.15E+03 |
| 4 | 7 | Outside Surface | 7.03E+02 | 1.17E+02 | 8.63E+02 | 7.46E+02 |
| | | Bottom Forging, Corner | | | | |
| 5 | 18 | Bottom Surface | 4.62E+02 | 8.58E+01 | 2.33E+03 | 2.24E+03 |
| 6 | 38 | Outer Surface | 2.31E+02 | –3.85E+02 | 1.68E+03 | 2.06E+03 |
| | | Cask Wall Shells | | | | |
| 7a | 115 | Inner Shell | –2.25E+03 | –1.73E+04 | –8.67E+03 | 1.51E+04 |
| 7b | | | 7.82E+03 | –3.20E+03 | –1.09E+03 | 1.10E+04 |
| 8a | 368 | Outer Shell | 7.00E+03 | 5.98E+03 | 3.86E+03 | 3.14E+03 |
| 8b | | | 5.27E+02 | –1.05E+04 | –2.97E+03 | 1.10E+04 |
| 9a | 122 | Inner Shell | –4.79E+01 | –6.59E+03 | –1.22E+03 | 6.54E+03 |
| 9b | | | 5.06E+01 | –6.11E+03 | –8.79E+02 | 6.16E+03 |
| 10a | 375 | Outer Shell | 1.75E+03 | 1.11E+00 | –1.17E+02 | 1.86E+03 |
| 10b | | | 2.10E+03 | –4.63E+00 | 1.32E+02 | 2.11E+03 |
| 11a | 129 | Inner Shell | –2.14E+00 | –6.54E+03 | –2.00E+03 | 6.54E+03 |
| 11b | | | 2.87E+01 | –6.14E+03 | –1.61E+03 | 6.17E+03 |
| 12a | 382 | Outer Shell | 1.72E+03 | 2.30E+00 | –1.40E+02 | 1.86E+03 |
| 12b | | | 2.13E+03 | –4.71E+00 | 1.34E+02 | 2.13E+03 |
| 13a | 136 | Inner Shell | 1.79E+00 | –6.61E+03 | –1.45E+03 | 6.61E+03 |
| 13b | | | 6.20E+01 | –6.07E+03 | –1.06E+03 | 6.13E+03 |
| 14a | 389 | Outer Shell | 1.83E+03 | –2.90E+00 | –1.35E+02 | 1.96E+03 |
| 14b | | | 2.02E+03 | –3.54E+01 | 7.08E+01 | 2.02E+03 |
| 15a | 142 | Inner Shell | 2.20E+03 | –3.59E+03 | –2.50E+03 | 5.79E+03 |
| 15b | | | –1.94E+03 | –1.07E+04 | –5.78E+03 | 8.73E+03 |
| 16a | 395 | Outer Shell | 1.82E+03 | –3.16E+03 | –6.02E+02 | 4.98E+03 |
| 16b | | | 2.56E+03 | 1.90E+03 | 1.24E+03 | 1.32E+03 |
| | | Top Forging | | | | |
| 17 | 415 | Inner Surface | 9.91E+02 | 6.29E+01 | 8.10E+02 | 9.28E+02 |
| 18 | 419 | Outer Surface | 5.97E+02 | –1.32E+02 | 1.47E+03 | 1.60E+03 |
| 19 | 427 | Top Outer Element | 1.66E+02 | –1.41E+02 | 3.29E+03 | 3.43E+03 |
| 20 | 426 | Top Inner Element | 1.55E+02 | –1.75E+02 | 3.43E+03 | 3.60E+03 |
| | | Lid, Center | | | | |
| 21 | 445 | Top Flange, Top EL. | 5.66E+02 | 3.74E+01 | 5.51E+02 | 5.29E+02 |
| 22 | 428 | Top Flange, Bottom EL. | 1.69E+02 | 8.37E+01 | 1.41E+02 | 8.56E+01 |
| 23 | 544 | Bottom Flange EL. | 7.02E+02 | 6.23E+01 | 7.17E+02 | 6.55E+02 |
| | | Lid, Inner Lower Corner | | | | |
| 24 | 463 | Cyl. Shell | 3.22E+03 | –5.08E+02 | 1.75E+02 | 3.73E+03 |
| 25 | 555 | BTM Flange | 2.96E+03 | –1.36E+03 | 9.93E+02 | 4.31E+03 |
| | | Lid, Upper Flange (Seal Area) | | | | |
| 26 | 459 | TOP EL. | –6.95E+01 | –9.45E+02 | 1.03E+03 | 1.98E+03 |
| 27 | 442 | BTM EL. | –2.25E+02 | –9.58E+02 | 6.69E+02 | 1.63E+03 |

NOTES:

1. Refer to Reference [2.2], corresponding Table 2.10.9.4.
2. Stresses at locations 1 through 6 and 17 through 27 are given at the centroid of the element, therefore, the same stress value is used for $P_m$ and $P_m + P_b$.
3. a = smaller radius surface
   b = larger radius surface
4. Prefabrication stresses are included in the inner shell stress. See Table 2.7 for values.

## Table 2.24. -20 Degrees F Ambient

| Location | EL # | Description | Stress (psi) Sigma 1 | Sigma 2 | Sigma 3 | Stress Intensity Q |
|---|---|---|---|---|---|---|
| | | Bottom Forging, Center | | | | |
| 1 | 96 | Cavity Surface | –6.84E–01 | –8.44E+01 | –8.38E+01 | 8.37E+01 |
| 2 | 1 | Outside Surface | –2.88E+01 | –9.96E+01 | –1.00E+0 | 7.16E+01 |
| | | Bottom Forging, Midsection | | | | |
| 3 | 102 | Cavity Surface | –2.27E+00 | –1.53E+02 | –1.20E+02 | 1.50E+02 |
| 4 | 7 | Outside Surface | –4.56E+01 | –1.05E+02 | –8.51E+01 | 5.96E+01 |
| | | Bottom Forging, Corner | | | | |
| 5 | 18 | Bottom Surface | 2.05E+01 | 1.06E+01 | –6.91E+00 | 2.74E+01 |
| 6 | 38 | Outer Surface | 2.20E+01 | –3.84E–01 | –7.16E+00 | 2.91E+01 |
| | | Cask Wall Shells | | | | |
| 7a | 115 | Inner Shell | 9.55E+03 | –2.54E+03 | 6.22E+02 | 1.21E+04 |
| 7b | | | –3.86E+03 | –1.01E+04 | –5.58E+03 | 6.19E+03 |
| 8a | 368 | Outer Shell | –3.63E+03 | –5.74E+03 | –2.49E+03 | 3.25E+03 |
| 8b | | | 9.24E+03 | 1.37E+03 | 3.50E+03 | 7.87E+03 |
| 9a | 122 | Inner Shell | –2.84E+00 | –4.20E+03 | –4.32E+03 | 4.31E+03 |
| 9b | | | –1.06E+02 | –4.31E+03 | –4.22E+03 | 4.21E+03 |
| 10a | 375 | Outer Shell | 2.37E+02 | 1.28E+00 | –2.00E+01 | 2.57E+02 |
| 10b | | | 2.10E+02 | –4.93E–02 | –2.67E+01 | 2.37E+02 |
| 11a | 129 | Inner Shell | –6.16E+00 | –4.09E+03 | –4.26E+03 | 4.25E+03 |
| 11b | | | –1.15E+02 | –4.42E+03 | –4.24E+03 | 4.31E+03 |
| 12a | 382 | Outer Shell | 2.24E+02 | 1.32E–03 | 5.33E–01 | 2.24E+02 |
| 12b | | | 2.23E+02 | 3.25E–03 | 2.03E–01 | 2.23E+02 |
| 13a | 136 | Inner Shell | –6.98E+00 | –3.99E+03 | –4.26E+03 | 4.25E+03 |
| 13b | | | –1.11E+02 | –4.53E+03 | –4.29E+03 | 4.42E+03 |
| 14a | 389 | Outer Shell | 2.29E+02 | 1.29E+00 | –3.75E+00 | 2.33E+02 |
| 14b | | | 2.18E+02 | –2.53E–01 | –7.12E+00 | 2.25E+02 |
| 15a | 142 | Inner Shell | –5.41E+02 | –5.85E+03 | –3.94E+03 | 5.31E+03 |
| 15b | | | 1.30E+03 | –3.60E+03 | –2.65E+03 | 4.89E+03 |
| 16a | 395 | Outer Shell | 2.45E+03 | –1.58E+02 | 7.95E+02 | 2.60E+03 |
| 16b | | | 6.28E+01 | –1.37E+03 | –2.83E+02 | 1.43E+03 |
| | | Top Forging | | | | |
| 17 | 415 | Inner Surface | –1.90E+02 | –5.32E+02 | –3.04E+02 | 3.42E+02 |
| 18 | 419 | Outer Surface | 1.34E+02 | 3.11E+01 | –2.28E+01 | 1.57E+02 |
| 19 | 427 | Top Outer Element | 5.10E+00 | –3.75E+00 | –3.78E+01 | 4.29E+01 |
| 20 | 426 | Top Inner Element | 7.29E–01 | –6.51E+00 | –4.27E+01 | 4.34E+01 |
| | | Lid, Center | | | | |
| 21 | 445 | Top Flange, Top EL. | –2.90E+01 | –5.71E+02 | –5.37E+02 | 5.42E+02 |
| 22 | 428 | Top Flange, Bottom EL. | –1.16E+02 | –8.95E+02 | –9.19E+02 | 8.03E+02 |
| 23 | 544 | Bottom Flange EL. | –6.46E+01 | –1.80E+03 | –1.79E+03 | 1.73E+03 |
| | | Lid, Inner Lower Corner | | | | |
| 24 | 463 | Cyl. Shell | –2.13E+02 | –3.51E+03 | –1.82E+03 | 3.30E+03 |
| 25 | 555 | BTM Flange | 9.65E+02 | –3.33E+03 | –1.97E+03 | 4.30E+03 |
| | | Lid, Upper Flange (Seal Area) | | | | |
| 26 | 459 | TOP EL. | 8.48E+02 | –2.88E+01 | –7.48E+01 | 9.22E+02 |
| 27 | 442 | BTM EL. | 5.17E+02 | –4.31E+01 | –1.32E+02 | 6.49E+02 |

NOTES:

1. Refer to Reference [2.2], corresponding Table 2.10.9.5.
2. Stresses at locations 1 through 6 and 17 through 27 are given at the centroid of the element, therefore, the same stress value is used for $P_m$ and $P_m + P_b$.
3. a = smaller radius surface
   b = larger radius surface
4. Prefabrication stresses are not included in the inner shell stress. See Table 2.7 for values.

## Table 2.25. -40 Degrees F Ambient

| Location | EL # | Description | Stress (psi) Sigma 1 | Sigma 2 | Sigma 3 | Stress Intensity Q |
|---|---|---|---|---|---|---|
| | | Bottom Forging, Center | | | | |
| 1 | 96 | Cavity Surface | –9.23E–01 | –1.02E+02 | –1.01E+02 | 1.01E+02 |
| 2 | 1 | Outside Surface | –3.87E+01 | –1.22E+02 | –1.23E+02 | 8.38E+01 |
| | | Bottom Forging, Midsection | | | | |
| 3 | 102 | Cavity Surface | –2.81E+00 | –1.93E+02 | –1.49E+02 | 1.90E+02 |
| 4 | 7 | Outside Surface | –4.95E+01 | –1.40E+02 | –1.02E+02 | 9.05E+01 |
| | | Bottom Forging, Corner | | | | |
| 5 | 18 | Bottom Surface | 7.13E+00 | –1.31E+01 | –2.47E+01 | 3.19E+01 |
| 6 | 38 | Outer Surface | 6.11E+00 | –7.10E+01 | –3.70E+01 | 7.71E+01 |
| | | Cask Wall Shells | | | | |
| 7a | 115 | Inner Shell | 1.18E+04 | –2.02E+03 | 1.13E+03 | 1.39E+04 |
| 7b | | | –4.77E+03 | –1.13E+04 | –6.55E+03 | 6.54E+03 |
| 8a | 368 | Outer Shell | –4.60E+03 | –7.09E+03 | –3.03E+03 | 4.06E+03 |
| 8b | | | 1.14E+04 | 1.73E+03 | 4.39E+03 | 9.62E+03 |
| 9a | 122 | Inner Shell | –5.94E+00 | –4.13E+03 | –4.03E+03 | 4.12E+03 |
| 9b | | | –8.61E+01 | –3.93E+03 | –3.88E+03 | 3.84E+03 |
| 10a | 375 | Outer Shell | 2.44E+02 | 1.55E+00 | –2.61E+01 | 2.70E+02 |
| 10b | | | 2.13E+02 | –7.10E–02 | –3.38E+01 | 2.47E+02 |
| 11a | 129 | Inner Shell | –1.02E+01 | –4.08E+03 | –3.93E+03 | 4.07E+03 |
| 11b | | | –1.02E+00 | –4.02E+03 | –3.79E+03 | 4.02E+03 |
| 12a | 382 | Outer Shell | 2.29E+02 | 1.76E–03 | 7.50E–01 | 2.29E+02 |
| 12b | | | 2.28E+02 | 4.52E–03 | 2.65E–01 | 2.28E+02 |
| 13a | 136 | Inner Shell | –1.32E+01 | –3.97E+03 | –4.04E+03 | 4.03E+03 |
| 13b | | | –7.83E+01 | –4.07E+03 | –3.97E+03 | 4.00E+03 |
| 14a | 389 | Outer Shell | 2.37E+02 | 1.55E+00 | –8.86E+00 | 2.46E+02 |
| 14b | | | 2.20E+02 | –3.04E–01 | –1.37E+01 | 2.34E+02 |
| 15a | 142 | Inner Shell | –7.28E+02 | –6.10E+03 | –4.18E+03 | 5.37E+03 |
| 15b | | | 1.90E+03 | –3.01E+03 | –2.40E+03 | 4.91E+03 |
| 16a | 395 | Outer Shell | 2.88E+03 | –3.31E+02 | 1.06E+03 | 3.21E+03 |
| 16b | | | 1.70E+02 | –1.62E+03 | –1.50E+02 | 1.79E+03 |
| | | Top Forging | | | | |
| 17 | 415 | Inner Surface | –1.50E+02 | –5.88E+02 | –2.12E+02 | 4.38E+02 |
| 18 | 419 | Outer Surface | 1.57E+02 | 3.02E+01 | 5.84E+01 | 1.27E+02 |
| 19 | 427 | Top Outer Element | 4.92E+00 | –2.79E+00 | –1.69E+01 | 2.18E+01 |
| 20 | 426 | Top Inner Element | 8.90E–01 | –6.96E+00 | –2.05E+01 | 2.14E+01 |
| | | Lid, Center | | | | |
| 21 | 445 | Top Flange, Top EL. | –3.65E+01 | –9.03E+02 | –8.94E+02 | 8.67E+02 |
| 22 | 428 | Top Flange, Bottom EL. | –1.15E+02 | –4.67E+02 | –4.62E+02 | 3.51E+02 |
| 23 | 544 | Bottom Flange EL. | –6.25E+01 | –1.87E+03 | –1.87E+03 | 1.81E+03 |
| | | Lid, Inner Lower Corner | | | | |
| 24 | 463 | Cyl. Shell | –1.52E+02 | –3.42E+03 | –1.66E+03 | 3.27E+03 |
| 25 | 555 | BTM Flange | 1.08E+03 | –3.71E+03 | –2.10E+03 | 4.79E+03 |
| | | Lid, Upper Flange (Seal Area) | | | | |
| 26 | 459 | TOP EL. | 8.72E+02 | –3.15E+01 | –4.02E+01 | 9.12E+02 |
| 27 | 442 | BTM EL. | 6.10E+02 | –3.88E+01 | –5.81E+01 | 6.68E+02 |

NOTES:

1. Refer to Reference [2.2], corresponding Table 2.10.9.6.
2. Stresses at locations 1 through 6 and 17 through 27 are given at the centroid of the element, therefore, the same stress value is used for $P_m$ and $P_m + P_b$.
3. a = smaller radius surface
   b = larger radius surface
4. Prefabrication stresses are not included in the inner shell stress. See Table 2.7 for values.

## Table 2.26. Fire Accident – t = 0.5 Hr

| Location | EL # | Description | Stress (psi) | | | Stress Intensity |
|---|---|---|---|---|---|---|
| | | | Sigma 1 | Sigma 2 | Sigma 3 | Q |
| | | Bottom Forging, Center | | | | |
| 1 | 96 | Cavity Surface | 3.10E+03 | –9.82E+00 | 3.14E+03 | 3.15E+03 |
| 2 | 1 | Outside Surface | –1.83E+00 | –1.78E+03 | –1.78E+03 | 1.78E+03 |
| | | Bottom Forging, Midsection | | | | |
| 3 | 102 | Cavity Surface | 3.07E+03 | –5.71E+00 | 3.17E+03 | 3.17E+03 |
| 4 | 7 | Outside Surface | –6.92E+00 | –1.88E+03 | –1.87E+03 | 1.87E+03 |
| | | Bottom Forging, Corner | | | | |
| 5 | 18 | Bottom Surface | 1.40E+03 | –1.77E+03 | –1.28E+04 | 1.42E+04 |
| 6 | 38 | Outer Surface | 8.96E+02 | –2.59E+03 | –1.00E+04 | 1.09E+04 |
| | | Cask Wall Shells | | | | |
| 7a | 115 | Inner Shell | –2.63E+03 | –2.57E+04 | –7.75E+03 | 2.31E+04 |
| 7b | | | 1.80E+04 | 1.36E+04 | 1.00E+04 | 7.99E+03 |
| 8a | 368 | Outer Shell | 2.16E+04 | 1.67E+04 | 6.71E+03 | 1.49E+04 |
| 8b | | | –1.05E+04 | –3.47E+04 | –1.95E+04 | 2.43E+04 |
| 9a | 122 | Inner Shell | 3.31E+03 | –6.55E–01 | –2.45E+02 | 3.55E+03 |
| 9b | | | 3.91E+03 | –7.33E+00 | 1.86E+02 | 3.91E+03 |
| 10a | 375 | Outer Shell | 2.32E+02 | –8.48E+02 | 2.20E+03 | 3.05E+03 |
| 10b | | | 1.57E+01 | –3.46E+03 | –2.15E+02 | 3.48E+03 |
| 11a | 129 | Inner Shell | 3.34E+03 | –6.88E+00 | –2.13E+02 | 3.55E+03 |
| 11b | | | 3.87E+03 | 1.25E+00 | 2.14E+02 | 3.87E+03 |
| 12a | 382 | Outer Shell | 1.41E+02 | –1.58E+03 | 1.93E+03 | 3.51E+03 |
| 12b | | | –6.48E+01 | –2.74E+03 | –3.87E+01 | 2.71E+03 |
| 13a | 136 | Inner Shell | 3.33E+03 | –5.16E+00 | –2.61E+02 | 3.59E+03 |
| 13b | | | 3.89E+03 | –2.57E+00 | 1.78E+02 | 3.89E+03 |
| 14a | 389 | Outer Shell | 1.28E+02 | –1.33E+03 | 2.31E+03 | 3.65E+03 |
| 14b | | | –1.58E+00 | –3.00E+03 | 1.91E+02 | 3.19E+03 |
| 15a | 142 | Inner Shell | 4.19E+03 | 2.09E+03 | 3.23E+03 | 2.10E+03 |
| 15b | | | 3.99E+03 | –3.03E+03 | 1.27E+03 | 7.01E+03 |
| 16a | 395 | Outer Shell | 1.60E+03 | –6.22E+03 | –4.53E+03 | 7.82E+03 |
| 16b | | | 3.83E+03 | –4.74E+03 | –4.77E+03 | 9.60E+03 |
| | | Top Forging | | | | |
| 17 | 415 | Inner Surface | 1.47E+03 | 6.96E+02 | 1.20E+03 | 7.75E+02 |
| 18 | 419 | Outer Surface | –6.57E+01 | –1.90E+03 | –3.52E+03 | 3.45E+03 |
| 19 | 427 | Top Outer Element | 4.07E+02 | –4.19E+02 | –4.84E+03 | 5.24E+03 |
| 20 | 426 | Top Inner Element | 1.60E+02 | –1.41E+02 | –3.75E+03 | 3.91E+03 |
| | | Lid, Center | | | | |
| 21 | 445 | Top Flange, Top EL. | 6.88E+02 | 5.58E+01 | 6.64E+02 | 6.33E+02 |
| 22 | 428 | Top Flange, Bottom EL. | 2.52E+02 | 7.83E+01 | 1.44E+02 | 1.74E+02 |
| 23 | 544 | Bottom Flange EL. | 3.15E+03 | 1.25E+02 | 3.16E+03 | 3.03E+03 |
| | | Lid, Inner Lower Corner | | | | |
| 24 | 463 | Cyl. Shell | 5.29E+03 | –6.25E+02 | 3.55E+03 | 5.91E+03 |
| 25 | 555 | BTM Flange | 5.49E+03 | –1.24E+03 | 3.51E+03 | 6.73E+03 |
| | | Lid, Upper Flange (Seal Area) | | | | |
| 26 | 459 | TOP EL. | –2.55E+01 | –1.74E+03 | –1.68E+02 | 1.71E+03 |
| 27 | 442 | BTM EL. | 1.24E+02 | –1.07E+03 | 3.74E+02 | 1.45E+03 |

NOTES:

1. Refer to Reference [2.2], corresponding Table 2.10.9.7.
2. Stresses at locations 1 through 6 and 17 through 27 are given at the centroid of the element, therefore, the same stress value is used for $P_m$ and $P_m + P_b$.
3. a = smaller radius surface
   b = larger radius surface

## Table 2.27. Fire Accident – t = 1.0 Hr

| Location | EL # | Description | Stress (psi) | | | Stress Intensity |
|---|---|---|---|---|---|---|
| | | | Sigma 1 | Sigma 2 | Sigma 3 | Q |
| | | Bottom Forging, Center | | | | |
| 1 | 96 | Cavity Surface | 8.50E+03 | –8.34E+00 | 8.53E+03 | 8.54E+03 |
| 2 | 1 | Outside Surface | –7.10E+00 | –2.07E+03 | –2.09E+03 | 2.08E+03 |
| | | Bottom Forging, Midsection | | | | |
| 3 | 102 | Cavity Surface | 8.08E+03 | –7.78E+00 | 7.79E+03 | 8.09E+03 |
| 4 | 7 | Outside Surface | 1.37E+00 | –2.57E+03 | –3.11E+03 | 3.11E+03 |
| | | Bottom Forging, Corner | | | | |
| 5 | 18 | Bottom Surface | 1.10E+03 | –8.91E+02 | –1.44E+04 | 1.55E+04 |
| 6 | 38 | Outer Surface | 5.61E+02 | –1.53E+03 | –1.23E+04 | 1.29E+04 |
| | | Cask Wall Shells | | | | |
| 7a | 115 | Inner Shell | –3.65E+03 | –3.04E+04 | –8.51E+03 | 2.67E+04 |
| 7b | | | 2.56E+04 | 2.13E+04 | 1.50E+04 | 1.06E+04 |
| 8a | 368 | Outer Shell | 2.67E+04 | 1.72E+04 | 6.15E+03 | 2.05E+04 |
| 8b | | | –1.48E+04 | –4.51E+04 | –2.53E+04 | 3.02E+04 |
| 9a | 122 | Inner Shell | 8.44E+03 | 3.84E+00 | –1.09E+02 | 8.54E+03 |
| 9b | | | 8.60E+03 | –8.13E+00 | –2.00E+01 | 8.62E+03 |
| 10a | 375 | Outer Shell | 3.38E+00 | –5.42E+03 | 9.64E+02 | 6.38E+03 |
| 10b | | | 4.67E+00 | –6.73E+03 | –3.96E+02 | 6.73E+03 |
| 11a | 129 | Inner Shell | 8.40E+03 | 4.05E–01 | –6.32E+01 | 8.46E+03 |
| 11b | | | 8.63E+03 | –1.97E+00 | 6.71E+01 | 8.63E+03 |
| 12a | 382 | Outer Shell | 3.07E+00 | –5.50E+03 | 6.31E+02 | 6.13E+03 |
| 12b | | | 8.52E+00 | –6.64E+03 | –6.37E+02 | 6.65E+03 |
| 13a | 136 | Inner Shell | 8.32E+03 | 4.36E–01 | –9.46E+01 | 8.41E+03 |
| 13b | | | 8.71E+03 | –3.10E+00 | 7.98E+01 | 8.71E+03 |
| 14a | 389 | Outer Shell | 5.30E+00 | –5.69E+03 | 9.79E+02 | 6.67E+03 |
| 14b | | | 5.00E+00 | –6.46E+03 | –2.30E+02 | 6.47E+03 |
| 15a | 142 | Inner Shell | 8.15E+03 | 2.41E+03 | 5.47E+03 | 5.74E+03 |
| 15b | | | 1.06E+04 | –2.07E+03 | 3.52E+03 | 1.26E+04 |
| 16a | 395 | Outer Shell | 3.77E+02 | –6.54E+03 | –6.68E+03 | 7.06E+03 |
| 16b | | | 4.61E+03 | –1.16E+04 | –7.51E+03 | 1.62E+04 |
| | | Top Forging | | | | |
| 17 | 415 | Inner Surface | 2.15E+03 | 3.86E+02 | –8.72E+01 | 2.24E+03 |
| 18 | 419 | Outer Surface | –6.10E+01 | –2.81E+03 | –6.43E+03 | 6.37E+03 |
| 19 | 427 | Top Outer Element | 3.23E+02 | –4.23E+02 | –1.05E+04 | 1.09E+04 |
| 20 | 426 | Top Inner Element | 3.50E+02 | –2.65E+02 | –1.05E+04 | 1.08E+04 |
| | | Lid, Center | | | | |
| 21 | 445 | Top Flange, Top EL. | 3.00E+03 | 5.17E+01 | 3.00E+03 | 2.95E+03 |
| 22 | 428 | Top Flange, Bottom EL. | 1.38E+03 | 1.61E+02 | 1.31E+03 | 1.22E+03 |
| 23 | 544 | Bottom Flange EL. | 7.20E+03 | 1.21E+02 | 7.20E+03 | 7.08E+03 |
| | | Lid, Inner Lower Corner | | | | |
| 24 | 463 | Cyl. Shell | 7.37E+03 | –9.71E+02 | 6.36E+03 | 8.34E+03 |
| 25 | 555 | BTM Flange | 8.53E+03 | –7.09E+02 | 6.15E+03 | 9.24E+03 |
| | | Lid, Upper Flange (Seal Area) | | | | |
| 26 | 459 | TOP EL. | 3.02E+02 | –1.33E+03 | –2.52E+03 | 2.82E+03 |
| 27 | 442 | BTM EL. | 1.06E+03 | –3.85E+02 | –1.07E+03 | 2.13E+03 |

NOTES:

1. Refer to Reference [2.2], corresponding Table 2.10.9.8.
2. Stresses at locations 1 through 6 and 17 through 27 are given at the centroid of the element, therefore, the same stress value is used for $P_m$ and $P_m + P_b$.
3. a = smaller radius surface
   b = larger radius surface

## Table 2.28. Fire Accident – t = 1.5 Hr

| Location | EL # | Description | Stress (psi) | | | Stress Intensity |
|---|---|---|---|---|---|---|
| | | | Sigma 1 | Sigma 2 | Sigma 3 | Q |
| | | Bottom Forging, Center | | | | |
| 1 | 96 | Cavity Surface | 6.85E+03 | –3.64E+00 | 6.87E+03 | 6.87E+03 |
| 2 | 1 | Outside Surface | 1.90E+01 | –6.55E+02 | –6.66E+02 | 6.85E+02 |
| | | Bottom Forging, Midsection | | | | |
| 3 | 102 | Cavity Surface | 6.41E+03 | 4.11E+00 | 5.64E+03 | 6.40E+03 |
| 4 | 7 | Outside Surface | 2.13E+01 | –1.11E+03 | –1.95E+03 | 1.97E+03 |
| | | Bottom Forging, Corner | | | | |
| 5 | 18 | Bottom Surface | 6.05E+02 | –3.38E+02 | –8.36E+03 | 8.96E+03 |
| 6 | 38 | Outer Surface | 2.57E+02 | –6.45E+02 | –7.26E+03 | 7.51E+03 |
| | | Cask Wall Shells | | | | |
| 7a | 115 | Inner Shell | –4.49E+03 | –3.36E+04 | –1.09E+04 | 2.91E+04 |
| 7b | | | 2.49E+04 | 1.96E+04 | 1.35E+04 | 1.14E+04 |
| 8a | 368 | Outer Shell | 2.47E+04 | 1.57E+04 | 7.33E+03 | 1.74E+04 |
| 8b | | | –1.08E+04 | –4.08E+04 | –2.03E+04 | 3.00E+04 |
| 9a | 122 | Inner Shell | 5.41E+03 | 3.68E+00 | –1.04E+02 | 5.52E+03 |
| 9b | | | 5.50E+03 | –7.97E+00 | 1.49E+01 | 5.51E+03 |
| 10a | 375 | Outer Shell | –4.31E–01 | –3.46E+03 | 5.43E+02 | 4.00E+03 |
| 10b | | | 1.92E+00 | –4.03E+03 | –1.55E+02 | 4.03E+03 |
| 11a | 129 | Inner Shell | 5.31E+03 | –1.22E+00 | –1.01E+02 | 5.41E+03 |
| 11b | | | 5.60E+03 | –1.23E+00 | 1.00E+02 | 5.60E+03 |
| 12a | 382 | Outer Shell | –1.31E+00 | –3.46E+03 | 3.28E+02 | 3.79E+03 |
| 12b | | | 7.26E+00 | –4.02E+03 | –3.39E+02 | 4.03E+03 |
| 13a | 136 | Inner Shell | 5.17E+03 | –3.10E+00 | –1.27E+02 | 5.30E+03 |
| 13b | | | 5.73E+03 | –1.45E+00 | 1.72E+02 | 5.74E+03 |
| 14a | 389 | Outer Shell | –1.76E+00 | –3.81E+03 | 4.99E+02 | 4.31E+03 |
| 14b | | | 4.05E+00 | –3.68E+03 | –2.35E+00 | 3.68E+03 |
| 15a | 142 | Inner Shell | 7.40E+03 | 2.98E+03 | 3.98E+03 | 4.42E+03 |
| 15b | | | 4.77E+03 | –3.05E+03 | 2.78E+02 | 7.81E+03 |
| 16a | 395 | Outer Shell | 1.54E+03 | –6.36E+03 | –5.28E+03 | 7.89E+03 |
| 16b | | | 4.24E+03 | –7.95E+03 | –5.16E+03 | 1.22E+04 |
| | | Top Forging | | | | |
| 17 | 415 | Inner Surface | 1.95E+03 | 6.75E+02 | –2.58E+02 | 2.21E+03 |
| 18 | 419 | Outer Surface | –1.04E+02 | –1.90E+03 | –4.77E+03 | 4.67E+03 |
| 19 | 427 | Top Outer Element | 2.24E+02 | –3.06E+02 | –7.86E+03 | 8.08E+03 |
| 20 | 426 | Top Inner Element | 2.73E+02 | –2.07E+02 | –7.95E+03 | 8.22E+03 |
| | | Lid, Center | | | | |
| 21 | 445 | Top Flange, Top EL. | 3.23E+03 | 6.57E+01 | 3.19E+03 | 3.16E+03 |
| 22 | 428 | Top Flange, Bottom EL. | 2.81E+03 | 2.09E+02 | 2.82E+03 | 2.61E+03 |
| 23 | 544 | Bottom Flange EL. | 6.52E+03 | 1.31E+02 | 6.52E+03 | 6.39E+03 |
| | | Lid, Inner Lower Corner | | | | |
| 24 | 463 | Cyl. Shell | 6.81E+03 | –6.41E+02 | 4.62E+03 | 7.45E+03 |
| 25 | 555 | BTM Flange | 7.96E+03 | –8.18E+02 | 4.91E+03 | 8.78E+03 |
| | | Lid, Upper Flange (Seal Area) | | | | |
| 26 | 459 | TOP EL. | 3.79E+02 | –5.58E+02 | –1.90E+03 | 2.28E+03 |
| 27 | 442 | BTM EL. | 6.51E+02 | –2.58E+02 | –1.07E+03 | 1.72E+03 |

NOTES:

1. Refer to Reference [2.2], corresponding Table 2.10.9.9.
2. Stresses at locations 1 through 6 and 17 through 27 are given at the centroid of the element, therefore, the same stress value is used for $P_m$ and $P_m + P_b$.
3. a = smaller radius surface
   b = larger radius surface

## Table 2.29. Fire Accident – t = 2.0 Hr

| Location | EL # | Description | Stress (psi) | | | Stress Intensity |
|---|---|---|---|---|---|---|
| | | | Sigma 1 | Sigma 2 | Sigma 3 | Q |
| | | Bottom Forging, Center | | | | |
| 1 | 96 | Cavity Surface | 4.25E+03 | 9.25E–01 | 4.26E+03 | 4.26E+03 |
| 2 | 1 | Outside Surface | 2.67E+02 | –5.71E+01 | 1.71E+02 | 3.24E+02 |
| | | Bottom Forging, Midsection | | | | |
| 3 | 102 | Cavity Surface | 3.92E+03 | 8.59E+00 | 3.11E+03 | 3.91E+03 |
| 4 | 7 | Outside Surface | 1.04E+02 | –1.96E+02 | –8.99E+02 | 1.00E+03 |
| | | Bottom Forging, Corner | | | | |
| 5 | 18 | Bottom Surface | 2.81E+02 | –4.65E+01 | –3.57E+03 | 3.85E+03 |
| 6 | 38 | Outer Surface | 7.26E+01 | –1.09E+02 | –3.17E+03 | 3.24E+03 |
| | | Cask Wall Shells | | | | |
| 7a | 115 | Inner Shell | –4.85E+03 | –3.54E+04 | –1.25E+04 | 3.06E+04 |
| 7b | | | 2.32E+04 | 1.67E+04 | 1.14E+04 | 1.18E+04 |
| 8a | 368 | Outer Shell | 2.35E+04 | 1.69E+04 | 9.46E+03 | 1.40E+04 |
| 8b | | | –8.76E+03 | –3.87E+04 | –1.69E+04 | 2.99E+04 |
| 9a | 122 | Inner Shell | 2.32E+03 | –2.12E+00 | –1.67E+02 | 2.49E+03 |
| 9b | | | 2.56E+03 | –4.35E+00 | 9.61E+01 | 2.56E+03 |
| 10a | 375 | Outer Shell | 1.37E+00 | –1.28E+03 | 2.20E+02 | 1.50E+03 |
| 10b | | | –3.68E+00 | –1.50E+03 | –4.95E+01 | 1.50E+03 |
| 11a | 129 | Inner Shell | 2.24E+03 | –1.16E+00 | –1.56E+02 | 2.40E+03 |
| 11b | | | 2.64E+03 | –2.43E+00 | 1.56E+02 | 2.64E+03 |
| 12a | 382 | Outer Shell | 3.38E+00 | –1.33E+03 | 1.21E+02 | 1.45E+03 |
| 12b | | | –1.08E+00 | –1.45E+03 | –1.24E+02 | 1.45E+03 |
| 13a | 136 | Inner Shell | 2.10E+03 | –6.31E–011 | –1.67E+02 | 2.26E+03 |
| 13b | | | 2.78E+03 | –6.34E+00 | 2.35E+02 | 2.79E+03 |
| 14a | 389 | Outer Shell | –4.15E+00 | –1.61E+03 | 1.64E+02 | 1.77E+03 |
| 14b | | | 1.85E+00 | –1.17E+03 | 7.55E+01 | 1.25E+03 |
| 15a | 142 | Inner Shell | 5.38E+03 | 3.02E+03 | 2.48E+03 | 2.89E+03 |
| 15b | | | 9.28E+02 | –4.54E+03 | –1.88E+03 | 5.47E+03 |
| 16a | 395 | Outer Shell | 2.65E+03 | –6.52E+03 | –3.89E+03 | 9.17E+03 |
| 16b | | | 3.82E+03 | –4.03E+03 | –2.83E+03 | 7.85E+03 |
| | | Top Forging | | | | |
| 17 | 415 | Inner Surface | 1.96E+03 | 6.13E+02 | –8.46E+01 | 2.04E+03 |
| 18 | 419 | Outer Surface | –1.14E+02 | –1.13E+03 | –2.96E+03 | 2.84E+03 |
| 19 | 427 | Top Outer Element | 1.30E+02 | –1.85E+02 | –4.80E+03 | 4.93E+03 |
| 20 | 426 | Top Inner Element | 1.74E+02 | –1.28E+02 | –4.90E+03 | 5.07E+03 |
| | | Lid, Center | | | | |
| 21 | 445 | Top Flange, Top EL. | 3.33E+03 | 6.61E+01 | 3.31E+03 | 3.27E+03 |
| 22 | 428 | Top Flange, Bottom EL. | 2.44E+03 | 2.10E+02 | 2.43E+03 | 2.23E+03 |
| 23 | 544 | Bottom Flange EL. | 5.06E+03 | 1.27E+02 | 5.06E+03 | 4.93E+03 |
| | | Lid, Inner Lower Corner | | | | |
| 24 | 463 | Cyl. Shell | 5.54E+03 | –6.97E+02 | 2.95E+03 | 6.24E+03 |
| 25 | 555 | BTM Flange | 6.26E+03 | –7.35E+02 | 3.53E+03 | 7.00E+03 |
| | | Lid, Upper Flange (Seal Area) | | | | |
| 26 | 459 | TOP EL. | 2.89E+02 | –5.06E+02 | –1.09E+03 | 1.38E+03 |
| 27 | 442 | BTM EL. | 2.97E+02 | –4.54E+02 | –7.25E+02 | 1.02E+03 |

NOTES:

1. Refer to Reference [2.2], corresponding Table 2.10.9.10.
2. Stresses at locations 1 through 6 and 17 through 27 are given at the centroid of the element, therefore, the same stress value is used for $P_m$ and $P_m + P_b$.
3. a = smaller radius surface
   b = larger radius surface

## Table 2.30. Fire Accident – t = 2.5 Hr

| Location | EL # | Description | Stress (psi) | | | Stress Intensity |
|---|---|---|---|---|---|---|
| | | | Sigma 1 | Sigma 2 | Sigma 3 | Q |
| | | Bottom Forging, Center | | | | |
| 1 | 96 | Cavity Surface | 2.46E+03 | –3.64E+00 | 2.48E+03 | 2.49E+03 |
| 2 | 1 | Outside Surface | 3.02E+02 | –3.21E+01 | 2.38E+02 | 3.34E+02 |
| | | Bottom Forging, Midsection | | | | |
| 3 | 102 | Cavity Surface | 2.27E+03 | 5.62E+00 | 1.69E+03 | 2.27E+03 |
| 4 | 7 | Outside Surface | 1.68E+02 | –5.78E+01 | –4.41E+02 | 6.09E+02 |
| | | Bottom Forging, Corner | | | | |
| 5 | 18 | Bottom Surface | 2.12E+02 | –2.98E+01 | –9.24E+02 | 1.14E+03 |
| 6 | 38 | Outer Surface | 1.45E+02 | –2.73E+01 | –8.99E+02 | 1.04E+03 |
| | | Cask Wall Shells | | | | |
| 7a | 115 | Inner Shell | –5.07E+03 | –3.59E+04 | –1.29E+04 | 3.08E+04 |
| 7b | | | 2.25E+04 | 1.44E+04 | 1.05E+04 | 1.20E+04 |
| 8a | 368 | Outer Shell | 2.30E+04 | 1.69E+04 | 1.02E+04 | 1.28E+04 |
| 8b | | | –7.27E+03 | –3.64E+04 | –1.48E+04 | 2.91E+04 |
| 9a | 122 | Inner Shell | 3.93E+02 | –2.58E–01 | –2.08E+02 | 6.01E+02 |
| 9b | | | 7.88E+02 | –7.92E+00 | 1.57E+02 | 7.96E+02 |
| 10a | 375 | Outer Shell | 8.79E–01 | –5.57E+01 | 5.71E+01 | 1.13E+02 |
| 10b | | | –4.11E+00 | –5.65E+01 | 2.94E+01 | 8.59E+01 |
| 11a | 129 | Inner Shell | 3.46E+02 | –2.98E+00 | –1.99E+02 | 5.44E+02 |
| 11b | | | 8.34E+02 | –1.87E+00 | 1.95E+02 | 8.36E+02 |
| 12a | 382 | Outer Shell | –8.40E–01 | –1.15E+02 | 2.39E+00 | 1.17E+02 |
| 12b | | | 7.93E–01 | 2.69E+00 | 3.72E+00 | 2.92E+00 |
| 13a | 136 | Inner Shell | 2.33E+02 | –4.95E+00 | –2.03E+02 | 4.36E+02 |
| 13b | | | 9.44E+02 | –3.75E+00 | 2.73E+02 | 9.48E+02 |
| 14a | 389 | Outer Shell | –3.10E+01 | –2.58E+02 | 1.52E+00 | 2.60E+02 |
| 14b | | | 1.03E+02 | 6.66E+01 | 9.37E+01 | 3.59E+01 |
| 15a | 142 | Inner Shell | 3.82E+03 | 2.75E+03 | 1.55E+03 | 2.28E+03 |
| 15b | | | –7.78E+01 | –6.27E+03 | –2.81E+03 | 6.19E+03 |
| 16a | 395 | Outer Shell | 3.15E+03 | –7.20E+03 | –3.09E+03 | 1.04E+04 |
| 16b | | | 3.77E+03 | –1.32E+03 | –1.11E+03 | 5.09E+03 |
| | | Top Forging | | | | |
| 17 | 415 | Inner Surface | 1.98E+03 | 5.59E+02 | 1.32E+02 | 1.85E+03 |
| 18 | 419 | Outer Surface | –7.03E+01 | –7.32E+02 | –1.72E+03 | 1.65E+03 |
| 19 | 427 | Top Outer Element | 7.27E+01 | –1.09E+02 | –2.76E+03 | 2.83E+03 |
| 20 | 426 | Top Inner Element | 1.02E+02 | –7.08E+01 | –2.83E+03 | 2.93E+03 |
| | | Lid, Center | | | | |
| 21 | 445 | Top Flange, Top EL. | 2.92E+03 | 4.80E+01 | 2.91E+03 | 2.87E+03 |
| 22 | 428 | Top Flange, Bottom EL. | 1.48E+03 | 1.51E+02 | 1.44E+03 | 1.33E+03 |
| 23 | 544 | Bottom Flange EL. | 3.59E+03 | 1.18E+02 | 3.59E+03 | 3.47E+03 |
| | | Lid, Inner Lower Corner | | | | |
| 24 | 463 | Cyl. Shell | 4.44E+03 | –8.86E+02 | 1.89E+03 | 5.33E+03 |
| 25 | 555 | BTM Flange | 4.60E+03 | –4.97E+02 | 2.48E+03 | 5.09E+03 |
| | | Lid, Upper Flange (Seal Area) | | | | |
| 26 | 459 | TOP EL. | 1.66E+02 | –5.51E+02 | –5.37E+02 | 7.18E+02 |
| 27 | 442 | BTM EL. | 9.55E+01 | –7.05E+02 | –4.49E+02 | 8.01E+02 |

NOTES:

1. Refer to Reference [2.2], corresponding Table 2.10.9.11.
2. Stresses at locations 1 through 6 and 17 through 27 are given at the centroid of the element, therefore, the same stress value is used for $P_m$ and $P_m + P_b$.
3. a = smaller radius surface
   b = larger radius surface

## Table 2.31. Fire Accident – t = 3.0 Hr

| Location | EL # | Description | Stress (psi) | | | Stress Intensity |
|---|---|---|---|---|---|---|
| | | | Sigma 1 | Sigma 2 | Sigma 3 | Q |
| | | Bottom Forging, Center | | | | |
| 1 | 96 | Cavity Surface | 1.40E+03 | –4.14E+00 | 1.42E+03 | 1.42E+03 |
| 2 | 1 | Outside Surface | 1.55E+02 | –5.14E+01 | 8.67E+01 | 2.06E+02 |
| | | Bottom Forging, Midsection | | | | |
| 3 | 102 | Cavity Surface | 1.30E+03 | 6.73E+00 | 9.62E+02 | 1.29E+03 |
| 4 | 7 | Outside Surface | 1.08E+02 | –6.46E+01 | –2.64E+02 | 3.72E+02 |
| | | Bottom Forging, Corner | | | | |
| 5 | 18 | Cavity Surface | 2.07E+02 | –8.97E+01 | 5.06E+02 | 5.96E+02 |
| 6 | 38 | Outside Surface | 2.29E+02 | –6.63E+01 | 3.73E+02 | 4.39E+02 |
| | | Cask Wall Shells | | | | |
| 7a | 115 | Inner Shell | –5.29E+03 | –3.60E+04 | –1.29E+04 | 3.07E+04 |
| 7b | | | 2.20E+04 | 1.30E+04 | 1.00E+04 | 1.20E+04 |
| 8a | 368 | Outer Shell | 2.22E+04 | 1.62E+04 | 1.04E+04 | 1.18E+04 |
| 8b | | | –6.00E+03 | –3.44E+04 | –1.32E+04 | 2.84E+04 |
| 9a | 122 | Inner Shell | 6.18E–01 | –7.10E+02 | –2.44E+02 | 7.11E+02 |
| 9b | | | –9.05E+00 | –1.93E+02 | 1.92E+02 | 3.85E+02 |
| 10a | 375 | Outer Shell | 5.45E+02 | –1.34E+00 | –3.52E+01 | 5.80E+02 |
| 10b | | | 7.95E+02 | –4.61E+00 | 1.04E+02 | 8.00E+02 |
| 11a | 129 | Inner Shell | –1.92E+00 | –7.22E+02 | –2.15E+02 | 7.20E+02 |
| 11b | | | –3.52E+00 | –1.81E+02 | 2.23E+02 | 4.05E+02 |
| 12a | 382 | Outer Shell | 5.30E+02 | 3.58E+00 | –6.91E+01 | 5.99E+02 |
| 12b | | | 8.10E+02 | –4.67E+00 | 7.32E+01 | 8.15E+02 |
| 13a | 136 | Inner Shell | –7.49E+00 | –7.83E+02 | –2.16E+02 | 7.76E+02 |
| 13b | | | –9.86E–01 | –1.22E+02 | 2.74E+02 | 3.96E+02 |
| 14a | 389 | Outer Shell | 4.08E+02 | 5.34E–02 | –7.55E+01 | 4.84E+02 |
| 14b | | | 9.29E+02 | –4.78E+00 | 1.30E+02 | 9.34E+02 |
| 15a | 142 | Inner Shell | 3.55E+03 | 2.19E+03 | 1.13E+03 | 2.42E+03 |
| 15b | | | –8.40E+02 | –7.20E+03 | –3.29E+03 | 6.36E+03 |
| 16a | 395 | Outer Shell | 2.73E+03 | –7.57E+03 | –3.02E+03 | 1.03E+04 |
| 16b | | | 4.06E+03 | 3.04E+02 | –1.77E+02 | 4.24E+03 |
| | | Top Forging | | | | |
| 17 | 415 | Inner Surface | 1.88E+03 | 4.36E+02 | 2.78E+02 | 1.60E+03 |
| 18 | 419 | Outer Surface | 3.36E+01 | –5.27E+02 | –8.67E+02 | 9.01E+02 |
| 19 | 427 | Top Outer Element | 2.67E+01 | –4.98E+01 | –1.30E+03 | 1.33E+03 |
| 20 | 426 | Top Inner Element | 5.49E+01 | –3.29E+01 | –1.34E+03 | 1.39E+03 |
| | | Lid, Center | | | | |
| 21 | 445 | Top Flange, Top EL. | 2.57E+03 | 4.43E+01 | 2.56E+03 | 2.53E+03 |
| 22 | 428 | Top Flange, Bottom EL. | 7.41E+02 | 8.12E+01 | 5.97E+02 | 6.60E+02 |
| 23 | 544 | Bottom Flange EL. | 2.60E+03 | 1.16E+02 | 2.61E+03 | 2.49E+03 |
| | | Lid, Inner Lower Corner | | | | |
| 24 | 463 | Cyl. Shell | 4.04E+03 | –9.80E+02 | 1.28E+03 | 5.02E+03 |
| 25 | 555 | BTM Flange | 4.09E+03 | –7.70E+02 | 1.96E+03 | 4.86E+03 |
| | | Lid, Upper Flange (Seal Area) | | | | |
| 26 | 459 | TOP EL. | 8.42E+01 | –5.35E+02 | –8.59E+01 | 6.19E+02 |
| 27 | 442 | BTM EL. | 2.91E+01 | –9.83E+02 | –2.16E+02 | 1.01E+03 |

NOTES:

1. Refer to Reference [2.2], corresponding Table 2.10.9.12.
2. Stresses at locations 1 through 6 and 17 through 27 are given at the centroid of the element, therefore, the same stress value is used for $P_m$ and $P_m + P_b$.
3. a = smaller radius surface
   b = larger radius surface

**Table 2.32. Summary of Load Combinations for Normal and Hypothetical Accident Conditions of Transport**

| Normal or Accident Condition | Comb Index | Applicable Initial Condition | | | | | | | | |
|---|---|---|---|---|---|---|---|---|---|---|
| | | Ambient Temperature (°F) | | Insolation | | Decay Heat | | Max. Int Pressure 30 psia | Max. Weight of Contents | Fab. Stress |
| | | 100 | -20 | Max. | None | Max. 2000 Watts | Note | | | |
| Normal Conditions | | | | | | | | | | |
| Hot Environment - | | | | | | | | | | |
| 100°F Ambient Temp. | 1 | X | | X | | X | | X | | X |
| Cold Environment - | 2a | | | | X | X | | X | | X |
| -40°F Ambient Temp. | 2b | | | | X | | X | X | | X |
| Increased external pressure | 3a | X | | X | | X | | X | | X |
| 20 psia | 3b | | X | | X | X | | X | | X |
| Minimum external pressure | 4a | X | | X | | X | | X | | X |
| 3.5 psia | 4b | | X | | X | X | | X | | X |
| Vibration and shock - | 5a | X | | X | | X | | X | | X |
| Normally incident to the | 5b | | X | | X | X | | X | | X |
| mode of transport | 5c | | X | | X | | X | X | | X |
| Free Drop - 1 foot drop | 6a | X | | X | | X | | X | X | X |
| | 6b | | X | | X | X | | X | X | X |
| | 6c | | X | | X | | X | X | X | X |
| Accident Conditions | | | | | | | | | | |
| Free Drop - 30 foot drop | 7a | X | | X | | X | | X | X | X |
| | 7b | | X | | X | X | | X | X | X |
| | 7c | | X | | X | | X | X | X | X |
| Puncture - Drop onto bar | 8a | X | | X | | X | | X | X | X |
| | 8b | | X | | X | X | | X | X | X |
| | 8c | | X | | X | | X | X | X | X |
| Thermal - Fire Accident | 9 | X | | X | | X | | X | | X |

**Table 2.33. Summary of Stresses for Load Combinations Normal Conditions of Transport, Stress Point 1 (0.76 in. Wall Toroid)**

| Load Combination | Comb Index | Stress Intensity (psi) | | | | Fatigue Salt |
|---|---|---|---|---|---|---|
| | | Q | $P_m$ | $P_m + P_b$ | $P_m + P_b + Q$ | |
| Hot Environment | 1 | 1.11E+03 | 1.30E+01 | 1.30E+01 | 1.12E+03 | |
| Cold Environment | 2a | 1.31E+03 | 1.30E+01 | 1.30E+01 | 1.32E+03 | |
| Cold Environment | 2b | 1.01E+02 | 1.30E+01 | 1.30E+01 | 1.14E+02 | |
| Minimum Ext. Press. | 3a | 1.11E+03 | 2.55E+01 | 2.55E+01 | 1.14E+03 | |
| Minimum Ext. Press. | 3b | 1.29E+03 | 2.55E+01 | 2.55E+01 | 1.32E+03 | |
| Increased Ext. Press. | 4a | 1.11E+03 | 5.25E+00 | 5.25E+00 | 1.12E+03 | |
| Increased Ext. Press. | 4b | 1.29E+03 | 5.25E+00 | 5.25E+00 | 1.30E+03 | |
| Vibration and Shock | 5a | 1.11E+03 | 4.03E+01 | 4.03E+01 | 1.15E+03 | 5.76E+02 |
| Vibration and Shock | 5b | 1.29E+03 | 4.03E+01 | 4.03E+01 | 1.33E+03 | 6.67E+02 |
| Vibration and Shock | 5c | 8.37E+01 | 4.03E+01 | 4.03E+01 | 1.24E+02 | 6.20E+01 |
| Free Drop - Top | 6a | 1.11E+03 | 5.28E+02 | 5.28E+02 | 1.64E+03 | |
| Free Drop - Top | 6b | 1.29E+03 | 5.28E+02 | 5.28E+02 | 1.82E+03 | |
| Free Drop - Top | 6c | 8.37E+01 | 5.28E+02 | 5.28E+02 | 6.12E+02 | |
| Free Drop - Side, 0 MER | 6a | 1.11E+03 | 3.17E+02 | 3.17E+02 | 1.43E+03 | |
| Free Drop - Side, 0 MER | 6b | 1.29E+03 | 3.17E+02 | 3.17E+02 | 1.61E+03 | |
| Free Drop - Side, 0 MER | 6c | 8.37E+01 | 3.17E+02 | 3.17E+02 | 4.01E+02 | |
| Free Drop - Side, 45 MER | 6a | 1.11E+03 | 2.56E+02 | 2.56E+02 | 1.37E+03 | |
| Free Drop - Side, 45 MER | 6b | 1.29E+03 | 2.56E+02 | 2.56E+02 | 1.55E+03 | |
| Free Drop - Side, 45 MER | 6c | 8.37E+01 | 2.56E+02 | 2.56E+02 | 3.40E+02 | |
| Maximum Stress Intensity | | 1.31E+03 | 5.28E+02 | 5.28E+02 | 1.82E+03 | |

NOTES:

1. Refer to Reference [2.2], corresponding Table 2.10.9.43A.
2. $P_m < S_m = 18.7$ ksi
   $P_m + P_b < 1.5 \cdot S_m = 28.1$ ksi
   $P_m + P_b + Q < 3.0 \cdot S_m = 56.1$ ksi
3. See Table 2.32 for combination index identification.
4. For combinations with Salt not listed, the number of load cycles are few and therefore, the fatigue qualifications are met.
5. MER = Meridian, angle of orientation from the contact edge where stresses are given.
6. Stresses are given at the centroid of the element, therefore, the same stress value is used for $P_m$ and $P_m + P_b$.

**Table 2.34. Summary of Stresses for Load Combinations Normal Conditions of Transport, Stress Point 2 (0.76 in. Wall Toroid)**

| Load Combination | Comb Index | Stress Intensity (psi) | | | | Fatigue Salt |
|---|---|---|---|---|---|---|
| | | Q | $P_m$ | $P_m + P_b$ | $P_m + P_b + Q$ | |
| Hot Environment | 1 | 8.45E+02 | 1.37E+01 | 1.37E+01 | 8.59E+02 | |
| Cold Environment | 2a | 6.62E+02 | 1.37E+01 | 1.37E+01 | 6.76E+02 | |
| Cold Environment | 2b | 8.38E+01 | 1.37E+01 | 1.37E+01 | 9.75E+01 | |
| Minimum Ext. Press. | 3a | 8.45E+02 | 2.88E+01 | 2.88E+01 | 8.74E+02 | |
| Minimum Ext. Press. | 3b | 6.73E+02 | 2.88E+01 | 2.88E+01 | 7.02E+02 | |
| Increased Ext. Press. | 4a | 8.45E+02 | 3.93E+00 | 3.93E+00 | 8.49E+02 | |
| Increased Ext. Press. | 4b | 6.73E+02 | 3.93E+00 | 3.93E+00 | 6.77E+02 | |
| Vibration and Shock | 5a | 8.45E+02 | 5.11E+01 | 5.11E+01 | 8.96E+02 | 4.48E+02 |
| Vibration and Shock | 5b | 6.73E+02 | 5.11E+01 | 5.11E+01 | 7.24E+02 | 3.62E+02 |
| Vibration and Shock | 5c | 7.16E+01 | 5.11E+01 | 5.11E+01 | 1.23E+02 | 6.14E+01 |
| Free Drop - Top | 6a | 8.45E+02 | 5.13E+02 | 5.13E+02 | 1.36E+03 | |
| Free Drop - Top | 6b | 6.73E+02 | 5.13E+02 | 5.13E+02 | 1.19E+03 | |
| Free Drop - Top | 6c | 7.16E+01 | 5.13E+02 | 5.13E+02 | 5.85E+02 | |
| Free Drop - Side, 0 MER | 6a | 8.45E+02 | 3.99E+02 | 3.99E+02 | 1.24E+03 | |
| Free Drop - Side, 0 MER | 6b | 6.73E+02 | 3.99E+02 | 3.99E+02 | 1.07E+03 | |
| Free Drop - Side, 0 MER | 6c | 7.16E+01 | 3.99E+02 | 3.99E+02 | 4.71E+02 | |
| Free Drop - Side, 45 MER | 6a | 8.45E+02 | 3.70E+02 | 3.70E+02 | 1.22E+03 | |
| Free Drop - Side, 45 MER | 6b | 6.73E+02 | 3.70E+02 | 3.70E+02 | 1.04E+03 | |
| Free Drop - Side, 45 MER | 6c | 7.16E+01 | 3.70E+02 | 3.70E+02 | 4.42E+02 | |
| Maximum Stress Intensity | | 8.45E+02 | 5.13E+02 | 5.13E+02 | 1.36E+03 | |

NOTES:

1. Refer to Reference [2.2], corresponding Table 2.10.9.44A.
2. $P_m < S_m = 18.7$ ksi
   $P_m + P_b < 1.5 \cdot S_m = 28.1$ ksi
   $P_m + P_b + Q < 3.0 \cdot S_m = 56.1$ ksi
3. See Table 2.32 for combination index identification.
4. For combinations with Salt not listed, the number of load cycles are few and therefore, the fatigue qualifications are met.
5. MER = Meridian, angle of orientation from the contact edge where stresses are given.
6. Stresses are given at the centroid of the element, therefore, the same stress value is used for $P_m$ and $P_m + P_b$.

**Table 2.35. Summary of Stresses for Load Combinations Normal Conditions of Transport, Stress Point 3 (0.76 in. Wall Toroid)**

| Load Combination | Comb Index | Stress Intensity (psi) | | | | Fatigue Salt |
|---|---|---|---|---|---|---|
| | | Q | $P_m$ | $P_m + P_b$ | $P_m + P_b + Q$ | |
| Hot Environment | 1 | 8.97E+02 | 1.51E+01 | 1.51E+01 | 9.12E+02 | |
| Cold Environment | 2a | 1.15E+03 | 1.51E+01 | 1.51E+01 | 1.16E+03 | |
| Cold Environment | 2b | 1.90E+02 | 1.51E+01 | 1.51E+01 | 2.05E+02 | |
| Minimum Ext. Press. | 3a | 8.97E+02 | 2.69E+01 | 2.69E+01 | 9.23E+02 | |
| Minimum Ext. Press. | 3b | 1.12E+03 | 2.69E+01 | 2.69E+01 | 1.15E+03 | |
| Increased Ext. Press. | 4a | -8.97E+02 | 6.72E+00 | 6.72E+00 | 9.03E+02 | |
| Increased Ext. Press. | 4b | 1.12E+03 | 6.72E+00 | 6.72E+00 | 1.13E+03 | |
| Vibration and Shock | 5a | 8.97E+02 | 8.44E+02 | 8.44E+02 | 1.74E+03 | 8.70E+02 |
| Vibration and Shock | 5b | 1.12E+03 | 8.44E+02 | 8.44E+02 | 1.96E+03 | 9.82E+02 |
| Vibration and Shock | 5c | 1.50E+02 | 8.44E+02 | 8.44E+02 | 9.94E+02 | 4.97E+02 |
| Free Drop - Top | 6a | 8.97E+02 | 4.36E+02 | 4.36E+02 | 1.33E+03 | |
| Free Drop - Top | 6b | 1.12E+03 | 4.36E+02 | 4.36E+02 | 1.56E+03 | |
| Free Drop - Top | 6c | 1.50E+02 | 4.36E+02 | 4.36E+02 | 5.86E+02 | |
| Free Drop - Side, 0 MER | 6a | 8.97E+02 | 1.08E+04 | 1.08E+04 | 1.17E+04 | |
| Free Drop - Side, 0 MER | 6b | 1.12E+03 | 1.08E+04 | 1.08E+04 | 1.19E+04 | |
| Free Drop - Side, 0 MER | 6c | 1.50E+02 | 1.08E+04 | 1.08E+04 | 1.10E+04 | |
| Free Drop - Side, 45 MER | 6a | 8.97E+02 | 4.61E+03 | 4.61E+03 | 5.51E+03 | |
| Free Drop - Side, 45 MER | 6b | 1.12E+03 | 4.61E+03 | 4.61E+03 | 5.73E+03 | |
| Free Drop - Side, 45 MER | 6c | 1.50E+02 | 4.61E+03 | 4.61E+03 | 4.76E+03 | |
| Maximum Stress Intensity | | 1.15E+03 | 1.08E+04 | 1.08E+04 | 1.19E+04 | |

NOTES:

1. Refer to Reference [2.2], corresponding Table 2.10.9.45A.
2. $P_m < S_m = 18.7$ ksi
   $P_m + P_b < 1.5 \cdot S_m = 28.1$ ksi
   $P_m + P_b + Q < 3.0 \cdot S_m = 56.1$ ksi
3. See Table 2.32 for combination index identification.
4. For combinations with Salt not listed, the number of load cycles are few and therefore, the fatigue qualifications are met.
5. MER = Meridian, angle of orientation from the contact edge where stresses are given.
6. Stresses are given at the centroid of the element, therefore, the same stress value is used for $P_m$ and $P_m + P_b$.

**Table 2.36. Summary of Stresses for Load Combinations Normal Conditions of Transport, Stress Point 4 (0.76 in. Wall Toroid)**

| Load Combination | Comb Index | Stress Intensity (psi) | | | | Fatigue Salt |
|---|---|---|---|---|---|---|
| | | Q | $P_m$ | $P_m + P_b$ | $P_m + P_b + Q$ | |
| Hot Environment | 1 | 8.25E+02 | 1.76E+01 | 1.76E+01 | 8.70E+02 | |
| Cold Environment | 2a | 7.46E+02 | 1.76E+01 | 1.76E+01 | 7.63E+02 | |
| Cold Environment | 2b | 9.05E+01 | 1.76E+01 | 1.76E+01 | 1.08E+02 | |
| Minimum Ext. Press. | 3a | 8.52E+02 | 3.09E+01 | 3.09E+01 | 8.83E+02 | |
| Minimum Ext. Press. | 3b | 7.37E+02 | 3.09E+01 | 3.09E+01 | 7.68E+02 | |
| Increased Ext. Press. | 4a | 8.52E+02 | 8.32E+00 | 8.32E+00 | 8.61E+02 | |
| Increased Ext. Press. | 4b | 7.37E+02 | 8.32E+00 | 8.32E+00 | 7.45E+02 | |
| Vibration and Shock | 5a | 8.52E+02 | 4.51E+02 | 4.51E+02 | 1.30E+03 | 6.52E+02 |
| Vibration and Shock | 5b | 7.37E+02 | 4.51E+02 | 4.51E+02 | 1.19E+03 | 5.94E+02 |
| Vibration and Shock | 5c | 5.96E+01 | 4.51E+02 | 4.51E+02 | 5.11E+02 | 2.55E+02 |
| Free Drop - Top | 6a | 8.52E+02 | 4.23E+02 | 4.23E+02 | 1.28E+03 | |
| Free Drop - Top | 6b | 7.37E+02 | 4.23E+02 | 4.23E+02 | 1.16E+03 | |
| Free Drop - Top | 6c | 5.96E+01 | 4.23E+02 | 4.23E+02 | 4.83E+02 | |
| Free Drop - Side, 0 MER | 6a | 8.52E+02 | 2.65E+03 | 2.65E+03 | 3.50E+03 | |
| Free Drop - Side, 0 MER | 6b | 7.37E+02 | 2.65E+03 | 2.65E+03 | 3.39E+03 | |
| Free Drop - Side, 0 MER | 6c | 5.96E+01 | 2.65E+03 | 2.65E+03 | 2.71E+03 | |
| Free Drop - Side, 45 MER | 6a | 8.52E+02 | 1.94E+03 | 1.94E+03 | 2.79E+03 | |
| Free Drop - Side, 45 MER | 6b | 7.37E+02 | 1.94E+03 | 1.94E+03 | 2.68E+03 | |
| Free Drop - Side, 45 MER | 6c | 5.96E+01 | 1.94E+03 | 1.94E+03 | 2.00E+03 | |
| Maximum Stress Intensity | | 8.52E+02 | 2.65E+03 | 2.65E+03 | 3.50E+03 | |

NOTES:

1. Refer to Reference [2.2], corresponding Table 2.10.9.46A.
2. $P_m < S_m = 18.7$ ksi
   $P_m + P_b < 1.5 \cdot S_m = 28.1$ ksi
   $P_m + P_b + Q < 3.0 \cdot S_m = 56.1$ ksi
3. See Table 2.32 for combination index identification.
4. For combinations with Salt not listed, the number of load cycles are few and therefore, the fatigue qualifications are met.
5. MER = Meridian, angle of orientation from the contact edge where stresses are given.
6. Stresses are given at the centroid of the element, therefore, the same stress value is used for $P_m$ and $P_m + P_b$.

**Table 2.37. Summary of Stresses for Load Combinations Normal Conditions of Transport, Stress Point 5 (0.76 in. Wall Toroid)**

| Load Combination | Comb Index | Stress Intensity (psi) | | | | Fatigue Salt |
|---|---|---|---|---|---|---|
| | | Q | $P_m$ | $P_m + P_b$ | $P_m + P_b + Q$ | |
| Hot Environment | 1 | 2.12E+03 | 3.07E+00 | 3.07E+00 | 2.13E+03 | |
| Cold Environment | 2a | 2.24E+03 | 3.07E+00 | 3.07E+00 | 2.24E+03 | |
| Cold Environment | 2b | 3.19E+01 | 3.07E+00 | 3.07E+00 | 3.49E+01 | |
| Minimum Ext. Press. | 3a | 2.12E+03 | 1.13E+01 | 1.13E+01 | 2.14E+03 | |
| Minimum Ext. Press. | 3b | 2.21E+03 | 1.13E+01 | 1.13E+01 | 2.23E+03 | |
| Increased Ext. Press. | 4a | 2.12E+03 | 6.41E+00 | 6.41E+00 | 2.13E+03 | |
| Increased Ext. Press. | 4b | 2.21E+03 | 6.41E+00 | 6.41E+00 | 2.22E+03 | |
| Vibration and Shock | 5a | 2.12E+03 | 3.07E+02 | 3.07E+02 | 2.43E+03 | 1.22E+03 |
| Vibration and Shock | 5b | 2.21E+03 | 3.07E+02 | 3.07E+02 | 2.52E+03 | 1.26E+03 |
| Vibration and Shock | 5c | 2.74E+01 | 3.07E+02 | 3.07E+02 | 3.34E+02 | 1.67E+02 |
| Free Drop - Top | 6a | 2.12E+03 | 1.30E+02 | 1.30E+02 | 2.25E+03 | |
| Free Drop - Top | 6b | 2.21E+03 | 1.30E+02 | 1.30E+02 | 2.34E+03 | |
| Free Drop - Top | 6c | 2.74E+01 | 1.30E+02 | 1.30E+02 | 1.57E+02 | |
| Free Drop - Side, 0 MER | 6a | 2.12E+03 | 1.16E+03 | 1.16E+03 | 3.28E+03 | |
| Free Drop - Side, 0 MER | 6b | 2.21E+03 | 1.16E+03 | 1.16E+03 | 3.37E+03 | |
| Free Drop - Side, 0 MER | 6c | 2.74E+01 | 1.16E+03 | 1.16E+03 | 1.19E+03 | |
| Free Drop - Side, 45 MER | 6a | 2.12E+03 | 1.58E+02 | 1.58E+02 | 2.28E+03 | |
| Free Drop - Side, 45 MER | 6b | 2.21E+03 | 1.58E+02 | 1.58E+02 | 2.37E+03 | |
| Free Drop - Side, 45 MER | 6c | 2.74E+01 | 1.58E+02 | 1.58E+02 | 1.85E+02 | |
| Maximum Stress Intensity | | 2.24E+03 | 1.16E+03 | 1.16E+03 | 3.37E+03 | |

NOTES:

1. Refer to Reference [2.2], corresponding Table 2.10.9.47A.
2. $P_m < S_m = 18.7$ ksi
   $P_m + P_b < 1.5 \cdot S_m = 28.1$ ksi
   $P_m + P_b + Q < 3.0 \cdot S_m = 56.1$ ksi
3. See Table 2.32 for combination index identification.
4. For combinations with Salt not listed, the number of load cycles are few and therefore, the fatigue qualifications are met.
5. MER = Meridian, angle of orientation from the contact edge where stresses are given.
6. Stresses are given at the centroid of the element, therefore, the same stress value is used for $P_m$ and $P_m + P_b$.

**Table 2.38. Summary of Stresses for Load Combinations Normal Conditions of Transport, Stress Point 6 (0.76 in. Wall Toroid)**

| Load Combination | Comb Index | Stress Intensity (psi) | | | | Fatigue Salt |
|---|---|---|---|---|---|---|
| | | Q | $P_m$ | $P_m + P_b$ | $P_m + P_b + Q$ | |
| Hot Environment | 1 | 1.89E+03 | 7.86E+00 | 7.86E+00 | 1.90E+03 | |
| Cold Environment | 2a | 2.06E+03 | 7.86E+00 | 7.86E+00 | 2.07E+03 | |
| Cold Environment | 2b | 7.71E+01 | 7.86E+00 | 7.86E+00 | 8.49E+01 | |
| Minimum Ext. Press. | 3a | 1.89E+03 | 1.24E+01 | 1.24E+01 | 1.90E+03 | |
| Minimum Ext. Press. | 3b | 2.03E+03 | 1.24E+01 | 1.24E+01 | 2.04E+03 | |
| Increased Ext. Press. | 4a | 1.89E+03 | 9.27E+00 | 9.27E+00 | 1.90E+03 | |
| Increased Ext. Press. | 4b | 2.03E+03 | 9.27E+00 | 9.27E+00 | 2.04E+03 | |
| Vibration and Shock | 5a | 1.89E+03 | 3.43E+02 | 3.43E+02 | 2.24E+03 | 1.12E+03 |
| Vibration and Shock | 5b | 2.03E+03 | 3.43E+02 | 3.43E+02 | 2.37E+03 | 1.19E+03 |
| Vibration and Shock | 5c | 2.91E+01 | 3.43E+02 | 3.43E+02 | 3.72E+02 | 1.86E+02 |
| Free Drop - Top | 6a | 1.89E+03 | 7.58E+01 | 7.58E+01 | 1.97E+03 | |
| Free Drop - Top | 6b | 2.03E+03 | 7.58E+01 | 7.58E+01 | 2.10E+03 | |
| Free Drop - Top | 6c | 2.91E+01 | 7.58E+01 | 7.58E+01 | 1.05E+02 | |
| Free Drop - Side, 0 MER | 6a | 1.89E+03 | 1.77E+03 | 1.77E+03 | 3.66E+03 | |
| Free Drop - Side, 0 MER | 6b | 2.03E+03 | 1.77E+03 | 1.77E+03 | 3.80E+03 | |
| Free Drop - Side, 0 MER | 6c | 2.91E+01 | 1.77E+03 | 1.77E+03 | 1.80E+03 | |
| Free Drop - Side, 45 MER | 6a | 1.89E+03 | 6.91E+02 | 6.91E+02 | 2.58E+03 | |
| Free Drop - Side, 45 MER | 6b | 2.03E+03 | 6.91E+02 | 6.91E+02 | 2.72E+03 | |
| Free Drop - Side, 45 MER | 6c | 2.91E+01 | 6.91E+02 | 6.91E+02 | 7.20E+02 | |
| Maximum Stress Intensity | | 2.06E+03 | 1.77E+03 | 1.77E+03 | 3.80E+03 | |

NOTES:

1. Refer to Reference [2.2], corresponding Table 2.10.9.48A.
2. $P_m < S_m = 18.7$ ksi
   $P_m + P_b < 1.5 \cdot S_m = 28.1$ ksi
   $P_m + P_b + Q < 3.0 \cdot S_m = 56.1$ ksi
3. See Table 2.32 for combination index identification.
4. For combinations with Salt not listed, the number of load cycles are few and therefore, the fatigue qualifications are met.
5. MER = Meridian, angle of orientation from the contact edge where stresses are given.
6. Stresses are given at the centroid of the element, therefore, the same stress value is used for $P_m$ and $P_m + P_b$.

**Table 2.39. Summary of Stresses for Load Combinations Normal Conditions of Transport, Stress Point 7a (0.76 in. Wall Toroid)**

| Load Combination | Comb Index | Stress Intensity (psi) | | | | Fatigue Salt |
|---|---|---|---|---|---|---|
| | | Q | $P_m$ | $P_m + P_b$ | $P_m + P_b + Q$ | |
| Hot Environment | 1 | 2.19E+04 | 6.22E+01 | 1.00E+02 | 2.20E+04 | |
| Cold Environment | 2a | 1.51E+04 | 6.22E+01 | 1.00E+02 | 1.52E+04 | |
| Cold Environment | 2b | 1.39E+04 | 6.22E+01 | 1.00E+02 | 1.40E+04 | |
| Minimum Ext. Press. | 3a | 2.19E+04 | 1.07E+02 | 1.89E+02 | 2.21E+04 | |
| Minimum Ext. Press. | 3b | 1.66E+04 | 1.07E+02 | 1.89E+02 | 1.68E+04 | |
| Increased Ext. Press. | 4a | 2.19E+04 | 4.18E+01 | 5.92E+01 | 2.19E+04 | |
| Increased Ext. Press. | 4b | 1.66E+04 | 4.18E+01 | 5.92E+01 | 1.66E+04 | |
| Vibration and Shock | 5a | 2.19E+04 | 7.47E+02 | 5.37E+02 | 2.24E+04 | 1.12E+04 |
| Vibration and Shock | 5b | 1.66E+04 | 7.47E+02 | 5.37E+02 | 1.71E+04 | 8.56E+03 |
| Vibration and Shock | 5c | 1.21E+04 | 7.47E+02 | 5.37E+02 | 1.26E+04 | 6.31E+03 |
| Free Drop - Top | 6a | 2.19E+04 | 1.22E+03 | 1.10E+03 | 2.30E+04 | |
| Free Drop - Top | 6b | 1.66E+04 | 1.22E+03 | 1.10E+03 | 1.77E+04 | |
| Free Drop - Top | 6c | 1.24E+04 | 1.22E+03 | 1.10E+03 | 1.32E+04 | |
| Free Drop - Side, 0 MER | 6a | 2.19E+04 | 7.34E+03 | 1.09E+03 | 2.30E+04 | |
| Free Drop - Side, 0 MER | 6b | 1.66E+04 | 7.34E+03 | 1.09E+03 | 1.77E+04 | |
| Free Drop - Side, 0 MER | 6c | 1.21E+04 | 7.34E+03 | 1.09E+03 | 1.32E+04 | |
| Free Drop - Side, 45 MER | 6a | 2.19E+04 | 1.12E+04 | 1.31E+04 | 3.50E+04 | |
| Free Drop - Side, 45 MER | 6b | 1.66E+04 | 1.12E+04 | 1.31E+04 | 2.97E+04 | |
| Free Drop - Side, 45 MER | 6c | 1.21E+04 | 1.12E+04 | 1.31E+04 | 2.52E+04 | |
| Maximum Stress Intensity | | 2.19E+04 | 1.12E+04 | 1.31E+04 | 3.50E+04 | |

NOTES:

1. Refer to Reference [2.2], corresponding Table 2.10.9.49A.
2. $P_m < S_m = 18.7$ ksi
   $P_m + P_b < 1.5 \cdot S_m = 28.1$ ksi
   $P_m + P_b + Q < 3.0 \cdot S_m = 56.1$ ksi
3. See Table 2.32 for combination index identification.
4. For combinations with Salt not listed, the number of load cycles are few and therefore, the fatigue qualifications are met.
5. MER = Meridian, angle of orientation from the contact edge where stresses are given.

**Table 2.40. Summary of Stresses for Load Combinations Normal Conditions of Transport, Stress Point 7b (0.76 in. Wall Toroid)**

| Load Combination | Comb Index | Stress Intensity (psi) | | | | Fatigue Salt |
|---|---|---|---|---|---|---|
| | | Q | $P_m$ | $P_m + P_b$ | $P_m + P_b + Q$ | |
| Hot Environment | 1 | 1.43E+04 | 6.22E+01 | 3.93E+01 | 1.43E+04 | |
| Cold Environment | 2a | 1.10E+04 | 6.22E+01 | 3.93E+01 | 1.11E+04 | |
| Cold Environment | 2b | 6.54E+03 | 6.22E+01 | 3.93E+01 | 6.58E+03 | |
| Minimum Ext. Press. | 3a | 1.43E+04 | 1.07E+02 | 5.57E+01 | 1.43E+04 | |
| Minimum Ext. Press. | 3b | 1.13E+04 | 1.07E+02 | 5.57E+01 | 1.13E+04 | |
| Increased Ext. Press. | 4a | 1.43E+04 | 4.18E+01 | 3.04E+01 | 1.43E+04 | |
| Increased Ext. Press. | 4b | 1.13E+04 | 4.18E+01 | 3.04E+01 | 1.13E+04 | |
| Vibration and Shock | 5a | 1.43E+04 | 7.47E+02 | 1.33E+03 | 1.56E+04 | 7.79E+03 |
| Vibration and Shock | 5b | 1.13E+04 | 7.47E+02 | 1.33E+03 | 1.26E+04 | 6.31E+03 |
| Vibration and Shock | 5c | 6.19E+03 | 7.47E+02 | 1.33E+03 | 7.52E+03 | 3.76E+03 |
| Free Drop - Top | 6a | 1.43E+04 | 1.22E+03 | 1.36E+03 | 1.56E+04 | |
| Free Drop - Top | 6b | 1.13E+04 | 1.22E+03 | 1.36E+03 | 1.26E+04 | |
| Free Drop - Top | 6c | 6.19E+03 | 1.22E+03 | 1.36E+03 | 7.55E+03 | |
| Free Drop - Side, 0 MER | 6a | 1.43E+04 | 7.34E+03 | 1.78E+04 | 3.21E+04 | |
| Free Drop - Side, 0 MER | 6b | 1.13E+04 | 7.34E+03 | 1.78E+04 | 2.91E+04 | |
| Free Drop - Side, 0 MER | 6c | 6.19E+03 | 7.34E+03 | 1.78E+04 | 2.40E+04 | |
| Free Drop - Side, 45 MER | 6a | 1.43E+04 | 1.12E+04 | 9.84E+03 | 2.41E+04 | |
| Free Drop - Side, 45 MER | 6b | 1.13E+04 | 1.12E+04 | 9.84E+03 | 2.11E+04 | |
| Free Drop - Side, 45 MER | 6c | 6.19E+03 | 1.12E+04 | 9.84E+03 | 1.60E+04 | |
| Maximum Stress Intensity | | 1.43E+04 | 1.12E+04 | 1.78E+04 | 3.21E+04 | |

NOTES:

1. Refer to Reference [2.2], corresponding Table 2.10.9.50A.
2. $P_m < S_m = 18.7$ ksi
   $P_m + P_b < 1.5 \cdot S_m = 28.1$ ksi
   $P_m + P_b + Q < 3.0 \cdot S_m = 56.1$ ksi
3. See Table 2.32 for combination index identification.
4. For combinations with Salt not listed, the number of load cycles are few and therefore, the fatigue qualifications are met.
5. MER = Meridian, angle of orientation from the contact edge where stresses are given.

**Table 2.41. Summary of Stresses for Load Combinations Normal Conditions of Transport, Stress Point 8a (0.76 in. Wall Toroid)**

| Load Combination | Comb Index | Stress Intensity (psi) | | | | Fatigue Salt |
|---|---|---|---|---|---|---|
| | | Q | $P_m$ | $P_m + P_b$ | $P_m + P_b + Q$ | |
| Hot Environment | 1 | 9.59E+03 | 3.01E+01 | 4.32E+01 | 9.63E+03 | |
| Cold Environment | 2a | 3.14E+03 | 3.01E+01 | 4.32E+01 | 3.19E+03 | |
| Cold Environment | 2b | 4.06E+03 | 3.01E+01 | 4.32E+01 | 4.10E+03 | |
| Minimum Ext. Press. | 3a | 9.59E+03 | 5.58E+01 | 1.13E+02 | 9.70E+03 | |
| Minimum Ext. Press. | 3b | 3.67E+03 | 5.58E+01 | 1.13E+02 | 3.79E+03 | |
| Increased Ext. Press. | 4a | 9.59E+03 | 2.68E+01 | 1.73E+01 | 9.61E+03 | |
| Increased Ext. Press. | 4b | 3.67E+03 | 2.68E+01 | 1.73E+01 | 3.69E+03 | |
| Vibration and Shock | 5a | 9.59E+03 | 6.83E+02 | 1.08E+03 | 1.07E+04 | 5.34E+03 |
| Vibration and Shock | 5b | 3.67E+03 | 6.83E+02 | 1.08E+03 | 4.75E+03 | 2.38E+03 |
| Vibration and Shock | 5c | 3.25E+03 | 6.83E+02 | 1.08E+03 | 4.33E+03 | 2.16E+03 |
| Free Drop - Top | 6a | 9.59E+03 | 5.24E+03 | 6.92E+02 | 1.03E+04 | |
| Free Drop - Top | 6b | 3.67E+03 | 5.24E+03 | 6.92E+02 | 4.37E+03 | |
| Free Drop - Top | 6c | 3.25E+03 | 5.24E+03 | 6.92E+02 | 3.94E+03 | |
| Free Drop - Side, 0 MER | 6a | 9.59E+03 | 4.88E+03 | 1.27E+04 | 2.23E+04 | |
| Free Drop - Side, 0 MER | 6b | 3.67E+03 | 4.88E+03 | 1.27E+04 | 1.64E+04 | |
| Free Drop - Side, 0 MER | 6c | 3.25E+03 | 4.88E+03 | 1.27E+04 | 1.59E+04 | |
| Free Drop - Side, 45 MER | 6a | 9.59E+03 | 4.91E+03 | 8.46E+03 | 1.81E+04 | |
| Free Drop - Side, 45 MER | 6b | 3.67E+03 | 4.91E+03 | 8.46E+03 | 1.21E+04 | |
| Free Drop - Side, 45 MER | 6c | 3.25E+03 | 4.91E+03 | 8.46E+03 | 1.17E+04 | |
| Maximum Stress Intensity | | 9.59E+03 | 4.91E+03 | 1.27E+04 | 2.23E+04 | |

NOTES:

1. Refer to Reference [2.2], corresponding Table 2.10.9.51A.
2. $P_m < S_m = 18.7$ ksi
   $P_m + P_b < 1.5 \cdot S_m = 28.1$ ksi
   $P_m + P_b + Q < 3.0 \cdot S_m = 56.1$ ksi
3. See Table 2.32 for combination index identification.
4. For combinations with Salt not listed, the number of load cycles are few and therefore, the fatigue qualifications are met.
5. MER = Meridian, angle of orientation from the contact edge where stresses are given.
6. Stresses are given at the centroid of the element, therefore, the same stress value is used for $P_m$ and $P_m + P_b$.

**Table 2.42. Summary of Stresses for Load Combinations Normal Conditions of Transport, Stress Point 8b (0.76 in. Wall Toroid)**

| Load Combination | Comb Index | Stress Intensity (psi) | | | | Fatigue Salt |
|---|---|---|---|---|---|---|
| | | Q | $P_m$ | $P_m + P_b$ | $P_m + P_b + Q$ | |
| Hot Environment | 1 | 1.97E+04 | 3.01E+01 | 1.69E+01 | 1.97E+04 | |
| Cold Environment | 2a | 1.10E+04 | 3.01E+01 | 1.69E+01 | 1.10E+04 | |
| Cold Environment | 2b | 9.62E+03 | 3.01E+01 | 1.69E+01 | 9.63E+03 | |
| Minimum Ext. Press. | 3a | 1.97E+04 | 5.58E+01 | 6.52E+00 | 1.97E+04 | |
| Minimum Ext. Press. | 3b | 1.20E+04 | 5.58E+01 | 6.52E+00 | 1.20E+04 | |
| Increased Ext. Press. | 4a | 1.97E+04 | 2.68E+01 | 3.68E+01 | 1.97E+04 | |
| Increased Ext. Press. | 4b | 1.20E+04 | 2.68E+01 | 3.68E+01 | 1.20E+04 | |
| Vibration and Shock | 5a | 1.97E+04 | 6.83E+02 | 6.46E+02 | 2.03E+04 | 1.02E+04 |
| Vibration and Shock | 5b | 1.20E+04 | 6.83E+02 | 6.46E+02 | 1.26E+04 | 6.32E+03 |
| Vibration and Shock | 5c | 7.87E+03 | 6.83E+02 | 6.46E+02 | 8.51E+03 | 4.26E+03 |
| Free Drop - Top | 6a | 1.97E+04 | 5.24E+02 | 4.29E+02 | 2.01E+04 | |
| Free Drop - Top | 6b | 1.20E+04 | 5.24E+02 | 4.29E+02 | 1.24E+04 | |
| Free Drop - Top | 6c | 7.87E+03 | 5.24E+02 | 4.29E+02 | 8.30E+03 | |
| Free Drop - Side, 0 MER | 6a | 1.97E+04 | 4.88E+03 | 3.33E+03 | 2.03E+04 | |
| Free Drop - Side, 0 MER | 6b | 1.20E+04 | 4.88E+03 | 3.33E+03 | 1.53E+04 | |
| Free Drop - Side, 0 MER | 6c | 7.87E+03 | 4.88E+03 | 3.33E+03 | 1.12E+04 | |
| Free Drop - Side, 45 MER | 6a | 1.97E+04 | 4.91E+03 | 4.79E+03 | 2.45E+04 | |
| Free Drop - Side, 45 MER | 6b | 1.20E+04 | 4.91E+03 | 4.79E+03 | 1.68E+04 | |
| Free Drop - Side, 45 MER | 6c | 7.87E+03 | 4.91E+03 | 4.79E+03 | 1.27E+04 | |
| Maximum Stress Intensity | | 1.97E+04 | 4.91E+03 | 4.79E+03 | 2.45E+04 | |

NOTES:

1. Refer to Reference [2.2], corresponding Table 2.10.9.52A.
2. $P_m < S_m = 18.7$ ksi
   $P_m + P_b < 1.5 \cdot S_m = 28.1$ ksi
   $P_m + P_b + Q < 3.0 \cdot S_m = 56.1$ ksi
3. See Table 2.32 for combination index identification.
4. For combinations with Salt not listed, the number of load cycles are few and therefore, the fatigue qualifications are met.
5. MER = Meridian, angle of orientation from the contact edge where stresses are given.

**Table 2.43. Summary of Stresses for Load Combinations Normal Conditions of Transport, Stress Point 9a (0.76 in. Wall Toroid)**

| Load Combination | Comb Index | Stress Intensity (psi) | | | | Fatigue Salt |
|---|---|---|---|---|---|---|
| | | Q | $P_m$ | $P_m + P_b$ | $P_m + P_b + Q$ | |
| Hot Environment | 1 | 1.04E+04 | 1.33E+02 | 1.44E+02 | 1.06E+04 | |
| Cold Environment | 2a | 6.54E+03 | 1.33E+02 | 1.44E+02 | 6.69E+03 | |
| Cold Environment | 2b | 4.12E+03 | 1.33E+02 | 1.44E+02 | 4.26E+03 | |
| Minimum Ext. Press. | 3a | 1.04E+04 | 2.27E+02 | 2.44E+02 | 1.07E+04 | |
| Minimum Ext. Press. | 3b | 7.02E+03 | 2.27E+02 | 2.44E+02 | 7.26E+03 | |
| Increased Ext. Press. | 4a | 1.04E+04 | 8.96E+01 | 9.73E+01 | 1.05E+04 | |
| Increased Ext. Press. | 4b | 7.02E+03 | 8.96E+01 | 9.73E+01 | 7.12E+03 | |
| Vibration and Shock | 5a | 1.04E+04 | 7.33E+02 | 7.78E+02 | 1.12E+04 | 5.59E+03 |
| Vibration and Shock | 5b | 7.02E+03 | 7.33E+02 | 7.78E+02 | 7.80E+03 | 3.90E+03 |
| Vibration and Shock | 5c | 4.31E+03 | 7.33E+02 | 7.78E+02 | 5.09E+03 | 2.55E+03 |
| Free Drop - Top | 6a | 1.04E+04 | 1.58E+03 | 1.57E+03 | 1.20E+04 | |
| Free Drop - Top | 6b | 7.02E+03 | 1.58E+03 | 1.57E+03 | 8.59E+03 | |
| Free Drop - Top | 6c | 4.31E+03 | 1.58E+03 | 1.57E+03 | 5.88E+03 | |
| Free Drop - Side, 0 MER | 6a | 1.04E+04 | 3.06E+03 | 1.14E+03 | 1.15E+04 | |
| Free Drop - Side, 0 MER | 6b | 7.02E+03 | 3.06E+03 | 1.14E+03 | 8.16E+03 | |
| Free Drop - Side, 0 MER | 6c | 4.31E+03 | 3.06E+03 | 1.14E+03 | 5.45E+03 | |
| Free Drop - Side, 45 MER | 6a | 1.04E+04 | 7.79E+03 | 1.32E+04 | 2.36E+04 | |
| Free Drop - Side, 45 MER | 6b | 7.02E+03 | 7.79E+03 | 1.32E+04 | 2.02E+04 | |
| Free Drop - Side, 45 MER | 6c | 4.31E+03 | 7.79E+03 | 1.32E+04 | 1.75E+04 | |
| Maximum Stress Intensity | | 1.04E+04 | 7.79E+03 | 1.32E+04 | 2.36E+04 | |

NOTES:

1. Refer to Reference [2.2], corresponding Table 2.10.9.53A.
2. $P_m < S_m = 18.7$ ksi
   $P_m + P_b < 1.5 \cdot S_m = 28.1$ ksi
   $P_m + P_b + Q < 3.0 \cdot S_m = 56.1$ ksi
3. See Table 2.32 for combination index identification.
4. For combinations with Salt not listed, the number of load cycles are few and therefore, the fatigue qualifications are met.
5. MER = Meridian, angle of orientation from the contact edge where stresses are given.

**Table 2.44. Summary of Stresses for Load Combinations Normal Conditions of Transport, Stress Point 9b (0.76 in. Wall Toroid)**

| Load Combination | Comb Index | Stress Intensity (psi) | | | | Fatigue Salt |
|---|---|---|---|---|---|---|
| | | Q | $P_m$ | $P_m + P_b$ | $P_m + P_b + Q$ | |
| Hot Environment | 1 | 8.94E+03 | 1.33E+02 | 1.23E+02 | 9.06E+03 | |
| Cold Environment | 2a | 6.16E+03 | 1.33E+02 | 1.23E+02 | 6.29E+03 | |
| Cold Environment | 2b | 3.84E+03 | 1.33E+02 | 1.23E+02 | 3.96E+03 | |
| Minimum Ext. Press. | 3a | 8.94E+03 | 2.27E+02 | 2.10E+02 | 9.15E+03 | |
| Minimum Ext. Press. | 3b | 6.12E+03 | 2.27E+02 | 2.10E+02 | 6.33E+03 | |
| Increased Ext. Press. | 4a | 8.94E+03 | 8.96E+01 | 8.20E+01 | 9.02E+03 | |
| Increased Ext. Press. | 4b | 6.12E+03 | 8.96E+01 | 8.20E+01 | 6.20E+03 | |
| Vibration and Shock | 5a | 8.94E+03 | 7.33E+02 | 7.89E+02 | 9.73E+03 | 4.86E+03 |
| Vibration and Shock | 5b | 6.12E+03 | 7.33E+02 | 7.89E+02 | 6.91E+03 | 3.45E+03 |
| Vibration and Shock | 5c | 4.21E+03 | 7.33E+02 | 7.89E+02 | 5.00E+03 | 2.50E+03 |
| Free Drop - Top | 6a | 8.94E+03 | 1.58E+03 | 1.58E+03 | 1.05E+04 | |
| Free Drop - Top | 6b | 6.12E+03 | 1.58E+03 | 1.58E+03 | 7.70E+03 | |
| Free Drop - Top | 6c | 4.21E+03 | 1.58E+03 | 1.58E+03 | 5.79E+03 | |
| Free Drop - Side, 0 MER | 6a | 8.94E+03 | 3.06E+03 | 6.83E+03 | 1.58E+04 | |
| Free Drop - Side, 0 MER | 6b | 6.12E+03 | 3.06E+03 | 6.83E+03 | 1.29E+04 | |
| Free Drop - Side, 0 MER | 6c | 4.21E+03 | 3.06E+03 | 6.83E+03 | 1.10E+04 | |
| Free Drop - Side, 45 MER | 6a | 8.94E+03 | 7.79E+03 | 2.65E+03 | 1.16E+04 | |
| Free Drop - Side, 45 MER | 6b | 6.12E+03 | 7.79E+03 | 2.65E+03 | 8.77E+03 | |
| Free Drop - Side, 45 MER | 6c | 4.21E+03 | 7.79E+03 | 2.65E+03 | 6.86E+03 | |
| Maximum Stress Intensity | | 8.94E+03 | 7.79E+03 | 6.83E+03 | 1.58E+04 | |

NOTES:

1. Refer to Reference [2.2], corresponding Table 2.10.9.54A.
2. $P_m < S_m = 18.7$ ksi
   $P_m + P_b < 1.5 \cdot S_m = 28.1$ ksi
   $P_m + P_b + Q < 3.0 \cdot S_m = 56.1$ ksi
3. See Table 2.32 for combination index identification.
4. For combinations with Salt not listed, the number of load cycles are few and therefore, the fatigue qualifications are met.
5. MER = Meridian, angle of orientation from the contact edge where stresses are given.

**Table 2.45. Summary of Stresses for Load Combinations Normal Conditions of Transport, Stress Point 10a (0.76 in. Wall Toroid)**

| Load Combination | Comb Index | Stress Intensity (psi) | | | | Fatigue Salt |
|---|---|---|---|---|---|---|
| | | Q | $P_m$ | $P_m + P_b$ | $P_m + P_b + Q$ | |
| Hot Environment | 1 | 1.11E+04 | 6.06E+01 | 6.32E+01 | 1.11E+04 | |
| Cold Environment | 2a | 1.86E+03 | 6.06E+01 | 6.32E+01 | 1.93E+03 | |
| Cold Environment | 2b | 2.70E+02 | 6.06E+01 | 6.32E+01 | 3.33E+02 | |
| Minimum Ext. Press. | 3a | 1.11E+04 | 1.18E+02 | 1.24E+02 | 1.12E+04 | |
| Minimum Ext. Press. | 3b | 1.80E+03 | 1.18E+02 | 1.24E+02 | 1.92E+03 | |
| Increased Ext. Press. | 4a | 1.11E+04 | 3.56E+01 | 3.63E+01 | 1.11E+04 | |
| Increased Ext. Press. | 4b | 1.80E+03 | 3.56E+01 | 3.63E+01 | 1.83E+03 | |
| Vibration and Shock | 5a | 1.11E+04 | 8.52E+02 | 8.09E+02 | 1.19E+04 | 5.94E+03 |
| Vibration and Shock | 5b | 1.80E+03 | 8.52E+02 | 8.09E+02 | 2.61E+03 | 1.30E+03 |
| Vibration and Shock | 5c | 2.57E+02 | 8.52E+02 | 8.09E+02 | 1.07E+03 | 5.33E+02 |
| Free Drop - Top | 6a | 1.11E+04 | 1.28E+03 | 1.23E+03 | 1.23E+04 | |
| Free Drop - Top | 6b | 1.80E+03 | 1.28E+03 | 1.23E+03 | 3.03E+03 | |
| Free Drop - Top | 6c | 2.57E+02 | 1.28E+03 | 1.23E+03 | 1.49E+03 | |
| Free Drop - Side, 0 MER | 6a | 1.11E+04 | 7.37E+03 | 5.48E+03 | 1.66E+04 | |
| Free Drop - Side, 0 MER | 6b | 1.80E+03 | 7.37E+03 | 5.48E+03 | 7.28E+03 | |
| Free Drop - Side, 0 MER | 6c | 2.57E+02 | 7.37E+03 | 5.48E+03 | 5.74E+03 | |
| Free Drop - Side, 45 MER | 6a | 1.11E+04 | 7.75E+03 | 5.55E+03 | 1.66E+04 | |
| Free Drop - Side, 45 MER | 6b | 1.80E+03 | 7.75E+03 | 5.55E+03 | 7.35E+03 | |
| Free Drop - Side, 45 MER | 6c | 2.57E+02 | 7.75E+03 | 5.55E+03 | 5.81E+03 | |
| Maximum Stress Intensity | | 1.11E+04 | 7.75E+03 | 5.55E+03 | 1.66E+04 | |

NOTES:

1. Refer to Reference [2.2], corresponding Table 2.10.9.55A.
2. $P_m < S_m = 18.7$ ksi
   $P_m + P_b < 1.5 \cdot S_m = 28.1$ ksi
   $P_m + P_b + Q < 3.0 \cdot S_m = 56.1$ ksi
3. See Table 2.32 for combination index identification.
4. For combinations with Salt not listed, the number of load cycles are few and therefore, the fatigue qualifications are met.
5. MER = Meridian, angle of orientation from the contact edge where stresses are given.

**Table 2.46. Summary of Stresses for Load Combinations Normal Conditions of Transport, Stress Point 10b (0.76 in. Wall Toroid)**

| Load Combination | Comb Index | Stress Intensity (psi) | | | | Fatigue Salt |
|---|---|---|---|---|---|---|
| | | Q | $P_m$ | $P_m + P_b$ | $P_m + P_b + Q$ | |
| Hot Environment | 1 | 1.07E+04 | 6.06E+01 | 5.80E+01 | 1.07E+04 | |
| Cold Environment | 2a | 2.11E+03 | 6.06E+01 | 5.80E+01 | 2.16E+03 | |
| Cold Environment | 2b | 2.47E+02 | 6.06E+01 | 5.80E+01 | 3.05E+02 | |
| Minimum Ext. Press. | 3a | 1.07E+04 | 1.18E+02 | 1.13E+02 | 1.08E+04 | |
| Minimum Ext. Press. | 3b | 2.04E+03 | 1.18E+02 | 1.13E+02 | 2.16E+03 | |
| Increased Ext. Press. | 4a | 1.07E+04 | 3.56E+01 | 3.49E+01 | 1.07E+04 | |
| Increased Ext. Press. | 4b | 2.04E+03 | 3.56E+01 | 3.49E+01 | 2.08E+03 | |
| Vibration and Shock | 5a | 1.07E+04 | 8.52E+02 | 9.22E+02 | 1.16E+04 | 5.80E+03 |
| Vibration and Shock | 5b | 2.04E+03 | 8.52E+02 | 9.22E+02 | 2.97E+03 | 1.48E+03 |
| Vibration and Shock | 5c | 2.37E+02 | 8.52E+02 | 9.22E+02 | 1.16E+03 | 5.79E+02 |
| Free Drop - Top | 6a | 1.07E+04 | 1.28E+03 | 1.33E+03 | 1.20E+04 | |
| Free Drop - Top | 6b | 2.04E+03 | 1.28E+03 | 1.33E+03 | 3.37E+03 | |
| Free Drop - Top | 6c | 2.37E+02 | 1.28E+03 | 1.33E+03 | 1.57E+03 | |
| Free Drop - Side, 0 MER | 6a | 1.07E+04 | 7.37E+03 | 9.48E+03 | 2.01E+04 | |
| Free Drop - Side, 0 MER | 6b | 2.04E+03 | 7.37E+03 | 9.48E+03 | 1.15E+04 | |
| Free Drop - Side, 0 MER | 6c | 2.37E+02 | 7.37E+03 | 9.48E+03 | 9.72E+03 | |
| Free Drop - Side, 45 MER | 6a | 1.07E+04 | 7.75E+03 | 1.02E+04 | 2.09E+04 | |
| Free Drop - Side, 45 MER | 6b | 2.04E+03 | 7.75E+03 | 1.02E+04 | 1.22E+04 | |
| Free Drop - Side, 45 MER | 6c | 2.37E+02 | 7.75E+03 | 1.02E+04 | 1.04E+04 | |
| Maximum Stress Intensity | | 1.07E+04 | 7.75E+03 | 1.02E+04 | 2.09E+04 | |

NOTES:

1. Refer to Reference [2.2], corresponding Table 2.10.9.56A.
2. $P_m < S_m = 18.7$ ksi
   $P_m + P_b < 1.5 \cdot S_m = 28.1$ ksi
   $P_m + P_b + Q < 3.0 \cdot S_m = 56.1$ ksi
3. See Table 2.32 for combination index identification.
4. For combinations with Salt not listed, the number of load cycles are few and therefore, the fatigue qualifications are met.
5. MER = Meridian, angle of orientation from the contact edge where stresses are given.

**Table 2.47. Summary of Stresses for Load Combinations Normal Conditions of Transport, Stress Point 11a (0.76 in. Wall Toroid)**

| Load Combination | Comb Index | Stress Intensity (psi) | | | | Fatigue Salt |
|---|---|---|---|---|---|---|
| | | Q | $P_m$ | $P_m + P_b$ | $P_m + P_b + Q$ | |
| Hot Environment | 1 | 9.52E+03 | 1.31E+02 | 1.42E+02 | 9.66E+03 | |
| Cold Environment | 2a | 6.54E+03 | 1.31E+02 | 1.42E+02 | 6.88E+03 | |
| Cold Environment | 2b | 4.07E+03 | 1.31E+02 | 1.42E+02 | 4.22E+03 | |
| Minimum Ext. Press. | 3a | 9.52E+03 | 2.23E+02 | 2.40E+02 | 9.76E+03 | |
| Minimum Ext. Press. | 3b | 6.62E+03 | 2.23E+02 | 2.40E+02 | 6.86E+03 | |
| Increased Ext. Press. | 4a | 9.52E+03 | 8.80E+01 | 9.56E+01 | 9.62E+03 | |
| Increased Ext. Press. | 4b | 6.62E+03 | 8.80E+01 | 9.56E+01 | 6.72E+03 | |
| Vibration and Shock | 5a | 9.52E+03 | 7.45E+02 | 7.73E+02 | 1.03E+04 | 5.15E+03 |
| Vibration and Shock | 5b | 6.62E+03 | 7.45E+02 | 7.73E+02 | 7.40E+03 | 3.70E+03 |
| Vibration and Shock | 5c | 4.25E+03 | 7.45E+02 | 7.73E+02 | 5.02E+03 | 2.51E+03 |
| Free Drop - Top | 6a | 9.52E+03 | 2.12E+03 | 1.87E+03 | 1.14E+04 | |
| Free Drop - Top | 6b | 6.62E+03 | 2.12E+03 | 1.87E+03 | 8.49E+03 | |
| Free Drop - Top | 6c | 4.25E+03 | 2.12E+03 | 1.87E+03 | 6.12E+03 | |
| Free Drop - Side, 0 MER | 6a | 9.52E+03 | 3.75E+03 | 5.81E+02 | 1.01E+04 | |
| Free Drop - Side, 0 MER | 6b | 6.62E+03 | 3.75E+03 | 5.81E+02 | 7.20E+03 | |
| Free Drop - Side, 0 MER | 6c | 4.25E+03 | 3.75E+03 | 5.81E+02 | 4.83E+03 | |
| Free Drop - Side, 45 MER | 6a | 9.52E+03 | 9.34E+03 | 1.54E+04 | 2.49E+04 | |
| Free Drop - Side, 45 MER | 6b | 6.62E+03 | 9.34E+03 | 1.54E+04 | 2.20E+04 | |
| Free Drop - Side, 45 MER | 6c | 4.25E+03 | 9.34E+03 | 1.54E+04 | 1.96E+04 | |
| Maximum Stress Intensity | | 9.52E+03 | 9.34E+03 | 1.54E+04 | 2.49E+04 | |

NOTES:

1. Refer to Reference [2.2], corresponding Table 2.10.9.57A.
2. $P_m < S_m = 18.7$ ksi
   $P_m + P_b < 1.5 \cdot S_m = 28.1$ ksi
   $P_m + P_b + Q < 3.0 \cdot S_m = 56.1$ ksi
3. See Table 2.32 for combination index identification.
4. For combinations with Salt not listed, the number of load cycles are few and therefore, the fatigue qualifications are met.
5. MER = Meridian, angle of orientation from the contact edge where stresses are given.

**Table 2.48. Summary of Stresses for Load Combinations Normal Conditions of Transport, Stress Point 11b (0.76 in. Wall Toroid)**

| Load Combination | Comb Index | Stress Intensity (psi) | | | | Fatigue Salt |
|---|---|---|---|---|---|---|
| | | Q | $P_m$ | $P_m + P_b$ | $P_m + P_b + Q$ | |
| Hot Environment | 1 | 7.77E+03 | 1.31E+02 | 1.20E+02 | 7.89E+03 | |
| Cold Environment | 2a | 6.17E+03 | 1.31E+02 | 1.20E+02 | 6.29E+03 | |
| Cold Environment | 2b | 4.02E+03 | 1.31E+02 | 1.20E+02 | 4.14E+03 | |
| Minimum Ext. Press. | 3a | 7.77E+03 | 2.23E+02 | 2.06E+02 | 7.98E+03 | |
| Minimum Ext. Press. | 3b | 6.48E+03 | 2.23E+02 | 2.06E+02 | 6.69E+03 | |
| Increased Ext. Press. | 4a | 7.77E+03 | 8.80E+01 | 8.03E+01 | 7.85E+03 | |
| Increased Ext. Press. | 4b | 6.48E+03 | 8.80E+01 | 8.03E+01 | 6.56E+03 | |
| Vibration and Shock | 5a | 7.77E+03 | 7.45E+02 | 8.00E+02 | 8.57E+03 | 4.29E+03 |
| Vibration and Shock | 5b | 6.48E+03 | 7.45E+02 | 8.00E+02 | 7.28E+03 | 3.64E+03 |
| Vibration and Shock | 5c | 4.31E+03 | 7.45E+02 | 8.00E+02 | 5.11E+03 | 2.55E+03 |
| Free Drop - Top | 6a | 7.77E+03 | 2.12E+03 | 2.36E+03 | 1.01E+04 | |
| Free Drop - Top | 6b | 6.48E+03 | 2.12E+03 | 2.36E+03 | 8.84E+03 | |
| Free Drop - Top | 6c | 4.31E+03 | 2.12E+03 | 2.36E+03 | 6.67E+03 | |
| Free Drop - Side, 0 MER | 6a | 7.77E+03 | 3.75E+03 | 7.55E+03 | 1.53E+04 | |
| Free Drop - Side, 0 MER | 6b | 6.48E+03 | 3.75E+03 | 7.55E+03 | 1.40E+04 | |
| Free Drop - Side, 0 MER | 6c | 4.31E+03 | 3.75E+03 | 7.55E+03 | 1.19E+04 | |
| Free Drop - Side, 45 MER | 6a | 7.77E+03 | 9.34E+03 | 3.38E+03 | 1.12E+04 | |
| Free Drop - Side, 45 MER | 6b | 6.48E+03 | 9.34E+03 | 3.38E+03 | 9.86E+03 | |
| Free Drop - Side, 45 MER | 6c | 4.31E+03 | 9.34E+03 | 3.38E+03 | 7.69E+03 | |
| Maximum Stress Intensity | | 7.77E+03 | 9.34E+03 | 7.55E+03 | 1.53E+04 | |

NOTES:

1. Refer to Reference [2.2], corresponding Table 2.10.9.58A.
2. $P_m < S_m = 18.7$ ksi
   $P_m + P_b < 1.5 \cdot S_m = 28.1$ ksi
   $P_m + P_b + Q < 3.0 \cdot S_m = 56.1$ ksi
3. See Table 2.32 for combination index identification.
4. For combinations with Salt not listed, the number of load cycles are few and therefore, the fatigue qualifications are met.
5. MER = Meridian, angle of orientation from the contact edge where stresses are given.

**Table 2.49. Summary of Stresses for Load Combinations Normal Conditions of Transport, Stress Point 12a (0.76 in. Wall Toroid)**

| Load Combination | Comb Index | Stress Intensity (psi) | | | | Fatigue Salt |
|---|---|---|---|---|---|---|
| | | Q | $P_m$ | $P_m + P_b$ | $P_m + P_b + Q$ | |
| Hot Environment | 1 | 1.04E+04 | 5.88E+01 | 6.16E+01 | 1.05E+04 | |
| Cold Environment | 2a | 1.86E+03 | 5.88E+01 | 6.16E+01 | 1.92E+03 | |
| Cold Environment | 2b | 2.29E+02 | 5.88E+01 | 6.16E+01 | 2.91E+02 | |
| Minimum Ext. Press. | 3a | 1.04E+04 | 1.15E+02 | 1.21E+02 | 1.05E+04 | |
| Minimum Ext. Press. | 3b | 1.80E+03 | 1.15E+02 | 1.21E+02 | 1.92E+03 | |
| Increased Ext. Press. | 4a | 1.04E+04 | 3.44E+01 | 3.51E+01 | 1.04E+04 | |
| Increased Ext. Press. | 4b | 1.80E+03 | 3.44E+01 | 3.51E+01 | 1.83E+03 | |
| Vibration and Shock | 5a | 1.04E+04 | 8.49E+02 | 8.08E+02 | 1.12E+04 | 5.60E+03 |
| Vibration and Shock | 5b | 1.80E+03 | 8.49E+02 | 8.08E+02 | 2.61E+03 | 1.30E+03 |
| Vibration and Shock | 5c | 2.24E+02 | 8.49E+02 | 8.08E+02 | 1.03E+03 | 5.16E+02 |
| Free Drop - Top | 6a | 1.04E+04 | 4.52E+03 | 4.12E+03 | 1.45E+04 | |
| Free Drop - Top | 6b | 1.80E+03 | 4.52E+03 | 4.12E+03 | 5.92E+03 | |
| Free Drop - Top | 6c | 2.24E+02 | 4.52E+03 | 4.12E+03 | 4.34E+03 | |
| Free Drop - Side, 0 MER | 6a | 1.04E+04 | 7.81E+03 | 6.17E+03 | 1.66E+04 | |
| Free Drop - Side, 0 MER | 6b | 1.80E+03 | 7.81E+03 | 6.17E+03 | 7.97E+03 | |
| Free Drop - Side, 0 MER | 6c | 2.24E+02 | 7.81E+03 | 6.17E+03 | 6.39E+03 | |
| Free Drop - Side, 45 MER | 6a | 1.04E+04 | 8.08E+03 | 5.18E+03 | 1.56E+04 | |
| Free Drop - Side, 45 MER | 6b | 1.80E+03 | 8.08E+03 | 5.18E+03 | 6.98E+03 | |
| Free Drop - Side, 45 MER | 6c | 2.24E+02 | 8.08E+03 | 5.18E+03 | 5.40E+03 | |
| Maximum Stress Intensity | | 1.04E+04 | 8.08E+03 | 6.17E+03 | 1.66E+04 | |

NOTES:

1. Refer to Reference [2.2], corresponding Table 2.10.9.59A.
2. $P_m < S_m = 18.7$ ksi
   $P_m + P_b < 1.5 \cdot S_m = 28.1$ ksi
   $P_m + P_b + Q < 3.0 \cdot S_m = 56.1$ ksi
3. See Table 2.32 for combination index identification.
4. For combinations with Salt not listed, the number of load cycles are few and therefore, the fatigue qualifications are met.
5. MER = Meridian, angle of orientation from the contact edge where stresses are given.

**Table 2.50. Summary of Stresses for Load Combinations Normal Conditions of Transport, Stress Point 12b (0.76 in. Wall Toroid)**

| Load Combination | Comb Index | Stress Intensity (psi) | | | | Fatigue Salt |
|---|---|---|---|---|---|---|
| | | Q | $P_m$ | $P_m + P_b$ | $P_m + P_b + Q$ | |
| Hot Environment | 1 | 9.49E+03 | 5.88E+01 | 5.59E+01 | 9.54E+03 | |
| Cold Environment | 2a | 2.13E+03 | 5.88E+01 | 5.59E+01 | 2.19E+03 | |
| Cold Environment | 2b | 2.28E+02 | 5.88E+01 | 5.59E+01 | 2.83E+02 | |
| Minimum Ext. Press. | 3a | 9.49E+03 | 1.15E+02 | 1.09E+02 | 9.60E+03 | |
| Minimum Ext. Press. | 3b | 2.07E+03 | 1.15E+02 | 1.09E+02 | 2.18E+03 | |
| Increased Ext. Press. | 4a | 9.49E+03 | 3.44E+01 | 3.36E+01 | 9.52E+03 | |
| Increased Ext. Press. | 4b | 2.07E+03 | 3.44E+01 | 3.36E+01 | 2.10E+03 | |
| Vibration and Shock | 5a | 9.49E+03 | 8.49E+02 | 9.16E+02 | 1.04E+04 | 5.20E+03 |
| Vibration and Shock | 5b | 2.07E+03 | 8.49E+02 | 9.16E+02 | 2.98E+03 | 1.49E+03 |
| Vibration and Shock | 5c | 2.23E+02 | 8.49E+02 | 9.16E+02 | 1.14E+03 | 5.70E+02 |
| Free Drop - Top | 6a | 9.49E+03 | 4.52E+03 | 4.92E+03 | 1.44E+04 | |
| Free Drop - Top | 6b | 2.07E+03 | 4.52E+03 | 4.92E+03 | 6.99E+03 | |
| Free Drop - Top | 6c | 2.23E+02 | 4.52E+03 | 4.92E+03 | 5.14E+03 | |
| Free Drop - Side, 0 MER | 6a | 9.49E+03 | 7.81E+03 | 9.66E+03 | 1.91E+04 | |
| Free Drop - Side, 0 MER | 6b | 2.07E+03 | 7.81E+03 | 9.66E+03 | 1.17E+04 | |
| Free Drop - Side, 0 MER | 6c | 2.23E+02 | 7.81E+03 | 9.66E+03 | 9.88E+03 | |
| Free Drop - Side, 45 MER | 6a | 9.49E+03 | 8.08E+03 | 1.11E+04 | 2.06E+04 | |
| Free Drop - Side, 45 MER | 6b | 2.07E+03 | 8.08E+03 | 1.11E+04 | 1.32E+04 | |
| Free Drop - Side, 45 MER | 6c | 2.23E+02 | 8.08E+03 | 1.11E+04 | 1.13E+04 | |
| Maximum Stress Intensity | | 9.49E+03 | 8.08E+03 | 1.11E+04 | 2.06E+04 | |

NOTES:

1. Refer to Reference [2.2], corresponding Table 2.10.9.60A.
2. $P_m < S_m = 18.7$ ksi
   $P_m + P_b < 1.5 \cdot S_m = 28.1$ ksi
   $P_m + P_b + Q < 3.0 \cdot S_m = 56.1$ ksi
3. See Table 2.32 for combination index identification.
4. For combinations with Salt not listed, the number of load cycles are few and therefore, the fatigue qualifications are met.
5. MER = Meridian, angle of orientation from the contact edge where stresses are given.

**Table 2.51. Summary of Stresses for Load Combinations Normal Conditions of Transport, Stress Point 13a (0.76 in. Wall Toroid)**

| Load Combination | Comb Index | Stress Intensity (psi) | | | | Fatigue Salt |
|---|---|---|---|---|---|---|
| | | Q | $P_m$ | $P_m + P_b$ | $P_m + P_b + Q$ | |
| Hot Environment | 1 | 1.08E+04 | 1.34E+02 | 1.44E+02 | 1.09E+04 | |
| Cold Environment | 2a | 6.61E+03 | 1.34E+02 | 1.44E+02 | 6.76E+03 | |
| Cold Environment | 2b | 4.03E+03 | 1.34E+02 | 1.44E+02 | 4.17E+03 | |
| Minimum Ext. Press. | 3a | 1.08E+04 | 2.28E+02 | 2.44E+02 | 1.10E+04 | |
| Minimum Ext. Press. | 3b | 6.86E+03 | 2.28E+02 | 2.44E+02 | 7.11E+03 | |
| Increased Ext. Press. | 4a | 1.08E+04 | 8.97E+01 | 9.70E+01 | 1.09E+04 | |
| Increased Ext. Press. | 4b | 6.86E+03 | 8.97E+01 | 9.70E+01 | 6.96E+03 | |
| Vibration and Shock | 5a | 1.08E+04 | 7.53E+02 | 8.22E+02 | 1.16E+04 | 5.81E+03 |
| Vibration and Shock | 5b | 6.86E+03 | 7.53E+02 | 8.22E+02 | 7.69E+03 | 3.84E+03 |
| Vibration and Shock | 5c | 4.25E+03 | 7.53E+02 | 8.22E+02 | 5.07E+03 | 2.54E+03 |
| Free Drop - Top | 6a | 1.08E+04 | 5.93E+03 | 5.65E+03 | 1.65E+04 | |
| Free Drop - Top | 6b | 6.86E+03 | 5.93E+03 | 5.65E+03 | 1.25E+04 | |
| Free Drop - Top | 6c | 4.25E+03 | 5.93E+03 | 5.65E+03 | 9.90E+03 | |
| Free Drop - Side, 0 MER | 6a | 1.08E+04 | 2.30E+03 | 2.61E+03 | 1.34E+04 | |
| Free Drop - Side, 0 MER | 6b | 6.86E+03 | 2.30E+03 | 2.61E+03 | 9.47E+03 | |
| Free Drop - Side, 0 MER | 6c | 4.25E+03 | 2.30E+03 | 2.61E+03 | 6.86E+03 | |
| Free Drop - Side, 45 MER | 6a | 1.08E+04 | 8.73E+03 | 1.31E+04 | 2.39E+04 | |
| Free Drop - Side, 45 MER | 6b | 6.86E+03 | 8.73E+03 | 1.31E+04 | 2.00E+04 | |
| Free Drop - Side, 45 MER | 6c | 4.25E+03 | 8.73E+03 | 1.31E+04 | 1.74E+04 | |
| Maximum Stress Intensity | | 1.08E+04 | 8.73E+03 | 1.31E+04 | 2.39E+04 | |

NOTES:

1. Refer to Reference [2.2], corresponding Table 2.10.9.61A.
2. $P_m < S_m = 18.7$ ksi
   $P_m + P_b < 1.5 \cdot S_m = 28.1$ ksi
   $P_m + P_b + Q < 3.0 \cdot S_m = 56.1$ ksi
3. See Table 2.32 for combination index identification.
4. For combinations with Salt not listed, the number of load cycles are few and therefore, the fatigue qualifications are met.
5. MER = Meridian, angle of orientation from the contact edge where stresses are given.

**Table 2.52. Summary of Stresses for Load Combinations Normal Conditions of Transport, Stress Point 13b (0.76 in. Wall Toroid)**

| Load Combination | Comb Index | Stress Intensity (psi) | | | | Fatigue Salt |
|---|---|---|---|---|---|---|
| | | Q | $P_m$ | $P_m + P_b$ | $P_m + P_b + Q$ | |
| Hot Environment | 1 | 9.28E+03 | 1.34E+02 | 1.25E+02 | 9.40E+03 | |
| Cold Environment | 2a | 6.13E+03 | 1.34E+02 | 1.25E+02 | 6.25E+03 | |
| Cold Environment | 2b | 4.00E+03 | 1.34E+02 | 1.25E+02 | 4.12E+03 | |
| Minimum Ext. Press. | 3a | 9.28E+03 | 2.28E+02 | 2.13E+02 | 9.49E+03 | |
| Minimum Ext. Press. | 3b | 6.12E+03 | 2.28E+02 | 2.13E+02 | 6.34E+03 | |
| Increased Ext. Press. | 4a | 9.28E+03 | 8.97E+01 | 8.23E+01 | 9.36E+03 | |
| Increased Ext. Press. | 4b | 6.12E+03 | 8.97E+01 | 8.23E+01 | 6.21E+03 | |
| Vibration and Shock | 5a | 9.28E+03 | 7.53E+02 | 7.18E+02 | 9.99E+03 | 5.00E+03 |
| Vibration and Shock | 5b | 6.12E+03 | 7.53E+02 | 7.18E+02 | 6.84E+03 | 3.42E+03 |
| Vibration and Shock | 5c | 4.42E+03 | 7.53E+02 | 7.18E+02 | 5.13E+03 | 2.57E+03 |
| Free Drop - Top | 6a | 9.28E+03 | 5.93E+03 | 6.20E+03 | 1.55E+04 | |
| Free Drop - Top | 6b | 6.12E+03 | 5.93E+03 | 6.20E+03 | 1.23E+04 | |
| Free Drop - Top | 6c | 4.42E+03 | 5.93E+03 | 6.20E+03 | 1.06E+04 | |
| Free Drop - Side, 0 MER | 6a | 9.28E+03 | 2.30E+03 | 4.04E+03 | 1.33E+04 | |
| Free Drop - Side, 0 MER | 6b | 6.12E+03 | 2.30E+03 | 4.04E+03 | 1.02E+04 | |
| Free Drop - Side, 0 MER | 6c | 4.42E+03 | 2.30E+03 | 4.04E+03 | 8.46E+03 | |
| Free Drop - Side, 45 MER | 6a | 9.28E+03 | 8.73E+03 | 4.86E+03 | 1.41E+04 | |
| Free Drop - Side, 45 MER | 6b | 6.12E+03 | 8.73E+03 | 4.86E+03 | 1.10E+04 | |
| Free Drop - Side, 45 MER | 6c | 4.42E+03 | 8.73E+03 | 4.86E+03 | 9.28E+03 | |
| Maximum Stress Intensity | | 9.28E+03 | 8.73E+03 | 6.20E+03 | 1.55E+04 | |

NOTES:

1. Refer to Reference [2.2], corresponding Table 2.10.9.62A.
2. $P_m < S_m = 18.7$ ksi
   $P_m + P_b < 1.5 \cdot S_m = 28.1$ ksi
   $P_m + P_b + Q < 3.0 \cdot S_m = 56.1$ ksi
3. See Table 2.32 for combination index identification.
4. For combinations with Salt not listed, the number of load cycles are few and therefore, the fatigue qualifications are met.
5. MER = Meridian, angle of orientation from the contact edge where stresses are given.

**Table 2.53. Summary of Stresses for Load Combinations Normal Conditions of Transport, Stress Point 14a (0.76 in. Wall Toroid)**

| Load Combination | Comb Index | Stress Intensity (psi) | | | | Fatigue Salt |
|---|---|---|---|---|---|---|
| | | Q | $P_m$ | $P_m + P_b$ | $P_m + P_b + Q$ | |
| Hot Environment | 1 | 1.16E+04 | 6.12E+01 | 6.36E+01 | 1.16E+04 | |
| Cold Environment | 2a | 1.96E+03 | 6.12E+01 | 6.36E+01 | 2.03E+03 | |
| Cold Environment | 2b | 2.46E+02 | 6.12E+01 | 6.36E+01 | 3.09E+02 | |
| Minimum Ext. Press. | 3a | 1.16E+04 | 1.19E+02 | 1.24E+02 | 1.17E+04 | |
| Minimum Ext. Press. | 3b | 1.89E+03 | 1.19E+02 | 1.24E+02 | 2.02E+03 | |
| Increased Ext. Press. | 4a | 1.16E+04 | 3.56E+01 | 3.63E+01 | 1.16E+04 | |
| Increased Ext. Press. | 4b | 1.89E+03 | 3.56E+01 | 3.63E+01 | 1.93E+03 | |
| Vibration and Shock | 5a | 1.16E+04 | 8.31E+02 | 8.28E+02 | 1.24E+04 | 6.20E+03 |
| Vibration and Shock | 5b | 1.89E+03 | 8.31E+02 | 8.28E+02 | 2.72E+03 | 1.36E+03 |
| Vibration and Shock | 5c | 2.33E+02 | 8.31E+02 | 8.28E+02 | 1.06E+03 | 5.30E+02 |
| Free Drop - Top | 6a | 1.16E+04 | 1.06E+04 | 1.01E+04 | 2.17E+04 | |
| Free Drop - Top | 6b | 1.89E+03 | 1.06E+04 | 1.01E+04 | 1.20E+04 | |
| Free Drop - Top | 6c | 2.33E+02 | 1.06E+04 | 1.01E+04 | 1.03E+04 | |
| Free Drop - Side, 0 MER | 6a | 1.16E+04 | 5.64E+03 | 3.59E+03 | 1.52E+04 | |
| Free Drop - Side, 0 MER | 6b | 1.89E+03 | 5.64E+03 | 3.59E+03 | 5.48E+03 | |
| Free Drop - Side, 0 MER | 6c | 2.33E+02 | 5.64E+03 | 3.59E+03 | 3.82E+03 | |
| Free Drop - Side, 45 MER | 6a | 1.16E+04 | 8.94E+03 | 7.73E+03 | 1.93E+04 | |
| Free Drop - Side, 45 MER | 6b | 1.89E+03 | 8.94E+03 | 7.73E+03 | 9.62E+03 | |
| Free Drop - Side, 45 MER | 6c | 2.33E+02 | 8.94E+03 | 7.73E+03 | 7.96E+03 | |
| Maximum Stress Intensity | | 1.16E+04 | 1.06E+04 | 1.01E+04 | 2.17E+04 | |

NOTES:

1. Refer to Reference [2.2], corresponding Table 2.10.9.63A.
2. $P_m < S_m = 18.7$ ksi
   $P_m + P_b < 1.5 \cdot S_m = 28.1$ ksi
   $P_m + P_b + Q < 3.0 \cdot S_m = 56.1$ ksi
3. See Table 2.32 for combination index identification.
4. For combinations with Salt not listed, the number of load cycles are few and therefore, the fatigue qualifications are met.
5. MER = Meridian, angle of orientation from the contact edge where stresses are given.

**Table 2.54. Summary of Stresses for Load Combinations Normal Conditions of Transport, Stress Point 14b (0.76 in. Wall Toroid)**

| Load Combination | Comb Index | Stress Intensity (psi) | | | | Fatigue Salt |
|---|---|---|---|---|---|---|
| | | Q | $P_m$ | $P_m + P_b$ | $P_m + P_b + Q$ | |
| Hot Environment | 1 | 1.10E+04 | 6.12E+01 | 5.88E+01 | 1.11E+04 | |
| Cold Environment | 2a | 2.02E+03 | 6.12E+01 | 5.88E+01 | 2.08E+03 | |
| Cold Environment | 2b | 2.34E+02 | 6.12E+01 | 5.88E+01 | 2.92E+02 | |
| Minimum Ext. Press. | 3a | 1.10E+04 | 1.19E+02 | 1.13E+02 | 1.12E+04 | |
| Minimum Ext. Press. | 3b | 1.98E+03 | 1.19E+02 | 1.13E+02 | 2.09E+03 | |
| Increased Ext. Press. | 4a | 1.10E+04 | 3.56E+01 | 3.49E+01 | 1.11E+04 | |
| Increased Ext. Press. | 4b | 1.98E+03 | 3.56E+01 | 3.49E+01 | 2.01E+03 | |
| Vibration and Shock | 5a | 1.10E+04 | 8.31E+02 | 8.70E+02 | 1.19E+04 | 5.96E+03 |
| Vibration and Shock | 5b | 1.98E+03 | 8.31E+02 | 8.70E+02 | 2.85E+03 | 1.42E+03 |
| Vibration and Shock | 5c | 2.25E+02 | 8.31E+02 | 8.70E+02 | 1.10E+03 | 5.48E+02 |
| Free Drop - Top | 6a | 1.10E+04 | 1.06E+04 | 1.11E+04 | 2.21E+04 | |
| Free Drop - Top | 6b | 1.98E+03 | 1.06E+04 | 1.11E+04 | 1.31E+04 | |
| Free Drop - Top | 6c | 2.25E+02 | 1.06E+04 | 1.11E+04 | 1.13E+04 | |
| Free Drop - Side, 0 MER | 6a | 1.10E+04 | 5.64E+03 | 7.98E+04 | 1.90E+04 | |
| Free Drop - Side, 0 MER | 6b | 1.98E+03 | 5.64E+03 | 7.98E+04 | 9.96E+03 | |
| Free Drop - Side, 0 MER | 6c | 2.25E+02 | 5.64E+03 | 7.98E+04 | 8.21E+03 | |
| Free Drop - Side, 45 MER | 6a | 1.10E+04 | 8.94E+03 | 1.05E+04 | 2.15E+04 | |
| Free Drop - Side, 45 MER | 6b | 1.98E+03 | 8.94E+03 | 1.05E+04 | 1.25E+04 | |
| Free Drop - Side, 45 MER | 6c | 2.25E+02 | 8.94E+03 | 1.05E+04 | 1.07E+04 | |
| Maximum Stress Intensity | | 1.10E+04 | 1.06E+04 | 1.11E+04 | 2.21E+04 | |

NOTES:

1. Refer to Reference [2.2], corresponding Table 2.10.9.64A.
2. $P_m < S_m = 18.7$ ksi
   $P_m + P_b < 1.5 \cdot S_m = 28.1$ ksi
   $P_m + P_b + Q < 3.0 \cdot S_m = 56.1$ ksi
3. See Table 2.32 for combination index identification.
4. For combinations with Salt not listed, the number of load cycles are few and therefore, the fatigue qualifications are met.
5. MER = Meridian, angle of orientation from the contact edge where stresses are given.

**Table 2.55. Summary of Stresses for Load Combinations Normal Conditions of Transport, Stress Point 15a (0.76 in. Wall Toroid)**

| Load Combination | Comb Index | Stress Intensity (psi) | | | | Fatigue Salt |
|---|---|---|---|---|---|---|
| | | Q | $P_m$ | $P_m + P_b$ | $P_m + P_b + Q$ | |
| Hot Environment | 1 | 6.87E+03 | 4.51E+01 | 8.90E+01 | 6.96E+03 | |
| Cold Environment | 2a | 5.79E+03 | 4.51E+01 | 8.90E+01 | 5.88E+03 | |
| Cold Environment | 2b | 5.37E+03 | 4.51E+01 | 8.90E+01 | 5.46E+03 | |
| Minimum Ext. Press. | 3a | 6.87E+03 | 8.24E+01 | 1.43E+02 | 7.02E+03 | |
| Minimum Ext. Press. | 3b | 5.59E+03 | 8.24E+01 | 1.43E+02 | 5.73E+03 | |
| Increased Ext. Press. | 4a | 6.87E+03 | 2.73E+01 | 4.37E+01 | 6.92E+03 | |
| Increased Ext. Press. | 4b | 5.59E+03 | 2.73E+01 | 4.37E+01 | 5.63E+03 | |
| Vibration and Shock | 5a | 6.87E+03 | 1.13E+03 | 9.07E+02 | 7.78E+03 | 3.89E+03 |
| Vibration and Shock | 5b | 5.59E+03 | 1.13E+03 | 9.07E+02 | 6.49E+03 | 3.25E+03 |
| Vibration and Shock | 5c | 5.31E+03 | 1.13E+03 | 9.07E+02 | 6.22E+03 | 3.11E+03 |
| Free Drop - Top | 6a | 6.87E+03 | 6.31E+03 | 7.42E+03 | 1.43E+04 | |
| Free Drop - Top | 6b | 5.59E+03 | 6.31E+03 | 7.42E+03 | 1.30E+04 | |
| Free Drop - Top | 6c | 5.31E+03 | 6.31E+03 | 7.42E+03 | 1.27E+04 | |
| Free Drop - Side, 0 MER | 6a | 6.87E+03 | 1.33E+04 | 7.14E+03 | 1.40E+04 | |
| Free Drop - Side, 0 MER | 6b | 5.59E+03 | 1.33E+04 | 7.14E+03 | 1.27E+04 | |
| Free Drop - Side, 0 MER | 6c | 5.31E+03 | 1.33E+04 | 7.14E+03 | 1.24E+04 | |
| Free Drop - Side, 45 MER | 6a | 6.87E+03 | 1.15E+04 | 1.14E+04 | 1.83E+04 | |
| Free Drop - Side, 45 MER | 6b | 5.59E+03 | 1.15E+04 | 1.14E+04 | 1.70E+04 | |
| Free Drop - Side, 45 MER | 6c | 5.31E+03 | 1.15E+04 | 1.14E+04 | 1.67E+04 | |
| Maximum Stress Intensity | | 6.87E+03 | 1.33E+04 | 1.14E+04 | 1.83E+04 | |

NOTES:

1. Refer to Reference [2.2], corresponding Table 2.10.9.65A.
2. $P_m < S_m = 18.7$ ksi
   $P_m + P_b < 1.5 \cdot S_m = 28.1$ ksi
   $P_m + P_b + Q < 3.0 \cdot S_m = 56.1$ ksi
3. See Table 2.32 for combination index identification.
4. For combinations with Salt not listed, the number of load cycles are few and therefore, the fatigue qualifications are met.
5. MER = Meridian, angle of orientation from the contact edge where stresses are given.

**Table 2.56. Summary of Stresses for Load Combinations Normal Conditions of Transport, Stress Point 15b (0.76 in. Wall Toroid)**

| Load Combination | Comb Index | Stress Intensity (psi) | | | | Fatigue Salt |
|---|---|---|---|---|---|---|
| | | Q | $P_m$ | $P_m + P_b$ | $P_m + P_b + Q$ | |
| Hot Environment | 1 | 3.27E+03 | 4.51E+01 | 1.25E+01 | 3.28E+03 | |
| Cold Environment | 2a | 8.73E+03 | 4.51E+01 | 1.25E+01 | 8.74E+03 | |
| Cold Environment | 2b | 4.91E+03 | 4.51E+01 | 1.25E+01 | 4.92E+03 | |
| Minimum Ext. Press. | 3a | 3.27E+03 | 8.24E+01 | 2.50E+01 | 3.29E+03 | |
| Minimum Ext. Press. | 3b | 9.33E+03 | 8.24E+01 | 2.50E+01 | 9.35E+03 | |
| Increased Ext. Press. | 4a | 3.27E+03 | 2.73E+01 | 1.09E+01 | 3.28E+03 | |
| Increased Ext. Press. | 4b | 9.33E+03 | 2.73E+01 | 1.09E+01 | 9.34E+03 | |
| Vibration and Shock | 5a | 3.27E+03 | 1.13E+03 | 1.85E+03 | 5.12E+03 | 2.56E+03 |
| Vibration and Shock | 5b | 9.33E+03 | 1.13E+03 | 1.85E+03 | 1.12E+04 | 5.59E+03 |
| Vibration and Shock | 5c | 4.89E+03 | 1.13E+03 | 1.85E+03 | 6.74E+03 | 3.37E+03 |
| Free Drop - Top | 6a | 3.27E+03 | 6.31E+03 | 5.21E+03 | 8.48E+03 | |
| Free Drop - Top | 6b | 9.33E+03 | 6.31E+03 | 5.21E+03 | 1.45E+04 | |
| Free Drop - Top | 6c | 4.89E+03 | 6.31E+03 | 5.21E+03 | 1.01E+04 | |
| Free Drop - Side, 0 MER | 6a | 3.27E+03 | 1.33E+04 | 2.48E+04 | 2.81E+04 | |
| Free Drop - Side, 0 MER | 6b | 9.33E+03 | 1.33E+04 | 2.48E+04 | 3.41E+04 | |
| Free Drop - Side, 0 MER | 6c | 4.89E+03 | 1.33E+04 | 2.48E+04 | 2.97E+04 | |
| Free Drop - Side, 45 MER | 6a | 3.27E+03 | 1.15E+04 | 1.22E+04 | 1.55E+04 | |
| Free Drop - Side, 45 MER | 6b | 9.33E+03 | 1.15E+04 | 1.22E+04 | 2.15E+04 | |
| Free Drop - Side, 45 MER | 6c | 4.89E+03 | 1.15E+04 | 1.22E+04 | 1.71E+04 | |
| Maximum Stress Intensity | | 9.33E+03 | 1.33E+04 | 2.48E+04 | 3.41E+04 | |

NOTES:

1. Refer to Reference [2.2], corresponding Table 2.10.9.66A.
2. $P_m < S_m = 18.7$ ksi
   $P_m + P_b < 1.5 \cdot S_m = 28.1$ ksi
   $P_m + P_b + Q < 3.0 \cdot S_m = 56.1$ ksi
3. See Table 2.32 for combination index identification.
4. For combinations with Salt not listed, the number of load cycles are few and therefore, the fatigue qualifications are met.
5. MER = Meridian, angle of orientation from the contact edge where stresses are given.

**Table 2.57. Summary of Stresses for Load Combinations Normal Conditions of Transport, Stress Point 16a (0.76 in. Wall Toroid)**

| Load Combination | Comb Index | Stress Intensity (psi) | | | | Fatigue Salt |
|---|---|---|---|---|---|---|
| | | Q | $P_m$ | $P_m + P_b$ | $P_m + P_b + Q$ | |
| Hot Environment | 1 | 1.64E+04 | 3.42E+01 | 6.34E+01 | 1.65E+04 | |
| Cold Environment | 2a | 4.98E+03 | 3.42E+01 | 6.34E+01 | 5.04E+03 | |
| Cold Environment | 2b | 3.21E+03 | 3.42E+01 | 6.34E+01 | 3.28E+03 | |
| Minimum Ext. Press. | 3a | 1.64E+04 | 6.80E+01 | 1.28E+02 | 1.66E+04 | |
| Minimum Ext. Press. | 3b | 5.29E+03 | 6.80E+01 | 1.28E+02 | 5.42E+03 | |
| Increased Ext. Press. | 4a | 1.64E+04 | 1.81E+01 | 2.59E+01 | 1.65E+04 | |
| Increased Ext. Press. | 4b | 5.29E+03 | 1.81E+01 | 2.59E+01 | 5.32E+03 | |
| Vibration and Shock | 5a | 1.64E+04 | 7.37E+02 | 7.38E+02 | 1.72E+04 | 8.58E+03 |
| Vibration and Shock | 5b | 5.29E+03 | 7.37E+02 | 7.38E+02 | 6.03E+03 | 3.02E+03 |
| Vibration and Shock | 5c | 2.60E+03 | 7.37E+02 | 7.38E+02 | 3.34E+03 | 1.67E+03 |
| Free Drop - Top | 6a | 1.64E+04 | 6.91E+03 | 4.53E+03 | 2.10E+04 | |
| Free Drop - Top | 6b | 5.29E+03 | 6.91E+03 | 4.53E+03 | 9.82E+03 | |
| Free Drop - Top | 6c | 2.60E+03 | 6.91E+03 | 4.53E+03 | 7.13E+03 | |
| Free Drop - Side, 0 MER | 6a | 1.64E+04 | 2.55E+03 | 7.60E+03 | 2.40E+04 | |
| Free Drop - Side, 0 MER | 6b | 5.29E+03 | 2.55E+03 | 7.60E+03 | 1.29E+04 | |
| Free Drop - Side, 0 MER | 6c | 2.60E+03 | 2.55E+03 | 7.60E+03 | 1.02E+04 | |
| Free Drop - Side, 45 MER | 6a | 1.64E+04 | 6.44E+03 | 7.18E+03 | 2.36E+04 | |
| Free Drop - Side, 45 MER | 6b | 5.29E+03 | 6.44E+03 | 7.18E+03 | 1.25E+04 | |
| Free Drop - Side, 45 MER | 6c | 2.60E+03 | 6.44E+03 | 7.18E+03 | 9.78E+03 | |
| Maximum Stress Intensity | | 1.64E+04 | 6.91E+03 | 7.60E+03 | 2.40E+04 | |

NOTES:

1. Refer to Reference [2.2], corresponding Table 2.10.9.67A.
2. $P_m < S_m = 18.7$ ksi
   $P_m + P_b < 1.5 \cdot S_m = 28.1$ ksi
   $P_m + P_b + Q < 3.0 \cdot S_m = 56.1$ ksi
3. See Table 2.32 for combination index identification.
4. For combinations with Salt not listed, the number of load cycles are few and therefore, the fatigue qualifications are met.
5. MER = Meridian, angle of orientation from the contact edge where stresses are given.

**Table 2.58. Summary of Stresses for Load Combinations Normal Conditions of Transport, Stress Point 16b (0.76 in. Wall Toroid)**

| Load Combination | Comb Index | Stress Intensity (psi) | | | | Fatigue Salt |
|---|---|---|---|---|---|---|
| | | Q | $P_m$ | $P_m + P_b$ | $P_m + P_b + Q$ | |
| Hot Environment | 1 | 2.59E+03 | 3.42E+01 | 6.92E+00 | 2.60E+03 | |
| Cold Environment | 2a | 1.32E+03 | 3.42E+01 | 6.92E+00 | 1.33E+03 | |
| Cold Environment | 2b | 1.79E+03 | 3.42E+01 | 6.92E+00 | 1.80E+03 | |
| Minimum Ext. Press. | 3a | 2.59E+03 | 6.80E+01 | 1.61E+01 | 2.61E+03 | |
| Minimum Ext. Press. | 3b | 1.34E+03 | 6.80E+01 | 1.61E+01 | 1.35E+03 | |
| Increased Ext. Press. | 4a | 2.59E+03 | 1.81E+01 | 1.02E+01 | 2.60E+03 | |
| Increased Ext. Press. | 4b | 1.34E+03 | 1.81E+01 | 1.02E+01 | 1.35E+03 | |
| Vibration and Shock | 5a | 2.59E+03 | 7.37E+02 | 1.22E+03 | 3.81E+03 | 1.91E+03 |
| Vibration and Shock | 5b | 1.34E+03 | 7.37E+02 | 1.22E+03 | 2.56E+03 | 1.28E+03 |
| Vibration and Shock | 5c | 1.43E+03 | 7.37E+02 | 1.22E+03 | 2.65E+03 | 1.33E+03 |
| Free Drop - Top | 6a | 2.59E+03 | 6.91E+03 | 1.19E+04 | 1.45E+04 | |
| Free Drop - Top | 6b | 1.34E+03 | 6.91E+03 | 1.19E+04 | 1.32E+04 | |
| Free Drop - Top | 6c | 1.43E+03 | 6.91E+03 | 1.19E+04 | 1.33E+04 | |
| Free Drop - Side, 0 MER | 6a | 2.59E+03 | 2.55E+03 | 3.95E+03 | 6.54E+03 | |
| Free Drop - Side, 0 MER | 6b | 1.34E+03 | 2.55E+03 | 3.95E+03 | 5.29E+03 | |
| Free Drop - Side, 0 MER | 6c | 1.43E+03 | 2.55E+03 | 3.95E+03 | 5.38E+03 | |
| Free Drop - Side, 45 MER | 6a | 2.59E+03 | 6.44E+03 | 5.21E+03 | 7.80E+03 | |
| Free Drop - Side, 45 MER | 6b | 1.34E+03 | 6.44E+03 | 5.21E+03 | 6.55E+03 | |
| Free Drop - Side, 45 MER | 6c | 1.43E+03 | 6.44E+03 | 5.21E+03 | 6.64E+03 | |
| Maximum Stress Intensity | | 2.59E+03 | 6.91E+03 | 1.19E+04 | 1.45E+04 | |

NOTES:

1. Refer to Reference [2.2], corresponding Table 2.10.9.68A.
2. $P_m < S_m = 18.7$ ksi
   $P_m + P_b < 1.5 \cdot S_m = 28.1$ ksi
   $P_m + P_b + Q < 3.0 \cdot S_m = 56.1$ ksi
3. See Table 2.32 for combination index identification.
4. For combinations with Salt not listed, the number of load cycles are few and therefore, the fatigue qualifications are met.
5. MER = Meridian, angle of orientation from the contact edge where stresses are given.
6. Stresses are given at the centroid of the element, therefore, the same stress value is used for $P_m$ and $P_m + P_b$.

**Table 2.59. Summary of Stresses for Load Combinations Normal Conditions of Transport, Stress Point 17 (0.76 in. Wall Toroid)**

| Load Combination | Comb Index | Stress Intensity (psi) | | | | Fatigue Salt |
|---|---|---|---|---|---|---|
| | | Q | $P_m$ | $P_m + P_b$ | $P_m + P_b + Q$ | |
| Hot Environment | 1 | 1.66E+03 | 7.28E+01 | 7.28E+01 | 1.73E+03 | |
| Cold Environment | 2a | 9.28E+02 | 7.28E+01 | 7.28E+01 | 1.00E+03 | |
| Cold Environment | 2b | 4.38E+02 | 7.28E+01 | 7.28E+01 | 5.11E+02 | |
| Minimum Ext. Press. | 3a | 1.66E+03 | 1.44E+02 | 1.44E+02 | 1.80E+03 | |
| Minimum Ext. Press. | 3b | 9.36E+02 | 1.44E+02 | 1.44E+02 | 1.08E+03 | |
| Increased Ext. Press. | 4a | 1.66E+03 | 1.34E+01 | 1.34E+01 | 1.67E+03 | |
| Increased Ext. Press. | 4b | 9.36E+02 | 1.34E+01 | 1.34E+01 | 9.49E+03 | |
| Vibration and Shock | 5a | 1.66E+03 | 8.31E+02 | 8.31E+02 | 2.49E+03 | 1.24E+03 |
| Vibration and Shock | 5b | 9.36E+02 | 8.31E+02 | 8.31E+02 | 1.77E+03 | 8.83E+02 |
| Vibration and Shock | 5c | 3.42E+02 | 8.31E+02 | 8.31E+02 | 1.17E+03 | 5.87E+02 |
| Free Drop - Top | 6a | 1.66E+03 | 5.55E+03 | 5.55E+03 | 7.21E+03 | |
| Free Drop - Top | 6b | 9.36E+02 | 5.55E+03 | 5.55E+03 | 6.49E+03 | |
| Free Drop - Top | 6c | 3.42E+02 | 5.55E+03 | 5.55E+03 | 5.89E+03 | |
| Free Drop - Side, 0 MER | 6a | 1.66E+03 | 2.16E+03 | 2.16E+03 | 3.82E+03 | |
| Free Drop - Side, 0 MER | 6b | 9.36E+02 | 2.16E+03 | 2.16E+03 | 3.10E+03 | |
| Free Drop - Side, 0 MER | 6c | 3.42E+02 | 2.16E+03 | 2.16E+03 | 2.50E+03 | |
| Free Drop - Side, 45 MER | 6a | 1.66E+03 | 2.34E+03 | 2.34E+03 | 4.00E+03 | |
| Free Drop - Side, 45 MER | 6b | 9.36E+02 | 2.34E+03 | 2.34E+03 | 3.28E+03 | |
| Free Drop - Side, 45 MER | 6c | 3.42E+02 | 2.34E+03 | 2.34E+03 | 2.68E+03 | |
| Maximum Stress Intensity | | 1.66E+03 | 5.55E+03 | 5.55E+03 | 7.21E+03 | |

NOTES:

1. Refer to Reference [2.2], corresponding Table 2.10.9.69A.
2. $P_m < S_m = 18.7$ ksi
   $P_m + P_b < 1.5 \cdot S_m = 28.1$ ksi
   $P_m + P_b + Q < 3.0 \cdot S_m = 56.1$ ksi
3. See Table 2.32 for combination index identification.
4. For combinations with Salt not listed, the number of load cycles are few and therefore, the fatigue qualifications are met.
5. MER = Meridian, angle of orientation from the contact edge where stresses are given.

**Table 2.60. Summary of Stresses for Load Combinations Normal Conditions of Transport, Stress Point 18 (0.76 in. Wall Toroid)**

| Load Combination | Comb Index | Stress Intensity (psi) | | | | Fatigue Salt |
|---|---|---|---|---|---|---|
| | | Q | $P_m$ | $P_m + P_b$ | $P_m + P_b + Q$ | |
| Hot Environment | 1 | 1.63E+03 | 1.27E+01 | 1.27E+01 | 1.64E+03 | |
| Cold Environment | 2a | 1.60E+03 | 1.27E+01 | 1.27E+01 | 1.61E+03 | |
| Cold Environment | 2b | 1.27E+02 | 1.27E+01 | 1.27E+01 | 1.40E+02 | |
| Minimum Ext. Press. | 3a | 1.63E+03 | 2.07E+01 | 2.07E+01 | 1.65E+03 | |
| Minimum Ext. Press. | 3b | 1.58E+03 | 2.07E+01 | 2.07E+01 | 1.60E+03 | |
| Increased Ext. Press. | 4a | 1.63E+03 | 1.79E+01 | 1.79E+01 | 1.65E+03 | |
| Increased Ext. Press. | 4b | 1.58E+03 | 1.79E+01 | 1.79E+01 | 1.60E+03 | |
| Vibration and Shock | 5a | 1.63E+03 | 1.29E+03 | 1.29E+03 | 2.92E+03 | 1.46E+03 |
| Vibration and Shock | 5b | 1.58E+03 | 1.29E+03 | 1.29E+03 | 2.87E+03 | 1.43E+03 |
| Vibration and Shock | 5c | 1.57E+02 | 1.29E+03 | 1.29E+03 | 1.45E+03 | 7.24E+02 |
| Free Drop - Top | 6a | 1.63E+03 | 5.55E+03 | 5.55E+03 | 7.18E+03 | |
| Free Drop - Top | 6b | 1.58E+03 | 5.55E+03 | 5.55E+03 | 7.13E+03 | |
| Free Drop - Top | 6c | 1.57E+02 | 5.55E+03 | 5.55E+03 | 5.71E+03 | |
| Free Drop - Side, 0 MER | 6a | 1.63E+03 | 3.48E+03 | 3.48E+03 | 5.11E+03 | |
| Free Drop - Side, 0 MER | 6b | 1.58E+03 | 3.48E+03 | 3.48E+03 | 5.06E+03 | |
| Free Drop - Side, 0 MER | 6c | 1.57E+02 | 3.48E+03 | 3.48E+03 | 3.64E+03 | |
| Free Drop - Side, 45 MER | 6a | 1.63E+03 | 6.79E+02 | 6.79E+02 | 2.31E+03 | |
| Free Drop - Side, 45 MER | 6b | 1.58E+03 | 6.79E+02 | 6.79E+02 | 2.26E+03 | |
| Free Drop - Side, 45 MER | 6c | 1.57E+02 | 6.79E+02 | 6.79E+02 | 8.36E+02 | |
| Maximum Stress Intensity | | 1.63E+03 | 5.55E+03 | 5.55E+03 | 7.18E+03 | |

NOTES:

1. Refer to Reference [2.2], corresponding Table 2.10.9.70A.
2. $P_m < S_m = 18.7$ ksi
   $P_m + P_b < 1.5 \cdot S_m = 28.1$ ksi
   $P_m + P_b + Q < 3.0 \cdot S_m = 56.1$ ksi
3. See Table 2.32 for combination index identification.
4. For combinations with Salt not listed, the number of load cycles are few and therefore, the fatigue qualifications are met.
5. MER = Meridian, angle of orientation from the contact edge where stresses are given.
6. Stresses are given at the centroid of the element, therefore, the same stress value is used for $P_m$ and $P_m + P_b$.

**Table 2.61. Summary of Stresses for Load Combinations Normal Conditions of Transport, Stress Point 19 (0.76 in. Wall Toroid)**

| Load Combination | Comb Index | Stress Intensity (psi) | | | | Fatigue Salt |
|---|---|---|---|---|---|---|
| | | Q | $P_m$ | $P_m + P_b$ | $P_m + P_b + Q$ | |
| Hot Environment | 1 | 2.88E+03 | 1.45E+01 | 1.45E+01 | 2.89E+03 | |
| Cold Environment | 2a | 3.43E+03 | 1.45E+01 | 1.45E+01 | 3.45E+03 | |
| Cold Environment | 2b | 2.18E+01 | 1.45E+01 | 1.45E+01 | 3.63E+01 | |
| Minimum Ext. Press. | 3a | 2.88E+03 | 3.59E+01 | 3.59E+01 | 2.91E+03 | |
| Minimum Ext. Press. | 3b | 3.35E+03 | 3.59E+01 | 3.59E+01 | 3.39E+03 | |
| Increased Ext. Press. | 4a | 2.88E+03 | 3.34E+01 | 3.34E+01 | 2.91E+03 | |
| Increased Ext. Press. | 4b | 3.35E+03 | 3.34E+01 | 3.34E+01 | 3.39E+03 | |
| Vibration and Shock | 5a | 2.88E+03 | 1.72E+03 | 1.72E+03 | 4.60E+03 | 2.30E+03 |
| Vibration and Shock | 5b | 3.35E+03 | 1.72E+03 | 1.72E+03 | 5.07E+03 | 2.54E+03 |
| Vibration and Shock | 5c | 4.29E+01 | 1.72E+03 | 1.72E+03 | 1.76E+03 | 8.81E+02 |
| Free Drop - Top | 6a | 2.88E+03 | 6.93E+03 | 6.93E+03 | 9.81E+03 | |
| Free Drop - Top | 6b | 3.35E+03 | 6.93E+03 | 6.93E+03 | 1.03E+04 | |
| Free Drop - Top | 6c | 4.29E+01 | 6.93E+03 | 6.93E+03 | 6.97E+03 | |
| Free Drop - Side, 0 MER | 6a | 2.88E+03 | 9.21E+02 | 9.21E+02 | 3.80E+03 | |
| Free Drop - Side, 0 MER | 6b | 3.35E+03 | 9.21E+02 | 9.21E+02 | 4.27E+03 | |
| Free Drop - Side, 0 MER | 6c | 4.29E+01 | 9.21E+02 | 9.21E+02 | 9.64E+02 | |
| Free Drop - Side, 45 MER | 6a | 2.88E+03 | 7.10E+02 | 7.10E+02 | 3.59E+03 | |
| Free Drop - Side, 45 MER | 6b | 3.35E+03 | 7.10E+02 | 7.10E+02 | 4.06E+03 | |
| Free Drop - Side, 45 MER | 6c | 4.29E+01 | 7.10E+02 | 7.10E+02 | 7.53E+02 | |
| Maximum Stress Intensity | | 3.43E+03 | 6.93E+03 | 6.93E+03 | 1.03E+04 | |

NOTES:

1. Refer to Reference [2.2], corresponding Table 2.10.9.71A.
2. $P_m < S_m = 18.7$ ksi
   $P_m + P_b < 1.5 \cdot S_m = 28.1$ ksi
   $P_m + P_b + Q < 3.0 \cdot S_m = 56.1$ ksi
3. See Table 2.32 for combination index identification.
4. For combinations with Salt not listed, the number of load cycles are few and therefore, the fatigue qualifications are met.
5. MER = Meridian, angle of orientation from the contact edge where stresses are given.
6. Stresses are given at the centroid of the element, therefore, the same stress value is used for $P_m$ and $P_m + P_b$.

**Table 2.62. Summary of Stresses for Load Combinations Normal Conditions of Transport, Stress Point 20 (0.76 in. Wall Toroid)**

| Load Combination | Comb Index | Stress Intensity (psi) | | | | Fatigue Salt |
|---|---|---|---|---|---|---|
| | | Q | $P_m$ | $P_m + P_b$ | $P_m + P_b + Q$ | |
| Hot Environment | 1 | 3.00E+03 | 8.74E+00 | 8.74E+00 | 3.01E+03 | |
| Cold Environment | 2a | 3.60E+03 | 8.74E+00 | 8.74E+00 | 3.61E+03 | |
| Cold Environment | 2b | 2.14E+01 | 8.74E+00 | 8.74E+00 | 3.02E+01 | |
| Minimum Ext. Press. | 3a | 3.00E+03 | 3.65E+01 | 3.65E+01 | 3.04E+03 | |
| Minimum Ext. Press. | 3b | 3.51E+03 | 3.65E+01 | 3.65E+01 | 3.55E+03 | |
| Increased Ext. Press. | 4a | 3.00E+03 | 4.26E+01 | 4.26E+01 | 3.04E+03 | |
| Increased Ext. Press. | 4b | 3.51E+03 | 4.26E+01 | 4.26E+01 | 3.56E+03 | |
| Vibration and Shock | 5a | 3.00E+03 | 9.83E+02 | 9.83E+02 | 3.98E+03 | 1.99E+03 |
| Vibration and Shock | 5b | 3.51E+03 | 9.83E+02 | 9.83E+02 | 4.50E+03 | 2.25E+03 |
| Vibration and Shock | 5c | 4.34E+01 | 9.83E+02 | 9.83E+02 | 1.03E+03 | 5.13E+02 |
| Free Drop - Top | 6a | 3.00E+03 | 1.01E+04 | 1.01E+04 | 1.31E+04 | |
| Free Drop - Top | 6b | 3.51E+03 | 1.01E+04 | 1.01E+04 | 1.36E+04 | |
| Free Drop - Top | 6c | 4.34E+01 | 1.01E+04 | 1.01E+04 | 1.01E+04 | |
| Free Drop - Side, 0 MER | 6a | 3.00E+03 | 3.76E+02 | 3.76E+02 | 3.38E+03 | |
| Free Drop - Side, 0 MER | 6b | 3.51E+03 | 3.76E+02 | 3.76E+02 | 3.89E+03 | |
| Free Drop - Side, 0 MER | 6c | 4.34E+01 | 3.76E+02 | 3.76E+02 | 4.19E+02 | |
| Free Drop - Side, 45 MER | 6a | 3.00E+03 | 3.49E+02 | 3.49E+02 | 3.35E+03 | |
| Free Drop - Side, 45 MER | 6b | 3.51E+03 | 3.49E+02 | 3.49E+02 | 3.86E+03 | |
| Free Drop - Side, 45 MER | 6c | 4.34E+01 | 3.49E+02 | 3.49E+02 | 3.92E+02 | |
| Maximum Stress Intensity | | 3.60E+03 | 1.01E+04 | 1.01E+04 | 1.36E+04 | |

NOTES:

1. Refer to Reference [2.2], corresponding Table 2.10.9.72A.
2. $P_m < S_m = 18.7$ ksi
   $P_m + P_b < 1.5 \cdot S_m = 28.1$ ksi
   $P_m + P_b + Q < 3.0 \cdot S_m = 56.1$ ksi
3. See Table 2.32 for combination index identification.
4. For combinations with Salt not listed, the number of load cycles are few and therefore, the fatigue qualifications are met.
5. MER = Meridian, angle of orientation from the contact edge where stresses are given.
6. Stresses are given at the centroid of the element, therefore, the same stress value is used for $P_m$ and $P_m + P_b$.

**Table 2.63. Summary of Stresses for Load Combinations Normal Conditions of Transport, Stress Point 21 (0.76 in. Wall Toroid)**

| Load Combination | Comb Index | Stress Intensity (psi) | | | | Fatigue Salt |
|---|---|---|---|---|---|---|
| | | Q | $P_m$ | $P_m + P_b$ | $P_m + P_b + Q$ | |
| Hot Environment | 1 | 1.87E+03 | 1.08E+02 | 1.08E+02 | 1.98E+03 | |
| Cold Environment | 2a | 5.29E+02 | 1.08E+02 | 1.08E+02 | 6.37E+02 | |
| Cold Environment | 2b | 8.67E+02 | 1.08E+02 | 1.08E+02 | 9.75E+02 | |
| Minimum Ext. Press. | 3a | 1.87E+03 | 1.01E+02 | 1.01E+02 | 1.97E+03 | |
| Minimum Ext. Press. | 3b | 4.30E+02 | 1.01E+02 | 1.01E+02 | 5.31E+02 | |
| Increased Ext. Press. | 4a | -1.87E+03 | 1.07E+01 | 1.07E+01 | 1.88E+03 | |
| Increased Ext. Press. | 4b | 4.30E+02 | 1.07E+01 | 1.07E+01 | 4.41E+02 | |
| Vibration and Shock | 5a | 1.87E+03 | 1.48E+02 | 1.48E+02 | 2.02E+03 | 1.01E+03 |
| Vibration and Shock | 5b | 4.30E+02 | 1.48E+02 | 1.48E+02 | 5.78E+02 | 2.89E+02 |
| Vibration and Shock | 5c | 5.42E+02 | 1.48E+02 | 1.48E+02 | 6.90E+02 | 3.45E+02 |
| Free Drop - Top | 6a | 1.87E+03 | 1.00E+04 | 1.00E+04 | 1.19E+04 | |
| Free Drop - Top | 6b | 4.30E+02 | 1.00E+04 | 1.00E+04 | 1.04E+04 | |
| Free Drop - Top | 6c | 5.42E+02 | 1.00E+04 | 1.00E+04 | 1.05E+04 | |
| Free Drop - Side, 0 MER | 6a | 1.87E+03 | 2.13E+02 | 2.13E+02 | 2.08E+03 | |
| Free Drop - Side, 0 MER | 6b | 4.30E+02 | 2.13E+02 | 2.13E+02 | 6.43E+02 | |
| Free Drop - Side, 0 MER | 6c | 5.42E+02 | 2.13E+02 | 2.13E+02 | 7.55E+02 | |
| Free Drop - Side, 45 MER | 6a | 1.87E+03 | 1.87E+02 | 1.87E+02 | 2.06E+03 | |
| Free Drop - Side, 45 MER | 6b | 4.30E+02 | 1.87E+02 | 1.87E+02 | 6.17E+02 | |
| Free Drop - Side, 45 MER | 6c | 5.42E+02 | 1.87E+02 | 1.87E+02 | 7.29E+02 | |
| Maximum Stress Intensity | | 1.87E+03 | 1.00E+04 | 1.00E+04 | 1.19E+04 | |

NOTES:

1. Refer to Reference [2.2], corresponding Table 2.10.9.73A.
2. $P_m < S_m = 18.7$ ksi
   $P_m + P_b < 1.5 \cdot S_m = 28.1$ ksi
   $P_m + P_b + Q < 3.0 \cdot S_m = 56.1$ ksi
3. See Table 2.32 for combination index identification.
4. For combinations with Salt not listed, the number of load cycles are few and therefore, the fatigue qualifications are met.
5. MER = Meridian, angle of orientation from the contact edge where stresses are given.
6. Stresses are given at the centroid of the element, therefore, the same stress value is used for $P_m$ and $P_m + P_b$.

**Table 2.64. Summary of Stresses for Load Combinations Normal Conditions of Transport, Stress Point 22 (0.76 in. Wall Toroid)**

| Load Combination | Comb Index | Stress Intensity (psi) | | | | Fatigue Salt |
|---|---|---|---|---|---|---|
| | | Q | $P_m$ | $P_m + P_b$ | $P_m + P_b + Q$ | |
| Hot Environment | 1 | 5.55E+02 | 1.90E+02 | 1.90E+02 | 7.45E+02 | |
| Cold Environment | 2a | 8.56E+01 | 1.90E+02 | 1.90E+02 | 2.76E+02 | |
| Cold Environment | 2b | 3.51E+02 | 1.90E+02 | 1.90E+02 | 5.41E+02 | |
| Minimum Ext. Press. | 3a | 5.55E+02 | 1.78E+02 | 1.78E+02 | 7.33E+02 | |
| Minimum Ext. Press. | 3b | 1.47E+02 | 1.78E+02 | 1.78E+02 | 3.25E+02 | |
| Increased Ext. Press. | 4a | 5.55E+02 | 2.90E+01 | 2.90E+01 | 5.84E+02 | |
| Increased Ext. Press. | 4b | 1.47E+02 | 2.90E+01 | 2.90E+01 | 1.76E+02 | |
| Vibration and Shock | 5a | 5.55E+02 | 2.64E+02 | 2.64E+02 | 8.19E+02 | 4.10E+02 |
| Vibration and Shock | 5b | 1.47E+02 | 2.64E+02 | 2.64E+02 | 4.11E+02 | 2.05E+02 |
| Vibration and Shock | 5c | 8.03E+02 | 2.64E+02 | 2.64E+02 | 1.07E+03 | 5.33E+02 |
| Free Drop - Top | 6a | 5.55E+02 | 2.75E+03 | 2.75E+03 | 3.31E+03 | |
| Free Drop - Top | 6b | 1.47E+02 | 2.75E+03 | 2.75E+03 | 2.90E+03 | |
| Free Drop - Top | 6c | 8.03E+02 | 2.75E+03 | 2.75E+03 | 3.55E+03 | |
| Free Drop - Side, 0 MER | 6a | 5.55E+02 | 3.79E+02 | 3.79E+02 | 9.34E+02 | |
| Free Drop - Side, 0 MER | 6b | 1.47E+02 | 3.79E+02 | 3.79E+02 | 5.26E+02 | |
| Free Drop - Side, 0 MER | 6c | 8.03E+02 | 3.79E+02 | 3.79E+02 | 1.18E+03 | |
| Free Drop - Side, 45 MER | 6a | 5.55E+02 | 2.84E+02 | 2.84E+02 | 8.39E+02 | |
| Free Drop - Side, 45 MER | 6b | 1.47E+02 | 2.84E+02 | 2.84E+02 | 4.31E+02 | |
| Free Drop - Side, 45 MER | 6c | 8.03E+02 | 2.84E+02 | 2.84E+02 | 1.09E+03 | |
| Maximum Stress Intensity | | 8.03E+02 | 2.75E+03 | 2.75E+03 | 3.55E+03 | |

NOTES:

1. Refer to Reference [2.2], corresponding Table 2.10.9.74A.
2. $P_m < S_m = 18.7$ ksi
   $P_m + P_b < 1.5 \cdot S_m = 28.1$ ksi
   $P_m + P_b + Q < 3.0 \cdot S_m = 56.1$ ksi
3. See Table 2.32 for combination index identification.
4. For combinations with Salt not listed, the number of load cycles are few and therefore, the fatigue qualifications are met.
5. MER = Meridian, angle of orientation from the contact edge where stresses are given.
6. Stresses are given at the centroid of the element, therefore, the same stress value is used for $P_m$ and $P_m + P_b$.

**Table 2.65. Summary of Stresses for Load Combinations Normal Conditions of Transport, Stress Point 23 (0.76 in. Wall Toroid)**

| Load Combination | Comb Index | Stress Intensity (psi) | | | | Fatigue Salt |
|---|---|---|---|---|---|---|
| | | Q | $P_m$ | $P_m + P_b$ | $P_m + P_b + Q$ | |
| Hot Environment | 1 | 1.42E+03 | 8.36E+00 | 8.36E+00 | 1.43E+03 | |
| Cold Environment | 2a | 6.55E+02 | 8.36E+00 | 8.36E+00 | 6.63E+02 | |
| Cold Environment | 2b | 1.81E+03 | 8.36E+00 | 8.36E+00 | 1.81E+03 | |
| Minimum Ext. Press. | 3a | 1.42E+03 | 3.51E+01 | 3.51E+01 | 1.46E+03 | |
| Minimum Ext. Press. | 3b | 5.78E+02 | 3.51E+01 | 3.51E+01 | 6.13E+02 | |
| Increased Ext. Press. | 4a | 1.42E+03 | 6.42E+00 | 6.42E+00 | 1.43E+03 | |
| Increased Ext. Press. | 4b | 5.78E+02 | 6.42E+00 | 6.42E+00 | 5.84E+02 | |
| Vibration and Shock | 5a | 1.42E+03 | 8.94E+01 | 8.94E+01 | 1.51E+03 | 7.57E+02 |
| Vibration and Shock | 5b | 5.78E+02 | 8.94E+01 | 8.94E+01 | 6.67E+02 | 3.34E+02 |
| Vibration and Shock | 5c | 1.73E+03 | 8.94E+01 | 8.94E+01 | 1.82E+03 | 9.11E+02 |
| Free Drop - Top | 6a | 1.42E+03 | 2.29E+03 | 2.29E+03 | 3.71E+03 | |
| Free Drop - Top | 6b | 5.78E+02 | 2.29E+03 | 2.29E+03 | 2.87E+03 | |
| Free Drop - Top | 6c | 1.73E+03 | 2.29E+03 | 2.29E+03 | 4.02E+03 | |
| Free Drop - Side, 0 MER | 6a | 1.42E+03 | 1.09E+02 | 1.09E+02 | 1.53E+03 | |
| Free Drop - Side, 0 MER | 6b | 5.78E+02 | 1.09E+02 | 1.09E+02 | 6.87E+02 | |
| Free Drop - Side, 0 MER | 6c | 1.73E+03 | 1.09E+02 | 1.09E+02 | 1.84E+03 | |
| Free Drop - Side, 45 MER | 6a | 1.42E+03 | 1.23E+02 | 1.23E+02 | 1.55E+03 | |
| Free Drop - Side, 45 MER | 6b | 5.78E+02 | 1.23E+02 | 1.23E+02 | 7.01E+02 | |
| Free Drop - Side, 45 MER | 6c | 1.73E+03 | 1.23E+02 | 1.23E+02 | 1.86E+03 | |
| Maximum Stress Intensity | | 1.81E+03 | 2.29E+03 | 2.29E+03 | 4.02E+03 | |

NOTES:

1. Refer to Reference [2.2], corresponding Table 2.10.9.75A.
2. $P_m < S_m = 18.7$ ksi
   $P_m + P_b < 1.5 \cdot S_m = 28.1$ ksi
   $P_m + P_b + Q < 3.0 \cdot S_m = 56.1$ ksi
3. See Table 2.32 for combination index identification.
4. For combinations with Salt not listed, the number of load cycles are few and therefore, the fatigue qualifications are met.
5. MER = Meridian, angle of orientation from the contact edge where stresses are given.
6. Stresses are given at the centroid of the element, therefore, the same stress value is used for $P_m$ and $P_m + P_b$.

**Table 2.66. Summary of Stresses for Load Combinations Normal Conditions of Transport, Stress Point 24 (0.76 in. Wall Toroid)**

| Load Combination | Comb Index | Stress Intensity (psi) | | | | Fatigue Salt |
|---|---|---|---|---|---|---|
| | | Q | $P_m$ | $P_m + P_b$ | $P_m + P_b + Q$ | |
| Hot Environment | 1 | 4.36E+03 | 8.57E+01 | 8.57E+01 | 4.44E+03 | |
| Cold Environment | 2a | 3.73E+03 | 8.57E+01 | 8.57E+01 | 3.82E+03 | |
| Cold Environment | 2b | 3.27E+03 | 8.57E+01 | 8.57E+01 | 3.36E+03 | |
| Minimum Ext. Press. | 3a | 4.36E+03 | 1.24E+02 | 1.24E+02 | 4.48E+03 | |
| Minimum Ext. Press. | 3b | 3.44E+03 | 1.24E+02 | 1.24E+02 | 3.56E+03 | |
| Increased Ext. Press. | 4a | 4.36E+03 | 5.05E+01 | 5.05E+01 | 4.41E+03 | |
| Increased Ext. Press. | 4b | 3.44E+03 | 5.05E+01 | 5.05E+01 | 3.49E+03 | |
| Vibration and Shock | 5a | 4.36E+03 | 9.92E+02 | 9.92E+02 | 5.35E+03 | 2.67E+03 |
| Vibration and Shock | 5b | 3.44E+03 | 9.92E+02 | 9.92E+02 | 4.43E+03 | 2.21E+03 |
| Vibration and Shock | 5c | 3.30E+03 | 9.92E+02 | 9.92E+02 | 4.29E+03 | 2.15E+03 |
| Free Drop - Top | 6a | 4.36E+03 | 5.27E+03 | 5.27E+03 | 9.63E+03 | |
| Free Drop - Top | 6b | 3.44E+03 | 5.27E+03 | 5.27E+03 | 8.71E+03 | |
| Free Drop - Top | 6c | 3.30E+03 | 5.27E+03 | 5.27E+03 | 8.57E+03 | |
| Free Drop - Side, 0 MER | 6a | 4.36E+03 | 2.06E+03 | 2.06E+03 | 6.42E+03 | |
| Free Drop - Side, 0 MER | 6b | 3.44E+03 | 2.06E+03 | 2.06E+03 | 5.50E+03 | |
| Free Drop - Side, 0 MER | 6c | 3.30E+03 | 2.06E+03 | 2.06E+03 | 5.36E+03 | |
| Free Drop - Side, 45 MER | 6a | 4.36E+03 | 1.76E+03 | 1.76E+03 | 6.12E+03 | |
| Free Drop - Side, 45 MER | 6b | 3.44E+03 | 1.76E+03 | 1.76E+03 | 5.20E+03 | |
| Free Drop - Side, 45 MER | 6c | 3.30E+03 | 1.76E+03 | 1.76E+03 | 5.06E+03 | |
| Maximum Stress Intensity | | 4.36E+03 | 5.27E+03 | 5.27E+03 | 9.63E+03 | |

NOTES:

1. Refer to Reference [2.2], corresponding Table 2.10.9.76A.
2. $P_m < S_m = 18.7$ ksi
   $P_m + P_b < 1.5 \cdot S_m = 28.1$ ksi
   $P_m + P_b + Q < 3.0 \cdot S_m = 56.1$ ksi
3. See Table 2.32 for combination index identification.
4. For combinations with Salt not listed, the number of load cycles are few and therefore, the fatigue qualifications are met.
5. MER = Meridian, angle of orientation from the contact edge where stresses are given.
6. Stresses are given at the centroid of the element, therefore, the same stress value is used for $P_m$ and $P_m + P_b$.

**Table 2.67. Summary of Stresses for Load Combinations Normal Conditions of Transport, Stress Point 25 (0.76 in. Wall Toroid)**

| Load Combination | Comb Index | Stress Intensity (psi) | | | | Fatigue Salt |
|---|---|---|---|---|---|---|
| | | Q | $P_m$ | $P_m + P_b$ | $P_m + P_b + Q$ | |
| Hot Environment | 1 | 5.69E+03 | 5.73E+01 | 5.73E+01 | 5.75E+03 | |
| Cold Environment | 2a | 4.31E+03 | 5.73E+01 | 5.73E+01 | 4.37E+03 | |
| Cold Environment | 2b | 4.79E+03 | 5.73E+01 | 5.73E+01 | 4.84E+03 | |
| Minimum Ext. Press. | 3a | 5.69E+03 | 1.01E+02 | 1.01E+02 | 5.79E+03 | |
| Minimum Ext. Press. | 3b | 4.23E+03 | 1.01E+02 | 1.01E+02 | 4.33E+03 | |
| Increased Ext. Press. | 4a | 5.69E+03 | 6.27E+01 | 6.27E+01 | 5.75E+03 | |
| Increased Ext. Press. | 4b | 4.23E+03 | 6.27E+01 | 6.27E+01 | 4.29E+03 | |
| Vibration and Shock | 5a | 5.69E+03 | 1.33E+03 | 1.33E+03 | 7.02E+03 | 3.51E+03 |
| Vibration and Shock | 5b | 4.23E+03 | 1.33E+03 | 1.33E+03 | 5.56E+03 | 2.78E+03 |
| Vibration and Shock | 5c | 4.30E+03 | 1.33E+03 | 1.33E+03 | 5.63E+03 | 2.81E+03 |
| Free Drop - Top | 6a | 5.69E+03 | 5.82E+03 | 5.82E+03 | 1.15E+04 | |
| Free Drop - Top | 6b | 4.23E+03 | 5.82E+03 | 5.82E+03 | 1.00E+04 | |
| Free Drop - Top | 6c | 4.30E+03 | 5.82E+03 | 5.82E+03 | 1.01E+04 | |
| Free Drop - Side, 0 MER | 6a | 5.69E+03 | 1.23E+04 | 1.23E+04 | 1.80E+04 | |
| Free Drop - Side, 0 MER | 6b | 4.23E+03 | 1.23E+04 | 1.23E+04 | 1.65E+04 | |
| Free Drop - Side, 0 MER | 6c | 4.30E+03 | 1.23E+04 | 1.23E+04 | 1.66E+04 | |
| Free Drop - Side, 45 MER | 6a | 5.69E+03 | 2.43E+03 | 2.43E+03 | 8.12E+03 | |
| Free Drop - Side, 45 MER | 6b | 4.23E+03 | 2.43E+03 | 2.43E+03 | 6.66E+03 | |
| Free Drop - Side, 45 MER | 6c | 4.30E+03 | 2.43E+03 | 2.43E+03 | 6.73E+03 | |
| Maximum Stress Intensity | | 5.69E+03 | 1.23E+04 | 1.23E+04 | 1.80E+04 | |

NOTES:

1. Refer to Reference [2.2], corresponding Table 2.10.9.77A.
2. $P_m < S_m = 18.7$ ksi
   $P_m + P_b < 1.5 \cdot S_m = 28.1$ ksi
   $P_m + P_b + Q < 3.0 \cdot S_m = 56.1$ ksi
3. See Table 2.32 for combination index identification.
4. For combinations with Salt not listed, the number of load cycles are few and therefore, the fatigue qualifications are met.
5. MER = Meridian, angle of orientation from the contact edge where stresses are given.
6. Stresses are given at the centroid of the element, therefore, the same stress value is used for $P_m$ and $P_m + P_b$.

**Table 2.68. Summary of Stresses for Load Combinations Normal Conditions of Transport, Stress Point 26 (0.76 in. Wall Toroid)**

| Load Combination | Comb Index | Stress Intensity (psi) | | | | Fatigue Salt |
|---|---|---|---|---|---|---|
| | | Q | $P_m$ | $P_m + P_b$ | $P_m + P_b + Q$ | |
| Hot Environment | 1 | 2.09E+03 | 3.85E+01 | 3.85E+01 | 2.13E+03 | |
| Cold Environment | 2a | 1.98E+03 | 3.85E+01 | 3.85E+01 | 2.02E+03 | |
| Cold Environment | 2b | 9.12E+02 | 3.85E+01 | 3.85E+01 | 9.51E+02 | |
| Minimum Ext. Press. | 3a | 2.09E+03 | 7.97E+01 | 7.97E+01 | 2.17E+03 | |
| Minimum Ext. Press. | 3b | 1.95E+03 | 7.97E+01 | 7.97E+01 | 2.03E+03 | |
| Increased Ext. Press. | 4a | 2.09E+03 | 3.10E+01 | 3.10E+01 | 2.12E+03 | |
| Increased Ext. Press. | 4b | 1.95E+03 | 3.10E+01 | 3.10E+01 | 1.98E+03 | |
| Vibration and Shock | 5a | 2.09E+03 | 7.19E+02 | 7.19E+02 | 2.81E+03 | 1.41E+03 |
| Vibration and Shock | 5b | 1.95E+03 | 7.19E+02 | 7.19E+02 | 2.67E+03 | 1.33E+03 |
| Vibration and Shock | 5c | 9.22E+02 | 7.19E+02 | 7.19E+02 | 1.64E+03 | 8.21E+02 |
| Free Drop - Top | 6a | 2.09E+03 | 4.16E+03 | 4.16E+03 | 6.25E+03 | |
| Free Drop - Top | 6b | 1.95E+03 | 4.16E+03 | 4.16E+03 | 6.11E+03 | |
| Free Drop - Top | 6c | 9.22E+02 | 4.16E+03 | 4.16E+03 | 5.08E+03 | |
| Free Drop - Side, 0 MER | 6a | 2.09E+03 | 4.61E+03 | 4.61E+03 | 6.70E+03 | |
| Free Drop - Side, 0 MER | 6b | 1.95E+03 | 4.61E+03 | 4.61E+03 | 6.56E+03 | |
| Free Drop - Side, 0 MER | 6c | 9.22E+02 | 4.61E+03 | 4.61E+03 | 5.53E+03 | |
| Free Drop - Side, 45 MER | 6a | 2.09E+03 | 1.83E+03 | 1.83E+03 | 3.92E+03 | |
| Free Drop - Side, 45 MER | 6b | 1.95E+03 | 1.83E+03 | 1.83E+03 | 3.78E+03 | |
| Free Drop - Side, 45 MER | 6c | 9.22E+02 | 1.83E+03 | 1.83E+03 | 2.75E+03 | |
| Maximum Stress Intensity | | 2.09E+03 | 4.61E+03 | 4.61E+03 | 6.70E+03 | |

NOTES:

1. Refer to Reference [2.2], corresponding Table 2.10.9.78A.
2. $P_m < S_m = 18.7$ ksi
   $P_m + P_b < 1.5 \cdot S_m = 28.1$ ksi
   $P_m + P_b + Q < 3.0 \cdot S_m = 56.1$ ksi
3. See Table 2.32 for combination index identification.
4. For combinations with Salt not listed, the number of load cycles are few and therefore, the fatigue qualifications are met.
5. MER = Meridian, angle of orientation from the contact edge where stresses are given.
6. Stresses are given at the centroid of the element, therefore, the same stress value is used for $P_m$ and $P_m + P_b$.

**Table 2.69. Summary of Stresses for Load Combinations Normal Conditions of Transport, Stress Point 27 (0.76 in. Wall Toroid)**

| Load Combination | Comb Index | Stress Intensity (psi) | | | | Fatigue Salt |
|---|---|---|---|---|---|---|
| | | Q | $P_m$ | $P_m + P_b$ | $P_m + P_b + Q$ | |
| Hot Environment | 1 | 2.21E+03 | 6.98E+01 | 6.98E+01 | 2.28E+03 | |
| Cold Environment | 2a | 1.63E+03 | 6.98E+01 | 6.98E+01 | 1.70E+03 | |
| Cold Environment | 2b | 6.68E+02 | 6.98E+01 | 6.98E+01 | 7.38E+02 | |
| Minimum Ext. Press. | 3a | 2.21E+03 | 7.21E+01 | 7.21E+01 | 2.28E+03 | |
| Minimum Ext. Press. | 3b | 1.68E+03 | 7.21E+01 | 7.21E+01 | 1.76E+03 | |
| Increased Ext. Press. | 4a | 2.21E+03 | 2.22E+01 | 2.22E+01 | 2.23E+03 | |
| Increased Ext. Press. | 4b | 1.68E+03 | 2.22E+01 | 2.22E+01 | 1.71E+03 | |
| Vibration and Shock | 5a | 2.21E+03 | 5.84E+04 | 5.84E+04 | 2.79E+03 | 1.40E+03 |
| Vibration and Shock | 5b | 1.68E+03 | 5.84E+04 | 5.84E+04 | 2.27E+03 | 1.13E+03 |
| Vibration and Shock | 5c | 6.49E+02 | 5.84E+04 | 5.84E+04 | 1.23E+03 | 6.16E+02 |
| Free Drop - Top | 6a | 2.21E+03 | 3.69E+03 | 3.69E+03 | 5.90E+03 | |
| Free Drop - Top | 6b | 1.68E+03 | 3.69E+03 | 3.69E+03 | 5.37E+03 | |
| Free Drop - Top | 6c | 6.49E+02 | 3.69E+03 | 3.69E+03 | 4.34E+03 | |
| Free Drop - Side, 0 MER | 6a | 2.21E+03 | 5.05E+03 | 5.05E+03 | 7.26E+03 | |
| Free Drop - Side, 0 MER | 6b | 1.68E+03 | 5.05E+03 | 5.05E+03 | 6.73E+03 | |
| Free Drop - Side, 0 MER | 6c | 6.49E+02 | 5.05E+03 | 5.05E+03 | 5.70E+03 | |
| Free Drop - Side, 45 MER | 6a | 2.21E+03 | 1.96E+03 | 1.96E+03 | 4.17E+03 | |
| Free Drop - Side, 45 MER | 6b | 1.68E+03 | 1.96E+03 | 1.96E+03 | 3.64E+03 | |
| Free Drop - Side, 45 MER | 6c | 6.49E+02 | 1.96E+03 | 1.96E+03 | 2.61E+03 | |
| Maximum Stress Intensity | | 2.21E+03 | 5.05E+03 | 5.05E+03 | 7.26E+03 | |

NOTES:

1. Refer to Reference [2.2], corresponding Table 2.10.9.79A.
2. $P_m < S_m = 18.7$ ksi
   $P_m + P_b < 1.5 \cdot S_m = 28.1$ ksi
   $P_m + P_b + Q < 3.0 \cdot S_m = 56.1$ ksi
3. See Table 2.32 for combination index identification.
4. For combinations with Salt not listed, the number of load cycles are few and therefore, the fatigue qualifications are met.
5. MER = Meridian, angle of orientation from the contact edge where stresses are given.
6. Stresses are given at the centroid of the element, therefore, the same stress value is used for $P_m$ and $P_m + P_b$.

**Table 2.70. Summary of Stresses for Load Combinations Accident Conditions of Transport, Stress Point 1 (0.76 in. Wall Toroid)**

| Load Combination | Combination Index | Stress Intensity (psi) | |
|---|---|---|---|
| | | $P_m$ | $P_m + P_b$ |
| Free Drop 30 Foot - Top | 7a | 5.36E+02 | 5.36E+02 |
| Free Drop 30 Foot - Top | 7b | 5.36E+02 | 5.36E+02 |
| Free Drop 30 Foot - Top | 7c | 5.36E+02 | 5.36E+02 |
| Free Drop 30 Foot - Bottom | 7a | 1.60E+03 | 1.60E+03 |
| Free Drop 30 Foot - Bottom | 7b | 1.60E+03 | 1.60E+03 |
| Free Drop 30 Foot - Bottom | 7c | 1.60E+03 | 1.60E+03 |
| Free Drop 30 Foot - Side | 7a | 4.42E+02 | 4.42E+02 |
| Free Drop 30 Foot - Side | 7b | 4.42E+02 | 4.42E+02 |
| Free Drop 30 Foot - Side | 7c | 4.42E+02 | 4.42E+02 |
| Free Drop 30 Foot - CG | 7a | 2.76E+01 | 2.76E+01 |
| Free Drop 30 Foot - CG | 7b | 2.76E+01 | 2.76E+01 |
| Free Drop 30 Foot - CG | 7c | 2.76E+01 | 2.76E+01 |
| Puncture | 8a | 4.42E+02 | 4.42E+02 |
| Puncture | 8b | 4.42E+02 | 4.42E+02 |
| Puncture | 8c | 4.42E+02 | 4.42E+02 |
| Thermal Fire - t = 0.5 Hr | 9 | 1.30E+01 | 1.30E+01 |
| Thermal Fire - t = 1.0 Hr | 9 | 1.30E+01 | 1.30E+01 |
| Thermal Fire - t = 1.5 Hr | 9 | 1.30E+01 | 1.30E+01 |
| Thermal Fire - t = 2.0 Hr | 9 | 1.30E+01 | 1.30E+01 |
| Thermal Fire - t = 2.5 Hr | 9 | 1.30E+01 | 1.30E+01 |
| Thermal Fire - t = 3.0 Hr | 9 | 1.30E+01 | 1.30E+01 |
| Maximum Stress Intensity | | 1.60E+03 | 1.60E+03 |

NOTES:

1. Refer to Reference [2.2], corresponding Table 2.10.9.80A.
2. $P_m < 2.4 \cdot S_m$ or $0.7 \cdot S_u = 44.8$ ksi
   $P_m + P_b < 3.6 \cdot S_m$ or $1.0 \cdot S_u = 64.4$ ksi
3. See Table 2.32 for combination index identification.
4. Stresses are given at the centroid of the element, therefore, the same stress value is used for $P_m$ and $P_m + P_b$.

**Table 2.71. Summary of Stresses for Load Combinations Accident Conditions of Transport, Stress Point 2 (0.76 in. Wall Toroid)**

| Load Combination | Combination Index | Stress Intensity (psi) | |
|---|---|---|---|
| | | $P_m$ | $P_m + P_b$ |
| Free Drop 30 Foot - Top | 7a | 4.49E+02 | 4.49E+02 |
| Free Drop 30 Foot - Top | 7b | 4.49E+02 | 4.49E+02 |
| Free Drop 30 Foot - Top | 7c | 4.49E+02 | 4.49E+02 |
| Free Drop 30 Foot - Bottom | 7a | 1.54E+03 | 1.54E+03 |
| Free Drop 30 Foot - Bottom | 7b | 1.54E+03 | 1.54E+03 |
| Free Drop 30 Foot - Bottom | 7c | 1.54E+03 | 1.54E+03 |
| Free Drop 30 Foot - Side | 7a | 6.42E+02 | 6.42E+02 |
| Free Drop 30 Foot - Side | 7b | 6.42E+02 | 6.42E+02 |
| Free Drop 30 Foot - Side | 7c | 6.42E+02 | 6.42E+02 |
| Free Drop 30 Foot - CG | 7a | 5.88E+01 | 5.88E+01 |
| Free Drop 30 Foot - CG | 7b | 5.88E+01 | 5.88E+01 |
| Free Drop 30 Foot - CG | 7c | 5.88E+01 | 5.88E+01 |
| Puncture | 8a | 6.42E+02 | 6.42E+02 |
| Puncture | 8b | 6.42E+02 | 6.42E+02 |
| Puncture | 8c | 6.42E+02 | 6.42E+02 |
| Thermal Fire - t = 0.5 Hr | 9 | 1.37E+01 | 1.37E+01 |
| Thermal Fire - t = 1.0 Hr | 9 | 1.37E+01 | 1.37E+01 |
| Thermal Fire - t = 1.5 Hr | 9 | 1.37E+01 | 1.37E+01 |
| Thermal Fire - t = 2.0 Hr | 9 | 1.37E+01 | 1.37E+01 |
| Thermal Fire - t = 2.5 Hr | 9 | 1.37E+01 | 1.37E+01 |
| Thermal Fire - t = 3.0 Hr | 9 | 1.37E+01 | 1.37E+01 |
| Maximum Stress Intensity | | 1.54E+03 | 1.54E+03 |

NOTES:

1. Refer to Reference [2.2], corresponding Table 2.10.9.81A.
2. $P_m < 2.4 \cdot S_m$ or $0.7 \cdot S_u = 44.8$ ksi
   $P_m + P_b < 3.6 \cdot S_m$ or $1.0 \cdot S_u = 64.4$ ksi
3. See Table 2.32 for combination index identification.
4. Stresses are given at the centroid of the element, therefore, the same stress value is used for $P_m$ and $P_m + P_b$.

**Table 2.72. Summary of Stresses for Load Combinations Accident Conditions of Transport, Stress Point 3 (0.76 in. Wall Toroid)**

| Load Combination | Combination Index | Stress Intensity (psi) | |
|---|---|---|---|
| | | $P_m$ | $P_m + P_b$ |
| Free Drop 30 Foot - Top | 7a | 3.75E+02 | 3.75E+02 |
| Free Drop 30 Foot - Top | 7b | 3.75E+02 | 3.75E+02 |
| Free Drop 30 Foot - Top | 7c | 3.75E+02 | 3.75E+02 |
| Free Drop 30 Foot - Bottom | 7a | 1.98E+03 | 1.98E+03 |
| Free Drop 30 Foot - Bottom | 7b | 1.98E+03 | 1.98E+03 |
| Free Drop 30 Foot - Bottom | 7c | 1.98E+03 | 1.98E+03 |
| Free Drop 30 Foot - Side | 7a | 1.72E+04 | 1.72E+04 |
| Free Drop 30 Foot - Side | 7b | 1.72E+04 | 1.72E+04 |
| Free Drop 30 Foot - Side | 7c | 1.72E+04 | 1.72E+04 |
| Free Drop 30 Foot - CG | 7a | 1.40E+03 | 1.40E+03 |
| Free Drop 30 Foot - CG | 7b | 1.40E+03 | 1.40E+03 |
| Free Drop 30 Foot - CG | 7c | 1.40E+03 | 1.40E+03 |
| Puncture | 8a | 1.72E+04 | 1.72E+04 |
| Puncture | 8b | 1.72E+04 | 1.72E+04 |
| Puncture | 8c | 1.72E+04 | 1.72E+04 |
| Thermal Fire - t = 0.5 Hr | 9 | 1.51E+01 | 1.51E+01 |
| Thermal Fire - t = 1.0 Hr | 9 | 1.51E+01 | 1.51E+01 |
| Thermal Fire - t = 1.5 Hr | 9 | 1.51E+01 | 1.51E+01 |
| Thermal Fire - t = 2.0 Hr | 9 | 1.51E+01 | 1.51E+01 |
| Thermal Fire - t = 2.5 Hr | 9 | 1.51E+01 | 1.51E+01 |
| Thermal Fire - t = 3.0 Hr | 9 | 1.51E+01 | 1.51E+01 |
| Maximum Stress Intensity | | 1.72E+04 | 1.72E+04 |

NOTES:

1. Refer to Reference [2.2], corresponding Table 2.10.9.82A.
2. $P_m < 2.4 \cdot S_m$ or $0.7 \cdot S_u = 44.8$ ksi
   $P_m + P_b < 3.6 \cdot S_m$ or $1.0 \cdot S_u = 64.4$ ksi
3. See Table 2.32 for combination index identification.
4. Stresses are given at the centroid of the element, therefore, the same stress value is used for $P_m$ and $P_m + P_b$.

**Table 2.73. Summary of Stresses for Load Combinations Accident Conditions of Transport, Stress Point 4 (0.76 in. Wall Toroid)**

| Load Combination | Combination Index | Stress Intensity (psi) | |
|---|---|---|---|
| | | $P_m$ | $P_m + P_b$ |
| Free Drop 30 Foot - Top | 7a | 2.98E+02 | 2.98E+02 |
| Free Drop 30 Foot - Top | 7b | 2.98E+02 | 2.98E+02 |
| Free Drop 30 Foot - Top | 7c | 2.98E+02 | 2.98E+02 |
| Free Drop 30 Foot - Bottom | 7a | 1.76E+03 | 1.76E+03 |
| Free Drop 30 Foot - Bottom | 7b | 1.76E+03 | 1.76E+03 |
| Free Drop 30 Foot - Bottom | 7c | 1.76E+03 | 1.76E+03 |
| Free Drop 30 Foot - Side | 7a | 5.34E+03 | 5.34E+03 |
| Free Drop 30 Foot - Side | 7b | 5.34E+03 | 5.34E+03 |
| Free Drop 30 Foot - Side | 7c | 5.34E+03 | 5.34E+03 |
| Free Drop 30 Foot - CG | 7a | 1.62E+03 | 1.62E+03 |
| Free Drop 30 Foot - CG | 7b | 1.62E+03 | 1.62E+03 |
| Free Drop 30 Foot - CG | 7c | 1.62E+03 | 1.62E+03 |
| Puncture | 8a | 5.34E+03 | 5.34E+03 |
| Puncture | 8b | 5.34E+03 | 5.34E+03 |
| Puncture | 8c | 5.34E+03 | 5.34E+03 |
| Thermal Fire - t = 0.5 Hr | 9 | 1.76E+01 | 1.76E+01 |
| Thermal Fire - t = 1.0 Hr | 9 | 1.76E+01 | 1.76E+01 |
| Thermal Fire - t = 1.5 Hr | 9 | 1.76E+01 | 1.76E+01 |
| Thermal Fire - t = 2.0 Hr | 9 | 1.76E+01 | 1.76E+01 |
| Thermal Fire - t = 2.5 Hr | 9 | 1.76E+01 | 1.76E+01 |
| Thermal Fire - t = 3.0 Hr | 9 | 1.76E+01 | 1.76E+01 |
| Maximum Stress Intensity | | 5.34E+01 | 5.34E+01 |

NOTES:

1. Refer to Reference [2.2], corresponding Table 2.10.9.83A.
2. $P_m < 2.4 \cdot S_m$ or $0.7 \cdot S_u = 44.8$ ksi
   $P_m + P_b < 3.6 \cdot S_m$ or $1.0 \cdot S_u = 64.4$ ksi
3. See Table 2.32 for combination index identification.
4. Stresses are given at the centroid of the element, therefore, the same stress value is used for $P_m$ and $P_m + P_b$.

**Table 2.74. Summary of Stresses for Load Combinations Accident Conditions of Transport, Stress Point 5 (0.76 in. Wall Toroid)**

| Load Combination | Combination Index | Stress Intensity (psi) | |
|---|---|---|---|
| | | $P_m$ | $P_m + P_b$ |
| Free Drop 30 Foot - Top | 7a | 1.30E+02 | 1.30E+02 |
| Free Drop 30 Foot - Top | 7b | 1.30E+02 | 1.30E+02 |
| Free Drop 30 Foot - Top | 7c | 1.30E+02 | 1.30E+02 |
| Free Drop 30 Foot - Bottom | 7a | 3.24E+03 | 3.24E+03 |
| Free Drop 30 Foot - Bottom | 7b | 3.24E+03 | 3.24E+03 |
| Free Drop 30 Foot - Bottom | 7c | 3.24E+03 | 3.24E+03 |
| Free Drop 30 Foot - Side | 7a | 2.96E+03 | 2.96E+03 |
| Free Drop 30 Foot - Side | 7b | 2.96E+03 | 2.96E+03 |
| Free Drop 30 Foot - Side | 7c | 2.96E+03 | 2.96E+03 |
| Free Drop 30 Foot - CG | 7a | 5.75E+02 | 5.75E+02 |
| Free Drop 30 Foot - CG | 7b | 5.75E+02 | 5.75E+02 |
| Free Drop 30 Foot - CG | 7c | 5.75E+02 | 5.75E+02 |
| Puncture | 8a | 2.96E+03 | 2.96E+03 |
| Puncture | 8b | 2.96E+03 | 2.96E+03 |
| Puncture | 8c | 2.96E+03 | 2.96E+03 |
| Thermal Fire - t = 0.5 Hr | 9 | 3.07E+00 | 3.07E+00 |
| Thermal Fire - t = 1.0 Hr | 9 | 3.07E+00 | 3.07E+00 |
| Thermal Fire - t = 1.5 Hr | 9 | 3.07E+00 | 3.07E+00 |
| Thermal Fire - t = 2.0 Hr | 9 | 3.07E+00 | 3.07E+00 |
| Thermal Fire - t = 2.5 Hr | 9 | 3.07E+00 | 3.07E+00 |
| Thermal Fire - t = 3.0 Hr | 9 | 3.07E+00 | 3.07E+00 |
| Maximum Stress Intensity | | 3.24E+03 | 3.24E+03 |

NOTES:

1. Refer to Reference [2.2], corresponding Table 2.10.9.84A.
2. $P_m < 2.4 \cdot S_m$ or $0.7 \cdot S_u = 44.8$ ksi
   $P_m + P_b < 3.6 \cdot S_m$ or $1.0 \cdot S_u = 64.4$ ksi
3. See Table 2.32 for combination index identification.
4. Stresses are given at the centroid of the element, therefore, the same stress value is used for $P_m$ and $P_m + P_b$.

**Table 2.75. Summary of Stresses for Load Combinations Accident Conditions of Transport, Stress Point 6 (0.76 in. Wall Toroid)**

| Load Combination | Combination Index | Stress Intensity (psi) | |
|---|---|---|---|
| | | $P_m$ | $P_m + P_b$ |
| Free Drop 30 Foot - Top | 7a | 1.15E+02 | 1.15E+02 |
| Free Drop 30 Foot - Top | 7b | 1.15E+02 | 1.15E+02 |
| Free Drop 30 Foot - Top | 7c | 1.15E+02 | 1.15E+02 |
| Free Drop 30 Foot - Bottom | 7a | 3.98E+03 | 3.98E+03 |
| Free Drop 30 Foot - Bottom | 7b | 3.98E+03 | 3.98E+03 |
| Free Drop 30 Foot - Bottom | 7c | 3.98E+03 | 3.98E+03 |
| Free Drop 30 Foot - Side | 7a | 2.84E+03 | 2.84E+03 |
| Free Drop 30 Foot - Side | 7b | 2.84E+03 | 2.84E+03 |
| Free Drop 30 Foot - Side | 7c | 2.84E+03 | 2.84E+03 |
| Free Drop 30 Foot - CG | 7a | 6.31E+02 | 6.31E+02 |
| Free Drop 30 Foot - CG | 7b | 6.31E+02 | 6.31E+02 |
| Free Drop 30 Foot - CG | 7c | 6.31E+02 | 6.31E+02 |
| Puncture | 8a | 2.84E+03 | 2.84E+03 |
| Puncture | 8b | 2.84E+03 | 2.84E+03 |
| Puncture | 8c | 2.84E+03 | 2.84E+03 |
| Thermal Fire - t = 0.5 Hr | 9 | 7.86E+00 | 7.86E+00 |
| Thermal Fire - t = 1.0 Hr | 9 | 7.86E+00 | 7.86E+00 |
| Thermal Fire - t = 1.5 Hr | 9 | 7.86E+00 | 7.86E+00 |
| Thermal Fire - t = 2.0 Hr | 9 | 7.86E+00 | 7.86E+00 |
| Thermal Fire - t = 2.5 Hr | 9 | 7.86E+00 | 7.86E+00 |
| Thermal Fire - t = 3.0 Hr | 9 | 7.86E+00 | 7.86E+00 |
| Maximum Stress Intensity | | 3.98E+03 | 3.98E+03 |

NOTES:

1. Refer to Reference [2.2], corresponding Table 2.10.9.85A.
2. $P_m < 2.4 \cdot S_m$ or $0.7 \cdot S_u = 44.8$ ksi
   $P_m + P_b < 3.6 \cdot S_m$ or $1.0 \cdot S_u = 64.4$ ksi
3. See Table 2.32 for combination index identification.
4. Stresses are given at the centroid of the element, therefore, the same stress value is used for $P_m$ and $P_m + P_b$.

**Table 2.76. Summary of Stresses for Load Combinations Accident Conditions of Transport, Stress Point 7a (0.76 in. Wall Toroid)**

| LOAD COMBINATION | COMBINATION INDEX | STRESS INTENSITY (PSI) | |
|---|---|---|---|
| | | Pm | Pm+Pb |
| FREE DROP 30 FOOT - TOP | 7a | 3.44E+03 | 3.16E+03 |
| FREE DROP 30 FOOT - TOP | 7b | 3.44E+03 | 3.16E+03 |
| FREE DROP 30 FOOT - TOP | 7c | 3.44E+03 | 3.16E+03 |
| FREE DROP 30 FOOT - BOTTOM | 7a | 1.14E+04 | 1.74E+04 |
| FREE DROP 30 FOOT - BOTTOM | 7b | 1.14E+04 | 1.74E+04 |
| FREE DROP 30 FOOT - BOTTOM | 7c | 1.14E+04 | 1.74E+04 |
| FREE DROP 30 FOOT - SIDE | 7a | 9.67E+03 | 1.75E+03 |
| FREE DROP 30 FOOT - SIDE | 7b | 9.67E+03 | 1.75E+03 |
| FREE DROP 30 FOOT - SIDE | 7c | 9.67E+03 | 1.75E+03 |
| FREE DROP 30 FOOT - CG | 7a | 1.01E+03 | 2.35E+03 |
| FREE DROP 30 FOOT - CG | 7b | 1.01E+03 | 2.35E+03 |
| FREE DROP 30 FOOT - CG | 7c | 1.01E+03 | 2.35E+03 |
| PUNCTURE | 8a | 9.67E+03 | 1.75E+03 |
| PUNCTURE | 8b | 9.67E+03 | 1.75E+03 |
| PUNCTURE | 8c | 9.67E+03 | 1.75E+03 |
| THERMAL FIRE - T=0.5 HR | 9 | 1.00E+02 | 6.22E+01 |
| THERMAL FIRE - T=1.0 HR | 9 | 1.00E+02 | 6.22E+01 |
| THERMAL FIRE - T=1.5 HR | 9 | 6.22E+01 | 1.00E+02 |
| THERMAL FIRE - T=2.0 HR | 9 | 6.22E+01 | 1.00E+02 |
| THERMAL FIRE - T=2.5 HR | 9 | 6.22E+01 | 1.00E+02 |
| THERMAL FIRE - T=3.0 HR | 9 | 6.22E+01 | 1.00E+02 |
| MAXIMUM STRESS INTENSITY | | 1.14E+04 | 1.74E+04 |

NOTES:

1. Refer to Reference [2.2], corresponding Table 2.10.9.86A.
2. Pm < 2.4·Sm or 0.7·Su = 44.8 ksi
   Pm+Pb < 3.6·Sm or 1.0 Su = 64.4 ksi
3. See Table 2.32 for combination index identification.

**Table 2.77. Summary of Stresses for Load Combinations Accident Conditions of Transport, Stress Point 7b (0.76 in. Wall Toroid)**

| Load Combination | Combination Index | Stress Intensity (psi) | |
|---|---|---|---|
| | | $P_m$ | $P_m + P_b$ |
| Free Drop 30 Foot - Top | 7a | 3.44E+03 | 3.73E+03 |
| Free Drop 30 Foot - Top | 7b | 3.44E+03 | 3.73E+03 |
| Free Drop 30 Foot - Top | 7c | 3.44E+03 | 3.73E+03 |
| Free Drop 30 Foot - Bottom | 7a | 1.14E+04 | 8.13E+03 |
| Free Drop 30 Foot - Bottom | 7b | 1.14E+04 | 8.13E+03 |
| Free Drop 30 Foot - Bottom | 7c | 1.14E+04 | 8.13E+03 |
| Free Drop 30 Foot - Side | 7a | 9.67E+03 | 2.39E+04 |
| Free Drop 30 Foot - Side | 7b | 9.67E+03 | 2.39E+04 |
| Free Drop 30 Foot - Side | 7c | 9.67E+03 | 2.39E+04 |
| Free Drop 30 Foot - CG | 7a | 1.01E+03 | 2.73E+03 |
| Free Drop 30 Foot - CG | 7b | 1.01E+03 | 2.73E+03 |
| Free Drop 30 Foot - CG | 7c | 1.01E+03 | 2.73E+03 |
| Puncture | 8a | 9.67E+03 | 2.39E+04 |
| Puncture | 8b | 9.67E+03 | 2.39E+04 |
| Puncture | 8c | 9.67E+03 | 2.39E+04 |
| Thermal Fire - t = 0.5 Hr | 9 | 3.93E+01 | 6.22E+01 |
| Thermal Fire - t = 1.0 Hr | 9 | 3.93E+01 | 6.22E+01 |
| Thermal Fire - t = 1.5 Hr | 9 | 6.22E+01 | 3.93E+01 |
| Thermal Fire - t = 2.0 Hr | 9 | 6.22E+01 | 3.93E+01 |
| Thermal Fire - t = 2.5 Hr | 9 | 6.22E+01 | 3.93E+01 |
| Thermal Fire - t = 3.0 Hr | 9 | 6.22E+01 | 3.93E+01 |
| Maximum Stress Intensity | | 1.14E+04 | 2.39E+04 |

NOTES:

1. Refer to Reference [2.2], corresponding Table 2.10.9.87A.
2. $P_m < 2.4 \cdot S_m$ or $0.7 \cdot S_u = 44.8$ ksi
   $P_m + P_b < 3.6 \cdot S_m$ or $1.0 \cdot S_u = 64.4$ ksi
3. See Table 2.32 for combination index identification.

**Table 2.78. Summary of Stresses for Load Combinations Accident Conditions of Transport, Stress Point 8a (0.76 in. Wall Toroid)**

| Load Combination | Combination Index | Stress Intensity (psi) | |
|---|---|---|---|
| | | $P_m$ | $P_m + P_b$ |
| Free Drop 30 Foot - Top | 7a | 3.58E+02 | 4.78E+02 |
| Free Drop 30 Foot - Top | 7b | 3.58E+02 | 4.78E+02 |
| Free Drop 30 Foot - Top | 7c | 3.58E+02 | 4.78E+02 |
| Free Drop 30 Foot - Bottom | 7a | 1.28E+04 | 2.07E+04 |
| Free Drop 30 Foot - Bottom | 7b | 1.28E+04 | 2.07E+04 |
| Free Drop 30 Foot - Bottom | 7c | 1.28E+04 | 2.07E+04 |
| Free Drop 30 Foot - Side | 7a | 6.03E+03 | 1.61E+04 |
| Free Drop 30 Foot - Side | 7b | 6.03E+03 | 1.61E+04 |
| Free Drop 30 Foot - Side | 7c | 6.03E+03 | 1.61E+04 |
| Free Drop 30 Foot - CG | 7a | 2.94E+03 | 5.88E+03 |
| Free Drop 30 Foot - CG | 7b | 2.94E+03 | 5.88E+03 |
| Free Drop 30 Foot - CG | 7c | 2.94E+03 | 5.88E+03 |
| Puncture | 8a | 6.03E+03 | 1.61E+04 |
| Puncture | 8b | 6.03E+03 | 1.61E+04 |
| Puncture | 8c | 6.03E+03 | 1.61E+04 |
| Thermal Fire - t = 0.5 Hr | 9 | 4.32E+01 | 3.01E+01 |
| Thermal Fire - t = 1.0 Hr | 9 | 4.32E+01 | 3.01E+01 |
| Thermal Fire - t = 1.5 Hr | 9 | 3.01E+01 | 4.32E+01 |
| Thermal Fire - t = 2.0 Hr | 9 | 3.01E+01 | 4.32E+01 |
| Thermal Fire - t = 2.5 Hr | 9 | 3.01E+01 | 4.32E+01 |
| Thermal Fire - t = 3.0 Hr | 9 | 3.01E+01 | 4.32E+01 |
| Maximum Stress Intensity | | 1.28E+04 | 2.07E+04 |

NOTES:

1. Refer to Reference [2.2], corresponding Table 2.10.9.88A.
2. $P_m < 2.4 \cdot S_m$ or $0.7 \cdot S_u = 44.8$ ksi
   $P_m + P_b < 3.6 \cdot S_m$ or $1.0 \cdot S_u = 64.4$ ksi
3. See Table 2.32 for combination index identification.

**Table 2.79. Summary of Stresses for Load Combinations Accident Conditions of Transport, Stress Point 8b (0.76 in. Wall Toroid)**

| Load Combination | Combination Index | Stress Intensity (psi) | |
|---|---|---|---|
| | | $P_m$ | $P_m + P_b$ |
| Free Drop 30 Foot - Top | 7a | 3.58E+02 | 2.38E+02 |
| Free Drop 30 Foot - Top | 7b | 3.58E+02 | 2.38E+02 |
| Free Drop 30 Foot - Top | 7c | 3.58E+02 | 2.38E+02 |
| Free Drop 30 Foot - Bottom | 7a | 1.28E+04 | 1.20E+04 |
| Free Drop 30 Foot - Bottom | 7b | 1.28E+04 | 1.20E+04 |
| Free Drop 30 Foot - Bottom | 7c | 1.28E+04 | 1.20E+04 |
| Free Drop 30 Foot - Side | 7a | 6.03E+03 | 5.62E+03 |
| Free Drop 30 Foot - Side | 7b | 6.03E+03 | 5.62E+03 |
| Free Drop 30 Foot - Side | 7c | 6.03E+03 | 5.62E+03 |
| Free Drop 30 Foot - CG | 7a | 2.94E+03 | 6.85E+02 |
| Free Drop 30 Foot - CG | 7b | 2.94E+03 | 6.85E+02 |
| Free Drop 30 Foot - CG | 7c | 2.94E+03 | 6.85E+02 |
| Puncture | 8a | 6.03E+03 | 5.62E+03 |
| Puncture | 8b | 6.03E+03 | 5.62E+03 |
| Puncture | 8c | 6.03E+03 | 5.62E+03 |
| Thermal Fire - t = 0.5 Hr | 9 | 1.69E+01 | 3.01E+01 |
| Thermal Fire - t = 1.0 Hr | 9 | 1.69E+01 | 3.01E+01 |
| Thermal Fire - t = 1.5 Hr | 9 | 3.01E+01 | 1.69E+01 |
| Thermal Fire - t = 2.0 Hr | 9 | 3.01E+01 | 1.69E+01 |
| Thermal Fire - t = 2.5 Hr | 9 | 3.01E+01 | 1.69E+01 |
| Thermal Fire - t = 3.0 Hr | 9 | 3.01E+01 | 1.69E+01 |
| Maximum Stress Intensity | | 1.28E+04 | 1.20E+04 |

NOTES:

1. Refer to Reference [2.2], corresponding Table 2.10.9.89A.
2. $P_m < 2.4 \cdot S_m$ or $0.7 \cdot S_u = 44.8$ ksi
   $P_m + P_b < 3.6 \cdot S_m$ or $1.0 \cdot S_u = 64.4$ ksi
3. See Table 2.32 for combination index identification.

**Table 2.80. Summary of Stresses for Load Combinations Accident Conditions of Transport, Stress Point 9a (0.76 in. Wall Toroid)**

| Load Combination | Combination Index | Stress Intensity (psi) | |
|---|---|---|---|
| | | $P_m$ | $P_m + P_b$ |
| Free Drop 30 Foot - Top | 7a | 4.04E+03 | 4.09E+03 |
| Free Drop 30 Foot - Top | 7b | 4.04E+03 | 4.09E+03 |
| Free Drop 30 Foot - Top | 7c | 4.04E+03 | 4.09E+03 |
| Free Drop 30 Foot - Bottom | 7a | 1.61E+04 | 1.66E+04 |
| Free Drop 30 Foot - Bottom | 7b | 1.61E+04 | 1.66E+04 |
| Free Drop 30 Foot - Bottom | 7c | 1.61E+04 | 1.66E+04 |
| Free Drop 30 Foot - Side | 7a | 4.46E+03 | 6.22E+02 |
| Free Drop 30 Foot - Side | 7b | 4.46E+03 | 6.22E+02 |
| Free Drop 30 Foot - Side | 7c | 4.46E+03 | 6.22E+02 |
| Free Drop 30 Foot - CG | 7a | 2.50E+03 | 1.78E+03 |
| Free Drop 30 Foot - CG | 7b | 2.50E+03 | 1.78E+03 |
| Free Drop 30 Foot - CG | 7c | 2.50E+03 | 1.78E+03 |
| Puncture | 8a | 4.46E+03 | 6.22E+02 |
| Puncture | 8b | 4.46E+03 | 6.22E+02 |
| Puncture | 8c | 4.46E+03 | 6.22E+02 |
| Thermal Fire - t = 0.5 Hr | 9 | 1.44E+02 | 1.33E+02 |
| Thermal Fire - t = 1.0 Hr | 9 | 1.44E+02 | 1.33E+02 |
| Thermal Fire - t = 1.5 Hr | 9 | 1.33E+02 | 1.44E+02 |
| Thermal Fire - t = 2.0 Hr | 9 | 1.33E+02 | 1.44E+02 |
| Thermal Fire - t = 2.5 Hr | 9 | 1.33E+02 | 1.44E+02 |
| Thermal Fire - t = 3.0 Hr | 9 | 1.33E+02 | 1.44E+02 |
| Maximum Stress Intensity | | 1.61E+04 | 1.66E+04 |

NOTES:

1. Refer to Reference [2.2], corresponding Table 2.10.9.90A.
2. $P_m < 2.4 \cdot S_m$ or $0.7 \cdot S_u = 44.8$ ksi
   $P_m + P_b < 3.6 \cdot S_m$ or $1.0 \cdot S_u = 64.4$ ksi
3. See Table 2.32 for combination index identification.

**Table 2.81. Summary of Stresses for Load Combinations Accident Conditions of Transport, Stress Point 9b (0.76 in. Wall Toroid)**

| Load Combination | Combination Index | Stress Intensity (psi) | |
|---|---|---|---|
| | | $P_m$ | $P_m + P_b$ |
| Free Drop 30 Foot - Top | 7a | 4.04E+03 | 3.99E+03 |
| Free Drop 30 Foot - Top | 7b | 4.04E+03 | 3.99E+03 |
| Free Drop 30 Foot - Top | 7c | 4.04E+03 | 3.99E+03 |
| Free Drop 30 Foot - Bottom | 7a | 1.61E+04 | 1.56E+04 |
| Free Drop 30 Foot - Bottom | 7b | 1.61E+04 | 1.56E+04 |
| Free Drop 30 Foot - Bottom | 7c | 1.61E+04 | 1.56E+04 |
| Free Drop 30 Foot - Side | 7a | 4.46E+03 | 8.81E+03 |
| Free Drop 30 Foot - Side | 7b | 4.46E+03 | 8.81E+03 |
| Free Drop 30 Foot - Side | 7c | 4.46E+03 | 8.81E+03 |
| Free Drop 30 Foot - CG | 7a | 2.50E+03 | 3.24E+03 |
| Free Drop 30 Foot - CG | 7b | 2.50E+03 | 3.24E+03 |
| Free Drop 30 Foot - CG | 7c | 2.50E+03 | 3.24E+03 |
| Puncture | 8a | 4.46E+03 | 8.81E+03 |
| Puncture | 8b | 4.46E+03 | 8.81E+03 |
| Puncture | 8c | 4.46E+03 | 8.81E+03 |
| Thermal Fire - t = 0.5 Hr | 9 | 1.23E+02 | 1.33E+02 |
| Thermal Fire - t = 1.0 Hr | 9 | 1.23E+02 | 1.33E+02 |
| Thermal Fire - t = 1.5 Hr | 9 | 1.33E+02 | 1.23E+02 |
| Thermal Fire - t = 2.0 Hr | 9 | 1.33E+02 | 1.23E+02 |
| Thermal Fire - t = 2.5 Hr | 9 | 1.33E+02 | 1.23E+02 |
| Thermal Fire - t = 3.0 Hr | 9 | 1.33E+02 | 1.23E+02 |
| Maximum Stress Intensity | | 1.61E+04 | 1.56E+04 |

NOTES:

1. Refer to Reference [2.2], corresponding Table 2.10.9.91A.
2. $P_m < 2.4 \cdot S_m$ or $0.7 \cdot S_u = 44.8$ ksi
   $P_m + P_b < 3.6 \cdot S_m$ or $1.0 \cdot S_u = 64.4$ ksi
3. See Table 2.32 for combination index identification.

**Table 2.82. Summary of Stresses for Load Combinations Accident Conditions of Transport, Stress Point 10a (0.76 in. Wall Toroid)**

| Load Combination | Combination Index | Stress Intensity (psi) | |
|---|---|---|---|
| | | $P_m$ | $P_m + P_b$ |
| Free Drop 30 Foot - Top | 7a | 3.80E+03 | 3.16E+03 |
| Free Drop 30 Foot - Top | 7b | 3.80E+03 | 3.16E+03 |
| Free Drop 30 Foot - Top | 7c | 3.80E+03 | 3.16E+03 |
| Free Drop 30 Foot - Bottom | 7a | 2.57E+04 | 2.66E+04 |
| Free Drop 30 Foot - Bottom | 7b | 2.57E+04 | 2.66E+04 |
| Free Drop 30 Foot - Bottom | 7c | 2.57E+04 | 2.66E+04 |
| Free Drop 30 Foot - Side | 7a | 9.79E+03 | 7.44E+03 |
| Free Drop 30 Foot - Side | 7b | 9.79E+03 | 7.44E+03 |
| Free Drop 30 Foot - Side | 7c | 9.79E+03 | 7.44E+03 |
| Free Drop 30 Foot - CG | 7a | 4.25E+03 | 3.84E+03 |
| Free Drop 30 Foot - CG | 7b | 4.25E+03 | 3.84E+03 |
| Free Drop 30 Foot - CG | 7c | 4.25E+03 | 3.84E+03 |
| Puncture | 8a | 9.79E+03 | 7.44E+03 |
| Puncture | 8b | 9.79E+03 | 7.44E+03 |
| Puncture | 8c | 9.79E+03 | 7.44E+03 |
| Thermal Fire - t = 0.5 Hr | 9 | 6.32E+01 | 6.06E+01 |
| Thermal Fire - t = 1.0 Hr | 9 | 6.32E+01 | 6.06E+01 |
| Thermal Fire - t = 1.5 Hr | 9 | 6.06E+01 | 6.32E+01 |
| Thermal Fire - t = 2.0 Hr | 9 | 6.06E+01 | 6.32E+01 |
| Thermal Fire - t = 2.5 Hr | 9 | 6.06E+01 | 6.32E+01 |
| Thermal Fire - t = 3.0 Hr | 9 | 6.06E+01 | 6.32E+01 |
| Maximum Stress Intensity | | 2.57E+04 | 2.66E+04 |

NOTES:

1. Refer to Reference [2.2], corresponding Table 2.10.9.92A.
2. $P_m < 2.4 \cdot S_m$ or $0.7 \cdot S_u = 44.8$ ksi
   $P_m + P_b < 3.6 \cdot S_m$ or $1.0 \cdot S_u = 64.4$ ksi
3. See Table 2.32 for combination index identification.

**Table 2.83. Summary of Stresses for Load Combinations Accident Conditions of Transport, Stress Point 10b (0.76 in. Wall Toroid)**

| Load Combination | Combination Index | Stress Intensity (psi) | |
|---|---|---|---|
| | | $P_m$ | $P_m + P_b$ |
| Free Drop 30 Foot - Top | 7a | 3.80E+03 | 4.44E+03 |
| Free Drop 30 Foot - Top | 7b | 3.80E+03 | 4.44E+03 |
| Free Drop 30 Foot - Top | 7c | 3.80E+03 | 4.44E+03 |
| Free Drop 30 Foot - Bottom | 7a | 2.57E+04 | 2.48E+04 |
| Free Drop 30 Foot - Bottom | 7b | 2.57E+04 | 2.48E+04 |
| Free Drop 30 Foot - Bottom | 7c | 2.57E+04 | 2.48E+04 |
| Free Drop 30 Foot - Side | 7a | 9.79E+03 | 1.25E+04 |
| Free Drop 30 Foot - Side | 7b | 9.79E+03 | 1.25E+04 |
| Free Drop 30 Foot - Side | 7c | 9.79E+03 | 1.25E+04 |
| Free Drop 30 Foot - CG | 7a | 4.25E+03 | 4.68E+03 |
| Free Drop 30 Foot - CG | 7b | 4.25E+03 | 4.68E+03 |
| Free Drop 30 Foot - CG | 7c | 4.25E+03 | 4.68E+03 |
| Puncture | 8a | 9.79E+03 | 1.25E+04 |
| Puncture | 8b | 9.79E+03 | 1.25E+04 |
| Puncture | 8c | 9.79E+03 | 1.25E+04 |
| Thermal Fire - t = 0.5 Hr | 9 | 5.80E+01 | 6.06E+01 |
| Thermal Fire - t = 1.0 Hr | 9 | 5.80E+01 | 6.06E+01 |
| Thermal Fire - t = 1.5 Hr | 9 | 6.06E+01 | 5.80E+01 |
| Thermal Fire - t = 2.0 Hr | 9 | 6.06E+01 | 5.80E+01 |
| Thermal Fire - t = 2.5 Hr | 9 | 6.06E+01 | 5.80E+01 |
| Thermal Fire - t = 3.0 Hr | 9 | 6.06E+01 | 5.80E+01 |
| Maximum Stress Intensity | | 2.57E+04 | 2.48E+04 |

NOTES:

1. Refer to Reference [2.2], corresponding Table 2.10.9.93A.
2. $P_m < 2.4 \cdot S_m$ or $0.7 \cdot S_u = 44.8$ ksi
   $P_m + P_b < 3.6 \cdot S_m$ or $1.0 \cdot S_u = 64.4$ ksi
3. See Table 2.32 for combination index identification.

**Table 2.84. Summary of Stresses for Load Combinations Accident Conditions of Transport, Stress Point 11a (0.76 in. Wall Toroid)**

| Load Combination | Combination Index | Stress Intensity (psi) | |
|---|---|---|---|
| | | $P_m$ | $P_m + P_b$ |
| Free Drop 30 Foot - Top | 7a | 9.65E+03 | 9.17E+03 |
| Free Drop 30 Foot - Top | 7b | 9.65E+03 | 9.17E+03 |
| Free Drop 30 Foot - Top | 7c | 9.65E+03 | 9.17E+03 |
| Free Drop 30 Foot - Bottom | 7a | 8.67E+03 | 9.18E+03 |
| Free Drop 30 Foot - Bottom | 7b | 8.67E+03 | 9.18E+03 |
| Free Drop 30 Foot - Bottom | 7c | 8.67E+03 | 9.18E+03 |
| Free Drop 30 Foot - Side | 7a | 5.71E+03 | 1.87E+03 |
| Free Drop 30 Foot - Side | 7b | 5.71E+03 | 1.87E+03 |
| Free Drop 30 Foot - Side | 7c | 5.71E+03 | 1.87E+03 |
| Free Drop 30 Foot - CG | 7a | 2.97E+03 | 2.24E+03 |
| Free Drop 30 Foot - CG | 7b | 2.97E+03 | 2.24E+03 |
| Free Drop 30 Foot - CG | 7c | 2.97E+03 | 2.24E+03 |
| Puncture | 8a | 5.71E+03 | 1.87E+03 |
| Puncture | 8b | 5.71E+03 | 1.87E+03 |
| Puncture | 8c | 5.71E+03 | 1.87E+03 |
| Thermal Fire - t = 0.5 Hr | 9 | 1.42E+02 | 1.31E+02 |
| Thermal Fire - t = 1.0 Hr | 9 | 1.42E+02 | 1.31E+02 |
| Thermal Fire - t = 1.5 Hr | 9 | 1.31E+02 | 1.42E+02 |
| Thermal Fire - t = 2.0 Hr | 9 | 1.31E+02 | 1.42E+02 |
| Thermal Fire - t = 2.5 Hr | 9 | 1.31E+02 | 1.42E+02 |
| Thermal Fire - t = 3.0 Hr | 9 | 1.31E+02 | 1.42E+02 |
| Maximum Stress Intensity | | 9.65E+03 | 9.18E+03 |

NOTES:

1. Refer to Reference [2.2], corresponding Table 2.10.9.94A.
2. $P_m < 2.4 \cdot S_m$ or $0.7 \cdot S_u = 44.8$ ksi
   $P_m + P_b < 3.6 \cdot S_m$ or $1.0 \cdot S_u = 64.4$ ksi
3. See Table 2.32 for combination index identification.

**Table 2.85. Summary of Stresses for Load Combinations Accident Conditions of Transport, Stress Point 11b (0.76 in. Wall Toroid)**

| Load Combination | Combination Index | Stress Intensity (psi) | |
|---|---|---|---|
| | | $P_m$ | $P_m + P_b$ |
| Free Drop 30 Foot - Top | 7a | 9.65E+03 | 1.01E+04 |
| Free Drop 30 Foot - Top | 7b | 9.65E+03 | 1.01E+04 |
| Free Drop 30 Foot - Top | 7c | 9.65E+03 | 1.01E+04 |
| Free Drop 30 Foot - Bottom | 7a | 8.67E+03 | 8.17E+03 |
| Free Drop 30 Foot - Bottom | 7b | 8.67E+03 | 8.17E+03 |
| Free Drop 30 Foot - Bottom | 7c | 8.67E+03 | 8.17E+03 |
| Free Drop 30 Foot - Side | 7a | 5.71E+03 | 1.04E+04 |
| Free Drop 30 Foot - Side | 7b | 5.71E+03 | 1.04E+04 |
| Free Drop 30 Foot - Side | 7c | 5.71E+03 | 1.04E+04 |
| Free Drop 30 Foot - CG | 7a | 2.97E+03 | 3.72E+03 |
| Free Drop 30 Foot - CG | 7b | 2.97E+03 | 3.72E+03 |
| Free Drop 30 Foot - CG | 7c | 2.97E+03 | 3.72E+03 |
| Puncture | 8a | 5.71E+03 | 1.04E+04 |
| Puncture | 8b | 5.71E+03 | 1.04E+04 |
| Puncture | 8c | 5.71E+03 | 1.04E+04 |
| Thermal Fire - t = 0.5 Hr | 9 | 1.20E+02 | 1.31E+02 |
| Thermal Fire - t = 1.0 Hr | 9 | 1.20E+02 | 1.31E+02 |
| Thermal Fire - t = 1.5 Hr | 9 | 1.31E+02 | 1.20E+02 |
| Thermal Fire - t = 2.0 Hr | 9 | 1.31E+02 | 1.20E+02 |
| Thermal Fire - t = 2.5 Hr | 9 | 1.31E+02 | 1.20E+02 |
| Thermal Fire - t = 3.0 Hr | 9 | 1.31E+02 | 1.20E+02 |
| Maximum Stress Intensity | | 9.65E+03 | 1.04E+04 |

NOTES:

1. Refer to Reference [2.2], corresponding Table 2.10.9.95A.
2. $P_m < 2.4 \cdot S_m$ or $0.7 \cdot S_u = 44.8$ ksi
   $P_m + P_b < 3.6 \cdot S_m$ or $1.0 \cdot S_u = 64.4$ ksi
3. See Table 2.32 for combination index identification.

**Table 2.86. Summary of Stresses for Load Combinations Accident Conditions of Transport, Stress Point 12a (0.76 in. Wall Toroid)**

| Load Combination | Combination Index | Stress Intensity (psi) | |
|---|---|---|---|
| | | $P_m$ | $P_m + P_b$ |
| Free Drop 30 Foot - Top | 7a | 1.47E+04 | 1.39E+04 |
| Free Drop 30 Foot - Top | 7b | 1.47E+04 | 1.39E+04 |
| Free Drop 30 Foot - Top | 7c | 1.47E+04 | 1.39E+04 |
| Free Drop 30 Foot - Bottom | 7a | 1.43E+04 | 1.51E+04 |
| Free Drop 30 Foot - Bottom | 7b | 1.43E+04 | 1.51E+04 |
| Free Drop 30 Foot - Bottom | 7c | 1.43E+04 | 1.51E+04 |
| Free Drop 30 Foot - Side | 7a | 1.06E+04 | 8.52E+03 |
| Free Drop 30 Foot - Side | 7b | 1.06E+04 | 8.52E+03 |
| Free Drop 30 Foot - Side | 7c | 1.06E+04 | 8.52E+03 |
| Free Drop 30 Foot - CG | 7a | 4.69E+03 | 4.32E+03 |
| Free Drop 30 Foot - CG | 7b | 4.69E+03 | 4.32E+03 |
| Free Drop 30 Foot - CG | 7c | 4.69E+03 | 4.32E+03 |
| Puncture | 8a | 1.06E+04 | 8.52E+03 |
| Puncture | 8b | 1.06E+04 | 8.52E+03 |
| Puncture | 8c | 1.06E+04 | 8.52E+03 |
| Thermal Fire - t = 0.5 Hr | 9 | 6.16E+01 | 5.88E+01 |
| Thermal Fire - t = 1.0 Hr | 9 | 6.16E+01 | 5.88E+01 |
| Thermal Fire - t = 1.5 Hr | 9 | 5.88E+01 | 6.16E+01 |
| Thermal Fire - t = 2.0 Hr | 9 | 5.88E+01 | 6.16E+01 |
| Thermal Fire - t = 2.5 Hr | 9 | 5.88E+01 | 6.16E+01 |
| Thermal Fire - t = 3.0 Hr | 9 | 5.88E+01 | 6.16E+01 |
| Maximum Stress Intensity | | 1.47E+04 | 1.51E+04 |

NOTES:

1. Refer to Reference [2.2], corresponding Table 2.10.9.96A.
2. $P_m < 2.4 \cdot S_m$ or $0.7 \cdot S_u = 44.8$ ksi
   $P_m + P_b < 3.6 \cdot S_m$ or $1.0 \cdot S_u = 64.4$ ksi
3. See Table 2.32 for combination index identification.

**Table 2.87. Summary of Stresses for Load Combinations Accident Conditions of Transport, Stress Point 12b (0.76 in. Wall Toroid)**

| Load Combination | Combination Index | Stress Intensity (psi) | |
|---|---|---|---|
| | | $P_m$ | $P_m + P_b$ |
| Free Drop 30 Foot - Top | 7a | 1.47E+04 | 1.54E+04 |
| Free Drop 30 Foot - Top | 7b | 1.47E+04 | 1.54E+04 |
| Free Drop 30 Foot - Top | 7c | 1.47E+04 | 1.54E+04 |
| Free Drop 30 Foot - Bottom | 7a | 1.43E+04 | 1.36E+04 |
| Free Drop 30 Foot - Bottom | 7b | 1.43E+04 | 1.36E+04 |
| Free Drop 30 Foot - Bottom | 7c | 1.43E+04 | 1.36E+04 |
| Free Drop 30 Foot - Side | 7a | 1.06E+04 | 1.30E+04 |
| Free Drop 30 Foot - Side | 7b | 1.06E+04 | 1.30E+04 |
| Free Drop 30 Foot - Side | 7c | 1.06E+04 | 1.30E+04 |
| Free Drop 30 Foot - CG | 7a | 4.69E+03 | 5.09E+03 |
| Free Drop 30 Foot - CG | 7b | 4.69E+03 | 5.09E+03 |
| Free Drop 30 Foot - CG | 7c | 4.69E+03 | 5.09E+03 |
| Puncture | 8a | 1.06E+04 | 1.30E+04 |
| Puncture | 8b | 1.06E+04 | 1.30E+04 |
| Puncture | 8c | 1.06E+04 | 1.30E+04 |
| Thermal Fire - t = 0.5 Hr | 9 | 5.59E+01 | 5.88E+01 |
| Thermal Fire - t = 1.0 Hr | 9 | 5.59E+01 | 5.88E+01 |
| Thermal Fire - t = 1.5 Hr | 9 | 5.88E+01 | 5.59E+01 |
| Thermal Fire - t = 2.0 Hr | 9 | 5.88E+01 | 5.59E+01 |
| Thermal Fire - t = 2.5 Hr | 9 | 5.88E+01 | 5.59E+01 |
| Thermal Fire - t = 3.0 Hr | 9 | 5.88E+01 | 5.59E+01 |
| Maximum Stress Intensity | | 1.47E+04 | 1.54E+04 |

NOTES:

1. Refer to Reference [2.2], corresponding Table 2.10.9.97A.
2. $P_m < 2.4 \cdot S_m$ or $0.7 \cdot S_u = 44.8$ ksi
   $P_m + P_b < 3.6 \cdot S_m$ or $1.0 \cdot S_u = 64.4$ ksi
3. See Table 2.32 for combination index identification.

**Table 2.88. Summary of Stresses for Load Combinations Accident Conditions of Transport, Stress Point 13a (0.76 in. Wall Toroid)**

| Load Combination | Combination Index | Stress Intensity (psi) | |
|---|---|---|---|
| | | $P_m$ | $P_m + P_b$ |
| Free Drop 30 Foot - Top | 7a | 1.69E+04 | 1.64E+04 |
| Free Drop 30 Foot - Top | 7b | 1.69E+04 | 1.64E+04 |
| Free Drop 30 Foot - Top | 7c | 1.69E+04 | 1.64E+04 |
| Free Drop 30 Foot - Bottom | 7a | 6.28E+03 | 6.26E+03 |
| Free Drop 30 Foot - Bottom | 7b | 6.28E+03 | 6.26E+03 |
| Free Drop 30 Foot - Bottom | 7c | 6.28E+03 | 6.26E+03 |
| Free Drop 30 Foot - Side | 7a | 2.67E+03 | 2.93E+03 |
| Free Drop 30 Foot - Side | 7b | 2.67E+03 | 2.93E+03 |
| Free Drop 30 Foot - Side | 7c | 2.67E+03 | 2.93E+03 |
| Free Drop 30 Foot - CG | 7a | 2.35E+03 | 1.76E+03 |
| Free Drop 30 Foot - CG | 7b | 2.35E+03 | 1.76E+03 |
| Free Drop 30 Foot - CG | 7c | 2.35E+03 | 1.76E+03 |
| Puncture | 8a | 2.67E+03 | 2.93E+03 |
| Puncture | 8b | 2.67E+03 | 2.93E+03 |
| Puncture | 8c | 2.67E+03 | 2.93E+03 |
| Thermal Fire - t = 0.5 Hr | 9 | 1.44E+02 | 1.34E+02 |
| Thermal Fire - t = 1.0 Hr | 9 | 1.44E+02 | 1.34E+02 |
| Thermal Fire - t = 1.5 Hr | 9 | 1.34E+02 | 1.44E+02 |
| Thermal Fire - t = 2.0 Hr | 9 | 1.34E+02 | 1.44E+02 |
| Thermal Fire - t = 2.5 Hr | 9 | 1.34E+02 | 1.44E+02 |
| Thermal Fire - t = 3.0 Hr | 9 | 1.34E+02 | 1.44E+02 |
| Maximum Stress Intensity | | 1.69E+04 | 1.64E+04 |

NOTES:

1. Refer to Reference [2.2], corresponding Table 2.10.9.98A.
2. $P_m < 2.4 \cdot S_m$ or $0.7 \cdot S_u = 44.8$ ksi
   $P_m + P_b < 3.6 \cdot S_m$ or $1.0 \cdot S_u = 64.4$ ksi
3. See Table 2.32 for combination index identification.

**Table 2.89. Summary of Stresses for Load Combinations Accident Conditions of Transport, Stress Point 13b (0.76 in. Wall Toroid)**

| Load Combination | Combination Index | Stress Intensity (psi) | |
|---|---|---|---|
| | | $P_m$ | $P_m + P_b$ |
| Free Drop 30 Foot - Top | 7a | 1.69E+04 | 1.74E+04 |
| Free Drop 30 Foot - Top | 7b | 1.69E+04 | 1.74E+04 |
| Free Drop 30 Foot - Top | 7c | 1.69E+04 | 1.74E+04 |
| Free Drop 30 Foot - Bottom | 7a | 6.28E+03 | 6.29E+03 |
| Free Drop 30 Foot - Bottom | 7b | 6.28E+03 | 6.29E+03 |
| Free Drop 30 Foot - Bottom | 7c | 6.28E+03 | 6.29E+03 |
| Free Drop 30 Foot - Side | 7a | 2.67E+03 | 4.70E+03 |
| Free Drop 30 Foot - Side | 7b | 2.67E+03 | 4.70E+03 |
| Free Drop 30 Foot - Side | 7c | 2.67E+03 | 4.70E+03 |
| Free Drop 30 Foot - CG | 7a | 2.35E+03 | 2.96E+03 |
| Free Drop 30 Foot - CG | 7b | 2.35E+03 | 2.96E+03 |
| Free Drop 30 Foot - CG | 7c | 2.35E+03 | 2.96E+03 |
| Puncture | 8a | 2.67E+03 | 4.70E+03 |
| Puncture | 8b | 2.67E+03 | 4.70E+03 |
| Puncture | 8c | 2.67E+03 | 4.70E+03 |
| Thermal Fire - t = 0.5 Hr | 9 | 1.25E+02 | 1.34E+02 |
| Thermal Fire - t = 1.0 Hr | 9 | 1.25E+02 | 1.34E+02 |
| Thermal Fire - t = 1.5 Hr | 9 | 1.34E+02 | 1.25E+02 |
| Thermal Fire - t = 2.0 Hr | 9 | 1.34E+02 | 1.25E+02 |
| Thermal Fire - t = 2.5 Hr | 9 | 1.34E+02 | 1.25E+02 |
| Thermal Fire - t = 3.0 Hr | 9 | 1.34E+02 | 1.25E+02 |
| Maximum Stress Intensity | | 1.69E+04 | 1.74E+04 |

NOTES:

1. Refer to Reference [2.2], corresponding Table 2.10.9.99A.
2. $P_m < 2.4 \cdot S_m$ or $0.7 \cdot S_u = 44.8$ ksi
   $P_m + P_b < 3.6 \cdot S_m$ or $1.0 \cdot S_u = 64.4$ ksi
3. See Table 2.32 for combination index identification.

**Table 2.90. Summary of Stresses for Load Combinations Accident Conditions of Transport, Stress Point 14a (0.76 in. Wall Toroid)**

| Load Combination | Combination Index | Stress Intensity (psi) | |
|---|---|---|---|
| | | $P_m$ | $P_m + P_b$ |
| Free Drop 30 Foot - Top | 7a | 2.63E+04 | 2.53E+04 |
| Free Drop 30 Foot - Top | 7b | 2.63E+04 | 2.53E+04 |
| Free Drop 30 Foot - Top | 7c | 2.63E+04 | 2.53E+04 |
| Free Drop 30 Foot - Bottom | 7a | 3.68E+03 | 4.31E+03 |
| Free Drop 30 Foot - Bottom | 7b | 3.68E+03 | 4.31E+03 |
| Free Drop 30 Foot - Bottom | 7c | 3.68E+03 | 4.31E+03 |
| Free Drop 30 Foot - Side | 7a | 7.28E+03 | 4.68E+03 |
| Free Drop 30 Foot - Side | 7b | 7.28E+03 | 4.68E+03 |
| Free Drop 30 Foot - Side | 7c | 7.28E+03 | 4.68E+03 |
| Free Drop 30 Foot - CG | 7a | 4.30E+03 | 4.00E+03 |
| Free Drop 30 Foot - CG | 7b | 4.30E+03 | 4.00E+03 |
| Free Drop 30 Foot - CG | 7c | 4.30E+03 | 4.00E+03 |
| Puncture | 8a | 7.28E+03 | 4.68E+03 |
| Puncture | 8b | 7.28E+03 | 4.68E+03 |
| Puncture | 8c | 7.28E+03 | 4.68E+03 |
| Thermal Fire - t = 0.5 Hr | 9 | 6.36E+01 | 6.12E+01 |
| Thermal Fire - t = 1.0 Hr | 9 | 6.36E+01 | 6.12E+01 |
| Thermal Fire - t = 1.5 Hr | 9 | 6.12E+01 | 6.36E+01 |
| Thermal Fire - t = 2.0 Hr | 9 | 6.12E+01 | 6.36E+01 |
| Thermal Fire - t = 2.5 Hr | 9 | 6.12E+01 | 6.36E+01 |
| Thermal Fire - t = 3.0 Hr | 9 | 6.12E+01 | 6.36E+01 |
| Maximum Stress Intensity | | 2.63E+04 | 2.53E+04 |

NOTES:

1. Refer to Reference [2.2], corresponding Table 2.10.9.100A.
2. $P_m < 2.4 \cdot S_m$ or $0.7 \cdot S_u = 44.8$ ksi
   $P_m + P_b < 3.6 \cdot S_m$ or $1.0 \cdot S_u = 64.4$ ksi
3. See Table 2.32 for combination index identification.

**Table 2.91. Summary of Stresses for Load Combinations Accident Conditions of Transport, Stress Point 14b (0.76 in. Wall Toroid)**

| Load Combination | Combination Index | Stress Intensity (psi) | |
|---|---|---|---|
| | | $P_m$ | $P_m + P_b$ |
| Free Drop 30 Foot - Top | 7a | 2.63E+04 | 2.73E+04 |
| Free Drop 30 Foot - Top | 7b | 2.63E+04 | 2.73E+04 |
| Free Drop 30 Foot - Top | 7c | 2.63E+04 | 2.73E+04 |
| Free Drop 30 Foot - Bottom | 7a | 3.68E+03 | 3.04E+03 |
| Free Drop 30 Foot - Bottom | 7b | 3.68E+03 | 3.04E+03 |
| Free Drop 30 Foot - Bottom | 7c | 3.68E+03 | 3.04E+03 |
| Free Drop 30 Foot - Side | 7a | 7.28E+03 | 1.03E+04 |
| Free Drop 30 Foot - Side | 7b | 7.28E+03 | 1.03E+04 |
| Free Drop 30 Foot - Side | 7c | 7.28E+03 | 1.03E+04 |
| Free Drop 30 Foot - CG | 7a | 4.30E+03 | 4.62E+03 |
| Free Drop 30 Foot - CG | 7b | 4.30E+03 | 4.62E+03 |
| Free Drop 30 Foot - CG | 7c | 4.30E+03 | 4.62E+03 |
| Puncture | 8a | 7.28E+03 | 1.03E+04 |
| Puncture | 8b | 7.28E+03 | 1.03E+04 |
| Puncture | 8c | 7.28E+03 | 1.03E+04 |
| Thermal Fire - t = 0.5 Hr | 9 | 5.88E+01 | 6.12E+01 |
| Thermal Fire - t = 1.0 Hr | 9 | 5.88E+01 | 6.12E+01 |
| Thermal Fire - t = 1.5 Hr | 9 | 6.12E+01 | 5.88E+01 |
| Thermal Fire - t = 2.0 Hr | 9 | 6.12E+01 | 5.88E+01 |
| Thermal Fire - t = 2.5 Hr | 9 | 6.12E+01 | 5.88E+01 |
| Thermal Fire - t = 3.0 Hr | 9 | 6.12E+01 | 5.88E+01 |
| Maximum Stress Intensity | | 2.63E+04 | 2.73E+04 |

NOTES:

1. Refer to Reference [2.2], corresponding Table 2.10.9.101A.
2. $P_m < 2.4 \cdot S_m$ or $0.7 \cdot S_u = 44.8$ ksi
   $P_m + P_b < 3.6 \cdot S_m$ or $1.0 \cdot S_u = 64.4$ ksi
3. See Table 2.32 for combination index identification.

**Table 2.92. Summary of Stresses for Load Combinations Accident Conditions of Transport, Stress Point 15a (0.76 in. Wall Toroid)**

| Load Combination | Combination Index | Stress Intensity (psi) | |
|---|---|---|---|
| | | $P_m$ | $P_m + P_b$ |
| Free Drop 30 Foot - Top | 7a | 1.47E+04 | 1.69E+04 |
| Free Drop 30 Foot - Top | 7b | 1.47E+04 | 1.69E+04 |
| Free Drop 30 Foot - Top | 7c | 1.47E+04 | 1.69E+04 |
| Free Drop 30 Foot - Bottom | 7a | 5.58E+03 | 5.80E+03 |
| Free Drop 30 Foot - Bottom | 7b | 5.58E+03 | 5.80E+03 |
| Free Drop 30 Foot - Bottom | 7c | 5.58E+03 | 5.80E+03 |
| Free Drop 30 Foot - Side | 7a | 1.88E+04 | 1.09E+04 |
| Free Drop 30 Foot - Side | 7b | 1.88E+04 | 1.09E+04 |
| Free Drop 30 Foot - Side | 7c | 1.88E+04 | 1.09E+04 |
| Free Drop 30 Foot - CG | 7a | 3.56E+03 | 3.03E+03 |
| Free Drop 30 Foot - CG | 7b | 3.56E+03 | 3.03E+03 |
| Free Drop 30 Foot - CG | 7c | 3.56E+03 | 3.03E+03 |
| Puncture | 8a | 1.88E+04 | 1.09E+04 |
| Puncture | 8b | 1.88E+04 | 1.09E+04 |
| Puncture | 8c | 1.88E+04 | 1.09E+04 |
| Thermal Fire - t = 0.5 Hr | 9 | 8.90E+01 | 4.51E+01 |
| Thermal Fire - t = 1.0 Hr | 9 | 8.90E+01 | 4.51E+01 |
| Thermal Fire - t = 1.5 Hr | 9 | 4.51E+01 | 8.90E+01 |
| Thermal Fire - t = 2.0 Hr | 9 | 4.51E+01 | 8.90E+01 |
| Thermal Fire - t = 2.5 Hr | 9 | 4.51E+01 | 8.90E+01 |
| Thermal Fire - t = 3.0 Hr | 9 | 4.51E+01 | 8.90E+01 |
| Maximum Stress Intensity | | 1.88E+04 | 1.69E+04 |

NOTES:

1. Refer to Reference [2.2], corresponding Table 2.10.9.102A.
2. $P_m < 2.4 \cdot S_m$ or $0.7 \cdot S_u = 44.8$ ksi
   $P_m + P_b < 3.6 \cdot S_m$ or $1.0 \cdot S_u = 64.4$ ksi
3. See Table 2.32 for combination index identification.

**Table 2.93. Summary of Stresses for Load Combinations Accident Conditions of Transport, Stress Point 15b (0.76 in. Wall Toroid)**

| Load Combination | Combination Index | Stress Intensity (psi) | |
|---|---|---|---|
| | | $P_m$ | $P_m + P_b$ |
| Free Drop 30 Foot - Top | 7a | 1.46E+04 | 1.22E+04 |
| Free Drop 30 Foot - Top | 7b | 1.46E+04 | 1.22E+04 |
| Free Drop 30 Foot - Top | 7c | 1.46E+04 | 1.22E+04 |
| Free Drop 30 Foot - Bottom | 7a | 5.58E+03 | 5.38E+03 |
| Free Drop 30 Foot - Bottom | 7b | 5.58E+03 | 5.38E+03 |
| Free Drop 30 Foot - Bottom | 7c | 5.58E+03 | 5.38E+03 |
| Free Drop 30 Foot - Side | 7a | 1.88E+04 | 3.54E+04 |
| Free Drop 30 Foot - Side | 7b | 1.88E+04 | 3.54E+04 |
| Free Drop 30 Foot - Side | 7c | 1.88E+04 | 3.54E+04 |
| Free Drop 30 Foot - CG | 7a | 3.56E+03 | 6.18E+03 |
| Free Drop 30 Foot - CG | 7b | 3.56E+03 | 6.18E+03 |
| Free Drop 30 Foot - CG | 7c | 3.56E+03 | 6.18E+03 |
| Puncture | 8a | 1.88E+04 | 3.54E+04 |
| Puncture | 8b | 1.88E+04 | 3.54E+04 |
| Puncture | 8c | 1.88E+04 | 3.54E+04 |
| Thermal Fire - t = 0.5 Hr | 9 | 1.25E+01 | 4.51E+01 |
| Thermal Fire - t = 1.0 Hr | 9 | 1.25E+01 | 4.51E+01 |
| Thermal Fire - t = 1.5 Hr | 9 | 4.51E+01 | 1.25E+01 |
| Thermal Fire - t = 2.0 Hr | 9 | 4.51E+01 | 1.25E+01 |
| Thermal Fire - t = 2.5 Hr | 9 | 4.51E+01 | 1.25E+01 |
| Thermal Fire - t = 3.0 Hr | 9 | 4.51E+01 | 1.25E+01 |
| Maximum Stress Intensity | | 1.88E+04 | 3.54E+04 |

NOTES:

1. Refer to Reference [2.2], corresponding Table 2.10.9.103A.
2. $P_m < 2.4 \cdot S_m$ or $0.7 \cdot S_u = 44.8$ ksi
   $P_m + P_b < 3.6 \cdot S_m$ or $1.0 \cdot S_u = 64.4$ ksi
3. See Table 2.32 for combination index identification.

**Table 2.94. Summary of Stresses for Load Combinations Accident Conditions of Transport, Stress Point 16a (0.76 in. Wall Toroid)**

| Load Combination | Combination Index | Stress Intensity (psi) | |
|---|---|---|---|
| | | $P_m$ | $P_m + P_b$ |
| Free Drop 30 Foot - Top | 7a | 1.62E+04 | 1.15E+04 |
| Free Drop 30 Foot - Top | 7b | 1.62E+04 | 1.15E+04 |
| Free Drop 30 Foot - Top | 7c | 1.62E+04 | 1.15E+04 |
| Free Drop 30 Foot - Bottom | 7a | 1.06E+03 | 1.12E+03 |
| Free Drop 30 Foot - Bottom | 7b | 1.06E+03 | 1.12E+03 |
| Free Drop 30 Foot - Bottom | 7c | 1.06E+03 | 1.12E+03 |
| Free Drop 30 Foot - Side | 7a | 3.41E+03 | 9.46E+03 |
| Free Drop 30 Foot - Side | 7b | 3.41E+03 | 9.46E+03 |
| Free Drop 30 Foot - Side | 7c | 3.41E+03 | 9.46E+03 |
| Free Drop 30 Foot - CG | 7a | 3.34E+03 | 2.89E+03 |
| Free Drop 30 Foot - CG | 7b | 3.34E+03 | 2.89E+03 |
| Free Drop 30 Foot - CG | 7c | 3.34E+03 | 2.89E+03 |
| Puncture | 8a | 3.41E+03 | 9.46E+03 |
| Puncture | 8b | 3.41E+03 | 9.46E+03 |
| Puncture | 8c | 3.41E+03 | 9.46E+03 |
| Thermal Fire - t = 0.5 Hr | 9 | 6.34E+01 | 3.42E+01 |
| Thermal Fire - t = 1.0 Hr | 9 | 6.34E+01 | 3.42E+01 |
| Thermal Fire - t = 1.5 Hr | 9 | 3.42E+01 | 6.34E+01 |
| Thermal Fire - t = 2.0 Hr | 9 | 3.42E+01 | 6.34E+01 |
| Thermal Fire - t = 2.5 Hr | 9 | 3.42E+01 | 6.34E+01 |
| Thermal Fire - t = 3.0 Hr | 9 | 3.42E+01 | 6.34E+01 |
| Maximum Stress Intensity | | 1.62E+04 | 1.15E+04 |

NOTES:

1. Refer to Reference [2.2], corresponding Table 2.10.9.104A.
2. $P_m < 2.4 \cdot S_m$ or $0.7 \cdot S_u = 44.8$ ksi
   $P_m + P_b < 3.6 \cdot S_m$ or $1.0 \cdot S_u = 64.4$ ksi
3. See Table 2.32 for combination index identification.

**Table 2.95. Summary of Stresses for Load Combinations Accident Conditions of Transport, Stress Point 16b (0.76 in. Wall Toroid)**

| Load Combination | Combination Index | Stress Intensity (psi) | |
|---|---|---|---|
| | | $P_m$ | $P_m + P_b$ |
| Free Drop 30 Foot - Top | 7a | 1.62E+04 | 2.78E+04 |
| Free Drop 30 Foot - Top | 7b | 1.62E+04 | 2.78E+04 |
| Free Drop 30 Foot - Top | 7c | 1.62E+04 | 2.78E+04 |
| Free Drop 30 Foot - Bottom | 7a | 1.06E+03 | 9.95E+02 |
| Free Drop 30 Foot - Bottom | 7b | 1.06E+03 | 9.95E+02 |
| Free Drop 30 Foot - Bottom | 7c | 1.06E+03 | 9.95E+02 |
| Free Drop 30 Foot - Side | 7a | 3.41E+03 | 6.43E+03 |
| Free Drop 30 Foot - Side | 7b | 3.41E+03 | 6.43E+03 |
| Free Drop 30 Foot - Side | 7c | 3.41E+03 | 6.43E+03 |
| Free Drop 30 Foot - CG | 7a | 3.34E+03 | 4.81E+03 |
| Free Drop 30 Foot - CG | 7b | 3.34E+03 | 4.81E+03 |
| Free Drop 30 Foot - CG | 7c | 3.34E+03 | 4.81E+03 |
| Puncture | 8a | 3.41E+03 | 6.43E+03 |
| Puncture | 8b | 3.41E+03 | 6.43E+03 |
| Puncture | 8c | 3.41E+03 | 6.43E+03 |
| Thermal Fire - t = 0.5 Hr | 9 | 6.92E+00 | 3.42E+01 |
| Thermal Fire - t = 1.0 Hr | 9 | 6.92E+00 | 3.42E+01 |
| Thermal Fire - t = 1.5 Hr | 9 | 3.42E+01 | 6.92E+00 |
| Thermal Fire - t = 2.0 Hr | 9 | 3.42E+01 | 6.92E+00 |
| Thermal Fire - t = 2.5 Hr | 9 | 3.42E+01 | 6.92E+00 |
| Thermal Fire - t = 3.0 Hr | 9 | 3.42E+01 | 6.92E+00 |
| Maximum Stress Intensity | | 1.62E+04 | 2.78E+04 |

NOTES:

1. Refer to Reference [2.2], corresponding Table 2.10.9.105A.
2. $P_m < 2.4 \cdot S_m$ or $0.7 \cdot S_u = 44.8$ ksi
   $P_m + P_b < 3.6 \cdot S_m$ or $1.0 \cdot S_u = 64.4$ ksi
3. See Table 2.32 for combination index identification.

**Table 2.96. Summary of Stresses for Load Combinations Accident Conditions of Transport, Stress Point 17 (0.76 in. Wall Toroid)**

| Load Combination | Combination Index | Stress Intensity (psi) | |
|---|---|---|---|
| | | $P_m$ | $P_m + P_b$ |
| Free Drop 30 Foot - Top | 7a | 1.12E+04 | 1.12E+04 |
| Free Drop 30 Foot - Top | 7b | 1.12E+04 | 1.12E+04 |
| Free Drop 30 Foot - Top | 7c | 1.12E+04 | 1.12E+04 |
| Free Drop 30 Foot - Bottom | 7a | 7.48E+02 | 7.48E+02 |
| Free Drop 30 Foot - Bottom | 7b | 7.48E+02 | 7.48E+02 |
| Free Drop 30 Foot - Bottom | 7c | 7.48E+02 | 7.48E+02 |
| Free Drop 30 Foot - Side | 7a | 3.33E+03 | 3.33E+03 |
| Free Drop 30 Foot - Side | 7b | 3.33E+03 | 3.33E+03 |
| Free Drop 30 Foot - Side | 7c | 3.33E+03 | 3.33E+03 |
| Free Drop 30 Foot - CG | 7a | 4.10E+03 | 4.10E+03 |
| Free Drop 30 Foot - CG | 7b | 4.10E+03 | 4.10E+03 |
| Free Drop 30 Foot - CG | 7c | 4.10E+03 | 4.10E+03 |
| Puncture | 8a | 3.33E+03 | 3.33E+03 |
| Puncture | 8b | 3.33E+03 | 3.33E+03 |
| Puncture | 8c | 3.33E+03 | 3.33E+03 |
| Thermal Fire - t = 0.5 Hr | 9 | 7.28E+01 | 7.28E+01 |
| Thermal Fire - t = 1.0 Hr | 9 | 7.28E+01 | 7.28E+01 |
| Thermal Fire - t = 1.5 Hr | 9 | 7.28E+01 | 7.28E+01 |
| Thermal Fire - t = 2.0 Hr | 9 | 7.28E+01 | 7.28E+01 |
| Thermal Fire - t = 2.5 Hr | 9 | 7.28E+01 | 7.28E+01 |
| Thermal Fire - t = 3.0 Hr | 9 | 7.28E+01 | 7.28E+01 |
| Maximum Stress Intensity | | 1.12E+04 | 1.12E+04 |

NOTES:

1. Refer to Reference [2.2], corresponding Table 2.10.9.106A.
2. $P_m < 2.4 \cdot S_m$ or $0.7 \cdot S_u = 44.8$ ksi
   $P_m + P_b < 3.6 \cdot S_m$ or $1.0 \cdot S_u = 64.4$ ksi
3. See Table 2.32 for combination index identification.
4. Stresses are given at the centroid of the element, therefore, the same stress value is used for $P_m$ and $P_m + P_b$.

**Table 2.97. Summary of Stresses for Load Combinations Accident Conditions of Transport, Stress Point 18 (0.76 in. Wall Toroid)**

| Load Combination | Combination Index | Stress Intensity (psi) | |
|---|---|---|---|
| | | $P_m$ | $P_m + P_b$ |
| Free Drop 30 Foot - Top | 7a | 1.05E+04 | 1.05E+04 |
| Free Drop 30 Foot - Top | 7b | 1.05E+04 | 1.05E+04 |
| Free Drop 30 Foot - Top | 7c | 1.05E+04 | 1.05E+04 |
| Free Drop 30 Foot - Bottom | 7a | 2.02E+02 | 2.02E+02 |
| Free Drop 30 Foot - Bottom | 7b | 2.02E+02 | 2.02E+02 |
| Free Drop 30 Foot - Bottom | 7c | 2.02E+02 | 2.02E+02 |
| Free Drop 30 Foot - Side | 7a | 5.80E+03 | 5.80E+03 |
| Free Drop 30 Foot - Side | 7b | 5.80E+03 | 5.80E+03 |
| Free Drop 30 Foot - Side | 7c | 5.80E+03 | 5.80E+03 |
| Free Drop 30 Foot - CG | 7a | 5.63E+03 | 5.63E+03 |
| Free Drop 30 Foot - CG | 7b | 5.63E+03 | 5.63E+03 |
| Free Drop 30 Foot - CG | 7c | 5.63E+03 | 5.63E+03 |
| Puncture | 8a | 5.80E+03 | 5.80E+03 |
| Puncture | 8b | 5.80E+03 | 5.80E+03 |
| Puncture | 8c | 5.80E+03 | 5.80E+03 |
| Thermal Fire - t = 0.5 Hr | 9 | 1.27E+01 | 1.27E+01 |
| Thermal Fire - t = 1.0 Hr | 9 | 1.27E+01 | 1.27E+01 |
| Thermal Fire - t = 1.5 Hr | 9 | 1.27E+01 | 1.27E+01 |
| Thermal Fire - t = 2.0 Hr | 9 | 1.27E+01 | 1.27E+01 |
| Thermal Fire - t = 2.5 Hr | 9 | 1.27E+01 | 1.27E+01 |
| Thermal Fire - t = 3.0 Hr | 9 | 1.27E+01 | 1.27E+01 |
| Maximum Stress Intensity | | 1.05E+04 | 1.05E+04 |

NOTES:

1. Refer to Reference [2.2], corresponding Table 2.10.9.107A.
2. $P_m < 2.4 \cdot S_m$ or $0.7 \cdot S_u = 44.8$ ksi
   $P_m + P_b < 3.6 \cdot S_m$ or $1.0 \cdot S_u = 64.4$ ksi
3. See Table 2.32 for combination index identification.
4. Stresses are given at the centroid of the element, therefore, the same stress value is used for $P_m$ and $P_m + P_b$.

**Table 2.98. Summary of Stresses for Load Combinations Accident Conditions of Transport, Stress Point 19 (0.76 in. Wall Toroid)**

| Load Combination | Combination Index | Stress Intensity (psi) | |
|---|---|---|---|
| | | $P_m$ | $P_m + P_b$ |
| Free Drop 30 Foot - Top | 7a | 1.34E+04 | 1.34E+04 |
| Free Drop 30 Foot - Top | 7b | 1.34E+04 | 1.34E+04 |
| Free Drop 30 Foot - Top | 7c | 1.34E+04 | 1.34E+04 |
| Free Drop 30 Foot - Bottom | 7a | 2.23E+02 | 2.23E+02 |
| Free Drop 30 Foot - Bottom | 7b | 2.23E+02 | 2.23E+02 |
| Free Drop 30 Foot - Bottom | 7c | 2.23E+02 | 2.23E+02 |
| Free Drop 30 Foot - Side | 7a | 2.79E+03 | 2.79E+03 |
| Free Drop 30 Foot - Side | 7b | 2.79E+03 | 2.79E+03 |
| Free Drop 30 Foot - Side | 7c | 2.79E+03 | 2.79E+03 |
| Free Drop 30 Foot - CG | 7a | 9.49E+03 | 9.49E+03 |
| Free Drop 30 Foot - CG | 7b | 9.49E+03 | 9.49E+03 |
| Free Drop 30 Foot - CG | 7c | 9.49E+03 | 9.49E+03 |
| Puncture | 8a | 2.79E+03 | 2.79E+03 |
| Puncture | 8b | 2.79E+03 | 2.79E+03 |
| Puncture | 8c | 2.79E+03 | 2.79E+03 |
| Thermal Fire - t = 0.5 Hr | 9 | 1.45E+01 | 1.45E+01 |
| Thermal Fire - t = 1.0 Hr | 9 | 1.45E+01 | 1.45E+01 |
| Thermal Fire - t = 1.5 Hr | 9 | 1.45E+01 | 1.45E+01 |
| Thermal Fire - t = 2.0 Hr | 9 | 1.45E+01 | 1.45E+01 |
| Thermal Fire - t = 2.5 Hr | 9 | 1.45E+01 | 1.45E+01 |
| Thermal Fire - t = 3.0 Hr | 9 | 1.45E+01 | 1.45E+01 |
| Maximum Stress Intensity | | 1.34E+04 | 1.34E+04 |

NOTES:

1. Refer to Reference [2.2], corresponding Table 2.10.9.108A.
2. $P_m < 2.4 \cdot S_m$ or $0.7 \cdot S_u = 44.8$ ksi
   $P_m + P_b < 3.6 \cdot S_m$ or $1.0 \cdot S_u = 64.4$ ksi
3. See Table 2.32 for combination index identification.
4. Stresses are given at the centroid of the element, therefore, the same stress value is used for $P_m$ and $P_m + P_b$.

**Table 2.99. Summary of Stresses for Load Combinations Accident Conditions of Transport, Stress Point 20 (0.76 in. Wall Toroid)**

| Load Combination | Combination Index | Stress Intensity (psi) | |
|---|---|---|---|
| | | $P_m$ | $P_m + P_b$ |
| Free Drop 30 Foot - Top | 7a | 1.97E+04 | 1.97E+04 |
| Free Drop 30 Foot - Top | 7b | 1.97E+04 | 1.97E+04 |
| Free Drop 30 Foot - Top | 7c | 1.97E+04 | 1.97E+04 |
| Free Drop 30 Foot - Bottom | 7a | 2.37E+02 | 2.37E+02 |
| Free Drop 30 Foot - Bottom | 7b | 2.37E+02 | 2.37E+02 |
| Free Drop 30 Foot - Bottom | 7c | 2.37E+02 | 2.37E+02 |
| Free Drop 30 Foot - Side | 7a | 1.27E+03 | 1.27E+03 |
| Free Drop 30 Foot - Side | 7b | 1.27E+03 | 1.27E+03 |
| Free Drop 30 Foot - Side | 7c | 1.27E+03 | 1.27E+03 |
| Free Drop 30 Foot - CG | 7a | 5.56E+03 | 5.56E+03 |
| Free Drop 30 Foot - CG | 7b | 5.56E+03 | 5.56E+03 |
| Free Drop 30 Foot - CG | 7c | 5.56E+03 | 5.56E+03 |
| Puncture | 8a | 1.27E+03 | 1.27E+03 |
| Puncture | 8b | 1.27E+03 | 1.27E+03 |
| Puncture | 8c | 1.27E+03 | 1.27E+03 |
| Thermal Fire - t = 0.5 Hr | 9 | 8.74E+00 | 8.74E+00 |
| Thermal Fire - t = 1.0 Hr | 9 | 8.74E+00 | 8.74E+00 |
| Thermal Fire - t = 1.5 Hr | 9 | 8.74E+00 | 8.74E+00 |
| Thermal Fire - t = 2.0 Hr | 9 | 8.74E+00 | 8.74E+00 |
| Thermal Fire - t = 2.5 Hr | 9 | 8.74E+00 | 8.74E+00 |
| Thermal Fire - t = 3.0 Hr | 9 | 8.74E+00 | 8.74E+00 |
| Maximum Stress Intensity | | 1.97E+04 | 1.97E+04 |

NOTES:

1. Refer to Reference [2.2], corresponding Table 2.10.9.109A.
2. $P_m < 2.4 \cdot S_m$ or $0.7 \cdot S_u = 44.8$ ksi
   $P_m + P_b < 3.6 \cdot S_m$ or $1.0 \cdot S_u = 64.4$ ksi
3. See Table 2.32 for combination index identification.
4. Stresses are given at the centroid of the element, therefore, the same stress value is used for $P_m$ and $P_m + P_b$.

**Table 2.100. Summary of Stresses for Load Combinations Accident Conditions of Transport, Stress Point 21 (0.76 in. Wall Toroid)**

| Load Combination | Combination Index | Stress Intensity (psi) | |
|---|---|---|---|
| | | $P_m$ | $P_m + P_b$ |
| Free Drop 30 Foot - Top | 7a | 2.45E+04 | 2.45E+04 |
| Free Drop 30 Foot - Top | 7b | 2.45E+04 | 2.45E+04 |
| Free Drop 30 Foot - Top | 7c | 2.45E+04 | 2.45E+04 |
| Free Drop 30 Foot - Bottom | 7a | 1.10E+03 | 1.10E+03 |
| Free Drop 30 Foot - Bottom | 7b | 1.10E+03 | 1.10E+03 |
| Free Drop 30 Foot - Bottom | 7c | 1.10E+03 | 1.10E+03 |
| Free Drop 30 Foot - Side | 7a | 2.86E+02 | 2.86E+02 |
| Free Drop 30 Foot - Side | 7b | 2.86E+02 | 2.86E+02 |
| Free Drop 30 Foot - Side | 7c | 2.86E+02 | 2.86E+02 |
| Free Drop 30 Foot - CG | 7a | 3.13E+02 | 3.13E+02 |
| Free Drop 30 Foot - CG | 7b | 3.13E+02 | 3.13E+02 |
| Free Drop 30 Foot - CG | 7c | 3.13E+02 | 3.13E+02 |
| Puncture | 8a | 2.86E+02 | 2.86E+02 |
| Puncture | 8b | 2.86E+02 | 2.86E+02 |
| Puncture | 8c | 2.86E+02 | 2.86E+02 |
| Thermal Fire - t = 0.5 Hr | 9 | 1.08E+02 | 1.08E+02 |
| Thermal Fire - t = 1.0 Hr | 9 | 1.08E+02 | 1.08E+02 |
| Thermal Fire - t = 1.5 Hr | 9 | 1.08E+02 | 1.08E+02 |
| Thermal Fire - t = 2.0 Hr | 9 | 1.08E+02 | 1.08E+02 |
| Thermal Fire - t = 2.5 Hr | 9 | 1.08E+02 | 1.08E+02 |
| Thermal Fire - t = 3.0 Hr | 9 | 1.08E+02 | 1.08E+02 |
| Maximum Stress Intensity | | 2.45E+04 | 2.45E+04 |

NOTES:

1. Refer to Reference [2.2], corresponding Table 2.10.9.110A.
2. $P_m < 2.4 \cdot S_m$ or $0.7 \cdot S_u = 44.8$ ksi
   $P_m + P_b < 3.6 \cdot S_m$ or $1.0 \cdot S_u = 64.4$ ksi
3. See Table 2.32 for combination index identification.
4. Stresses are given at the centroid of the element, therefore, the same stress value is used for $P_m$ and $P_m + P_b$.

**Table 2.101. Summary of Stresses for Load Combinations Accident Conditions of Transport, Stress Point 22 (0.76 in. Wall Toroid)**

| Load Combination | Combination Index | Stress Intensity (psi) | |
|---|---|---|---|
| | | $P_m$ | $P_m + P_b$ |
| Free Drop 30 Foot - Top | 7a | 7.72E+03 | 7.72E+03 |
| Free Drop 30 Foot - Top | 7b | 7.72E+03 | 7.72E+03 |
| Free Drop 30 Foot - Top | 7c | 7.72E+03 | 7.72E+03 |
| Free Drop 30 Foot - Bottom | 7a | 1.29E+03 | 1.29E+03 |
| Free Drop 30 Foot - Bottom | 7b | 1.29E+03 | 1.29E+03 |
| Free Drop 30 Foot - Bottom | 7c | 1.29E+03 | 1.29E+03 |
| Free Drop 30 Foot - Side | 7a | 5.27E+02 | 5.27E+02 |
| Free Drop 30 Foot - Side | 7b | 5.27E+02 | 5.27E+02 |
| Free Drop 30 Foot - Side | 7c | 5.27E+02 | 5.27E+02 |
| Free Drop 30 Foot - CG | 7a | 5.67E+02 | 5.67E+02 |
| Free Drop 30 Foot - CG | 7b | 5.67E+02 | 5.67E+02 |
| Free Drop 30 Foot - CG | 7c | 5.67E+02 | 5.67E+02 |
| Puncture | 8a | 5.27E+02 | 5.27E+02 |
| Puncture | 8b | 5.27E+02 | 5.27E+02 |
| Puncture | 8c | 5.27E+02 | 5.27E+02 |
| Thermal Fire - t = 0.5 Hr | 9 | 1.90E+02 | 1.90E+02 |
| Thermal Fire - t = 1.0 Hr | 9 | 1.90E+02 | 1.90E+02 |
| Thermal Fire - t = 1.5 Hr | 9 | 1.90E+02 | 1.90E+02 |
| Thermal Fire - t = 2.0 Hr | 9 | 1.90E+02 | 1.90E+02 |
| Thermal Fire - t = 2.5 Hr | 9 | 1.90E+02 | 1.90E+02 |
| Thermal Fire - t = 3.0 Hr | 9 | 1.90E+02 | 1.90E+02 |
| Maximum Stress Intensity | | 7.72E+03 | 7.72E+03 |

NOTES:

1. Refer to Reference [2.2], corresponding Table 2.10.9.111A.
2. $P_m < 2.4 \cdot S_m$ or $0.7 \cdot S_u = 44.8$ ksi
   $P_m + P_b < 3.6 \cdot S_m$ or $1.0 \cdot S_u = 64.4$ ksi
3. See Table 2.32 for combination index identification.
4. Stresses are given at the centroid of the element, therefore, the same stress value is used for $P_m$ and $P_m + P_b$.

**Table 2.102. Summary of Stresses for Load Combinations Accident Conditions of Transport, Stress Point 23 (0.76 in. Wall Toroid)**

| Load Combination | Combination Index | Stress Intensity (psi) | |
|---|---|---|---|
| | | $P_m$ | $P_m + P_b$ |
| Free Drop 30 Foot - Top | 7a | 6.26E+03 | 6.26E+03 |
| Free Drop 30 Foot - Top | 7b | 6.26E+03 | 6.26E+03 |
| Free Drop 30 Foot - Top | 7c | 6.26E+03 | 6.26E+03 |
| Free Drop 30 Foot - Bottom | 7a | 9.06E+02 | 9.06E+02 |
| Free Drop 30 Foot - Bottom | 7b | 9.06E+02 | 9.06E+02 |
| Free Drop 30 Foot - Bottom | 7c | 9.06E+02 | 9.06E+02 |
| Free Drop 30 Foot - Side | 7a | 1.58E+02 | 1.58E+02 |
| Free Drop 30 Foot - Side | 7b | 1.58E+02 | 1.58E+02 |
| Free Drop 30 Foot - Side | 7c | 1.58E+02 | 1.58E+02 |
| Free Drop 30 Foot - CG | 7a | 4.79E+02 | 4.79E+02 |
| Free Drop 30 Foot - CG | 7b | 4.79E+02 | 4.79E+02 |
| Free Drop 30 Foot - CG | 7c | 4.79E+02 | 4.79E+02 |
| Puncture | 8a | 1.58E+02 | 1.58E+02 |
| Puncture | 8b | 1.58E+02 | 1.58E+02 |
| Puncture | 8c | 1.58E+02 | 1.58E+02 |
| Thermal Fire - t = 0.5 Hr | 9 | 8.36E+00 | 8.36E+00 |
| Thermal Fire - t = 1.0 Hr | 9 | 8.36E+00 | 8.36E+00 |
| Thermal Fire - t = 1.5 Hr | 9 | 8.36E+00 | 8.36E+00 |
| Thermal Fire - t = 2.0 Hr | 9 | 8.36E+00 | 8.36E+00 |
| Thermal Fire - t = 2.5 Hr | 9 | 8.36E+00 | 8.36E+00 |
| Thermal Fire - t = 3.0 Hr | 9 | 8.36E+00 | 8.36E+00 |
| Maximum Stress Intensity | | 6.26E+03 | 6.26E+03 |

NOTES:

1. Refer to Reference [2.2], corresponding Table 2.10.9.112A.
2. $P_m < 2.4 \cdot S_m$ or $0.7 \cdot S_u = 44.8$ ksi
   $P_m + P_b < 3.6 \cdot S_m$ or $1.0 \cdot S_u = 64.4$ ksi
3. See Table 2.32 for combination index identification.
4. Stresses are given at the centroid of the element, therefore, the same stress value is used for $P_m$ and $P_m + P_b$.

**Table 2.103. Summary of Stresses for Load Combinations Accident Conditions of Transport, Stress Point 24 (0.76 in. Wall Toroid)**

| Load Combination | Combination Index | Stress Intensity (psi) | |
|---|---|---|---|
| | | $P_m$ | $P_m + P_b$ |
| Free Drop 30 Foot - Top | 7a | 1.18E+04 | 1.18E+04 |
| Free Drop 30 Foot - Top | 7b | 1.18E+04 | 1.18E+04 |
| Free Drop 30 Foot - Top | 7c | 1.18E+04 | 1.18E+04 |
| Free Drop 30 Foot - Bottom | 7a | 2.34E+03 | 2.34E+03 |
| Free Drop 30 Foot - Bottom | 7b | 2.34E+03 | 2.34E+03 |
| Free Drop 30 Foot - Bottom | 7c | 2.34E+03 | 2.34E+03 |
| Free Drop 30 Foot - Side | 7a | 3.21E+03 | 3.21E+03 |
| Free Drop 30 Foot - Side | 7b | 3.21E+03 | 3.21E+03 |
| Free Drop 30 Foot - Side | 7c | 3.21E+03 | 3.21E+03 |
| Free Drop 30 Foot - CG | 7a | 5.45E+03 | 5.45E+03 |
| Free Drop 30 Foot - CG | 7b | 5.45E+03 | 5.45E+03 |
| Free Drop 30 Foot - CG | 7c | 5.45E+03 | 5.45E+03 |
| Puncture | 8a | 3.21E+03 | 3.21E+03 |
| Puncture | 8b | 3.21E+03 | 3.21E+03 |
| Puncture | 8c | 3.21E+03 | 3.21E+03 |
| Thermal Fire - t = 0.5 Hr | 9 | 8.57E+01 | 8.57E+01 |
| Thermal Fire - t = 1.0 Hr | 9 | 8.57E+01 | 8.57E+01 |
| Thermal Fire - t = 1.5 Hr | 9 | 8.57E+01 | 8.57E+01 |
| Thermal Fire - t = 2.0 Hr | 9 | 8.57E+01 | 8.57E+01 |
| Thermal Fire - t = 2.5 Hr | 9 | 8.57E+01 | 8.57E+01 |
| Thermal Fire - t = 3.0 Hr | 9 | 8.57E+01 | 8.57E+01 |
| Maximum Stress Intensity | | 1.18E+04 | 1.18E+04 |

NOTES:

1. Refer to Reference [2.2], corresponding Table 2.10.9.113A.
2. $P_m < 2.4 \cdot S_m$ or $0.7 \cdot S_u = 44.8$ ksi
   $P_m + P_b < 3.6 \cdot S_m$ or $1.0 \cdot S_u = 64.4$ ksi
3. See Table 2.32 for combination index identification.
4. Stresses are given at the centroid of the element, therefore, the same stress value is used for $P_m$ and $P_m + P_b$.

**Table 2.104. Summary of Stresses for Load Combinations Accident Conditions of Transport, Stress Point 25 (0.76 in. Wall Toroid)**

| Load Combination | Combination Index | Stress Intensity (psi) | |
|---|---|---|---|
| | | $P_m$ | $P_m + P_b$ |
| Free Drop 30 Foot - Top | 7a | 1.35E+04 | 1.35E+04 |
| Free Drop 30 Foot - Top | 7b | 1.35E+04 | 1.35E+04 |
| Free Drop 30 Foot - Top | 7c | 1.35E+04 | 1.35E+04 |
| Free Drop 30 Foot - Bottom | 7a | 2.59E+03 | 2.59E+03 |
| Free Drop 30 Foot - Bottom | 7b | 2.59E+03 | 2.59E+03 |
| Free Drop 30 Foot - Bottom | 7c | 2.59E+03 | 2.59E+03 |
| Free Drop 30 Foot - Side | 7a | 1.80E+04 | 1.80E+04 |
| Free Drop 30 Foot - Side | 7b | 1.80E+04 | 1.80E+04 |
| Free Drop 30 Foot - Side | 7c | 1.80E+04 | 1.80E+04 |
| Free Drop 30 Foot - CG | 7a | 8.43E+03 | 8.43E+03 |
| Free Drop 30 Foot - CG | 7b | 8.43E+03 | 8.43E+03 |
| Free Drop 30 Foot - CG | 7c | 8.43E+03 | 8.43E+03 |
| Puncture | 8a | 1.80E+04 | 1.80E+04 |
| Puncture | 8b | 1.80E+04 | 1.80E+04 |
| Puncture | 8c | 1.80E+04 | 1.80E+04 |
| Thermal Fire - t = 0.5 Hr | 9 | 5.73E+01 | 5.73E+01 |
| Thermal Fire - t = 1.0 Hr | 9 | 5.73E+01 | 5.73E+01 |
| Thermal Fire - t = 1.5 Hr | 9 | 5.73E+01 | 5.73E+01 |
| Thermal Fire - t = 2.0 Hr | 9 | 5.73E+01 | 5.73E+01 |
| Thermal Fire - t = 2.5 Hr | 9 | 5.73E+01 | 5.73E+01 |
| Thermal Fire - t = 3.0 Hr | 9 | 5.73E+01 | 5.73E+01 |
| Maximum Stress Intensity | | 1.80E+04 | 1.80E+04 |

NOTES:

1. Refer to Reference [2.2], corresponding Table 2.10.9.114A.
2. $P_m < 2.4 \cdot S_m$ or $0.7 \cdot S_u = 44.8$ ksi
   $P_m + P_b < 3.6 \cdot S_m$ or $1.0 \cdot S_u = 64.4$ ksi
3. See Table 2.32 for combination index identification.
4. Stresses are given at the centroid of the element, therefore, the same stress value is used for $P_m$ and $P_m + P_b$.

**Table 2.105. Summary of Stresses for Load Combinations Accident Conditions of Transport, Stress Point 26 (0.76 in. Wall Toroid)**

| Load Combination | Combination Index | Stress Intensity (psi) | |
|---|---|---|---|
| | | $P_m$ | $P_m + P_b$ |
| Free Drop 30 Foot - Top | 7a | 8.14E+03 | 8.14E+03 |
| Free Drop 30 Foot - Top | 7b | 8.14E+03 | 8.14E+03 |
| Free Drop 30 Foot - Top | 7c | 8.14E+03 | 8.14E+03 |
| Free Drop 30 Foot - Bottom | 7a | 8.64E+02 | 8.64E+02 |
| Free Drop 30 Foot - Bottom | 7b | 8.64E+02 | 8.64E+02 |
| Free Drop 30 Foot - Bottom | 7c | 8.64E+02 | 8.64E+02 |
| Free Drop 30 Foot - Side | 7a | 7.64E+03 | 7.64E+03 |
| Free Drop 30 Foot - Side | 7b | 7.64E+03 | 7.64E+03 |
| Free Drop 30 Foot - Side | 7c | 7.64E+03 | 7.64E+03 |
| Free Drop 30 Foot - CG | 7a | 1.75E+03 | 1.75E+03 |
| Free Drop 30 Foot - CG | 7b | 1.75E+03 | 1.75E+03 |
| Free Drop 30 Foot - CG | 7c | 1.75E+03 | 1.75E+03 |
| Puncture | 8a | 7.64E+03 | 7.64E+03 |
| Puncture | 8b | 7.64E+03 | 7.64E+03 |
| Puncture | 8c | 7.64E+03 | 7.64E+03 |
| Thermal Fire - t = 0.5 Hr | 9 | 3.85E+01 | 3.85E+01 |
| Thermal Fire - t = 1.0 Hr | 9 | 3.85E+01 | 3.85E+01 |
| Thermal Fire - t = 1.5 Hr | 9 | 3.85E+01 | 3.85E+01 |
| Thermal Fire - t = 2.0 Hr | 9 | 3.85E+01 | 3.85E+01 |
| Thermal Fire - t = 2.5 Hr | 9 | 3.85E+01 | 3.85E+01 |
| Thermal Fire - t = 3.0 Hr | 9 | 3.85E+01 | 3.85E+01 |
| Maximum Stress Intensity | | 8.14E+03 | 8.14E+03 |

NOTES:

1. Refer to Reference [2.2], corresponding Table 2.10.9.115A.
2. $P_m < 2.4 \cdot S_m$ or $0.7 \cdot S_u = 44.8$ ksi
   $P_m + P_b < 3.6 \cdot S_m$ or $1.0 \cdot S_u = 64.4$ ksi
3. See Table 2.32 for combination index identification.
4. Stresses are given at the centroid of the element, therefore, the same stress value is used for $P_m$ and $P_m + P_b$.

**Table 2.106. Summary of Stresses for Load Combinations Accident Conditions of Transport, Stress Point 27 (0.76 in. Wall Toroid)**

| Load Combination | Combination Index | Stress Intensity (psi) | |
|---|---|---|---|
| | | $P_m$ | $P_m + P_b$ |
| Free Drop 30 Foot - Top | 7a | 7.10E+03 | 7.10E+03 |
| Free Drop 30 Foot - Top | 7b | 7.10E+03 | 7.10E+03 |
| Free Drop 30 Foot - Top | 7c | 7.10E+03 | 7.10E+03 |
| Free Drop 30 Foot - Bottom | 7a | 6.24E+02 | 6.24E+02 |
| Free Drop 30 Foot - Bottom | 7b | 6.24E+02 | 6.24E+02 |
| Free Drop 30 Foot - Bottom | 7c | 6.24E+02 | 6.24E+02 |
| Free Drop 30 Foot - Side | 7a | 7.94E+03 | 7.94E+03 |
| Free Drop 30 Foot - Side | 7b | 7.94E+03 | 7.94E+03 |
| Free Drop 30 Foot - Side | 7c | 7.94E+03 | 7.94E+03 |
| Free Drop 30 Foot - CG | 7a | 1.52E+03 | 1.52E+03 |
| Free Drop 30 Foot - CG | 7b | 1.52E+03 | 1.52E+03 |
| Free Drop 30 Foot - CG | 7c | 1.52E+03 | 1.52E+03 |
| Puncture | 8a | 7.94E+03 | 7.94E+03 |
| Puncture | 8b | 7.94E+03 | 7.94E+03 |
| Puncture | 8c | 7.94E+03 | 7.94E+03 |
| Thermal Fire - t = 0.5 Hr | 9 | 6.98E+01 | 6.98E+01 |
| Thermal Fire - t = 1.0 Hr | 9 | 6.98E+01 | 6.98E+01 |
| Thermal Fire - t = 1.5 Hr | 9 | 6.98E+01 | 6.98E+01 |
| Thermal Fire - t = 2.0 Hr | 9 | 6.98E+01 | 6.98E+01 |
| Thermal Fire - t = 2.5 Hr | 9 | 6.98E+01 | 6.98E+01 |
| Thermal Fire - t = 3.0 Hr | 9 | 6.98E+01 | 6.98E+01 |
| Maximum Stress Intensity | | 7.94E+03 | 7.94E+03 |

NOTES:

1. Refer to Reference [2.2], corresponding Table 2.10.9.116A.
2. $P_m < 2.4 \cdot S_m$ or $0.7 \cdot S_u = 44.8$ ksi
   $P_m + P_b < 3.6 \cdot S_m$ or $1.0 \cdot S_u = 64.4$ ksi
3. See Table 2.32 for combination index identification.
4. Stresses are given at the centroid of the element, therefore, the same stress value is used for $P_m$ and $P_m + P_b$.

**Table 2.107. Summary of Stresses for Load Combinations Normal Conditions of Transport, Stress Point 1 (0.50 in. Wall Toroid)**

| Load Combination | Comb Index | Stress Intensity (psi) | | | | Fatigue Salt |
|---|---|---|---|---|---|---|
| | | Q | $P_m$ | $P_m + P_b$ | $P_m + P_b + Q$ | |
| Hot Environment | 1 | 1.11E+03 | 1.30E+01 | 1.30E+01 | 1.12E+03 | |
| Cold Environment | 2a | 1.31E+03 | 1.30E+01 | 1.30E+01 | 1.32E+03 | |
| Cold Environment | 2b | 1.01E+02 | 1.30E+01 | 1.30E+01 | 1.14E+02 | |
| Minimum Ext. Press. | 3a | 1.11E+03 | 2.55E+01 | 2.55E+01 | 1.14E+03 | |
| Minimum Ext. Press. | 3b | 1.29E+03 | 2.55E+01 | 2.55E+01 | 1.32E+03 | |
| Increased Ext. Press. | 4a | 1.11E+03 | 5.25E+00 | 5.25E+00 | 1.12E+03 | |
| Increased Ext. Press. | 4b | 1.29E+03 | 5.25E+00 | 5.25E+00 | 1.30E+03 | |
| Vibration and Shock | 5a | 1.11E+03 | 4.03E+01 | 4.03E+01 | 1.15E+03 | 5.76E+02 |
| Vibration and Shock | 5b | 1.29E+03 | 4.03E+01 | 4.03E+01 | 1.33E+03 | 6.67E+02 |
| Vibration and Shock | 5c | 8.37E+01 | 4.03E+01 | 4.03E+01 | 1.24E+02 | 6.20E+01 |
| Free Drop - Top | 6a | 1.11E+03 | 1.42E+01 | 1.42E+01 | 1.13E+03 | |
| Free Drop - Top | 6b | 1.29E+03 | 1.42E+01 | 1.42E+01 | 1.31E+03 | |
| Free Drop - Top | 6c | 8.37E+01 | 1.42E+01 | 1.42E+01 | 9.79E+01 | |
| Free Drop - Side, 0 MER | 6a | 1.11E+03 | 9.49E+01 | 9.49E+01 | 1.21E+03 | |
| Free Drop - Side, 0 MER | 6b | 1.29E+03 | 9.49E+01 | 9.49E+01 | 1.39E+03 | |
| Free Drop - Side, 0 MER | 6c | 8.37E+01 | 9.49E+01 | 9.49E+01 | 1.79E+02 | |
| Free Drop - Side, 45 MER | 6a | 1.11E+03 | 7.86E+01 | 7.86E+01 | 1.19E+03 | |
| Free Drop - Side, 45 MER | 6b | 1.29E+03 | 7.86E+01 | 7.86E+01 | 1.37E+03 | |
| Free Drop - Side, 45 MER | 6c | 8.37E+01 | 7.86E+01 | 7.86E+01 | 1.62E+02 | |
| Maximum Stress Intensity | | 1.31E+03 | 9.49E+01 | 9.49E+01 | 1.39E+03 | |

NOTES:

1. Refer to Reference [2.2], corresponding Table 2.10.9.43.
2. $P_m < S_m = 18.7$ ksi
   $P_m + P_b < 1.5 \cdot S_m = 28.1$ ksi
   $P_m + P_b + Q < 3.0 \cdot S_m = 56.1$ ksi
3. See Table 2.32 for combination index identification.
4. For combinations with Salt not listed, the number of load cycles are few and therefore, the fatigue qualifications are met.
5. MER = Meridian, angle of orientation from the contact edge where stresses are given.
6. Stresses are given at the centroid of the element, therefore, the same stress value is used for $P_m$ and $P_m + P_b$.

**Table 2.108. Summary of Stresses for Load Combinations Normal Conditions of Transport, Stress Point 2 (0.50 in. Wall Toroid)**

| Load Combination | Comb Index | Stress Intensity (psi) | | | | Fatigue Salt |
|---|---|---|---|---|---|---|
| | | Q | $P_m$ | $P_m + P_b$ | $P_m + P_b + Q$ | |
| Hot Environment | 1 | 8.45E+02 | 1.37E+01 | 1.37E+01 | 8.59E+02 | |
| Cold Environment | 2a | 6.62E+02 | 1.37E+01 | 1.37E+01 | 6.76E+02 | |
| Cold Environment | 2b | 8.38E+01 | 1.37E+01 | 1.37E+01 | 9.75E+01 | |
| Minimum Ext. Press. | 3a | 8.45E+02 | 2.88E+01 | 2.88E+01 | 8.74E+02 | |
| Minimum Ext. Press. | 3b | 6.73E+02 | 2.88E+01 | 2.88E+01 | 7.02E+02 | |
| Increased Ext. Press. | 4a | 8.45E+02 | 3.93E+00 | 3.93E+00 | 8.49E+02 | |
| Increased Ext. Press. | 4b | 6.73E+02 | 3.93E+00 | 3.93E+00 | 6.77E+02 | |
| Vibration and Shock | 5a | 8.45E+02 | 5.11E+01 | 5.11E+01 | 8.96E+02 | 4.48E+02 |
| Vibration and Shock | 5b | 6.73E+02 | 5.11E+01 | 5.11E+01 | 7.24E+02 | 3.62E+02 |
| Vibration and Shock | 5c | 7.16E+01 | 5.11E+01 | 5.11E+01 | 1.23E+02 | 6.14E+01 |
| Free Drop - Top | 6a | 8.45E+02 | 1.51E+01 | 1.51E+01 | 8.60E+02 | |
| Free Drop - Top | 6b | 6.73E+02 | 1.51E+01 | 1.51E+01 | 6.88E+02 | |
| Free Drop - Top | 6c | 7.16E+01 | 1.51E+01 | 1.51E+01 | 8.67E+01 | |
| Free Drop - Side, 0 MER | 6a | 8.45E+02 | 1.18E+02 | 1.18E+02 | 9.63E+02 | |
| Free Drop - Side, 0 MER | 6b | 6.73E+02 | 1.18E+02 | 1.18E+02 | 7.91E+02 | |
| Free Drop - Side, 0 MER | 6c | 7.16E+01 | 1.18E+02 | 1.18E+02 | 1.90E+02 | |
| Free Drop - Side, 45 MER | 6a | 8.45E+02 | 1.10E+02 | 1.10E+02 | 9.55E+02 | |
| Free Drop - Side, 45 MER | 6b | 6.73E+02 | 1.10E+02 | 1.10E+02 | 7.83E+02 | |
| Free Drop - Side, 45 MER | 6c | 7.16E+01 | 1.10E+02 | 1.10E+02 | 1.82E+02 | |
| Maximum Stress Intensity | | 8.45E+02 | 1.18E+02 | 1.18E+02 | 9.63E+02 | |

NOTES:

1. Refer to Reference [2.2], corresponding Table 2.10.9.44.
2. $P_m < S_m = 18.7$ ksi
   $P_m + P_b < 1.5 \cdot S_m = 28.1$ ksi
   $P_m + P_b + Q < 3.0 \cdot S_m = 56.1$ ksi
3. See Table 2.32 for combination index identification.
4. For combinations with Salt not listed, the number of load cycles are few and therefore, the fatigue qualifications are met.
5. MER = Meridian, angle of orientation from the contact edge where stresses are given.
6. Stresses are given at the centroid of the element, therefore, the same stress value is used for $P_m$ and $P_m + P_b$.

**Table 2.109. Summary of Stresses for Load Combinations Normal Conditions of Transport, Stress Point 3 (0.50 in. Wall Toroid)**

| Load Combination | Comb Index | Stress Intensity (psi) | | | | Fatigue Salt |
|---|---|---|---|---|---|---|
| | | Q | $P_m$ | $P_m + P_b$ | $P_m + P_b + Q$ | |
| Hot Environment | 1 | 8.97E+02 | 1.51E+01 | 1.51E+01 | 9.12E+02 | |
| Cold Environment | 2a | 1.15E+03 | 1.51E+01 | 1.51E+01 | 1.16E+03 | |
| Cold Environment | 2b | 1.90E+02 | 1.51E+01 | 1.51E+01 | 2.05E+02 | |
| Minimum Ext. Press. | 3a | 8.97E+02 | 2.69E+01 | 2.69E+01 | 9.23E+02 | |
| Minimum Ext. Press. | 3b | 1.12E+03 | 2.69E+01 | 2.69E+01 | 1.15E+03 | |
| Increased Ext. Press. | 4a | 8.97E+02 | 6.72E+00 | 6.72E+00 | 9.03E+02 | |
| Increased Ext. Press. | 4b | 1.12E+03 | 6.72E+00 | 6.72E+00 | 1.13E+03 | |
| Vibration and Shock | 5a | 8.97E+02 | 8.44E+02 | 8.44E+02 | 1.74E+03 | 8.70E+02 |
| Vibration and Shock | 5b | 1.12E+03 | 8.44E+02 | 8.44E+02 | 1.96E+03 | 9.82E+02 |
| Vibration and Shock | 5c | 1.50E+02 | 8.44E+02 | 8.44E+02 | 9.94E+02 | 4.97E+02 |
| Free Drop - Top | 6a | 8.97E+02 | 7.12E+02 | 7.12E+02 | 1.61E+03 | |
| Free Drop - Top | 6b | 1.12E+03 | 7.12E+02 | 7.12E+02 | 1.83E+03 | |
| Free Drop - Top | 6c | 1.50E+02 | 7.12E+02 | 7.12E+02 | 8.62E+02 | |
| Free Drop - Side, 0 MER | 6a | 8.97E+02 | 2.93E+03 | 2.93E+03 | 3.83E+03 | |
| Free Drop - Side, 0 MER | 6b | 1.12E+03 | 2.93E+03 | 2.93E+03 | 4.05E+03 | |
| Free Drop - Side, 0 MER | 6c | 1.50E+02 | 2.93E+03 | 2.93E+03 | 3.08E+03 | |
| Free Drop - Side, 45 MER | 6a | 8.97E+02 | 1.25E+03 | 1.25E+03 | 2.15E+03 | |
| Free Drop - Side, 45 MER | 6b | 1.12E+03 | 1.25E+03 | 1.25E+03 | 2.37E+03 | |
| Free Drop - Side, 45 MER | 6c | 1.50E+02 | 1.25E+03 | 1.25E+03 | 1.40E+03 | |
| Maximum Stress Intensity | | 1.15E+03 | 2.93E+03 | 2.93E+03 | 4.05E+03 | |

NOTES:

1. Refer to Reference [2.2], corresponding Table 2.10.9.45.
2. $P_m < S_m = 18.7$ ksi
   $P_m + P_b < 1.5 \cdot S_m = 28.1$ ksi
   $P_m + P_b + Q < 3.0 \cdot S_m = 56.1$ ksi
3. See Table 2.32 for combination index identification.
4. For combinations with Salt not listed, the number of load cycles are few and therefore, the fatigue qualifications are met.
5. MER = Meridian, angle of orientation from the contact edge where stresses are given.
6. Stresses are given at the centroid of the element, therefore, the same stress value is used for $P_m$ and $P_m + P_b$.

**Table 2.110. Summary of Stresses for Load Combinations Normal Conditions of Transport, Stress Point 4 (0.50 in. Wall Toroid)**

| Load Combination | Comb Index | Stress Intensity (psi) | | | | Fatigue Salt |
|---|---|---|---|---|---|---|
| | | Q | $P_m$ | $P_m + P_b$ | $P_m + P_b + Q$ | |
| Hot Environment | 1 | 8.52E+02 | 1.76E+01 | 1.76E+01 | 8.70E+02 | |
| Cold Environment | 2a | 7.46E+02 | 1.76E+01 | 1.76E+01 | 7.63E+02 | |
| Cold Environment | 2b | 9.05E+01 | 1.76E+01 | 1.76E+01 | 1.08E+02 | |
| Minimum Ext. Press. | 3a | 8.52E+02 | 3.09E+01 | 3.09E+01 | 8.83E+02 | |
| Minimum Ext. Press. | 3b | 7.37E+02 | 3.09E+01 | 3.09E+01 | 7.68E+02 | |
| Increased Ext. Press. | 4a | 8.52E+02 | 8.32E+00 | 8.32E+00 | 8.61E+02 | |
| Increased Ext. Press. | 4b | 7.37E+02 | 8.32E+00 | 8.32E+00 | 7.45E+02 | |
| Vibration and Shock | 5a | 8.52E+02 | 4.51E+02 | 4.51E+02 | 1.30E+03 | 6.52E+02 |
| Vibration and Shock | 5b | 7.37E+02 | 4.51E+02 | 4.51E+02 | 1.19E+03 | 5.94E+02 |
| Vibration and Shock | 5c | 5.96E+01 | 4.51E+02 | 4.51E+02 | 5.11E+02 | 2.55E+02 |
| Free Drop - Top | 6a | 8.52E+02 | 7.07E+02 | 7.07E+02 | 1.56E+03 | |
| Free Drop - Top | 6b | 7.37E+02 | 7.07E+02 | 7.07E+02 | 1.44E+03 | |
| Free Drop - Top | 6c | 5.96E+01 | 7.07E+02 | 7.07E+02 | 7.67E+02 | |
| Free Drop - Side, 0 MER | 6a | 8.52E+02 | 7.26E+02 | 7.26E+02 | 1.58E+03 | |
| Free Drop - Side, 0 MER | 6b | 7.37E+02 | 7.26E+02 | 7.26E+02 | 1.46E+03 | |
| Free Drop - Side, 0 MER | 6c | 5.96E+01 | 7.26E+02 | 7.26E+02 | 7.86E+02 | |
| Free Drop - Side, 45 MER | 6a | 8.52E+02 | 5.36E+02 | 5.36E+02 | 1.39E+03 | |
| Free Drop - Side, 45 MER | 6b | 7.37E+02 | 5.36E+02 | 5.36E+02 | 1.27E+03 | |
| Free Drop - Side, 45 MER | 6c | 5.96E+01 | 5.36E+02 | 5.36E+02 | 5.96E+02 | |
| Maximum Stress Intensity | | 8.52E+02 | 7.26E+02 | 7.26E+02 | 1.58E+03 | |

NOTES:

1. Refer to Reference [2.2], corresponding Table 2.10.9.46.
2. $P_m < S_m = 18.7$ ksi
   $P_m + P_b < 1.5 \cdot S_m = 28.1$ ksi
   $P_m + P_b + Q < 3.0 \cdot S_m = 56.1$ ksi
3. See Table 2.32 for combination index identification.
4. For combinations with Salt not listed, the number of load cycles are few and therefore, the fatigue qualifications are met.
5. MER = Meridian, angle of orientation from the contact edge where stresses are given.
6. Stresses are given at the centroid of the element, therefore, the same stress value is used for $P_m$ and $P_m + P_b$.

**Table 2.111. Summary of Stresses for Load Combinations Normal Conditions of Transport, Stress Point 5 (0.50 in. Wall Toroid)**

| Load Combination | Comb Index | Stress Intensity (psi) | | | | Fatigue Salt |
|---|---|---|---|---|---|---|
| | | Q | $P_m$ | $P_m + P_b$ | $P_m + P_b + Q$ | |
| Hot Environment | 1 | 2.12E+03 | 3.07E+00 | 3.07E+00 | 2.13E+03 | |
| Cold Environment | 2a | 2.24E+03 | 3.07E+00 | 3.07E+00 | 2.24E+03 | |
| Cold Environment | 2b | 3.19E+01 | 3.07E+00 | 3.07E+00 | 3.49E+01 | |
| Minimum Ext. Press. | 3a | 2.12E+03 | 1.13E+01 | 1.13E+01 | 2.14E+03 | |
| Minimum Ext. Press. | 3b | 2.21E+03 | 1.13E+01 | 1.13E+01 | 2.23E+03 | |
| Increased Ext. Press. | 4a | 2.12E+03 | 6.41E+00 | 6.41E+00 | 2.13E+03 | |
| Increased Ext. Press. | 4b | 2.21E+03 | 6.41E+00 | 6.41E+00 | 2.22E+03 | |
| Vibration and Shock | 5a | 2.12E+03 | 3.07E+02 | 3.07E+02 | 2.43E+03 | 1.22E+03 |
| Vibration and Shock | 5b | 2.21E+03 | 3.07E+02 | 3.07E+02 | 2.52E+03 | 1.26E+03 |
| Vibration and Shock | 5c | 2.74E+01 | 3.07E+02 | 3.07E+02 | 3.34E+02 | 1.67E+02 |
| Free Drop - Top | 6a | 2.12E+03 | 4.24E+02 | 4.24E+02 | 2.55E+03 | |
| Free Drop - Top | 6b | 2.21E+03 | 4.24E+02 | 4.24E+02 | 2.64E+03 | |
| Free Drop - Top | 6c | 2.74E+01 | 4.24E+02 | 4.24E+02 | 4.51E+02 | |
| Free Drop - Side, 0 MER | 6a | 2.12E+03 | 3.15E+02 | 3.15E+02 | 2.44E+03 | |
| Free Drop - Side, 0 MER | 6b | 2.21E+03 | 3.15E+02 | 3.15E+02 | 2.53E+03 | |
| Free Drop - Side, 0 MER | 6c | 2.74E+01 | 3.15E+02 | 3.15E+02 | 3.42E+02 | |
| Free Drop - Side, 45 MER | 6a | 2.12E+03 | 4.48E+01 | 4.48E+01 | 2.17E+03 | |
| Free Drop - Side, 45 MER | 6b | 2.21E+03 | 4.48E+01 | 4.48E+01 | 2.26E+03 | |
| Free Drop - Side, 45 MER | 6c | 2.74E+01 | 4.48E+01 | 4.48E+01 | 7.22E+01 | |
| Maximum Stress Intensity | | 2.24E+03 | 4.24E+03 | 4.24E+03 | 2.64E+03 | |

NOTES:

1. Refer to Reference [2.2], corresponding Table 2.10.9.47.
2. $P_m < S_m = 18.7$ ksi
   $P_m + P_b < 1.5 \cdot S_m = 28.1$ ksi
   $P_m + P_b + Q < 3.0 \cdot S_m = 56.1$ ksi
3. See Table 2.32 for combination index identification.
4. For combinations with Salt not listed, the number of load cycles are few and therefore, the fatigue qualifications are met.
5. MER = Meridian, angle of orientation from the contact edge where stresses are given.
6. Stresses are given at the centroid of the element, therefore, the same stress value is used for $P_m$ and $P_m + P_b$.

**Table 2.112. Summary of Stresses for Load Combinations Normal Conditions of Transport, Stress Point 6 (0.50 in. Wall Toroid)**

| Load Combination | Comb Index | Stress Intensity (psi) | | | | Fatigue Salt |
|---|---|---|---|---|---|---|
| | | Q | $P_m$ | $P_m + P_b$ | $P_m + P_b + Q$ | |
| Hot Environment | 1 | 1.89E+03 | 7.86E+00 | 7.86E+00 | 1.90E+03 | |
| Cold Environment | 2a | 2.06E+03 | 7.86E+00 | 7.86E+00 | 2.07E+03 | |
| Cold Environment | 2b | 7.71E+01 | 7.86E+00 | 7.86E+00 | 8.49E+01 | |
| Minimum Ext. Press. | 3a | 1.89E+03 | 1.24E+01 | 1.24E+01 | 1.90E+03 | |
| Minimum Ext. Press. | 3b | 2.03E+03 | 1.24E+01 | 1.24E+01 | 2.04E+03 | |
| Increased Ext. Press. | 4a | 1.89E+03 | 9.27E+00 | 9.27E+00 | 1.90E+03 | |
| Increased Ext. Press. | 4b | 2.03E+03 | 9.27E+00 | 9.27E+00 | 2.04E+03 | |
| Vibration and Shock | 5a | 1.89E+03 | 3.43E+02 | 3.43E+02 | 2.24E+03 | 1.12E+03 |
| Vibration and Shock | 5b | 2.03E+03 | 3.43E+02 | 3.43E+02 | 2.37E+03 | 1.19E+03 |
| Vibration and Shock | 5c | 2.91E+01 | 3.43E+02 | 3.43E+02 | 3.72E+02 | 1.86E+02 |
| Free Drop - Top | 6a | 1.89E+03 | 5.12E+02 | 5.12E+02 | 2.40E+03 | |
| Free Drop - Top | 6b | 2.03E+03 | 5.12E+02 | 5.12E+02 | 2.54E+03 | |
| Free Drop - Top | 6c | 2.91E+01 | 5.12E+02 | 5.12E+02 | 5.41E+02 | |
| Free Drop - Side, 0 MER | 6a | 1.89E+03 | 4.82E+02 | 4.82E+02 | 2.37E+03 | |
| Free Drop - Side, 0 MER | 6b | 2.03E+03 | 4.82E+02 | 4.82E+02 | 2.51E+03 | |
| Free Drop - Side, 0 MER | 6c | 2.91E+01 | 4.82E+02 | 4.82E+02 | 5.11E+02 | |
| Free Drop - Side, 45 MER | 6a | 1.89E+03 | 1.92E+02 | 1.92E+02 | 2.08E+03 | |
| Free Drop - Side, 45 MER | 6b | 2.03E+03 | 1.92E+02 | 1.92E+02 | 2.22E+03 | |
| Free Drop - Side, 45 MER | 6c | 2.91E+01 | 1.92E+02 | 1.92E+02 | 2.21E+02 | |
| Maximum Stress Intensity | | 2.06E+03 | 5.12E+02 | 5.12E+02 | 2.54E+03 | |

NOTES:

1. Refer to Reference [2.2], corresponding Table 2.10.9.48.
2. $P_m < S_m = 18.7$ ksi
   $P_m + P_b < 1.5 \cdot S_m = 28.1$ ksi
   $P_m + P_b + Q < 3.0 \cdot S_m = 56.1$ ksi
3. See Table 2.32 for combination index identification.
4. For combinations with Salt not listed, the number of load cycles are few and therefore, the fatigue qualifications are met.
5. MER = Meridian, angle of orientation from the contact edge where stresses are given.
6. Stresses are given at the centroid of the element, therefore, the same stress value is used for $P_m$ and $P_m + P_b$.

**Table 2.113. Summary of Stresses for Load Combinations Normal Conditions of Transport, Stress Point 7a (0.50 in. Wall Toroid)**

| Load Combination | Comb Index | Stress Intensity (psi) | | | | Fatigue Salt |
|---|---|---|---|---|---|---|
| | | Q | $P_m$ | $P_m + P_b$ | $P_m + P_b + Q$ | |
| Hot Environment | 1 | 2.19E+04 | 6.22E+01 | 1.00E+02 | 2.20E+04 | |
| Cold Environment | 2a | 1.51E+04 | 6.22E+01 | 1.00E+02 | 1.52E+04 | |
| Cold Environment | 2b | 1.39E+04 | 6.22E+01 | 1.00E+02 | 1.40E+04 | |
| Minimum Ext. Press. | 3a | 2.19E+04 | 1.07E+02 | 1.89E+02 | 2.21E+04 | |
| Minimum Ext. Press. | 3b | 1.66E+04 | 1.07E+02 | 1.89E+02 | 1.68E+04 | |
| Increased Ext. Press. | 4a | 2.19E+04 | 4.18E+01 | 5.92E+01 | 2.19E+04 | |
| Increased Ext. Press. | 4b | 1.66E+04 | 4.18E+01 | 5.92E+01 | 1.66E+04 | |
| Vibration and Shock | 5a | 2.19E+04 | 7.47E+02 | 5.37E+02 | 2.24E+04 | 1.12E+04 |
| Vibration and Shock | 5b | 1.66E+04 | 7.47E+02 | 5.37E+02 | 1.71E+04 | 8.56E+03 |
| Vibration and Shock | 5c | 1.21E+04 | 7.47E+02 | 5.37E+02 | 1.26E+04 | 6.31E+03 |
| Free Drop - Top | 6a | 2.19E+04 | 6.87E+02 | 7.45E+02 | 2.26E+04 | |
| Free Drop - Top | 6b | 1.66E+04 | 6.87E+02 | 7.45E+02 | 1.73E+04 | |
| Free Drop - Top | 6c | 1.21E+04 | 6.87E+02 | 7.45E+02 | 1.28E+04 | |
| Free Drop - Side, 0 MER | 6a | 2.19E+04 | 2.02E+03 | 3.68E+02 | 2.22E+04 | |
| Free Drop - Side, 0 MER | 6b | 1.66E+04 | 2.02E+03 | 3.68E+02 | 1.70E+04 | |
| Free Drop - Side, 0 MER | 6c | 1.21E+04 | 2.02E+03 | 3.68E+02 | 1.25E+04 | |
| Free Drop - Side, 45 MER | 6a | 2.19E+04 | 3.06E+03 | 3.61E+03 | 2.55E+04 | |
| Free Drop - Side, 45 MER | 6b | 1.66E+04 | 3.06E+03 | 3.61E+03 | 2.02E+04 | |
| Free Drop - Side, 45 MER | 6c | 1.21E+04 | 3.06E+03 | 3.61E+03 | 1.57E+04 | |
| Maximum Stress Intensity | | 2.19E+04 | 3.06E+03 | 3.61E+03 | 2.55E+04 | |

NOTES:

1. Refer to Reference [2.2], corresponding Table 2.10.9.49.
2. $P_m < S_m = 18.7$ ksi
   $P_m + P_b < 1.5 \cdot S_m = 28.1$ ksi
   $P_m + P_b + Q < 3.0 \cdot S_m = 56.1$ ksi
3. See Table 2.32 for combination index identification.
4. For combinations with Salt not listed, the number of load cycles are few and therefore, the fatigue qualifications are met.
5. MER = Meridian, angle of orientation from the contact edge where stresses are given.

**Table 2.114. Summary of Stresses for Load Combinations Normal Conditions of Transport, Stress Point 7b (0.50 in. Wall Toroid)**

| Load Combination | Comb Index | Stress Intensity (psi) | | | | Fatigue Salt |
|---|---|---|---|---|---|---|
| | | Q | $P_m$ | $P_m + P_b$ | $P_m + P_b + Q$ | |
| Hot Environment | 1 | 1.43E+04 | 6.22E+01 | 3.93E+01 | 1.43E+04 | |
| Cold Environment | 2a | 1.10E+04 | 6.22E+01 | 3.93E+01 | 1.11E+04 | |
| Cold Environment | 2b | 6.54E+03 | 6.22E+01 | 3.93E+01 | 6.58E+03 | |
| Minimum Ext. Press. | 3a | 1.43E+04 | 1.07E+02 | 5.57E+01 | 1.43E+04 | |
| Minimum Ext. Press. | 3b | 1.13E+04 | 1.07E+02 | 5.57E+01 | 1.13E+04 | |
| Increased Ext. Press. | 4a | 1.43E+04 | 4.18E+01 | 3.04E+01 | 1.43E+04 | |
| Increased Ext. Press. | 4b | 1.13E+04 | 4.18E+01 | 3.04E+01 | 1.13E+04 | |
| Vibration and Shock | 5a | 1.43E+04 | 7.47E+02 | 1.33E+03 | 1.56E+04 | 7.79E+03 |
| Vibration and Shock | 5b | 1.13E+04 | 7.47E+02 | 1.33E+03 | 1.26E+04 | 6.31E+03 |
| Vibration and Shock | 5c | 6.19E+03 | 7.47E+02 | 1.33E+03 | 7.52E+03 | 3.76E+03 |
| Free Drop - Top | 6a | 1.43E+04 | 6.87E+02 | 7.90E+02 | 1.50E+04 | |
| Free Drop - Top | 6b | 1.13E+04 | 6.87E+02 | 7.90E+02 | 1.21E+04 | |
| Free Drop - Top | 6c | 6.19E+03 | 6.87E+02 | 7.90E+02 | 6.98E+03 | |
| Free Drop - Side, 0 MER | 6a | 1.43E+04 | 2.02E+03 | 4.82E+03 | 1.91E+04 | |
| Free Drop - Side, 0 MER | 6b | 1.13E+04 | 2.02E+03 | 4.82E+03 | 1.61E+04 | |
| Free Drop - Side, 0 MER | 6c | 6.19E+03 | 2.02E+03 | 4.82E+03 | 1.10E+04 | |
| Free Drop - Side, 45 MER | 6a | 1.43E+04 | 3.06E+03 | 2.68E+03 | 1.69E+04 | |
| Free Drop - Side, 45 MER | 6b | 1.13E+04 | 3.06E+03 | 2.68E+03 | 1.40E+04 | |
| Free Drop - Side, 45 MER | 6c | 6.19E+03 | 3.06E+03 | 2.68E+03 | 8.87E+03 | |
| Maximum Stress Intensity | | 1.43E+04 | 3.06E+03 | 4.82E+03 | 1.91E+04 | |

NOTES:

1. Refer to Reference [2.2], corresponding Table 2.10.9.50.
2. $P_m < S_m = 18.7$ ksi
   $P_m + P_b < 1.5 \cdot S_m = 28.1$ ksi
   $P_m + P_b + Q < 3.0 \cdot S_m = 56.1$ ksi
3. See Table 2.32 for combination index identification.
4. For combinations with Salt not listed, the number of load cycles are few and therefore, the fatigue qualifications are met.
5. MER = Meridian, angle of orientation from the contact edge where stresses are given.

**Table 2.115. Summary of Stresses for Load Combinations Normal Conditions of Transport, Stress Point 8a (0.50 in. Wall Toroid)**

| Load Combination | Comb Index | Stress Intensity (psi) | | | | Fatigue Salt |
|---|---|---|---|---|---|---|
| | | Q | $P_m$ | $P_m + P_b$ | $P_m + P_b + Q$ | |
| Hot Environment | 1 | 9.59E+03 | 3.01E+01 | 4.32E+01 | 9.63E+03 | |
| Cold Environment | 2a | 3.14E+03 | 3.01E+01 | 4.32E+01 | 3.19E+03 | |
| Cold Environment | 2b | 4.06E+03 | 3.01E+01 | 4.32E+01 | 4.10E+03 | |
| Minimum Ext. Press. | 3a | 9.59E+03 | 5.58E+01 | 1.13E+02 | 9.70E+03 | |
| Minimum Ext. Press. | 3b | 3.67E+03 | 5.58E+01 | 1.13E+02 | 3.79E+03 | |
| Increased Ext. Press. | 4a | 9.59E+03 | 2.68E+01 | 1.73E+01 | 9.61E+03 | |
| Increased Ext. Press. | 4b | 3.67E+03 | 2.68E+01 | 1.73E+01 | 3.69E+03 | |
| Vibration and Shock | 5a | 9.59E+03 | 6.83E+02 | 1.08E+03 | 1.07E+04 | 5.34E+03 |
| Vibration and Shock | 5b | 3.67E+03 | 6.83E+02 | 1.08E+03 | 4.75E+03 | 2.38E+03 |
| Vibration and Shock | 5c | 3.25E+03 | 6.83E+02 | 1.08E+03 | 4.33E+03 | 2.16E+03 |
| Free Drop - Top | 6a | 9.59E+03 | 1.01E+03 | 1.31E+03 | 1.09E+04 | |
| Free Drop - Top | 6b | 3.67E+03 | 1.01E+03 | 1.31E+03 | 4.98E+03 | |
| Free Drop - Top | 6c | 3.25E+03 | 1.01E+03 | 1.31E+03 | 4.56E+03 | |
| Free Drop - Side, 0 MER | 6a | 9.59E+03 | 1.34E+03 | 3.44E+03 | 1.30E+04 | |
| Free Drop - Side, 0 MER | 6b | 3.67E+03 | 1.34E+03 | 3.44E+03 | 7.11E+03 | |
| Free Drop - Side, 0 MER | 6c | 3.25E+03 | 1.34E+03 | 3.44E+03 | 6.69E+03 | |
| Free Drop - Side, 45 MER | 6a | 9.59E+03 | 1.34E+03 | 2.31E+03 | 1.19E+04 | |
| Free Drop - Side, 45 MER | 6b | 3.67E+03 | 1.34E+03 | 2.31E+03 | 5.98E+03 | |
| Free Drop - Side, 45 MER | 6c | 3.25E+03 | 1.34E+03 | 2.31E+03 | 5.56E+03 | |
| Maximum Stress Intensity | | 9.59E+03 | 1.34E+03 | 3.44E+03 | 1.30E+04 | |

NOTES:

1. Refer to Reference [2.2], corresponding Table 2.10.9.51.
2. $P_m < S_m = 18.7$ ksi
   $P_m + P_b < 1.5 \cdot S_m = 28.1$ ksi
   $P_m + P_b + Q < 3.0 \cdot S_m = 56.1$ ksi
3. See Table 2.32 for combination index identification.
4. For combinations with Salt not listed, the number of load cycles are few and therefore, the fatigue qualifications are met.
5. MER = Meridian, angle of orientation from the contact edge where stresses are given.

**Table 2.116. Summary of Stresses for Load Combinations Normal Conditions of Transport, Stress Point 8b (0.50 in. Wall Toroid)**

| Load Combination | Comb Index | Stress Intensity (psi) | | | | Fatigue Salt |
|---|---|---|---|---|---|---|
| | | Q | $P_m$ | $P_m + P_b$ | $P_m + P_b + Q$ | |
| Hot Environment | 1 | 1.97E+04 | 3.01E+01 | 1.69E+01 | 1.97E+04 | |
| Cold Environment | 2a | 1.10E+04 | 3.01E+01 | 1.69E+01 | 1.10E+04 | |
| Cold Environment | 2b | 9.62E+03 | 3.01E+01 | 1.69E+01 | 9.63E+03 | |
| Minimum Ext. Press. | 3a | 1.97E+04 | 5.58E+01 | 6.52E+00 | 1.97E+04 | |
| Minimum Ext. Press. | 3b | 1.20E+04 | 5.58E+01 | 6.52E+00 | 1.20E+04 | |
| Increased Ext. Press. | 4a | 1.97E+04 | 2.68E+01 | 3.68E+01 | 1.97E+04 | |
| Increased Ext. Press. | 4b | 1.20E+04 | 2.68E+01 | 3.68E+01 | 1.20E+04 | |
| Vibration and Shock | 5a | 1.97E+04 | 6.83E+02 | 6.46E+02 | 2.03E+04 | 1.02E+04 |
| Vibration and Shock | 5b | 1.20E+04 | 6.83E+02 | 6.46E+02 | 1.26E+04 | 6.32E+03 |
| Vibration and Shock | 5c | 7.87E+03 | 6.83E+02 | 6.46E+02 | 8.51E+03 | 4.26E+03 |
| Free Drop - Top | 6a | 1.97E+04 | 1.01E+03 | 9.33E+02 | 2.06E+04 | |
| Free Drop - Top | 6b | 1.20E+04 | 1.01E+03 | 9.33E+02 | 1.29E+04 | |
| Free Drop - Top | 6c | 7.87E+03 | 1.01E+03 | 9.33E+02 | 8.80E+03 | |
| Free Drop - Side, 0 MER | 6a | 1.97E+04 | 1.34E+03 | 9.11E+02 | 2.06E+04 | |
| Free Drop - Side, 0 MER | 6b | 1.20E+04 | 1.34E+03 | 9.11E+02 | 1.29E+04 | |
| Free Drop - Side, 0 MER | 6c | 7.87E+03 | 1.34E+03 | 9.11E+02 | 8.78E+03 | |
| Free Drop - Side, 45 MER | 6a | 1.97E+04 | 1.34E+03 | 1.30E+03 | 2.10E+04 | |
| Free Drop - Side, 45 MER | 6b | 1.20E+04 | 1.34E+03 | 1.30E+03 | 1.33E+04 | |
| Free Drop - Side, 45 MER | 6c | 7.87E+03 | 1.34E+03 | 1.30E+03 | 9.17E+03 | |
| Maximum Stress Intensity | | 1.97E+04 | 1.34E+03 | 1.30E+03 | 2.10E+04 | |

NOTES:

1. Refer to Reference [2.2], corresponding Table 2.10.9.52.
2. $P_m < S_m = 18.7$ ksi
   $P_m + P_b < 1.5 \cdot S_m = 28.1$ ksi
   $P_m + P_b + Q < 3.0 \cdot S_m = 56.1$ ksi
3. See Table 2.32 for combination index identification.
4. For combinations with Salt not listed, the number of load cycles are few and therefore, the fatigue qualifications are met.
5. MER = Meridian, angle of orientation from the contact edge where stresses are given.

**Table 2.117. Summary of Stresses for Load Combinations Normal Conditions of Transport, Stress Point 9a (0.50 in. Wall Toroid)**

| Load Combination | Comb Index | Stress Intensity (psi) | | | | Fatigue Salt |
|---|---|---|---|---|---|---|
| | | Q | $P_m$ | $P_m + P_b$ | $P_m + P_b + Q$ | |
| Hot Environment | 1 | 1.04E+04 | 1.33E+02 | 1.44E+02 | 1.06E+04 | |
| Cold Environment | 2a | 6.54E+03 | 1.33E+02 | 1.44E+02 | 6.69E+03 | |
| Cold Environment | 2b | 4.12E+03 | 1.33E+02 | 1.44E+02 | 4.26E+03 | |
| Minimum Ext. Press. | 3a | 1.04E+04 | 2.27E+02 | 2.44E+02 | 1.07E+04 | |
| Minimum Ext. Press. | 3b | 7.02E+03 | 2.27E+02 | 2.44E+02 | 7.26E+03 | |
| Increased Ext. Press. | 4a | 1.04E+04 | 8.96E+01 | 9.73E+01 | 1.05E+04 | |
| Increased Ext. Press. | 4b | 7.02E+03 | 8.96E+01 | 9.73E+01 | 7.12E+03 | |
| Vibration and Shock | 5a | 1.04E+04 | 7.33E+02 | 7.78E+02 | 1.12E+04 | 5.59E+03 |
| Vibration and Shock | 5b | 7.02E+03 | 7.33E+02 | 7.78E+02 | 7.80E+03 | 3.90E+03 |
| Vibration and Shock | 5c | 4.31E+03 | 7.33E+02 | 7.78E+02 | 5.09E+03 | 2.55E+03 |
| Free Drop - Top | 6a | 1.04E+04 | 8.56E+02 | 8.64E+02 | 1.13E+04 | |
| Free Drop - Top | 6b | 7.02E+03 | 8.56E+02 | 8.64E+02 | 7.88E+03 | |
| Free Drop - Top | 6c | 4.31E+03 | 8.56E+02 | 8.64E+02 | 5.18E+03 | |
| Free Drop - Side, 0 MER | 6a | 1.04E+04 | 9.22E+02 | 4.12E+02 | 1.08E+04 | |
| Free Drop - Side, 0 MER | 6b | 7.02E+03 | 9.22E+02 | 4.12E+02 | 7.43E+03 | |
| Free Drop - Side, 0 MER | 6c | 4.31E+03 | 9.22E+02 | 4.12E+02 | 4.73E+03 | |
| Free Drop - Side, 45 MER | 6a | 1.04E+04 | 2.20E+03 | 3.67E+03 | 1.41E+04 | |
| Free Drop - Side, 45 MER | 6b | 7.02E+03 | 2.20E+03 | 3.67E+03 | 1.07E+04 | |
| Free Drop - Side, 45 MER | 6c | 4.31E+03 | 2.20E+03 | 3.67E+03 | 7.98E+03 | |
| Maximum Stress Intensity | | 1.04E+04 | 2.20E+03 | 3.67E+03 | 1.41E+04 | |

NOTES:

1. Refer to Reference [2.2], corresponding Table 2.10.9.53.
2. $P_m < S_m = 18.7$ ksi
   $P_m + P_b < 1.5 \cdot S_m = 28.1$ ksi
   $P_m + P_b + Q < 3.0 \cdot S_m = 56.1$ ksi
3. See Table 2.32 for combination index identification.
4. For combinations with Salt not listed, the number of load cycles are few and therefore, the fatigue qualifications are met.
5. MER = Meridian, angle of orientation from the contact edge where stresses are given.

**Table 2.118. Summary of Stresses for Load Combinations Normal Conditions of Transport, Stress Point 9b (0.50 in. Wall Toroid)**

| Load Combination | Comb Index | Stress Intensity (psi) | | | | Fatigue Salt |
|---|---|---|---|---|---|---|
| | | Q | $P_m$ | $P_m + P_b$ | $P_m + P_b + Q$ | |
| Hot Environment | 1 | 8.94E+03 | 1.33E+02 | 1.23E+02 | 9.06E+03 | |
| Cold Environment | 2a | 6.16E+03 | 1.33E+02 | 1.23E+02 | 6.29E+03 | |
| Cold Environment | 2b | 3.84E+03 | 1.33E+02 | 1.23E+02 | 3.96E+03 | |
| Minimum Ext. Press. | 3a | 8.94E+03 | 2.27E+02 | 2.10E+02 | 9.15E+03 | |
| Minimum Ext. Press. | 3b | 6.12E+03 | 2.27E+02 | 2.10E+02 | 6.33E+03 | |
| Increased Ext. Press. | 4a | 8.94E+03 | 8.96E+01 | 8.20E+01 | 9.02E+03 | |
| Increased Ext. Press. | 4b | 6.12E+03 | 8.96E+01 | 8.20E+01 | 6.20E+03 | |
| Vibration and Shock | 5a | 8.94E+03 | 7.33E+02 | 7.89E+02 | 9.73E+03 | 4.86E+03 |
| Vibration and Shock | 5b | 6.12E+03 | 7.33E+02 | 7.89E+02 | 6.91E+03 | 3.45E+03 |
| Vibration and Shock | 5c | 4.21E+03 | 7.33E+02 | 7.89E+02 | 5.00E+03 | 2.50E+03 |
| Free Drop - Top | 6a | 8.94E+03 | 8.56E+02 | 8.47E+02 | 9.78E+03 | |
| Free Drop - Top | 6b | 6.12E+03 | 8.56E+02 | 8.47E+02 | 6.97E+03 | |
| Free Drop - Top | 6c | 4.21E+03 | 8.56E+02 | 8.47E+02 | 5.05E+03 | |
| Free Drop - Side, 0 MER | 6a | 8.94E+03 | 9.22E+02 | 1.93E+03 | 1.09E+04 | |
| Free Drop - Side, 0 MER | 6b | 6.12E+03 | 9.22E+02 | 1.93E+03 | 8.05E+03 | |
| Free Drop - Side, 0 MER | 6c | 4.21E+03 | 9.22E+02 | 1.93E+03 | 6.14E+03 | |
| Free Drop - Side, 45 MER | 6a | 8.94E+03 | 2.20E+03 | 8.05E+02 | 9.74E+03 | |
| Free Drop - Side, 45 MER | 6b | 6.12E+03 | 2.20E+03 | 8.05E+02 | 6.92E+03 | |
| Free Drop - Side, 45 MER | 6c | 4.21E+03 | 2.20E+03 | 8.05E+02 | 5.01E+03 | |
| Maximum Stress Intensity | | 8.94E+03 | 2.20E+03 | 1.93E+03 | 1.09E+04 | |

NOTES:

1. Refer to Reference [2.2], corresponding Table 2.10.9.54.
2. $P_m < S_m = 18.7$ ksi
   $P_m + P_b < 1.5 \cdot S_m = 28.1$ ksi
   $P_m + P_b + Q < 3.0 \cdot S_m = 56.1$ ksi
3. See Table 2.32 for combination index identification.
4. For combinations with Salt not listed, the number of load cycles are few and therefore, the fatigue qualifications are met.
5. MER = Meridian, angle of orientation from the contact edge where stresses are given.

**Table 2.119. Summary of Stresses for Load Combinations Normal Conditions of Transport, Stress Point 10a (0.50 in. Wall Toroid)**

| Load Combination | Comb Index | Stress Intensity (psi) | | | | Fatigue Salt |
|---|---|---|---|---|---|---|
| | | Q | $P_m$ | $P_m + P_b$ | $P_m + P_b + Q$ | |
| Hot Environment | 1 | 1.11E+04 | 6.06E+01 | 6.32E+01 | 1.11E+04 | |
| Cold Environment | 2a | 1.86E+03 | 6.06E+01 | 6.32E+01 | 1.93E+03 | |
| Cold Environment | 2b | 2.70E+02 | 6.06E+01 | 6.32E+01 | 3.33E+02 | |
| Minimum Ext. Press. | 3a | 1.11E+04 | 1.18E+02 | 1.24E+02 | 1.12E+04 | |
| Minimum Ext. Press. | 3b | 1.80E+03 | 1.18E+02 | 1.24E+02 | 1.92E+03 | |
| Increased Ext. Press. | 4a | 1.11E+04 | 3.56E+01 | 3.63E+01 | 1.11E+04 | |
| Increased Ext. Press. | 4b | 1.80E+03 | 3.56E+01 | 3.63E+01 | 1.83E+03 | |
| Vibration and Shock | 5a | 1.11E+04 | 8.52E+02 | 8.09E+02 | 1.19E+04 | 5.94E+03 |
| Vibration and Shock | 5b | 1.80E+03 | 8.52E+02 | 8.09E+02 | 2.61E+03 | 1.30E+03 |
| Vibration and Shock | 5c | 2.57E+02 | 8.52E+02 | 8.09E+02 | 1.07E+03 | 5.33E+02 |
| Free Drop - Top | 6a | 1.11E+04 | 1.19E+03 | 1.19E+03 | 1.23E+04 | |
| Free Drop - Top | 6b | 1.80E+03 | 1.19E+03 | 1.19E+03 | 2.99E+03 | |
| Free Drop - Top | 6c | 2.57E+02 | 1.19E+03 | 1.19E+03 | 1.45E+03 | |
| Free Drop - Side, 0 MER | 6a | 1.11E+04 | 2.03E+03 | 1.52E+03 | 1.26E+04 | |
| Free Drop - Side, 0 MER | 6b | 1.80E+03 | 2.03E+03 | 1.52E+03 | 3.32E+03 | |
| Free Drop - Side, 0 MER | 6c | 2.57E+02 | 2.03E+03 | 1.52E+03 | 1.78E+03 | |
| Free Drop - Side, 45 MER | 6a | 1.11E+04 | 2.13E+03 | 1.54E+03 | 1.26E+04 | |
| Free Drop - Side, 45 MER | 6b | 1.80E+03 | 2.13E+03 | 1.54E+03 | 3.34E+03 | |
| Free Drop - Side, 45 MER | 6c | 2.57E+02 | 2.13E+03 | 1.54E+03 | 1.80E+03 | |
| Maximum Stress Intensity | | 1.11E+04 | 2.13E+03 | 1.54E+03 | 1.26E+04 | |

NOTES:

1. Refer to Reference [2.2], corresponding Table 2.10.9.55.
2. $P_m < S_m = 18.7$ ksi
   $P_m + P_b < 1.5 \cdot S_m = 28.1$ ksi
   $P_m + P_b + Q < 3.0 \cdot S_m = 56.1$ ksi
3. See Table 2.32 for combination index identification.
4. For combinations with Salt not listed, the number of load cycles are few and therefore, the fatigue qualifications are met.
5. MER = Meridian, angle of orientation from the contact edge where stresses are given.

**Table 2.120. Summary of Stresses for Load Combinations Normal Conditions of Transport, Stress Point 10b (0.50 in. Wall Toroid)**

| Load Combination | Comb Index | Stress Intensity (psi) | | | | Fatigue Salt |
|---|---|---|---|---|---|---|
| | | Q | $P_m$ | $P_m + P_b$ | $P_m + P_b + Q$ | |
| Hot Environment | 1 | 1.07E+04 | 6.06E+01 | 5.80E+01 | 1.07E+04 | |
| Cold Environment | 2a | 2.11E+03 | 6.06E+01 | 5.80E+01 | 2.16E+03 | |
| Cold Environment | 2b | 2.47E+02 | 6.06E+01 | 5.80E+01 | 3.05E+02 | |
| Minimum Ext. Press. | 3a | 1.07E+04 | 1.18E+02 | 1.13E+02 | 1.08E+04 | |
| Minimum Ext. Press. | 3b | 2.04E+03 | 1.18E+02 | 1.13E+02 | 2.16E+03 | |
| Increased Ext. Press. | 4a | 1.07E+04 | 3.56E+01 | 3.49E+01 | 1.07E+04 | |
| Increased Ext. Press. | 4b | 2.04E+03 | 3.56E+01 | 3.49E+01 | 2.08E+03 | |
| Vibration and Shock | 5a | 1.07E+04 | 8.52E+02 | 9.22E+02 | 1.16E+04 | 5.80E+03 |
| Vibration and Shock | 5b | 2.04E+03 | 8.52E+02 | 9.22E+02 | 2.97E+03 | 1.48E+03 |
| Vibration and Shock | 5c | 2.37E+02 | 8.52E+02 | 9.22E+02 | 1.16E+03 | 5.79E+02 |
| Free Drop - Top | 6a | 1.07E+04 | 1.19E+03 | 1.19E+03 | 1.19E+04 | |
| Free Drop - Top | 6b | 2.04E+03 | 1.19E+03 | 1.19E+03 | 3.23E+03 | |
| Free Drop - Top | 6c | 2.37E+02 | 1.19E+03 | 1.19E+03 | 1.43E+03 | |
| Free Drop - Side, 0 MER | 6a | 1.07E+04 | 2.03E+03 | 2.60E+03 | 1.33E+04 | |
| Free Drop - Side, 0 MER | 6b | 2.04E+03 | 2.03E+03 | 2.60E+03 | 4.64E+03 | |
| Free Drop - Side, 0 MER | 6c | 2.37E+02 | 2.03E+03 | 2.60E+03 | 2.84E+03 | |
| Free Drop - Side, 45 MER | 6a | 1.07E+04 | 2.13E+03 | 2.79E+03 | 1.35E+04 | |
| Free Drop - Side, 45 MER | 6b | 2.04E+03 | 2.13E+03 | 2.79E+03 | 4.83E+03 | |
| Free Drop - Side, 45 MER | 6c | 2.37E+02 | 2.13E+03 | 2.79E+03 | 3.03E+03 | |
| Maximum Stress Intensity | | 1.07E+04 | 2.13E+03 | 2.79E+03 | 1.35E+04 | |

NOTES:

1. Refer to Reference [2.2], corresponding Table 2.10.9.56.
2. $P_m < S_m = 18.7$ ksi
   $P_m + P_b < 1.5 \cdot S_m = 28.1$ ksi
   $P_m + P_b + Q < 3.0 \cdot S_m = 56.1$ ksi
3. See Table 2.32 for combination index identification.
4. For combinations with Salt not listed, the number of load cycles are few and therefore, the fatigue qualifications are met.
5. MER = Meridian, angle of orientation from the contact edge where stresses are given.

**Table 2.121. Summary of Stresses for Load Combinations Normal Conditions of Transport, Stress Point 11a (0.50 in. Wall Toroid)**

| Load Combination | Comb Index | Stress Intensity (psi) | | | | Fatigue Salt |
|---|---|---|---|---|---|---|
| | | Q | $P_m$ | $P_m + P_b$ | $P_m + P_b + Q$ | |
| Hot Environment | 1 | 9.52E+03 | 1.31E+02 | 1.42E+02 | 9.66E+03 | |
| Cold Environment | 2a | 6.54E+03 | 1.31E+02 | 1.42E+02 | 6.88E+03 | |
| Cold Environment | 2b | 4.07E+03 | 1.31E+02 | 1.42E+02 | 4.22E+03 | |
| Minimum Ext. Press. | 3a | 9.52E+03 | 2.23E+02 | 2.40E+02 | 9.76E+03 | |
| Minimum Ext. Press. | 3b | 6.62E+03 | 2.23E+02 | 2.40E+02 | 6.86E+03 | |
| Increased Ext. Press. | 4a | 9.52E+03 | 8.80E+01 | 9.56E+01 | 9.62E+03 | |
| Increased Ext. Press. | 4b | 6.62E+03 | 8.80E+01 | 9.56E+01 | 6.72E+03 | |
| Vibration and Shock | 5a | 9.52E+03 | 7.45E+02 | 7.73E+02 | 1.03E+04 | 5.15E+03 |
| Vibration and Shock | 5b | 6.62E+03 | 7.45E+02 | 7.73E+02 | 7.40E+03 | 3.70E+03 |
| Vibration and Shock | 5c | 4.25E+03 | 7.45E+02 | 7.73E+02 | 5.02E+03 | 2.51E+03 |
| Free Drop - Top | 6a | 9.52E+03 | 8.54E+02 | 8.61E+02 | 1.04E+04 | |
| Free Drop - Top | 6b | 6.62E+03 | 8.54E+02 | 8.61E+02 | 7.48E+03 | |
| Free Drop - Top | 6c | 4.25E+03 | 8.54E+02 | 8.61E+02 | 5.11E+03 | |
| Free Drop - Side, 0 MER | 6a | 9.52E+03 | 1.11E+03 | 2.60E+02 | 9.78E+03 | |
| Free Drop - Side, 0 MER | 6b | 6.62E+03 | 1.11E+03 | 2.60E+02 | 6.88E+03 | |
| Free Drop - Side, 0 MER | 6c | 4.25E+03 | 1.11E+03 | 2.60E+02 | 4.51E+03 | |
| Free Drop - Side, 45 MER | 6a | 9.52E+03 | 2.61E+03 | 4.27E+03 | 1.38E+04 | |
| Free Drop - Side, 45 MER | 6b | 6.62E+03 | 2.61E+03 | 4.27E+03 | 1.09E+04 | |
| Free Drop - Side, 45 MER | 6c | 4.25E+03 | 2.61E+03 | 4.27E+03 | 8.52E+03 | |
| Maximum Stress Intensity | | 9.52E+03 | 2.61E+03 | 4.27E+03 | 1.38E+04 | |

NOTES:

1. Refer to Reference [2.2], corresponding Table 2.10.9.57.
2. $P_m < S_m = 18.7$ ksi
   $P_m + P_b < 1.5 \cdot S_m = 28.1$ ksi
   $P_m + P_b + Q < 3.0 \cdot S_m = 56.1$ ksi
3. See Table 2.32 for combination index identification.
4. For combinations with Salt not listed, the number of load cycles are few and therefore, the fatigue qualifications are met.
5. MER = Meridian, angle of orientation from the contact edge where stresses are given.

**Table 2.122. Summary of Stresses for Load Combinations Normal Conditions of Transport, Stress Point 11b (0.50 in. Wall Toroid)**

| Load Combination | Comb Index | Stress Intensity (psi) | | | | Fatigue Salt |
|---|---|---|---|---|---|---|
| | | Q | $P_m$ | $P_m + P_b$ | $P_m + P_b + Q$ | |
| Hot Environment | 1 | 7.77E+03 | 1.31E+02 | 1.20E+02 | 7.89E+03 | |
| Cold Environment | 2a | 6.17E+03 | 1.31E+02 | 1.20E+02 | 6.29E+03 | |
| Cold Environment | 2b | 4.02E+03 | 1.31E+02 | 1.20E+02 | 4.14E+03 | |
| Minimum Ext. Press. | 3a | 7.77E+03 | 2.23E+02 | 2.06E+02 | 7.98E+03 | |
| Minimum Ext. Press. | 3b | 6.48E+03 | 2.23E+02 | 2.06E+02 | 6.69E+03 | |
| Increased Ext. Press. | 4a | 7.77E+03 | 8.80E+01 | 8.03E+01 | 7.85E+03 | |
| Increased Ext. Press. | 4b | 6.48E+03 | 8.80E+01 | 8.03E+01 | 6.56E+03 | |
| Vibration and Shock | 5a | 7.77E+03 | 7.45E+02 | 8.00E+02 | 8.57E+03 | 4.29E+03 |
| Vibration and Shock | 5b | 6.48E+03 | 7.45E+02 | 8.00E+02 | 7.28E+03 | 3.64E+03 |
| Vibration and Shock | 5c | 4.31E+03 | 7.45E+02 | 8.00E+02 | 5.11E+03 | 2.55E+03 |
| Free Drop - Top | 6a | 7.77E+03 | 8.54E+02 | 8.46E+02 | 8.62E+03 | |
| Free Drop - Top | 6b | 6.48E+03 | 8.54E+02 | 8.46E+02 | 7.33E+03 | |
| Free Drop - Top | 6c | 4.31E+03 | 8.54E+02 | 8.46E+02 | 5.16E+03 | |
| Free Drop - Side, 0 MER | 6a | 7.77E+03 | 1.11E+03 | 2.12E+03 | 9.89E+03 | |
| Free Drop - Side, 0 MER | 6b | 6.48E+03 | 1.11E+03 | 2.12E+03 | 8.60E+03 | |
| Free Drop - Side, 0 MER | 6c | 4.31E+03 | 1.11E+03 | 2.12E+03 | 6.43E+03 | |
| Free Drop - Side, 45 MER | 6a | 7.77E+03 | 2.61E+03 | 9.99E+02 | 8.77E+03 | |
| Free Drop - Side, 45 MER | 6b | 6.48E+03 | 2.61E+03 | 9.99E+02 | 7.48E+03 | |
| Free Drop - Side, 45 MER | 6c | 4.31E+03 | 2.61E+03 | 9.99E+02 | 5.31E+03 | |
| Maximum Stress Intensity | | 7.77E+03 | 2.61E+03 | 2.12E+03 | 9.89E+03 | |

NOTES:

1. Refer to Reference [2.2], corresponding Table 2.10.9.58.
2. $P_m < S_m = 18.7$ ksi
   $P_m + P_b < 1.5 \cdot S_m = 28.1$ ksi
   $P_m + P_b + Q < 3.0 \cdot S_m = 56.1$ ksi
3. See Table 2.32 for combination index identification.
4. For combinations with Salt not listed, the number of load cycles are few and therefore, the fatigue qualifications are met.
5. MER = Meridian, angle of orientation from the contact edge where stresses are given.

**Table 2.123. Summary of Stresses for Load Combinations Normal Conditions of Transport, Stress Point 12a (0.50 in. Wall Toroid)**

| Load Combination | Comb Index | Stress Intensity (psi) | | | | Fatigue Salt |
|---|---|---|---|---|---|---|
| | | Q | $P_m$ | $P_m + P_b$ | $P_m + P_b + Q$ | |
| Hot Environment | 1 | 1.04E+04 | 5.88E+01 | 6.16E+01 | 1.05E+04 | |
| Cold Environment | 2a | 1.86E+03 | 5.88E+01 | 6.16E+01 | 1.92E+03 | |
| Cold Environment | 2b | 2.29E+02 | 5.88E+01 | 6.16E+01 | 2.91E+02 | |
| Minimum Ext. Press. | 3a | 1.04E+04 | 1.15E+02 | 1.21E+02 | 1.05E+04 | |
| Minimum Ext. Press. | 3b | 1.80E+03 | 1.15E+02 | 1.21E+02 | 1.92E+03 | |
| Increased Ext. Press. | 4a | 1.04E+04 | 3.44E+01 | 3.51E+01 | 1.04E+04 | |
| Increased Ext. Press. | 4b | 1.80E+03 | 3.44E+01 | 3.51E+01 | 1.83E+03 | |
| Vibration and Shock | 5a | 1.04E+04 | 8.49E+02 | 8.08E+02 | 1.12E+04 | 5.60E+03 |
| Vibration and Shock | 5b | 1.80E+03 | 8.49E+02 | 8.08E+02 | 2.61E+03 | 1.30E+03 |
| Vibration and Shock | 5c | 2.24E+02 | 8.49E+02 | 8.08E+02 | 1.03E+03 | 5.16E+02 |
| Free Drop - Top | 6a | 1.04E+04 | 1.19E+03 | 1.19E+03 | 1.16E+04 | |
| Free Drop - Top | 6b | 1.80E+03 | 1.19E+03 | 1.19E+03 | 2.99E+03 | |
| Free Drop - Top | 6c | 2.24E+02 | 1.19E+03 | 1.19E+03 | 1.41E+03 | |
| Free Drop - Side, 0 MER | 6a | 1.04E+04 | 2.15E+03 | 1.71E+03 | 1.21E+04 | |
| Free Drop - Side, 0 MER | 6b | 1.80E+03 | 2.15E+03 | 1.71E+03 | 3.51E+03 | |
| Free Drop - Side, 0 MER | 6c | 2.24E+02 | 2.15E+03 | 1.71E+03 | 1.93E+03 | |
| Free Drop - Side, 45 MER | 6a | 1.04E+04 | 2.22E+03 | 1.44E+03 | 1.18E+04 | |
| Free Drop - Side, 45 MER | 6b | 1.80E+03 | 2.22E+03 | 1.44E+03 | 3.24E+03 | |
| Free Drop - Side, 45 MER | 6c | 2.24E+02 | 2.22E+03 | 1.44E+03 | 1.66E+03 | |
| Maximum Stress Intensity | | 1.04E+04 | 2.22E+03 | 1.71E+03 | 1.21E+04 | |

NOTES:

1. Refer to Reference [2.2], corresponding Table 2.10.9.59.
2. $P_m < S_m = 18.7$ ksi
   $P_m + P_b < 1.5 \cdot S_m = 28.1$ ksi
   $P_m + P_b + Q < 3.0 \cdot S_m = 56.1$ ksi
3. See Table 2.32 for combination index identification.
4. For combinations with Salt not listed, the number of load cycles are few and therefore, the fatigue qualifications are met.
5. MER = Meridian, angle of orientation from the contact edge where stresses are given.

**Table 2.124. Summary of Stresses for Load Combinations Normal Conditions of Transport, Stress Point 12b (0.50 in. Wall Toroid)**

| Load Combination | Comb Index | Stress Intensity (psi) | | | | Fatigue Salt |
|---|---|---|---|---|---|---|
| | | Q | $P_m$ | $P_m + P_b$ | $P_m + P_b + Q$ | |
| Hot Environment | 1 | 9.49E+03 | 5.88E+01 | 5.59E+01 | 9.54E+03 | |
| Cold Environment | 2a | 2.13E+03 | 5.88E+01 | 5.59E+01 | 2.19E+03 | |
| Cold Environment | 2b | 2.28E+02 | 5.88E+01 | 5.59E+01 | 2.83E+02 | |
| Minimum Ext. Press. | 3a | 9.49E+03 | 1.15E+02 | 1.09E+02 | 9.60E+03 | |
| Minimum Ext. Press. | 3b | 2.07E+03 | 1.15E+02 | 1.09E+02 | 2.18E+03 | |
| Increased Ext. Press. | 4a | 9.49E+03 | 3.44E+01 | 3.36E+01 | 9.52E+03 | |
| Increased Ext. Press. | 4b | 2.07E+03 | 3.44E+01 | 3.36E+01 | 2.10E+03 | |
| Vibration and Shock | 5a | 9.49E+03 | 8.49E+02 | 9.16E+02 | 1.04E+04 | 5.20E+03 |
| Vibration and Shock | 5b | 2.07E+03 | 8.49E+02 | 9.16E+02 | 2.98E+03 | 1.49E+03 |
| Vibration and Shock | 5c | 2.23E+02 | 8.49E+02 | 9.16E+02 | 1.14E+03 | 5.69E+02 |
| Free Drop - Top | 6a | 9.49E+03 | 1.19E+03 | 1.19E+03 | 1.07E+04 | |
| Free Drop - Top | 6b | 2.07E+03 | 1.19E+03 | 1.19E+03 | 3.26E+03 | |
| Free Drop - Top | 6c | 2.23E+02 | 1.19E+03 | 1.19E+03 | 1.41E+03 | |
| Free Drop - Side, 0 MER | 6a | 9.49E+03 | 2.15E+03 | 2.65E+03 | 1.21E+04 | |
| Free Drop - Side, 0 MER | 6b | 2.07E+03 | 2.15E+03 | 2.65E+03 | 4.72E+03 | |
| Free Drop - Side, 0 MER | 6c | 2.23E+02 | 2.15E+03 | 2.65E+03 | 2.87E+03 | |
| Free Drop - Side, 45 MER | 6a | 9.49E+03 | 2.22E+03 | 3.02E+03 | 1.25E+04 | |
| Free Drop - Side, 45 MER | 6b | 2.07E+03 | 2.22E+03 | 3.02E+03 | 5.09E+03 | |
| Free Drop - Side, 45 MER | 6c | 2.23E+02 | 2.22E+03 | 3.02E+03 | 3.24E+03 | |
| Maximum Stress Intensity | | 9.49E+03 | 2.22E+03 | 3.02E+03 | 1.25E+04 | |

NOTES:

1. Refer to Reference [2.2], corresponding Table 2.10.9.60.
2. $P_m < S_m = 18.7$ ksi
   $P_m + P_b < 1.5 \cdot S_m = 28.1$ ksi
   $P_m + P_b + Q < 3.0 \cdot S_m = 56.1$ ksi
3. See Table 2.32 for combination index identification.
4. For combinations with Salt not listed, the number of load cycles are few and therefore, the fatigue qualifications are met.
5. MER = Meridian, angle of orientation from the contact edge where stresses are given.

**Table 2.125. Summary of Stresses for Load Combinations Normal Conditions of Transport, Stress Point 13a (0.50 in. Wall Toroid)**

| Load Combination | Comb Index | Stress Intensity (psi) | | | | Fatigue Salt |
|---|---|---|---|---|---|---|
| | | Q | $P_m$ | $P_m + P_b$ | $P_m + P_b + Q$ | |
| Hot Environment | 1 | 1.08E+04 | 1.34E+02 | 1.44E+02 | 1.09E+04 | |
| Cold Environment | 2a | 6.61E+03 | 1.34E+02 | 1.44E+02 | 6.76E+03 | |
| Cold Environment | 2b | 4.03E+03 | 1.34E+02 | 1.44E+02 | 4.17E+03 | |
| Minimum Ext. Press. | 3a | 1.08E+04 | 2.28E+02 | 2.44E+02 | 1.10E+04 | |
| Minimum Ext. Press. | 3b | 6.86E+03 | 2.28E+02 | 2.44E+02 | 7.11E+03 | |
| Increased Ext. Press. | 4a | 1.08E+04 | 8.97E+01 | 9.70E+01 | 1.09E+04 | |
| Increased Ext. Press. | 4b | 6.86E+03 | 8.97E+01 | 9.70E+01 | 6.96E+03 | |
| Vibration and Shock | 5a | 1.08E+04 | 7.53E+02 | 8.22E+02 | 1.16E+04 | 5.81E+03 |
| Vibration and Shock | 5b | 6.86E+03 | 7.53E+02 | 8.22E+02 | 7.69E+03 | 3.84E+03 |
| Vibration and Shock | 5c | 4.25E+03 | 7.53E+02 | 8.22E+02 | 5.07E+03 | 2.54E+03 |
| Free Drop - Top | 6a | 1.08E+04 | 8.58E+02 | 9.38E+02 | 1.17E+04 | |
| Free Drop - Top | 6b | 6.86E+03 | 8.58E+02 | 9.38E+02 | 7.80E+03 | |
| Free Drop - Top | 6c | 4.25E+03 | 8.58E+02 | 9.38E+02 | 5.19E+03 | |
| Free Drop - Side, 0 MER | 6a | 1.08E+04 | 7.17E+02 | 8.10E+02 | 1.16E+04 | |
| Free Drop - Side, 0 MER | 6b | 6.86E+03 | 7.17E+02 | 8.10E+02 | 7.67E+03 | |
| Free Drop - Side, 0 MER | 6c | 4.25E+03 | 7.17E+02 | 8.10E+02 | 5.06E+03 | |
| Free Drop - Side, 45 MER | 6a | 1.08E+04 | 2.45E+03 | 3.64E+03 | 1.44E+04 | |
| Free Drop - Side, 45 MER | 6b | 6.86E+03 | 2.45E+03 | 3.64E+03 | 1.05E+04 | |
| Free Drop - Side, 45 MER | 6c | 4.25E+03 | 2.45E+03 | 3.64E+03 | 7.89E+03 | |
| Maximum Stress Intensity | | 1.08E+04 | 2.45E+03 | 3.64E+03 | 1.44E+04 | |

NOTES:

1. Refer to Reference [2.2], corresponding Table 2.10.9.61.
2. $P_m < S_m = 18.7$ ksi
   $P_m + P_b < 1.5 \cdot S_m = 28.1$ ksi
   $P_m + P_b + Q < 3.0 \cdot S_m = 56.1$ ksi
3. See Table 2.32 for combination index identification.
4. For combinations with Salt not listed, the number of load cycles are few and therefore, the fatigue qualifications are met.
5. MER = Meridian, angle of orientation from the contact edge where stresses are given.

**Table 2.126. Summary of Stresses for Load Combinations Normal Conditions of Transport, Stress Point 13b (0.50 in. Wall Toroid)**

| Load Combination | Comb Index | Stress Intensity (psi) | | | | Fatigue Salt |
|---|---|---|---|---|---|---|
| | | Q | $P_m$ | $P_m + P_b$ | $P_m + P_b + Q$ | |
| Hot Environment | 1 | 9.28E+03 | 1.34E+02 | 1.25E+02 | 9.40E+03 | |
| Cold Environment | 2a | 6.13E+03 | 1.34E+02 | 1.25E+02 | 6.25E+03 | |
| Cold Environment | 2b | 4.00E+03 | 1.34E+02 | 1.25E+02 | 4.12E+03 | |
| Minimum Ext. Press. | 3a | 9.28E+03 | 2.28E+02 | 2.13E+02 | 9.49E+03 | |
| Minimum Ext. Press. | 3b | 6.12E+03 | 2.28E+02 | 2.13E+02 | 6.34E+03 | |
| Increased Ext. Press. | 4a | 9.28E+03 | 8.97E+01 | 8.23E+01 | 9.36E+03 | |
| Increased Ext. Press. | 4b | 6.12E+03 | 8.97E+01 | 8.23E+01 | 6.21E+03 | |
| Vibration and Shock | 5a | 9.28E+03 | 7.53E+02 | 7.18E+02 | 9.99E+03 | 5.00E+03 |
| Vibration and Shock | 5b | 6.12E+03 | 7.53E+02 | 7.18E+02 | 6.84E+03 | 3.42E+03 |
| Vibration and Shock | 5c | 4.42E+03 | 7.53E+02 | 7.18E+02 | 5.13E+03 | 2.57E+03 |
| Free Drop - Top | 6a | 9.28E+03 | 8.58E+02 | 7.78E+02 | 1.01E+04 | |
| Free Drop - Top | 6b | 6.12E+03 | 8.58E+02 | 7.78E+02 | 6.90E+03 | |
| Free Drop - Top | 6c | 4.42E+03 | 8.58E+02 | 7.78E+02 | 5.19E+03 | |
| Free Drop - Side, 0 MER | 6a | 9.28E+03 | 7.17E+02 | 1.18E+03 | 1.05E+04 | |
| Free Drop - Side, 0 MER | 6b | 6.12E+03 | 7.17E+02 | 1.18E+03 | 7.30E+03 | |
| Free Drop - Side, 0 MER | 6c | 4.42E+03 | 7.17E+02 | 1.18E+03 | 5.60E+03 | |
| Free Drop - Side, 45 MER | 6a | 9.28E+03 | 2.45E+03 | 1.40E+03 | 1.07E+04 | |
| Free Drop - Side, 45 MER | 6b | 6.12E+03 | 2.45E+03 | 1.40E+03 | 7.52E+03 | |
| Free Drop - Side, 45 MER | 6c | 4.42E+03 | 2.45E+03 | 1.40E+03 | 5.82E+03 | |
| Maximum Stress Intensity | | 9.28E+03 | 2.45E+03 | 1.40E+03 | 1.07E+04 | |

NOTES:

1. Refer to Reference [2.2], corresponding Table 2.10.9.62.
2. $P_m < S_m = 18.7$ ksi
   $P_m + P_b < 1.5 \cdot S_m = 28.1$ ksi
   $P_m + P_b + Q < 3.0 \cdot S_m = 56.1$ ksi
3. See Table 2.32 for combination index identification.
4. For combinations with Salt not listed, the number of load cycles are few and therefore, the fatigue qualifications are met.
5. MER = Meridian, angle of orientation from the contact edge where stresses are given.

**Table 2.127. Summary of Stresses for Load Combinations Normal Conditions of Transport, Stress Point 14a (0.50 in. Wall Toroid)**

| Load Combination | Comb Index | Stress Intensity (psi) | | | | Fatigue Salt |
|---|---|---|---|---|---|---|
| | | Q | $P_m$ | $P_m + P_b$ | $P_m + P_b + Q$ | |
| Hot Environment | 1 | 1.16E+04 | 6.12E+01 | 6.36E+01 | 1.16E+04 | |
| Cold Environment | 2a | 1.96E+03 | 6.12E+01 | 6.36E+01 | 2.03E+03 | |
| Cold Environment | 2b | 2.46E+02 | 6.12E+01 | 6.36E+01 | 3.09E+02 | |
| Minimum Ext. Press. | 3a | 1.16E+04 | 1.19E+02 | 1.24E+02 | 1.17E+04 | |
| Minimum Ext. Press. | 3b | 1.89E+03 | 1.19E+02 | 1.24E+02 | 2.02E+03 | |
| Increased Ext. Press. | 4a | 1.16E+04 | 3.56E+01 | 3.63E+01 | 1.16E+04 | |
| Increased Ext. Press. | 4b | 1.89E+03 | 3.56E+01 | 3.63E+01 | 1.93E+03 | |
| Vibration and Shock | 5a | 1.16E+04 | 8.31E+02 | 8.28E+02 | 1.24E+04 | 6.20E+03 |
| Vibration and Shock | 5b | 1.89E+03 | 8.31E+02 | 8.28E+02 | 2.72E+03 | 1.36E+03 |
| Vibration and Shock | 5c | 2.33E+02 | 8.31E+02 | 8.28E+02 | 1.06E+03 | 5.30E+02 |
| Free Drop - Top | 6a | 1.16E+04 | 1.19E+03 | 1.26E+03 | 1.28E+04 | |
| Free Drop - Top | 6b | 1.89E+03 | 1.19E+03 | 1.26E+03 | 3.15E+03 | |
| Free Drop - Top | 6c | 2.33E+02 | 1.19E+03 | 1.26E+03 | 1.49E+03 | |
| Free Drop - Side, 0 MER | 6a | 1.16E+04 | 1.57E+03 | 1.01E+03 | 1.26E+04 | |
| Free Drop - Side, 0 MER | 6b | 1.89E+03 | 1.57E+03 | 1.01E+03 | 2.90E+03 | |
| Free Drop - Side, 0 MER | 6c | 2.33E+02 | 1.57E+03 | 1.01E+03 | 1.24E+03 | |
| Free Drop - Side, 45 MER | 6a | 1.16E+04 | 2.45E+03 | 2.13E+03 | 1.37E+04 | |
| Free Drop - Side, 45 MER | 6b | 1.89E+03 | 2.45E+03 | 2.13E+03 | 4.02E+03 | |
| Free Drop - Side, 45 MER | 6c | 2.33E+02 | 2.45E+03 | 2.13E+03 | 2.36E+03 | |
| Maximum Stress Intensity | | 1.16E+04 | 2.45E+03 | 2.13E+04 | 1.37E+04 | |

NOTES:

1. Refer to Reference [2.2], corresponding Table 2.10.9.63.
2. $P_m < S_m = 18.7$ ksi
   $P_m + P_b < 1.5 \cdot S_m = 28.1$ ksi
   $P_m + P_b + Q < 3.0 \cdot S_m = 56.1$ ksi
3. See Table 2.32 for combination index identification.
4. For combinations with Salt not listed, the number of load cycles are few and therefore, the fatigue qualifications are met.
5. MER = Meridian, angle of orientation from the contact edge where stresses are given.

**Table 2.128. Summary of Stresses for Load Combinations Normal Conditions of Transport, Stress Point 14b (0.50 in. Wall Toroid)**

| Load Combination | Comb Index | Stress Intensity (psi) | | | | Fatigue Salt |
|---|---|---|---|---|---|---|
| | | Q | $P_m$ | $P_m + P_b$ | $P_m + P_b + Q$ | |
| Hot Environment | 1 | 1.10E+04 | 6.12E+01 | 5.88E+01 | 1.11E+04 | |
| Cold Environment | 2a | 2.02E+03 | 6.12E+01 | 5.88E+01 | 2.08E+03 | |
| Cold Environment | 2b | 2.34E+02 | 6.12E+01 | 5.88E+01 | 2.92E+02 | |
| Minimum Ext. Press. | 3a | 1.10E+04 | 1.19E+02 | 1.13E+02 | 1.12E+04 | |
| Minimum Ext. Press. | 3b | 1.98E+03 | 1.19E+02 | 1.13E+02 | 2.09E+03 | |
| Increased Ext. Press. | 4a | 1.10E+04 | 3.56E+01 | 3.49E+01 | 1.11E+04 | |
| Increased Ext. Press. | 4b | 1.98E+03 | 3.56E+01 | 3.49E+01 | 2.01E+03 | |
| Vibration and Shock | 5a | 1.10E+04 | 8.31E+02 | 8.70E+02 | 1.19E+04 | 5.96E+03 |
| Vibration and Shock | 5b | 1.98E+03 | 8.31E+02 | 8.70E+02 | 2.85E+03 | 1.42E+03 |
| Vibration and Shock | 5c | 2.25E+02 | 8.31E+02 | 8.70E+02 | 1.10E+03 | 5.48E+02 |
| Free Drop - Top | 6a | 1.10E+04 | 1.19E+03 | 1.12E+03 | 1.22E+04 | |
| Free Drop - Top | 6b | 1.98E+03 | 1.19E+03 | 1.12E+03 | 3.10E+03 | |
| Free Drop - Top | 6c | 2.25E+02 | 1.19E+03 | 1.12E+03 | 1.35E+03 | |
| Free Drop - Side, 0 MER | 6a | 1.10E+04 | 1.57E+03 | 2.19E+03 | 1.32E+04 | |
| Free Drop - Side, 0 MER | 6b | 1.98E+03 | 1.57E+03 | 2.19E+03 | 4.17E+03 | |
| Free Drop - Side, 0 MER | 6c | 2.25E+02 | 1.57E+03 | 2.19E+03 | 2.42E+03 | |
| Free Drop - Side, 45 MER | 6a | 1.10E+04 | 2.45E+03 | 2.88E+03 | 1.39E+04 | |
| Free Drop - Side, 45 MER | 6b | 1.98E+03 | 2.45E+03 | 2.88E+03 | 4.86E+03 | |
| Free Drop - Side, 45 MER | 6c | 2.25E+02 | 2.45E+03 | 2.88E+03 | 3.11E+03 | |
| Maximum Stress Intensity | | 1.10E+04 | 2.45E+03 | 2.88E+03 | 1.39E+04 | |

NOTES:

1. Refer to Reference [2.2], corresponding Table 2.10.9.64.
2. $P_m < S_m = 18.7$ ksi
   $P_m + P_b < 1.5 \cdot S_m = 28.1$ ksi
   $P_m + P_b + Q < 3.0 \cdot S_m = 56.1$ ksi
3. See Table 2.32 for combination index identification.
4. For combinations with Salt not listed, the number of load cycles are few and therefore, the fatigue qualifications are met.
5. MER = Meridian, angle of orientation from the contact edge where stresses are given.

**Table 2.129. Summary of Stresses for Load Combinations Normal Conditions of Transport, Stress Point 15a (0.50 in. Wall Toroid)**

| Load Combination | Comb Index | Stress Intensity (psi) | | | | Fatigue Salt |
|---|---|---|---|---|---|---|
| | | Q | $P_m$ | $P_m + P_b$ | $P_m + P_b + Q$ | |
| Hot Environment | 1 | 6.87E+03 | 4.51E+01 | 8.90E+01 | 6.96E+03 | |
| Cold Environment | 2a | 5.79E+03 | 4.51E+01 | 8.90E+01 | 5.88E+03 | |
| Cold Environment | 2b | 5.37E+03 | 4.51E+01 | 8.90E+01 | 5.46E+03 | |
| Minimum Ext. Press. | 3a | 6.87E+03 | 8.24E+01 | 1.43E+02 | 7.02E+03 | |
| Minimum Ext. Press. | 3b | 5.59E+03 | 8.24E+01 | 1.43E+02 | 5.73E+03 | |
| Increased Ext. Press. | 4a | 6.87E+03 | 2.73E+01 | 4.37E+01 | 6.92E+03 | |
| Increased Ext. Press. | 4b | 5.59E+03 | 2.73E+01 | 4.37E+01 | 5.63E+03 | |
| Vibration and Shock | 5a | 6.87E+03 | 1.13E+03 | 9.07E+02 | 7.78E+03 | 3.89E+03 |
| Vibration and Shock | 5b | 5.59E+03 | 1.13E+03 | 9.07E+02 | 6.49E+03 | 3.25E+03 |
| Vibration and Shock | 5c | 5.31E+03 | 1.13E+03 | 9.07E+02 | 6.22E+03 | 3.11E+03 |
| Free Drop - Top | 6a | 6.87E+03 | 8.63E+02 | 1.08E+03 | 7.95E+03 | |
| Free Drop - Top | 6b | 5.59E+03 | 8.63E+02 | 1.08E+03 | 6.67E+03 | |
| Free Drop - Top | 6c | 5.31E+03 | 8.63E+02 | 1.08E+03 | 6.39E+03 | |
| Free Drop - Side, 0 MER | 6a | 6.87E+03 | 3.61E+03 | 1.99E+03 | 8.86E+03 | |
| Free Drop - Side, 0 MER | 6b | 5.59E+03 | 3.61E+03 | 1.99E+03 | 7.58E+03 | |
| Free Drop - Side, 0 MER | 6c | 5.31E+03 | 3.61E+03 | 1.99E+03 | 7.30E+03 | |
| Free Drop - Side, 45 MER | 6a | 6.87E+03 | 3.14E+03 | 3.15E+03 | 1.00E+04 | |
| Free Drop - Side, 45 MER | 6b | 5.59E+03 | 3.14E+03 | 3.15E+03 | 8.74E+03 | |
| Free Drop - Side, 45 MER | 6c | 5.31E+03 | 3.14E+03 | 3.15E+03 | 8.46E+03 | |
| Maximum Stress Intensity | | 6.87E+03 | 3.61E+03 | 3.15E+03 | 1.00E+04 | |

NOTES:

1. Refer to Reference [2.2], corresponding Table 2.10.9.65.
2. $P_m < S_m = 18.7$ ksi
   $P_m + P_b < 1.5 \cdot S_m = 28.1$ ksi
   $P_m + P_b + Q < 3.0 \cdot S_m = 56.1$ ksi
3. See Table 2.32 for combination index identification.
4. For combinations with Salt not listed, the number of load cycles are few and therefore, the fatigue qualifications are met.
5. MER = Meridian, angle of orientation from the contact edge where stresses are given.

**Table 2.130. Summary of Stresses for Load Combinations Normal Conditions of Transport, Stress Point 15b (0.50 in. Wall Toroid)**

| Load Combination | Comb Index | Stress Intensity (psi) | | | | Fatigue Salt |
|---|---|---|---|---|---|---|
| | | Q | $P_m$ | $P_m + P_b$ | $P_m + P_b + Q$ | |
| Hot Environment | 1 | 3.27E+03 | 4.51E+01 | 1.25E+01 | 3.28E+03 | |
| Cold Environment | 2a | 8.73E+03 | 4.51E+01 | 1.25E+01 | 8.74E+03 | |
| Cold Environment | 2b | 4.91E+03 | 4.51E+01 | 1.25E+01 | 4.92E+03 | |
| Minimum Ext. Press. | 3a | 3.27E+03 | 8.24E+01 | 2.50E+01 | 3.29E+03 | |
| Minimum Ext. Press. | 3b | 9.33E+03 | 8.24E+01 | 2.50E+01 | 9.35E+03 | |
| Increased Ext. Press. | 4a | 3.27E+03 | 2.73E+01 | 1.09E+01 | 3.28E+03 | |
| Increased Ext. Press. | 4b | 9.33E+03 | 2.73E+01 | 1.09E+01 | 9.34E+03 | |
| Vibration and Shock | 5a | 3.27E+03 | 1.13E+03 | 1.85E+03 | 5.12E+03 | 2.56E+03 |
| Vibration and Shock | 5b | 9.33E+03 | 1.13E+03 | 1.85E+03 | 1.12E+04 | 5.59E+03 |
| Vibration and Shock | 5c | 4.89E+03 | 1.13E+03 | 1.85E+03 | 6.74E+03 | 3.37E+03 |
| Free Drop - Top | 6a | 3.27E+03 | 8.63E+02 | 1.23E+03 | 4.50E+03 | |
| Free Drop - Top | 6b | 9.33E+03 | 8.63E+02 | 1.23E+03 | 1.06E+04 | |
| Free Drop - Top | 6c | 4.89E+03 | 8.63E+02 | 1.23E+03 | 6.12E+03 | |
| Free Drop - Side, 0 MER | 6a | 3.27E+03 | 3.61E+03 | 6.69E+03 | 9.96E+03 | |
| Free Drop - Side, 0 MER | 6b | 9.33E+03 | 3.61E+03 | 6.69E+03 | 1.60E+04 | |
| Free Drop - Side, 0 MER | 6c | 4.89E+03 | 3.61E+03 | 6.69E+03 | 1.16E+04 | |
| Free Drop - Side, 45 MER | 6a | 3.27E+03 | 3.14E+03 | 3.29E+03 | 6.56E+03 | |
| Free Drop - Side, 45 MER | 6b | 9.33E+03 | 3.14E+03 | 3.29E+03 | 1.26E+04 | |
| Free Drop - Side, 45 MER | 6c | 4.89E+03 | 3.14E+03 | 3.29E+03 | 8.18E+03 | |
| Maximum Stress Intensity | | 9.33E+03 | 3.61E+03 | 6.69E+03 | 1.60E+04 | |

NOTES:

1. Refer to Reference [2.2], corresponding Table 2.10.9.66.
2. $P_m < S_m = 18.7$ ksi
   $P_m + P_b < 1.5 \cdot S_m = 28.1$ ksi
   $P_m + P_b + Q < 3.0 \cdot S_m = 56.1$ ksi
3. See Table 2.32 for combination index identification.
4. For combinations with Salt not listed, the number of load cycles are few and therefore, the fatigue qualifications are met.
5. MER = Meridian, angle of orientation from the contact edge where stresses are given.

**Table 2.131. Summary of Stresses for Load Combinations Normal Conditions of Transport, Stress Point 16a (0.50 in. Wall Toroid)**

| Load Combination | Comb Index | Stress Intensity (psi) | | | | Fatigue Salt |
|---|---|---|---|---|---|---|
| | | Q | $P_m$ | $P_m + P_b$ | $P_m + P_b + Q$ | |
| Hot Environment | 1 | 1.64E+04 | 3.42E+01 | 6.34E+01 | 1.65E+04 | |
| Cold Environment | 2a | 4.98E+03 | 3.42E+01 | 6.34E+01 | 5.04E+03 | |
| Cold Environment | 2b | 3.21E+03 | 3.42E+01 | 6.34E+01 | 3.28E+03 | |
| Minimum Ext. Press. | 3a | 1.64E+04 | 6.80E+01 | 1.28E+02 | 1.66E+04 | |
| Minimum Ext. Press. | 3b | 5.29E+03 | 6.80E+01 | 1.28E+02 | 5.42E+03 | |
| Increased Ext. Press. | 4a | 1.64E+04 | 1.81E+01 | 2.59E+01 | 1.65E+04 | |
| Increased Ext. Press. | 4b | 5.29E+03 | 1.81E+01 | 2.59E+01 | 5.32E+03 | |
| Vibration and Shock | 5a | 1.64E+04 | 7.37E+02 | 7.38E+02 | 1.72E+04 | 8.58E+03 |
| Vibration and Shock | 5b | 5.29E+03 | 7.37E+02 | 7.38E+02 | 6.03E+03 | 3.02E+03 |
| Vibration and Shock | 5c | 2.60E+03 | 7.37E+02 | 7.38E+02 | 3.34E+03 | 1.67E+03 |
| Free Drop - Top | 6a | 1.64E+04 | 1.16E+03 | 8.85E+02 | 1.73E+04 | |
| Free Drop - Top | 6b | 5.29E+03 | 1.16E+03 | 8.85E+02 | 6.18E+03 | |
| Free Drop - Top | 6c | 2.60E+03 | 1.16E+03 | 8.85E+02 | 3.49E+03 | |
| Free Drop - Side, 0 MER | 6a | 1.64E+04 | 7.13E+02 | 2.10E+03 | 1.85E+04 | |
| Free Drop - Side, 0 MER | 6b | 5.29E+03 | 7.13E+02 | 2.10E+03 | 7.39E+03 | |
| Free Drop - Side, 0 MER | 6c | 2.60E+03 | 7.13E+02 | 2.10E+03 | 4.70E+03 | |
| Free Drop - Side, 45 MER | 6a | 1.64E+04 | 1.76E+03 | 1.98E+03 | 1.84E+04 | |
| Free Drop - Side, 45 MER | 6b | 5.29E+03 | 1.76E+03 | 1.98E+03 | 7.27E+03 | |
| Free Drop - Side, 45 MER | 6c | 2.60E+03 | 1.76E+03 | 1.98E+03 | 4.58E+03 | |
| Maximum Stress Intensity | | 1.64E+04 | 1.76E+03 | 2.10E+03 | 1.85E+04 | |

NOTES:

1. Refer to Reference [2.2], corresponding Table 2.10.9.67.
2. $P_m < S_m = 18.7$ ksi
   $P_m + P_b < 1.5 \cdot S_m = 28.1$ ksi
   $P_m + P_b + Q < 3.0 \cdot S_m = 56.1$ ksi
3. See Table 2.32 for combination index identification.
4. For combinations with Salt not listed, the number of load cycles are few and therefore, the fatigue qualifications are met.
5. MER = Meridian, angle of orientation from the contact edge where stresses are given.

**Table 2.132. Summary of Stresses for Load Combinations Normal Conditions of Transport, Stress Point 16b (0.50 in. Wall Toroid)**

| Load Combination | Comb Index | Stress Intensity (psi) | | | | Fatigue Salt |
|---|---|---|---|---|---|---|
| | | Q | $P_m$ | $P_m + P_b$ | $P_m + P_b + Q$ | |
| Hot Environment | 1 | 2.59E+03 | 3.42E+01 | 6.92E+00 | 2.60E+03 | |
| Cold Environment | 2a | 1.32E+03 | 3.42E+01 | 6.92E+00 | 1.33E+03 | |
| Cold Environment | 2b | 1.79E+03 | 3.42E+01 | 6.92E+00 | 1.80E+03 | |
| Minimum Ext. Press. | 3a | 2.59E+03 | 6.80E+01 | 1.61E+01 | 2.61E+03 | |
| Minimum Ext. Press. | 3b | 1.34E+03 | 6.80E+01 | 1.61E+01 | 1.35E+03 | |
| Increased Ext. Press. | 4a | 2.59E+03 | 1.81E+01 | 1.02E+01 | 2.60E+03 | |
| Increased Ext. Press. | 4b | 1.34E+03 | 1.81E+01 | 1.02E+01 | 1.35E+03 | |
| Vibration and Shock | 5a | 2.59E+03 | 7.37E+02 | 1.22E+03 | 3.81E+03 | 1.91E+03 |
| Vibration and Shock | 5b | 1.34E+03 | 7.37E+02 | 1.22E+03 | 2.56E+03 | 1.28E+03 |
| Vibration and Shock | 5c | 1.43E+03 | 7.37E+02 | 1.22E+03 | 2.65E+03 | 1.33E+03 |
| Free Drop - Top | 6a | 2.59E+03 | 1.16E+03 | 2.06E+03 | 4.65E+03 | |
| Free Drop - Top | 6b | 1.34E+03 | 1.16E+03 | 2.06E+03 | 3.40E+03 | |
| Free Drop - Top | 6c | 1.43E+03 | 1.16E+03 | 2.06E+03 | 3.49E+03 | |
| Free Drop - Side, 0 MER | 6a | 2.59E+03 | 7.13E+02 | 1.07E+03 | 3.66E+03 | |
| Free Drop - Side, 0 MER | 6b | 1.34E+03 | 7.13E+02 | 1.07E+03 | 2.41E+03 | |
| Free Drop - Side, 0 MER | 6c | 1.43E+03 | 7.13E+02 | 1.07E+03 | 2.50E+03 | |
| Free Drop - Side, 45 MER | 6a | 2.59E+03 | 1.76E+03 | 1.41E+03 | 4.00E+03 | |
| Free Drop - Side, 45 MER | 6b | 1.34E+03 | 1.76E+03 | 1.41E+03 | 2.75E+03 | |
| Free Drop - Side, 45 MER | 6c | 1.43E+03 | 1.76E+03 | 1.41E+03 | 2.84E+03 | |
| Maximum Stress Intensity | | 2.59E+03 | 1.76E+03 | 2.06E+03 | 4.65E+03 | |

NOTES:

1. Refer to Reference [2.2], corresponding Table 2.10.9.68.
2. $P_m < S_m = 18.7$ ksi
   $P_m + P_b < 1.5 \cdot S_m = 28.1$ ksi
   $P_m + P_b + Q < 3.0 \cdot S_m = 56.1$ ksi
3. See Table 2.32 for combination index identification.
4. For combinations with Salt not listed, the number of load cycles are few and therefore, the fatigue qualifications are met.
5. MER = Meridian, angle of orientation from the contact edge where stresses are given.
6. Stresses are given at the centroid of the element, therefore, the same stress value is used for $P_m$ and $P_m + P_b$.

**Table 2.133. Summary of Stresses for Load Combinations Normal Conditions of Transport, Stress Point 17 (0.50 in. Wall Toroid)**

| Load Combination | Comb Index | Stress Intensity (psi) | | | | Fatigue Salt |
|---|---|---|---|---|---|---|
| | | Q | $P_m$ | $P_m + P_b$ | $P_m + P_b + Q$ | |
| Hot Environment | 1 | 1.66E+03 | 7.28E+01 | 7.28E+01 | 1.73E+03 | |
| Cold Environment | 2a | 9.28E+02 | 7.28E+01 | 7.28E+01 | 1.00E+03 | |
| Cold Environment | 2b | 4.38E+02 | 7.28E+01 | 7.28E+01 | 5.11E+02 | |
| Minimum Ext. Press. | 3a | 1.66E+03 | 1.44E+02 | 1.44E+02 | 1.80E+03 | |
| Minimum Ext. Press. | 3b | 9.36E+02 | 1.44E+02 | 1.44E+02 | 1.08E+03 | |
| Increased Ext. Press. | 4a | 1.66E+03 | 1.34E+01 | 1.34E+01 | 1.67E+03 | |
| Increased Ext. Press. | 4b | 9.36E+02 | 1.34E+01 | 1.34E+01 | 9.49E+02 | |
| Vibration and Shock | 5a | 1.66E+03 | 8.31E+02 | 8.31E+02 | 2.49E+03 | 1.24E+03 |
| Vibration and Shock | 5b | 9.36E+02 | 8.31E+02 | 8.31E+02 | 1.77E+03 | 8.83E+02 |
| Vibration and Shock | 5c | 3.42E+02 | 8.31E+02 | 8.31E+02 | 1.17E+03 | 5.87E+02 |
| Free Drop - Top | 6a | 1.66E+03 | 1.42E+03 | 1.42E+03 | 3.08E+03 | |
| Free Drop - Top | 6b | 9.36E+02 | 1.42E+03 | 1.42E+03 | 2.36E+03 | |
| Free Drop - Top | 6c | 3.42E+02 | 1.42E+03 | 1.42E+03 | 1.76E+03 | |
| Free Drop - Side, 0 MER | 6a | 1.66E+03 | 6.34E+02 | 6.34E+02 | 2.29E+03 | |
| Free Drop - Side, 0 MER | 6b | 9.36E+02 | 6.34E+02 | 6.34E+02 | 1.57E+03 | |
| Free Drop - Side, 0 MER | 6c | 3.42E+02 | 6.34E+02 | 6.34E+02 | 9.76E+02 | |
| Free Drop - Side, 45 MER | 6a | 1.66E+03 | 6.84E+02 | 6.84E+02 | 2.34E+03 | |
| Free Drop - Side, 45 MER | 6b | 9.36E+02 | 6.84E+02 | 6.84E+02 | 1.62E+03 | |
| Free Drop - Side, 45 MER | 6c | 3.42E+02 | 6.84E+02 | 6.84E+02 | 1.03E+03 | |
| Maximum Stress Intensity | | 1.66E+03 | 1.42E+03 | 1.42E+03 | 3.08E+03 | |

NOTES:

1. Refer to Reference [2.2], corresponding Table 2.10.9.69.
2. $P_m < S_m = 18.7$ ksi
   $P_m + P_b < 1.5 \cdot S_m = 28.1$ ksi
   $P_m + P_b + Q < 3.0 \cdot S_m = 56.1$ ksi
3. See Table 2.32 for combination index identification.
4. For combinations with Salt not listed, the number of load cycles are few and therefore, the fatigue qualifications are met.
5. MER = Meridian, angle of orientation from the contact edge where stresses are given.

**Table 2.134. Summary of Stresses for Load Combinations Normal Conditions of Transport, Stress Point 18 (0.50 in. Wall Toroid)**

| Load Combination | Comb Index | Stress Intensity (psi) | | | | Fatigue Salt |
|---|---|---|---|---|---|---|
| | | Q | $P_m$ | $P_m + P_b$ | $P_m + P_b + Q$ | |
| Hot Environment | 1 | 1.63E+03 | 1.27E+01 | 1.27E+01 | 1.64E+03 | |
| Cold Environment | 2a | 1.60E+03 | 1.27E+01 | 1.27E+01 | 1.61E+03 | |
| Cold Environment | 2b | 1.27E+02 | 1.27E+01 | 1.27E+01 | 1.40E+02 | |
| Minimum Ext. Press. | 3a | 1.63E+03 | 2.07E+01 | 2.07E+01 | 1.65E+03 | |
| Minimum Ext. Press. | 3b | 1.58E+03 | 2.07E+01 | 2.07E+01 | 1.60E+03 | |
| Increased Ext. Press. | 4a | 1.63E+03 | 1.79E+01 | 1.79E+01 | 1.65E+03 | |
| Increased Ext. Press. | 4b | 1.58E+03 | 1.79E+01 | 1.79E+01 | 1.60E+03 | |
| Vibration and Shock | 5a | 1.63E+03 | 1.29E+03 | 1.29E+03 | 2.92E+03 | 1.46E+03 |
| Vibration and Shock | 5b | 1.58E+03 | 1.29E+03 | 1.29E+03 | 2.87E+03 | 1.43E+03 |
| Vibration and Shock | 5c | 1.57E+02 | 1.29E+03 | 1.29E+03 | 1.45E+03 | 7.24E+02 |
| Free Drop - Top | 6a | 1.63E+03 | 2.27E+03 | 2.27E+03 | 3.90E+03 | |
| Free Drop - Top | 6b | 1.58E+03 | 2.27E+03 | 2.27E+03 | 3.85E+03 | |
| Free Drop - Top | 6c | 1.57E+02 | 2.27E+03 | 2.27E+03 | 2.43E+03 | |
| Free Drop - Side, 0 MER | 6a | 1.63E+03 | 9.47E+02 | 9.47E+02 | 2.57E+03 | |
| Free Drop - Side, 0 MER | 6b | 1.58E+03 | 9.47E+02 | 9.47E+02 | 2.53E+03 | |
| Free Drop - Side, 0 MER | 6c | 1.57E+02 | 9.47E+02 | 9.47E+02 | 1.10E+03 | |
| Free Drop - Side, 45 MER | 6a | 1.63E+03 | 1.92E+02 | 1.92E+02 | 1.82E+03 | |
| Free Drop - Side, 45 MER | 6b | 1.58E+03 | 1.92E+02 | 1.92E+02 | 1.77E+03 | |
| Free Drop - Side, 45 MER | 6c | 1.57E+02 | 1.92E+02 | 1.92E+02 | 3.49E+02 | |
| Maximum Stress Intensity | | 1.63E+03 | 2.27E+03 | 2.27E+03 | 3.90E+03 | |

NOTES:

1. Refer to Reference [2.2], corresponding Table 2.10.9.70.
2. $P_m < S_m = 18.7$ ksi
   $P_m + P_b < 1.5 \cdot S_m = 28.1$ ksi
   $P_m + P_b + Q < 3.0 \cdot S_m = 56.1$ ksi
3. See Table 2.32 for combination index identification.
4. For combinations with Salt not listed, the number of load cycles are few and therefore, the fatigue qualifications are met.
5. MER = Meridian, angle of orientation from the contact edge where stresses are given.
6. Stresses are given at the centroid of the element, therefore, the same stress value is used for $P_m$ and $P_m + P_b$.

**Table 2.135. Summary of Stresses for Load Combinations Normal Conditions of Transport, Stress Point 19 (0.50 in. Wall Toroid)**

| Load Combination | Comb Index | Stress Intensity (psi) | | | | Fatigue Salt |
|---|---|---|---|---|---|---|
| | | Q | $P_m$ | $P_m + P_b$ | $P_m + P_b + Q$ | |
| Hot Environment | 1 | 2.88E+03 | 1.45E+01 | 1.45E+01 | 2.89E+03 | |
| Cold Environment | 2a | 3.43E+03 | 1.45E+01 | 1.45E+01 | 3.45E+03 | |
| Cold Environment | 2b | 2.18E+01 | 1.45E+01 | 1.45E+01 | 3.63E+01 | |
| Minimum Ext. Press. | 3a | 2.88E+03 | 3.59E+01 | 3.59E+01 | 2.91E+03 | |
| Minimum Ext. Press. | 3b | 3.35E+03 | 3.59E+01 | 3.59E+01 | 3.39E+03 | |
| Increased Ext. Press. | 4a | 2.88E+03 | 3.34E+01 | 3.34E+01 | 2.91E+03 | |
| Increased Ext. Press. | 4b | 3.35E+03 | 3.34E+01 | 3.34E+01 | 3.39E+03 | |
| Vibration and Shock | 5a | 2.88E+03 | 1.72E+03 | 1.72E+03 | 4.60E+03 | 2.30E+03 |
| Vibration and Shock | 5b | 3.35E+03 | 1.72E+03 | 1.72E+03 | 5.07E+03 | 2.54E+03 |
| Vibration and Shock | 5c | 4.29E+01 | 1.72E+03 | 1.72E+03 | 1.76E+03 | 8.81E+02 |
| Free Drop - Top | 6a | 2.88E+03 | 3.12E+03 | 3.12E+03 | 6.00E+03 | |
| Free Drop - Top | 6b | 3.35E+03 | 3.12E+03 | 3.12E+03 | 6.47E+03 | |
| Free Drop - Top | 6c | 4.29E+01 | 3.12E+03 | 3.12E+03 | 3.16E+03 | |
| Free Drop - Side, 0 MER | 6a | 2.88E+03 | 2.59E+02 | 2.59E+02 | 3.14E+03 | |
| Free Drop - Side, 0 MER | 6b | 3.35E+03 | 2.59E+02 | 2.59E+02 | 3.61E+03 | |
| Free Drop - Side, 0 MER | 6c | 4.29E+01 | 2.59E+02 | 2.59E+02 | 3.02E+02 | |
| Free Drop - Side, 45 MER | 6a | 2.88E+03 | 2.02E+02 | 2.02E+02 | 3.08E+03 | |
| Free Drop - Side, 45 MER | 6b | 3.35E+03 | 2.02E+02 | 2.02E+02 | 3.55E+03 | |
| Free Drop - Side, 45 MER | 6c | 4.29E+01 | 2.02E+02 | 2.02E+02 | 2.45E+02 | |
| Maximum Stress Intensity | | 3.43E+03 | 3.12E+03 | 3.12E+03 | 6.47E+03 | |

NOTES:

1. Refer to Reference [2.2], corresponding Table 2.10.9.71.
2. $P_m < S_m = 18.7$ ksi
   $P_m + P_b < 1.5 \cdot S_m = 28.1$ ksi
   $P_m + P_b + Q < 3.0 \cdot S_m = 56.1$ ksi
3. See Table 2.32 for combination index identification.
4. For combinations with Salt not listed, the number of load cycles are few and therefore, the fatigue qualifications are met.
5. MER = Meridian, angle of orientation from the contact edge where stresses are given.
6. Stresses are given at the centroid of the element, therefore, the same stress value is used for $P_m$ and $P_m + P_b$.

**Table 2.136. Summary of Stresses for Load Combinations Normal Conditions of Transport, Stress Point 20 (0.50 in. Wall Toroid)**

| Load Combination | Comb Index | Stress Intensity (psi) | | | | Fatigue Salt |
|---|---|---|---|---|---|---|
| | | Q | $P_m$ | $P_m + P_b$ | $P_m + P_b + Q$ | |
| Hot Environment | 1 | 3.00E+03 | 8.74E+00 | 8.74E+00 | 3.01E+03 | |
| Cold Environment | 2a | 3.60E+03 | 8.74E+00 | 8.74E+00 | 3.61E+03 | |
| Cold Environment | 2b | 2.14E+01 | 8.74E+00 | 8.74E+00 | 3.02E+01 | |
| Minimum Ext. Press. | 3a | 3.00E+03 | 3.65E+01 | 3.65E+01 | 3.04E+03 | |
| Minimum Ext. Press. | 3b | 3.51E+03 | 3.65E+01 | 3.65E+01 | 3.55E+03 | |
| Increased Ext. Press. | 4a | 3.00E+03 | 4.26E+01 | 4.26E+01 | 3.04E+03 | |
| Increased Ext. Press. | 4b | 3.51E+03 | 4.26E+01 | 4.26E+01 | 3.56E+03 | |
| Vibration and Shock | 5a | 3.00E+03 | 9.83E+02 | 9.83E+02 | 3.98E+03 | 1.99E+03 |
| Vibration and Shock | 5b | 3.51E+03 | 9.83E+02 | 9.83E+02 | 4.50E+03 | 2.25E+03 |
| Vibration and Shock | 5c | 4.34E+01 | 9.83E+02 | 9.83E+02 | 1.03E+03 | 5.13E+02 |
| Free Drop - Top | 6a | 3.00E+03 | 1.80E+03 | 1.80E+03 | 4.80E+03 | |
| Free Drop - Top | 6b | 3.51E+03 | 1.80E+03 | 1.80E+03 | 5.31E+03 | |
| Free Drop - Top | 6c | 4.34E+01 | 1.80E+03 | 1.80E+03 | 1.84E+03 | |
| Free Drop - Side, 0 MER | 6a | 3.00E+03 | 1.08E+02 | 1.08E+02 | 3.11E+03 | |
| Free Drop - Side, 0 MER | 6b | 3.51E+03 | 1.08E+02 | 1.08E+02 | 3.62E+03 | |
| Free Drop - Side, 0 MER | 6c | 4.34E+01 | 1.08E+02 | 1.08E+02 | 1.51E+02 | |
| Free Drop - Side, 45 MER | 6a | 3.00E+03 | 1.00E+02 | 1.00E+02 | 3.10E+03 | |
| Free Drop - Side, 45 MER | 6b | 3.51E+03 | 1.00E+02 | 1.00E+02 | 3.61E+03 | |
| Free Drop - Side, 45 MER | 6c | 4.34E+01 | 1.00E+02 | 1.00E+02 | 1.43E+02 | |
| Maximum Stress Intensity | | 3.60E+03 | 1.80E+03 | 1.80E+03 | 5.31E+03 | |

NOTES:

1. Refer to Reference [2.2], corresponding Table 2.10.9.72.
2. $P_m < S_m = 18.7$ ksi
   $P_m + P_b < 1.5 \cdot S_m = 28.1$ ksi
   $P_m + P_b + Q < 3.0 \cdot S_m = 56.1$ ksi
3. See Table 2.32 for combination index identification.
4. For combinations with Salt not listed, the number of load cycles are few and therefore, the fatigue qualifications are met.
5. MER = Meridian, angle of orientation from the contact edge where stresses are given.
6. Stresses are given at the centroid of the element, therefore, the same stress value is used for $P_m$ and $P_m + P_b$.

**Table 2.137. Summary of Stresses for Load Combinations Normal Conditions of Transport, Stress Point 21 (0.50 in. Wall Toroid)**

| Load Combination | Comb Index | Stress Intensity (psi) | | | | Fatigue Salt |
|---|---|---|---|---|---|---|
| | | Q | $P_m$ | $P_m + P_b$ | $P_m + P_b + Q$ | |
| Hot Environment | 1 | 1.87E+03 | 1.08E+02 | 1.08E+02 | 1.98E+03 | |
| Cold Environment | 2a | 5.29E+02 | 1.08E+02 | 1.08E+02 | 6.37E+02 | |
| Cold Environment | 2b | 8.67E+02 | 1.08E+02 | 1.08E+02 | 9.75E+02 | |
| Minimum Ext. Press. | 3a | 1.87E+03 | 1.01E+02 | 1.01E+02 | 1.97E+03 | |
| Minimum Ext. Press. | 3b | 4.30E+02 | 1.01E+02 | 1.01E+02 | 5.31E+02 | |
| Increased Ext. Press. | 4a | 1.87E+03 | 1.07E+01 | 1.07E+01 | 1.88E+03 | |
| Increased Ext. Press. | 4b | 4.30E+02 | 1.07E+01 | 1.07E+01 | 4.41E+02 | |
| Vibration and Shock | 5a | 1.87E+03 | 1.48E+02 | 1.48E+02 | 2.02E+03 | 1.01E+03 |
| Vibration and Shock | 5b | 4.30E+02 | 1.48E+02 | 1.48E+02 | 5.78E+02 | 2.89E+02 |
| Vibration and Shock | 5c | 5.42E+02 | 1.48E+02 | 1.48E+02 | 6.90E+02 | 3.45E+02 |
| Free Drop - Top | 6a | 1.87E+03 | 1.83E+02 | 1.83E+02 | 2.05E+03 | |
| Free Drop - Top | 6b | 4.30E+02 | 1.83E+02 | 1.83E+02 | 6.13E+02 | |
| Free Drop - Top | 6c | 5.42E+02 | 1.83E+02 | 1.83E+02 | 7.25E+02 | |
| Free Drop - Side, 0 MER | 6a | 1.87E+03 | 1.36E+02 | 1.36E+02 | 2.01E+03 | |
| Free Drop - Side, 0 MER | 6b | 4.30E+02 | 1.36E+02 | 1.36E+02 | 5.66E+02 | |
| Free Drop - Side, 0 MER | 6c | 5.42E+02 | 1.36E+02 | 1.36E+02 | 6.78E+02 | |
| Free Drop - Side, 45 MER | 6a | 1.87E+03 | 1.30E+02 | 1.30E+02 | 2.00E+03 | |
| Free Drop - Side, 45 MER | 6b | 4.30E+02 | 1.30E+02 | 1.30E+02 | 5.60E+02 | |
| Free Drop - Side, 45 MER | 6c | 5.42E+02 | 1.30E+02 | 1.30E+02 | 6.72E+02 | |
| Maximum Stress Intensity | | 1.87E+03 | 1.83E+02 | 1.83E+02 | 2.05E+03 | |

NOTES:

1. Refer to Reference [2.2], corresponding Table 2.10.9.73.
2. $P_m < S_m = 18.7$ ksi
   $P_m + P_b < 1.5 \cdot S_m = 28.1$ ksi
   $P_m + P_b + Q < 3.0 \cdot S_m = 56.1$ ksi
3. See Table 2.32 for combination index identification.
4. For combinations with Salt not listed, the number of load cycles are few and therefore, the fatigue qualifications are met.
5. MER = Meridian, angle of orientation from the contact edge where stresses are given.
6. Stresses are given at the centroid of the element, therefore, the same stress value is used for $P_m$ and $P_m + P_b$.

**Table 2.138. Summary of Stresses for Load Combinations Normal Conditions of Transport, Stress Point 22 (0.50 in. Wall Toroid)**

| Load Combination | Comb Index | Stress Intensity (psi) | | | | Fatigue Salt |
|---|---|---|---|---|---|---|
| | | Q | $P_m$ | $P_m + P_b$ | $P_m + P_b + Q$ | |
| Hot Environment | 1 | 5.55E+02 | 1.90E+02 | 1.90E+02 | 7.45E+02 | |
| Cold Environment | 2a | 8.56E+01 | 1.90E+02 | 1.90E+02 | 2.76E+02 | |
| Cold Environment | 2b | 3.51E+02 | 1.90E+02 | 1.90E+02 | 5.41E+02 | |
| Minimum Ext. Press. | 3a | 5.55E+02 | 1.78E+02 | 1.78E+02 | 7.33E+02 | |
| Minimum Ext. Press. | 3b | 1.47E+02 | 1.78E+02 | 1.78E+02 | 3.25E+02 | |
| Increased Ext. Press. | 4a | 5.55E+02 | 2.90E+01 | 2.90E+01 | 5.84E+02 | |
| Increased Ext. Press. | 4b | 1.47E+02 | 2.90E+01 | 2.90E+01 | 1.76E+02 | |
| Vibration and Shock | 5a | 5.55E+02 | 2.64E+02 | 2.64E+02 | 8.19E+02 | 4.10E+02 |
| Vibration and Shock | 5b | 1.47E+02 | 2.64E+02 | 2.64E+02 | 4.11E+02 | 2.05E+02 |
| Vibration and Shock | 5c | 8.03E+02 | 2.64E+02 | 2.64E+02 | 1.07E+03 | 5.33E+02 |
| Free Drop - Top | 6a | 5.55E+02 | 3.26E+02 | 3.26E+02 | 8.81E+02 | |
| Free Drop - Top | 6b | 1.47E+02 | 3.26E+02 | 3.26E+02 | 4.73E+02 | |
| Free Drop - Top | 6c | 8.03E+02 | 3.26E+02 | 3.26E+02 | 1.13E+03 | |
| Free Drop - Side, 0 MER | 6a | 5.55E+02 | 2.41E+02 | 2.41E+02 | 7.96E+02 | |
| Free Drop - Side, 0 MER | 6b | 1.47E+02 | 2.41E+02 | 2.41E+02 | 3.88E+02 | |
| Free Drop - Side, 0 MER | 6c | 8.03E+02 | 2.41E+02 | 2.41E+02 | 1.04E+03 | |
| Free Drop - Side, 45 MER | 6a | 5.55E+02 | 2.15E+02 | 2.15E+02 | 7.70E+02 | |
| Free Drop - Side, 45 MER | 6b | 1.47E+02 | 2.15E+02 | 2.15E+02 | 3.62E+02 | |
| Free Drop - Side, 45 MER | 6c | 8.03E+02 | 2.15E+02 | 2.15E+02 | 1.02E+03 | |
| Maximum Stress Intensity | | 8.03E+02 | 3.26E+03 | 3.26E+03 | 1.13E+03 | |

NOTES:

1. Refer to Reference [2.2], corresponding Table 2.10.9.74.
2. $P_m < S_m = 18.7$ ksi
   $P_m + P_b < 1.5 \cdot S_m = 28.1$ ksi
   $P_m + P_b + Q < 3.0 \cdot S_m = 56.1$ ksi
3. See Table 2.32 for combination index identification.
4. For combinations with Salt not listed, the number of load cycles are few and therefore, the fatigue qualifications are met.
5. MER = Meridian, angle of orientation from the contact edge where stresses are given.
6. Stresses are given at the centroid of the element, therefore, the same stress value is used for $P_m$ and $P_m + P_b$.

**Table 2.139. Summary of Stresses for Load Combinations Normal Conditions of Transport, Stress Point 23 (0.50 in. Wall Toroid)**

| Load Combination | Comb Index | Stress Intensity (psi) | | | | Fatigue Salt |
|---|---|---|---|---|---|---|
| | | Q | $P_m$ | $P_m + P_b$ | $P_m + P_b + Q$ | |
| Hot Environment | 1 | 1.42E+03 | 8.36E+00 | 8.36E+00 | 1.43E+03 | |
| Cold Environment | 2a | 6.55E+02 | 8.36E+00 | 8.36E+00 | 6.63E+02 | |
| Cold Environment | 2b | 1.81E+03 | 8.36E+00 | 8.36E+00 | 1.81E+03 | |
| Minimum Ext. Press. | 3a | 1.42E+03 | 3.51E+01 | 3.51E+01 | 1.46E+03 | |
| Minimum Ext. Press. | 3b | 5.78E+02 | 3.51E+01 | 3.51E+01 | 6.13E+02 | |
| Increased Ext. Press. | 4a | 1.42E+03 | 6.42E+00 | 6.42E+00 | 1.43E+03 | |
| Increased Ext. Press. | 4b | 5.78E+02 | 6.42E+00 | 6.42E+00 | 5.84E+02 | |
| Vibration and Shock | 5a | 1.42E+03 | 8.94E+01 | 8.94E+01 | 1.51E+03 | 7.57E+02 |
| Vibration and Shock | 5b | 5.78E+02 | 8.94E+01 | 8.94E+01 | 6.67E+02 | 3.34E+02 |
| Vibration and Shock | 5c | 1.73E+03 | 8.94E+01 | 8.94E+01 | 1.82E+03 | 9.11E+02 |
| Free Drop - Top | 6a | 1.42E+03 | 1.57E+02 | 1.57E+02 | 1.58E+03 | |
| Free Drop - Top | 6b | 5.78E+02 | 1.57E+02 | 1.57E+02 | 7.35E+02 | |
| Free Drop - Top | 6c | 1.73E+03 | 1.57E+02 | 1.57E+02 | 1.89E+03 | |
| Free Drop - Side, 0 MER | 6a | 1.42E+03 | 3.55E+01 | 3.55E+01 | 1.46E+03 | |
| Free Drop - Side, 0 MER | 6b | 5.78E+02 | 3.55E+01 | 3.55E+01 | 6.13E+02 | |
| Free Drop - Side, 0 MER | 6c | 1.73E+03 | 3.55E+01 | 3.55E+01 | 1.77E+03 | |
| Free Drop - Side, 45 MER | 6a | 1.42E+03 | 3.92E+01 | 3.92E+01 | 1.46E+03 | |
| Free Drop - Side, 45 MER | 6b | 5.78E+02 | 3.92E+01 | 3.92E+01 | 6.17E+02 | |
| Free Drop - Side, 45 MER | 6c | 1.73E+03 | 3.92E+01 | 3.92E+01 | 1.77E+03 | |
| Maximum Stress Intensity | | 1.81E+03 | 2.29E+02 | 2.29E+02 | 1.89E+03 | |

NOTES:

1. Refer to Reference [2.2], corresponding Table 2.10.9.75.
2. $P_m < S_m = 18.7$ ksi
   $P_m + P_b < 1.5 \cdot S_m = 28.1$ ksi
   $P_m + P_b + Q < 3.0 \cdot S_m = 56.1$ ksi
3. See Table 2.32 for combination index identification.
4. For combinations with Salt not listed, the number of load cycles are few and therefore, the fatigue qualifications are met.
5. MER = Meridian, angle of orientation from the contact edge where stresses are given.
6. Stresses are given at the centroid of the element, therefore, the same stress value is used for $P_m$ and $P_m + P_b$.

**Table 2.140. Summary of Stresses for Load Combinations Normal Conditions of Transport, Stress Point 24 (0.50 in. Wall Toroid)**

| Load Combination | Comb Index | Stress Intensity (psi) | | | | Fatigue Salt |
|---|---|---|---|---|---|---|
| | | Q | $P_m$ | $P_m + P_b$ | $P_m + P_b + Q$ | |
| Hot Environment | 1 | 4.36E+03 | 8.57E+01 | 8.57E+01 | 4.44E+03 | |
| Cold Environment | 2a | 3.73E+03 | 8.57E+01 | 8.57E+01 | 3.82E+03 | |
| Cold Environment | 2b | 3.27E+03 | 8.57E+01 | 8.57E+01 | 3.36E+03 | |
| Minimum Ext. Press. | 3a | 4.36E+03 | 1.24E+02 | 1.24E+02 | 4.48E+03 | |
| Minimum Ext. Press. | 3b | 3.44E+03 | 1.24E+02 | 1.24E+02 | 3.56E+03 | |
| Increased Ext. Press. | 4a | 4.36E+03 | 5.05E+01 | 5.05E+01 | 4.41E+03 | |
| Increased Ext. Press. | 4b | 3.44E+03 | 5.05E+01 | 5.05E+01 | 3.49E+03 | |
| Vibration and Shock | 5a | 4.36E+03 | 9.92E+02 | 9.92E+02 | 5.35E+03 | 2.67E+03 |
| Vibration and Shock | 5b | 3.44E+03 | 9.92E+02 | 9.92E+02 | 4.43E+03 | 2.21E+03 |
| Vibration and Shock | 5c | 3.30E+03 | 9.92E+02 | 9.92E+02 | 4.29E+03 | 2.15E+03 |
| Free Drop - Top | 6a | 4.36E+03 | 2.38E+03 | 2.38E+03 | 6.74E+03 | |
| Free Drop - Top | 6b | 3.44E+03 | 2.38E+03 | 2.38E+03 | 5.82E+03 | |
| Free Drop - Top | 6c | 3.30E+03 | 2.38E+03 | 2.38E+03 | 5.68E+03 | |
| Free Drop - Side, 0 MER | 6a | 4.36E+03 | 6.18E+02 | 6.18E+02 | 4.97E+03 | |
| Free Drop - Side, 0 MER | 6b | 3.44E+03 | 6.18E+02 | 6.18E+02 | 4.05E+03 | |
| Free Drop - Side, 0 MER | 6c | 3.30E+03 | 6.18E+02 | 6.18E+02 | 3.92E+03 | |
| Free Drop - Side, 45 MER | 6a | 4.36E+03 | 5.37E+02 | 5.37E+02 | 4.89E+03 | |
| Free Drop - Side, 45 MER | 6b | 3.44E+03 | 5.37E+02 | 5.37E+02 | 3.97E+03 | |
| Free Drop - Side, 45 MER | 6c | 3.30E+03 | 5.37E+02 | 5.37E+02 | 3.84E+03 | |
| Maximum Stress Intensity | | 4.36E+03 | 2.38E+03 | 2.38E+03 | 6.74E+03 | |

NOTES:

1. Refer to Reference [2.2], corresponding Table 2.10.9.76.
2. $P_m < S_m = 18.7$ ksi
   $P_m + P_b < 1.5 \cdot S_m = 28.1$ ksi
   $P_m + P_b + Q < 3.0 \cdot S_m = 56.1$ ksi
3. See Table 2.32 for combination index identification.
4. For combinations with Salt not listed, the number of load cycles are few and therefore, the fatigue qualifications are met.
5. MER = Meridian, angle of orientation from the contact edge where stresses are given.
6. Stresses are given at the centroid of the element, therefore, the same stress value is used for $P_m$ and $P_m + P_b$.

**Table 2.141. Summary of Stresses for Load Combinations Normal Conditions of Transport, Stress Point 25 (0.50 in. Wall Toroid)**

| Load Combination | Comb Index | Stress Intensity (psi) | | | | Fatigue Salt |
|---|---|---|---|---|---|---|
| | | Q | $P_m$ | $P_m + P_b$ | $P_m + P_b + Q$ | |
| Hot Environment | 1 | 5.69E+03 | 5.73E+01 | 5.73E+01 | 5.75E+03 | |
| Cold Environment | 2a | 4.31E+03 | 5.73E+01 | 5.73E+01 | 4.37E+03 | |
| Cold Environment | 2b | 4.79E+03 | 5.73E+01 | 5.73E+01 | 4.84E+03 | |
| Minimum Ext. Press. | 3a | 5.69E+03 | 1.01E+02 | 1.01E+02 | 5.79E+03 | |
| Minimum Ext. Press. | 3b | 4.23E+03 | 1.01E+02 | 1.01E+02 | 4.33E+03 | |
| Increased Ext. Press. | 4a | 5.69E+03 | 6.27E+01 | 6.27E+01 | 5.75E+03 | |
| Increased Ext. Press. | 4b | 4.23E+03 | 6.27E+01 | 6.27E+01 | 4.29E+03 | |
| Vibration and Shock | 5a | 5.69E+03 | 1.33E+03 | 1.33E+03 | 7.02E+03 | 3.51E+03 |
| Vibration and Shock | 5b | 4.23E+03 | 1.33E+03 | 1.33E+03 | 5.56E+03 | 2.78E+03 |
| Vibration and Shock | 5c | 4.30E+03 | 1.33E+03 | 1.33E+03 | 5.63E+03 | 2.81E+03 |
| Free Drop - Top | 6a | 5.69E+03 | 1.08E+04 | 1.08E+04 | 1.65E+04 | |
| Free Drop - Top | 6b | 4.23E+03 | 1.08E+04 | 1.08E+04 | 1.50E+04 | |
| Free Drop - Top | 6c | 4.30E+03 | 1.08E+04 | 1.08E+04 | 1.51E+04 | |
| Free Drop - Side, 0 MER | 6a | 5.69E+03 | 3.35E+03 | 3.35E+03 | 9.04E+03 | |
| Free Drop - Side, 0 MER | 6b | 4.23E+03 | 3.35E+03 | 3.35E+03 | 7.58E+03 | |
| Free Drop - Side, 0 MER | 6c | 4.30E+03 | 3.35E+03 | 3.35E+03 | 7.65E+03 | |
| Free Drop - Side, 45 MER | 6a | 5.69E+03 | 6.96E+02 | 6.96E+02 | 6.39E+03 | |
| Free Drop - Side, 45 MER | 6b | 4.23E+03 | 6.96E+02 | 6.96E+02 | 4.92E+03 | |
| Free Drop - Side, 45 MER | 6c | 4.30E+03 | 6.96E+02 | 6.96E+02 | 4.99E+03 | |
| Maximum Stress Intensity | | 5.69E+03 | 1.08E+04 | 1.08E+04 | 1.65E+04 | |

NOTES:

1. Refer to Reference [2.2], corresponding Table 2.10.9.77.
2. $P_m < S_m = 18.7$ ksi
   $P_m + P_b < 1.5 \cdot S_m = 28.1$ ksi
   $P_m + P_b + Q < 3.0 \cdot S_m = 56.1$ ksi
3. See Table 2.32 for combination index identification.
4. For combinations with Salt not listed, the number of load cycles are few and therefore, the fatigue qualifications are met.
5. MER = Meridian, angle of orientation from the contact edge where stresses are given.
6. Stresses are given at the centroid of the element, therefore, the same stress value is used for $P_m$ and $P_m + P_b$.

**Table 2.142. Summary of Stresses for Load Combinations Normal Conditions of Transport, Stress Point 26 (0.50 in. Wall Toroid)**

| Load Combination | Comb Index | Stress Intensity (psi) | | | | Fatigue Salt |
|---|---|---|---|---|---|---|
| | | Q | $P_m$ | $P_m + P_b$ | $P_m + P_b + Q$ | |
| Hot Environment | 1 | 2.09E+03 | 3.85E+01 | 3.85E+01 | 2.13E+03 | |
| Cold Environment | 2a | 1.98E+03 | 3.85E+01 | 3.85E+01 | 2.02E+03 | |
| Cold Environment | 2b | 9.12E+02 | 3.85E+01 | 3.85E+01 | 9.51E+02 | |
| Minimum Ext. Press. | 3a | 2.09E+03 | 7.97E+01 | 7.97E+01 | 2.17E+03 | |
| Minimum Ext. Press. | 3b | 1.95E+03 | 7.97E+01 | 7.97E+01 | 2.03E+03 | |
| Increased Ext. Press. | 4a | 2.09E+03 | 3.10E+01 | 3.10E+01 | 2.12E+03 | |
| Increased Ext. Press. | 4b | 1.95E+03 | 3.10E+01 | 3.10E+01 | 1.98E+03 | |
| Vibration and Shock | 5a | 2.09E+03 | 7.19E+02 | 7.19E+02 | 2.81E+03 | 1.41E+03 |
| Vibration and Shock | 5b | 1.95E+03 | 7.19E+02 | 7.19E+02 | 2.67E+03 | 1.33E+03 |
| Vibration and Shock | 5c | 9.22E+02 | 7.19E+02 | 7.19E+02 | 1.64E+03 | 8.21E+02 |
| Free Drop - Top | 6a | 2.09E+03 | 9.90E+02 | 9.90E+02 | 3.08E+03 | |
| Free Drop - Top | 6b | 1.95E+03 | 9.90E+02 | 9.90E+02 | 2.94E+03 | |
| Free Drop - Top | 6c | 9.22E+02 | 9.90E+02 | 9.90E+02 | 1.91E+03 | |
| Free Drop - Side, 0 MER | 6a | 2.09E+03 | 1.27E+03 | 1.27E+03 | 3.36E+03 | |
| Free Drop - Side, 0 MER | 6b | 1.95E+03 | 1.27E+03 | 1.27E+03 | 3.22E+03 | |
| Free Drop - Side, 0 MER | 6c | 9.22E+02 | 1.27E+03 | 1.27E+03 | 2.19E+03 | |
| Free Drop - Side, 45 MER | 6a | 2.09E+03 | 5.22E+02 | 5.22E+02 | 2.61E+03 | |
| Free Drop - Side, 45 MER | 6b | 1.95E+03 | 5.22E+02 | 5.22E+02 | 2.47E+03 | |
| Free Drop - Side, 45 MER | 6c | 9.22E+02 | 5.22E+02 | 5.22E+02 | 1.44E+03 | |
| Maximum Stress Intensity | | 2.09E+03 | 1.27E+03 | 1.27E+03 | 3.36E+03 | |

NOTES:

1. Refer to Reference [2.2], corresponding Table 2.10.9.78.
2. $P_m < S_m = 18.7$ ksi
   $P_m + P_b < 1.5 \cdot S_m = 28.1$ ksi
   $P_m + P_b + Q < 3.0 \cdot S_m = 56.1$ ksi
3. See Table 2.32 for combination index identification.
4. For combinations with Salt not listed, the number of load cycles are few and therefore, the fatigue qualifications are met.
5. MER = Meridian, angle of orientation from the contact edge where stresses are given.
6. Stresses are given at the centroid of the element, therefore, the same stress value is used for $P_m$ and $P_m + P_b$.

**Table 2.143. Summary of Stresses for Load Combinations Normal Conditions of Transport, Stress Point 27 (0.50 in. Wall Toroid)**

| Load Combination | Comb Index | Stress Intensity (psi) | | | | Fatigue Salt |
|---|---|---|---|---|---|---|
| | | Q | $P_m$ | $P_m + P_b$ | $P_m + P_b + Q$ | |
| Hot Environment | 1 | 2.21E+03 | 6.98E+01 | 6.98E+01 | 2.28E+03 | |
| Cold Environment | 2a | 1.63E+03 | 6.98E+01 | 6.98E+01 | 1.70E+03 | |
| Cold Environment | 2b | 6.68E+02 | 6.98E+01 | 6.98E+01 | 7.38E+02 | |
| Minimum Ext. Press. | 3a | 2.21E+03 | 7.21E+01 | 7.21E+01 | 2.28E+03 | |
| Minimum Ext. Press. | 3b | 1.68E+03 | 7.21E+01 | 7.21E+01 | 1.76E+03 | |
| Increased Ext. Press. | 4a | 2.21E+03 | 2.22E+01 | 2.22E+01 | 2.23E+03 | |
| Increased Ext. Press. | 4b | 1.68E+03 | 2.22E+01 | 2.22E+01 | 1.71E+03 | |
| Vibration and Shock | 5a | 2.21E+03 | 5.84E+04 | 5.84E+04 | 2.79E+03 | 1.40E+03 |
| Vibration and Shock | 5b | 1.68E+03 | 5.84E+04 | 5.84E+04 | 2.27E+03 | 1.13E+03 |
| Vibration and Shock | 5c | 6.49E+02 | 5.84E+04 | 5.84E+04 | 1.23E+03 | 6.16E+02 |
| Free Drop - Top | 6a | 2.21E+03 | 5.69E+02 | 5.69E+02 | 2.78E+03 | |
| Free Drop - Top | 6b | 1.68E+03 | 5.69E+02 | 5.69E+02 | 2.25E+03 | |
| Free Drop - Top | 6c | 6.49E+02 | 5.69E+02 | 5.69E+02 | 1.22E+03 | |
| Free Drop - Side, 0 MER | 6a | 2.21E+03 | 1.41E+03 | 1.41E+03 | 3.62E+03 | |
| Free Drop - Side, 0 MER | 6b | 1.68E+03 | 1.41E+03 | 1.41E+03 | 3.09E+03 | |
| Free Drop - Side, 0 MER | 6c | 6.49E+02 | 1.41E+03 | 1.41E+03 | 2.06E+03 | |
| Free Drop - Side, 45 MER | 6a | 2.21E+03 | 5.78E+02 | 5.78E+02 | 2.79E+03 | |
| Free Drop - Side, 45 MER | 6b | 1.68E+03 | 5.78E+02 | 5.78E+02 | 2.26E+03 | |
| Free Drop - Side, 45 MER | 6c | 6.49E+02 | 5.78E+02 | 5.78E+02 | 1.23E+03 | |
| Maximum Stress Intensity | | 2.21E+03 | 1.41E+03 | 1.41E+03 | 3.62E+03 | |

NOTES:

1. Refer to Reference [2.2], corresponding Table 2.10.9.79.
2. $P_m < S_m = 18.7$ ksi
   $P_m + P_b < 1.5 \cdot S_m = 28.1$ ksi
   $P_m + P_b + Q < 3.0 \cdot S_m = 56.1$ ksi
3. See Table 2.32 for combination index identification.
4. For combinations with Salt not listed, the number of load cycles are few and therefore, the fatigue qualifications are met.
5. MER = Meridian, angle of orientation from the contact edge where stresses are given.
6. Stresses are given at the centroid of the element, therefore, the same stress value is used for $P_m$ and $P_m + P_b$.

**Table 2.144. Summary of Stresses for Load Combinations Accident Conditions of Transport, Stress Point 1 (0.50 in. Wall Toroid)**

| Load Combination | Combination Index | Stress Intensity (psi) | |
|---|---|---|---|
| | | $P_m$ | $P_m + P_b$ |
| Free Drop 30 Foot - Top | 7a | 6.32E+02 | 6.32E+02 |
| Free Drop 30 Foot - Top | 7b | 6.32E+02 | 6.32E+02 |
| Free Drop 30 Foot - Top | 7c | 6.32E+02 | 6.32E+02 |
| Free Drop 30 Foot - Bottom | 7a | 1.23E+03 | 1.23E+03 |
| Free Drop 30 Foot - Bottom | 7b | 1.23E+03 | 1.23E+03 |
| Free Drop 30 Foot - Bottom | 7c | 1.23E+03 | 1.23E+03 |
| Free Drop 30 Foot - Side | 7a | 3.43E+02 | 3.43E+02 |
| Free Drop 30 Foot - Side | 7b | 3.43E+02 | 3.43E+02 |
| Free Drop 30 Foot - Side | 7c | 3.43E+02 | 3.43E+02 |
| Free Drop 30 Foot - CG | 7a | 2.20E+01 | 2.20E+01 |
| Free Drop 30 Foot - CG | 7b | 2.20E+01 | 2.20E+01 |
| Free Drop 30 Foot - CG | 7c | 2.20E+01 | 2.20E+01 |
| Puncture | 8a | 3.43E+02 | 3.43E+02 |
| Puncture | 8b | 3.43E+02 | 3.43E+02 |
| Puncture | 8c | 3.43E+02 | 3.43E+02 |
| Thermal Fire - t = 0.5 Hr | 9 | 1.30E+01 | 1.30E+01 |
| Thermal Fire - t = 1.0 Hr | 9 | 1.30E+01 | 1.30E+01 |
| Thermal Fire - t = 1.5 Hr | 9 | 1.30E+01 | 1.30E+01 |
| Thermal Fire - t = 2.0 Hr | 9 | 1.30E+01 | 1.30E+01 |
| Thermal Fire - t = 2.5 Hr | 9 | 1.30E+01 | 1.30E+01 |
| Thermal Fire - t = 3.0 Hr | 9 | 1.30E+01 | 1.30E+01 |
| Maximum Stress Intensity | | 1.23E+03 | 1.23E+03 |

NOTES:

1. Refer to Reference [2.2], corresponding Table 2.10.9.80.
2. $P_m < 2.4 \cdot S_m$ or $0.7 \cdot S_u = 44.8$ ksi
   $P_m + P_b < 3.6 \cdot S_m$ or $1.0 \cdot S_u = 64.4$ ksi
3. See Table 2.32 for combination index identification.
4. Stresses are given at the centroid of the element, therefore, the same stress value is used for $P_m$ and $P_m + P_b$.

**Table 2.145. Summary of Stresses for Load Combinations Accident Conditions of Transport, Stress Point 2 (0.50 in. Wall Toroid)**

| Load Combination | Combination Index | Stress Intensity (psi) | |
|---|---|---|---|
| | | $P_m$ | $P_m + P_b$ |
| Free Drop 30 Foot - Top | 7a | 5.93E+02 | 5.93E+02 |
| Free Drop 30 Foot - Top | 7b | 5.93E+02 | 5.93E+02 |
| Free Drop 30 Foot - Top | 7c | 5.93E+02 | 5.93E+02 |
| Free Drop 30 Foot - Bottom | 7a | 1.20E+03 | 1.20E+03 |
| Free Drop 30 Foot - Bottom | 7b | 1.20E+03 | 1.20E+03 |
| Free Drop 30 Foot - Bottom | 7c | 1.20E+03 | 1.20E+03 |
| Free Drop 30 Foot - Side | 7a | 4.97E+02 | 4.97E+02 |
| Free Drop 30 Foot - Side | 7b | 4.97E+02 | 4.97E+02 |
| Free Drop 30 Foot - Side | 7c | 4.97E+02 | 4.97E+02 |
| Free Drop 30 Foot - CG | 7a | 4.16E+01 | 4.16E+01 |
| Free Drop 30 Foot - CG | 7b | 4.16E+01 | 4.16E+01 |
| Free Drop 30 Foot - CG | 7c | 4.16E+01 | 4.16E+01 |
| Puncture | 8a | 4.97E+02 | 4.97E+02 |
| Puncture | 8b | 4.97E+02 | 4.97E+02 |
| Puncture | 8c | 4.97E+02 | 4.97E+02 |
| Thermal Fire - t = 0.5 Hr | 9 | 1.37E+01 | 1.37E+01 |
| Thermal Fire - t = 1.0 Hr | 9 | 1.37E+01 | 1.37E+01 |
| Thermal Fire - t = 1.5 Hr | 9 | 1.37E+01 | 1.37E+01 |
| Thermal Fire - t = 2.0 Hr | 9 | 1.37E+01 | 1.37E+01 |
| Thermal Fire - t = 2.5 Hr | 9 | 1.37E+01 | 1.37E+01 |
| Thermal Fire - t = 3.0 Hr | 9 | 1.37E+01 | 1.37E+01 |
| Maximum Stress Intensity | | 1.20E+03 | 1.20E+03 |

NOTES:

1. Refer to Reference [2.2], corresponding Table 2.10.9.81.
2. $P_m < 2.4 \cdot S_m$ or $0.7 \cdot S_u = 44.8$ ksi
   $P_m + P_b < 3.6 \cdot S_m$ or $1.0 \cdot S_u = 64.4$ ksi
3. See Table 2.32 for combination index identification.
4. Stresses are given at the centroid of the element, therefore, the same stress value is used for $P_m$ and $P_m + P_b$.

**Table 2.146. Summary of Stresses for Load Combinations Accident Conditions of Transport, Stress Point 3 (0.50 in. Wall Toroid)**

| Load Combination | Combination Index | Stress Intensity (psi) | |
|---|---|---|---|
| | | $P_m$ | $P_m + P_b$ |
| Free Drop 30 Foot - Top | 7a | 5.01E+02 | 5.01E+02 |
| Free Drop 30 Foot - Top | 7b | 5.01E+02 | 5.01E+02 |
| Free Drop 30 Foot - Top | 7c | 5.01E+02 | 5.01E+02 |
| Free Drop 30 Foot - Bottom | 7a | 1.52E+03 | 1.52E+03 |
| Free Drop 30 Foot - Bottom | 7b | 1.52E+03 | 1.52E+03 |
| Free Drop 30 Foot - Bottom | 7c | 1.52E+03 | 1.52E+03 |
| Free Drop 30 Foot - Side | 7a | 1.32E+04 | 1.32E+04 |
| Free Drop 30 Foot - Side | 7b | 1.32E+04 | 1.32E+04 |
| Free Drop 30 Foot - Side | 7c | 1.32E+04 | 1.32E+04 |
| Free Drop 30 Foot - CG | 7a | 8.70E+02 | 8.70E+02 |
| Free Drop 30 Foot - CG | 7b | 8.70E+02 | 8.70E+02 |
| Free Drop 30 Foot - CG | 7c | 8.70E+02 | 8.70E+02 |
| Puncture | 8a | 1.32E+04 | 1.32E+04 |
| Puncture | 8b | 1.32E+04 | 1.32E+04 |
| Puncture | 8c | 1.32E+04 | 1.32E+04 |
| Thermal Fire - t = 0.5 Hr | 9 | 1.51E+01 | 1.51E+01 |
| Thermal Fire - t = 1.0 Hr | 9 | 1.51E+01 | 1.51E+01 |
| Thermal Fire - t = 1.5 Hr | 9 | 1.51E+01 | 1.51E+01 |
| Thermal Fire - t = 2.0 Hr | 9 | 1.51E+01 | 1.51E+01 |
| Thermal Fire - t = 2.5 Hr | 9 | 1.51E+01 | 1.51E+01 |
| Thermal Fire - t = 3.0 Hr | 9 | 1.51E+01 | 1.51E+01 |
| Maximum Stress Intensity | | 1.32E+04 | 1.32E+04 |

NOTES:

1. Refer to Reference [2.2], corresponding Table 2.10.9.82.
2. $P_m < 2.4 \cdot S_m$ or $0.7 \cdot S_u = 44.8$ ksi
   $P_m + P_b < 3.6 \cdot S_m$ or $1.0 \cdot S_u = 64.4$ ksi
3. See Table 2.32 for combination index identification.
4. Stresses are given at the centroid of the element, therefore, the same stress value is used for $P_m$ and $P_m + P_b$.

**Table 2.147. Summary of Stresses for Load Combinations Accident Conditions of Transport, Stress Point 4 (0.50 in. Wall Toroid)**

| Load Combination | Combination Index | Stress Intensity (psi) | |
|---|---|---|---|
| | | $P_m$ | $P_m + P_b$ |
| Free Drop 30 Foot - Top | 7a | 4.62E+02 | 4.62E+02 |
| Free Drop 30 Foot - Top | 7b | 4.62E+02 | 4.62E+02 |
| Free Drop 30 Foot - Top | 7c | 4.62E+02 | 4.62E+02 |
| Free Drop 30 Foot - Bottom | 7a | 1.35E+03 | 1.35E+03 |
| Free Drop 30 Foot - Bottom | 7b | 1.35E+03 | 1.35E+03 |
| Free Drop 30 Foot - Bottom | 7c | 1.35E+03 | 1.35E+03 |
| Free Drop 30 Foot - Side | 7a | 4.12E+03 | 4.12E+03 |
| Free Drop 30 Foot - Side | 7b | 4.12E+03 | 4.12E+03 |
| Free Drop 30 Foot - Side | 7c | 4.12E+03 | 4.12E+03 |
| Free Drop 30 Foot - CG | 7a | 1.00E+03 | 1.00E+03 |
| Free Drop 30 Foot - CG | 7b | 1.00E+03 | 1.00E+03 |
| Free Drop 30 Foot - CG | 7c | 1.00E+03 | 1.00E+03 |
| Puncture | 8a | 4.12E+03 | 4.12E+03 |
| Puncture | 8b | 4.12E+03 | 4.12E+03 |
| Puncture | 8c | 4.12E+03 | 4.12E+03 |
| Thermal Fire - t = 0.5 Hr | 9 | 1.76E+01 | 1.76E+01 |
| Thermal Fire - t = 1.0 Hr | 9 | 1.76E+01 | 1.76E+01 |
| Thermal Fire - t = 1.5 Hr | 9 | 1.76E+01 | 1.76E+01 |
| Thermal Fire - t = 2.0 Hr | 9 | 1.76E+01 | 1.76E+01 |
| Thermal Fire - t = 2.5 Hr | 9 | 1.76E+01 | 1.76E+01 |
| Thermal Fire - t = 3.0 Hr | 9 | 1.76E+01 | 1.76E+01 |
| Maximum Stress Intensity | | 4.12E+03 | 4.12E+03 |

NOTES:

1. Refer to Reference [2.2], corresponding Table 2.10.9.83.
2. $P_m < 2.4 \cdot S_m$ or $0.7 \cdot S_u = 44.8$ ksi
   $P_m + P_b < 3.6 \cdot S_m$ or $1.0 \cdot S_u = 64.4$ ksi
3. See Table 2.32 for combination index identification.
4. Stresses are given at the centroid of the element, therefore, the same stress value is used for $P_m$ and $P_m + P_b$.

**Table 2.148. Summary of Stresses for Load Combinations Accident Conditions of Transport, Stress Point 5 (0.50 in. Wall Toroid)**

| Load Combination | Combination Index | Stress Intensity (psi) | |
|---|---|---|---|
| | | $P_m$ | $P_m + P_b$ |
| Free Drop 30 Foot - Top | 7a | 1.10E+02 | 1.10E+02 |
| Free Drop 30 Foot - Top | 7b | 1.10E+02 | 1.10E+02 |
| Free Drop 30 Foot - Top | 7c | 1.10E+02 | 1.10E+02 |
| Free Drop 30 Foot - Bottom | 7a | 2.56E+03 | 2.56E+03 |
| Free Drop 30 Foot - Bottom | 7b | 2.56E+03 | 2.56E+03 |
| Free Drop 30 Foot - Bottom | 7c | 2.56E+03 | 2.56E+03 |
| Free Drop 30 Foot - Side | 7a | 2.28E+03 | 2.28E+03 |
| Free Drop 30 Foot - Side | 7b | 2.28E+03 | 2.28E+03 |
| Free Drop 30 Foot - Side | 7c | 2.28E+03 | 2.28E+03 |
| Free Drop 30 Foot - CG | 7a | 3.56E+02 | 3.56E+02 |
| Free Drop 30 Foot - CG | 7b | 3.56E+02 | 3.56E+02 |
| Free Drop 30 Foot - CG | 7c | 3.56E+02 | 3.56E+02 |
| Puncture | 8a | 2.28E+03 | 2.28E+03 |
| Puncture | 8b | 2.28E+03 | 2.28E+03 |
| Puncture | 8c | 2.28E+03 | 2.28E+03 |
| Thermal Fire - t = 0.5 Hr | 9 | 3.07E+00 | 3.07E+00 |
| Thermal Fire - t = 1.0 Hr | 9 | 3.07E+00 | 3.07E+00 |
| Thermal Fire - t = 1.5 Hr | 9 | 3.07E+00 | 3.07E+00 |
| Thermal Fire - t = 2.0 Hr | 9 | 3.07E+00 | 3.07E+00 |
| Thermal Fire - t = 2.5 Hr | 9 | 3.07E+00 | 3.07E+00 |
| Thermal Fire - t = 3.0 Hr | 9 | 3.07E+00 | 3.07E+00 |
| Maximum Stress Intensity | | 2.56E+03 | 2.56E+03 |

NOTES:

1. Refer to Reference [2.2], corresponding Table 2.10.9.84.
2. $P_m < 2.4 \cdot S_m$ or $0.7 \cdot S_u = 44.8$ ksi
   $P_m + P_b < 3.6 \cdot S_m$ or $1.0 \cdot S_u = 64.4$ ksi
3. See Table 2.32 for combination index identification.
4. Stresses are given at the centroid of the element, therefore, the same stress value is used for $P_m$ and $P_m + P_b$.

**Table 2.149. Summary of Stresses for Load Combinations Accident Conditions of Transport, Stress Point 6 (0.50 in. Wall Toroid)**

| Load Combination | Combination Index | Stress Intensity (psi) | |
|---|---|---|---|
| | | $P_m$ | $P_m + P_b$ |
| Free Drop 30 Foot - Top | 7a | 5.36E+01 | 5.36E+01 |
| Free Drop 30 Foot - Top | 7b | 5.36E+01 | 5.36E+01 |
| Free Drop 30 Foot - Top | 7c | 5.36E+01 | 5.36E+01 |
| Free Drop 30 Foot - Bottom | 7a | 3.14E+03 | 3.14E+03 |
| Free Drop 30 Foot - Bottom | 7b | 3.14E+03 | 3.14E+03 |
| Free Drop 30 Foot - Bottom | 7c | 3.14E+03 | 3.14E+03 |
| Free Drop 30 Foot - Side | 7a | 2.19E+03 | 2.19E+03 |
| Free Drop 30 Foot - Side | 7b | 2.19E+03 | 2.19E+03 |
| Free Drop 30 Foot - Side | 7c | 2.19E+03 | 2.19E+03 |
| Free Drop 30 Foot - CG | 7a | 3.93E+02 | 3.93E+02 |
| Free Drop 30 Foot - CG | 7b | 3.93E+02 | 3.93E+02 |
| Free Drop 30 Foot - CG | 7c | 3.93E+02 | 3.93E+02 |
| Puncture | 8a | 2.19E+03 | 2.19E+03 |
| Puncture | 8b | 2.19E+03 | 2.19E+03 |
| Puncture | 8c | 2.19E+03 | 2.19E+03 |
| Thermal Fire - t = 0.5 Hr | 9 | 7.86E+00 | 7.86E+00 |
| Thermal Fire - t = 1.0 Hr | 9 | 7.86E+00 | 7.86E+00 |
| Thermal Fire - t = 1.5 Hr | 9 | 7.86E+00 | 7.86E+00 |
| Thermal Fire - t = 2.0 Hr | 9 | 7.86E+00 | 7.86E+00 |
| Thermal Fire - t = 2.5 Hr | 9 | 7.86E+00 | 7.86E+00 |
| Thermal Fire - t = 3.0 Hr | 9 | 7.86E+00 | 7.86E+00 |
| Maximum Stress Intensity | | 3.14E+03 | 3.14E+03 |

NOTES:

1. Refer to Reference [2.2], corresponding Table 2.10.9.85.
2. $P_m < 2.4 \cdot S_m$ or $0.7 \cdot S_u = 44.8$ ksi
   $P_m + P_b < 3.6 \cdot S_m$ or $1.0 \cdot S_u = 64.4$ ksi
3. See Table 2.32 for combination index identification.
4. Stresses are given at the centroid of the element, therefore, the same stress value is used for $P_m$ and $P_m + P_b$.

**Table 2.150. Summary of Stresses for Load Combinations Accident Conditions of Transport, Stress Point 7a (0.50 in. Wall Toroid)**

| Load Combination | Combination Index | Stress Intensity (psi) | |
|---|---|---|---|
| | | $P_m$ | $P_m + P_b$ |
| Free Drop 30 Foot - Top | 7a | 2.10E+03 | 2.01E+03 |
| Free Drop 30 Foot - Top | 7b | 2.10E+03 | 2.01E+03 |
| Free Drop 30 Foot - Top | 7c | 2.10E+03 | 2.01E+03 |
| Free Drop 30 Foot - Bottom | 7a | 8.16E+03 | 1.49E+04 |
| Free Drop 30 Foot - Bottom | 7b | 8.16E+03 | 1.49E+04 |
| Free Drop 30 Foot - Bottom | 7c | 8.16E+03 | 1.49E+04 |
| Free Drop 30 Foot - Side | 7a | 7.46E+03 | 1.37E+03 |
| Free Drop 30 Foot - Side | 7b | 7.46E+03 | 1.37E+03 |
| Free Drop 30 Foot - Side | 7c | 7.46E+03 | 1.37E+03 |
| Free Drop 30 Foot - CG | 7a | 6.46E+02 | 1.49E+03 |
| Free Drop 30 Foot - CG | 7b | 6.46E+02 | 1.49E+03 |
| Free Drop 30 Foot - CG | 7c | 6.46E+02 | 1.49E+03 |
| Puncture | 8a | 7.46E+03 | 1.37E+03 |
| Puncture | 8b | 7.46E+03 | 1.37E+03 |
| Puncture | 8c | 7.46E+03 | 1.37E+03 |
| Thermal Fire - t = 0.5 Hr | 9 | 1.00E+02 | 6.22E+01 |
| Thermal Fire - t = 1.0 Hr | 9 | 1.00E+02 | 6.22E+01 |
| Thermal Fire - t = 1.5 Hr | 9 | 6.22E+01 | 1.00E+02 |
| Thermal Fire - t = 2.0 Hr | 9 | 6.22E+01 | 1.00E+02 |
| Thermal Fire - t = 2.5 Hr | 9 | 6.22E+01 | 1.00E+02 |
| Thermal Fire - t = 3.0 Hr | 9 | 6.22E+01 | 1.00E+02 |
| Maximum Stress Intensity | | 8.16E+03 | 1.49E+04 |

NOTES:

1. Refer to Reference [2.2], corresponding Table 2.10.9.86.
2. $P_m < 2.4 \cdot S_m$ or $0.7 \cdot S_u = 44.8$ ksi
   $P_m + P_b < 3.6 \cdot S_m$ or $1.0 \cdot S_u = 64.4$ ksi
3. See Table 2.32 for combination index identification.

**Table 2.151. Summary of Stresses for Load Combinations Accident Conditions of Transport, Stress Point 7b (0.50 in. Wall Toroid)**

| Load Combination | Combination Index | Stress Intensity (psi) | |
|---|---|---|---|
| | | $P_m$ | $P_m + P_b$ |
| Free Drop 30 Foot - Top | 7a | 2.10E+03 | 2.21E+03 |
| Free Drop 30 Foot - Top | 7b | 2.10E+03 | 2.21E+03 |
| Free Drop 30 Foot - Top | 7c | 2.10E+03 | 2.21E+03 |
| Free Drop 30 Foot - Bottom | 7a | 8.16E+03 | 3.92E+03 |
| Free Drop 30 Foot - Bottom | 7b | 8.16E+03 | 3.92E+03 |
| Free Drop 30 Foot - Bottom | 7c | 8.16E+03 | 3.92E+03 |
| Free Drop 30 Foot - Side | 7a | 7.46E+03 | 1.84E+04 |
| Free Drop 30 Foot - Side | 7b | 7.46E+03 | 1.84E+04 |
| Free Drop 30 Foot - Side | 7c | 7.46E+03 | 1.84E+04 |
| Free Drop 30 Foot - CG | 7a | 6.46E+02 | 1.70E+03 |
| Free Drop 30 Foot - CG | 7b | 6.46E+02 | 1.70E+03 |
| Free Drop 30 Foot - CG | 7c | 6.46E+02 | 1.70E+03 |
| Puncture | 8a | 7.46E+03 | 1.84E+04 |
| Puncture | 8b | 7.46E+03 | 1.84E+04 |
| Puncture | 8c | 7.46E+03 | 1.84E+04 |
| Thermal Fire - t = 0.5 Hr | 9 | 3.93E+02 | 6.22E+01 |
| Thermal Fire - t = 1.0 Hr | 9 | 3.93E+02 | 6.22E+01 |
| Thermal Fire - t = 1.5 Hr | 9 | 6.22E+01 | 3.93E+01 |
| Thermal Fire - t = 2.0 Hr | 9 | 6.22E+01 | 3.93E+01 |
| Thermal Fire - t = 2.5 Hr | 9 | 6.22E+01 | 3.93E+01 |
| Thermal Fire - t = 3.0 Hr | 9 | 6.22E+01 | 3.93E+01 |
| Maximum Stress Intensity | | 8.16E+03 | 1.84E+04 |

NOTES:

1. Refer to Reference [2.2], corresponding Table 2.10.9.87.
2. $P_m < 2.4 \cdot S_m$ or $0.7 \cdot S_u = 44.8$ ksi
   $P_m + P_b < 3.6 \cdot S_m$ or $1.0 \cdot S_u = 64.4$ ksi
3. See Table 2.32 for combination index identification.

**Table 2.152. Summary of Stresses for Load Combinations Accident Conditions of Transport, Stress Point 8a (0.50 in. Wall Toroid)**

| Load Combination | Combination Index | Stress Intensity (psi) | |
|---|---|---|---|
| | | $P_m$ | $P_m + P_b$ |
| Free Drop 30 Foot - Top | 7a | 4.46E+02 | 3.91E+02 |
| Free Drop 30 Foot - Top | 7b | 4.46E+02 | 3.91E+02 |
| Free Drop 30 Foot - Top | 7c | 4.46E+02 | 3.91E+02 |
| Free Drop 30 Foot - Bottom | 7a | 9.03E+03 | 6.58E+03 |
| Free Drop 30 Foot - Bottom | 7b | 9.03E+03 | 6.58E+03 |
| Free Drop 30 Foot - Bottom | 7c | 9.03E+03 | 6.58E+03 |
| Free Drop 30 Foot - Side | 7a | 4.64E+03 | 1.24E+04 |
| Free Drop 30 Foot - Side | 7b | 4.64E+03 | 1.24E+04 |
| Free Drop 30 Foot - Side | 7c | 4.64E+03 | 1.24E+04 |
| Free Drop 30 Foot - CG | 7a | 1.83E+03 | 3.64E+03 |
| Free Drop 30 Foot - CG | 7b | 1.83E+03 | 3.64E+03 |
| Free Drop 30 Foot - CG | 7c | 1.83E+03 | 3.64E+03 |
| Puncture | 8a | 4.64E+03 | 1.24E+04 |
| Puncture | 8b | 4.64E+03 | 1.24E+04 |
| Puncture | 8c | 4.64E+03 | 1.24E+04 |
| Thermal Fire - t = 0.5 Hr | 9 | 4.32E+01 | 3.01E+01 |
| Thermal Fire - t = 1.0 Hr | 9 | 4.32E+01 | 3.01E+01 |
| Thermal Fire - t = 1.5 Hr | 9 | 3.01E+01 | 4.32E+01 |
| Thermal Fire - t = 2.0 Hr | 9 | 3.01E+01 | 4.32E+01 |
| Thermal Fire - t = 2.5 Hr | 9 | 3.01E+01 | 4.32E+01 |
| Thermal Fire - t = 3.0 Hr | 9 | 3.01E+01 | 4.32E+01 |
| Maximum Stress Intensity | | 9.03E+03 | 1.24E+04 |

NOTES:

1. Refer to Reference [2.2], corresponding Table 2.10.9.88.
2. $P_m < 2.4 \cdot S_m$ or $0.7 \cdot S_u = 44.8$ ksi
   $P_m + P_b < 3.6 \cdot S_m$ or $1.0 \cdot S_u = 64.4$ ksi
3. See Table 2.32 for combination index identification.

**Table 2.153. Summary of Stresses for Load Combinations Accident Conditions of Transport, Stress Point 8b (0.50 in. Wall Toroid)**

| Load Combination | Combination Index | Stress Intensity (psi) | |
|---|---|---|---|
| | | $P_m$ | $P_m + P_b$ |
| Free Drop 30 Foot - Top | 7a | 4.46E+02 | 5.00E+02 |
| Free Drop 30 Foot - Top | 7b | 4.46E+02 | 5.00E+02 |
| Free Drop 30 Foot - Top | 7c | 4.46E+02 | 5.00E+02 |
| Free Drop 30 Foot - Bottom | 7a | 9.03E+03 | 1.38E+04 |
| Free Drop 30 Foot - Bottom | 7b | 9.03E+03 | 1.38E+04 |
| Free Drop 30 Foot - Bottom | 7c | 9.03E+03 | 1.38E+04 |
| Free Drop 30 Foot - Side | 7a | 4.64E+03 | 4.33E+03 |
| Free Drop 30 Foot - Side | 7b | 4.64E+03 | 4.33E+03 |
| Free Drop 30 Foot - Side | 7c | 4.64E+03 | 4.33E+03 |
| Free Drop 30 Foot - CG | 7a | 1.83E+03 | 4.29E+02 |
| Free Drop 30 Foot - CG | 7b | 1.83E+03 | 4.29E+02 |
| Free Drop 30 Foot - CG | 7c | 1.83E+03 | 4.29E+02 |
| Puncture | 8a | 4.64E+03 | 4.33E+03 |
| Puncture | 8b | 4.64E+03 | 4.33E+03 |
| Puncture | 8c | 4.64E+03 | 4.33E+03 |
| Thermal Fire - t = 0.5 Hr | 9 | 1.69E+01 | 3.01E+01 |
| Thermal Fire - t = 1.0 Hr | 9 | 1.69E+01 | 3.01E+01 |
| Thermal Fire - t = 1.5 Hr | 9 | 3.01E+01 | 1.69E+01 |
| Thermal Fire - t = 2.0 Hr | 9 | 3.01E+01 | 1.69E+01 |
| Thermal Fire - t = 2.5 Hr | 9 | 3.01E+01 | 1.69E+01 |
| Thermal Fire - t = 3.0 Hr | 9 | 3.01E+01 | 1.69E+01 |
| Maximum Stress Intensity | | 9.03E+03 | 1.38E+04 |

NOTES:

1. Refer to Reference [2.2], corresponding Table 2.10.9.89.
2. $P_m < 2.4 \cdot S_m$ or $0.7 \cdot S_u = 44.8$ ksi
   $P_m + P_b < 3.6 \cdot S_m$ or $1.0 \cdot S_u = 64.4$ ksi
3. See Table 2.32 for combination index identification.

**Table 2.154. Summary of Stresses for Load Combinations Accident Conditions of Transport, Stress Point 9a (0.50 in. Wall Toroid)**

| Load Combination | Combination Index | Stress Intensity (psi) | |
|---|---|---|---|
| | | $P_m$ | $P_m + P_b$ |
| Free Drop 30 Foot - Top | 7a | 2.62E+03 | 3.15E+03 |
| Free Drop 30 Foot - Top | 7b | 2.62E+03 | 3.15E+03 |
| Free Drop 30 Foot - Top | 7c | 2.62E+03 | 3.15E+03 |
| Free Drop 30 Foot - Bottom | 7a | 1.10E+04 | 1.18E+04 |
| Free Drop 30 Foot - Bottom | 7b | 1.10E+04 | 1.18E+04 |
| Free Drop 30 Foot - Bottom | 7c | 1.10E+04 | 1.18E+04 |
| Free Drop 30 Foot - Side | 7a | 3.46E+03 | 5.12E+02 |
| Free Drop 30 Foot - Side | 7b | 3.46E+03 | 5.12E+02 |
| Free Drop 30 Foot - Side | 7c | 3.46E+03 | 5.12E+02 |
| Free Drop 30 Foot - CG | 7a | 1.59E+03 | 1.15E+03 |
| Free Drop 30 Foot - CG | 7b | 1.59E+03 | 1.15E+03 |
| Free Drop 30 Foot - CG | 7c | 1.59E+03 | 1.15E+03 |
| Puncture | 8a | 3.46E+03 | 5.12E+02 |
| Puncture | 8b | 3.46E+03 | 5.12E+02 |
| Puncture | 8c | 3.46E+03 | 5.12E+02 |
| Thermal Fire - t = 0.5 Hr | 9 | 1.44E+02 | 1.33E+02 |
| Thermal Fire - t = 1.0 Hr | 9 | 1.44E+02 | 1.33E+02 |
| Thermal Fire - t = 1.5 Hr | 9 | 1.33E+02 | 1.44E+02 |
| Thermal Fire - t = 2.0 Hr | 9 | 1.33E+02 | 1.44E+02 |
| Thermal Fire - t = 2.5 Hr | 9 | 1.33E+02 | 1.44E+02 |
| Thermal Fire - t = 3.0 Hr | 9 | 1.33E+02 | 1.44E+02 |
| Maximum Stress Intensity | | 1.10E+04 | 1.18E+04 |

NOTES:

1. Refer to Reference [2.2], corresponding Table 2.10.9.90.
2. $P_m < 2.4 \cdot S_m$ or $0.7 \cdot S_u = 44.8$ ksi
   $P_m + P_b < 3.6 \cdot S_m$ or $1.0 \cdot S_u = 64.4$ ksi
3. See Table 2.32 for combination index identification.

**Table 2.155. Summary of Stresses for Load Combinations Accident Conditions of Transport, Stress Point 9b (0.50 in. Wall Toroid)**

| Load Combination | Combination Index | Stress Intensity (psi) | |
|---|---|---|---|
| | | $P_m$ | $P_m + P_b$ |
| Free Drop 30 Foot - Top | 7a | 2.62E+03 | 2.09E+03 |
| Free Drop 30 Foot - Top | 7b | 2.62E+03 | 2.09E+03 |
| Free Drop 30 Foot - Top | 7c | 2.62E+03 | 2.09E+03 |
| Free Drop 30 Foot - Bottom | 7a | 1.10E+04 | 1.01E+04 |
| Free Drop 30 Foot - Bottom | 7b | 1.10E+04 | 1.01E+04 |
| Free Drop 30 Foot - Bottom | 7c | 1.10E+04 | 1.01E+04 |
| Free Drop 30 Foot - Side | 7a | 3.46E+03 | 6.81E+03 |
| Free Drop 30 Foot - Side | 7b | 3.46E+03 | 6.81E+03 |
| Free Drop 30 Foot - Side | 7c | 3.46E+03 | 6.81E+03 |
| Free Drop 30 Foot - CG | 7a | 1.59E+03 | 2.05E+03 |
| Free Drop 30 Foot - CG | 7b | 1.59E+03 | 2.05E+03 |
| Free Drop 30 Foot - CG | 7c | 1.59E+03 | 2.05E+03 |
| Puncture | 8a | 3.46E+03 | 6.81E+03 |
| Puncture | 8b | 3.46E+03 | 6.81E+03 |
| Puncture | 8c | 3.46E+03 | 6.81E+03 |
| Thermal Fire - t = 0.5 Hr | 9 | 1.23E+02 | 1.33E+02 |
| Thermal Fire - t = 1.0 Hr | 9 | 1.23E+02 | 1.33E+02 |
| Thermal Fire - t = 1.5 Hr | 9 | 1.33E+02 | 1.23E+02 |
| Thermal Fire - t = 2.0 Hr | 9 | 1.33E+02 | 1.23E+02 |
| Thermal Fire - t = 2.5 Hr | 9 | 1.33E+02 | 1.23E+02 |
| Thermal Fire - t = 3.0 Hr | 9 | 1.33E+02 | 1.23E+02 |
| Maximum Stress Intensity | | 1.10E+04 | 1.01E+04 |

NOTES:

1. Refer to Reference [2.2], corresponding Table 2.10.9.91.
2. $P_m < 2.4 \cdot S_m$ or $0.7 \cdot S_u = 44.8$ ksi
   $P_m + P_b < 3.6 \cdot S_m$ or $1.0 \cdot S_u = 64.4$ ksi
3. See Table 2.32 for combination index identification.

**Table 2.156. Summary of Stresses for Load Combinations Accident Conditions of Transport, Stress Point 10a (0.50 in. Wall Toroid)**

| Load Combination | Combination Index | Stress Intensity (psi) | |
|---|---|---|---|
| | | $P_m$ | $P_m + P_b$ |
| Free Drop 30 Foot - Top | 7a | 2.00E+03 | 1.67E+03 |
| Free Drop 30 Foot - Top | 7b | 2.00E+03 | 1.67E+03 |
| Free Drop 30 Foot - Top | 7c | 2.00E+03 | 1.67E+03 |
| Free Drop 30 Foot - Bottom | 7a | 1.82E+04 | 1.89E+04 |
| Free Drop 30 Foot - Bottom | 7b | 1.82E+04 | 1.89E+04 |
| Free Drop 30 Foot - Bottom | 7c | 1.82E+04 | 1.89E+04 |
| Free Drop 30 Foot - Side | 7a | 7.55E+03 | 5.74E+03 |
| Free Drop 30 Foot - Side | 7b | 7.55E+03 | 5.74E+03 |
| Free Drop 30 Foot - Side | 7c | 7.55E+03 | 5.74E+03 |
| Free Drop 30 Foot - CG | 7a | 2.65E+03 | 2.40E+03 |
| Free Drop 30 Foot - CG | 7b | 2.65E+03 | 2.40E+03 |
| Free Drop 30 Foot - CG | 7c | 2.65E+03 | 2.40E+03 |
| Puncture | 8a | 7.55E+03 | 5.74E+03 |
| Puncture | 8b | 7.55E+03 | 5.74E+03 |
| Puncture | 8c | 7.55E+03 | 5.74E+03 |
| Thermal Fire - t = 0.5 Hr | 9 | 6.32E+01 | 6.06E+01 |
| Thermal Fire - t = 1.0 Hr | 9 | 6.32E+01 | 6.06E+01 |
| Thermal Fire - t = 1.5 Hr | 9 | 6.06E+01 | 6.32E+01 |
| Thermal Fire - t = 2.0 Hr | 9 | 6.06E+01 | 6.32E+01 |
| Thermal Fire - t = 2.5 Hr | 9 | 6.06E+01 | 6.32E+01 |
| Thermal Fire - t = 3.0 Hr | 9 | 6.06E+01 | 6.32E+01 |
| Maximum Stress Intensity | | 1.82E+04 | 1.89E+04 |

NOTES:

1. Refer to Reference [2.2], corresponding Table 2.10.9.92.
2. $P_m < 2.4 \cdot S_m$ or $0.7 \cdot S_u = 44.8$ ksi
   $P_m + P_b < 3.6 \cdot S_m$ or $1.0 \cdot S_u = 64.4$ ksi
3. See Table 2.32 for combination index identification.

**Table 2.157. Summary of Stresses for Load Combinations Accident Conditions of Transport, Stress Point 10b (0.50 in. Wall Toroid)**

| Load Combination | Combination Index | Stress Intensity (psi) | |
|---|---|---|---|
| | | $P_m$ | $P_m + P_b$ |
| Free Drop 30 Foot - Top | 7a | 2.00E+03 | 2.48E+03 |
| Free Drop 30 Foot - Top | 7b | 2.00E+03 | 2.48E+03 |
| Free Drop 30 Foot - Top | 7c | 2.00E+03 | 2.48E+03 |
| Free Drop 30 Foot - Bottom | 7a | 1.82E+04 | 1.75E+04 |
| Free Drop 30 Foot - Bottom | 7b | 1.82E+04 | 1.75E+04 |
| Free Drop 30 Foot - Bottom | 7c | 1.82E+04 | 1.75E+04 |
| Free Drop 30 Foot - Side | 7a | 7.55E+03 | 9.61E+03 |
| Free Drop 30 Foot - Side | 7b | 7.55E+03 | 9.61E+03 |
| Free Drop 30 Foot - Side | 7c | 7.55E+03 | 9.61E+03 |
| Free Drop 30 Foot - CG | 7a | 2.65E+03 | 2.91E+03 |
| Free Drop 30 Foot - CG | 7b | 2.65E+03 | 2.91E+03 |
| Free Drop 30 Foot - CG | 7c | 2.65E+03 | 2.91E+03 |
| Puncture | 8a | 7.55E+03 | 9.61E+03 |
| Puncture | 8b | 7.55E+03 | 9.61E+03 |
| Puncture | 8c | 7.55E+03 | 9.61E+03 |
| Thermal Fire - t = 0.5 Hr | 9 | 5.80E+01 | 6.06E+01 |
| Thermal Fire - t = 1.0 Hr | 9 | 5.80E+01 | 6.06E+01 |
| Thermal Fire - t = 1.5 Hr | 9 | 6.06E+01 | 5.80E+01 |
| Thermal Fire - t = 2.0 Hr | 9 | 6.06E+01 | 5.80E+01 |
| Thermal Fire - t = 2.5 Hr | 9 | 6.06E+01 | 5.80E+01 |
| Thermal Fire - t = 3.0 Hr | 9 | 6.06E+01 | 5.80E+01 |
| Maximum Stress Intensity | | 1.82E+04 | 1.75E+04 |

NOTES:

1. Refer to Reference [2.2], corresponding Table 2.10.9.93.
2. $P_m < 2.4 \cdot S_m$ or $0.7 \cdot S_u = 44.8$ ksi
   $P_m + P_b < 3.6 \cdot S_m$ or $1.0 \cdot S_u = 64.4$ ksi
3. See Table 2.32 for combination index identification.

**Table 2.158. Summary of Stresses for Load Combinations Accident Conditions of Transport, Stress Point 11a (0.50 in. Wall Toroid)**

| Load Combination | Combination Index | Stress Intensity (psi) | |
|---|---|---|---|
| | | $P_m$ | $P_m + P_b$ |
| Free Drop 30 Foot - Top | 7a | 5.16E+03 | 5.54E+03 |
| Free Drop 30 Foot - Top | 7b | 5.16E+03 | 5.54E+03 |
| Free Drop 30 Foot - Top | 7c | 5.16E+03 | 5.54E+03 |
| Free Drop 30 Foot - Bottom | 7a | 5.24E+03 | 5.62E+03 |
| Free Drop 30 Foot - Bottom | 7b | 5.24E+03 | 5.62E+03 |
| Free Drop 30 Foot - Bottom | 7c | 5.24E+03 | 5.62E+03 |
| Free Drop 30 Foot - Side | 7a | 4.42E+03 | 1.47E+03 |
| Free Drop 30 Foot - Side | 7b | 4.42E+03 | 1.47E+03 |
| Free Drop 30 Foot - Side | 7c | 4.42E+03 | 1.47E+03 |
| Free Drop 30 Foot - CG | 7a | 1.89E+03 | 1.44E+03 |
| Free Drop 30 Foot - CG | 7b | 1.89E+03 | 1.44E+03 |
| Free Drop 30 Foot - CG | 7c | 1.89E+03 | 1.44E+03 |
| Puncture | 8a | 4.42E+03 | 1.47E+03 |
| Puncture | 8b | 4.42E+03 | 1.47E+03 |
| Puncture | 8c | 4.42E+03 | 1.47E+03 |
| Thermal Fire - t = 0.5 Hr | 9 | 1.42E+02 | 1.31E+02 |
| Thermal Fire - t = 1.0 Hr | 9 | 1.42E+02 | 1.31E+02 |
| Thermal Fire - t = 1.5 Hr | 9 | 1.31E+02 | 1.42E+02 |
| Thermal Fire - t = 2.0 Hr | 9 | 1.31E+02 | 1.42E+02 |
| Thermal Fire - t = 2.5 Hr | 9 | 1.31E+02 | 1.42E+02 |
| Thermal Fire - t = 3.0 Hr | 9 | 1.31E+02 | 1.42E+02 |
| Maximum Stress Intensity | | 5.24E+03 | 5.62E+03 |

NOTES:

1. Refer to Reference [2.2], corresponding Table 2.10.9.94.
2. $P_m < 2.4 \cdot S_m$ or $0.7 \cdot S_u = 44.8$ ksi
   $P_m + P_b < 3.6 \cdot S_m$ or $1.0 \cdot S_u = 64.4$ ksi
3. See Table 2.32 for combination index identification.

**Table 2.159. Summary of Stresses for Load Combinations Accident Conditions of Transport, Stress Point 11b (0.50 in. Wall Toroid)**

| Load Combination | Combination Index | Stress Intensity (psi) | |
|---|---|---|---|
| | | $P_m$ | $P_m + P_b$ |
| Free Drop 30 Foot - Top | 7a | 5.16E+03 | 4.79E+03 |
| Free Drop 30 Foot - Top | 7b | 5.16E+03 | 4.79E+03 |
| Free Drop 30 Foot - Top | 7c | 5.16E+03 | 4.79E+03 |
| Free Drop 30 Foot - Bottom | 7a | 5.24E+03 | 4.87E+03 |
| Free Drop 30 Foot - Bottom | 7b | 5.24E+03 | 4.87E+03 |
| Free Drop 30 Foot - Bottom | 7c | 5.24E+03 | 4.87E+03 |
| Free Drop 30 Foot - Side | 7a | 4.42E+03 | 7.99E+03 |
| Free Drop 30 Foot - Side | 7b | 4.42E+03 | 7.99E+03 |
| Free Drop 30 Foot - Side | 7c | 4.42E+03 | 7.99E+03 |
| Free Drop 30 Foot - CG | 7a | 1.89E+03 | 2.34E+03 |
| Free Drop 30 Foot - CG | 7b | 1.89E+03 | 2.34E+03 |
| Free Drop 30 Foot - CG | 7c | 1.89E+03 | 2.34E+03 |
| Puncture | 8a | 4.42E+03 | 7.99E+03 |
| Puncture | 8b | 4.42E+03 | 7.99E+03 |
| Puncture | 8c | 4.42E+03 | 7.99E+03 |
| Thermal Fire - t = 0.5 Hr | 9 | 1.20E+02 | 1.31E+02 |
| Thermal Fire - t = 1.0 Hr | 9 | 1.20E+02 | 1.31E+02 |
| Thermal Fire - t = 1.5 Hr | 9 | 1.31E+02 | 1.20E+02 |
| Thermal Fire - t = 2.0 Hr | 9 | 1.31E+02 | 1.20E+02 |
| Thermal Fire - t = 2.5 Hr | 9 | 1.31E+02 | 1.20E+02 |
| Thermal Fire - t = 3.0 Hr | 9 | 1.31E+02 | 1.20E+02 |
| Maximum Stress Intensity | | 5.24E+03 | 7.99E+03 |

NOTES:

1. Refer to Reference [2.2], corresponding Table 2.10.9.95.
2. $P_m < 2.4 \cdot S_m$ or $0.7 \cdot S_u = 44.8$ ksi
   $P_m + P_b < 3.6 \cdot S_m$ or $1.0 \cdot S_u = 64.4$ ksi
3. See Table 2.32 for combination index identification.

**Table 2.160. Summary of Stresses for Load Combinations Accident Conditions of Transport, Stress Point 12a (0.50 in. Wall Toroid)**

| Load Combination | Combination Index | Stress Intensity (psi) | |
|---|---|---|---|
| | | $P_m$ | $P_m + P_b$ |
| Free Drop 30 Foot - Top | 7a | 9.02E+03 | 9.27E+03 |
| Free Drop 30 Foot - Top | 7b | 9.02E+03 | 9.27E+03 |
| Free Drop 30 Foot - Top | 7c | 9.02E+03 | 9.27E+03 |
| Free Drop 30 Foot - Bottom | 7a | 9.43E+03 | 9.83E+03 |
| Free Drop 30 Foot - Bottom | 7b | 9.43E+03 | 9.83E+03 |
| Free Drop 30 Foot - Bottom | 7c | 9.43E+03 | 9.83E+03 |
| Free Drop 30 Foot - Side | 7a | 8.17E+03 | 6.57E+03 |
| Free Drop 30 Foot - Side | 7b | 8.17E+03 | 6.57E+03 |
| Free Drop 30 Foot - Side | 7c | 8.17E+03 | 6.57E+03 |
| Free Drop 30 Foot - CG | 7a | 2.92E+03 | 2.69E+03 |
| Free Drop 30 Foot - CG | 7b | 2.92E+03 | 2.69E+03 |
| Free Drop 30 Foot - CG | 7c | 2.92E+03 | 2.69E+03 |
| Puncture | 8a | 8.17E+03 | 6.57E+03 |
| Puncture | 8b | 8.17E+03 | 6.57E+03 |
| Puncture | 8c | 8.17E+03 | 6.57E+03 |
| Thermal Fire - t = 0.5 Hr | 9 | 6.16E+01 | 5.88E+01 |
| Thermal Fire - t = 1.0 Hr | 9 | 6.16E+01 | 5.88E+01 |
| Thermal Fire - t = 1.5 Hr | 9 | 5.88E+01 | 6.16E+01 |
| Thermal Fire - t = 2.0 Hr | 9 | 5.88E+01 | 6.16E+01 |
| Thermal Fire - t = 2.5 Hr | 9 | 5.88E+01 | 6.16E+01 |
| Thermal Fire - t = 3.0 Hr | 9 | 5.88E+01 | 6.16E+01 |
| Maximum Stress Intensity | | 9.43E+03 | 9.83E+03 |

NOTES:

1. Refer to Reference [2.2], corresponding Table 2.10.9.96.
2. $P_m < 2.4 \cdot S_m$ or $0.7 \cdot S_u$ = 44.8 ksi
   $P_m + P_b < 3.6 \cdot S_m$ or $1.0 \cdot S_u$ = 64.4 ksi
3. See Table 2.32 for combination index identification.

**Table 2.161. Summary of Stresses for Load Combinations Accident Conditions of Transport, Stress Point 12b (0.50 in. Wall Toroid)**

| Load Combination | Combination Index | Stress Intensity (psi) | |
|---|---|---|---|
| | | $P_m$ | $P_m + P_b$ |
| Free Drop 30 Foot - Top | 7a | 9.02E+03 | 8.76E+03 |
| Free Drop 30 Foot - Top | 7b | 9.02E+03 | 8.76E+03 |
| Free Drop 30 Foot - Top | 7c | 9.02E+03 | 8.76E+03 |
| Free Drop 30 Foot - Bottom | 7a | 9.43E+03 | 9.03E+03 |
| Free Drop 30 Foot - Bottom | 7b | 9.43E+03 | 9.03E+03 |
| Free Drop 30 Foot - Bottom | 7c | 9.43E+03 | 9.03E+03 |
| Free Drop 30 Foot - Side | 7a | 8.17E+03 | 1.00E+04 |
| Free Drop 30 Foot - Side | 7b | 8.17E+03 | 1.00E+04 |
| Free Drop 30 Foot - Side | 7c | 8.17E+03 | 1.00E+04 |
| Free Drop 30 Foot - CG | 7a | 2.92E+03 | 3.16E+03 |
| Free Drop 30 Foot - CG | 7b | 2.92E+03 | 3.16E+03 |
| Free Drop 30 Foot - CG | 7c | 2.92E+03 | 3.16E+03 |
| Puncture | 8a | 8.17E+03 | 1.00E+04 |
| Puncture | 8b | 8.17E+03 | 1.00E+04 |
| Puncture | 8c | 8.17E+03 | 1.00E+04 |
| Thermal Fire - t = 0.5 Hr | 9 | 5.59E+01 | 5.88E+01 |
| Thermal Fire - t = 1.0 Hr | 9 | 5.59E+01 | 5.88E+01 |
| Thermal Fire - t = 1.5 Hr | 9 | 5.88E+01 | 5.59E+01 |
| Thermal Fire - t = 2.0 Hr | 9 | 5.88E+01 | 5.59E+01 |
| Thermal Fire - t = 2.5 Hr | 9 | 5.88E+01 | 5.59E+01 |
| Thermal Fire - t = 3.0 Hr | 9 | 5.88E+01 | 5.59E+01 |
| Maximum Stress Intensity | | 9.43E+03 | 1.00E+04 |

NOTES:

1. Refer to Reference [2.2], corresponding Table 2.10.9.97.
2. $P_m < 2.4 \cdot S_m$ or $0.7 \cdot S_u = 44.8$ ksi
   $P_m + P_b < 3.6 \cdot S_m$ or $1.0 \cdot S_u = 64.4$ ksi
3. See Table 2.32 for combination index identification.

**Table 2.162. Summary of Stresses for Load Combinations Accident Conditions of Transport, Stress Point 13a (0.50 in. Wall Toroid)**

| Load Combination | Combination Index | Stress Intensity (psi) | |
|---|---|---|---|
| | | $P_m$ | $P_m + P_b$ |
| Free Drop 30 Foot - Top | 7a | 9.87E+03 | 1.07E+04 |
| Free Drop 30 Foot - Top | 7b | 9.87E+03 | 1.07E+04 |
| Free Drop 30 Foot - Top | 7c | 9.87E+03 | 1.07E+04 |
| Free Drop 30 Foot - Bottom | 7a | 4.52E+03 | 4.97E+03 |
| Free Drop 30 Foot - Bottom | 7b | 4.52E+03 | 4.97E+03 |
| Free Drop 30 Foot - Bottom | 7c | 4.52E+03 | 4.97E+03 |
| Free Drop 30 Foot - Side | 7a | 2.08E+03 | 2.29E+03 |
| Free Drop 30 Foot - Side | 7b | 2.08E+03 | 2.29E+03 |
| Free Drop 30 Foot - Side | 7c | 2.08E+03 | 2.29E+03 |
| Free Drop 30 Foot - CG | 7a | 1.50E+03 | 1.14E+03 |
| Free Drop 30 Foot - CG | 7b | 1.50E+03 | 1.14E+03 |
| Free Drop 30 Foot - CG | 7c | 1.50E+03 | 1.14E+03 |
| Puncture | 8a | 2.08E+03 | 2.29E+03 |
| Puncture | 8b | 2.08E+03 | 2.29E+03 |
| Puncture | 8c | 2.08E+03 | 2.29E+03 |
| Thermal Fire - t = 0.5 Hr | 9 | 1.44E+02 | 1.34E+02 |
| Thermal Fire - t = 1.0 Hr | 9 | 1.44E+02 | 1.34E+02 |
| Thermal Fire - t = 1.5 Hr | 9 | 1.34E+02 | 1.44E+02 |
| Thermal Fire - t = 2.0 Hr | 9 | 1.34E+02 | 1.44E+02 |
| Thermal Fire - t = 2.5 Hr | 9 | 1.34E+02 | 1.44E+02 |
| Thermal Fire - t = 3.0 Hr | 9 | 1.34E+02 | 1.44E+02 |
| Maximum Stress Intensity | | 9.87E+03 | 1.07E+04 |

NOTES:

1. Refer to Reference [2.2], corresponding Table 2.10.9.98.
2. $P_m < 2.4 \cdot S_m$ or $0.7 \cdot S_u = 44.8$ ksi
   $P_m + P_b < 3.6 \cdot S_m$ or $1.0 \cdot S_u = 64.4$ ksi
3. See Table 2.32 for combination index identification.

**Table 2.163. Summary of Stresses for Load Combinations Accident Conditions of Transport, Stress Point 13b (0.50 in. Wall Toroid)**

| Load Combination | Combination Index | Stress Intensity (psi) | |
|---|---|---|---|
| | | $P_m$ | $P_m + P_b$ |
| Free Drop 30 Foot - Top | 7a | 9.87E+03 | 9.05E+03 |
| Free Drop 30 Foot - Top | 7b | 9.87E+03 | 9.05E+03 |
| Free Drop 30 Foot - Top | 7c | 9.87E+03 | 9.05E+03 |
| Free Drop 30 Foot - Bottom | 7a | 4.52E+03 | 4.06E+03 |
| Free Drop 30 Foot - Bottom | 7b | 4.52E+03 | 4.06E+03 |
| Free Drop 30 Foot - Bottom | 7c | 4.52E+03 | 4.06E+03 |
| Free Drop 30 Foot - Side | 7a | 2.08E+03 | 3.65E+03 |
| Free Drop 30 Foot - Side | 7b | 2.08E+03 | 3.65E+03 |
| Free Drop 30 Foot - Side | 7c | 2.08E+03 | 3.65E+03 |
| Free Drop 30 Foot - CG | 7a | 1.50E+03 | 1.88E+03 |
| Free Drop 30 Foot - CG | 7b | 1.50E+03 | 1.88E+03 |
| Free Drop 30 Foot - CG | 7c | 1.50E+03 | 1.88E+03 |
| Puncture | 8a | 2.08E+03 | 3.65E+03 |
| Puncture | 8b | 2.08E+03 | 3.65E+03 |
| Puncture | 8c | 2.08E+03 | 3.65E+03 |
| Thermal Fire - t = 0.5 Hr | 9 | 1.25E+02 | 1.34E+02 |
| Thermal Fire - t = 1.0 Hr | 9 | 1.25E+02 | 1.34E+02 |
| Thermal Fire - t = 1.5 Hr | 9 | 1.34E+02 | 1.25E+02 |
| Thermal Fire - t = 2.0 Hr | 9 | 1.34E+02 | 1.25E+02 |
| Thermal Fire - t = 2.5 Hr | 9 | 1.34E+02 | 1.25E+02 |
| Thermal Fire - t = 3.0 Hr | 9 | 1.34E+02 | 1.25E+02 |
| Maximum Stress Intensity | | 9.87E+03 | 9.05E+03 |

NOTES:

1. Refer to Reference [2.2], corresponding Table 2.10.9.99.
2. $P_m < 2.4 \cdot S_m$ or $0.7 \cdot S_u = 44.8$ ksi
   $P_m + P_b < 3.6 \cdot S_m$ or $1.0 \cdot S_u = 64.4$ ksi
3. See Table 2.32 for combination index identification.

**Table 2.164. Summary of Stresses for Load Combinations Accident Conditions of Transport, Stress Point 14a (0.50 in. Wall Toroid)**

| Load Combination | Combination Index | Stress Intensity (psi) | |
|---|---|---|---|
| | | $P_m$ | $P_m + P_b$ |
| Free Drop 30 Foot - Top | 7a | 1.69E+04 | 1.73E+04 |
| Free Drop 30 Foot - Top | 7b | 1.69E+04 | 1.73E+04 |
| Free Drop 30 Foot - Top | 7c | 1.69E+04 | 1.73E+04 |
| Free Drop 30 Foot - Bottom | 7a | 1.91E+03 | 1.86E+03 |
| Free Drop 30 Foot - Bottom | 7b | 1.91E+03 | 1.86E+03 |
| Free Drop 30 Foot - Bottom | 7c | 1.91E+03 | 1.86E+03 |
| Free Drop 30 Foot - Side | 7a | 5.62E+03 | 3.62E+03 |
| Free Drop 30 Foot - Side | 7b | 5.62E+03 | 3.62E+03 |
| Free Drop 30 Foot - Side | 7c | 5.62E+03 | 3.62E+03 |
| Free Drop 30 Foot - CG | 7a | 2.68E+03 | 2.49E+03 |
| Free Drop 30 Foot - CG | 7b | 2.68E+03 | 2.49E+03 |
| Free Drop 30 Foot - CG | 7c | 2.68E+03 | 2.49E+03 |
| Puncture | 8a | 5.62E+03 | 3.62E+03 |
| Puncture | 8b | 5.62E+03 | 3.62E+03 |
| Puncture | 8c | 5.62E+03 | 3.62E+03 |
| Thermal Fire - t = 0.5 Hr | 9 | 6.36E+01 | 6.12E+01 |
| Thermal Fire - t = 1.0 Hr | 9 | 6.36E+01 | 6.12E+01 |
| Thermal Fire - t = 1.5 Hr | 9 | 6.12E+01 | 6.36E+01 |
| Thermal Fire - t = 2.0 Hr | 9 | 6.12E+01 | 6.36E+01 |
| Thermal Fire - t = 2.5 Hr | 9 | 6.12E+01 | 6.36E+01 |
| Thermal Fire - t = 3.0 Hr | 9 | 6.12E+01 | 6.36E+01 |
| Maximum Stress Intensity | | 1.69E+04 | 1.73E+04 |

NOTES:

1. Refer to Reference [2.2], corresponding Table 2.10.9.100.
2. $P_m < 2.4 \cdot S_m$ or $0.7 \cdot S_u$ = 44.8 ksi
   $P_m + P_b < 3.6 \cdot S_m$ or $1.0 \cdot S_u$ = 64.4 ksi
3. See Table 2.32 for combination index identification.

**Table 2.165. Summary of Stresses for Load Combinations Accident Conditions of Transport, Stress Point 14b (0.50 in. Wall Toroid)**

| Load Combination | Combination Index | Stress Intensity (psi) | |
|---|---|---|---|
| | | $P_m$ | $P_m + P_b$ |
| Free Drop 30 Foot - Top | 7a | 1.69E+04 | 1.64E+04 |
| Free Drop 30 Foot - Top | 7b | 1.69E+04 | 1.64E+04 |
| Free Drop 30 Foot - Top | 7c | 1.69E+04 | 1.64E+04 |
| Free Drop 30 Foot - Bottom | 7a | 1.91E+03 | 1.96E+03 |
| Free Drop 30 Foot - Bottom | 7b | 1.91E+03 | 1.96E+03 |
| Free Drop 30 Foot - Bottom | 7c | 1.91E+03 | 1.96E+03 |
| Free Drop 30 Foot - Side | 7a | 5.62E+03 | 7.97E+03 |
| Free Drop 30 Foot - Side | 7b | 5.62E+03 | 7.97E+03 |
| Free Drop 30 Foot - Side | 7c | 5.62E+03 | 7.97E+03 |
| Free Drop 30 Foot - CG | 7a | 2.68E+03 | 2.87E+03 |
| Free Drop 30 Foot - CG | 7b | 2.68E+03 | 2.87E+03 |
| Free Drop 30 Foot - CG | 7c | 2.68E+03 | 2.87E+03 |
| Puncture | 8a | 5.62E+03 | 7.97E+03 |
| Puncture | 8b | 5.62E+03 | 7.97E+03 |
| Puncture | 8c | 5.62E+03 | 7.97E+03 |
| Thermal Fire - t = 0.5 Hr | 9 | 5.88E+01 | 6.12E+01 |
| Thermal Fire - t = 1.0 Hr | 9 | 5.88E+01 | 6.12E+01 |
| Thermal Fire - t = 1.5 Hr | 9 | 6.12E+01 | 5.88E+01 |
| Thermal Fire - t = 2.0 Hr | 9 | 6.12E+01 | 5.88E+01 |
| Thermal Fire - t = 2.5 Hr | 9 | 6.12E+01 | 5.88E+01 |
| Thermal Fire - t = 3.0 Hr | 9 | 6.12E+01 | 5.88E+01 |
| Maximum Stress Intensity | | 1.69E+04 | 1.64E+04 |

NOTES:

1. Refer to Reference [2.2], corresponding Table 2.10.9.101.
2. $P_m < 2.4 \cdot S_m$ or $0.7 \cdot S_u = 44.8$ ksi
   $P_m + P_b < 3.6 \cdot S_m$ or $1.0 \cdot S_u = 64.4$ ksi
3. See Table 2.32 for combination index identification.

**Table 2.166. Summary of Stresses for Load Combinations Accident Conditions of Transport, Stress Point 15a (0.50 in. Wall Toroid)**

| Load Combination | Combination Index | Stress Intensity (psi) | |
|---|---|---|---|
| | | $P_m$ | $P_m + P_b$ |
| Free Drop 30 Foot - Top | 7a | 1.03E+04 | 1.02E+04 |
| Free Drop 30 Foot - Top | 7b | 1.03E+04 | 1.02E+04 |
| Free Drop 30 Foot - Top | 7c | 1.03E+04 | 1.02E+04 |
| Free Drop 30 Foot - Bottom | 7a | 3.96E+03 | 3.16E+03 |
| Free Drop 30 Foot - Bottom | 7b | 3.96E+03 | 3.16E+03 |
| Free Drop 30 Foot - Bottom | 7c | 3.96E+03 | 3.16E+03 |
| Free Drop 30 Foot - Side | 7a | 1.44E+04 | 8.43E+03 |
| Free Drop 30 Foot - Side | 7b | 1.44E+04 | 8.43E+03 |
| Free Drop 30 Foot - Side | 7c | 1.44E+04 | 8.43E+03 |
| Free Drop 30 Foot - CG | 7a | 2.21E+03 | 1.90E+03 |
| Free Drop 30 Foot - CG | 7b | 2.21E+03 | 1.90E+03 |
| Free Drop 30 Foot - CG | 7c | 2.21E+03 | 1.90E+03 |
| Puncture | 8a | 1.44E+04 | 8.43E+03 |
| Puncture | 8b | 1.44E+04 | 8.43E+03 |
| Puncture | 8c | 1.44E+04 | 8.43E+03 |
| Thermal Fire - t = 0.5 Hr | 9 | 8.90E+01 | 4.51E+01 |
| Thermal Fire - t = 1.0 Hr | 9 | 8.90E+01 | 4.51E+01 |
| Thermal Fire - t = 1.5 Hr | 9 | 4.51E+01 | 8.90E+01 |
| Thermal Fire - t = 2.0 Hr | 9 | 4.51E+01 | 8.90E+01 |
| Thermal Fire - t = 2.5 Hr | 9 | 4.51E+01 | 8.90E+01 |
| Thermal Fire - t = 3.0 Hr | 9 | 4.51E+01 | 8.90E+01 |
| Maximum Stress Intensity | | 1.44E+04 | 1.02E+04 |

NOTES:

1. Refer to Reference [2.2], corresponding Table 2.10.9.102.
2. $P_m < 2.4 \cdot S_m$ or $0.7 \cdot S_u = 44.8$ ksi
   $P_m + P_b < 3.6 \cdot S_m$ or $1.0 \cdot S_u = 64.4$ ksi
3. See Table 2.32 for combination index identification.

**Table 2.167. Summary of Stresses for Load Combinations Accident Conditions of Transport, Stress Point 15b (0.50 in. Wall Toroid)**

| Load Combination | Combination Index | Stress Intensity (psi) | |
|---|---|---|---|
| | | $P_m$ | $P_m + P_b$ |
| Free Drop 30 Foot - Top | 7a | 1.03E+04 | 1.02E+04 |
| Free Drop 30 Foot - Top | 7b | 1.03E+04 | 1.02E+04 |
| Free Drop 30 Foot - Top | 7c | 1.03E+04 | 1.02E+04 |
| Free Drop 30 Foot - Bottom | 7a | 3.96E+03 | 4.77E+03 |
| Free Drop 30 Foot - Bottom | 7b | 3.96E+03 | 4.77E+03 |
| Free Drop 30 Foot - Bottom | 7c | 3.96E+03 | 4.77E+03 |
| Free Drop 30 Foot - Side | 7a | 1.44E+04 | 2.72E+04 |
| Free Drop 30 Foot - Side | 7b | 1.44E+04 | 2.72E+04 |
| Free Drop 30 Foot - Side | 7c | 1.44E+04 | 2.72E+04 |
| Free Drop 30 Foot - CG | 7a | 2.21E+03 | 3.82E+03 |
| Free Drop 30 Foot - CG | 7b | 2.21E+03 | 3.82E+03 |
| Free Drop 30 Foot - CG | 7c | 2.21E+03 | 3.82E+03 |
| Puncture | 8a | 1.44E+04 | 2.72E+04 |
| Puncture | 8b | 1.44E+04 | 2.72E+04 |
| Puncture | 8c | 1.44E+04 | 2.72E+04 |
| Thermal Fire - t = 0.5 Hr | 9 | 8.90E+01 | 4.51E+01 |
| Thermal Fire - t = 1.0 Hr | 9 | 8.90E+01 | 4.51E+01 |
| Thermal Fire - t = 1.5 Hr | 9 | 4.51E+01 | 1.25E+01 |
| Thermal Fire - t = 2.0 Hr | 9 | 4.51E+01 | 1.25E+01 |
| Thermal Fire - t = 2.5 Hr | 9 | 4.51E+01 | 1.25E+01 |
| Thermal Fire - t = 3.0 Hr | 9 | 4.51E+01 | 1.25E+01 |
| Maximum Stress Intensity | | 1.44E+04 | 2.72E+04 |

NOTES:

1. Refer to Reference [2.2], corresponding Table 2.10.9.103.
2. $P_m < 2.4 \cdot S_m$ or $0.7 \cdot S_u = 44.8$ ksi
   $P_m + P_b < 3.6 \cdot S_m$ or $1.0 \cdot S_u = 64.4$ ksi
3. See Table 2.32 for combination index identification.

**Table 2.168. Summary of Stresses for Load Combinations Accident Conditions of Transport, Stress Point 16a (0.50 in. Wall Toroid)**

| Load Combination | Combination Index | Stress Intensity (psi) | |
|---|---|---|---|
| | | $P_m$ | $P_m + P_b$ |
| Free Drop 30 Foot - Top | 7a | 1.10E+04 | 9.20E+03 |
| Free Drop 30 Foot - Top | 7b | 1.10E+04 | 9.20E+03 |
| Free Drop 30 Foot - Top | 7c | 1.10E+04 | 9.20E+03 |
| Free Drop 30 Foot - Bottom | 7a | 5.71E+02 | 9.79E+02 |
| Free Drop 30 Foot - Bottom | 7b | 5.71E+02 | 9.79E+02 |
| Free Drop 30 Foot - Bottom | 7c | 5.71E+02 | 9.79E+02 |
| Free Drop 30 Foot - Side | 7a | 2.63E+03 | 7.29E+03 |
| Free Drop 30 Foot - Side | 7b | 2.63E+03 | 7.29E+03 |
| Free Drop 30 Foot - Side | 7c | 2.63E+03 | 7.29E+03 |
| Free Drop 30 Foot - CG | 7a | 2.08E+03 | 1.81E+03 |
| Free Drop 30 Foot - CG | 7b | 2.08E+03 | 1.81E+03 |
| Free Drop 30 Foot - CG | 7c | 2.08E+03 | 1.81E+03 |
| Puncture | 8a | 2.63E+03 | 7.29E+03 |
| Puncture | 8b | 2.63E+03 | 7.29E+03 |
| Puncture | 8c | 2.63E+03 | 7.29E+03 |
| Thermal Fire - t = 0.5 Hr | 9 | 6.34E+01 | 3.42E+01 |
| Thermal Fire - t = 1.0 Hr | 9 | 6.34E+01 | 3.42E+01 |
| Thermal Fire - t = 1.5 Hr | 9 | 3.42E+01 | 6.34E+01 |
| Thermal Fire - t = 2.0 Hr | 9 | 3.42E+01 | 6.34E+01 |
| Thermal Fire - t = 2.5 Hr | 9 | 3.42E+01 | 6.34E+01 |
| Thermal Fire - t = 3.0 Hr | 9 | 3.42E+01 | 6.34E+01 |
| Maximum Stress Intensity | | 1.10E+04 | 9.20E+03 |

NOTES:

1. Refer to Reference [2.2], corresponding Table 2.10.9.104.
2. $P_m < 2.4 \cdot S_m$ or $0.7 \cdot S_u = 44.8$ ksi
   $P_m + P_b < 3.6 \cdot S_m$ or $1.0 \cdot S_u = 64.4$ ksi
3. See Table 2.32 for combination index identification.

**Table 2.169. Summary of Stresses for Load Combinations Accident Conditions of Transport, Stress Point 16b (0.50 in. Wall Toroid)**

| Load Combination | Combination Index | Stress Intensity (psi) | |
|---|---|---|---|
| | | $P_m$ | $P_m + P_b$ |
| Free Drop 30 Foot - Top | 7a | 1.10E+04 | 1.28E+04 |
| Free Drop 30 Foot - Top | 7b | 1.10E+04 | 1.28E+04 |
| Free Drop 30 Foot - Top | 7c | 1.10E+04 | 1.28E+04 |
| Free Drop 30 Foot - Bottom | 7a | 5.71E+02 | 3.15E+02 |
| Free Drop 30 Foot - Bottom | 7b | 5.71E+02 | 3.15E+02 |
| Free Drop 30 Foot - Bottom | 7c | 5.71E+02 | 3.15E+02 |
| Free Drop 30 Foot - Side | 7a | 2.63E+03 | 4.95E+03 |
| Free Drop 30 Foot - Side | 7b | 2.63E+03 | 4.95E+03 |
| Free Drop 30 Foot - Side | 7c | 2.63E+03 | 4.95E+03 |
| Free Drop 30 Foot - CG | 7a | 2.08E+03 | 2.97E+03 |
| Free Drop 30 Foot - CG | 7b | 2.08E+03 | 2.97E+03 |
| Free Drop 30 Foot - CG | 7c | 2.08E+03 | 2.97E+03 |
| Puncture | 8a | 2.63E+03 | 4.95E+03 |
| Puncture | 8b | 2.63E+03 | 4.95E+03 |
| Puncture | 8c | 2.63E+03 | 4.95E+03 |
| Thermal Fire - t = 0.5 Hr | 9 | 6.92E+00 | 3.42E+01 |
| Thermal Fire - t = 1.0 Hr | 9 | 6.92E+00 | 3.42E+01 |
| Thermal Fire - t = 1.5 Hr | 9 | 3.42E+01 | 6.92E+00 |
| Thermal Fire - t = 2.0 Hr | 9 | 3.42E+01 | 6.92E+00 |
| Thermal Fire - t = 2.5 Hr | 9 | 3.42E+01 | 6.92E+00 |
| Thermal Fire - t = 3.0 Hr | 9 | 3.42E+01 | 6.92E+00 |
| Maximum Stress Intensity | | 1.10E+04 | 1.28E+04 |

NOTES:

1. Refer to Reference [2.2], corresponding Table 2.10.9.105.
2. $P_m < 2.4 \cdot S_m$ or $0.7 \cdot S_u = 44.8$ ksi
   $P_m + P_b < 3.6 \cdot S_m$ or $1.0 \cdot S_u = 64.4$ ksi
3. See Table 2.32 for combination index identification.

**Table 2.170. Summary of Stresses for Load Combinations Accident Conditions of Transport, Stress Point 17 (0.50 in. Wall Toroid)**

| Load Combination | Combination Index | Stress Intensity (psi) | |
|---|---|---|---|
| | | $P_m$ | $P_m + P_b$ |
| Free Drop 30 Foot - Top | 7a | 8.44E+03 | 8.44E+03 |
| Free Drop 30 Foot - Top | 7b | 8.44E+03 | 8.44E+03 |
| Free Drop 30 Foot - Top | 7c | 8.44E+03 | 8.44E+03 |
| Free Drop 30 Foot - Bottom | 7a | 5.11E+02 | 5.11E+02 |
| Free Drop 30 Foot - Bottom | 7b | 5.11E+02 | 5.11E+02 |
| Free Drop 30 Foot - Bottom | 7c | 5.11E+02 | 5.11E+02 |
| Free Drop 30 Foot - Side | 7a | 2.58E+03 | 2.58E+03 |
| Free Drop 30 Foot - Side | 7b | 2.58E+03 | 2.58E+03 |
| Free Drop 30 Foot - Side | 7c | 2.58E+03 | 2.58E+03 |
| Free Drop 30 Foot - CG | 7a | 2.56E+03 | 2.56E+03 |
| Free Drop 30 Foot - CG | 7b | 2.56E+03 | 2.56E+03 |
| Free Drop 30 Foot - CG | 7c | 2.56E+03 | 2.56E+03 |
| Puncture | 8a | 2.58E+03 | 2.58E+03 |
| Puncture | 8b | 2.58E+03 | 2.58E+03 |
| Puncture | 8c | 2.58E+03 | 2.58E+03 |
| Thermal Fire - t = 0.5 Hr | 9 | 7.28E+01 | 7.28E+01 |
| Thermal Fire - t = 1.0 Hr | 9 | 7.28E+01 | 7.28E+01 |
| Thermal Fire - t = 1.5 Hr | 9 | 7.28E+01 | 7.28E+01 |
| Thermal Fire - t = 2.0 Hr | 9 | 7.28E+01 | 7.28E+01 |
| Thermal Fire - t = 2.5 Hr | 9 | 7.28E+01 | 7.28E+01 |
| Thermal Fire - t = 3.0 Hr | 9 | 7.28E+01 | 7.28E+01 |
| Maximum Stress Intensity | | 8.44E+03 | 8.44E+03 |

NOTES:

1. Refer to Reference [2.2], corresponding Table 2.10.9.106.
2. $P_m < 2.4 \cdot S_m$ or $0.7 \cdot S_u = 44.8$ ksi
   $P_m + P_b < 3.6 \cdot S_m$ or $1.0 \cdot S_u = 64.4$ ksi
3. See Table 2.32 for combination index identification.
4. Stresses are given at the centroid of the element, therefore, the same stress value is used for $P_m$ and $P_m + P_b$.

**Table 2.171. Summary of Stresses for Load Combinations Accident Conditions of Transport, Stress Point 18 (0.50 in. Wall Toroid)**

| Load Combination | Combination Index | Stress Intensity (psi) | |
|---|---|---|---|
| | | $P_m$ | $P_m + P_b$ |
| Free Drop 30 Foot - Top | 7a | 8.14E+03 | 8.14E+03 |
| Free Drop 30 Foot - Top | 7b | 8.14E+03 | 8.14E+03 |
| Free Drop 30 Foot - Top | 7c | 8.14E+03 | 8.14E+03 |
| Free Drop 30 Foot - Bottom | 7a | 1.20E+02 | 1.20E+02 |
| Free Drop 30 Foot - Bottom | 7b | 1.20E+02 | 1.20E+02 |
| Free Drop 30 Foot - Bottom | 7c | 1.20E+02 | 1.20E+02 |
| Free Drop 30 Foot - Side | 7a | 4.47E+03 | 4.47E+03 |
| Free Drop 30 Foot - Side | 7b | 4.47E+03 | 4.47E+03 |
| Free Drop 30 Foot - Side | 7c | 4.47E+03 | 4.47E+03 |
| Free Drop 30 Foot - CG | 7a | 3.48E+03 | 3.48E+03 |
| Free Drop 30 Foot - CG | 7b | 3.48E+03 | 3.48E+03 |
| Free Drop 30 Foot - CG | 7c | 3.48E+03 | 3.48E+03 |
| Puncture | 8a | 4.47E+03 | 4.47E+03 |
| Puncture | 8b | 4.47E+03 | 4.47E+03 |
| Puncture | 8c | 4.47E+03 | 4.47E+03 |
| Thermal Fire - t = 0.5 Hr | 9 | 1.27E+01 | 1.27E+01 |
| Thermal Fire - t = 1.0 Hr | 9 | 1.27E+01 | 1.27E+01 |
| Thermal Fire - t = 1.5 Hr | 9 | 1.27E+01 | 1.27E+01 |
| Thermal Fire - t = 2.0 Hr | 9 | 1.27E+01 | 1.27E+01 |
| Thermal Fire - t = 2.5 Hr | 9 | 1.27E+01 | 1.27E+01 |
| Thermal Fire - t = 3.0 Hr | 9 | 1.27E+01 | 1.27E+01 |
| Maximum Stress Intensity | | 8.14E+03 | 8.14E+03 |

NOTES:

1. Refer to Reference [2.2], corresponding Table 2.10.9.107.
2. $P_m < 2.4 \cdot S_m$ or $0.7 \cdot S_u = 44.8$ ksi
   $P_m + P_b < 3.6 \cdot S_m$ or $1.0 \cdot S_u = 64.4$ ksi
3. See Table 2.32 for combination index identification.
4. Stresses are given at the centroid of the element, therefore, the same stress value is used for $P_m$ and $P_m + P_b$.

**Table 2.172. Summary of Stresses for Load Combinations Accident Conditions of Transport, Stress Point 19 (0.50 in. Wall Toroid)**

| Load Combination | Combination Index | Stress Intensity (psi) | |
|---|---|---|---|
| | | $P_m$ | $P_m + P_b$ |
| Free Drop 30 Foot - Top | 7a | 1.03E+04 | 1.03E+04 |
| Free Drop 30 Foot - Top | 7b | 1.03E+04 | 1.03E+04 |
| Free Drop 30 Foot - Top | 7c | 1.03E+04 | 1.03E+04 |
| Free Drop 30 Foot - Bottom | 7a | 7.46E+01 | 7.46E+01 |
| Free Drop 30 Foot - Bottom | 7b | 7.46E+01 | 7.46E+01 |
| Free Drop 30 Foot - Bottom | 7c | 7.46E+01 | 7.46E+01 |
| Free Drop 30 Foot - Side | 7a | 2.15E+03 | 2.15E+03 |
| Free Drop 30 Foot - Side | 7b | 2.15E+03 | 2.15E+03 |
| Free Drop 30 Foot - Side | 7c | 2.15E+03 | 2.15E+03 |
| Free Drop 30 Foot - CG | 7a | 5.86E+03 | 5.86E+03 |
| Free Drop 30 Foot - CG | 7b | 5.86E+03 | 5.86E+03 |
| Free Drop 30 Foot - CG | 7c | 5.86E+03 | 5.86E+03 |
| Puncture | 8a | 2.15E+03 | 2.15E+03 |
| Puncture | 8b | 2.15E+03 | 2.15E+03 |
| Puncture | 8c | 2.15E+03 | 2.15E+03 |
| Thermal Fire - t = 0.5 Hr | 9 | 1.45E+01 | 1.45E+01 |
| Thermal Fire - t = 1.0 Hr | 9 | 1.45E+01 | 1.45E+01 |
| Thermal Fire - t = 1.5 Hr | 9 | 1.45E+01 | 1.45E+01 |
| Thermal Fire - t = 2.0 Hr | 9 | 1.45E+01 | 1.45E+01 |
| Thermal Fire - t = 2.5 Hr | 9 | 1.45E+01 | 1.45E+01 |
| Thermal Fire - t = 3.0 Hr | 9 | 1.45E+01 | 1.45E+01 |
| Maximum Stress Intensity | | 1.03E+04 | 1.03E+04 |

NOTES:

1. Refer to Reference [2.2], corresponding Table 2.10.9.108.
2. $P_m < 2.4 \cdot S_m$ or $0.7 \cdot S_u = 44.8$ ksi
   $P_m + P_b < 3.6 \cdot S_m$ or $1.0 \cdot S_u = 64.4$ ksi
3. See Table 2.32 for combination index identification.
4. Stresses are given at the centroid of the element, therefore, the same stress value is used for $P_m$ and $P_m + P_b$.

**Table 2.173. Summary of Stresses for Load Combinations Accident Conditions of Transport, Stress Point 20 (0.50 in. Wall Toroid)**

| Load Combination | Combination Index | Stress Intensity (psi) | |
|---|---|---|---|
| | | $P_m$ | $P_m + P_b$ |
| Free Drop 30 Foot - Top | 7a | 1.51E+04 | 1.51E+04 |
| Free Drop 30 Foot - Top | 7b | 1.51E+04 | 1.51E+04 |
| Free Drop 30 Foot - Top | 7c | 1.51E+04 | 1.51E+04 |
| Free Drop 30 Foot - Bottom | 7a | 7.36E+01 | 7.36E+01 |
| Free Drop 30 Foot - Bottom | 7b | 7.36E+01 | 7.36E+01 |
| Free Drop 30 Foot - Bottom | 7c | 7.36E+01 | 7.36E+01 |
| Free Drop 30 Foot - Side | 7a | 9.79E+02 | 9.79E+02 |
| Free Drop 30 Foot - Side | 7b | 9.79E+02 | 9.79E+02 |
| Free Drop 30 Foot - Side | 7c | 9.79E+02 | 9.79E+02 |
| Free Drop 30 Foot - CG | 7a | 3.44E+03 | 3.44E+03 |
| Free Drop 30 Foot - CG | 7b | 3.44E+03 | 3.44E+03 |
| Free Drop 30 Foot - CG | 7c | 3.44E+03 | 3.44E+03 |
| Puncture | 8a | 9.79E+02 | 9.79E+02 |
| Puncture | 8b | 9.79E+02 | 9.79E+02 |
| Puncture | 8c | 9.79E+02 | 9.79E+02 |
| Thermal Fire - t = 0.5 Hr | 9 | 8.74E+00 | 8.74E+00 |
| Thermal Fire - t = 1.0 Hr | 9 | 8.74E+00 | 8.74E+00 |
| Thermal Fire - t = 1.5 Hr | 9 | 8.74E+00 | 8.74E+00 |
| Thermal Fire - t = 2.0 Hr | 9 | 8.74E+00 | 8.74E+00 |
| Thermal Fire - t = 2.5 Hr | 9 | 8.74E+00 | 8.74E+00 |
| Thermal Fire - t = 3.0 Hr | 9 | 8.74E+00 | 8.74E+00 |
| Maximum Stress Intensity | | 1.51E+04 | 1.51E+04 |

NOTES:

1. Refer to Reference [2.2], corresponding Table 2.10.9.109.
2. $P_m < 2.4 \cdot S_m$ or $0.7 \cdot S_u = 44.8$ ksi
   $P_m + P_b < 3.6 \cdot S_m$ or $1.0 \cdot S_u = 64.4$ ksi
3. See Table 2.32 for combination index identification.
4. Stresses are given at the centroid of the element, therefore, the same stress value is used for $P_m$ and $P_m + P_b$.

**Table 2.174. Summary of Stresses for Load Combinations Accident Conditions of Transport, Stress Point 21 (0.50 in. Wall Toroid)**

| Load Combination | Combination Index | Stress Intensity (psi) | |
|---|---|---|---|
| | | $P_m$ | $P_m + P_b$ |
| Free Drop 30 Foot - Top | 7a | 1.73E+04 | 1.73E+04 |
| Free Drop 30 Foot - Top | 7b | 1.73E+04 | 1.73E+04 |
| Free Drop 30 Foot - Top | 7c | 1.73E+04 | 1.73E+04 |
| Free Drop 30 Foot - Bottom | 7a | 1.00E+03 | 1.00E+03 |
| Free Drop 30 Foot - Bottom | 7b | 1.00E+03 | 1.00E+03 |
| Free Drop 30 Foot - Bottom | 7c | 1.00E+03 | 1.00E+03 |
| Free Drop 30 Foot - Side | 7a | 2.45E+02 | 2.45E+02 |
| Free Drop 30 Foot - Side | 7b | 2.45E+02 | 2.45E+02 |
| Free Drop 30 Foot - Side | 7c | 2.45E+02 | 2.45E+02 |
| Free Drop 30 Foot - CG | 7a | 2.35E+02 | 2.35E+02 |
| Free Drop 30 Foot - CG | 7b | 2.35E+02 | 2.35E+02 |
| Free Drop 30 Foot - CG | 7c | 2.35E+02 | 2.35E+02 |
| Puncture | 8a | 2.45E+02 | 2.45E+02 |
| Puncture | 8b | 2.45E+02 | 2.45E+02 |
| Puncture | 8c | 2.45E+02 | 2.45E+02 |
| Thermal Fire - t = 0.5 Hr | 9 | 1.08E+02 | 1.08E+02 |
| Thermal Fire - t = 1.0 Hr | 9 | 1.08E+02 | 1.08E+02 |
| Thermal Fire - t = 1.5 Hr | 9 | 1.08E+02 | 1.08E+02 |
| Thermal Fire - t = 2.0 Hr | 9 | 1.08E+02 | 1.08E+02 |
| Thermal Fire - t = 2.5 Hr | 9 | 1.08E+02 | 1.08E+02 |
| Thermal Fire - t = 3.0 Hr | 9 | 1.08E+02 | 1.08E+02 |
| Maximum Stress Intensity | | 1.73E+04 | 1.73E+04 |

NOTES:

1. Refer to Reference [2.2], corresponding Table 2.10.9.110.
2. $P_m < 2.4 \cdot S_m$ or $0.7 \cdot S_u = 44.8$ ksi
   $P_m + P_b < 3.6 \cdot S_m$ or $1.0 \cdot S_u = 64.4$ ksi
3. See Table 2.32 for combination index identification.
4. Stresses are given at the centroid of the element, therefore, the same stress value is used for $P_m$ and $P_m + P_b$.

**Table 2.175. Summary of Stresses for Load Combinations Accident Conditions of Transport, Stress Point 22 (0.50 in. Wall Toroid)**

| Load Combination | Combination Index | Stress Intensity (psi) | |
|---|---|---|---|
| | | $P_m$ | $P_m + P_b$ |
| Free Drop 30 Foot - Top | 7a | 5.17E+03 | 5.17E+03 |
| Free Drop 30 Foot - Top | 7b | 5.17E+03 | 5.17E+03 |
| Free Drop 30 Foot - Top | 7c | 5.17E+03 | 5.17E+03 |
| Free Drop 30 Foot - Bottom | 7a | 9.49E+02 | 9.49E+02 |
| Free Drop 30 Foot - Bottom | 7b | 9.49E+02 | 9.49E+02 |
| Free Drop 30 Foot - Bottom | 7c | 9.49E+02 | 9.49E+02 |
| Free Drop 30 Foot - Side | 7a | 4.49E+02 | 4.49E+02 |
| Free Drop 30 Foot - Side | 7b | 4.49E+02 | 4.49E+02 |
| Free Drop 30 Foot - Side | 7c | 4.49E+02 | 4.49E+02 |
| Free Drop 30 Foot - CG | 7a | 4.23E+02 | 4.23E+02 |
| Free Drop 30 Foot - CG | 7b | 4.23E+02 | 4.23E+02 |
| Free Drop 30 Foot - CG | 7c | 4.23E+02 | 4.23E+02 |
| Puncture | 8a | 4.49E+02 | 4.49E+02 |
| Puncture | 8b | 4.49E+02 | 4.49E+02 |
| Puncture | 8c | 4.49E+02 | 4.49E+02 |
| Thermal Fire - t = 0.5 Hr | 9 | 1.90E+02 | 1.90E+02 |
| Thermal Fire - t = 1.0 Hr | 9 | 1.90E+02 | 1.90E+02 |
| Thermal Fire - t = 1.5 Hr | 9 | 1.90E+02 | 1.90E+02 |
| Thermal Fire - t = 2.0 Hr | 9 | 1.90E+02 | 1.90E+02 |
| Thermal Fire - t = 2.5 Hr | 9 | 1.90E+02 | 1.90E+02 |
| Thermal Fire - t = 3.0 Hr | 9 | 1.90E+02 | 1.90E+02 |
| Maximum Stress Intensity | | 5.17E+03 | 5.17E+03 |

NOTES:

1. Refer to Reference [2.2], corresponding Table 2.10.9.111.
2. $P_m < 2.4 \cdot S_m$ or $0.7 \cdot S_u = 44.8$ ksi
   $P_m + P_b < 3.6 \cdot S_m$ or $1.0 \cdot S_u = 64.4$ ksi
3. See Table 2.32 for combination index identification.
4. Stresses are given at the centroid of the element, therefore, the same stress value is used for $P_m$ and $P_m + P_b$.

**Table 2.176. Summary of Stresses for Load Combinations Accident Conditions of Transport, Stress Point 23 (0.50 in. Wall Toroid)**

| Load Combination | Combination Index | Stress Intensity (psi) | |
|---|---|---|---|
| | | $P_m$ | $P_m + P_b$ |
| Free Drop 30 Foot - Top | 7a | 4.24E+03 | 4.24E+03 |
| Free Drop 30 Foot - Top | 7b | 4.24E+03 | 4.24E+03 |
| Free Drop 30 Foot - Top | 7c | 4.24E+03 | 4.24E+03 |
| Free Drop 30 Foot - Bottom | 7a | 7.26E+02 | 7.26E+02 |
| Free Drop 30 Foot - Bottom | 7b | 7.26E+02 | 7.26E+02 |
| Free Drop 30 Foot - Bottom | 7c | 7.26E+02 | 7.26E+02 |
| Free Drop 30 Foot - Side | 7a | 1.23E+02 | 1.23E+02 |
| Free Drop 30 Foot - Side | 7b | 1.23E+02 | 1.23E+02 |
| Free Drop 30 Foot - Side | 7c | 1.23E+02 | 1.23E+02 |
| Free Drop 30 Foot - CG | 7a | 2.99E+02 | 2.99E+02 |
| Free Drop 30 Foot - CG | 7b | 2.99E+02 | 2.99E+02 |
| Free Drop 30 Foot - CG | 7c | 2.99E+02 | 2.99E+02 |
| Puncture | 8a | 1.23E+02 | 1.23E+02 |
| Puncture | 8b | 1.23E+02 | 1.23E+02 |
| Puncture | 8c | 1.23E+02 | 1.23E+02 |
| Thermal Fire - t = 0.5 Hr | 9 | 8.36E+00 | 8.36E+00 |
| Thermal Fire - t = 1.0 Hr | 9 | 8.36E+00 | 8.36E+00 |
| Thermal Fire - t = 1.5 Hr | 9 | 8.36E+00 | 8.36E+00 |
| Thermal Fire - t = 2.0 Hr | 9 | 8.36E+00 | 8.36E+00 |
| Thermal Fire - t = 2.5 Hr | 9 | 8.36E+00 | 8.36E+00 |
| Thermal Fire - t = 3.0 Hr | 9 | 8.36E+00 | 8.36E+00 |
| Maximum Stress Intensity | | 4.24E+03 | 4.24E+03 |

NOTES:

1. Refer to Reference [2.2], corresponding Table 2.10.9.112.
2. $P_m < 2.4 \cdot S_m$ or $0.7 \cdot S_u = 44.8$ ksi
   $P_m + P_b < 3.6 \cdot S_m$ or $1.0 \cdot S_u = 64.4$ ksi
3. See Table 2.32 for combination index identification.
4. Stresses are given at the centroid of the element, therefore, the same stress value is used for $P_m$ and $P_m + P_b$.

**Table 2.177. Summary of Stresses for Load Combinations Accident Conditions of Transport, Stress Point 24 (0.50 in. Wall Toroid)**

| Load Combination | Combination Index | Stress Intensity (psi) | |
|---|---|---|---|
| | | $P_m$ | $P_m + P_b$ |
| Free Drop 30 Foot - Top | 7a | 8.57E+03 | 8.57E+03 |
| Free Drop 30 Foot - Top | 7b | 8.57E+03 | 8.57E+03 |
| Free Drop 30 Foot - Top | 7c | 8.57E+03 | 8.57E+03 |
| Free Drop 30 Foot - Bottom | 7a | 1.72E+03 | 1.72E+03 |
| Free Drop 30 Foot - Bottom | 7b | 1.72E+03 | 1.72E+03 |
| Free Drop 30 Foot - Bottom | 7c | 1.72E+03 | 1.72E+03 |
| Free Drop 30 Foot - Side | 7a | 2.49E+03 | 2.49E+03 |
| Free Drop 30 Foot - Side | 7b | 2.49E+03 | 2.49E+03 |
| Free Drop 30 Foot - Side | 7c | 2.49E+03 | 2.49E+03 |
| Free Drop 30 Foot - CG | 7a | 3.40E+03 | 3.40E+03 |
| Free Drop 30 Foot - CG | 7b | 3.40E+03 | 3.40E+03 |
| Free Drop 30 Foot - CG | 7c | 3.40E+03 | 3.40E+03 |
| Puncture | 8a | 2.49E+03 | 2.49E+03 |
| Puncture | 8b | 2.49E+03 | 2.49E+03 |
| Puncture | 8c | 2.49E+03 | 2.49E+03 |
| Thermal Fire - t = 0.5 Hr | 9 | 8.57E+01 | 8.57E+01 |
| Thermal Fire - t = 1.0 Hr | 9 | 8.57E+01 | 8.57E+01 |
| Thermal Fire - t = 1.5 Hr | 9 | 8.57E+01 | 8.57E+01 |
| Thermal Fire - t = 2.0 Hr | 9 | 8.57E+01 | 8.57E+01 |
| Thermal Fire - t = 2.5 Hr | 9 | 8.57E+01 | 8.57E+01 |
| Thermal Fire - t = 3.0 Hr | 9 | 8.57E+01 | 8.57E+01 |
| Maximum Stress Intensity | | 8.57E+03 | 8.57E+03 |

NOTES:

1. Refer to Reference [2.2], corresponding Table 2.10.9.113.
2. $P_m < 2.4 \cdot S_m$ or $0.7 \cdot S_u = 44.8$ ksi
   $P_m + P_b < 3.6 \cdot S_m$ or $1.0 \cdot S_u = 64.4$ ksi
3. See Table 2.32 for combination index identification.
4. Stresses are given at the centroid of the element, therefore, the same stress value is used for $P_m$ and $P_m + P_b$.

**Table 2.178. Summary of Stresses for Load Combinations Accident Conditions of Transport, Stress Point 25 (0.50 in. Wall Toroid)**

| Load Combination | Combination Index | Stress Intensity (psi) | |
|---|---|---|---|
| | | $P_m$ | $P_m + P_b$ |
| Free Drop 30 Foot - Top | 7a | 9.71E+03 | 9.71E+03 |
| Free Drop 30 Foot - Top | 7b | 9.71E+03 | 9.71E+03 |
| Free Drop 30 Foot - Top | 7c | 9.71E+03 | 9.71E+03 |
| Free Drop 30 Foot - Bottom | 7a | 1.78E+03 | 1.78E+03 |
| Free Drop 30 Foot - Bottom | 7b | 1.78E+03 | 1.78E+03 |
| Free Drop 30 Foot - Bottom | 7c | 1.78E+03 | 1.78E+03 |
| Free Drop 30 Foot - Side | 7a | 1.38E+04 | 1.38E+04 |
| Free Drop 30 Foot - Side | 7b | 1.38E+04 | 1.38E+04 |
| Free Drop 30 Foot - Side | 7c | 1.38E+04 | 1.38E+04 |
| Free Drop 30 Foot - CG | 7a | 5.22E+03 | 5.22E+03 |
| Free Drop 30 Foot - CG | 7b | 5.22E+03 | 5.22E+03 |
| Free Drop 30 Foot - CG | 7c | 5.22E+03 | 5.22E+03 |
| Puncture | 8a | 1.38E+04 | 1.38E+04 |
| Puncture | 8b | 1.38E+04 | 1.38E+04 |
| Puncture | 8c | 1.38E+04 | 1.38E+04 |
| Thermal Fire - t = 0.5 Hr | 9 | 5.73E+01 | 5.73E+01 |
| Thermal Fire - t = 1.0 Hr | 9 | 5.73E+01 | 5.73E+01 |
| Thermal Fire - t = 1.5 Hr | 9 | 5.73E+01 | 5.73E+01 |
| Thermal Fire - t = 2.0 Hr | 9 | 5.73E+01 | 5.73E+01 |
| Thermal Fire - t = 2.5 Hr | 9 | 5.73E+01 | 5.73E+01 |
| Thermal Fire - t = 3.0 Hr | 9 | 5.73E+01 | 5.73E+01 |
| Maximum Stress Intensity | | 1.38E+04 | 1.38E+04 |

NOTES:

1. Refer to Reference [2.2], corresponding Table 2.10.9.114.
2. $P_m < 2.4 \cdot S_m$ or $0.7 \cdot S_u = 44.8$ ksi
   $P_m + P_b < 3.6 \cdot S_m$ or $1.0 \cdot S_u = 64.4$ ksi
3. See Table 2.32 for combination index identification.
4. Stresses are given at the centroid of the element, therefore, the same stress value is used for $P_m$ and $P_m + P_b$.

**Table 2.179. Summary of Stresses for Load Combinations Accident Conditions of Transport, Stress Point 26 (0.50 in. Wall Toroid)**

| Load Combination | Combination Index | Stress Intensity (psi) | |
|---|---|---|---|
| | | $P_m$ | $P_m + P_b$ |
| Free Drop 30 Foot - Top | 7a | 6.16E+03 | 6.16E+03 |
| Free Drop 30 Foot - Top | 7b | 6.16E+03 | 6.16E+03 |
| Free Drop 30 Foot - Top | 7c | 6.16E+03 | 6.16E+03 |
| Free Drop 30 Foot - Bottom | 7a | 5.95E+02 | 5.95E+02 |
| Free Drop 30 Foot - Bottom | 7b | 5.95E+02 | 5.95E+02 |
| Free Drop 30 Foot - Bottom | 7c | 5.95E+02 | 5.95E+02 |
| Free Drop 30 Foot - Side | 7a | 5.89E+03 | 5.89E+03 |
| Free Drop 30 Foot - Side | 7b | 5.89E+03 | 5.89E+03 |
| Free Drop 30 Foot - Side | 7c | 5.89E+03 | 5.89E+03 |
| Free Drop 30 Foot - CG | 7a | 1.09E+03 | 1.09E+03 |
| Free Drop 30 Foot - CG | 7b | 1.09E+03 | 1.09E+03 |
| Free Drop 30 Foot - CG | 7c | 1.09E+03 | 1.09E+03 |
| Puncture | 8a | 5.89E+03 | 5.89E+03 |
| Puncture | 8b | 5.89E+03 | 5.89E+03 |
| Puncture | 8c | 5.89E+03 | 5.89E+03 |
| Thermal Fire - t = 0.5 Hr | 9 | 3.85E+01 | 3.85E+01 |
| Thermal Fire - t = 1.0 Hr | 9 | 3.85E+01 | 3.85E+01 |
| Thermal Fire - t = 1.5 Hr | 9 | 3.85E+01 | 3.85E+01 |
| Thermal Fire - t = 2.0 Hr | 9 | 3.85E+01 | 3.85E+01 |
| Thermal Fire - t = 2.5 Hr | 9 | 3.85E+01 | 3.85E+01 |
| Thermal Fire - t = 3.0 Hr | 9 | 3.85E+01 | 3.85E+01 |
| Maximum Stress Intensity | | 6.16E+03 | 6.16E+03 |

NOTES:

1. Refer to Reference [2.2], corresponding Table 2.10.9.115.
2. $P_m < 2.4 \cdot S_m$ or $0.7 \cdot S_u = 44.8$ ksi
   $P_m + P_b < 3.6 \cdot S_m$ or $1.0 \cdot S_u = 64.4$ ksi
3. See Table 2.32 for combination index identification.
4. Stresses are given at the centroid of the element, therefore, the same stress value is used for $P_m$ and $P_m + P_b$.

**Table 2.180. Summary of Stresses for Load Combinations Accident Conditions of Transport, Stress Point 27 (0.50 in. Wall Toroid)**

| Load Combination | Combination Index | Stress Intensity (psi) | |
|---|---|---|---|
| | | $P_m$ | $P_m + P_b$ |
| Free Drop 30 Foot - Top | 7a | 5.40E+03 | 5.40E+03 |
| Free Drop 30 Foot - Top | 7b | 5.40E+03 | 5.40E+03 |
| Free Drop 30 Foot - Top | 7c | 5.40E+03 | 5.40E+03 |
| Free Drop 30 Foot - Bottom | 7a | 4.38E+02 | 4.38E+02 |
| Free Drop 30 Foot - Bottom | 7b | 4.38E+02 | 4.38E+02 |
| Free Drop 30 Foot - Bottom | 7c | 4.38E+02 | 4.38E+02 |
| Free Drop 30 Foot - Side | 7a | 6.12E+03 | 6.12E+03 |
| Free Drop 30 Foot - Side | 7b | 6.12E+03 | 6.12E+03 |
| Free Drop 30 Foot - Side | 7c | 6.12E+03 | 6.12E+03 |
| Free Drop 30 Foot - CG | 7a | 9.63E+02 | 9.63E+02 |
| Free Drop 30 Foot - CG | 7b | 9.63E+02 | 9.63E+02 |
| Free Drop 30 Foot - CG | 7c | 9.63E+02 | 9.63E+02 |
| Puncture | 8a | 6.12E+03 | 6.12E+03 |
| Puncture | 8b | 6.12E+03 | 6.12E+03 |
| Puncture | 8c | 6.12E+03 | 6.12E+03 |
| Thermal Fire - t = 0.5 Hr | 9 | 6.98E+01 | 6.98E+01 |
| Thermal Fire - t = 1.0 Hr | 9 | 6.98E+01 | 6.98E+01 |
| Thermal Fire - t = 1.5 Hr | 9 | 6.98E+01 | 6.98E+01 |
| Thermal Fire - t = 2.0 Hr | 9 | 6.98E+01 | 6.98E+01 |
| Thermal Fire - t = 2.5 Hr | 9 | 6.98E+01 | 6.98E+01 |
| Thermal Fire - t = 3.0 Hr | 9 | 6.98E+01 | 6.98E+01 |
| Maximum Stress Intensity | | 6.12E+03 | 6.12E+03 |

NOTES:

1. Refer to Reference [2.2], corresponding Table 2.10.9.116.
2. $P_m < 2.4 \cdot S_m$ or $0.7 \cdot S_u = 44.8$ ksi
   $P_m + P_b < 3.6 \cdot S_m$ or $1.0 \cdot S_u = 64.4$ ksi
3. See Table 2.32 for combination index identification.
4. Stresses are given at the centroid of the element, therefore, the same stress value is used for $P_m$ and $P_m + P_b$.

### 2.11.4 Multifunctional Rack Structural Evaluation

**2.11.4.1 Discussion.** The Multifunctional rack consists of several SS304 horizontal circular plates welded together to a SS304 central cylindrical tubing to form single or two stackable structure. These plates are further secured by eighteen SS304 tubes in between each one of them. Various types of materials in a form of cylindrical tubing are seated through the holes provided in the circular plates. The following evaluation only considers the upper stackable section of the Multifunctional rack. Paragraph 2.11.4.11 addresses the reasons for this selection. The detailed design of each component is shown in the drawing included in Appendix 1.4.1. The total weight of the Multifunctional rack including materials is less than the allowable payload weight (5450 lbs) of the Model 2000 Package.

Normal Operating Condition

a) 100°F ambient temperature with maximum decay heat with insolation

b) -20°F ambient temperature with maximum decay heat

**2.11.4.2 General Description of the Finite Element Model.** Since the arrangement of materials and the support pipes are non-axisymmetric and form an important part of the structure, a full 3-D finite element model is constructed for structural analyses. Since both racks are similar in structure, only one rack is modeled. Furthermore, due to symmetry, only one half the real structure is modeled. During all drop conditions, weight of the other rack with the materials are simulated by weight loading.

The circular plates and the center cylinder are modeled with four-node quadrilateral elements, while the plate support pipes are modeled with two-node 3-D beam elements. The materials are included in the model as a form of weight loading so that they do not provide any added stiffness to the structure. The same finite element model is used throughout for all loading conditions for both normal and accident conditions. See Figures 2.44 and 2.45 for the finite element model.

A detailed description of the loading and boundary conditions used is further discussed in the Paragraphs 2.11.4.5 and 2.11.4.8 describing each loading condition analyzed. For dimensions and various interfaces discussed in this Subsection, refer to the GE Certification Drawing, "Multifunctional Rack", 105E9555, Appendix 1.4.1

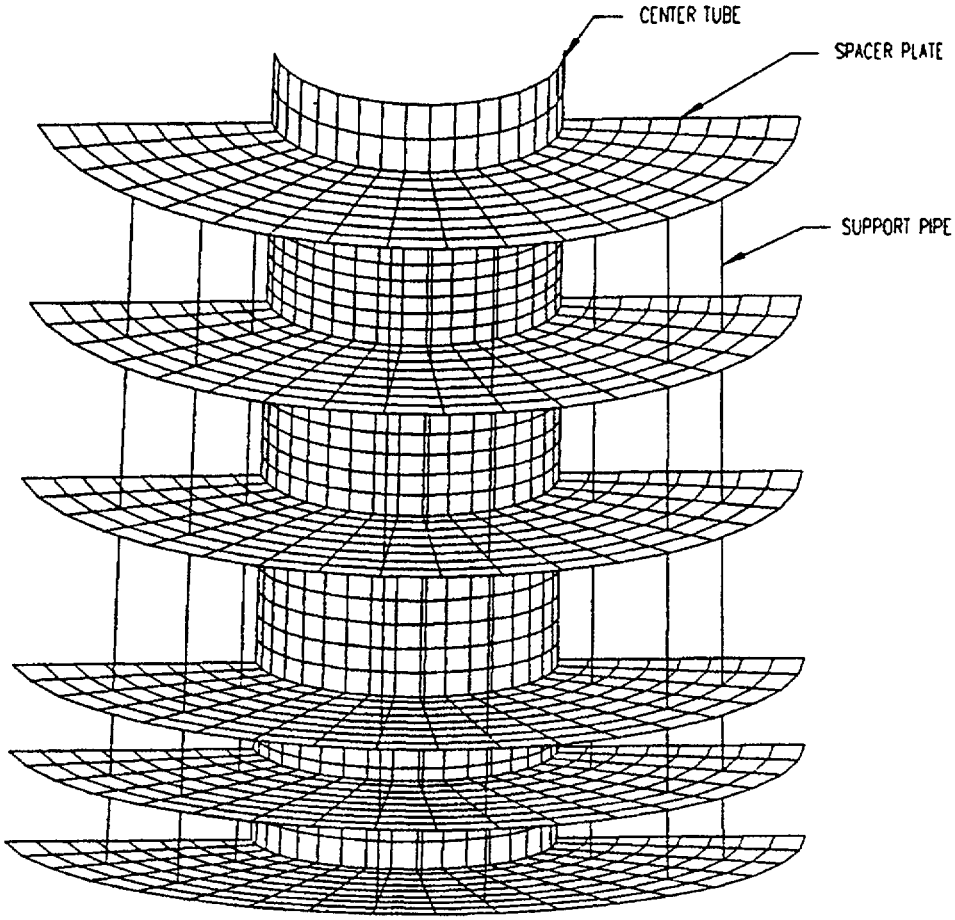


**Figure 2.44. Multifunctional Rack Finite Element Model, Normal Configuration**

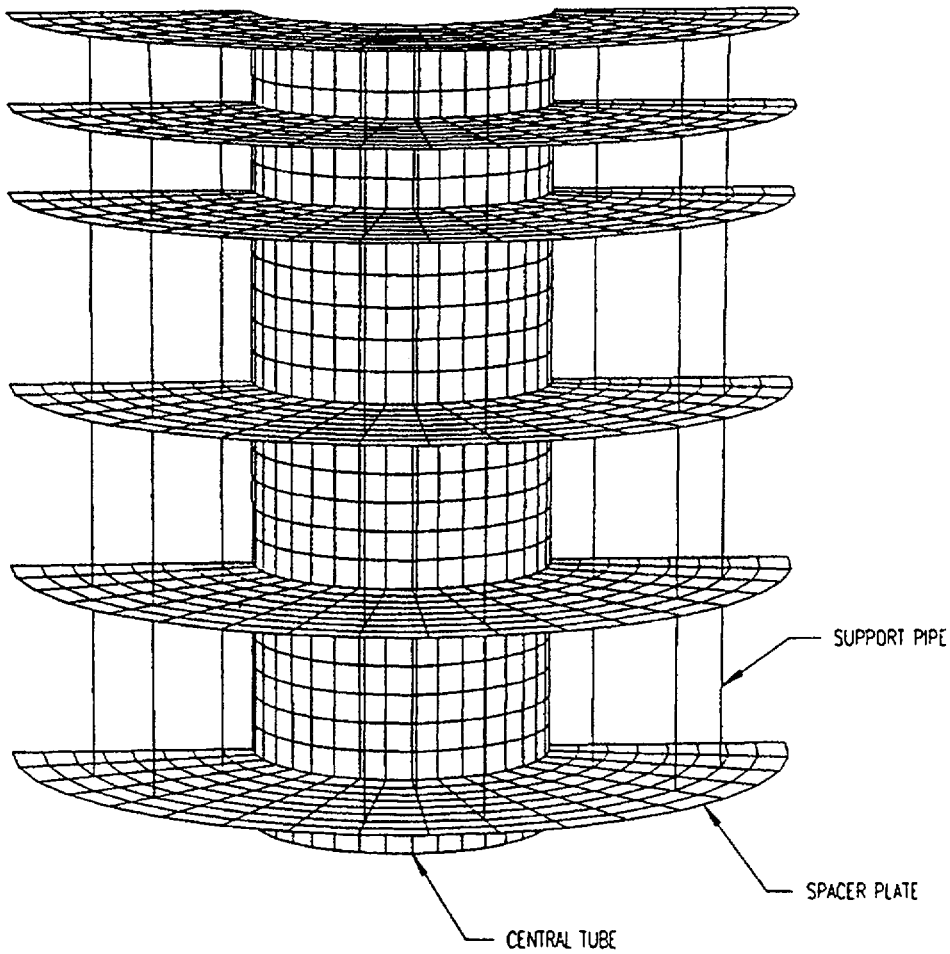


**Figure 2.45. Multifunctional Rack Finite Element Model, Inverted Configuration**

**2.11.4.3 Design Criteria**

**2.11.4.4 Multifunctional Rack Weight.** The total weight of the Multifuctional rack is 1100 lbs. The Multifunctional rack assembly component weights vary from 317 to 1100 lbs.

**2.11.4.5 Normal Conditions of Transport.** The Multifuctional rack assembly, when subjected to the normal conditions of transport as specified in 10CFR71.71, meets the performance requirements specified in Subpart E of 10CFR71 [2.1]. This is demonstrated in the following sections where each normal condition is addressed and shown to meet the applicable design criteria.

**2.11.4.5.1 Heat.** The thermal evaluation for the normal and off-normal events is performed in Chapter 3.0. The structural evaluation of the resulting thermal distributions is presented later in this Subsection.

**2.11.4.5.2 Summary Temperatures and Thermal Stresses.** The Multifunctional rack is not a pressure boundary. Therefore, pressure loads need not be addressed in the structural analysis. The controlling design temperatures for normal conditions of transport used in the structural analysis are listed in Table 2.181. The thermal stresses for both conditions discussed in Paragraph 2.11.4.1 are summarized in Table 2.182. For all subsequent analyses, theses thermal stresses are combined with the corresponding drop loading cases.

**Table 2.181. Maximum Normal Condition Temperatures**

| Package Component | Max. Temp (°F) | Design Temperature Criteria |
|---|---|---|
| Multifunctional rack: Source material | 537 | <800 |
| Cask Cavity | 341 | <600 |
| Lead Shield | 338 | <600 |
| Cask Seal Area | 315 | <400 |
| Overpack Accessible Outer Surface(1) | 197 | No Limit |
| Overpack Accessible Outer Surface(2) | 146 | 180 |

Notes: (1): 100°F ambient with insolation
(2): 100°F ambient in a shade

**Table 2.182. Thermal Stress Intensities, Normal Conditions**

| Thermal Stresses | | | | | | | | |
|---|---|---|---|---|---|---|---|---|
| Ambient Temperature | | | | | | | | |
| | (-20 Degrees F) | | | | (100 Degrees F) | | | |
| Element | Sig1 | Sig2 | Sig3 | Q | Sig1 | Sig2 | Sig3 | Q |
| **Rack Flange** | | | | | | | | |
| 21 | 0.338 | 0.013 | 0.239 | 0.325 | 0.250 | 0.006 | 0.178 | 0.245 |
| 125 | 0.336 | 0.015 | 0.240 | 0.321 | 0.249 | 0.007 | 0.179 | 0.242 |
| 354 | 0.256 | -0.766 | 0.511 | 1.277 | 0.188 | -0.557 | 0.373 | 0.930 |
| 394 | 0.163 | -0.673 | 0.557 | 1.229 | 0.122 | -0.491 | 0.407 | 0.898 |
| 508 | 1.471 | 0.051 | 0.710 | 1.420 | 1.070 | 0.036 | 0.517 | 1.034 |
| 1101 | 0.815 | 0.714 | 0.186 | 0.629 | 0.626 | 0.566 | 0.159 | 0.497 |
| 1125 | 0.874 | 0.582 | 0.348 | 0.526 | 0.676 | 0.485 | 0.271 | 0.405 |
| | | | | | | | | |
| **Cylinder** | | | | | | | | |
| 2007 | 4.866 | -1.456 | 3.161 | 6.322 | 3.539 | -1.064 | 2.302 | 4.603 |
| 2019 | 2.867 | 2.557 | 1.949 | 0.918 | 2.027 | 1.809 | 1.376 | 0.651 |
| 2431 | 0.508 | 0.229 | 0.333 | 0.279 | 0.507 | 0.313 | 0.338 | 0.194 |
| | | | | | | | | |
| **Supports** | | | | | | | | |
| 3106 | 0.089 | 9.148 | 0.088 | 9.059 | 0.059 | 6.624 | 0.059 | 6.565 |
| 3125 | 0.336 | 0.888 | 0.336 | 0.552 | 0.233 | 0.714 | 0.233 | 0.481 |
| 3225 | 0.336 | 0.612 | 0.814 | 0.478 | 0.233 | 0.473 | 0.649 | 0.416 |
| 3601 | 0.118 | 1.913 | 0.422 | 1.795 | 0.088 | 1.405 | 0.311 | 1.317 |
| 3801 | 0.118 | 0.753 | 1.824 | 1.706 | 0.088 | 0.554 | 1.340 | 1.251 |

**2.11.4.5.3 Cold.** For the cold condition, a -40°F steady state ambient temperature is specified in Reference [2.8]. This temperature in conjunction with no materials load in the cask will result in a minimum temperature throughout the cask of -40°F. Under this condition, the thermal stress in the Multifunctional rack is negligible, since the rack is made of a single material and there's no thermal gradient existing within the rack. The materials of construction for the Multifunctional rack assembly are not adversely affected by the -40°F condition.

**2.11.4.5.4 Reduced External Pressure.** The Multifunctional rack assembly is not a pressure boundary and the effects of external pressure on the cask body have no effect on the Multifunctional rack assembly.

**2.11.4.5.5 Increased External Pressure.** The basket assembly is not a pressure boundary and the effects of external pressure on the cask body have no effect on the Multifunctional rack assembly.

**2.11.4.5.6 Vibration.** The stresses induced by vibration normally incident to handling and transportation of the package are considered to be negligible. The Multifunctional rack loads resulting from the normal vibration accelerations will conservatively be less than 10 g's vertical and 5 g's lateral that are selected as loading condition. When compared to the stresses resulting from the normal condition one foot drop loads (Subsection 2.6.7), the stresses due to a 10 g/5 g combined vibration load will be enveloped by those due to the drop condition. The resulting stress intensity values resulting from the 10 g/5 g combined vibration analysis are presented in Tables 2.183 and 2.184 for the -20°F and the normal thermal conditions respectively. Vibration fatigue is addressed below.

**2.11.4.5.6a Vibration Fatigue.** The effect of each acceleration response (10 g's vertical and 5 g's lateral) is separately analyzed, and the resulting stresses are combined by the square root of the sum of the square (SRSS) procedure to obtain the net effect on the rack. The evaluation is performed for the vibration loads, and for the cumulative effects of vibration and thermal loads for the expected life of the rack.

The Multifunctional rack fatigue usage factor is calculated to be +0.00 after rounding off. The calculation assumed 100 sets of 12 round trips, with 10 hours duration each way between inspection periods. The calculation of the fatigue usage factor is presented in Paragraph 2.11.4.10. Chapter 8.0, Reference [2.2], gives inspection requirements and their schedules. It also uses the first mode of vibration equal to 287 Hz. The method used here is conservative given the unrealistic 287 cycles per second to calculate the number of stress cycles and the unrealistic applied transportation loads of 10 g's vertical and 5 g's lateral. Based on these results, fatigue is not a concern in this design.

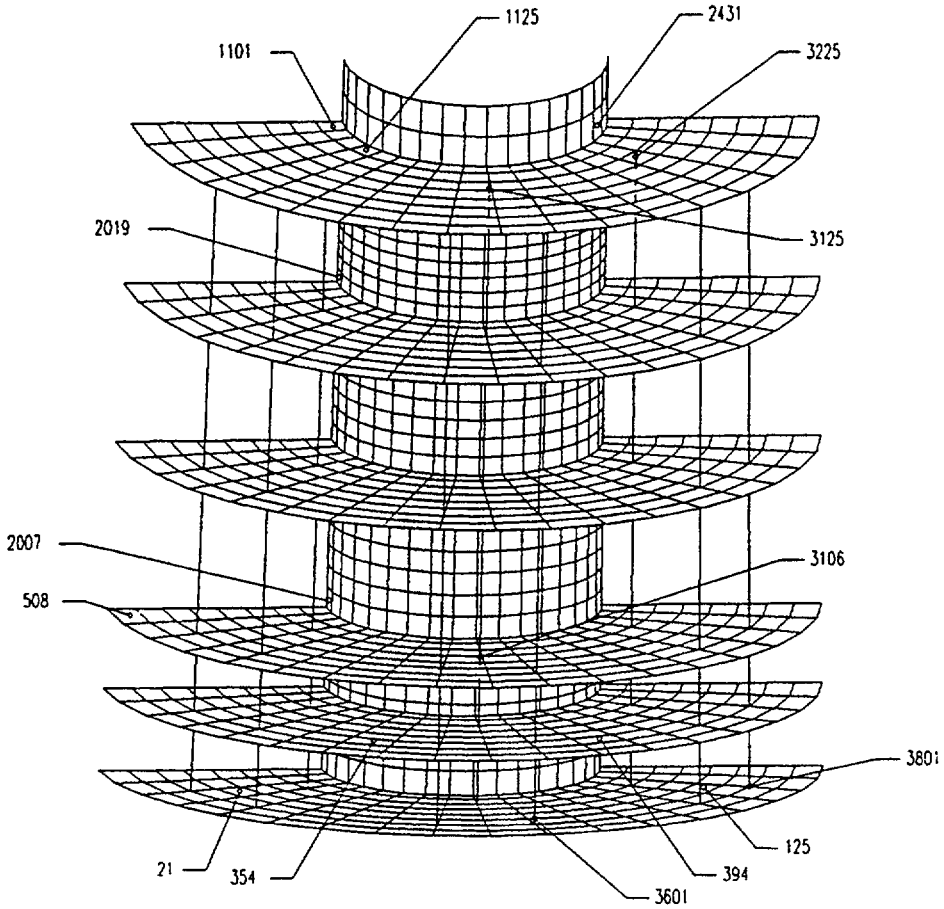


**Figure 2.46. Element of High Stresses**

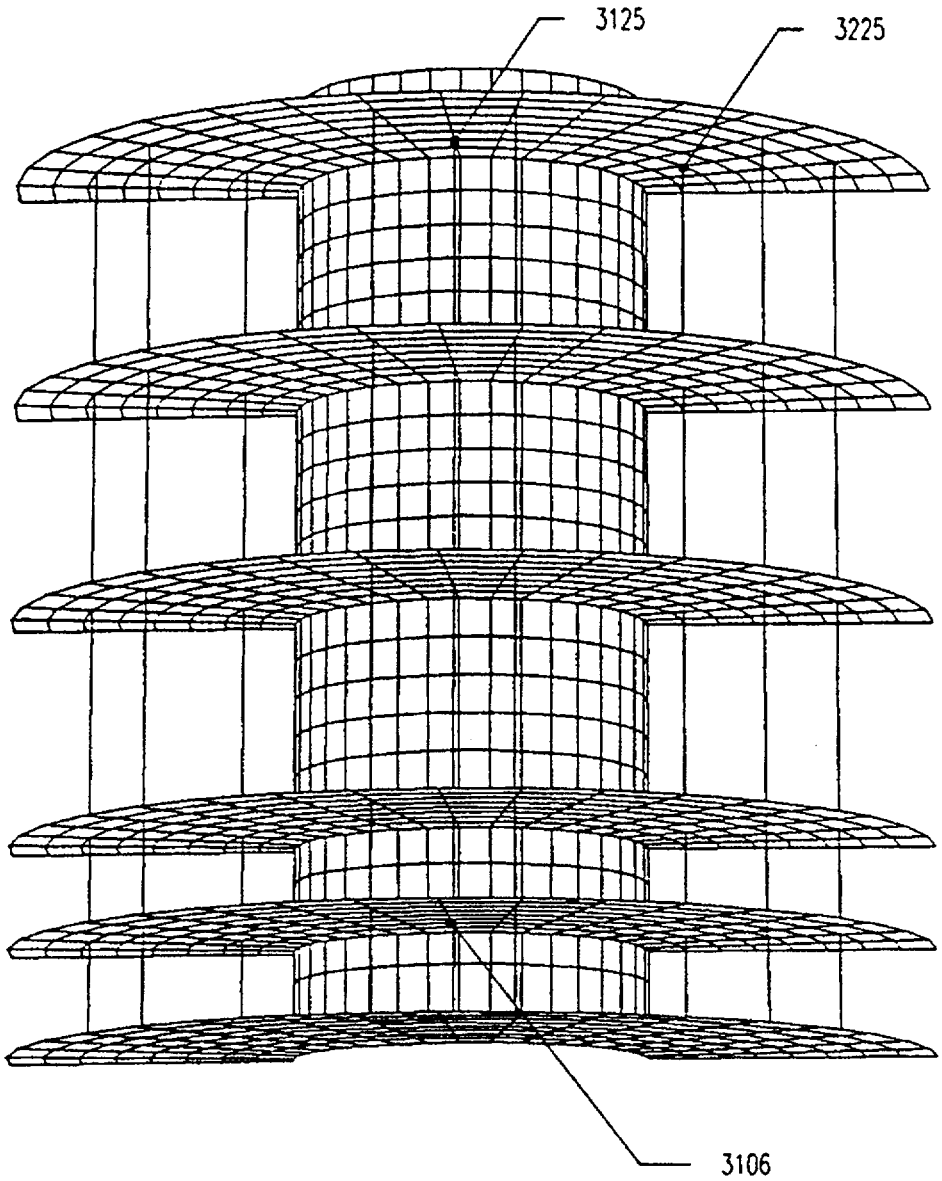


**Figure 2.47. Element of High Stresses, Beam Elements**

**Table 2.183. Vibration Analysis at -20 Degrees Fahrenheit**

**Normal Condition**
**(-20 Degrees Fahrenheit)**

| Stress Components | $P_m$ | $P_m + P_b$ | $P_m + P_b + Q$ | Shear(1) |
|---|---|---|---|---|
| Allowable Criteria | $S_m$ | $1.5S_m$ | $3S_m$ | $0.6S_m$ |
| Allowable Values (ksi) | 15.2 | 22.8 | 45.6 | 9.12 |

| Loading Condition | Max Stress Location | Component $P_m$ | Allowable $S_m$ | Component $P_m + P_b$ | Allowable $1.5S_m$ | Component $P_m + P_b + Q$ | Allowable $3S_m$ |
|---|---|---|---|---|---|---|---|
| Vibration | **Rack Flange** | | | | | | |
| | 21 | 0.05 | 15.2 | 1.18 | 22.8 | 1.50 | 45.6 |
| | 125 | 0.02 | 15.2 | 1.15 | 22.8 | 1.47 | 45.6 |
| | 354 | 0.05 | 15.2 | 0.09 | 22.8 | 1.36 | 45.6 |
| | 395 | 0.05 | 15.2 | 0.09 | 22.8 | 1.32 | 45.6 |
| | 508 | 0.57 | 15.2 | 1.01 | 22.8 | 2.43 | 45.6 |
| | 1101 | 0.08 | 15.2 | 0.34 | 22.8 | 0.97 | 45.6 |
| | 1125 | 0.09 | 15.2 | 0.41 | 22.8 | 0.94 | 45.6 |
| | | | | | | | |
| | **Cylinder** | | | | | | |
| | 2007 | 0.39 | 15.2 | 0.72 | 22.8 | 7.04 | 45.6 |
| | 2019 | 0.38 | 15.2 | 0.66 | 22.8 | 1.58 | 45.6 |
| | 2431 | 0.45 | 15.2 | 0.88 | 22.8 | 1.16 | 45.6 |
| | | | | | | | |
| | **Supports** | | | | | | |
| | 3106 | 0.53 | 15.2 | 0.91 | 22.8 | 9.97 | 45.6 |
| | 3125 | 0.20 | 15.2 | 0.35 | 22.8 | 0.91 | 45.6 |
| | 3225 | 0.21 | 15.2 | 0.38 | 22.8 | 0.86 | 45.6 |
| | 3601 | 0.65 | 15.2 | 1.59 | 22.8 | 3.39 | 45.6 |
| | 3801 | 0.65 | 15.2 | 1.59 | 22.8 | 3.29 | 45.6 |

**Table 2.184. Vibration Analysis at 100 Degrees Fahrenheit**

**Normal Condition**
**(100 Degrees Fahrenheit)**

| Stress Components | $P_m$ | $P_m + P_b$ | $P_m + P_b + Q$ | Shear(1) |
|---|---|---|---|---|
| Allowable Criteria | $S_m$ | $1.5S_m$ | $3S_m$ | $0.6S_m$ |
| Allowable Values (ksi) | 15.2 | 22.8 | 45.6 | 9.12 |

| Loading Condition | Max Stress Location | Component $P_m$ | Allowable $S_m$ | Component $P_m + P_b$ | Allowable $1.5S_m$ | Component $P_m + P_b + Q$ | Allowable $3S_m$ |
|---|---|---|---|---|---|---|---|
| Vibration | **Rack Flange** | | | | | | |
| | 21 | 0.05 | 15.2 | 1.18 | 22.8 | 1.42 | 45.6 |
| | 125 | 0.02 | 15.2 | 1.15 | 22.8 | 1.39 | 45.6 |
| | 354 | 0.05 | 15.2 | 0.09 | 22.8 | 1.02 | 45.6 |
| | 395 | 0.05 | 15.2 | 0.09 | 22.8 | 0.98 | 45.6 |
| | 508 | 0.57 | 15.2 | 1.01 | 22.8 | 2.04 | 45.6 |
| | 1101 | 0.08 | 15.2 | 0.34 | 22.8 | 0.84 | 45.6 |
| | 1125 | 0.09 | 15.2 | 0.41 | 22.8 | 0.82 | 45.6 |
| | | | | | | | |
| | **Cylinder** | | | | | | |
| | 2007 | 0.39 | 15.2 | 0.72 | 22.8 | 5.32 | 45.6 |
| | 2019 | 0.38 | 15.2 | 0.66 | 22.8 | 1.32 | 45.6 |
| | 2431 | 0.45 | 15.2 | 0.88 | 22.8 | 1.07 | 45.6 |
| | | | | | | | |
| | **Supports** | | | | | | |
| | 3106 | 0.53 | 15.2 | 0.91 | 22.8 | 7.48 | 45.6 |
| | 3125 | 0.20 | 15.2 | 0.35 | 22.8 | 0.83 | 45.6 |
| | 3225 | 0.21 | 15.2 | 0.38 | 22.8 | 0.80 | 45.6 |
| | 3601 | 0.65 | 15.2 | 1.59 | 22.8 | 2.91 | 45.6 |
| | 3801 | 0.65 | 15.2 | 1.59 | 22.8 | 2.84 | 45.6 |

**2.11.4.5.7 Free Drop.** The regulations, Reference [2.1], include a one-foot drop as part of the normal conditions of transport. The Model 2000 Package is transported vertically, an analysis of the Multifunctional rack for postulated one foot drop is performed for the head on, bottom on, and side orientations to satisfy the intent of the regulations.

The one foot vertical and side drop load definition is taken from Reference [2.3], page 2-70, which states "The g's force produced by the one foot drop for each drop configuration for a toroid with a wall thickness of 0.76 in are: Head On 69 g's; Side 20 g's; Cg-over-corner 14 g's...." However, the load used in the analysis for the side orientation was that of the head on (69 g's). Consistent with the currently approved design basis for the package, this load definition represents an enveloping design basis for the Multifunctional rack assembly.

**2.11.4.5.7a One Foot Head On Drop.** A finite element analysis is used for the Multifunctional rack one-foot head on drop evaluation. The loads and boundary conditions considered in the Multifunctional rack one foot head on drop analysis are illustrated in Figure 2.48. The upper rack is physically modeled, while the lower rack is included in the model as weight loading.

The force loading on the model are from the weight of the lower rack (210 lbs × 69 g) applied on top of the perimeter of the center cylinder and the weight of the lower rack materials (132 lbs × 69 g) applied at the second circular plate as shown in Figure 2.48. Body forces of 69 g are also applied throughout the model (210 lbs × 69 g). The weight of the materials of the upper rack is not included in the model, since these materials will impact on the cask surface during the head on drop condition.

Simply supported boundary conditions in vertical direction only are imposed on the perimeter of the center cylinder, since it will make a full contact with the cask surface during the head on drop condition. The stress intensity values resulting from this analysis are presented in Tables 2.185 and 2.186 for the -20°F and the normal thermal conditions (100°F), respectively.

**2.11.4.5.7b One Foot Bottom On Drop.** The loads and boundary conditions considered in the Multifunctional rack one foot bottom drop analysis are illustrated in Figures 2.49 and 2.50, respectively. The lower rack is physically modeled, while the upper rack is included in the model as weight loading.

The force loading on the model are from the weight of the upper rack including the materials (342 lbs × 69 g) applied on the perimeter of the center cylinder as shown in Figure 2.49. The weight of the materials of the lower rack is also applied on the appropriate locations on the circulate plate. Body forces of 69 g are also applied throughout the model (210 lbs × 69 g).

Simply supported boundary conditions in vertical direction only are imposed on the perimeter of the bottom center cylinder and the mid circumference of the bottom plate to simulate the circular tubes welded at the base plate of the lower rack. The boundary conditions are shown in Figure 2.5, which shows the model of the lower rack viewed up from -y axis. The stress intensity values resulting from this analysis are presented in Tables 2.187 and 2.188 for the -20°F and the normal thermal conditions (100°F), respectively.

**2.11.4.5.7c One Foot Side Drop.** The loads and boundary conditions considered in the Multifunctional rack one foot side drop analysis are illustrated in Figure 2.51. Because of the similarity of the racks, only one rack is physically modeled.

The force loading on the model are from the weight of the materials (132 lbs × 69 g) applied on their appropriate location throughout the top three circular plates as shown in Figure 2.49. Although the materials rest on the fourth plate, they do not impose any weight loading on that plate during the side drop condition. Body forces of 69 g are also applied throughout the model (210 1bs × 69 g).

Simply supported boundary conditions in lateral direction only are imposed on one end of three circular plates of the rack as shown in Figure 2.51. The ends of these three circular plates are selected as boundary points rather than all circular plates conservatively. The stress intensity values resulting from this analysis are presented in Tables 2.189 and 2.190 for the -20°F and the normal thermal conditions (100°F), respectively.

**2.11.4.5.7d Summary of Results.** The normal drop condition maximum stresses are summarized in Table 2.191. As can be seen, all stresses are well within allowable limits. Therefore, the integrity of the Multifunctional rack assembly is maintained and remains fully functional for all normal drop conditions.

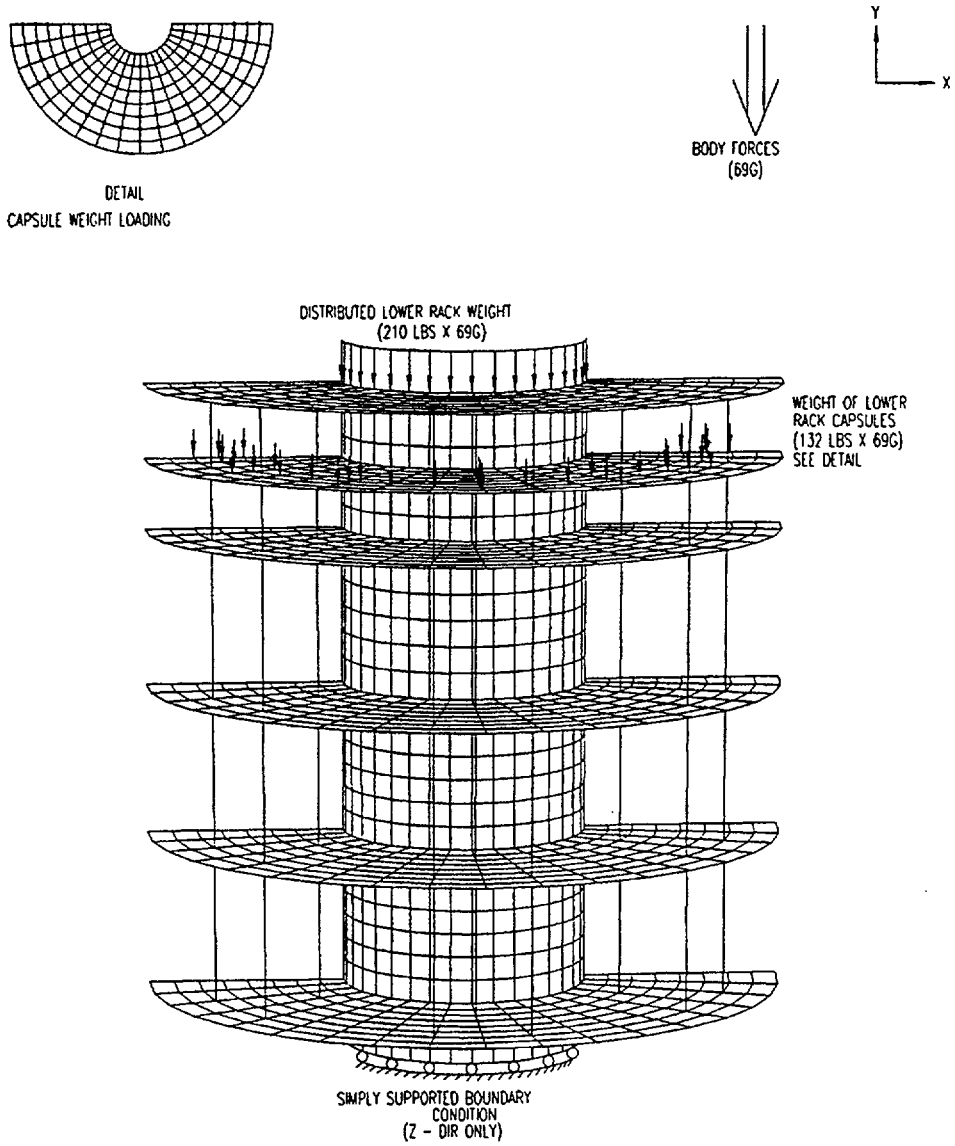


**Figure 2.48. Normal Condition Head On Drop**

**Table 2.185. Normal Condition Head On Drop at -20 Degrees Fahrenheit**

**Normal Condition**
**(-20 Degrees Fahrenheit)**

| Stress Components | $P_m$ | $P_m + P_b$ | $P_m + P_b + Q$ | Shear(1) |
|---|---|---|---|---|
| Allowable Criteria | $S_m$ | $1.5S_m$ | $3S_m$ | $0.6S_m$ |
| Allowable Values (ksi) | 15.2 | 22.8 | 45.6 | 9.12 |

| Loading Condition | Max Stress Location | Component $P_m$ | Allowable $S_m$ | Component $P_m + P_b$ | Allowable $1.5S_m$ | Component $P_m + P_b + Q$ | Allowable $3S_m$ |
|---|---|---|---|---|---|---|---|
| 1 Foot Drop on Top | **Rack Flange** | | | | | | |
| | 21 | 0.08 | 15.2 | 0.44 | 22.8 | 0.77 | 45.6 |
| | 125 | 0.08 | 15.2 | 0.45 | 22.8 | 0.77 | 45.6 |
| | 354 | 0.09 | 15.2 | 4.08 | 22.8 | 5.36 | 45.6 |
| | 395 | 0.06 | 15.2 | 4.05 | 22.8 | 5.28 | 45.6 |
| | 508 | 0.03 | 15.2 | 0.52 | 22.8 | 1.94 | 45.6 |
| | 1101 | 0.16 | 15.2 | 2.10 | 22.8 | 2.73 | 45.6 |
| | 1125 | 0.19 | 15.2 | 1.48 | 22.8 | 2.01 | 45.6 |
| | | | | | | | |
| | **Cylinder** | | | | | | |
| | 2007 | 1.96 | 15.2 | 3.76 | 22.8 | 10.08 | 45.6 |
| | 2019 | 1.92 | 15.2 | 3.69 | 22.8 | 4.60 | 45.6 |
| | 2431 | 3.58 | 15.2 | 7.28 | 22.8 | 7.56 | 45.6 |
| | | | | | | | |
| | **Supports** | | | | | | |
| | 3106 | 0.08 | 15.2 | 0.65 | 22.8 | 9.70 | 45.6 |
| | 3125 | 0.92 | 15.2 | 4.28 | 22.8 | 4.83 | 45.6 |
| | 3225 | 0.93 | 15.2 | 3.87 | 22.8 | 4.35 | 45.6 |
| | 3601 | 0.36 | 15.2 | 1.28 | 22.8 | 3.07 | 45.6 |
| | 3801 | 0.36 | 15.2 | 1.44 | 22.8 | 3.14 | 45.6 |

**Table 2.186. Normal Condition Head On Drop at 100 Degrees Fahrenheit**

**Normal Condition (100 Degrees Fahrenheit)**

| Stress Components | $P_m$ | $P_m + P_b$ | $P_m + P_b + Q$ | Shear(1) |
|---|---|---|---|---|
| Allowable Criteria | $S_m$ | $1.5S_m$ | $3S_m$ | $0.6S_m$ |
| Allowable Values (ksi) | 15.2 | 22.8 | 45.6 | 9.12 |

| Loading Condition | Max Stress Location | Component $P_m$ | Allowable $S_m$ | Component $P_m + P_b$ | Allowable $1.5S_m$ | Component $P_m + P_b + Q$ | Allowable $3S_m$ |
|---|---|---|---|---|---|---|---|
| 1 Foot Drop on Top | **Rack Flange** | | | | | | |
| | 21 | 0.08 | 15.2 | 0.44 | 22.8 | 0.69 | 45.6 |
| | 125 | 0.08 | 15.2 | 0.45 | 22.8 | 0.69 | 45.6 |
| | 354 | 0.09 | 15.2 | 4.08 | 22.8 | 5.01 | 45.6 |
| | 395 | 0.06 | 15.2 | 4.05 | 22.8 | 4.95 | 45.6 |
| | 508 | 0.03 | 15.2 | 0.52 | 22.8 | 1.55 | 45.6 |
| | 1101 | 0.16 | 15.2 | 2.10 | 22.8 | 2.60 | 45.6 |
| | 1125 | 0.19 | 15.2 | 1.48 | 22.8 | 1.88 | 45.6 |
| | | | | | | | |
| | **Cylinder** | | | | | | |
| | 2007 | 1.96 | 15.2 | 3.76 | 22.8 | 8.36 | 45.6 |
| | 2019 | 1.92 | 15.2 | 3.69 | 22.8 | 4.34 | 45.6 |
| | 2431 | 3.58 | 15.2 | 7.28 | 22.8 | 7.47 | 45.6 |
| | | | | | | | |
| | **Supports** | | | | | | |
| | 3106 | 0.08 | 15.2 | 0.65 | 22.8 | 7.21 | 45.6 |
| | 3125 | 0.92 | 15.2 | 4.28 | 22.8 | 4.76 | 45.6 |
| | 3225 | 0.93 | 15.2 | 3.87 | 22.8 | 4.29 | 45.6 |
| | 3601 | 0.36 | 15.2 | 1.28 | 22.8 | 2.59 | 45.6 |
| | 3801 | 0.36 | 15.2 | 1.44 | 22.8 | 2.69 | 45.6 |

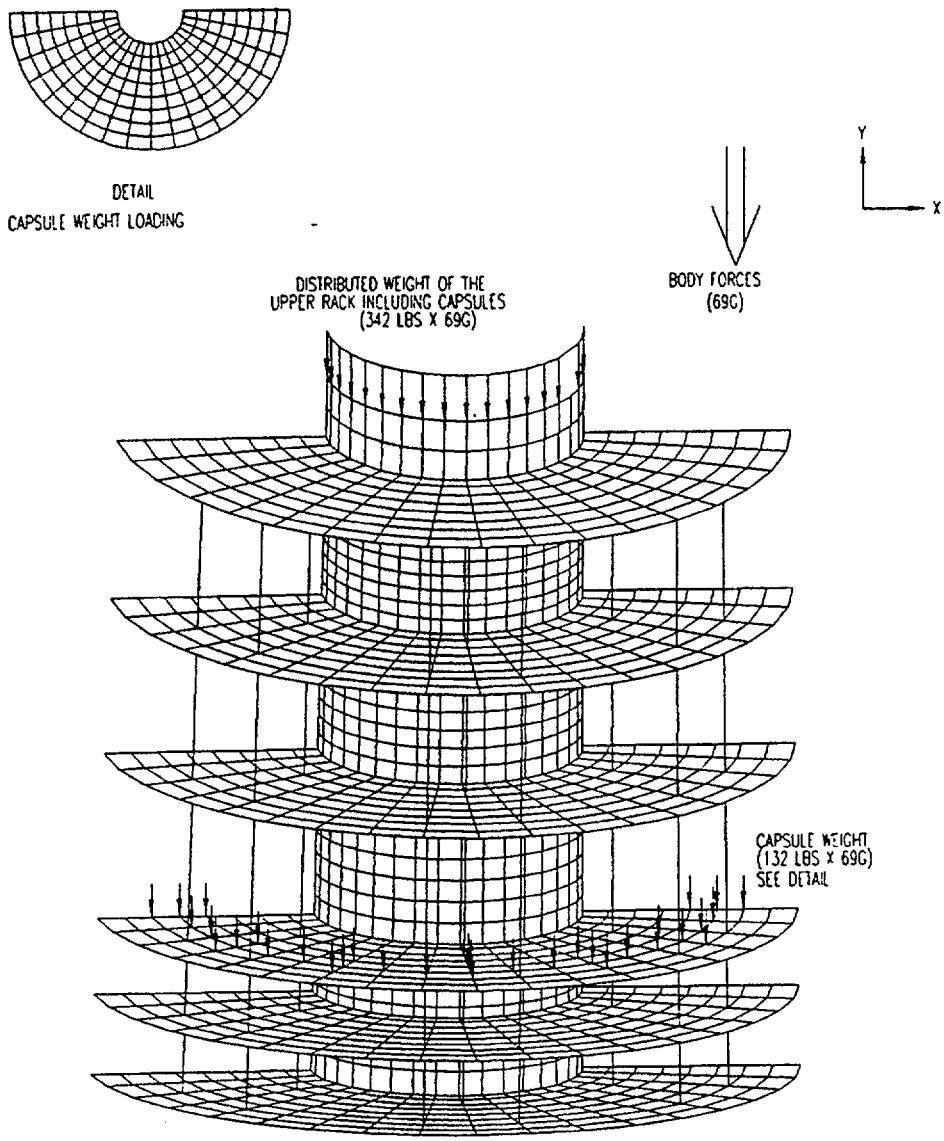


**Figure 2.49. Normal Condition Bottom Drop, Loadings**

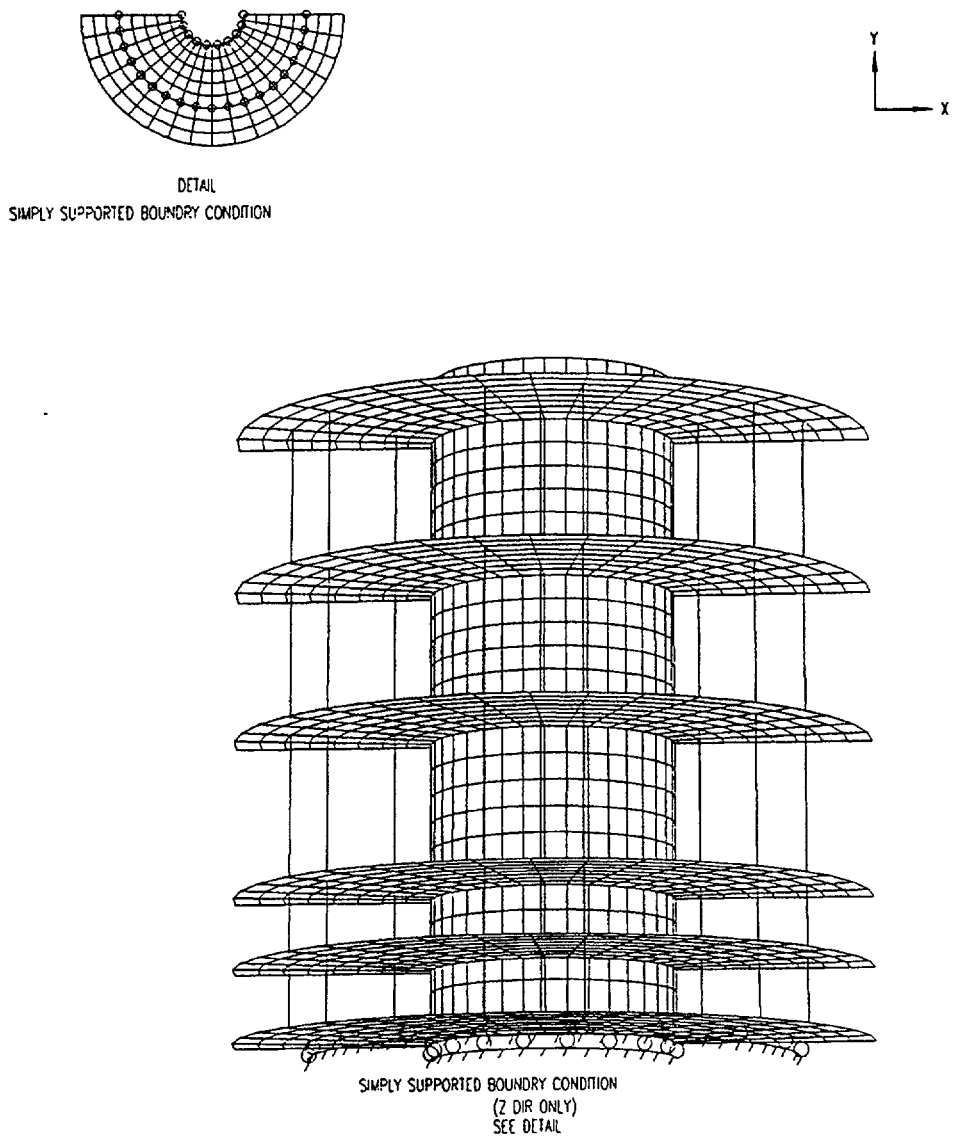


**Figure 2.50. Normal Condition Bottom Drop, Boundary Conditions**

**Table 2.187. Normal Condition Bottom Drop at -20 Degrees Fahrenheit**

**Normal Condition**
**(-20 Degrees Fahrenheit)**

| Stress Components | $P_m$ | $P_m + P_b$ | $P_m + P_b + Q$ | Shear(1) |
|---|---|---|---|---|
| Allowable Criteria | $S_m$ | $1.5S_m$ | $3S_m$ | $0.6S_m$ |
| Allowable Values (ksi) | 15.2 | 22.8 | 45.6 | 9.12 |

| Loading Condition | Max Stress Location | Component $P_m$ | Allowable $S_m$ | Component $P_m + P_b$ | Allowable $1.5S_m$ | Component $P_m + P_b + Q$ | Allowable $3S_m$ |
|---|---|---|---|---|---|---|---|
| 1 Foot Drop on Bottom | **Rack Flange** | | | | | | |
| | 21 | 0.17 | 15.2 | 7.93 | 22.8 | 8.26 | 45.6 |
| | 125 | 0.16 | 15.2 | 7.92 | 22.8 | 8.24 | 45.6 |
| | 354 | 0.34 | 15.2 | 0.59 | 22.8 | 1.87 | 45.6 |
| | 395 | 0.31 | 15.2 | 0.58 | 22.8 | 1.81 | 45.6 |
| | 508 | 0.09 | 15.2 | 1.56 | 22.8 | 2.98 | 45.6 |
| | 1101 | 0.14 | 15.2 | 1.00 | 22.8 | 1.63 | 45.6 |
| | 1125 | 0.22 | 15.2 | 0.89 | 22.8 | 1.42 | 45.6 |
| | | | | | | | |
| | **Cylinder** | | | | | | |
| | 2007 | 2.72 | 15.2 | 4.67 | 22.8 | 10.99 | 45.6 |
| | 2019 | 2.25 | 15.2 | 4.18 | 22.8 | 5.10 | 45.6 |
| | 2431 | 3.06 | 15.2 | 6.01 | 22.8 | 6.29 | 45.6 |
| | | | | | | | |
| | **Supports** | | | | | | |
| | 3106 | 3.64 | 15.2 | 6.26 | 22.8 | 15.31 | 45.6 |
| | 3125 | 1.40 | 15.2 | 2.29 | 22.8 | 2.84 | 45.6 |
| | 3225 | 1.46 | 15.2 | 2.27 | 22.8 | 2.75 | 45.6 |
| | 3601 | 4.47 | 15.2 | 10.99 | 22.8 | 12.79 | 45.6 |
| | 3801 | 4.49 | 15.2 | 10.95 | 22.8 | 12.66 | 45.6 |

**Table 2.188. Normal Condition Bottom Drop at 100 Degrees Fahrenheit**

**Normal Condition**
**(100 Degrees Fahrenheit)**

| Stress Components | $P_m$ | $P_m + P_b$ | $P_m + P_b + Q$ | Shear(1) |
|---|---|---|---|---|
| Allowable Criteria | $S_m$ | $1.5S_m$ | $3S_m$ | $0.6S_m$ |
| Allowable Values (ksi) | 15.2 | 22.8 | 45.6 | 9.12 |

| Loading Condition | Max Stress Location | Component $P_m$ | Allowable $S_m$ | Component $P_m + P_b$ | Allowable $1.5S_m$ | Component $P_m + P_b + Q$ | Allowable $3S_m$ |
|---|---|---|---|---|---|---|---|
| 1 Foot Drop on Bottom | **Rack Flange** | | | | | | |
| | 21 | 0.17 | 15.2 | 7.93 | 22.8 | 8.17 | 45.6 |
| | 125 | 0.16 | 15.2 | 7.92 | 22.8 | 8.16 | 45.6 |
| | 354 | 0.34 | 15.2 | 0.59 | 22.8 | 1.52 | 45.6 |
| | 395 | 0.31 | 15.2 | 0.58 | 22.8 | 1.48 | 45.6 |
| | 508 | 0.09 | 15.2 | 1.56 | 22.8 | 2.60 | 45.6 |
| | 1101 | 0.14 | 15.2 | 1.00 | 22.8 | 1.50 | 45.6 |
| | 1125 | 0.22 | 15.2 | 0.89 | 22.8 | 1.30 | 45.6 |
| | | | | | | | |
| | **Cylinder** | | | | | | |
| | 2007 | 2.72 | 15.2 | 4.67 | 22.8 | 9.27 | 45.6 |
| | 2019 | 2.25 | 15.2 | 4.18 | 22.8 | 4.83 | 45.6 |
| | 2431 | 3.06 | 15.2 | 6.01 | 22.8 | 6.21 | 45.6 |
| | | | | | | | |
| | **Supports** | | | | | | |
| | 3106 | 3.64 | 15.2 | 6.26 | 22.8 | 12.82 | 45.6 |
| | 3125 | 1.40 | 15.2 | 2.29 | 22.8 | 2.77 | 45.6 |
| | 3225 | 1.46 | 15.2 | 2.27 | 22.8 | 2.69 | 45.6 |
| | 3601 | 4.47 | 15.2 | 10.99 | 22.8 | 12.31 | 45.6 |
| | 3801 | 4.49 | 15.2 | 10.95 | 22.8 | 12.20 | 45.6 |

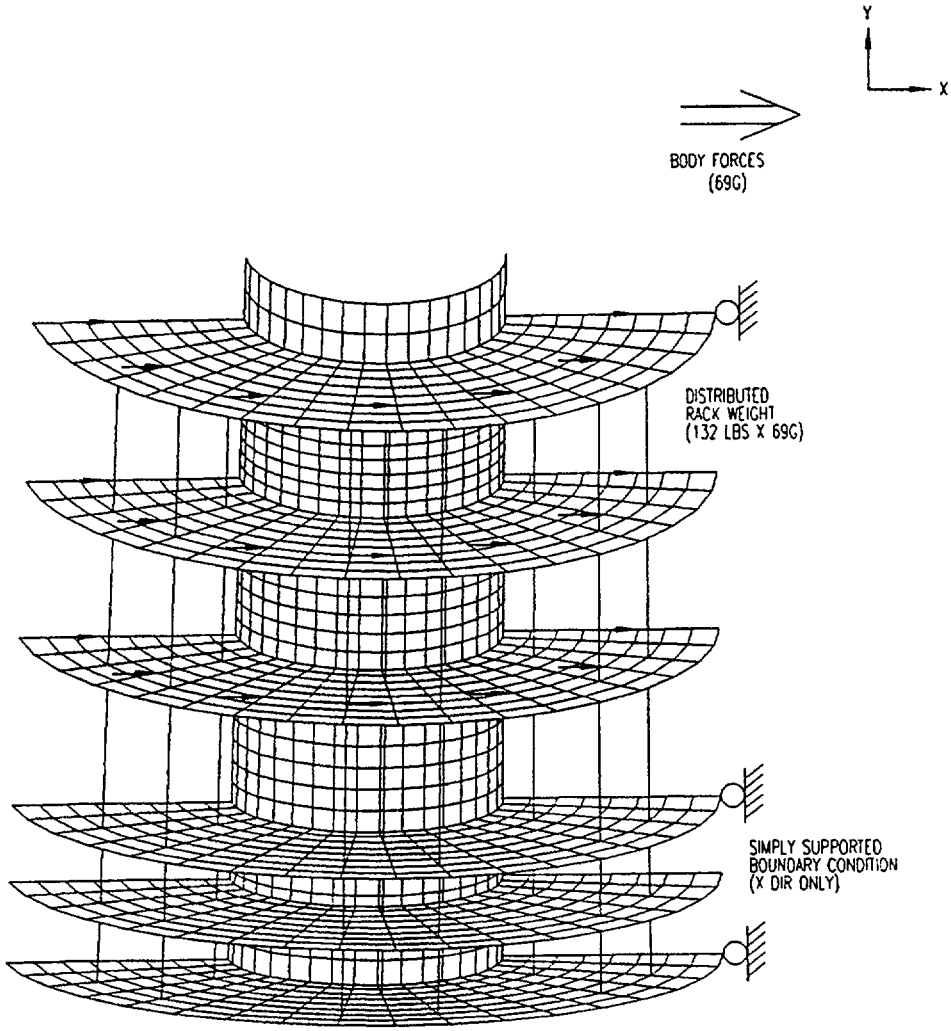


**Figure 2.51. Normal Condition Side Drop**

**Table 2.189. Normal Condition Side Drop at -20 Degrees Fahrenheit**

**Normal Condition**
**(-20 Degrees Fahrenheit)**

| Stress Components | $P_m$ | $P_m + P_b$ | $P_m + P_b + Q$ | Shear(1) |
|---|---|---|---|---|
| Allowable Criteria | $S_m$ | $1.5S_m$ | $3S_m$ | $0.6S_m$ |
| Allowable Values (ksi) | 15.2 | 22.8 | 45.6 | 9.12 |

| Loading Condition | Max Stress Location | Component $P_m$ | Allowable $S_m$ | Component $P_m + P_b$ | Allowable $1.5S_m$ | Component $P_m + P_b + Q$ | Allowable $3S_m$ |
|---|---|---|---|---|---|---|---|
| 1 Foot Drop on Side | **Rack Flange** | | | | | | |
| | 21 | 0.57 | 15.2 | 1.89 | 22.8 | 2.22 | 45.6 |
| | 125 | 0.04 | 15.2 | 0.21 | 22.8 | 0.54 | 45.6 |
| | 354 | 0.02 | 15.2 | 0.17 | 22.8 | 1.44 | 45.6 |
| | 395 | 0.02 | 15.2 | 0.21 | 22.8 | 1.44 | 45.6 |
| | 508 | 7.91 | 15.2 | 13.13 | 22.8 | 14.55 | 45.6 |
| | 1101 | 1.13 | 15.2 | 4.26 | 22.8 | 4.89 | 45.6 |
| | 1125 | 1.19 | 15.2 | 5.40 | 22.8 | 5.93 | 45.6 |
| | | | | | | | |
| | **Cylinder** | | | | | | |
| | 2007 | 0.18 | 15.2 | 2.40 | 22.8 | 8.72 | 45.6 |
| | 2019 | 2.66 | 15.2 | 3.43 | 22.8 | 4.34 | 45.6 |
| | 2431 | 0.74 | 15.2 | 1.32 | 22.8 | 1.60 | 45.6 |
| | | | | | | | |
| | **Supports** | | | | | | |
| | 3106 | 0.04 | 15.2 | 1.07 | 22.8 | 10.13 | 45.6 |
| | 3125 | 0.10 | 15.2 | 1.16 | 22.8 | 1.72 | 45.6 |
| | 3225 | 0.41 | 15.2 | 2.08 | 22.8 | 2.56 | 45.6 |
| | 3601 | 0.05 | 15.2 | 0.49 | 22.8 | 2.29 | 45.6 |
| | 3801 | 0.05 | 15.2 | 0.44 | 22.8 | 2.15 | 45.6 |

**Table 2.190. Normal Condition Side Drop at 100 Degrees Fahrenheit**

**Normal Condition**
**(100 Degrees Fahrenheit)**

| Stress Components | $P_m$ | $P_m + P_b$ | $P_m + P_b + Q$ | Shear(1) |
|---|---|---|---|---|
| Allowable Criteria | $S_m$ | $1.5S_m$ | $3S_m$ | $0.6S_m$ |
| Allowable Values (ksi) | 15.2 | 22.8 | 45.6 | 9.12 |

| Loading Condition | Max Stress Location | Component $P_m$ | Allowable $S_m$ | Component $P_m + P_b$ | Allowable $1.5S_m$ | Component $P_m + P_b + Q$ | Allowable $3S_m$ |
|---|---|---|---|---|---|---|---|
| 1 Foot Drop on Side | **Rack Flange** | | | | | | |
| | 21 | 0.57 | 15.2 | 1.89 | 22.8 | 2.14 | 45.6 |
| | 125 | 0.04 | 15.2 | 0.21 | 22.8 | 0.46 | 45.6 |
| | 354 | 0.02 | 15.2 | 0.17 | 22.8 | 1.10 | 45.6 |
| | 395 | 0.02 | 15.2 | 0.21 | 22.8 | 1.11 | 45.6 |
| | 508 | 7.91 | 15.2 | 13.13 | 22.8 | 14.16 | 45.6 |
| | 1101 | 1.13 | 15.2 | 4.26 | 22.8 | 4.75 | 45.6 |
| | 1125 | 1.19 | 15.2 | 5.40 | 22.8 | 5.81 | 45.6 |
| | | 0.00 | | | | | |
| | **Cylinder** | 0.00 | | | | | |
| | 2007 | 0.18 | 15.2 | 2.40 | 22.8 | 7.00 | 45.6 |
| | 2019 | 2.66 | 15.2 | 3.43 | 22.8 | 4.08 | 45.6 |
| | 2431 | 0.74 | 15.2 | 1.32 | 22.8 | 1.51 | 45.6 |
| | | | | | | | |
| | **Supports** | | | | | | |
| | 3106 | 0.04 | 15.2 | 1.07 | 22.8 | 7.64 | 45.6 |
| | 3125 | 0.10 | 15.2 | 1.16 | 22.8 | 1.65 | 45.6 |
| | 3225 | 0.41 | 15.2 | 2.08 | 22.8 | 2.50 | 45.6 |
| | 3601 | 0.05 | 15.2 | 0.49 | 22.8 | 1.81 | 45.6 |
| | 3801 | 0.05 | 15.2 | 0.44 | 22.8 | 1.69 | 45.6 |

**Table 2.191. Summary for Normal Conditions**

| Loading Conditions | High Stress Element | Element Location | Stress Type | Stress (ksi) | Allowable (ksi) | Margin of Safety |
|---|---|---|---|---|---|---|
| **Normal Conditions** | | | | | | |
| 1 Foot Head On Drop (-20 Degrees) | 2431 | Cylinder | $P_m + P_b$ | 7.28 | 22.80 | 2.13 |
| 1 Foot Head On Drop (100 Degrees) | 2431 | Cylinder | $P_m + P_b$ | 7.28 | 22.80 | 2.13 |
| 1 Foot Bottom Drop (-20 Degrees) | 3601 | Supports | $P_m + P_b$ | 10.99 | 22.80 | 1.07 |
| 1 Foot Bottom Drop (100 Degrees) | 3602 | Supports | $P_m + P_b$ | 10.99 | 22.80 | 1.07 |
| 1 Foot Side Drop (-20 Degrees) | 508 | Rack Flange | $P_m + P_b$ | 13.13 | 22.80 | 0.74 |
| 1 Foot Side Drop (100 Degrees) | 509 | Rack Flange | $P_m + P_b$ | 13.13 | 22.80 | 0.74 |
| Vibration Analysis (-20 Degrees) | 3106 | Supports | $P_m + P_b + Q$ | 9.97 | 45.60 | 3.57 |
| Vibration Analysis (100 Degrees) | 3106 | Supports | $P_m + P_b + Q$ | 7.48 | 45.60 | 5.10 |

**2.11.4.6 Compression.** The Multifunctional rack assembly need not be evaluated for compression. This test does not apply to the Model 2000 Transport Package, since the package weight is in excess of 5,000 kg (11,000 lbs).

**2.11.4.7 Penetration.** This test does not apply to the Multifunctional rack assembly. The puncture surface is the Model 2000 Package Overpack.

**2.11.4.8 Hypothetical Accident Conditions.** The Model 2000 Package Multifunctional rack assembly, when subjected to hypothetical accident conditions as specified in 10CFR71.73, Reference [2.1], meet the performance requirements specified in Subpart E of such Reference. This is demonstrated in the following paragraphs where each accident condition is addressed and shown to meet the applicable design criteria.

**2.11.4.8.1 Free Drop.** Subpart F of Reference [2.1] requires that a 30 foot free drop be considered for the package, which includes the basket assembly. Consistent with the approved Model 2000 Safety Analysis Report, Reference [2.3], four different load orientations are considered for the Multifunctional rack. These include the head on, bottom on, side, and cg-over-corner. The basket and liner loads vary in the different orientations due to differences in the toroid energy absorption characteristics and in the interaction of the fuel elements with the basket and liner. Oblique orientation drop is bounded by the evaluation of the horizontal and vertical drops as discussed in Reference [2.3], and is not addressed.

**2.11.4.8.2 Head On Drop.** The same finite element model and constraining conditions used for the normal condition head on drop case is utilized in this analysis with the exception of the force loading. Refer to Figure 2.52 for a free body diagram of this loading. Because of similarity of the racks, only the upper rack is modeled, while effect of the lower rack is included as a form of weight loading.

The 133 g's of body forces are applied to the Multifunctional rack model for this orientation. In addition, the weight of the lower rack, 210 lb. × 133 g, is evenly distributed along the upper edge of the central cylinder of the rack, and the weight of the lower rack capsules, 132 lb. × 133 g, is applied to the respective part of the Multifunctional rack. The same constraining conditions as the normal condition head on drop case are applied. Table 2.192 presents the resulting stress.

**2.11.4.8.3 Bottom Drop.** The same finite element model and constraining conditions used for the normal condition bottom drop case is utilized in this analysis with the exception of the force loading. Figure 2.53 and Figure 2.54 shows the loading and constraint conditions applied to the model for this case, respectively. Again, only the lower rack is model specifically, while the upper rack is included in the model as a form of weight loading.

The 133 g's of body forces are applied to the Multifunctional rack model for this orientation. The capsule weight, 132 lb. × 133 g, is applied to the respective part of the rack. In addition, the weight of the upper rack and capsules, 342 lbs × 133 g, is evenly distributed along the upper edge of the central cylinder of the rack. The same constraining conditions as the normal condition bottom drop case are applied throughout the model. Table 2.193 presents the resulting stress intensities.

**2.11.4.8.4 Side Drop.** Similar to the previous paragraphs, the same finite element model used for the normal condition side drop case is utilized in this analysis with the exception of the force loading. The g-force applied is 133 8's. Force distributions and constraint conditions employed in the model are depicted in Figure 2.55 and the resulting stresses are given in Table 2.194.

**2.11.4.8.5 Cg-Over-Corner Drop.** Since the orientation of this drop is such that the Cg (center of gravity) of the Multifunctional rack falls over the corner of the model, the 63 g's of inertia loading may be decomposed into 23.6 g's in the lateral direction and 58.4 g's in the vertical direction. The results of the accident bottom drop condition and those of the accident side drop conditions are linearly interpolated separately. These stresses are then combined by the square root of the sum of the square (SRSS) procedure, as discussed in Reference [2.3]. to obtain the net effect on the basket for the Cg over corner drop condition.

Force distributions and constraint conditions employed in the model are depicted in Figure 2.56 and Figure 2.57, and the resulting stresses are given in Table 2.195.

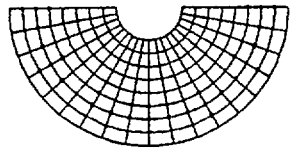

DETAIL
CAPSULE WEIGHT LOADING

BODY FORCES
(133G)

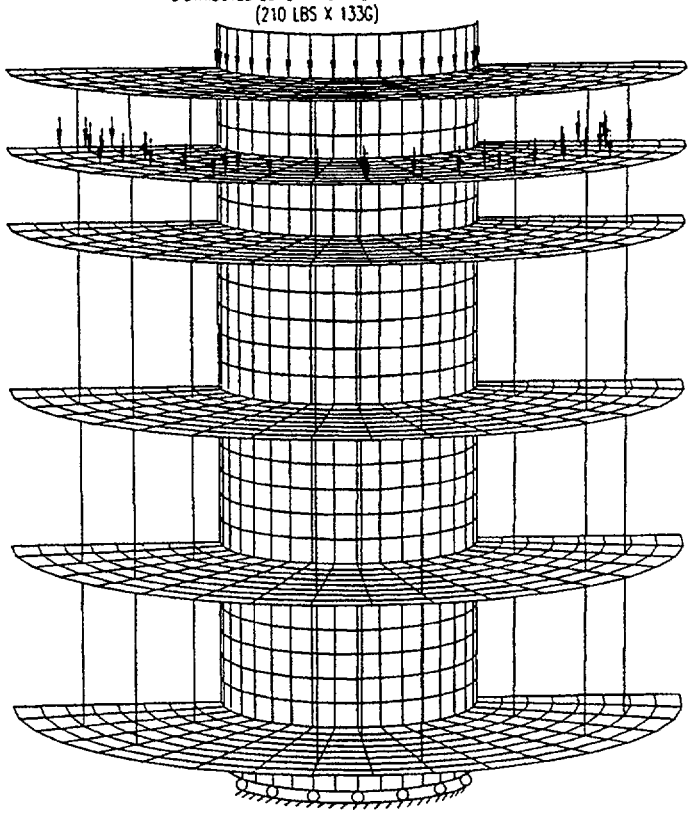


**Figure 2.52. Accident Condition Head On Drop**

**Table 2.192. Accident Condition Head On Drop**

| Accident Condition | | | | | |
|---|---|---|---|---|---|
| | Stress Components | $P_m$ | $P_m + P_b$ | Shear(3) | |
| | Allowable Criteria | $2.4S_m$(1) | $3.6S_m$(2) | $0.42S_u$ | |
| | Allowable Values (ksi) | 36.48 | 54.72 | | |
| **Loading Condition** | **Max Stress Location** | **Component $P_m$** | **Allowable $2.4S_m$** | **Component $P_m + P_b$** | **Allowable $3.6S_m$** |
| **30 Foot Drop On Top** | **Rack Flange** | | | | |
| | 21 | 0.15 | 36.48 | 0.85 | 54.72 |
| | 125 | 0.16 | 36.48 | 0.87 | 54.72 |
| | 354 | 0.17 | 36.48 | 7.86 | 54.72 |
| | 394 | 0.11 | 36.48 | 7.81 | 54.72 |
| | 508 | 0.06 | 36.48 | 1.00 | 54.72 |
| | 1101 | 0.32 | 36.48 | 4.05 | 54.72 |
| | 1125 | 0.37 | 36.48 | 2.85 | 54.72 |
| | | | | | |
| | **Cylinder** | | | | |
| | 2007 | 3.78 | 36.48 | 7.25 | 54.72 |
| | 2019 | 3.70 | 36.48 | 7.10 | 54.72 |
| | 2431 | 6.90 | 36.48 | 14.03 | 54.72 |
| | | | | | |
| | **Supports** | | | | |
| | 3106 | 0.16 | 36.48 | 1.24 | 54.72 |
| | 3125 | 1.77 | 36.48 | 8.25 | 54.72 |
| | 3225 | 1.80 | 36.48 | 7.46 | 54.72 |
| | 3601 | 0.69 | 36.48 | 2.46 | 54.72 |
| | 3801 | 0.70 | 36.48 | 2.77 | 54.72 |

Note 1: $2.4S_m$ was the lesser value when compared to $0.7S_u$.

Note 1: $3.6S_m$ was the lesser value when compared to $S_u$.

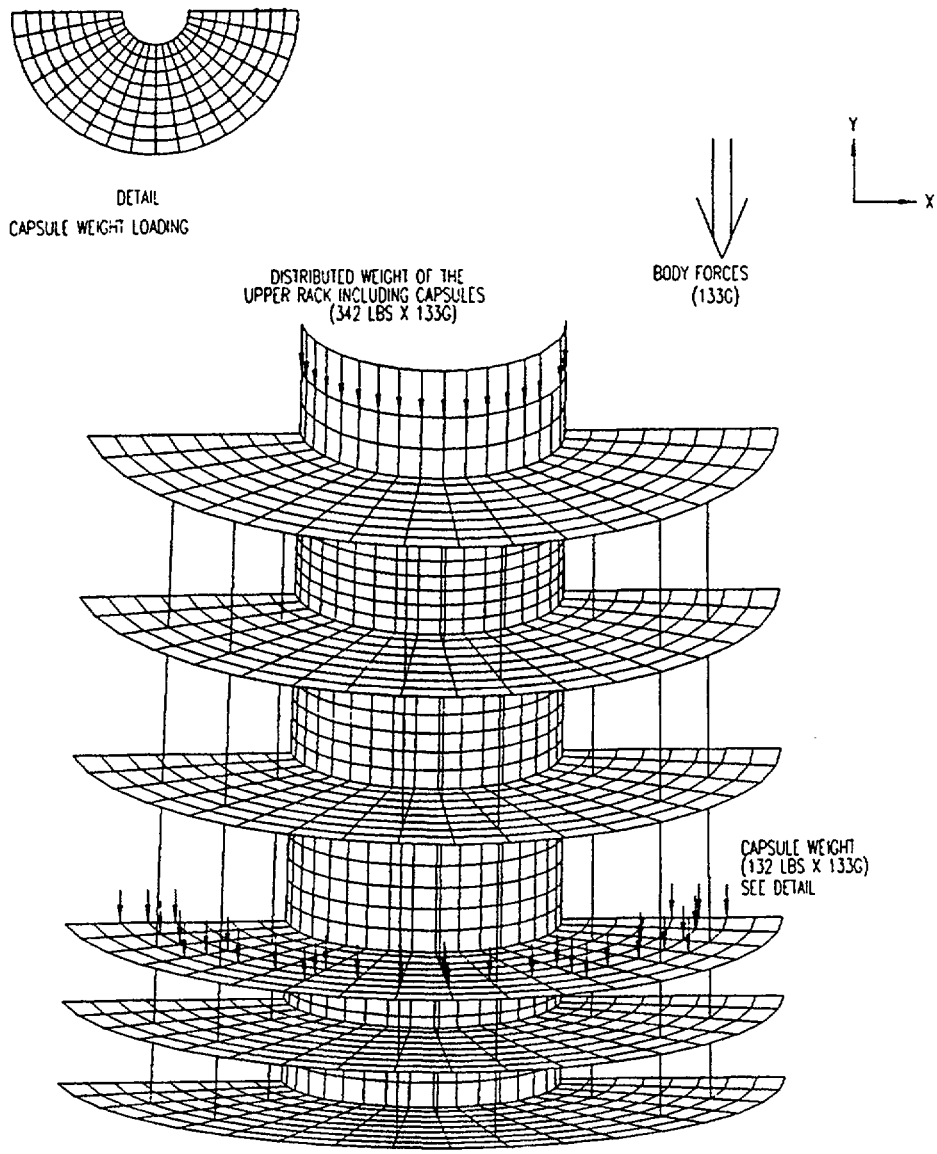


**Figure 2.53. Accident Condition Bottom Drop, Loadings**

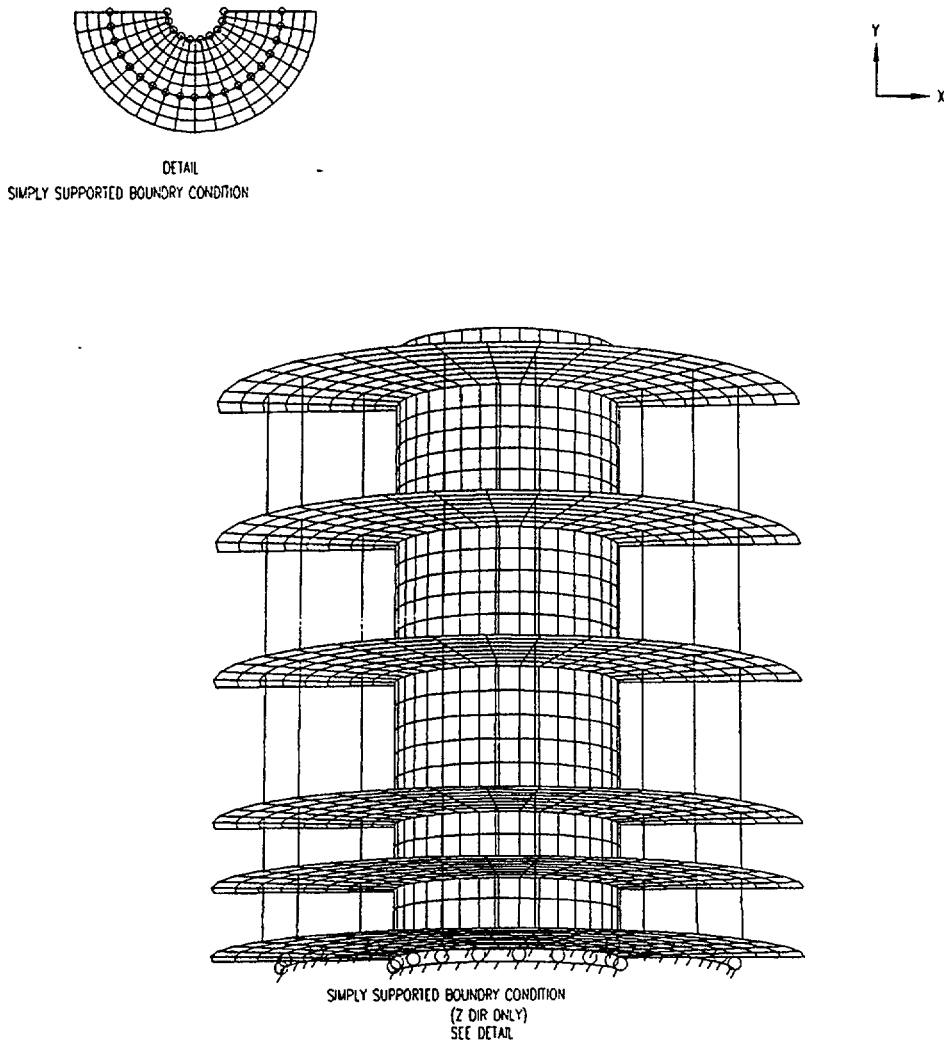


**Figure 2.54. Accident Condition Bottom Drop, Boundary Conditions**

**Table 2.193. Accident Condition Bottom Drop**

| Accident Condition | | | | | |
|---|---|---|---|---|---|
| | Stress Components | $P_m$ | $P_m + P_b$ | Shear(3) | |
| | Allowable Criteria | $2.4S_m$(1) | $3.6S_m$(2) | $0.42S_u$ | |
| | Allowable Values (ksi) | 36.48 | 54.72 | | |
| **Loading Condition** | **Max Stress Location** | **Component $P_m$** | **Allowable $2.4S_m$** | **Component $P_m + P_b$** | **Allowable $3.6S_m$** |
| **30 Foot Drop On Bottom** | **Rack Flange** | | | | |
| | 21 | 0.33 | 36.48 | 15.29 | 54.72 |
| | 125 | 0.30 | 36.48 | 15.26 | 54.72 |
| | 354 | 0.65 | 36.48 | 1.14 | 54.72 |
| | 394 | 0.60 | 36.48 | 1.12 | 54.72 |
| | 508 | 0.18 | 36.48 | 3.01 | 54.72 |
| | 1101 | 0.27 | 36.48 | 1.93 | 54.72 |
| | 1125 | 0.43 | 36.48 | 1.72 | 54.72 |
| | | | | | |
| | **Cylinder** | | | | |
| | 2007 | 5.24 | 36.48 | 9.00 | 54.72 |
| | 2019 | 4.33 | 36.48 | 8.06 | 54.72 |
| | 2431 | 5.90 | 36.48 | 11.59 | 54.72 |
| | | | | | |
| | **Supports** | | | | |
| | 3106 | 7.03 | 36.48 | 12.06 | 54.72 |
| | 3125 | 2.70 | 36.48 | 4.41 | 54.72 |
| | 3225 | 2.81 | 36.48 | 4.37 | 54.72 |
| | 3601 | 8.61 | 36.48 | 21.19 | 54.72 |
| | 3801 | 8.65 | 36.48 | 21.11 | 54.72 |

Note 1: $2.4S_m$ was the lesser value when compared to $0.7S_u$.

Note 1: $3.6S_m$ was the lesser value when compared to $S_u$.

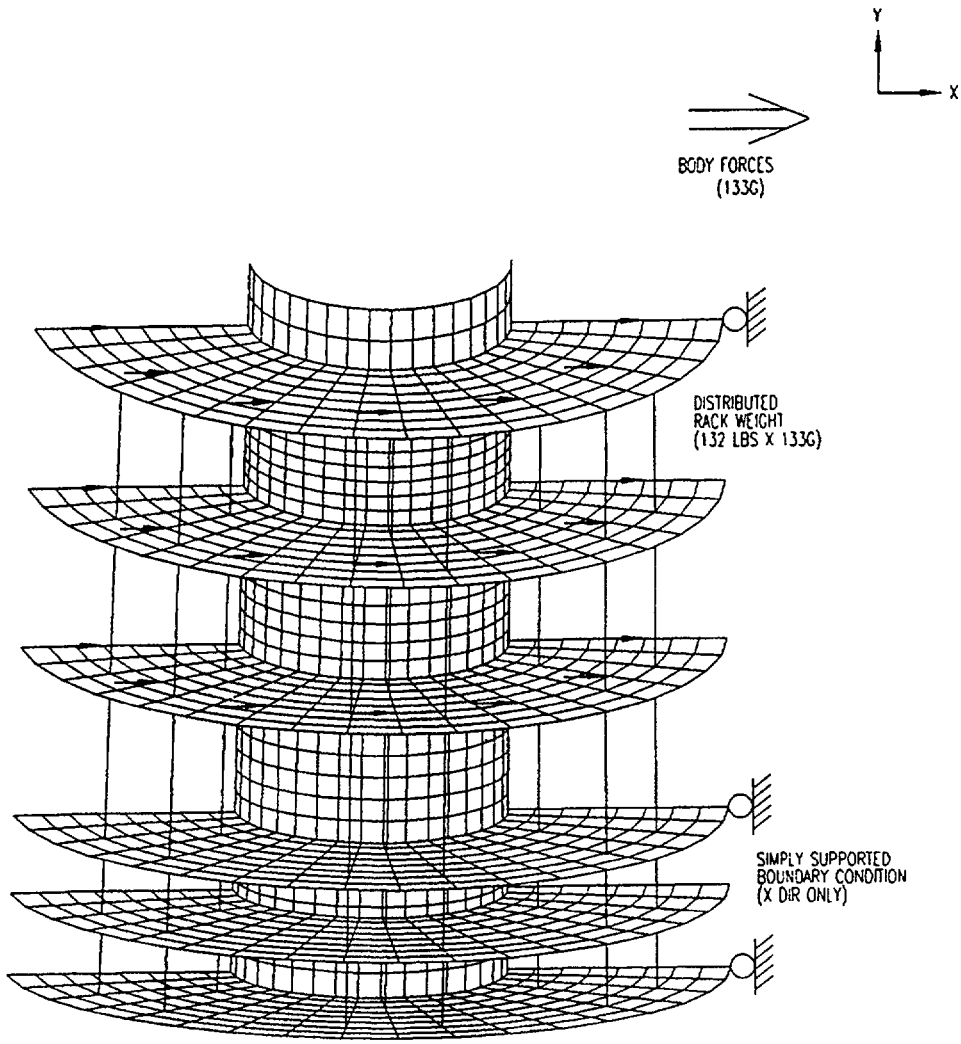


**Figure 2.55. Accident Side Drop**

**Table 2.194. Accident Condition Side Drop**

**Accident Condition**

| Stress Components | $P_m$ | $P_m + P_b$ | Shear(3) |
|---|---|---|---|
| Allowable Criteria | $2.4S_m$(1) | $3.6S_m$(2) | $0.42S_u$ |
| Allowable Values (ksi) | 36.48 | 54.72 | |

| Loading Condition | Max Stress Location | Component $P_m$ | Allowable $2.4S_m$ | Component $P_m + P_b$ | Allowable $3.6S_m$ |
|---|---|---|---|---|---|
| 30 Foot Drop On Side | **Rack Flange** | | | | |
| | 21 | 1.09 | 36.48 | 3.65 | 54.72 |
| | 125 | 0.08 | 36.48 | 0.41 | 54.72 |
| | 354 | 0.04 | 36.48 | 0.32 | 54.72 |
| | 394 | 0.04 | 36.48 | 0.40 | 54.72 |
| | 508 | 15.24 | 36.48 | 25.31 | 54.72 |
| | 1101 | 2.17 | 36.48 | 8.21 | 54.72 |
| | 1125 | 2.29 | 36.48 | 10.41 | 54.72 |
| | | | | | |
| | **Cylinder** | | | | |
| | 2007 | 0.35 | 36.48 | 4.62 | 54.72 |
| | 2019 | 5.13 | 36.48 | 6.60 | 54.72 |
| | 2431 | 1.43 | 36.48 | 2.54 | 54.72 |
| | | | | | |
| | **Supports** | | | | |
| | 3106 | 0.08 | 36.48 | 2.06 | 54.72 |
| | 3125 | 0.19 | 36.48 | 2.25 | 54.72 |
| | 3225 | 0.79 | 36.48 | 4.02 | 54.72 |
| | 3601 | 0.10 | 36.48 | 0.94 | 54.72 |
| | 3801 | 0.10 | 36.48 | 0.85 | 54.72 |

Note 1: $2.4S_m$ was the lesser value when compared to $0.7S_u$.

Note 1: $3.6S_m$ was the lesser value when compared to $S_u$.

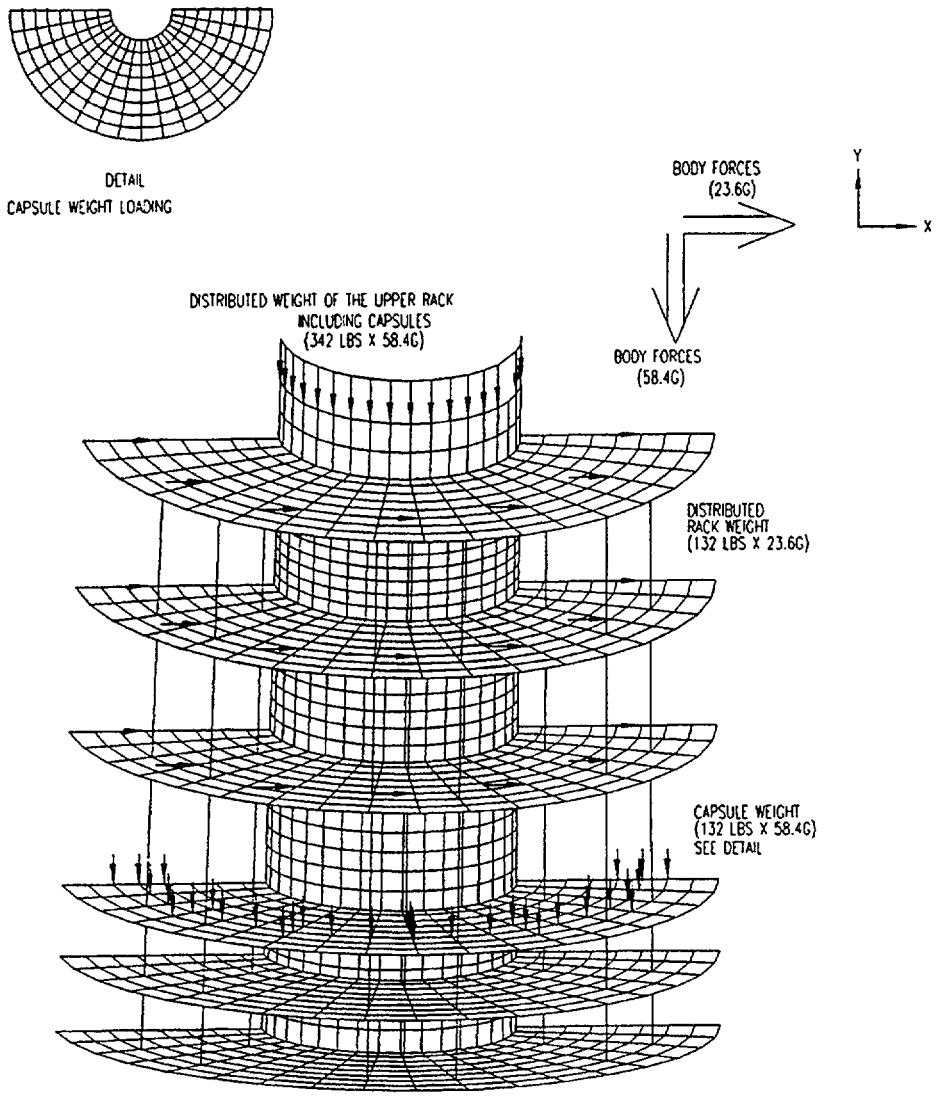


**Figure 2.56. Accident CG Over Corner Drop, Loadings**

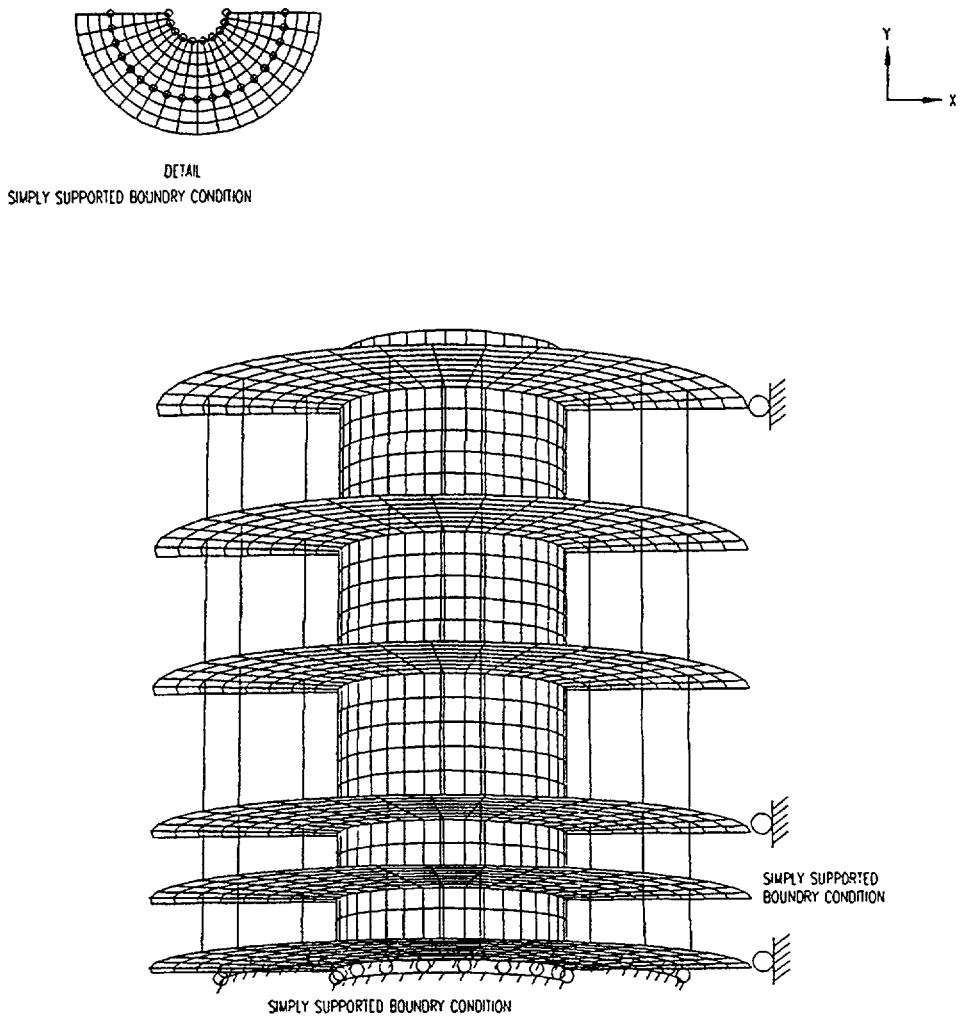


**Figure 2.57. Accident Condition CG Over Corner Drop, Boundary Conditions**

**Table 2.195. Accident Condition Cg Over Corner**

**Accident Condition**

| Stress Components | $P_m$ | $P_m + P_b$ | Shear(3) |
|---|---|---|---|
| Allowable Criteria | $2.4S_m$(1) | $3.6S_m$(2) | $0.42S_u$ |
| Allowable Values (ksi) | 36.48 | 54.72 | |

| Loading Condition | Max Stress Location | Component $P_m$ | Allowable $2.4S_m$ | Component $P_m + P_b$ | Allowable $3.6S_m$ |
|---|---|---|---|---|---|
| 30 Foot Drop Cg Over Corner | **Rack Flange** | | | | |
| | 21 | 0.24 | 36.48 | 6.81 | 54.72 |
| | 125 | 0.13 | 36.48 | 6.70 | 54.72 |
| | 354 | 0.29 | 36.48 | 0.50 | 54.72 |
| | 394 | 0.27 | 36.48 | 0.49 | 54.72 |
| | 508 | 2.71 | 36.48 | 5.68 | 54.72 |
| | 1101 | 0.40 | 36.48 | 1.23 | 54.72 |
| | 1125 | 0.45 | 36.48 | 1.15 | 54.72 |
| | | | | | |
| | **Cylinder** | | | | |
| | 2007 | 2.30 | 36.48 | 3.95 | 54.72 |
| | 2019 | 2.11 | 36.48 | 3.98 | 54.72 |
| | 2431 | 2.60 | 36.48 | 5.11 | 54.72 |
| | | | | | |
| | **Supports** | | | | |
| | 3106 | 3.09 | 36.48 | 5.32 | 54.72 |
| | 3125 | 1.18 | 36.48 | 2.02 | 54.72 |
| | 3225 | 1.24 | 36.48 | 2.14 | 54.72 |
| | 3601 | 3.80 | 36.48 | 9.33 | 54.72 |
| | 3801 | 3.82 | 36.48 | 9.29 | 54.72 |

Note 1: $2.4S_m$ was the lesser value when compared to $0.7S_u$.

Note 1: $3.6S_m$ was the lesser value when compared to $S_u$.

**2.11.4.8.6 Oblique Drop.** The oblique drop orientations are bounded by the end and side drop loading conditions and need not be evaluated as described in Subsection 2.7.1. Further discussion of oblique drops is provided in Paragraph 2.7.1.4 of Reference [2.3].

**2.11.4.8.7 Summary of Results.** The accident drop condition maximum stresses are summarized in Table 2.196. As can be seen from the table, all stresses are well within allowable limits. Therefore, the integrity of the Multifunctional rack assembly is maintained and remains fully functional for all accident drop conditions.

**2.11.4.8.8 Puncture.** Puncture conditions do not apply to the Multifunctional rack assembly and need not be specifically addressed. The effects of the basket assembly on the cask body puncture analysis is negligible. As discussed previously in Subsection 2.1.1, the basket loading on the cask body remains well within the currently licensed limits.

**2.11.4.8.9 Thermal.** The thermal evaluation of the Multifunctional rack assembly for the accident event is presented in Chapter 3.0. The structural evaluation of the resulting temperature distributions is presented in Subsection 2.6.1.

**2.11.4.8.10 Summary of Damage.** Table 2.196 presents the summary of maximum stresses in the Multifunctional rack assembly during the various accident conditions, which shows adequate margin of safety throughout. It is therefore concluded that the Multifunctional rack assembly meets the design criteria when subjected to the accident conditions as specified in 10CFR71.73 [2.1].

**Table 2.196. Summary of Results for Accident Conditions**

| Loading Conditions | High Stress Element | Element Location | Stress Type | Stress (ksi) | Allowable (ksi) | Margin of Safety |
|---|---|---|---|---|---|---|
| **Normal Conditions** | | | | | | |
| 30 Foot Head On Drop (Load) | 2431 | Cylinder | $P_m + P_b$ | 14.03 | 54.72 | 2.90 |
| 30 Foot Bottom Drop (Load) | 3601 | Supports | $P_m + P_b$ | 21.19 | 54.72 | 1.58 |
| 30 Foot Side Drop (Load) | 508 | Rack Flange | $P_m + P_b$ | 25.31 | 54.72 | 1.16 |
| 30 Foot Cg Over Corner Drop (Load) | 3601 | Supports | $P_m + P_b$ | 9.33 | 54.72 | 4.87 |

**2.11.4.9 Buckling Analysis.** Buckling of the Multifunctional rack is not a likely failure mechanism because the loads are designed to pass through the center cylinder which is a thick cylinder solidly designed with 0.38 inch thick SS304. General stability mode as well as local instability (crippling) is investigated. Since the maximum compressive stresses occurs during the accident condition of 30 fit drop case, it is used to compare with the buckling stresses.

For general instability, Euler's Formula is used. From Roark and Young [2.16], for a cylinder under uniform compression, the critical or buckling load is

$$P_{cr} = K \cdot \frac{\pi^2 \cdot E \cdot I}{l^2} \qquad \text{or} \qquad \sigma_{cr} = K \cdot \frac{\pi^2 \cdot E \cdot I}{A \cdot l^2}$$

where
$P_{cr}$ = Critical uniform radial compression
$\sigma_{cr}$ = Critical compressive stress
$E$ = Elastic modulus of S.S. 304 = $25\times10^6$ psi at 600°F
$I$ = Cross-sectional moment of inertia = 63 $in^4$
$A$ = Cross-sectional area = 7.0 $in^2$
$l$ = Maximum unsupported length of the cylinder = 10 in
$K$ = A factor for different boundary conditions = 1.0

In the above calculation, smaller size of the center cylinder (6.0 diameter rather than 10.0 inch diameter) is used, and K value of 1.0 is used conservatively (4.0 is the theoretical value of K). The general buckling stress is calculated to be $22.2\times10^6$ psi, while the maximum compressive stress in the cylinder as given by the LIBRA finite element analysis is 14,000 psi, which shows that no buckling in this mode is likely.

A local instability mode can result from cylindrical buckling under compressive loading. From Bruhn [2.12], page C8.3, equation C8.5, the critical buckling stress for a cylinder under compressive loading is calculated as

$$\sigma_{cr} = c \cdot E \cdot (t/r)$$

where
E = Elastic Modulus of S.S. 304 = $25\times10^6$ psi at 600°F
t = Thickness of the cylinder = 0.38 inch
r = Radius of the cylinder = 3.0 inch
c = Buckling coefficient = 0.15

In estimating the elastic buckling stresses in the above calculation, although Bruhn [2.12] recommends a typical buckling coefficient of 0.605 for materials with 0.3 Poisson's ratio, a more conservative value of 0.15 is used here. The above equation gives the local buckling stress of $4.8\times10^5$ psi, which results in a large margin when compared to the LIBRA prediction of 14,000 psi. Therefore it is concluded that the design of the basket and liner is adequate against buckling.

For consideration of inelastic buckling, the yield strength of the SS304 is used as the inelastic buckling criteria. As mentioned above, the maximum compressive stresses in the cylinder for the 30 fit bottom drop condition is 14,000 psi, which gives a sufficient margin compared to the yield strength of 18,200 psi at 600°F.

**2.11.4.10 Fatigue Evaluation.** The fatigue evaluation of the Multifunctional Rack follows the same procedure discussed in Section 2.11 of Appendix 2.11 for the Transportation Package. The cycling stresses of the Multifunctional Rack are caused by the shock and vibration during transportation of the Transport Package and cyclic thermal stresses during its service. The fatigue damage is not much of a concern because of low stresses for shock and vibration condition, and because of small number of cycles for the thermal stresses condition.

It has been also shown in Subsection 2.11.1 of Appendix 2.11 that fatigue analysis is not required, since the conditions specified in subparagraph NE-3222.4 under (d), conditions (1) through (6) of Reference [2.5]. However, to eliminate the possibility of any concern, by any reviewer, about the fatigue phenomena on the Multifunctional Shipping Rack, the fatigue analysis is done to show that the maximum bound on the fatigue usage factor U would be less than 1.0.

There are two basic classes of stress cycles applicable to the structure: 1) mechanical shock and vibration, and 2) thermal stress cycles. While the latter, (2) has a stress range that far exceeds that of the former, (1), the stress cycles of (1) occur at a rate which far exceed the rate for (2), the fundamental period of vibration is 0.00208 seconds (corresponding to the fundamental frequency 480 Hz as discussed in Paragraph 2.11.2.1) and the shortest period of a thermal cycle is on the order of 24 hours, yielding the ratio of $\sim 30 \cdot 10^6$ for the cycling ratio between the two. This means that the cycling of (1) occurs at a mean stress level which is provided by (2) and varying very slowly. For this reason, Curve C of Appendix I, Reference [2.5], which includes the maximum mean stress effect, is conservatively used for shock and vibration.

**2.11.4.10.1 Shock and Vibration.** Referring to Table 2.182 for the shock and vibration condition, the highest stress occurs at the bottom circular plate. Although stress concentration is not likely to occur in this area, stress concentration factor of 4 is used in calculation of stress amplitude. The stress amplitude is calculated as, adjusting for the elastic modules according to Subsection NE of the ASME code,

$$S_a,tr = (1.18)\cdot(4) \cdot (28.3\times10^6 / 25.3\times10^6) = 5.3 \text{ ksi}$$

This result is well in excess of $10^{11}$ cycles from Curve C of Figure I-9.2.2.

The number of stress cycles during transportation is estimated for the service life of 100 years, assuming that conservatively, there are yearly 52 round trips of 10 hours duration each way and using the fundamental frequency of 480 Hz (estimated conservatively from the modal analysis of the same finite element model), as

$$Ntr = (480 \text{ cycles/sec}) \cdot (52\cdot2\cdot10\cdot3600 \text{ sec}) \cdot 100 \text{ years} = 1.8 \cdot 10^{11} \text{ total cycles}$$

Even if $10^{13}$ allowable cycles were used (it should be noted that extrapolating Curve C of Figure I-9.2.2, for 2.1 ksi, $10^{25}$ is a more proper number to use), for transportation shock and vibration cycles

$$Utr < 1.8 \cdot 10^{11}/10^{13} = +0.02$$

**2.11.4.10.2 Thermal Stresses.** For the sake of simplicity and the conservative analysis, the maximum extremes of temperatures (-20°F and 100°F) are selected to simulate the thermal stress cycle conditions. For one year period, the temperatures are assumed to vary between -20°F and 100°F every day. In addition, in lieu of examining the cumulative damage ratios at several candidate points, the fatigue usage ratio from the highest stresses caused by shock and vibration and that from the highest stresses caused by thermal cycles will be used. This is the most obvious way to convey the final conclusion. Note that these two categories of stresses will be at different locations.

For the thermal stress cycle the highest stress range is at the support pipe. According to NB-3216 of Reference [2.5], the cyclic stress amplitude $S_a$ is calculated, again using a stress concentration factor of 4,

$$S_a, th = 4 \cdot (9.0 - 6.5)/2 \cdot (28.3 \times 10^6 / 25.0 \times 10^6) = 5.7 \text{ ksi}$$

From Curve C of Figure I-9.2.2, for $S_a = 5.7$ ksi at $10^{11}$ cycles, the fatigue usage is then

$$Uth = 100 \cdot 365/10^{11} = +0.00$$

It is therefore follows that the total fatigue usage is

$$U = Utr + Uth = +0.02 < 1.0.$$

As expected, the total fatigue usage factor is negligible in this case because of low level of stresses compared to the allowable.

**2.11.4.11 Effect of Different Multifunctional Rack Configuration.** As discussed in Chapter 1, the Multifunctional rack has quite a few different configurations for different types of radioactive materials to be shipped. Out of all these rack configurations, the optional multifunctional rack designed to be used without any liner was selected for analyses, which was calculated to give the highest stresses.

Of all the structural components of the rack, the circulate plate where all radioactive materials are being supported is expected to give the highest stresses during the top and bottom drop conditions. Compared to the top and side drop conditions, the bottom drop will induce the higher stresses in the plate, since during the bottom drop condition, the weight of the whole upper rack is supported by the lower rack. Therefore, comparisons among the different rack geometries are made by a simple model of the plate.

Modeling the plate as a circular plate with a hole with inner edge fixed and outer edge free as shown in the following figure,

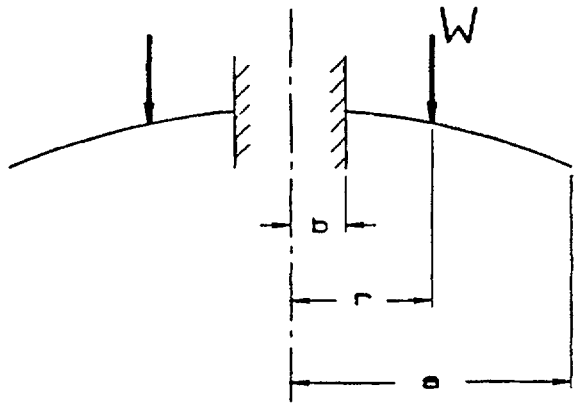


where a = Outer radius of the plate
b = Inner radius of the plate
r = Radius of loading location
W = Weight Loading

According to Roark and Young [2.16], the maximum stresses may be calculated as follows:

$$\sigma = \frac{6M}{t}$$

$$M = \frac{wa^2}{c_8}\left[\frac{rc_9}{b} - L_9\right]$$

where w = W/2πr

$$c_8 = \left[1 + v + (1-v)\left(\frac{b}{a}\right)^2\right]$$

$$c_9 = \frac{b}{a}\left[\frac{1+v}{2}\ln\frac{a}{b} + \frac{(1-v)}{4}\left\{1-\left(\frac{b}{a}\right)^2\right\}\right]$$

$$L_9 = \frac{r}{a}\left[\frac{1+v}{2}\ln\frac{a}{r} + \frac{(1-v)}{4}\left\{1-\left(\frac{r}{a}\right)^2\right\}\right]$$

$v$ = Poisson's ratio = 0.3

Six different configurations are compared - two configurations for the rack without the liner (config 1 and 2 below) and four configurations with the liner in place (config 3 through 6 below). The configurations are chosen in a way such that the upper and lower bounds of the variables, a, b and r are covered. Results for the various geometries using the equations are tabulated as follows:

| | **Rack without Liner** | | **Rack with Liner** | | | |
|---|---|---|---|---|---|---|
| | **Config 1** | **Config 2** | **Config 3** | **Config 4** | **Config 5** | **Config 6** |
| a (inch) | 13.00 | 13.00 | 9.88 | 9.88 | 9.88 | 9.88 |
| b (inch) | 5.00 | 5.00 | 4.00 | 4.00 | 2.50 | 2.50 |
| r (inch) | 10.50 | 8.00 | 6.75 | 5.25 | 6.75 | 5.25 |
| t (inch) | 0.38 | 0.38 | 0.38 | 0.38 | 0.38 | 0.38 |
| W (lbs) | 132 | 132 | 132 | 132 | 132 | 132 |
| $c_8$ | 1.404 | 1.404 | 1.415 | 1.415 | 1.345 | 1.345 |
| $c_9$ | 0.296 | 0.296 | 0.297 | 0.297 | 0.268 | 0.268 |
| $L_9$ | 0.161 | 0.261 | 0.233 | 0.285 | 0.233 | 0.285 |
| M (in-lbs) | 111 | 67 | 58 | 29 | 110 | 80 |
| $\sigma$ (psi) | 1776 | 1077 | 922 | 463 | 1768 | 1285 |

From this table, it can be easily seen that the configuration 1, which is a Multifunctional rack without the liner, gives the highest stresses. All the analyses of the Multifunctional rack is done on this geometry.

### 2.11.5 Cask Content Weight Combinations

The Maximum Contents weight of the 2000 Transport Package, as defined in Section 2.2, is 5450 pounds. Maximum Contents may consist of the liner, liner lid, a rack, material/contents, or any combination of these. Table 2.197 shows several credible combinations of Maximum Contents components.

**Table 2.197. Selected Combinations of Maximum Contents Components**

| Contents and Weights (lbs) | Case | | | | | |
|---|---|---|---|---|---|---|
| | 1 | 2 | 3 | 4 | 5 | 6 |
| 52" Barrel Rack | 4790[3] | – | – | – | – | – |
| 44" Barrel Rack | – | 993 | 993 | – | – | – |
| Multifunctional Rack (19.75" OD) | – | – | – | 606[1] | 606[1] | – |
| Multifunctional Rack (26.00" OD) | – | – | – | – | – | 1092[1] |
| Lead Liner | – | 3650 | 3650 | 3650 | 3650 | – |
| Lead Liner Lid | – | 615 | – | 615 | – | – |
| Material/Contents (Max) | 660[2] | 192 | 807 | 579[2] | 1194[2] | 4358[2] |
| Maximum Contents Weight | 5450 | 5450 | 5450 | 5450 | 5450 | 5450 |

[1] The weights shown for the Multifunctional Racks reflect the combination of parts resulting in the heaviest rack (depending on desired configuration, a number of rack dimensions are variables).

[2] The use of a lighter weight rack will result in a corresponding increase in the maximum weight of the material/contents transported in the rack.

[3] The weights shown for the Barrel Rack reflect the heaviest rack (depending on desired configuration, a number of rack dimensions are variables).