71-9235

NAC INTERNATIONAL

Atlanta Corporate Headquarters
3930 East Jones Bridge Road, Suite 200
Norcross, GA 30092
Phone 770-447-1144
Fax 770-447-1797
www.nacintl.com

August 4, 2005

U.S. Nuclear Regulatory Commission
11555 Rockville Pike
Rockville, MD 20852-2738

Attn: Document Control Desk

Subject: Submittal of a Request for an Amendment of Certificate of Compliance (CoC) No. 9235 for the NAC-STC Cask to Incorporate Vacuum Drying Enhancements for Connecticut Yankee (CY), Licensing Drawing Updates and the "-96" Package Designation

Docket No. 71-9235

Reference:
1. Model No. NAC-STC Package, Certificate of Compliance (CoC) No. 9235, Revision 8, U.S. Nuclear Regulatory Commission (NRC), March 31, 2004
2. Safety Analysis Report (SAR) for the NAC Storage Transport Cask, Revision 15, NAC International, March 2004

NAC International (NAC) herewith submits a request for approval of an Amendment to Reference 1 to incorporate the Connecticut Yankee (CY) vacuum drying enhancements, various licensing drawing updates and the "-96" package designation.

As part of the CY vacuum drying enhancements, as previously approved by the Commission in CY Amendments MPC-03A and MPC-03B, this application incorporates the definition of the CY fuel inserts and intact fuel assembly, and the option of inserting solid stainless steel rods into CY intact and damaged fuel assembly reactor control cluster assembly (RCCA) guide tubes not containing RCCA. In addition, 17 license drawings were revised to bring the NAC-STC SAR up to date. The application includes the required information to support the "-96" designation for the package identification, as well as various editorial changes.

This submittal includes eight copies of this transmittal letter and Revision STC-05A changed pages for Reference 2. The changed pages incorporate the requested amendment. Consistent with NAC administrative practice, this proposed revision is numbered to uniquely identify the applicable changed pages. Revision bars mark the SAR text changes (on Revision STC-05A pages) that are proposed in this submittal. Upon final approval, the changed pages will be reformatted, assigned the next appropriate revision number, and incorporated into the NAC-STC SAR.

NMSS01

ED20050058

NAC INTERNATIONAL

In this amendment request, the CY vacuum drying enhancements are described in Chapter 1. The changes marked are based on the previously approved MPC-03A and MPC-03B amendments.

Seventeen revised license drawings are included in this submittal to bring Reference 2 up to date. Intermittent license drawing revisions not included in this application for amendment cover non-U.S. application of the NAC-STC cask and do not apply.

The NAC-STC SAR has been updated throughout as necessary to incorporate information required by current regulations for the "-96" package designation. Editorial changes have been made throughout the NAC STC SAR.

All changes have been tabulated in the List of Changes for the NAC-STC SAR, Revision STC-05A (Attachment 1 to this letter). All drawing changes are listed in the List of Drawing Changes for NAC-STC SAR, Revision STC-05A (Attachment 2 to this letter). Disposition of the "-96" Designator Issues Affecting 10 CFR 71 Licensees has been documented in Attachment 3 to this transmittal letter.

Approval of this amendment request will bring the NAC-STC SAR up to date. NAC respectfully requests approval of this amendment request by November 30, 2005. In support of this request, NAC will provide proposed revised wording of the CoC by October 31, 2005.

If you have any comments or questions, please contact me on my direct line at 678-328-1274.

Sincerely,

Anthony L Patko
Director, Licensing
Engineering

Enclosures

ED20050058

Attachment 1

List of Changes

for

NAC-STC SAR, Revision STC-05A

NAC International

June 2005

List of Changes for the NAC-STC SAR, Revision STC-05A (based on Revision 15 of the NAC-STC SAR dated March 2004)

Incorporates Connecticut Yankee Amendments MPC-03A and MPC-03B*, & DCR(L) Nos. 423-SAR-15A & 423-SAR-15B

Chapter/Page/ Figure/Table	Source of Change: Amendment No./ DCR(L) No./ -96 Requirement/ Editorial	Description of Change
Note: The List of Effective Pages and the affected Chapter Tables of Contents have been revised accordingly to reflect the changes detailed below.		
Chapter 1		
Page 1-iii	Various sources	14 drawings were revised to bring the NAC-STC SAR up to date
Page 1-iv	DCR(L) 423-SAR-15A	2 drawings were revised to bring the NAC-STC SAR up to date
Page 1-v	Various sources	1 drawing was revised to bring the NAC-STC SAR up to date
Page 1-1	-96 requirement	Section 1.0, 4th paragraph, 3rd sentence – changed " the Transport Index based on nuclear criticality safety is zero" to "the Criticality Safety Index (CSI) is zero"
Page 1-7, Table 1-1	Amendment MPC-03A	Revised the definition for Connecticut Yankee Fuel Inserts
Page 1-9, Table 1-1	Amendment MPC-03A	Revised the definition for Intact Fuel Assembly
Page 1.1-1	Editorial	Section 1.1, 2nd paragraph – added "and Framatome-Cogema 17×17 PWR fuel assemblies"
Page 1.1-2	Editorial	2nd full paragraph – capitalized O-ring in 3 places; 3rd paragraph – capitalized O-rings and removed hyphen from nonmetallic; 4th paragraph – capitalized O-ring in 6 places; 5th paragraph – capitalized O-rings; deleted former 6th paragraph; last paragraph, 1st sentence – changed "IAEA Safety Series No. ST-1" to "IAEA Safety Series No. TS-R-1"
Page 1.1-3	Editorial	Old 3rd full paragraph – deleted; new 3rd paragraph – capitalized O-ring(s) in 4 places; 4th paragraph – capitalized O-rings; 5th paragraph – capitalized O-rings in 2 places; last paragraph – capitalized O-rings in 3 places & added "or for the transport of canistered contents"
Page 1.1-4	Editorial	1st paragraph – capitalized O-ring in 2 places; 2nd paragraph – capitalized O-rings
Page 1.1-7	Editorial	2nd paragraph, 1st sentence – deleted "or with"; inserted acronym (RCCA); added "or stainless steel rods"
Page 1.2-5	Editorial	Section 1.2.1.2.2, 1st sentence – capitalized O-rings; 2nd sentence – capitalized O-rings and deleted hyphen from nonmetallic

* No changes from the approved MPC-03B amendment were applicable to this NAC-STC transport amendment submittal.

Chapter/Page/ Figure/Table	Source of Change: Amendment No./ DCR(L) No./ -96 Requirement/ Editorial	Description of Change
Page 1.2-6	Editorial	1st full paragraph – capitalized O-ring(s) in 10 places; removed hyphen from nonmetallic in 3 places; 7th sentence – added "of directly loaded fuel"; last sentence – changed "Viton O-rings" to "nonmetallic O-rings" Section 1.2.1.2.3, 1st paragraph, 1st sentence – capitalized O-ring; 2nd paragraph – capitalized O-ring in 2 places and deleted the hyphen from nonmetallic
Page 1.2-9	Editorial	Section 1.2.1.2.6, next to last line – changed "which" to "and"; last line – changed "contents" to "content"
Page 1.2-21	Editorial	Section 1.2.2, 4th sentence – revised throughout
Page 1.2-22	Editorial	Item 7 – changed "IAEA Safety Series No. ST-1" to "IAEA Safety Series No. TS-R-1"; Item 8 – changed "IAEA Safety Series No. ST-1" to "IAEA Safety Series No. TS-R-1"
Page 1.2-23	Amendment MPC-03A	3rd paragraph – inserted new paragraph to address the option of inserting solid stainless steel rods into CY intact and damaged fuel assembly RCCA guide tubes not containing a RCCA
Page 1.2-42, Table 1.2-4	Amendment MPC-03A	Revised footnote 5 and added new footnote 9
Chapter 2		
Page 2-1	-96 requirement	Section 2.0, 1st paragraph, 2nd sentence – changed "IAEA Safety Series No. 6" to "IAEA TS-R-1"
Page 2-1.1-2	-96 requirement	1st full paragraph, 1st sentence – changed "IAEA Safety Series No. ST-1" to "IAEA TS-R-1"
Page 2-1.1-4	-96 requirement	1st partial paragraph, 1st line – changed "paragraph 506 of IAEA Safety Series No. ST-1" to "paragraph 607 of IAEA TS-R-1"
Page 2.6.15.1-2	DCR(L) 423-SAR-15A	Last sentence – changed "+0.58" to "+0.30"
Page 2.6.15.3-3, Figure 2.6.15.3-1	DCR(L) 423-SAR-15A	Revised four rows of table at bottom of figure
Page 2.6.15.3-4, Table 2.6.15.3-1	DCR(L) 423-SAR-15A	Revised table throughout
Page 2.6.15.4-1	DCR(L) 423-SAR-15A	Section 2.6.15.4, 2nd paragraph, 1st sentence – changed "top end and bottom end orientations" to "top end and bottom end drop orientations" Table, 3rd column – revised throughout; paragraph immediately following table – revised throughout Last paragraph, 2nd sentence – changed "Tables 2.6.15.4-2 through 2.6.15.4-7" to "Tables 2.6.15.4-2 through 2.6.15.4-5"
Page 2.6.15.4-2, Table 2.6.15.4-1	DCR(L) 423-SAR-15A	Revised table throughout; deleted Note
Page 2.6.15.4-3, Table 2.6.15.4-2	DCR(L) 423-SAR-15A	Note: Original Tables 2.6.15.4-2 & 2.6.15.4-3 deleted & the four subsequent tables were renumbered. Revised table number and table throughout; revised notes
Page 2.6.15.4-3, Table 2.6.15.4-3	DCR(L) 423-SAR-15A	Revised table number and table throughout; revised notes
Page 2.6.15.4-4, Table 2.6.15.4-4	DCR(L) 423-SAR-15A	Revised table number and table throughout; revised notes

Chapter/Page/ Figure/Table	Source of Change: Amendment No./ DCR(L) No./ -96 Requirement/ Editorial	Description of Change
Page 2.6.15.4-4, Table 2.6.15.4-5	DCR(L) 423-SAR-15A	Revised table number and table throughout; revised notes
Page 2.6.15.5-1	DCR(L) 423-SAR-15A	Section 2.6.15.5 – revised sentences 6, 7, 8 & 9
Page 2.6.15.6-2	DCR(L) 423-SAR-15A	Revised 3rd sentence
Page 2.6.15.6-3, Table 2.6.15.6-1	DCR(L) 423-SAR-15A	Revised table and notes throughout
Page 2.6.15.6-3, Table 2.6.15.6-2	DCR(L) 423-SAR-15A	Revised table and notes throughout
Page 2.6.15.7-1	DCR(L) 423-SAR-15A	Section 2.6.15.7 – revised sentences 5 & 6
Page 2.6.15.8-1	DCR(L) 423-SAR-15A	Section 2.6.15.8 – revised throughout
Page 2.6.15.9-1	DCR(L) 423-SAR-15A	Section 2.6.15.9, 1st paragraph – revised throughout
Page 2.6.15.12-1	DCR(L) 423-SAR-15A	Section 2.6.15.12.1, 1st paragraph, 1st sentence – changed "1.13 inches" to "0.75 inch" Table in 2nd paragraph – revised throughout
Page 2-7.4-1	-96 requirement	Section 2.7.4, 1st line – changed "IAEA Safety Series No. 6, paragraph 627(c)" to "IAEA TS-R-1, paragraph 727(c)"
Page 2-7.5-1	-96 requirement	Section 2.7.5, 1st paragraph, 1st sentence – changed "a period of 8 hours" to "a period of not less than 8 hours"; 3rd sentence – changed "Paragraph No. 633 of IAEA Safety Series No. 6" to "Paragraph No. 733 of IAEA TS-R-1"
Page 2-7.6-1	-96 requirement	Section 2.7.6, 1st paragraph, 1st sentence – changed "a period of 8 hours" to "a period of not less than 8 hours"; 2nd sentence – changed "Paragraph 630 of IAEA Safety Series No. 6" to "Paragraph 730 of IAEA TS-R-1"
Page 2.7.12-3	DCR(L) 423-SAR-15A	1st paragraph, last sentence – changed "+0.65 for the weld" to "+0.77 for the weld (Section 8)"
Page 2.7.12-5	DCR(L) 423-SAR-15A	Table revised throughout
Page 2.7.12-6, Figure 2.7.12-1	DCR(L) 423-SAR-15A	Revised four rows of table at bottom of figure
Page 2.7.12-7, Table 2.7.12-1	DCR(L) 423-SAR-15A	Revised table and notes throughout
Page 2.7.12-7, Table 2.7.12-2	DCR(L) 423-SAR-15A	Revised table and notes throughout
Page 2.7.12-8, Table 2.7.12-3	DCR(L) 423-SAR-15A	Revised table and notes throughout
Page 2.7.12-8, Table 2.7.12-4	DCR(L) 423-SAR-15A	Revised table and notes throughout
Page 2.7.12-9, Table 2.7.12-5	DCR(L) 423-SAR-15A	Revised table and notes throughout
Page 2.7.12-9, Table 2.7.12-6	DCR(L) 423-SAR-15A	Revised table and notes throughout
Page 2.7.12-10, Table 2.7.12-7	DCR(L) 423-SAR-15A	Revised table throughout

Chapter/Page/ Figure/Table	Source of Change: Amendment No./ DCR(L) No./ -96 Requirement/ Editorial	Description of Change
Chapter 3		
Page 3.1-1	-96 requirement	Section 3.1, 2nd paragraph – changed "IAEA Safety Series No. 6" to "IAEA TS-R-1"
Page 3.1-2	-96 requirement	1st full paragraph, next to last sentence – changed "IAEA Safety Series No. 6" to "IAEA TS-R-1"
Chapter 4		
Page 4.1-1	Editorial	Section 4.1, Containment Condition B – removed hyphen from nonmetallic & added "using metallic O-rings" to the end of condition
	-96 requirement	Deleted 3rd & 4th paragraphs
Page 4.1-2	-96 requirement	Section 4.1.1 – deleted 2nd & 3rd paragraphs 4th paragraph – changed "for both the cask body and the transportable storage canister" to "for the cask body" Section 4.1.2, 1st sentence – deleted "primary"; 2nd sentence – revised leak rate; deleted last paragraph
	Editorial	Section 4.1.2, 2nd sentence – capitalized O-rings in 2 places and removed hyphen from nonmetallic Section 4.1.3.1, 1st sentence – capitalized O-ring; 2nd sentence – capitalized O-rings in 2 places & removed hyphen from nonmetallic
Page 4.1-3	Editorial	1st partial paragraph, last sentence – capitalized O-rings Section 4.1.3.1.1 – revised throughout, including capitalized O-ring(s) in 7 places and removed hyphen from nonmetallic Section 4.1.3.1.2, 1st paragraph, 1st sentence – revised throughout 2nd paragraph, 1st sentence – deleted "seal or" and "o-ring or"; 2nd sentence – deleted "seal or"; added new 3rd sentence
Page 4.1-4	-96 requirement	Section 4.1.3.2, 1st sentence – revised throughout
	Editorial	Section 4.1.3.2, 2nd sentence – changed "is provided" to "are provided" Section 4.1.4, 1st paragraph, 1st sentence – added "containment" & capitalized O-rings 2nd paragraph, last sentence – capitalized O-ring in 2 places and removed hyphen from nonmetallic 3rd paragraph, last sentence – capitalized O-ring and removed hyphen from nonmetallic 4th paragraph, last sentence – capitalized O-rings in 2 places
Page 4.1-5, Table 4.1-1 (formerly page 4.1-6)	-96 requirement	1st column – deleted (Primary)
	Editorial	Capitalized O-ring(s) throughout 3rd column, 9th bullet – added "coverplate"; 10th bullet – added "coverplate" 5th column – deleted first two bullets; revised remaining bullet throughout

Chapter/Page/ Figure/Table	Source of Change: Amendment No./ DCR(L) No./ -96 Requirement/ Editorial	Description of Change
Page 4.1-6, Table 4.1-1 (split former page 4.1-7 into 2 tables – metallic and nonmetallic O-rings)	-96 requirement	1st column – deleted (Primary) & "or non-metallic (Viton)"; 4th column – deleted "For metallic o-rings" & "For non-metallic o-rings" & following 2 bullets; added "for each component test" to remaining 1st bullet
	Editorial	Capitalized O-ring(s) throughout
Page 4.1-7, Table 4.1-1	-96 requirement	Revised table throughout
Page 4.1-9, Table 4.1-2 (formerly page 4.1-10)	-96 requirement	Deleted Separate Inner Container information, which originally was on pages 4.1-10 & 4.1-11
	Editorial	1st column – added "shell-to-shell longitudinal and shell-to-shell circumferential"; 5th column – deleted "Section V, Art. 10 and"
Page 4.2-1	-96 requirement	Section 4.2, 1st paragraph – separated into 2 paragraphs for clarity 2nd paragraph, 2nd sentence – added 'in this configuration" 3rd paragraph, 4th sentence – added "or transport after interim storage"; last sentence – revised leak rates Deleted last paragraph Section 4.2.1 – deleted last 2 sentences
	Editorial	Section 4.2, 3rd paragraph – capitalized O-rings in 2 places Section 4.2.1 – capitalized O-ring(s) in 6 places; replaced non-metallic with Viton in 2 places
Page 4.2-3	-96 requirement	Section 4.2.2.2 – revised title; 2nd paragraph – added 3rd & 4th sentences for clarity Section 4.2.2.3 – revised title; 2nd paragraph – added 3rd & 4th sentences for clarity
Page 4.2-4	-96 requirement	Section 4.2.3, 1st sentence – deleted "and IAEA Safety Standard Series ST-1"; 5th sentence – revised leak rates Section 4.2.3.2, 2nd sentence – revised leak rate
	Editorial	Section 4.2.3 – revised throughout & capitalized O-ring in 3 places Section 4.2.3.1, 1st paragraph, 1st sentence – revised throughout & capitalized O-ring(s) in 3 places Section 4.2.3.2 – capitalized O-ring(s) in 2 places
Page 4.2-8	-96 requirement	1st paragraph – added "volumetric" & revised leak rate
Page 4.2-9	Editorial	1st paragraph, next-to-last sentence – added "minimum" and deleted "as recommended by ANSI N14.5-1997" Section 4.2.3.3, 1st paragraph, 3rd sentence – deleted "to account for a test pressure difference of less than 1 atmosphere"
	-96 requirement	Section 4.2.3.3 – deleted last paragraph
Page 4.2-11, Table 4.2-2	-96 requirement	Revised table throughout
Page 4.2-12, Table 4.2-3	-96 requirement	Revised table & note throughout
	Editorial	4th column header – changed "Volumetric" to "Allowable"
Page 4.2-13, Table 4.2-5	-96 requirement	Revised table throughout
	Editorial	Removed hyphen from nonmetallic in table title

Chapter/Page/ Figure/Table	Source of Change: Amendment No./ DCR(L) No./ -96 Requirement/ Editorial	Description of Change
Page 4.2-13, Table 4.2-6	-96 requirement	Revised table throughout
Page 4.2-13, Table 4.2-7	-96 requirement	Revised table throughout
Page 4.2-14, Table 4.2-8	-96 requirement	Revised table throughout
Page 4.2-15, Table 4.2-8	-96 requirement	Revised table throughout
Page 4.2-16, Table 4.2-8	-96 requirement	Revised table throughout
Page 4.3-1	-96 requirement	Section 4.3, 2nd paragraph, 1st sentence – revised leak rate
	Editorial	Section 4.3, 1st paragraph, 6th sentence – revised throughout; last sentence – replaced non-metallic with Viton 1st paragraph – capitalized O-rings in 2 places 2nd paragraph, 1st sentence – capitalized O-ring(s) Section 4.3.1, 2nd sentence – changed "percent" to "%" in 3 places; last sentence – changed "intact, fuel" to "intact fuel"
Page 4.3-2	Editorial	Section 4.3.2 – capitalized O-ring(s) in 2 placed
	-96 requirement	Section 4.3.2, 4th sentence – revised leak rate; last sentence – revised throughout
Page 4.3-3	Editorial	2nd paragraph – capitalized O-rings 3rd paragraph, last sentence – capitalized O-rings Section 4.3.4 , 2nd sentence – deleted "and the transportable storage canister are" & inserted "is"& capitalized O-rings; 3rd sentence – capitalized O-ring & changed "required for" to "allowed under"; last sentence – capitalized O-ring in 2 places and removed hyphen from nonmetallic
Page 4.3-4, Table 4.3-1	-96 requirement	Revised table throughout
	Editorial	Removed hyphen from nonmetallic in table title
Page 4.3-4, Table 4.3-2	-96 requirement	Revised table throughout; 4th column header – changed "Volumetric" to "Allowable"
Page 4.3-4, Table 4.3-3	-96 requirement	Revised table throughout
Page 4.4-1	-96 requirement	Section 4.4 – revised throughout
Chapter 5		
Page 5-1	-96 requirement	Section 5.0, last paragraph, 1st sentence – deleted "for shielding"
Page 5.1-1	-96 requirement	Section 5.1.1, 1st sentence – deleted "and IAEA Safety Standard Series No. ST-1"; last sentence – deleted "and IAEA Safety Standard Series No. ST-1 paragraph 656"
Page 5.1-6	-96 requirement	Section 5.1.4, 1st sentence – deleted "and paragraph 572 of IAEA Safety Standard Series No. ST-1" & "and paragraph 656 of IAEA Safety Standard Series No. ST-1"; last sentence – deleted "and IAEA Safety Standard Series No. ST-1"

Chapter/Page/ Figure/Table	Source of Change: Amendment No./ DCR(L) No./ -96 Requirement/ Editorial	Description of Change
Page 5.1-8	-96 requirement	Section 5.1.4.2, 2nd paragraph, next to last line – changed "20" to "21"
Chapter 6		
Page 6.1-1	-96 requirement	Section 6.1, 3rd paragraph, 1st sentence – deleted "and IAEA Safety Series ST-1 [2]"; 2nd sentence – changed "is assigned a nuclear criticality control transport index of 0" to "is assigned a Criticality Safety Index (CSI) of 0"
	Editorial	Section 6.1, 3rd paragraph, 2nd sentence – corrected "(N = 0)" to "(N = ∞)"
Page 6.4-1	Editorial	Section 6.4, 2nd paragraph, 2nd sentence – changed "A criticality transport index" to "A criticality safety index"; 3rd sentence – deleted "transport"
	-96 requirement	Section 6.4, 4th paragraph, 2nd sentence – changed "and a criticality transport index of 0" to "and a CSI of 0"
Page 6.4-2	-96 requirement	1st paragraph, 2nd sentence – changed "thereby resulting in a criticality transport index of 0" to "thereby resulting in a CSI of 0"
Page 6.6-1	Editorial	Reference 1 – deleted date Reference 2 – not used
Chapter 7		
Page 7-1	Editorial	Section 7.0, 5th paragraph – deleted 2nd & 3rd sentences; last sentence – deleted "including signoffs" & "and that records ... paragraphs 209 and 210"
Page 7-2	Editorial	1st full paragraph – capitalized O-ring(s) in 9 places; 4th sentence – deleted "the non-metallic"; last sentence – deleted 2nd paragraph – capitalized O-rings in 4 places & removed hyphen from nonmetallic
Page 7.1-1	-96 requirement	Section 7.1, last line – changed "IAEA Safety Series No. ST-1" to "IAEA TS-R-1"
Page 7.1-5	Editorial	Item 13, 1st sentence – revised throughout Section 7.1.3, 1st, 2nd & 3rd sentences – revised throughout Section 7.1.3.1, 1st paragraph – capitalized O-ring(s) in 9 places
Page 7.1-6	Editorial	Item 4 – revised throughout; capitalized O-ring(s) in 10 places
Page 7.1-7	Editorial	Item 16, 1st sentence – deleted "(absolute)"; 2nd sentence – deleted "(absolute)"; reversed Items 17 & 18; revised new Item 18 & capitalized O-rings in 2 places; Item 19 – revised throughout; separated into Items 19a, 19b & 19c

Chapter/Page/ Figure/Table	Source of Change: Amendment No./ DCR(L) No./ -96 Requirement/ Editorial	Description of Change
Page 7.1-8	-96 requirement	Item 19c – revised leak rate New Item 21c – revised leak rate Footnote, 2nd sentence – revised leak rate
	Editorial	Item 19a – revised throughout; capitalized O-rings in 3 places Item 19b – revised throughout; capitalized O-ring(s) in 2 places Item 19c – revised throughout; capitalized O-rings Item 20 – capitalized O-ring Old Item 21 – deleted; subsequent items renumbered New Item 21 – revised throughout; separated into Items 21a, 21b & 21c Item 21a – revised throughout; capitalized O-rings in 3 places Item 21b – revised throughout; capitalized O-ring(s) in 2 places Item 21c – revised throughout; capitalized O-rings New Item 22 – capitalized O-ring Footnote – revised throughout; capitalized O-ring(s) in 5 places
7.1-9	Editorial	New Item 26 – revised throughout; capitalized O-ring(s) in 2 places New Item 28 – revised throughout; capitalized O-ring in 6 places Added new Item 29 Item 31, 3rd sentence – revised throughout Item 33, 1st sentence – delete "O-ring"; 3rd sentence -- added "during the test period" Item 34, 2nd sentence – added "metallic" & capitalized O-ring Item 35, last sentence – deleted "in the cask loading report" Item 36, last sentence – changed "loading procedure and checklist are" to "loading documentation has been"
Page 7.1-10	Editorial	Item 2 – changed "trunnion" to "trunnons" Item 4 – added Note Item 5 – revised throughout
Page 7.1-11	Editorial	Item 15 – capitalized O-ring(s) in 6 places Item 20 – revised throughout Item 22 – capitalized O-ring(s) in 3 places Item 23, 1st sentence – capitalized O-rings; deleted 2nd sentence; last sentence revised throughout Item 24 – capitalized O-ring Item 25, 1st sentence – deleted "vacuum pump"; 2nd sentence – changed "3 mbar" to "<1 mbar"; last sentence revised throughout Item 26 – capitalized O-ring
Page 7.1-12	Editorial	Item 28 – capitalized O-ring in 3 places Item 30, 3rd sentence – added "during the 10-minute test period" Item 31, 1st sentence – capitalized O-rings Item 32, 1st sentence – capitalized O-ring in 3 places; 3rd sentence – revised throughout Item 33, 1st sentence – added "metallic" & capitalized O-ring

Chapter/Page/ Figure/Table	Source of Change: Amendment No./ DCR(L) No./ -96 Requirement/ Editorial	Description of Change
Page 7.2-1	Editorial	Section 7.2, 3rd sentence – added "of directly loaded fuel"; last sentence – revised throughout & capitalized O-ring(s) in 2 places Section 7.2.1, Item 3 – deleted last sentence Item 5 Note – revised throughout
Page 7.2-2	Editorial	Old Item 7 – deleted; subsequent items renumbered Added new Item 10 & new Item 11 (deleted old Item 11) Item 12 – revised throughout Added new Item 13 Section 7.2.2, 1st paragraph, last sentence – deleted "in accordance with Section 7.2.1" 2nd paragraph, 1st sentence – changed "the cask" to "a directly loaded cask"
Page 7.2-3	Editorial	Item 2, 1st sentence – added "and remove the interlid pressure port cover" Item 4 – deleted "at the station" Item 8, 3rd sentence – capitalized O-ring in 2 places Item 10, 2nd sentence – capitalized O-rings and deleted "absolute"; last sentence – deleted "(1 atmosphere) (absolute)" Item 11 – capitalized O-ring
Page 7.2-4	Editorial	Item 13, last sentence – changed "3 mbar" to "<1 mbar" & deleted "(absolute) is reached" Item 15 – capitalized "O-ring" Item 16 – capitalized O-ring in 2 places Item 18, 1st sentence – revised throughout & capitalized O-ring(s) in 2 places Item 19 – revised throughout Item 20 – added "and leak test equipment" Item 21 – capitalized "O-rings Item 22 – revised throughout Item 23 – added "Using the lift yoke"
Page 7.2-5	Editorial	Item 24 – deleted last sentence Old Item 28 – deleted; subsequent items renumbered New Item 29 – revised throughout Added new Items 30, 31, 32 & 33
Page 7.3-1	Editorial	Section 7.3.1, Item 3 – revised throughout Item 7, 3rd sentence – deleted "pillow blocks attached to the"
Page 7.3-2	Editorial	Section 7.3.2.1, Item 4, 2nd sentence – added "storage or"
	DCR(L) 423-SAR-15B & Editorial	Section 7.3.2.1, Item 5 – revised throughout
Page 7.3-3	Editorial	Item 11, 1st sentence – changed "clear" to "clean" Item 15, 1st sentence – capitalized O-ring(s) in 2 places Section 7.3.2.2, Item 1, last sentence – changed "vent/drain line" to "vent line" Item 3, 3rd sentence – capitalized O-ring in 2 places; added new last sentence

Chapter/Page/ Figure/Table	Source of Change: Amendment No./ DCR(L) No./ -96 Requirement/ Editorial	Description of Change
Page 7.3-4	Editorial	Item 5, 1st sentence – deleted "but 10, approximately equally spaced"; deleted old 2nd sentence Old Items 6 & 7 – deleted; subsequent items renumbered New Item 6 – added new last sentence New Item 7, 1st sentence – capitalized O-ring(s) in 2 places New Item 9 – revised throughout New Item 10 – added "and remove the handling slings" Section 7.3.3, 2nd sentence – changed "fuel or canister" to "directly loaded fuel or canisters" Section 7.3.3.1, Item 1, last sentence – added "or the inner lid alignment pins" Item 4 – added new Note
Page 7.3-5	Editorial	Reversed Items 7 & 8; new item 7 – deleted last sentence Item 14 – added new 2nd sentence
Page 7.3-6	Editorial	Section 7.3.3.2, Item 4 – added new Note Item 6 – added new Note
Page 7.3-7	Editorial	Item 11 – added "and disconnect the hydraulic operating system" Section 7.3.4, Item 3, last sentence – deleted "to the value specified in Table 7-1"
Page 7.3-9, Figure 7.3-1	DCR(L) 423-SAR-15B	Inserted new figure titled Cask Cooldown Piping and Controls Schematic
Page 7.4-1	Editorial	Section 7.4, 1st paragraph, 1st sentence – capitalized O-ring"; 3rd sentence – capitalized O-rings; 4th sentence – changed "test sensitivity" to "minimum sensitivity" 2nd paragraph – capitalized O-ring(s) in 8 places 3rd paragraph, 1st sentence – capitalized O'rings; old 2nd sentence – made into 2 sentences, revised & capitalized O-rings; deleted old 3rd sentence; last sentence – capitalized O-rings Section 7.4.1, 1st partial paragraph – revised throughout
Page 7.4-2	-96 requirement	1st line – revised leak rate
	Editorial	1st full paragraph, 1st sentence – added "performed" Section 7.4.2, 1st paragraph – revised throughout & capitalized O-ring(s) in 3 places 2nd paragraph – revised throughout & capitalized O-ring(s) in 5 places
Page 7.4-3	Editorial	1st partial paragraph, 1st full sentence – added "(evacuated envelope)"; 1st full paragraph – capitalized "O-rings" in 3 places Section 7.4.3 – revised throughout & capitalized O-ring(s) in 13 places; split paragraph into two
	-96 requirement	Section 7.4.3, 9th sentence – revised leak rate in 2 places

Chapter/Page/ Figure/Table	Source of Change: Amendment No./ DCR(L) No./ -96 Requirement/ Editorial	Description of Change
Page 7.4-4	Editorial	1st paragraph – revised throughout 2nd paragraph, 1st sentence – revised throughout & capitalized O-rings; 2nd sentence – added "a minimum of"; capitalized O-rings in 2 other places Section 7.4.4, 1st paragraph – revised throughout & capitalized O-ring in 4 places 2nd paragraph, 1st sentence – revised throughout & capitalized O-ring in 2 places; 3rd sentence – capitalized O-ring 3rd paragraph, 1st sentence – added "and shields"; deleted 2nd sentence
Page 7.6-2	Editorial	Item 9, 2nd sentence – added "and held for 10 minutes" Item 19 – revised throughout
Page 7.6-3	Editorial	Section 7.6.2, 1st paragraph, next-to-last sentence – changed "or waste containers" to "or GTCC waste" Item 1 – revised completely
Chapter 8		
Page 8-1	Editorial	Section 8.0, 1st paragraph, 1st sentence – changed "IAEA Safety Series No. 6" to "IAEA Safety Series No. TS-R-1"; 2nd paragraph – changed "IAEA Safety Series No. ST-1" to "IAEA Safety Series No. TS-R-1"
Page 8.1-6	Editorial	Section 8.1.3, 1st paragraph – capitalized O-rings in 3 places; 2nd paragraph, 1st sentence – revised throughout
Page 8.1-7	Editorial	1st full paragraph, 1st sentence – added "closures"; capitalized O-ring(s) in 7 places Metallic O-Ring Testing, 1st paragraph – capitalized O-rings; 2nd paragraph – revised throughout & capitalized O-ring(s) in 3 places; deleted 4th paragraph
Page 8.1-8	-96 requirement	Viton O-Ring Testing, 2nd paragraph, 2nd sentence – revised leak rate; last sentence – revised leak rate 3rd paragraph, 1st sentence – revised leak rate
	Editorial	Viton O-Ring Testing, 1st paragraph – capitalized O-rings in 2 places; revised minimum sensitivity rate; 2nd paragraph – capitalized O-ring(s) in 3 places; 3rd paragraph, 1st sentence – revised throughout; deleted 4th paragraph
Page 8.1-17	Editorial	Section 8.1.7, 2nd paragraph, 1st sentence – added "Inc."; 5th sentence – revised throughout 3rd paragraph – revised throughout
Page 8.1-18	Editorial	Section 8.1.7.2, 1st paragraph – added new 3rd sentence Section 8.1.7.3 – changed section title; 1st paragraph, 1st sentence – changed "neutron absorption" to "neutron transmission"; 2nd paragraph, 2nd sentence – changed "know" to "known"; deleted 3rd sentence

Chapter/Page/ Figure/Table	Source of Change: Amendment No./ DCR(L) No./ -96 Requirement/ Editorial	Description of Change
Page 8.1-19	Editorial	Section 8.1.7.4 – revised throughout for clarity Section 8.1.8, 1st paragraph, 1st sentence – changed "fabricated in two sections" to "fabricated by welding "; 2nd sentence – revised throughout; 2nd paragraph – deleted 2nd sentence and part of 3rd sentence. Revised new 2nd sentence to read "The canister serves ....; 3rd paragraph, last sentence – added "and Section III, Subsection NB, NB-4424 and NB-4427"
Page 8.1-20	Editorial	1st full paragraph, last sentence – changed "Appendix IV, using a leak rate test sensitivity" to "Appendix V, using a minimum leak rate test sensitivity"
Page 8.2-2	Editorital	Section 8.2.2.2, 1st paragraph – capitalized O-rings in 3 places Section 8.2.2.3, 1st sentence – deleted "maximum (total) permissible" & "all" & capitalized O-rings
Page 8.2-3	-96 requirement	1st paragraph, 2nd sentence – revised leak rate; 3rd sentence – revised leak rate
	Editorial	1st paragraph – capitalized O-rings in 3 places Section 8.2.4, 4th paragraph – capitalized O-rings in 4 places; last sentence – changed "inspection" to "inspections"
Page 8.2-8, Table 8.2-1	Editorial	6th row of table under "Frequency" header – moved lines down one space to align with proper tasks; 12th row of table under "Frequency" header – revised throughout; capitalized O-ring(s) in 7 places throughout table

Attachment 2

List of Drawing Changes

for

NAC-STC Transport Amendment
Revision STC-05A

NAC International

June 2005

Drawing 423-800, Revision 14 – Cask Assembly – NAC-STC Cask

423-800-9A

- Delete Delta note 9 on Detail D-D, Sheet 2, Zone A5. Add Delta note 11 to Section E-E, Item 11 balloon callout Sheet 2, Zone A2.
- Revise BOM Item 12, Description: **IS)** Parker 4P5ON; **WAS)** Parker 4P5N.

423-800-9B

- Revise Item 18 Description was Snaptite SVHN8-8EM, is "Snaptite SVHN8-8EMV".
- B.O.M, Item 9: Revise Spec.: **IS)** COML; **WAS)** ASTM A249.

423-800-10A

- Change Delta Note 6 to read, "Chrome plate the threaded portion of the component, at a minimum."
- Remove delta note 6 symbol from sheet 2 zone B6 above Item 22.

423-800-11A

- Revise Item 11 Description: **IS)** "Circle Seal No.524T-4M-10 or 524T1-4M-10."; **WAS)** Circle Seal No.524T-4M-10.

423-800-11B

- B.O.M: Add Item 27, Name: Lid Bolt Washer, Material: 304 St. Stl., Spec: ASTM A240, Description: 8mm Plate.
- Add Item 27 Detail.
- Add Delta note to Item 27: "Item 27 (Lid Bolt Washer) to be used at the two (2) slotted hole locations in the Inner Lid.

423-800-12A

- Add Delta note to Item 22 balloon callout Sheet 2, Zone A6, "Lubricate with Never-Seez or equal and tighten 2¼ turns after handtight."
- Remove Delta note 5 from Item 22 balloon callout Sheet 2, Zone B6.

423-800-13A

- Delete BOM item 27, and part detail on sheet 2.
- Delete Delta note 12.

Drawing 423-802, Revision 20 – Cask Body – NAC-STC Cask

423-802-15A

- Revise Delta Note 14: **IS)** 86.70 + .35/-.18 for remainder of Length; **WAS)** 86.70 + .25/-.00 for remainder of Length.
- Revise Item 29 Spec: **IS)** ASTM A511; **WAS)** ASTM A249.
- Add text "16X Ø1.03 X 2.5 deep" to Item 27 (Screw Thread Insert) callout Sheet 2, Zone B2 above text "16X 1-8UNC-2B X 2.0".
- Add Detail R-R (Alternate Fabrication) per attached sketch.
- Add Section Y-Y (Alternate Fabrication) per attached sketch.
- Sheet 2, Zone C8: Revise weld to be full penetration V-groove from arrow side.
- Sheet 4, Zone C1: Revise Counterbore callout: **IS)** .50; **WAS)** .45.
- Revise dimension on Sheet 3, Zone D1: **IS)** 81.44+.09/-.02; **WAS)** 81.46/81.42.
- Revise dimension on Sheet 3, Zone D7: **IS)** 71.00±.13; **WAS)** 71.00+.06/-.04.
- Remove geometric tolerance box from Sheet 3, Zone E7.
- Revise BOM Item 32 (Screw Thread Insert) quantity: **IS)** 6; **WAS)** 9.
- Revise balloon callout Sheet 5, Zone A4: **IS)** 28; **WAS)** 9.
- Add text "2X " to the thread callout Sheet 5, Zone A3.

423-802-16A

- Change diameter dimension, sheet 1, zone E8: **IS)** Ø.1; **WAS)** Ø.06.
- Change diameter dimension, sheet 6, zone E8: **IS)** Ø.1; **WAS)** Ø.06.
- Change Note 1: **IS)** Deleted; **WAS)** (Intentionally left blank)
- Update drawing graphics for item 25 in Sections L-L, V-V, T-T and Detail B-B to show the expansion foam (item 25) bending around the corner, rather than stopping flush at the edge. (Similar to the graphics in Detail R-R).

423-802-17A

- Revise the tolerance for the overall inside diameter of the Cask Body, Sheet 3 of 7, Zone D7: **IS)** Ø71.00+.14/-.14; **WAS)** Ø71.00+.13/-.13.

423-802-18A

- Revise hole diameter sheet 6, zone E8: **IS)** Ø.04-Ø.27 Thru; **WAS)** Ø.1 Thru.

423-802-19A

- Revise Delta Note 14: **IS)** 86.70 + .25/-.00 for remainder of Length; **WAS)** 86.70 + .35/-.18 for remainder of Length.

Drawing 423-803, Revision 8 – Lid Assembly – Inner, NAC-STC Cask

423-803-4A

- Revise Item 14 Description: **IS)** "Parker #6-1/4 F5OG"; **WAS)** Parker #6-1/4 F5G.
- Revise Item 13 Description: **IS)** "Parker #16-P5ON"; **WAS)** Parker #16-P5N.
- Revise Item 3 Description: **IS)** "Snaptite SVHN16-16EMV"; **WAS)** Snaptite SVHN 16-16EM.

423-803-5A

- Revise note 2: **IS)** "Commercial Grade-Flash Chrome of these fittings for anti galling"; **WAS)** Chrome plate .0002/.0005 thick Per QQ-C-320.

423-803-6A

- Change Delta Note 2 to read, "Chrome plate the threaded portion of the component, at a minimum."

423-803-7A

- Revise Delta Note 12: **IS)** Steel Stamp/Engrave Characters as shown…; **WAS)** Engrave Characters as shown…
- Revise detail E-E to show all lettering as .3 high.

Drawing 423-804, Revision 8 – Details – Inner Lid, NAC-STC Cask

423-804-3A

- Change hole diameter dimension, sheet 2, zone B2: **IS)** ∅.1; **WAS)** ∅.06.

423-804-4A

- Revise threaded hole callout Sheet 1, Zone C5: **IS)**: 4X 1 ¼-7 UNC-2B X 2.50 deep; **WAS)** 4X 1-8UNC-2B 2.00 deep.
- Revise balloon callout Sheet 1, Zone C5: **IS)** 10; **WAS)** 6.
- Add Item 10: Qty Assy –99, -98: 4, Name: Screw Thread Insert, Material: St. Stl., Spec.: Coml, Description: Helicoil #1185-20CN X 2.500.
- Revise diameter callout Sheet 1, Zone D6: **IS)** ∅70.1; **WAS)** ∅70.41.
- Item 6, Revise Quantity for assemblies –98 and –99: **IS)** 4; **WAS)** 8.

Drawing 423-804, Revision 8 – Details – Inner Lid, NAC-STC Cask (cont'd)

423-804-5A

- Change the chamfer on sheet 1, zone F3: **IS)** 35°; **WAS)** 30°.

423-804-6A

- Revise Item 10 description: **IS)** "Heilicoil, #1185-20CN x 1.875"; **WAS)** Heilicoil, #1185-20CN x 2.500..
- Revise Hole designation at Zone C6 (Balloon 10): **IS**"4X 1¼-7 UNC-2B X 1.88"; **WAS** 4X 1¼-7 UNC-2B x 2.50.

423-804-7A

- Revise BOM Item #10 description: **IS)** Heilicoil, #1185-20CN x 2.500; **WAS)** Heilicoil, #1185-20CN x 1.875
- Revise Hole designation at Zone C6 (Balloon 10): **IS)** 4X 1¼-7 UNC-2B X 2.50; **WAS)** 4X 1¼-7 UNC-2B x 1.88

Drawing 423-805, Revision 6 – Lid Assembly – Outer, NAC-STC Cask

423-805-4A

- Add text "16X ∅1.03 X 2.50 deep" to Item 4 (Screw Thread Insert) callout Sheet 1, Zone B6 above text "16X 1-8UNC-2B X 2.00".
- Update graphics accordingly throughout the drawing.

423-805-4B

- Add Delta Note: "At the option of the fabricator, Item 6 (Nameplate) may be attached using a minimum of four (4) stainless steel screws. The screws shall be 3 mm to 5 mm in diameter. The screw hole shall be no deeper than 15 mm. Screws shall be tack welded to Item 6 at installation. Both screw and tack weld are to be flush with the surface of Item 6 (nameplate).
- Add Item 8 to the Bill of Material. Name: Screw. Material: 304 St. Stl. Spec: Commercial.
- Add delta callout for new delta note next to the seal weld callout, Sheet 1, Zone E8.

423-805-5A

- Revise delta Note 5: **IS)** Steel Stamp/Engrave Delta 1.5 per side...; **WAS)** Engrave Delta 1.5 per side...
- Sheet 1, Zone B5: **IS)** 16X Dia 1.03 x 2.5 Deep; **WAS)** 16X Dia 1.03 x 2.50 Deep.

Drawing 423-806, Revision 7 – Port Coverplate Assy – Inner Lid, NAC-STC Cask

423-806-4A

- Change finish notes, zones F7 and D7: **ARE)** 2.0 Diameter; **WERE)** 3.0 IN Diameter.
- Delete reference dimensions of "(.32)" in zones B7 and D7.

423-806-5A

- Change Delta Note 2 to read, "Chrome plate the threaded portion of the component, at a minimum."

423-806-6A

- Revise Dimension in zone E4: **IS)** .3; **WAS)** .25.

Drawing 423-807, Revision 3 – Assembly, Port Cover, NAC-STC Cask

423-807-1A

- Change description BOM Item 9: **IS)** Parker 3-904V0835-75; **WAS)** Parker 3-904V747-75.
- Revise note 4 to read: **IS)** Steel Stamp/Engrave Letters...; **WAS)** Steel Stamp Letters...
- Change spelling in notes 6, 8 and 9: **IS)** Seez; **WAS)** Seeze.
- Revise Detail reference in zone A8: **IS)** B-B; **WAS)** A-A.
- Revise Detail reference, zone E5: **IS)** B-B; **WAS)** A-A.
- Add note 11: "Material Specification may be ASME SA705, Type 630 or ASME SA564".
- B.O.M: Revise the Spec. for Items 1 and 2: **IS)** See note 11; **WAS)** ASME SA705, Type 630.
- B.O.M: Revise the Description for items 1 and 2: **IS)** Bar/Forging; **WAS)** Ø4 ½ BAR.

423-807-1B

- Revise Delta note 4 to read: "Steel Stamp/Engrave letters ¼ high approx. as shown."

423-807-2A

- Add new detail of Item 1 (Assy –99 Configuration) per attached sketch.
- Remove the .06 X 45° chamfer at the bottom of the Ø2.70 section.
- Revise dimension, sheet 2, zone E8: **IS)** Ø4.5, **WAS)** Ø4.50.
- Revise Item 8 Material: **IS** "304 or 316 St. Stl."; **WAS** 304 St. Stl.

423-807-2B

- Change Delta Note 7 to read, "Chrome plate the threaded portion of the component, at a minimum."

Drawing 423-811, Revision 11 – Details – NAC-STC

423-811-5A

- Assy 98, Item 16, Sheet 2, Zone B3: Add callout for radius of corner on Drain Boss Flange, "R .50 TYP".
- Assy 98, Item 16, Sheet 2: Change length dimension: **IS** 6.93; **WAS** 6.98.
- Assy 98, Item 16, Sheet 2: Change width dimension: **IS** 2.95; **WAS** 2.98.

423-811-6A

- Revise diameter callout for Item 17 (Boss) on Sheet 2, Zone E1: **IS**: ∅1.25 Countersink 2.19 Deep; **WAS**: ∅2.51 Countersink 2.19 Deep.

423-811-7A

- Revise Assembly 98 (Drain Boss) per attached sketch. Update graphics accordingly throughout the drawing.
- Revise weld callout Sheet 2, Zone D4 for Item 17 to Item 16 to be 3/8 effective throat bevel ground flush on both sides.

423-811-8A

- Change Delta Note 2 to read, "Chrome plate the threaded portion of the component, at a minimum."

423-811-9A

- Revise the Inner Lid Guide Pin details (items 5 and 6).

423-811-10A

- Revise the Inner Lid Guide Pin details (items 5 and 6). This change includes an additional taper from the threads to the first notch.
- Change BOM Item #10, delete "Bisco Prod. Inc." from the description.

Drawing 423-812, Revision 6, Nameplates – NAC-STC

423-812-2A

- Add an alternate configuration part detail for Item 1, Body Nameplate.
- Change BOM Item 1-4 spec, **IS)** ASTM A240/AISI; **WAS)** AISI.
- Change BOM Item 1-4 description: **IS)** 2mm-2.5mm sheet, 2B finish; **WAS)** 2mm sheet, 2B finish.

Drawing 423-812, Revision 6, Nameplates – NAC-STC (cont'd)

423-812-3A

- Provide alternate Item 1 detail.

423-812-4A

- Revise Item 1 detail.

423-812-5A

- Delete: Alternate Configuration, Item #1, Body Nameplate, Sheet 2 of 2.

Drawing 423-870, Revision 5, Fuel Basket Assembly, PWR, 26 Element, NAC-STC Cask

423-870-2A

- Change BOM item 5, Drawing No.: **IS)** See Note 5; **WAS)** 423-875-99.
- Add Note 5 to read: Either tube assembly 423-875-99 or 423-877-99 may be used.
- Change Item 4 name: **IS)** Heat Transfer Disk; **WAS)** Aluminum Fin.
- Update view of item 2 to agree with 423-372 Rev. 1.

423-870-3A

- Remove the geometric tolerance from the top of Fuel Basket Assembly in zone F6.
- Remove all around weld designation on 1/8 fillet in drawing zone C6. Add "Alternate Configuration (A) Weld Where Accessible" notation to the weld symbol.
- Add item 12 to BOM. Qty Assy 99) A/R Name) Safety Wire Post Material) 304 St. Stl. Spec) ASME SA240 Description) ½ Plate.
- Add item 13 to BOM. Qty Assy 99) A/R Name) Safety Wire Material) St. Stl. Spec) Coml Description) 1/32-1/16 Dia.
- Add Section Line and View A-A per attached sketch to show Alternate Configuration (B) and the detail of Item 12.
- Add the graphics per attached sketch for placement and welding of item 12 in 6 locations on the top weldment.
- Add the following delta note. "For Alternate Configuration (B), modify item 9, top nut, by drilling the .123 Dia. weep hole completely thru for safety wire (item 13) attachment to optional component, item 12." Also add the delta note symbol next to items 9 and 12 balloons and at BOM items 9 and 12.
- Add item 14 to BOM. Qty Assy 99) A/R Name) Nord-Lock Material) St. Stl. Spec) Coml Description) NL42SS.
- Update graphics and add appropriate balloons to show items 9 and 14 for "Alternate Configuration (C)".
- Add the following delta note. "For Alternate Configuration (C), modify the Top Nut (Item 9), reducing the length by .28 [7] from the largest threaded end to accommodate the assembly with Nord-Lock (item 12)." Add the delta note symbol next to items 9 and 14 balloons and at BOM items 9 and 14.

Drawing 423-870, Revision 5, Fuel Basket Assembly, PWR, 26 Element, NAC-STC Cask (cont'd)

423-870-4A

- Change BOM item 5, Drawing No.: **IS)** 423-875-99; **WAS)** See Note 5
- Delete Note 5

Drawing 423-871, Revision 5, Bottom Weldment, Fuel Basket, PWR, 26 Element, NAC-STC Cask

423-871-1A

- Area C-7, REMOVE ".25 TYP" and REPLACE with... "(.54 TYP)".
- Add Note 2 to read... "2. CENTER ITEM 3, SUPPORT, ON WEB BETWEEN OPENINGS."

423-871-1B

- Revise thread callout in Zone F6: **IS)** 6X 1 5/8-8 UN THRU; **WAS)** 6X 1.625-8UN THRU.
- Revise (.54 TYP) reference dimension added by DCR 423-871-1A to be (.52 TYP).
- B.O.M, Item 3: Revise Spec.: **IS)** ASME SA479/SA240; **WAS)** ASME SA479; Revise Description: **IS)** 1 Bar/Plate; **WAS)** 1 Bar.

423-871-2A

- Revise the overall diameter, Zone D8: **IS:** ∅70.75+.00/-.02; **WAS:** ∅70.86+.00/-.02.

423-871-3A

- Revise dimension in Zone D8: **IS:** ∅70.75 +.01/-.02; **WAS:** ∅70.75 +.00/-.02.

423-871-4A

- Zone D8, Dim: **IS)** 70.75 +.01/-.03; **WAS)** 70.75 +.01/-.02.

Drawing 423-873, Revision 2, Support Deak and Misc. Basket Details, PWR, 26 Element, NAC-STC Cask

423-873-1A

- Change Dimension zone F4: **IS:** (3.29); **WAS:** (3.27).
- Change Dimension zone B4: **IS:** 9.23; **WAS:** 9.234.
- Change Dimension zone C3: **IS:** 9.23; **WAS:** 9.234.
- Update drawing border to current.

Drawing 423-875, Revision 7, Tube, NAC-STC Cask

423-875-4A

- Add an additional, alternate fabrication Detail A-A, per CY-MPC Fuel Tube Drawings (414-881 & 414-882).

Drawing 423-875, Revision 7, Tube, NAC-STC Cask (cont'd)

423-875-4B

- Change BOM Item2 name: **IS)** Neutron Absorber; **WAS)** Boral or Talbor.
- Change BOM Item2 Material: **IS)** See Note 1; **WAS)** Al/Boron Carbide.
- Change the words "Boral or Talbor" located at the dimensions on sheet 1, zones E8 and C3 with the words "Neutron Absorber".
- Revise Note 1 to read: "Neutron Absorber sheets..."
- Change title for item 2, sheet 2: **IS)** Neutron Absorber; **WAS)** Boral or Talbor.
- Change alternate fabrication Detail A-A stitch weld: **IS)** 1-12; **WAS)** 1-6.

423-875-5A

- Change Dimension Sht 2 of 2, Zone E4: **IS)** 8.2; **WAS)** 8.20.

423-875-6A

- Change dimension Sht 1 of 2, Zone E8 & Sht 2 of 2, Zone E4: **IS)** 8.2 +.1/-.2; **WAS)** 8.2.

Drawing 423-900, Revision 6, Package Assembly Transportation, NAC-STC Cask

423-900-5A

- Revise delta note 3, remove "DOUBLE TWIST ... IN GROUPS OF TWO:"
- Add delta note 4 "DOUBLE TWIST SAFETY WIRE (.051 " DIA.) RETAINING RODS IN GROUPS OF TWO" and add callout (near balloon 10).
- Add delta note 5 "TORQUE TO HAND TIGHT", and add call out (near balloon 7)
- Add delta note 3 to B.O.M., item 10.
- Update BOM Item 6 & 10: **IS)** 1-8 UNC-2B; **WAS)** 1-8UNC.
- Delete weight table and add "maximum loaded weight 250,000".
- Add delta note 6 "Item 7 Guide Pin use is Optional" and call out near balloon 7.

Drawing 414-871, Revision 6, Details, Canister, CY-MPC

414-871-5A

- Revised Delta Note 5 for the maximum empty GTCC canister weight: **IS:** 47,079 lbs. **WAS:** 44,150 lbs.

- Update graphics for stamped information corresponding to Delta note 5 on structural lid, sheet two for item 5.

Drawing 414-872, Revision 6, Assembly, Transportable Storage Canister (TSC), CY-MPC

414-872-5A

- Change weld size callout on Sht 2 of 3, Zone F5: **IS)** (3/8); **WAS)** (1/2).
- Change weld size callout on Sht 2 of 3, Zone D5: **IS)** (3/4); **WAS)** (7/8).
- Remove the "flatness" symbol from the weld callout Zone F5, Sht 2 of 3.
- Add new note to read, "The final weld profile of the shield lid weld will typically "wash" up onto the ID surface of the shell. To ensure that the reinforcement does not interfere with the structural lid, the weld reinforcement shall not exceed .110" and the wash profile up onto the shell ID shall not exceed .220". The weld profile acceptance will be verified with a GO/NO GO gauge with dimensions equal to the worst-case dimensional configuration of the structural lid profile (tightest acceptable fit to the shell ID) noted in Detail D-D of Drawing 414-871."
- Add new note to read, "The structural lid and installed spacer ring can be field dressed in localized areas to eliminate interference with the canister shell during installation of the lid."
- Revise Delta Notes 9, 16 & 17 to remove "(ASTM/ASME A/SA 240, Type 304/304L)".

Drawing 414-889, Revision 7, Assembly, Transportable Storage Canister (TSC), GTCC, CY-MPC

414-889-6A

- Change weld size callout on Sht 2 of 3, Zone E5: **IS)** (3/8); **WAS)** (1/2).
- Change weld size callout on Sht 2 of 3, Zone C5: **IS)** (3/4); **WAS)** (7/8).
- Remove the "flatness" symbol from the weld callout Zone E5, Sht 2 of 3
- Add new note to read, "The final weld profile of the shield lid weld will typically "wash" up onto the ID surface of the shell. To ensure that the reinforcement does not interfere with the structural lid, the weld reinforcement shall not exceed .110" and the wash profile up onto the shell ID shall not exceed .220". The weld profile acceptance will be verified with a GO/NO GO gauge with dimensions equal to the worst-case dimensional configuration of the structural lid profile (tightest acceptable fit to the shell ID) noted in Detail D-D of Drawing 414-871."

Drawing 414-889, Revision 7, Assembly, Transportable Storage Canister (TSC), GTCC, CY-MPC (cont'd)

414-889-6A (cont'd)

- Add new note to read, "The structural lid and installed spacer ring can be field dressed in localized areas to eliminate interference with the canister shell during installation of the lid."
- Revise Delta Notes 6, 9 & 10 to remove "(ASTM/ASME A/SA 240, Type 304/304L)"
- Add new note to read, "Trim the Spacer Ring (item 8) to appropriate length by aligning it with the ID of the Canister Shell (item 1), just below the lip bevel, at the minimum ID after shield lid weld. Let the spacer ring float to fill the root gap between the Structural Lid (item 6) and the canister shell."
- Add new delta note to Weld symbol located at D5/6, "Weld not to exceed top surface of item 5 (Shield Lid Assembly)"
- Add new note to read, "Methods utilized for fit-up, alignment and/or shim installation during welding of the Shield and Structural lids may include the use of tack welds, clamping mechanisms, bars, or hydraulic tooling. NAC approved procedures shall be used for all fit-up/alignment processes."

Attachment 3

Disposition of the "-96" Designator Issues Affecting 10 CFR 71 Licensees NAC-STC Cask

No.	Issue	Affected 10 CFR 71 Section	Impact on "-96" Designator Application for NAC-STC
1	Changing Part 71 to use SI Units	None	No effect. NAC-STC SAR dual unit system remains as regulation permits.
2	Radionuclide exemption values	20, 88, App. A Table A-2	Not applicable to NAC-STC.
3	Revised A_1 and A_2 values	App. A Table A-1	Revision of SAR Chapter 4 (Containment) completed to incorporate the new A_1/A_2 values.
4	UF_6 package requirements	55	Not applicable to NAC-STC.
5	Criticality Safety Index (CSI)	4, 22, and 59	Revised SAR Chapters 1, 5 and 6 to properly define the Transport Index (TI) and to incorporate the CSI terminology and values.
6	Type C packages	None	Not adopted in 10 CFR 71.
7	Deep immersion test for packages containing greater than 10^5 A_2	61	Previously incorporated into the NAC-STC SAR Section 2.7.5.
8	Grandfathering provision	19	Not applicable to NAC-STC pending approval of this amendment.
9	Definitions	4	Not applicable to NAC-STC.
10	Crush test for packages: ≤1,000 lbs, density ≤ 62.4, contents >1,000 A_2	73	Not applicable to NAC-STC.
11	Fissile material transport by air	55	Not applicable to NAC-STC.
12	Special package authorization	41	Not applicable to NAC-STC.
13	Expansion of QA requirements to CoC holders - 10 CFR 71 Subpart H	0, 1, 6, 7, 8, 9, 91, 93, 100, 101, 137	QA commitments already in the NAC-STC SAR.
14	Adoption of ASME code	None	Not adopted in 10 CFR 71.
15	Change authority for dual purpose package	None	Not adopted in 10 CFR 71.
16	Fissile material exemptions and general license provision based on fissile mass limits and CSI	1, 10, 11, 18, 20, 22, 24, 39, 53, and 100	No fissile package mass limits are included in the NAC-STC CoC or SAR.

Attachment 3

Disposition of the "-96" Designator Issues Affecting 10 CFR 71 Licensees NAC-STC Cask (continued)

No.	Issue	Affected 10 CFR 71 Section	Impact on "-96" Designator Application for NAC-LWT
17	Eliminated double containment of Pu	63	NAC-STC SAR chapters revised where applicable to delete text referring to double containment components.
18	Contamination limits as applied to spent fuel and high-level waste packages	None	Not adopted in 10 CFR 71.
19	Event reporting	95	Adopted, but no effect on NAC-STC.

June 2005

Revision STC-05A

NAC-STC

NAC Storage Transport Cask

SAFETY ANALYSIS REPORT

Docket No. 71-9235

NAC INTERNATIONAL

Atlanta Corporate Headquarters: 3950 East Jones Bridge Road, Norcross, Georgia 30092 USA
Phone 770-447-1144, Fax 770-447-1797, www.nacintl.com

List of Effective Pages

List of Effective Pages

Master Table of Contents

i ..... Revision 15
ii ..... Revision 15
iii ..... Revision 15
iv ..... Revision 15
v ..... Revision 15
vi ..... Revision 15
vii ..... Revision 15
viii ..... Revision 15
ix ..... Revision 15
x ..... Revision 15
xi ..... Revision 15
xii ..... Revision 15
xiii ..... Revision 15
xiv ..... Revision 15
xv ..... Revision 15
xvi ..... Revision 15
xvii ..... Revision 15

Chapter 1

1-i ..... Revision 15
1-ii ..... Revision 15
1-iii ..... Revision STC-05A
1-iv ..... Revision STC-05A
1-v ..... Revision STC-05A
1-1 ..... Revision STC-05A
1-2 ..... Revision 15
1-3 ..... Revision 15
1-4 ..... Revision 15
1-5 ..... Revision 15
1-6 ..... Revision 15
1-7 ..... Revision STC-05A
1-8 ..... Revision 15
1-9 ..... Revision STC-05A
1-10 ..... Revision 15
1-11 ..... Revision 15
1.1-1 ..... Revision STC-05A
1.1-2 ..... Revision STC-05A
1.1-3 ..... Revision STC-05A
1.1-4 ..... Revision STC-05A
1.1-5 ..... Revision 15
1.1-6 ..... Revision 15
1.1-7 ..... Revision STC-05A
1.1-8 ..... Revision 15
1.2-1 ..... Revision 15
1.2-2 ..... Revision 15
1.2-3 ..... Revision 15
1.2-4 ..... Revision 15
1.2-5 ..... Revision STC-05A
1.2-6 ..... Revision STC-05A
1.2-7 ..... Revision 15
1.2-8 ..... Revision 15
1.2-9 ..... Revision STC-05A
1.2-10 ..... Revision 15
1.2-11 ..... Revision 15
1.2-12 ..... Revision 15
1.2-13 ..... Revision 15
1.2-14 ..... Revision 15
1.2-15 ..... Revision 15
1.2-16 ..... Revision 15
1.2-17 ..... Revision 15
1.2-18 ..... Revision 15
1.2-19 ..... Revision 15
1.2-20 ..... Revision 15
1.2-21 ..... Revision STC-05A
1.2-22 ..... Revision STC-05A
1.2-23 ..... Revision STC-05A
1.2-24 ..... Revision STC-05A

List of Effective Pages (continued)

1.2-25 ..... Revision STC-05A
1.2-26 ..... Revision 15
1.2-27 ..... Revision 15
1.2-28 ..... Revision 15
1.2-29 ..... Revision 15
1.2-30 ..... Revision 15
1.2-31 ..... Revision 15
1.2-32 ..... Revision 15
1.2-33 ..... Revision 15
1.2-34 ..... Revision 15
1.2-35 ..... Revision 15
1.2-36 ..... Revision 15
1.2-37 ..... Revision 15
1.2-38 ..... Revision 15
1.2-39 ..... Revision 15
1.2-40 ..... Revision 15
1.2-41 ..... Revision 15
1.2-42 ..... Revision STC-05A
1.2-43 ..... Revision 15
1.2-44 ..... Revision 15
1.3-1 ..... Revision 15

Chapter 2

2-i ..... Revision 15
2-ii ..... Revision 15
2-iii ..... Revision 15
2-iv ..... Revision 15
2-v ..... Revision 15
2-vi ..... Revision 15
2-vii ..... Revision 15
2-viii ..... Revision 15
2-ix ..... Revision 15
2-x ..... Revision 15
2-xi ..... Revision 15
2-xii ..... Revision 15
2-xiii ..... Revision 15
2-xiv ..... Revision 15
2-xv ..... Revision 15
2-xvi ..... Revision 15
2-xvii ..... Revision 15
2-xviii ..... Revision 15
2-xix ..... Revision 15
2-xx ..... Revision 15
2-xxi ..... Revision 15
2-xxii ..... Revision 15
2-xxiii ..... Revision 15
2-xxiv ..... Revision 15
2-xxv ..... Revision 15
2-xxvi ..... Revision 15
2-xxvii ..... Revision 15
2-xxviii ..... Revision 15
2-xxix ..... Revision 15
2-xxx ..... Revision 15
2-xxxi ..... Revision 15
2-xxxii ..... Revision 15
2-xxxiii ..... Revision 15
2-xxxiv ..... Revision 15
2-xxxv ..... Revision 15
2-xxxvi ..... Revision 15
2-xxxvii ..... Revision 15
2-xxxviii ..... Revision 15
2-xxxix ..... Revision 15
2-xl ..... Revision 15
2-xli ..... Revision 15
2-xlii ..... Revision 15
2-xliii ..... Revision 15
2-xliv ..... Revision 15
2-xlv ..... Revision 15
2-xlvi ..... Revision 15
2-xlvii ..... Revision 15

List of Effective Pages (continued)

2-xlviii ..... Revision 15
2-xlix ..... Revision 15
2-l ..... Revision STC-05A
2-li ..... Revision 15
2-lii ..... Revision 15
2-liii ..... Revision 15
2-liv ..... Revision 15
2-lv ..... Revision 15
2-lvi ..... Revision 15
2-lvii ..... Revision 15
2-lviii ..... Revision 15
2-1 ..... Revision STC-05A
2.1.1-1 ..... Revision 15
2.1.1-2 ..... Revision STC-05A
2.1.1-3 ..... Revision 15
2.1.1-4 ..... Revision STC-05A
2.1.2-1 ..... Revision 15
2.1.2-2 ..... Revision 15
2.1.2-3 ..... Revision 15
2.1.2-4 ..... Revision 15
2.1.2-5 ..... Revision 15
2.1.3-1 ..... Revision 15
2.1.3-2 ..... Revision 15
2.1.3-3 ..... Revision 15
2.1.3-4 ..... Revision 15
2.1.3-5 ..... Revision 15
2.1.3-6 ..... Revision 15
2.1.3-7 ..... Revision 15
2.1.3-8 ..... Revision 15
2.1.3-9 ..... Revision 15
2.1.3-10 ..... Revision 15
2.1.3-11 ..... Revision 15
2.1.3-12 ..... Revision 15
2.1.3-13 ..... Revision 15
2.1.3-14 ..... Revision 15
2.1.3-15 ..... Revision 15
2.2-1 ..... Revision 15
2.2-2 ..... Revision 15
2.2-3 ..... Revision 15
2.2-4 ..... Revision 15
2.2-5 ..... Revision 15
2.2-6 ..... Revision 15
2.2-7 ..... Revision 15
2.3.1-1 ..... Revision 15
2.3.1-2 ..... Revision 15
2.3.2-1 ..... Revision 15
2.3.2-2 ..... Revision 15
2.3.2-3 ..... Revision 15
2.3.2-4 ..... Revision 15
2.3.2-5 ..... Revision 15
2.3.3-1 ..... Revision 15
2.3.3-2 ..... Revision 15
2.3.4-1 ..... Revision 15
2.3.4-2 ..... Revision 15
2.3.4-3 ..... Revision 15
2.3.5-1 ..... Revision 15
2.3.5-2 ..... Revision 15
2.3.6-1 ..... Revision 15
2.3.6-2 ..... Revision 15
2.3.6-3 ..... Revision 15
2.3.6-4 ..... Revision 15
2.3.6-5 ..... Revision 15
2.3.7-1 ..... Revision 15
2.3.8-1 ..... Revision 15
2.4-1 ..... Revision 15
2.4.1-1 ..... Revision 15
2.4.2-1 ..... Revision 15
2.4.3-1 ..... Revision 15
2.4.4-1 ..... Revision 15
2.4.4-2 ..... Revision 15

List of Effective Pages (continued)

2.4.4-3 ..... Revision 15
2.4.4-4 ..... Revision 15
2.4.4-5 ..... Revision 15
2.4.4-6 ..... Revision 15
2.4.4-7 ..... Revision 15
2.4.4-8 ..... Revision 15
2.4.4-9 ..... Revision 15
2.4.4-10 ..... Revision 15
2.4.5-1 ..... Revision 15
2.4.6-1 ..... Revision 15
2.5.1-1 ..... Revision 15
2.5.1-2 ..... Revision 15
2.5.1-3 ..... Revision 15
2.5.1-4 ..... Revision 15
2.5.1-5 ..... Revision 15
2.5.1-6 ..... Revision 15
2.5.1-7 ..... Revision 15
2.5.1-8 ..... Revision 15
2.5.1-9 ..... Revision 15
2.5.1-10 ..... Revision 15
2.5.1-11 ..... Revision 15
2.5.1-12 ..... Revision 15
2.5.1-13 ..... Revision 15
2.5.1-14 ..... Revision 15
2.5.1-15 ..... Revision 15
2.5.1-16 ..... Revision 15
2.5.1-17 ..... Revision 15
2.5.1-18 ..... Revision 15
2.5.1-19 ..... Revision 15
2.5.1-20 ..... Revision 15
2.5.1-21 ..... Revision 15
2.5.1-22 ..... Revision 15
2.5.1-23 ..... Revision 15
2.5.1-24 ..... Revision 15
2.5.1-25 ..... Revision 15
2.5.1-26 ..... Revision 15
2.5.1-27 ..... Revision 15
2.5.1-28 ..... Revision STC-05A
2.5.1-29 ..... Revision 15
2.5.1-30 ..... Revision 15
2.5.1-31 ..... Revision 15
2.5.1-32 ..... Revision 15
2.5.1-33 ..... Revision 15
2.5.1-34 ..... Revision 15
2.5.1-35 ..... Revision 15
2.5.1-36 ..... Revision 15
2.5.2-1 ..... Revision 15
2.5.2-2 ..... Revision 15
2.5.2-3 ..... Revision 15
2.5.2-4 ..... Revision 15
2.5.2-5 ..... Revision 15
2.5.2-6 ..... Revision 15
2.5.2-7 ..... Revision 15
2.5.2-8 ..... Revision 15
2.5.2-9 ..... Revision 15
2.5.2-10 ..... Revision 15
2.5.2-11 ..... Revision 15
2.5.2-12 ..... Revision 15
2.5.2-13 ..... Revision 15
2.5.2-14 ..... Revision 15
2.5.2-15 ..... Revision 15
2.5.2-16 ..... Revision 15
2.5.2-17 ..... Revision 15
2.5.2-18 ..... Revision 15
2.5.2-19 ..... Revision 15
2.5.2-20 ..... Revision 15
2.5.2-21 ..... Revision 15
2.5.2-22 ..... Revision 15
2.5.2-23 ..... Revision 15
2.5.2-24 ..... Revision 15

List of Effective Pages (continued)

2.5.2-25 ..... Revision 15
2.5.2-26 ..... Revision 15
2.5.2-27 ..... Revision 15
2.5.2-28 ..... Revision 15
2.5.2-29 ..... Revision 15
2.6-1 ..... Revision 15
2.6-2 ..... Revision 15
2.6.1-1 ..... Revision 15
2.6.1-2 ..... Revision 15
2.6.1-3 ..... Revision 15
2.6.1-4 ..... Revision 15
2.6.1-5 ..... Revision 15
2.6.1-6 ..... Revision 15
2.6.1-7 ..... Revision 15
2.6.2-1 ..... Revision 15
2.6.2-2 ..... Revision 15
2.6.2-3 ..... Revision 15
2.6.2-4 ..... Revision 15
2.6.2-5 ..... Revision 15
2.6.2-6 ..... Revision 15
2.6.2-7 ..... Revision 15
2.6.2-8 ..... Revision 15
2.6.3-1 ..... Revision 15
2.6.4-1 ..... Revision 15
2.6.5-1 ..... Revision 15
2.6.5-2 ..... Revision 15
2.6.6-1 ..... Revision 15
2.6.7-1 ..... Revision 15
2.6.7.1-1 ..... Revision 15
2.6.7.1-2 ..... Revision 15
2.6.7.1-3 ..... Revision 15
2.6.7.1-4 ..... Revision 15
2.6.7.1-5 ..... Revision 15
2.6.7.1-6 ..... Revision 15
2.6.7.1-7 ..... Revision 15
2.6.7.1-8 ..... Revision 15
2.6.7.1-9 ..... Revision 15
2.6.7.1-10 ..... Revision 15
2.6.7.1-11 ..... Revision 15
2.6.7.1-12 ..... Revision 15
2.6.7.1-13 ..... Revision 15
2.6.7.1-14 ..... Revision 15
2.6.7.1-15 ..... Revision 15
2.6.7.1-16 ..... Revision 15
2.6.7.1-17 ..... Revision 15
2.6.7.2-1 ..... Revision 15
2.6.7.2-2 ..... Revision 15
2.6.7.2-3 ..... Revision 15
2.6.7.2-4 ..... Revision 15
2.6.7.2-5 ..... Revision 15
2.6.7.2-6 ..... Revision 15
2.6.7.2-7 ..... Revision 15
2.6.7.2-8 ..... Revision 15
2.6.7.2-9 ..... Revision 15
2.6.7.2-10 ..... Revision 15
2.6.7.2-11 ..... Revision 15
2.6.7.2-12 ..... Revision 15
2.6.7.2-13 ..... Revision 15
2.6.7.2-14 ..... Revision 15
2.6.7.2-15 ..... Revision 15
2.6.7.2-16 ..... Revision 15
2.6.7.2-17 ..... Revision 15
2.6.7.2-18 ..... Revision 15
2.6.7.2-19 ..... Revision 15
2.6.7.3-1 ..... Revision 15
2.6.7.3-2 ..... Revision 15
2.6.7.3-3 ..... Revision 15
2.6.7.3-4 ..... Revision 15
2.6.7.3-5 ..... Revision 15
2.6.7.3-6 ..... Revision 15

List of Effective Pages (continued)

2.6.7.3-7 ..... Revision 15
2.6.7.3-8 ..... Revision 15
2.6.7.3-9 ..... Revision 15
2.6.7.3-10 ..... Revision 15
2.6.7.3-11 ..... Revision 15
2.6.7.4-1 ..... Revision 15
2.6.7.4-2 ..... Revision 15
2.6.7.4-3 ..... Revision 15
2.6.7.4-4 ..... Revision 15
2.6.7.4-5 ..... Revision 15
2.6.7.4-6 ..... Revision 15
2.6.7.4-7 ..... Revision 15
2.6.7.4-8 ..... Revision 15
2.6.7.4-9 ..... Revision 15
2.6.7.4-10 ..... Revision 15
2.6.7.4-11 ..... Revision 15
2.6.7.4-12 ..... Revision 15
2.6.7.4-13 ..... Revision 15
2.6.7.4-14 ..... Revision 15
2.6.7.4-15 ..... Revision 15
2.6.7.4-16 ..... Revision 15
2.6.7.4-17 ..... Revision 15
2.6.7.4-18 ..... Revision 15
2.6.7.4-19 ..... Revision 15
2.6.7.4-20 ..... Revision 15
2.6.7.4-21 ..... Revision 15
2.6.7.4-22 ..... Revision 15
2.6.7.4-23 ..... Revision 15
2.6.7.4-24 ..... Revision 15
2.6.7.4-25 ..... Revision 15
2.6.7.4-26 ..... Revision 15
2.6.7.4-27 ..... Revision 15
2.6.7.4-28 ..... Revision 15
2.6.7.4-29 ..... Revision 15
2.6.7.4-30 ..... Revision 15
2.6.7.4-31 ..... Revision 15
2.6.7.4-32 ..... Revision 15
2.6.7.4-33 ..... Revision 15
2.6.7.4-34 ..... Revision 15
2.6.7.4-35 ..... Revision 15
2.6.7.4-36 ..... Revision 15
2.6.7.4-37 ..... Revision 15
2.6.7.4-38 ..... Revision 15
2.6.7.4-39 ..... Revision 15
2.6.7.4-40 ..... Revision 15
2.6.7.4-41 ..... Revision 15
2.6.7.4-42 ..... Revision 15
2.6.7.4-43 ..... Revision 15
2.6.7.4-44 ..... Revision 15
2.6.7.4-45 ..... Revision 15
2.6.7.4-46 ..... Revision 15
2.6.7.4-47 ..... Revision 15
2.6.7.4-48 ..... Revision 15
2.6.7.4-49 ..... Revision 15
2.6.7.4-50 ..... Revision 15
2.6.7.4-51 ..... Revision 15
2.6.7.4-52 ..... Revision 15
2.6.7.4-53 ..... Revision 15
2.6.7.4-54 ..... Revision 15
2.6.7.4-55 ..... Revision 15
2.6.7.4-56 ..... Revision 15
2.6.7.4-57 ..... Revision 15
2.6.7.4-58 ..... Revision 15
2.6.7.4-59 ..... Revision 15
2.6.7.5-1 ..... Revision 15
2.6.7.5-2 ..... Revision 15
2.6.7.5-3 ..... Revision 15
2.6.7.5-4 ..... Revision 15
2.6.7.5-5 ..... Revision 15
2.6.7.5-6 ..... Revision 15

List of Effective Pages (continued)

2.6.7.5-7 ..... Revision 15
2.6.7.5-8 ..... Revision 15
2.6.7.5-9 ..... Revision 15
2.6.7.5-10 ..... Revision 15
2.6.7.5-11 ..... Revision 15
2.6.7.5-12 ..... Revision 15
2.6.7.5-13 ..... Revision 15
2.6.7.6-1 ..... Revision 15
2.6.7.6-2 ..... Revision 15
2.6.7.6-3 ..... Revision 15
2.6.7.6-4 ..... Revision 15
2.6.7.6-5 ..... Revision 15
2.6.7.6-6 ..... Revision 15
2.6.7.6-7 ..... Revision 15
2.6.7.6-8 ..... Revision 15
2.6.7.6-9 ..... Revision 15
2.6.7.6-10 ..... Revision 15
2.6.7.6-11 ..... Revision 15
2.6.7.6-12 ..... Revision 15
2.6.7.6-13 ..... Revision 15
2.6.7.7-1 ..... Revision 15
2.6.7.7-2 ..... Revision 15
2.6.7.7-3 ..... Revision 15
2.6.7.7-4 ..... Revision 15
2.6.7.7-5 ..... Revision 15
2.6.8-1 ..... Revision 15
2.6.9-1 ..... Revision 15
2.6.10-1 ..... Revision 15
2.6.10.1-1 ..... Revision 15
2.6.10.1-2 ..... Revision 15
2.6.10.2-1 ..... Revision 15
2.6.10.2-2 ..... Revision 15
2.6.10.2-3 ..... Revision 15
2.6.10.2-4 ..... Revision 15
2.6.10.3-1 ..... Revision 15
2.6.10.3-2 ..... Revision 15
2.6.10.3-3 ..... Revision 15
2.6.10.3-4 ..... Revision 15
2.6.10.3-5 ..... Revision 15
2.6.10.3-6 ..... Revision 15
2.6.10.3-7 ..... Revision 15
2.6.11-1 ..... Revision 15
2.6.11-2 ..... Revision 15
2.6.11.1-1 ..... Revision 15
2.6.11.1-2 ..... Revision 15
2.6.11.1-3 ..... Revision 15
2.6.11.1-4 ..... Revision 15
2.6.11.2-1 ..... Revision 15
2.6.11.2-2 ..... Revision 15
2.6.11.2-3 ..... Revision 15
2.6.11.2-4 ..... Revision 15
2.6.11.2-5 ..... Revision 15
2.6.11.2-6 ..... Revision 15
2.6.11.2-7 ..... Revision 15
2.6.11.2-8 ..... Revision 15
2.6.11.2-9 ..... Revision 15
2.6.11.2-10 ..... Revision 15
2.6.11.2-11 ..... Revision 15
2.6.11.2-12 ..... Revision 15
2.6.11.3-1 ..... Revision 15
2.6.12-1 ..... Revision 15
2.6.12-2 ..... Revision 15
2.6.12-3 ..... Revision 15
2.6.12-4 ..... Revision 15
2.6.12-5 ..... Revision 15
2.6.12.1-1 ..... Revision 15
2.6.12.2-1 ..... Revision 15
2.6.12.2-2 ..... Revision 15
2.6.12.2-3 ..... Revision 15
2.6.12.2-4 ..... Revision 15

List of Effective Pages (continued)

2.6.12.2-5 ..... Revision 15
2.6.12.2-6 ..... Revision 15
2.6.12.3-1 ..... Revision 15
2.6.12.3-2 ..... Revision 15
2.6.12.3-3 ..... Revision 15
2.6.12.3-4 ..... Revision 15
2.6.12.3-5 ..... Revision 15
2.6.12.3-6 ..... Revision 15
2.6.12.3-7 ..... Revision 15
2.6.12.4-1 ..... Revision 15
2.6.12.4-2 ..... Revision 15
2.6.12.4-3 ..... Revision 15
2.6.12.5-1 ..... Revision 15
2.6.12.5-2 ..... Revision 15
2.6.12.5-3 ..... Revision 15
2.6.12.6-1 ..... Revision 15
2.6.12.6-2 ..... Revision 15
2.6.12.7-1 ..... Revision 15
2.6.12.7-2 ..... Revision 15
2.6.12.7-3 ..... Revision 15
2.6.12.7-4 ..... Revision 15
2.6.12.7-5 ..... Revision 15
2.6.12.7-6 ..... Revision 15
2.6.12.7-7 ..... Revision 15
2.6.12.7-8 ..... Revision 15
2.6.12.7-9 ..... Revision 15
2.6.12.7-10 ..... Revision 15
2.6.12.7-11 ..... Revision 15
2.6.12.7-12 ..... Revision 15
2.6.12.7-13 ..... Revision 15
2.6.12.7-14 ..... Revision 15
2.6.12.7-15 ..... Revision 15
2.6.12.7-16 ..... Revision 15
2.6.12.7-17 ..... Revision 15
2.6.12.7-18 ..... Revision 15
2.6.12.7-19 ..... Revision 15
2.6.12.7-20 ..... Revision 15
2.6.12.7-21 ..... Revision 15
2.6.12.7-22 ..... Revision 15
2.6.12.8-1 ..... Revision 15
2.6.12.8-2 ..... Revision 15
2.6.12.9-1 ..... Revision 15
2.6.12.9-2 ..... Revision 15
2.6.12.9-3 ..... Revision 15
2.6.12.9-4 ..... Revision 15
2.6.12.9-5 ..... Revision 15
2.6.12.9-6 ..... Revision 15
2.6.12.9-7 ..... Revision 15
2.6.12.9-8 ..... Revision 15
2.6.12.9-9 ..... Revision 15
2.6.12.9-10 ..... Revision 15
2.6.12.9-11 ..... Revision 15
2.6.12.10-1 ..... Revision 15
2.6.12.11-1 ..... Revision 15
2.6.12.12-1 ..... Revision 15
2.6.12.13-1 ..... Revision 15
2.6.12.13-2 ..... Revision 15
2.6.12.13-3 ..... Revision 15
2.6.12.13-4 ..... Revision 15
2.6.13-1 ..... Revision 15
2.6.13-2 ..... Revision 15
2.6.13-3 ..... Revision 15
2.6.13.1-1 ..... Revision 15
2.6.13.1-2 ..... Revision 15
2.6.13.2-1 ..... Revision 15
2.6.13.2-2 ..... Revision 15
2.6.13.2-3 ..... Revision 15
2.6.13.2-4 ..... Revision 15
2.6.13.2-5 ..... Revision 15
2.6.13.2-6 ..... Revision 15

List of Effective Pages (continued)

2.6.13.2-7 ..... Revision 15
2.6.13.3-1 ..... Revision 15
2.6.13.3-2 ..... Revision 15
2.6.13.3-3 ..... Revision 15
2.6.13.3-4 ..... Revision 15
2.6.13.4-1 ..... Revision 15
2.6.13.4-2 ..... Revision 15
2.6.13.4-3 ..... Revision 15
2.6.13.4-4 ..... Revision 15
2.6.13.4-5 ..... Revision 15
2.6.13.5-1 ..... Revision 15
2.6.13.5-2 ..... Revision 15
2.6.13.6-1 ..... Revision 15
2.6.13.6-2 ..... Revision 15
2.6.13.7-1 ..... Revision 15
2.6.13.7-2 ..... Revision 15
2.6.13.8-1 ..... Revision 15
2.6.13.9-1 ..... Revision 15
2.6.13.10-1 ..... Revision 15
2.6.13.11-1 ..... Revision 15
2.6.13.11-2 ..... Revision 15
2.6.13.11-3 ..... Revision 15
2.6.13.12-1 ..... Revision 15
2.6.13.12-2 ..... Revision 15
2.6.14-1 ..... Revision 15
2.6.14-2 ..... Revision 15
2.6.14-3 ..... Revision 15
2.6.14-4 ..... Revision 15
2.6.14-5 ..... Revision 15
2.6.14-6 ..... Revision 15
2.6.14-7 ..... Revision 15
2.6.14-8 ..... Revision 15
2.6.14-9 ..... Revision 15
2.6.14-10 ..... Revision 15
2.6.14-11 ..... Revision 15
2.6.14-12 ..... Revision 15
2.6.14-13 ..... Revision 15
2.6.14-14 ..... Revision 15
2.6.14-15 ..... Revision 15
2.6.14-16 ..... Revision 15
2.6.14-17 ..... Revision 15
2.6.14-18 ..... Revision 15
2.6.14-19 ..... Revision 15
2.6.14-20 ..... Revision 15
2.6.14-21 ..... Revision 15
2.6.14-22 ..... Revision 15
2.6.14-23 ..... Revision 15
2.6.14-24 ..... Revision 15
2.6.14-25 ..... Revision 15
2.6.14-26 ..... Revision 15
2.6.14-27 ..... Revision 15
2.6.14-28 ..... Revision 15
2.6.14-29 ..... Revision 15
2.6.14-30 ..... Revision 15
2.6.14-31 ..... Revision 15
2.6.14-32 ..... Revision 15
2.6.14-33 ..... Revision 15
2.6.14-34 ..... Revision 15
2.6.14-35 ..... Revision 15
2.6.14-36 ..... Revision 15
2.6.14-37 ..... Revision 15
2.6.14-38 ..... Revision 15
2.6.14-39 ..... Revision 15
2.6.14-40 ..... Revision 15
2.6.14-41 ..... Revision 15
2.6.14-42 ..... Revision 15
2.6.14-43 ..... Revision 15
2.6.14-44 ..... Revision 15
2.6.14-45 ..... Revision 15
2.6.14-46 ..... Revision 15

List of Effective Pages (continued)

2.6.14-47 ..... Revision 15
2.6.14-48 ..... Revision 15
2.6.14-49 ..... Revision 15
2.6.14-50 ..... Revision 15
2.6.14-51 ..... Revision 15
2.6.14-52 ..... Revision 15
2.6.14-53 ..... Revision 15
2.6.14-54 ..... Revision 15
2.6.14-55 ..... Revision 15
2.6.14-56 ..... Revision 15
2.6.14-57 ..... Revision 15
2.6.14-58 ..... Revision 15
2.6.14-59 ..... Revision 15
2.6.14-60 ..... Revision 15
2.6.14-61 ..... Revision 15
2.6.14-62 ..... Revision 15
2.6.14-63 ..... Revision 15
2.6.14-64 ..... Revision 15
2.6.14-65 ..... Revision 15
2.6.14-66 ..... Revision 15
2.6.14-67 ..... Revision 15
2.6.14-68 ..... Revision 15
2.6.15-1 ..... Revision 15
2.6.15.1-1 ..... Revision 15
2.6.15.1-2 ..... Revision STC-05A
2.6.15.2-1 ..... Revision 15
2.6.15.2-2 ..... Revision 15
2.6.15.2-3 ..... Revision 15
2.6.15.2-4 ..... Revision 15
2.6.15.2-5 ..... Revision 15
2.6.15.2-6 ..... Revision 15
2.6.15.2-7 ..... Revision 15
2.6.15.3-1 ..... Revision 15
2.6.15.3-2 ..... Revision 15
2.6.15.3-3 ..... Revision STC-05A
2.6.15.3-4 ..... Revision STC-05A
2.6.15.4-1 ..... Revision STC-05A
2.6.15.4-2 ..... Revision STC-05A
2.6.15.4-3 ..... Revision STC-05A
2.6.15.4-4 ..... Revision STC-05A
2.6.15.4-5 ..... Revision 15
2.6.15.5-1 ..... Revision STC-05A
2.6.15.6-1 ..... Revision 15
2.6.15.6-2 ..... Revision STC-05A
2.6.15.6-3 ..... Revision STC-05A
2.6.15.7-1 ..... Revision STC-05A
2.6.15.8-1 ..... Revision STC-05A
2.6.15.9-1 ..... Revision STC-05A
2.6.15.10-1 ..... Revision 15
2.6.15.11-1 ..... Revision 15
2.6.15.11-2 ..... Revision 15
2.6.15.11-3 ..... Revision 15
2.6.15.12-1 ..... Revision STC-05A
2.6.15.12-2 ..... Revision 15
2.6.16-1 ..... Revision 15
2.6.16-2 ..... Revision 15
2.6.16-3 ..... Revision 15
2.6.16-4 ..... Revision 15
2.6.16-5 ..... Revision 15
2.6.16-6 ..... Revision 15
2.6.16-7 ..... Revision 15
2.6.16-8 ..... Revision 15
2.6.16-9 ..... Revision 15
2.6.16-10 ..... Revision 15
2.6.16-11 ..... Revision 15
2.6.16-12 ..... Revision 15
2.6.16-13 ..... Revision 15
2.6.16-14 ..... Revision 15
2.6.16-15 ..... Revision 15
2.6.16-16 ..... Revision 15

List of Effective Pages (continued)

2.6.16-17 ..... Revision 15
2.6.16-18 ..... Revision 15
2.6.16-19 ..... Revision 15
2.6.16-20 ..... Revision 15
2.6.16-21 ..... Revision 15
2.6.16-22 ..... Revision 15
2.6.16-23 ..... Revision 15
2.6.16-24 ..... Revision 15
2.6.16-25 ..... Revision 15
2.6.16-26 ..... Revision 15
2.6.16-27 ..... Revision 15
2.6.16-28 ..... Revision 15
2.6.16-29 ..... Revision 15
2.6.16-30 ..... Revision 15
2.6.16-31 ..... Revision 15
2.6.16-32 ..... Revision 15
2.6.16-33 ..... Revision 15
2.6.16-34 ..... Revision 15
2.6.16-35 ..... Revision 15
2.6.16-36 ..... Revision 15
2.6.16-37 ..... Revision 15
2.6.16-38 ..... Revision 15
2.6.16-39 ..... Revision 15
2.6.16-40 ..... Revision 15
2.6.16-41 ..... Revision 15
2.6.16-42 ..... Revision 15
2.6.16-43 ..... Revision 15
2.6.16-44 ..... Revision 15
2.6.16-45 ..... Revision 15
2.6.16-46 ..... Revision 15
2.6.16-47 ..... Revision 15
2.6.16-48 ..... Revision 15
2.6.16-49 ..... Revision 15
2.6.16-50 ..... Revision 15
2.6.16-51 ..... Revision 15
2.6.16-52 ..... Revision 15
2.6.16-53 ..... Revision 15
2.6.16-54 ..... Revision 15
2.6.16-55 ..... Revision 15
2.6.16-56 ..... Revision 15
2.6.16-57 ..... Revision 15
2.6.16-58 ..... Revision 15
2.6.16-59 ..... Revision 15
2.6.16-60 ..... Revision 15
2.6.17-1 ..... Revision 15
2.6.17-2 ..... Revision 15
2.6.17-3 ..... Revision 15
2.6.17-4 ..... Revision 15
2.6.17-5 ..... Revision 15
2.6.17-6 ..... Revision 15
2.6.17-7 ..... Revision 15
2.6.17-8 ..... Revision 15
2.6.17-9 ..... Revision 15
2.6.17-10 ..... Revision 15
2.6.17-11 ..... Revision 15
2.6.17-12 ..... Revision 15
2.6.17-13 ..... Revision 15
2.6.18-1 ..... Revision 15
2.6.18-2 ..... Revision 15
2.6.18-3 ..... Revision 15
2.6.18-4 ..... Revision 15
2.6.18-5 ..... Revision 15
2.6.18-6 ..... Revision 15
2.6.19-1 ..... Revision 15
2.6.19-2 ..... Revision 15
2.6.19-3 ..... Revision 15
2.6.19-4 ..... Revision 15
2.6.19-5 ..... Revision 15
2.6.19-6 ..... Revision 15
2.6.19-7 ..... Revision 15

List of Effective Pages (continued)

2.6.19-8 ..... Revision 15
2.6.19-9 ..... Revision 15
2.6.19-10 ..... Revision 15
2.6.19-11 ..... Revision 15
2.6.19-12 ..... Revision 15
2.6.19-13 ..... Revision 15
2.6.19-14 ..... Revision 15
2.6.19-15 ..... Revision 15
2.6.19-16 ..... Revision 15
2.6.19-17 ..... Revision 15
2.6.19-18 ..... Revision 15
2.6.19-19 ..... Revision 15
2.6.19-20 ..... Revision 15
2.6.19-21 ..... Revision 15
2.6.19-22 ..... Revision 15
2.6.19-23 ..... Revision 15
2.6.20-1 ..... Revision 15
2.6.20-2 ..... Revision 15
2.6.20-3 ..... Revision 15
2.6.20-4 ..... Revision 15
2.6.20-5 ..... Revision 15
2.6.20-6 ..... Revision 15
2.6.20-7 ..... Revision 15
2.6.20-8 ..... Revision 15
2.6.20-9 ..... Revision 15
2.6.20-10 ..... Revision 15
2.6.20-11 ..... Revision 15
2.6.20-12 ..... Revision 15
2.6.20-13 ..... Revision 15
2.6.20-14 ..... Revision 15
2.6.20-15 ..... Revision 15
2.6.20-16 ..... Revision 15
2.6.20-17 ..... Revision 15
2.6.20-18 ..... Revision 15
2.6.20-19 ..... Revision 15
2.6.20-20 ..... Revision 15
2.6.21-1 ..... Revision 15
2.6.21-2 ..... Revision 15
2.7-1 ..... Revision 15
2.7-2 ..... Revision 15
2.7.1-1 ..... Revision 15
2.7.1-2 ..... Revision 15
2.7.1.1-1 ..... Revision 15
2.7.1.1-2 ..... Revision 15
2.7.1.1-3 ..... Revision 15
2.7.1.1-4 ..... Revision 15
2.7.1.1-5 ..... Revision 15
2.7.1.1-6 ..... Revision 15
2.7.1.1-7 ..... Revision 15
2.7.1.1-8 ..... Revision 15
2.7.1.1-9 ..... Revision 15
2.7.1.1-10 ..... Revision 15
2.7.1.1-11 ..... Revision 15
2.7.1.1-12 ..... Revision 15
2.7.1.1-13 ..... Revision 15
2.7.1.1-14 ..... Revision 15
2.7.1.1-15 ..... Revision 15
2.7.1.2-1 ..... Revision 15
2.7.1.2-2 ..... Revision 15
2.7.1.2-3 ..... Revision 15
2.7.1.2-4 ..... Revision 15
2.7.1.2-5 ..... Revision 15
2.7.1.2-6 ..... Revision 15
2.7.1.2-7 ..... Revision 15
2.7.1.2-8 ..... Revision 15
2.7.1.2-9 ..... Revision 15
2.7.1.2-10 ..... Revision 15
2.7.1.2-11 ..... Revision 15
2.7.1.2-12 ..... Revision 15
2.7.1.2-13 ..... Revision 15

List of Effective Pages (continued)

2.7.1.2-14 ..... Revision 15
2.7.1.2-15 ..... Revision 15
2.7.1.2-16 ..... Revision 15
2.7.1.3-1 ..... Revision 15
2.7.1.3-2 ..... Revision 15
2.7.1.3-3 ..... Revision 15
2.7.1.3-4 ..... Revision 15
2.7.1.3-5 ..... Revision 15
2.7.1.3-6 ..... Revision 15
2.7.1.3-7 ..... Revision 15
2.7.1.3-8 ..... Revision 15
2.7.1.3-9 ..... Revision 15
2.7.1.4-1. ..... Revision 15
2.7.1.4-2 ..... Revision 15
2.7.1.4-3 ..... Revision 15
2.7.1.4-4 ..... Revision 15
2.7.1.4-5 ..... Revision 15
2.7.1.4-6 ..... Revision 15
2.7.1.4-7 ..... Revision 15
2.7.1.4-8 ..... Revision 15
2.7.1.4-9 ..... Revision 15
2.7.1.4-10 ..... Revision 15
2.7.1.4-11 ..... Revision 15
2.7.1.5-1 ..... Revision 15
2.7.1.5-2 ..... Revision 15
2.7.1.5-3 ..... Revision 15
2.7.1.6-1 ..... Revision 15
2.7.1.6-2 ..... Revision 15
2.7.1.6-3 ..... Revision 15
2.7.1.6-4 ..... Revision 15
2.7.1.6-5 ..... Revision 15
2.7.1.6-6 ..... Revision 15
2.7.1.6-7 ..... Revision 15
2.7.1.6-8 ..... Revision 15
2.7.1.6-9 ..... Revision 15
2.7.1.6-10 ..... Revision 15
2.7.1.6-11 ..... Revision 15
2.7.1.6-12 ..... Revision 15
2.7.1.6-13 ..... Revision 15
2.7.1.6-14 ..... Revision 15
2.7.1.6-15 ..... Revision 15
2.7.1.6-16 ..... Revision 15
2.7.2-1 ..... Revision 15
2.7.2.1-1 ..... Revision 15
2.7.2.1-2 ..... Revision 15
2.7.2.1-3 ..... Revision 15
2.7.2.1-4 ..... Revision 15
2.7.2.1-5 ..... Revision 15
2.7.2.2-1 ..... Revision 15
2.7.2.2-2 ..... Revision 15
2.7.2.2-3 ..... Revision 15
2.7.2.2-4 ..... Revision 15
2.7.2.2-5 ..... Revision 15
2.7.2.2-6 ..... Revision 15
2.7.2.2-7 ..... Revision 15
2.7.2.2-8 ..... Revision 15
2.7.2.2-9 ..... Revision 15
2.7.2.2-10 ..... Revision 15
2.7.2.3-1 ..... Revision 15
2.7.2.3-2 ..... Revision 15
2.7.2.3-3 ..... Revision 15
2.7.2.3-4 ..... Revision 15
2.7.2.3-5 ..... Revision 15
2.7.2.3-6 ..... Revision 15
2.7.2.4-1 ..... Revision 15
2.7.2.4-2 ..... Revision 15
2.7.2.4-3 ..... Revision 15
2.7.2.4-4 ..... Revision 15
2.7.2.4-5 ..... Revision 15
2.7.2.4-6 ..... Revision 15

List of Effective Pages (continued)

2.7.2.4-7 ..... Revision 15
2.7.2.5-1 ..... Revision 15
2.7.2.6-1 ..... Revision 15
2.7.3.1-1 ..... Revision 15
2.7.3.2-1 ..... Revision 15
2.7.3.2-2 ..... Revision 15
2.7.3.2-3 ..... Revision 15
2.7.3.2-4 ..... Revision 15
2.7.3.2-5 ..... Revision 15
2.7.3.3-1 ..... Revision 15
2.7.3.3-2 ..... Revision 15
2.7.3.3-3 ..... Revision 15
2.7.3.4-1 ..... Revision 15
2.7.3.4-2 ..... Revision 15
2.7.3.5-1 ..... Revision 15
2.7.3.6-1 ..... Revision 15
2.7.4-1 ..... Revision STC-05A
2.7.5-1 ..... Revision STC-05A
2.7.6-1 ..... Revision STC-05A
2.7.7-1 ..... Revision 15
2.7.7-2 ..... Revision 15
2.7.7-3 ..... Revision 15
2.7.7-4 ..... Revision 15
2.7.8-1 ..... Revision 15
2.7.8-2 ..... Revision 15
2.7.8-3 ..... Revision 15
2.7.8-4 ..... Revision 15
2.7.8.1-1 ..... Revision 15
2.7.8.1-2 ..... Revision 15
2.7.8.1-3 ..... Revision 15
2.7.8.1-4 ..... Revision 15
2.7.8.1-5 ..... Revision 15
2.7.8.1-6 ..... Revision 15
2.7.8.1-7 ..... Revision 15
2.7.8.1-8 ..... Revision 15
2.7.8.1-9 ..... Revision 15
2.7.8.1-10 ..... Revision 15
2.7.8.1-11 ..... Revision 15
2.7.8.1-12 ..... Revision 15
2.7.8.1-13 ..... Revision 15
2.7.8.1-14 ..... Revision 15
2.7.8.1-15 ..... Revision 15
2.7.8.1-16 ..... Revision 15
2.7.8.1-17 ..... Revision 15
2.7.8.1-18 ..... Revision 15
2.7.8.1-19 ..... Revision 15
2.7.8.1-20 ..... Revision 15
2.7.8.1-21 ..... Revision 15
2.7.8.1-22 ..... Revision 15
2.7.8.1-23 ..... Revision 15
2.7.8.1-24 ..... Revision 15
2.7.8.1-25 ..... Revision 15
2.7.8.1-26 ..... Revision 15
2.7.8.1-27 ..... Revision 15
2.7.8.1-28 ..... Revision 15
2.7.8.1-29 ..... Revision 15
2.7.8.1-30 ..... Revision 15
2.7.8.1-31 ..... Revision 15
2.7.8.1-32 ..... Revision 15
2.7.8.1-33 ..... Revision 15
2.7.8.1-34 ..... Revision 15
2.7.8.1-35 ..... Revision 15
2.7.8.1-36 ..... Revision 15
2.7.8.1-37 ..... Revision 15
2.7.8.1-38 ..... Revision 15
2.7.8.1-39 ..... Revision 15
2.7.8.1-40 ..... Revision 15
2.7.8.1-41 ..... Revision 15
2.7.8.1-42 ..... Revision 15
2.7.8.1-43 ..... Revision 15

List of Effective Pages (continued)

2.7.8.2-1 ..... Revision 15
2.7.8.2-2 ..... Revision 15
2.7.8.3-1 ..... Revision 15
2.7.8.3-2 ..... Revision 15
2.7.8.3-3 ..... Revision 15
2.7.8.3-4 ..... Revision 15
2.7.8.3-5 ..... Revision 15
2.7.8.3-6 ..... Revision 15
2.7.8.3-7 ..... Revision 15
2.7.8.3-8 ..... Revision 15
2.7.8.3-9 ..... Revision 15
2.7.8.3-10 ..... Revision 15
2.7.8.3-11 ..... Revision 15
2.7.8.3-12 ..... Revision 15
2.7.8.3-13 ..... Revision 15
2.7.8.4-1 ..... Revision 15
2.7.8.4-2 ..... Revision 15
2.7.8.4-3 ..... Revision 15
2.7.8.4-4 ..... Revision 15
2.7.8.4-5 ..... Revision 15
2.7.8.4-6 ..... Revision 15
2.7.8.4-7 ..... Revision 15
2.7.8.4-8 ..... Revision 15
2.7.8.4-9 ..... Revision 15
2.7.8.4-10 ..... Revision 15
2.7.8.5-1 ..... Revision 15
2.7.9-1 ..... Revision 15
2.7.9-2 ..... Revision 15
2.7.9-3 ..... Revision 15
2.7.9-4 ..... Revision 15
2.7.9-5 ..... Revision 15
2.7.9-6 ..... Revision 15
2.7.9-7 ..... Revision 15
2.7.9-8 ..... Revision 15
2.7.9-9 ..... Revision 15
2.7.9-10 ..... Revision 15
2.7.9-11 ..... Revision 15
2.7.9-12 ..... Revision 15
2.7.9-13 ..... Revision 15
2.7.9-14 ..... Revision 15
2.7.9-15 ..... Revision 15
2.7.9-16 ..... Revision 15
2.7.9-17 ..... Revision 15
2.7.9-18 ..... Revision 15
2.7.9-19 ..... Revision 15
2.7.9-20 ..... Revision 15
2.7.9-21 ..... Revision 15
2.7.9-22 ..... Revision 15
2.7.9-23 ..... Revision 15
2.7.9-24 ..... Revision 15
2.7.9-25 ..... Revision 15
2.7.9-26 ..... Revision 15
2.7.9-27 ..... Revision 15
2.7.9-28 ..... Revision 15
2.7.9-29 ..... Revision 15
2.7.9-30 ..... Revision 15
2.7.9-31 ..... Revision 15
2.7.9-32 ..... Revision 15
2.7.9-33 ..... Revision 15
2.7.9-34 ..... Revision 15
2.7.9-35 ..... Revision 15
2.7.9-36 ..... Revision 15
2.7.9-37 ..... Revision 15
2.7.9-38 ..... Revision 15
2.7.9-39 ..... Revision 15
2.7.9-40 ..... Revision 15
2.7.10-1 ..... Revision 15
2.7.10-2 ..... Revision 15
2.7.10-3 ..... Revision 15
2.7.10-4 ..... Revision 15

List of Effective Pages (continued)

2.7.10-5 ..... Revision 15
2.7.10-6 ..... Revision 15
2.7.10-7 ..... Revision 15
2.7.10-8 ..... Revision 15
2.7.10-9 ..... Revision 15
2.7.10-10 ..... Revision 15
2.7.10-11 ..... Revision 15
2.7.10-12 ..... Revision 15
2.7.11-1 ..... Revision 15
2.7.11-2 ..... Revision 15
2.7.11-3 ..... Revision 15
2.7.11-4 ..... Revision 15
2.7.11-5 ..... Revision 15
2.7.11-6 ..... Revision 15
2.7.11-7 ..... Revision 15
2.7.11-8 ..... Revision 15
2.7.11-9 ..... Revision 15
2.7.11-10 ..... Revision 15
2.7.11-11 ..... Revision 15
2.7.11-12 ..... Revision 15
2.7.11-13 ..... Revision 15
2.7.11-14 ..... Revision 15
2.7.11-15 ..... Revision 15
2.7.11-16 ..... Revision 15
2.7.12-1 ..... Revision 15
2.7.12-2 ..... Revision 15
2.7.12-3 ..... Revision STC-05A
2.7.12-4 ..... Revision 15
2.7.12-5 ..... Revision STC-05A
2.7.12-6 ..... Revision STC-05A
2.7.12-7 ..... Revision STC-05A
2.7.12-8 ..... Revision STC-05A
2.7.12-9 ..... Revision STC-05A
2.7.12-10 ..... Revision STC-05A
2.7.13-1 ..... Revision 15
2.7.13-2 ..... Revision 15
2.7.13-3 ..... Revision 15
2.7.13-4 ..... Revision 15
2.7.13.1-1 ..... Revision 15
2.7.13.1-2 ..... Revision 15
2.7.13.1-3 ..... Revision 15
2.7.13.1-4 ..... Revision 15
2.7.13.1-5 ..... Revision 15
2.7.13.1-6 ..... Revision 15
2.7.13.1-7 ..... Revision 15
2.7.13.1-8 ..... Revision 15
2.7.13.1-9 ..... Revision 15
2.7.13.1-10 ..... Revision 15
2.7.13.1-11 ..... Revision 15
2.7.13.1-12 ..... Revision 15
2.7.13.1-13 ..... Revision 15
2.7.13.1-14 ..... Revision 15
2.7.13.1-15 ..... Revision 15
2.7.13.1-16 ..... Revision 15
2.7.13.1-17 ..... Revision 15
2.7.13.1-18 ..... Revision 15
2.7.13.2-1 ..... Revision 15
2.7.13.2-2 ..... Revision 15
2.7.13.3-1 ..... Revision 15
2.7.13.3-2 ..... Revision 15
2.7.13.3-3 ..... Revision 15
2.7.13.3-4 ..... Revision 15
2.7.13.4-1 ..... Revision 15
2.7.13.4-2 ..... Revision 15
2.7.13.4-3 ..... Revision 15
2.7.13.4-4 ..... Revision 15
2.7.13.4-5 ..... Revision 15
2.7.13.4-6 ..... Revision 15
2.7.13.4-7 ..... Revision 15
2.7.13.4-8 ..... Revision 15

List of Effective Pages (continued)

2.7.13.5-1 ..... Revision 15
2.7.13.5-2 ..... Revision 15
2.7.14-1 ..... Revision 15
2.7.14-2 ..... Revision 15
2.7.14-3 ..... Revision 15
2.7.14-4 ..... Revision 15
2.7.14-5 ..... Revision 15
2.7.14-6 ..... Revision 15
2.7.14-7 ..... Revision 15
2.7.14-8 ..... Revision 15
2.7.14-9 ..... Revision 15
2.7.14-10 ..... Revision 15
2.7.14-11 ..... Revision 15
2.7.14-12 ..... Revision 15
2.7.14-13 ..... Revision 15
2.7.15-1 ..... Revision 15
2.7.15-2 ..... Revision 15
2.7.15-3 ..... Revision 15
2.7.15-4 ..... Revision 15
2.7.15-5 ..... Revision 15
2.7.15-6 ..... Revision 15
2.7.15-7 ..... Revision 15
2.7.15-8 ..... Revision 15
2.7.15-9 ..... Revision 15
2.7.15-10 ..... Revision 15
2.7.15-11 ..... Revision 15
2.7.15-12 ..... Revision 15
2.7.15-13 ..... Revision 15
2.7.15-15 ..... Revision 15
2.7.15-16 ..... Revision 15
2.8-1 ..... Revision 15
2.9-1 ..... Revision 15
2.9-2 ..... Revision 15
2.9-3 ..... Revision 15
2.9-4 ..... Revision 15
2.9-5 ..... Revision 15
2.9-6 ..... Revision 15
2.9-7 ..... Revision 15
2.9-8 ..... Revision 15
2.9-9 ..... Revision 15
2.9-10 ..... Revision 15
2.9-11 ..... Revision 15
2.10.1-1 ..... Revision 15
2.10.1-2 ..... Revision 15
2.10.1-3 ..... Revision 15
2.10.1-4 ..... Revision 15
2.10.2-1 ..... Revision 15
2.10.2-2 ..... Revision 15
2.10.2-3 ..... Revision 15
2.10.2-4 ..... Revision 15
2.10.2-5 ..... Revision 15
2.10.2-6 ..... Revision 15
2.10.2-7 ..... Revision 15
2.10.2-8 ..... Revision 15
2.10.2-9 ..... Revision 15
2.10.2-10 ..... Revision 15
2.10.2-11 ..... Revision 15
2.10.2-12 ..... Revision 15
2.10.2-13 ..... Revision 15
2.10.2-14 ..... Revision 15
2.10.2-15 ..... Revision 15
2.10.2-16 ..... Revision 15
2.10.2-17 ..... Revision 15
2.10.2-18 ..... Revision 15
2.10.2-19 ..... Revision 15
2.10.2-20 ..... Revision 15
2.10.2-21 ..... Revision 15
2.10.2-22 ..... Revision 15
2.10.2-23 ..... Revision 15
2.10.2-24 ..... Revision 15

List of Effective Pages (continued)

2.10.2-25 ..... Revision 15
2.10.2-26 ..... Revision 15
2.10.2-27 ..... Revision 15
2.10.2-28 ..... Revision 15
2.10.2-29 ..... Revision 15
2.10.2-30 ..... Revision 15
2.10.2-31 ..... Revision 15
2.10.2-32 ..... Revision 15
2.10.2-33 ..... Revision 15
2.10.2-34 ..... Revision 15
2.10.2-35 ..... Revision 15
2.10.2-36 ..... Revision 15
2.10.2-37 ..... Revision 15
2.10.2-38 ..... Revision 15
2.10.2-39 ..... Revision 15
2.10.2-40 ..... Revision 15
2.10.2-41 ..... Revision 15
2.10.2-42 ..... Revision 15
2.10.2-43 ..... Revision 15
2.10.2-44 ..... Revision 15
2.10.2-45 ..... Revision 15
2.10.2-46 ..... Revision 15
2.10.2-47 ..... Revision 15
2.10.2-48 ..... Revision 15
2.10.2-49 ..... Revision 15
2.10.2-50 ..... Revision 15
2.10.2-51 ..... Revision 15
2.10.2-52 ..... Revision 15
2.10.2-53 ..... Revision 15
2.10.2-54 ..... Revision 15
2.10.2-55 ..... Revision 15
2.10.2-56 ..... Revision 15
2.10.2-57 ..... Revision 15
2.10.2-58 ..... Revision 15
2.10.2-59 ..... Revision 15
2.10.2-60 ..... Revision 15
2.10.2-61 ..... Revision 15
2.10.2-62 ..... Revision 15
2.10.2-63 ..... Revision 15
2.10.2-64 ..... Revision 15
2.10.2-65 ..... Revision 15
2.10.2-66 ..... Revision 15
2.10.2-67 ..... Revision 15
2.10.2-68 ..... Revision 15
2.10.2-69 ..... Revision 15
2.10.2-70 ..... Revision 15
2.10.2-71 ..... Revision 15
2.10.2-72 ..... Revision 15
2.10.2-73 ..... Revision 15
2.10.2-74 ..... Revision 15
2.10.2-75 ..... Revision 15
2.10.2-76 ..... Revision 15
2.10.2-77 ..... Revision 15
2.10.2-78 ..... Revision 15
2.10.2-79 ..... Revision 15
2.10.2-80 ..... Revision 15
2.10.2-81 ..... Revision 15
2.10.2-82 ..... Revision 15
2.10.2-83 ..... Revision 15
2.10.2-84 ..... Revision 15
2.10.2-85 ..... Revision 15
2.10.2-86 ..... Revision 15
2.10.2-87 ..... Revision 15
2.10.2-88 ..... Revision 15
2.10.2-89 ..... Revision 15
2.10.2-90 ..... Revision 15
2.10.2-91 ..... Revision 15
2.10.2-92 ..... Revision 15
2.10.2-93 ..... Revision 15
2.10.2-94 ..... Revision 15

List of Effective Pages (continued)

2.10.3-1 ..... Revision 15
2.10.3-2 ..... Revision 15
2.10.3-3 ..... Revision 15
2.10.3-4 ..... Revision 15
2.10.3-5 ..... Revision 15
2.10.3-6 ..... Revision 15
2.10.3-7 ..... Revision 15
2.10.3-8 ..... Revision 15
2.10.4-1 ..... Revision 15
2.10.4-2 ..... Revision 15
2.10.4-3 ..... Revision 15
2.10.4-4 ..... Revision 15
2.10.4-5 ..... Revision 15
2.10.4-6. ..... Revision 15
2.10.4-7. ..... Revision 15
2.10.4-8 ..... Revision 15
2.10.4-9 ..... Revision 15
2.10.4-10 ..... Revision 15
2.10.4-11 ..... Revision 15
2.10.4-12 ..... Revision 15
2.10.4-13 ..... Revision 15
2.10.4-14 ..... Revision 15
2.10.4-15 ..... Revision 15
2.10.4-16 ..... Revision 15
2.10.4-17 ..... Revision 15
2.10.4-18 ..... Revision 15
2.10.4-19 ..... Revision 15
2.10.4-20 ..... Revision 15
2.10.4-21 ..... Revision 15
2.10.4-22 ..... Revision 15
2.10.4-23 ..... Revision 15
2.10.4-24 ..... Revision 15
2.10.4-25 ..... Revision 15
2.10.4-26 ..... Revision 15
2.10.4-27 ..... Revision 15
2.10.4-28 ..... Revision 15
2.10.4-29 ..... Revision 15
2.10.4-30 ..... Revision 15
2.10.4-31 ..... Revision 15
2.10.4-32 ..... Revision 15
2.10.4-33 ..... Revision 15
2.10.4-34 ..... Revision 15
2.10.4-35 ..... Revision 15
2.10.4-36 ..... Revision 15
2.10.4-37 ..... Revision 15
2.10.4-38 ..... Revision 15
2.10.4-39 ..... Revision 15
2.10.4-40 ..... Revision 15
2.10.4-41 ..... Revision 15
2.10.4-42 ..... Revision 15
2.10.4-43 ..... Revision 15
2.10.4-44 ..... Revision 15
2.10.4-45 ..... Revision 15
2.10.4-46 ..... Revision 15
2.10.4-47 ..... Revision 15
2.10.4-48 ..... Revision 15
2.10.4-49 ..... Revision 15
2.10.4-50 ..... Revision 15
2.10.4-51 ..... Revision 15
2.10.4-52 ..... Revision 15
2.10.4-53 ..... Revision 15
2.10.4-54 ..... Revision 15
2.10.4-55 ..... Revision 15
2.10.4-56 ..... Revision 15
2.10.4-57 ..... Revision 15
2.10.4-58 ..... Revision 15
2.10.4-59 ..... Revision 15
2.10.4-60 ..... Revision 15
2.10.4-61 ..... Revision 15
2.10.4-62 ..... Revision 15

List of Effective Pages (continued)

2.10.4-63 ..... Revision 15
2.10.4-64 ..... Revision 15
2.10.4-65 ..... Revision 15
2.10.4-66 ..... Revision 15
2.10.4-67 ..... Revision 15
2.10.4-68 ..... Revision 15
2.10.4-69 ..... Revision 15
2.10.4-70 ..... Revision 15
2.10.4-71 ..... Revision 15
2.10.4-72 ..... Revision 15
2.10.4-73 ..... Revision 15
2.10.4-74 ..... Revision 15
2.10.4-75 ..... Revision 15
2.10.4-76 ..... Revision 15
2.10.4-77 ..... Revision 15
2.10.4-78 ..... Revision 15
2.10.4-79 ..... Revision 15
2.10.4-80 ..... Revision 15
2.10.4-81 ..... Revision 15
2.10.4-82 ..... Revision 15
2.10.4-83 ..... Revision 15
2.10.4-84 ..... Revision 15
2.10.4-85 ..... Revision 15
2.10.4-86 ..... Revision 15
2.10.4-87 ..... Revision 15
2.10.4-88 ..... Revision 15
2.10.4-89 ..... Revision 15
2.10.4-90 ..... Revision 15
2.10.4-91 ..... Revision 15
2.10.4-92 ..... Revision 15
2.10.4-93 ..... Revision 15
2.10.4-94 ..... Revision 15
2.10.4-95 ..... Revision 15
2.10.4-96 ..... Revision 15
2.10.4-97 ..... Revision 15
2.10.4-98 ..... Revision 15
2.10.4-99 ..... Revision 15
2.10.4-100 ..... Revision 15
2.10.4-101 ..... Revision 15
2.10.4-102 ..... Revision 15
2.10.4-103 ..... Revision 15
2.10.4-104 ..... Revision 15
2.10.4-105 ..... Revision 15
2.10.4-106 ..... Revision 15
2.10.4-107 ..... Revision 15
2.10.4-108 ..... Revision 15
2.10.4-109 ..... Revision 15
2.10.4-110 ..... Revision 15
2.10.4-111 ..... Revision 15
2.10.4-112 ..... Revision 15
2.10.4-113 ..... Revision 15
2.10.4-114 ..... Revision 15
2.10.4-115 ..... Revision 15
2.10.4-116 ..... Revision 15
2.10.4-117 ..... Revision 15
2.10.4-118 ..... Revision 15
2.10.4-119 ..... Revision 15
2.10.4-120 ..... Revision 15
2.10.4-121 ..... Revision 15
2.10.4-122 ..... Revision 15
2.10.4-123 ..... Revision 15
2.10.4-124 ..... Revision 15
2.10.4-125 ..... Revision 15
2.10.4-126 ..... Revision 15
2.10.4-127 ..... Revision 15
2.10.4-128 ..... Revision 15
2.10.4-129 ..... Revision 15
2.10.4-130 ..... Revision 15
2.10.4-131 ..... Revision 15
2.10.4-132 ..... Revision 15

List of Effective Pages (continued)

2.10.4-133 ..... Revision 15
2.10.4-134 ..... Revision 15
2.10.4-135 ..... Revision 15
2.10.4-136 ..... Revision 15
2.10.4-137 ..... Revision 15
2.10.4-138 ..... Revision 15
2.10.4-139 ..... Revision 15
2.10.4-140 ..... Revision 15
2.10.4-141 ..... Revision 15
2.10.4-142 ..... Revision 15
2.10.4-143 ..... Revision 15
2.10.4-144 ..... Revision 15
2.10.4-145 ..... Revision 15
2.10.4-146 ..... Revision 15
2.10.4-147 ..... Revision 15
2.10.4-148 ..... Revision 15
2.10.4-149 ..... Revision 15
2.10.4-150 ..... Revision 15
2.10.4-151 ..... Revision 15
2.10.4-152 ..... Revision 15
2.10.4-153 ..... Revision 15
2.10.4-154 ..... Revision 15
2.10.4-155 ..... Revision 15
2.10.4-156 ..... Revision 15
2.10.4-157 ..... Revision 15
2.10.4-158 ..... Revision 15
2.10.4-159 ..... Revision 15
2.10.4-160 ..... Revision 15
2.10.4-161 ..... Revision 15
2.10.4-162 ..... Revision 15
2.10.4-163 ..... Revision 15
2.10.4-164 ..... Revision 15
2.10.4-165 ..... Revision 15
2.10.4-166 ..... Revision 15
2.10.4-167 ..... Revision 15
2.10.4-168 ..... Revision 15
2.10.4-169 ..... Revision 15
2.10.4-170 ..... Revision 15
2.10.4-171 ..... Revision 15
2.10.4-172 ..... Revision 15
2.10.4-173 ..... Revision 15
2.10.4-174 ..... Revision 15
2.10.4-175 ..... Revision 15
2.10.4-176 ..... Revision 15
2.10.4-177 ..... Revision 15
2.10.4-178 ..... Revision 15
2.10.4-179 ..... Revision 15
2.10.4-180 ..... Revision 15
2.10.4-181 ..... Revision 15
2.10.4-182 ..... Revision 15
2.10.4-183 ..... Revision 15
2.10.4-184 ..... Revision 15
2.10.4-185 ..... Revision 15
2.10.4-186 ..... Revision 15
2.10.4-187 ..... Revision 15
2.10.4-188 ..... Revision 15
2.10.4-189 ..... Revision 15
2.10.4-190 ..... Revision 15
2.10.4-191 ..... Revision 15
2.10.4-192 ..... Revision 15
2.10.4-193 ..... Revision 15
2.10.4-194 ..... Revision 15
2.10.4-195 ..... Revision 15
2.10.4-196 ..... Revision 15
2.10.4-197 ..... Revision 15
2.10.4-198 ..... Revision 15
2.10.4-199 ..... Revision 15
2.10.4-200 ..... Revision 15
2.10.4-201 ..... Revision 15
2.10.4-202 ..... Revision 15

List of Effective Pages (continued)

2.10.4-203 ..... Revision 15
2.10.4-204 ..... Revision 15
2.10.4-205 ..... Revision 15
2.10.4-206 ..... Revision 15
2.10.4-207 ..... Revision 15
2.10.4-208 ..... Revision 15
2.10.4-209 ..... Revision 15
2.10.4-210 ..... Revision 15
2.10.4-211 ..... Revision 15
2.10.4-212 ..... Revision 15
2.10.4-213 ..... Revision 15
2.10.4-214 ..... Revision 15
2.10.4-215 ..... Revision 15
2.10.4-216 ..... Revision 15
2.10.4-217 ..... Revision 15
2.10.4-218 ..... Revision 15
2.10.4-219 ..... Revision 15
2.10.4-220 ..... Revision 15
2.10.4-221 ..... Revision 15
2.10.4-222 ..... Revision 15
2.10.4-223 ..... Revision 15
2.10.4-224 ..... Revision 15
2.10.4-225 ..... Revision 15
2.10.4-226 ..... Revision 15
2.10.4-227 ..... Revision 15
2.10.4-228 ..... Revision 15
2.10.4-229 ..... Revision 15
2.10.4-230 ..... Revision 15
2.10.4-231 ..... Revision 15
2.10.4-232 ..... Revision 15
2.10.4-233 ..... Revision 15
2.10.4-234 ..... Revision 15
2.10.4-235 ..... Revision 15
2.10.4-236 ..... Revision 15
2.10.4-237 ..... Revision 15
2.10.4-238 ..... Revision 15
2.10.4-239 ..... Revision 15
2.10.4-240 ..... Revision 15
2.10.4-241 ..... Revision 15
2.10.4-242 ..... Revision 15
2.10.4-243 ..... Revision 15
2.10.4-244 ..... Revision 15
2.10.4-245 ..... Revision 15
2.10.4-246 ..... Revision 15
2.10.4-247 ..... Revision 15
2.10.4-248 ..... Revision 15
2.10.4-249 ..... Revision 15
2.10.4-250 ..... Revision 15
2.10.4-251 ..... Revision 15
2.10.4-252 ..... Revision 15
2.10.4-253 ..... Revision 15
2.10.4-254 ..... Revision 15
2.10.4-255 ..... Revision 15
2.10.4-256 ..... Revision 15
2.10.4-257 ..... Revision 15
2.10.4-258 ..... Revision 15
2.10.4-259 ..... Revision 15
2.10.4-260 ..... Revision 15
2.10.4-261 ..... Revision 15
2.10.4-262 ..... Revision 15
2.10.4-263 ..... Revision 15
2.10.4-264 ..... Revision 15
2.10.4-265 ..... Revision 15
2.10.4-266 ..... Revision 15
2.10.4-267 ..... Revision 15
2.10.4-268 ..... Revision 15
2.10.4-269 ..... Revision 15
2.10.4-270 ..... Revision 15
2.10.4-271 ..... Revision 15
2.10.4-272 ..... Revision 15

List of Effective Pages (continued)

2.10.4-273 ..... Revision 15
2.10.4-274 ..... Revision 15
2.10.4-275 ..... Revision 15
2.10.4-276 ..... Revision 15
2.10.4-277 ..... Revision 15
2.10.4-278 ..... Revision 15
2.10.4-279 ..... Revision 15
2.10.4-280 ..... Revision 15
2.10.4-281 ..... Revision 15
2.10.4-282 ..... Revision 15
2.10.4-283 ..... Revision 15
2.10.4-284 ..... Revision 15
2.10.4-285 ..... Revision 15
2.10.4-286 ..... Revision 15
2.10.4-287 ..... Revision 15
2.10.4-288 ..... Revision 15
2.10.5-1 ..... Revision 15
2.10.5-2 ..... Revision 15
2.10.5-3 ..... Revision 15
2.10.5-4 ..... Revision 15
2.10.5-5 ..... Revision 15
2.10.5-6 ..... Revision 15
2.10.5-7 ..... Revision 15
2.10.5-8 ..... Revision 15
2.10.5-9 ..... Revision 15
2.10.5-10 ..... Revision 15
2.10.5-11 ..... Revision 15
2.10.5-12 ..... Revision 15
2.10.5-13 ..... Revision 15
2.10.5-14 ..... Revision 15
2.10.5-15 ..... Revision 15
2.10.5-16 ..... Revision 15
2.10.5-17 ..... Revision 15
2.10.5-18 ..... Revision 15
2.10.5-19 ..... Revision 15
2.10.5-20 ..... Revision 15
2.10.5-21 ..... Revision 15
2.10.5-22 ..... Revision 15
2.10.6-1 ..... Revision 15
2.10.6-2 ..... Revision 15
2.10.6-3 ..... Revision 15
2.10.6-4 ..... Revision 15
2.10.6-5 ..... Revision 15
2.10.6-6 ..... Revision 15
2.10.6-7 ..... Revision 15
2.10.6-8 ..... Revision 15
2.10.6-9 ..... Revision 15
2.10.6-10 ..... Revision 15
2.10.6-11 ..... Revision 15
2.10.6-12 ..... Revision 15
2.10.6-13 ..... Revision 15
2.10.6-14 ..... Revision 15
2.10.6-15 ..... Revision 15
2.10.6-16 ..... Revision 15
2.10.6-17 ..... Revision 15
2.10.6-18 ..... Revision 15
2.10.6-19 ..... Revision 15
2.10.6-20 ..... Revision 15
2.10.6-21 ..... Revision 15
2.10.6-22 ..... Revision 15
2.10.6-23 ..... Revision 15
2.10.6-24 ..... Revision 15
2.10.6-25 ..... Revision 15
2.10.6-26 ..... Revision 15
2.10.6-27 ..... Revision 15
2.10.6-28 ..... Revision 15
2.10.6-29 ..... Revision 15
2.10.6-30 ..... Revision 15
2.10.6-31 ..... Revision 15
2.10.6-32 ..... Revision 15

List of Effective Pages (continued)

2.10.6-33 ..... Revision 15
2.10.6-34 ..... Revision 15
2.10.6-35 ..... Revision 15
2.10.6-36 ..... Revision 15
2.10.6-37 ..... Revision 15
2.10.6-38 ..... Revision 15
2.10.6-39 ..... Revision 15
2.10.6-40 ..... Revision 15
2.10.6-41 ..... Revision 15
2.10.6-42 ..... Revision 15

13 drawings in Sections
2.10.6.6 and 2.10.6.7

2.10.6-43 ..... Revision 15
2.10.6-44 ..... Revision 15
2.10.6-45 ..... Revision 15
2.10.6-46 ..... Revision 15
2.10.6-47 ..... Revision 15
2.10.6-48 ..... Revision 15
2.10.6-49 ..... Revision 15
2.10.6-50 ..... Revision 15
2.10.6-51 ..... Revision 15
2.10.6-52 ..... Revision 15
2.10.6-53 ..... Revision 15
2.10.6-54 ..... Revision 15
2.10.6-55 ..... Revision 15
2.10.6-56 ..... Revision 15
2.10.6-57 ..... Revision 15
2.10.6-58 ..... Revision 15
2.10.6-59 ..... Revision 15
2.10.6-60 ..... Revision 15
2.10.6-61 ..... Revision 15
2.10.6-62 ..... Revision 15
2.10.6-63 ..... Revision 15
2.10.6-64 ..... Revision 15
2.10.6-65 ..... Revision 15
2.10.6-66 ..... Revision 15
2.10.6-67 ..... Revision 15
2.10.6-68 ..... Revision 15
2.10.6-69 ..... Revision 15
2.10.6-70 ..... Revision 15
2.10.6-71 ..... Revision 15
2.10.6-72 ..... Revision 15
2.10.6-73 ..... Revision 15
2.10.6-74 ..... Revision 15
2.10.6-75 ..... Revision 15
2.10.6-76 ..... Revision 15
2.10.6-77 ..... Revision 15
2.10.6-78 ..... Revision 15
2.10.6-79 ..... Revision 15
2.10.6-80 ..... Revision 15
2.10.6-81 ..... Revision 15
2.10.6-82 ..... Revision 15
2.10.6-83 ..... Revision 15
2.10.6-84 ..... Revision 15
2.10.6-85 ..... Revision 15
2.10.6-86 ..... Revision 15
2.10.6-87 ..... Revision 15
2.10.6-88 ..... Revision 15
2.10.6-89 ..... Revision 15
2.10.6-90 ..... Revision 15
2.10.6-91 ..... Revision 15
2.10.6-92 ..... Revision 15
2.10.6-93 ..... Revision 15
2.10.6-94 ..... Revision 15
2.10.7-1 ..... Revision 15
2.10.7-2 ..... Revision 15
2.10.7-3 ..... Revision 15
2.10.7-4 ..... Revision 15

List of Effective Pages (continued)

2.10.7-5 ..... Revision 15
2.10.7-6 ..... Revision 15
2.10.7-7 ..... Revision 15
2.10.7-8 ..... Revision 15
2.10.7-9 ..... Revision 15
2.10.7-10 ..... Revision 15
2.10.7-11 ..... Revision 15
2.10.7-12 ..... Revision 15
2.10.7-13 ..... Revision 15
2.10.7-14 ..... Revision 15
2.10.7-15 ..... Revision 15
2.10.7-16 ..... Revision 15
2.10.7-17 ..... Revision 15
2.10.7-18 ..... Revision 15
2.10.7-19 ..... Revision 15
2.10.7-20 ..... Revision 15
2.10.7-21 ..... Revision 15
2.10.7-22 ..... Revision 15
2.10.7-23 ..... Revision 15
2.10.7-24 ..... Revision 15
2.10.7-25 ..... Revision 15
2.10.7-26 ..... Revision 15
2.10.8-1 ..... Revision 15
2.10.8-2 ..... Revision 15
2.10.8-3 ..... Revision 15
2.10.8-4 ..... Revision 15
2.10.8-5 ..... Revision 15
2.10.8-6 ..... Revision 15
2.10.8-7 ..... Revision 15
2.10.8-8 ..... Revision 15
2.10.8-9 ..... Revision 15
2.10.8-10 ..... Revision 15
2.10.8-11 ..... Revision 15
2.10.8-12 ..... Revision 15
2.10.8-13 ..... Revision 15
2.10.8-14 ..... Revision 15
2.10.8-15 ..... Revision 15
2.10.8-16 ..... Revision 15
2.10.8-17 ..... Revision 15
2.10.8-18 ..... Revision 15
2.10.8-19 ..... Revision 15
2.10.8-20 ..... Revision 15
2.10.8-21 ..... Revision 15
2.10.8-22 ..... Revision 15
2.10.8-23 ..... Revision 15
2.10.9-1 ..... Revision 15
2.10.9-2 ..... Revision 15
2.10.9-3 ..... Revision 15
2.10.9-4 ..... Revision 15
2.10.9-5 ..... Revision 15
2.10.9-6 ..... Revision 15
2.10.9-7 ..... Revision 15
2.10.9-8 ..... Revision 15
2.10.9-9 ..... Revision 15
2.10.9-10 ..... Revision 15
2.10.9-11 ..... Revision 15
2.10.9-12 ..... Revision 15
2.10.10-1 ..... Revision 15
2.10.10-2 ..... Revision 15
2.10.10-3 ..... Revision 15
2.10.10-4 ..... Revision 15
2.10.10-5 ..... Revision 15
2.10.10-6 ..... Revision 15
2.10.10-7 ..... Revision 15
2.10.10-8 ..... Revision 15
2.10.10-9 ..... Revision 15
2.10.10-10 ..... Revision 15
2.10.10-11 ..... Revision 15
2.10.11-1 ..... Revision 15
2.10.11-2 ..... Revision 15

List of Effective Pages (continued)

2.10.11-3 ..... Revision 15
2.10.11-4 ..... Revision 15
2.10.11-5 ..... Revision 15
2.10.11-6 ..... Revision 15
2.10.11-7 ..... Revision 15
2.10.11-8 ..... Revision 15
2.10.12-1 ..... Revision 15
2.10.12-2 ..... Revision 15
2.10.12-3 ..... Revision 15
2.10.12-4 ..... Revision 15
2.10.12-5 ..... Revision 15
2.10.12-6 ..... Revision 15
2.10.12-7 ..... Revision 15
2.10.12-8 ..... Revision 15
2.10.12-9 ..... Revision 15
2.10.12-10 ..... Revision 15
2.10.12-11 ..... Revision 15
2.10.12-12 ..... Revision 15
2.10.12-13 ..... Revision 15
2.10.12-14 ..... Revision 15
2.10.12-15 ..... Revision 15
2.10.12-16 ..... Revision 15
2.10.12-17 ..... Revision 15
2.10.12-18 ..... Revision 15
2.10.12-19 ..... Revision 15
2.10.12-20 ..... Revision 15
2.10.12-21 ..... Revision 15
2.10.12-22 ..... Revision 15
2.10.12-23 ..... Revision 15
2.10.12-24 ..... Revision 15
2.10.12-25 ..... Revision 15
2.10.12-26 ..... Revision 15
2.10.12-27 ..... Revision 15
2.10.12-28 ..... Revision 15
2.10.12-29 ..... Revision 15
2.10.12-30 ..... Revision 15
2.10.12-31 ..... Revision 15

4 drawings in Section 2.10.12

Chapter 3

3-i ..... Revision 15
3-ii ..... Revision 15
3-iii ..... Revision 15
3-iv ..... Revision 15
3-v ..... Revision 15
3-vi ..... Revision 15
3.1-1 ..... Revision STC-05A
3.1-2 ..... Revision STC-05A
3.1-3 ..... Revision 15
3.1-4 ..... Revision 15
3.1-5 ..... Revision 15
3.1-6 ..... Revision 15
3.1-7 ..... Revision 15
3.1-8 ..... Revision 15
3.1-9 ..... Revision 15
3.1-10 ..... Revision 15
3.1-11 ..... Revision 15
3.2-1 ..... Revision 15
3.2-2 ..... Revision 15
3.2-3 ..... Revision 15
3.2-4 ..... Revision 15
3.2-5 ..... Revision 15
3.2-6 ..... Revision 15
3.2-7 ..... Revision 15
3.2-8 ..... Revision 15
3.2-9 ..... Revision 15
3.2-10 ..... Revision 15
3.2-11 ..... Revision 15

List of Effective Pages (continued)

3.2-12 ..... Revision 15
3.2-13 ..... Revision 15
3.2-14 ..... Revision 15
3.3-1 ..... Revision 15
3.3-2 ..... Revision 15
3.3-3 ..... Revision 15
3.3-4 ..... Revision 15
3.3-5 ..... Revision 15
3.3-6 ..... Revision 15
3.4-1 ..... Revision 15
3.4-2 ..... Revision 15
3.4-3 ..... Revision 15
3.4-4 ..... Revision 15
3.4-5 ..... Revision 15
3.4-6 ..... Revision 15
3.4-7 ..... Revision 15
3.4-8 ..... Revision 15
3.4-9 ..... Revision 15
3.4-10 ..... Revision 15
3.4-11 ..... Revision 15
3.4-12 ..... Revision 15
3.4-13 ..... Revision 15
3.4-14 ..... Revision 15
3.4-15 ..... Revision 15
3.4-16 ..... Revision 15
3.4-17 ..... Revision 15
3.4-18 ..... Revision 15
3.4-19 ..... Revision 15
3.4-20 ..... Revision 15
3.4-21 ..... Revision 15
3.4-22 ..... Revision 15
3.4-23 ..... Revision 15
3.4-24 ..... Revision 15
3.4-25 ..... Revision 15
3.4-26 ..... Revision 15
3.4-27 ..... Revision 15
3.4-28 ..... Revision 15
3.4-29 ..... Revision 15
3.4-30 ..... Revision 15
3.4-31 ..... Revision 15
3.4-32 ..... Revision 15
3.4-33 ..... Revision 15
3.4-34 ..... Revision 15
3.4-35 ..... Revision 15
3.4-36 ..... Revision 15
3.4-37 ..... Revision 15
3.4-38 ..... Revision 15
3.4-39 ..... Revision 15
3.4-40 ..... Revision 15
3.4-41 ..... Revision 15
3.4-42 ..... Revision 15
3.4-43 ..... Revision 15
3.4-44 ..... Revision 15
3.4-45 ..... Revision 15
3.4-46 ..... Revision 15
3.4-47 ..... Revision 15
3.4-48 ..... Revision 15
3.4-49 ..... Revision 15
3.4-50 ..... Revision 15
3.4-51 ..... Revision 15
3.4-52 ..... Revision 15
3.4-53 ..... Revision 15
3.4-54 ..... Revision 15
3.4-55 ..... Revision 15
3.4-56 ..... Revision 15
3.4-57 ..... Revision 15
3.4-58 ..... Revision 15
3.4-59 ..... Revision 15
3.4-60 ..... Revision 15
3.4-61 ..... Revision 15

List of Effective Pages (continued)

3.4-62 ..... Revision 15
3.4-63 ..... Revision 15
3.4-64 ..... Revision 15
3.4-65 ..... Revision 15
3.4-66 ..... Revision 15
3.4-67 ..... Revision 15
3.4-68 ..... Revision 15
3.4-69 ..... Revision 15
3.4-70 ..... Revision 15
3.4-71 ..... Revision 15
3.4-72 ..... Revision 15
3.4-73 ..... Revision 15
3.4-74 ..... Revision 15
3.4-75 ..... Revision 15
3.4-76 ..... Revision 15
3.4-77 ..... Revision 15
3.4-78 ..... Revision 15
3.4-79 ..... Revision 15
3.4-80 ..... Revision 15
3.4-81 ..... Revision 15
3.4-82 ..... Revision 15
3.4-83 ..... Revision 15
3.4-84 ..... Revision 15
3.4-85 ..... Revision 15
3.4-86 ..... Revision 15
3.4-87 ..... Revision 15
3.4-88 ..... Revision 15
3.4-89 ..... Revision 15
3.5-1 ..... Revision 15
3.5-2 ..... Revision 15
3.5-3 ..... Revision 15
3.5-4 ..... Revision 15
3.5-5 ..... Revision 15
3.5-6 ..... Revision 15
3.5-7 ..... Revision 15
3.5-8 ..... Revision 15
3.5-9 ..... Revision 15
3.5-10 ..... Revision 15
3.5-11 ..... Revision 15
3.5-12 ..... Revision 15
3.5-13 ..... Revision 15
3.5-14 ..... Revision 15
3.5-15 ..... Revision 15
3.5-16 ..... Revision 15

Chapter 4

4-i ..... Revision 15
4-ii ..... Revision STC-05A
4.1-1 ..... Revision STC-05A
4.1-2 ..... Revision STC-05A
4.1-3 ..... Revision STC-05A
4.1-4 ..... Revision STC-05A
4.1-5 ..... Revision STC-05A
4.1-6 ..... Revision STC-05A
4.1-7 ..... Revision STC-05A
4.1-8 ..... Revision STC-05A
4.1-9 ..... Revision STC-05A
4.1-10 ..... Revision 15
4.1-11 ..... Revision 15
4.2-1 ..... Revision STC-05A
4.2-2 ..... Revision STC-05A
4.2-3 ..... Revision STC-05A
4.2-4 ..... Revision STC-05A
4.2-5 ..... Revision STC-05A
4.2-6 ..... Revision STC-05A
4.2-7 ..... Revision STC-05A
4.2-8 ..... Revision STC-05A
4.2-9 ..... Revision STC-05A
4.2-10 ..... Revision 15

List of Effective Pages (continued)

4.2-11 ..... Revision STC-05A
4.2-12 ..... Revision STC-05A
4.2-13 ..... Revision STC-05A
4.2-14 ..... Revision STC-05A
4.2-15 ..... Revision STC-05A
4.2-16 ..... Revision STC-05A
4.3-1 ..... Revision STC-05A
4.3-2 ..... Revision STC-05A
4.3-3 ..... Revision STC-05A
4.3-4 ..... Revision STC-05A
4.4-1 ..... Revision STC-05A
4.5-1 ..... Revision 15
4.5-2 ..... Revision 15
4.5-3 ..... Revision 15
4.5-4 ..... Revision 15
4.5-5 ..... Revision 15
4.5-6 ..... Revision 15
4.5-7 ..... Revision 15
4.5-8 ..... Revision 15
4.5-9 ..... Revision 15
4.5-10 ..... Revision 15
4.5-11 ..... Revision 15
4.5-12 ..... Revision 15
4.5-13 ..... Revision 15
4.5-14 ..... Revision 15
4.5-15 ..... Revision 15
4.5-16 ..... Revision 15
4.5-17 ..... Revision 15
4.5-18 ..... Revision 15
4.5-19 ..... Revision 15
4.5-20 ..... Revision 15
4.5-21 ..... Revision 15
4.5-22 ..... Revision 15
4.5-23 ..... Revision 15
4.5-24 ..... Revision 15
4.5-25 ..... Revision 15
4.5-26 ..... Revision 15
4.5-27 ..... Revision 15
4.5-28 ..... Revision 15
4.5-29 ..... Revision 15
4.5-30 ..... Revision 15
4.5-31 ..... Revision 15
4.5-32 ..... Revision 15
4.5-33 ..... Revision 15

Chapter 5

5-i ..... Revision 15
5-ii ..... Revision 15
5-iii ..... Revision 15
5-iv ..... Revision 15
5-v ..... Revision 15
5-vi ..... Revision 15
5-vii ..... Revision 15
5-viii ..... Revision 15
5-1 ..... Revision STC-05A
5-2 ..... Revision 15
5-3 ..... Revision 15
5.1-1 ..... Revision STC-05A
5.1-2 ..... Revision STC-05A
5.1-3 ..... Revision 15
5.1-4 ..... Revision 15
5.1-5 ..... Revision 15
5.1-6 ..... Revision STC-05A
5.1-7 ..... Revision STC-05A
5.1-8 ..... Revision STC-05A
5.1-9 ..... Revision 15
5.1-10 ..... Revision 15
5.1-11 ..... Revision 15
5.1-12 ..... Revision 15

List of Effective Pages (continued)

5.1-13 ..... Revision 15
5.1-14 ..... Revision 15
5.1-15 ..... Revision 15
5.1-16 ..... Revision 15
5.1-17 ..... Revision 15
5.1-18 ..... Revision 15
5.1-19 ..... Revision 15
5.1-20 ..... Revision 15
5.1-21 ..... Revision 15
5.1-22 ..... Revision 15
5.1-23 ..... Revision 15
5.1-24 ..... Revision 15
5.1-25 ..... Revision 15
5.1-26 ..... Revision 15
5.1-27 ..... Revision 15
5.1-28 ..... Revision 15
5.1-29 ..... Revision 15
5.1-30 ..... Revision 15
5.1-31 ..... Revision 15
5.2-1 ..... Revision 15
5.2-2 ..... Revision 15
5.2-3 ..... Revision 15
5.2-4 ..... Revision 15
5.2-5 ..... Revision 15
5.2-6 ..... Revision 15
5.2-7 ..... Revision 15
5.2-8 ..... Revision 15
5.2-9 ..... Revision 15
5.2-10 ..... Revision 15
5.2-11 ..... Revision 15
5.2-12 ..... Revision 15
5.2-13 ..... Revision 15
5.2-14 ..... Revision 15
5.2-15 ..... Revision 15
5.2-16 ..... Revision 15
5.2-17 ..... Revision 15
5.2-18 ..... Revision 15
5.2-19 ..... Revision 15
5.2-20 ..... Revision 15
5.2-21 ..... Revision 15
5.2-22 ..... Revision 15
5.2-23 ..... Revision 15
5.2-24 ..... Revision 15
5.2-25 ..... Revision 15
5.2-26 ..... Revision 15
5.2-27 ..... Revision 15
5.2-28 ..... Revision 15
5.2-29 ..... Revision 15
5.2-30 ..... Revision 15
5.2-31 ..... Revision 15
5.2-32 ..... Revision 15
5.2-33 ..... Revision 15
5.2-34 ..... Revision 15
5.2-35 ..... Revision 15
5.2-36 ..... Revision 15
5.2-37 ..... Revision 15
5.2-38 ..... Revision 15
5.2-39 ..... Revision 15
5.3-1 ..... Revision 15
5.3-2 ..... Revision 15
5.3-3 ..... Revision 15
5.3-4 ..... Revision 15
5.3-5 ..... Revision 15
5.3-6 ..... Revision 15
5.3-7 ..... Revision 15
5.3-8 ..... Revision 15
5.3-9 ..... Revision 15
5.3-10 ..... Revision 15
5.3-11 ..... Revision 15
5.3-12 ..... Revision 15

List of Effective Pages (continued)

5.3-13 ..... Revision 15
5.3-14 ..... Revision 15
5.3-15 ..... Revision 15
5.3-16 ..... Revision 15
5.3-17 ..... Revision 15
5.3-18 ..... Revision 15
5.3-19 ..... Revision 15
5.3-20 ..... Revision 15
5.3-21 ..... Revision 15
5.3-22 ..... Revision 15
5.3-23 ..... Revision 15
5.3-24 ..... Revision 15
5.3-25 ..... Revision 15
5.3-26 ..... Revision 15
5.3-27 ..... Revision 15
5.3-28 ..... Revision 15
5.3-29 ..... Revision 15
5.3-30 ..... Revision 15
5.3-31 ..... Revision 15
5.3-32 ..... Revision 15
5.4-1 ..... Revision 15
5.4-2 ..... Revision 15
5.4-3 ..... Revision 15
5.4-4 ..... Revision 15
5.4-5 ..... Revision 15
5.4-6 ..... Revision 15
5.4-7 ..... Revision 15
5.4-8 ..... Revision 15
5.4-9 ..... Revision 15
5.4-10 ..... Revision 15
5.4-11 ..... Revision 15
5.4-12 ..... Revision 15
5.4-13 ..... Revision 15
5.4-14 ..... Revision 15
5.4-15 ..... Revision 15
5.4-16 ..... Revision 15
5.4-17 ..... Revision 15
5.4-18 ..... Revision 15
5.4-19 ..... Revision 15
5.4-20 ..... Revision 15
5.4-21 ..... Revision 15
5.4-22 ..... Revision 15
5.4-23 ..... Revision 15
5.4-24 ..... Revision 15
5.4-25 ..... Revision 15
5.4-26 ..... Revision 15
5.4-27 ..... Revision 15
5.4-28 ..... Revision 15
5.4-29 ..... Revision 15
5.4-30 ..... Revision 15
5.4-31 ..... Revision 15
5.4-32 ..... Revision 15
5.4-33 ..... Revision 15
5.4-34 ..... Revision 15
5.4-35 ..... Revision 15
5.4-36 ..... Revision 15
5.4-37 ..... Revision 15
5.4-38 ..... Revision 15
5.4-39 ..... Revision 15
5.4-40 ..... Revision 15
5.5-1 ..... Revision 15
5.5-2 ..... Revision 15
5.5-3 ..... Revision 15
5.5-4 ..... Revision 15
5.5-5 ..... Revision 15
5.5-6 ..... Revision 15
5.5-7 ..... Revision 15
5.5-8 ..... Revision 15
5.5-9 ..... Revision 15
5.5-10 ..... Revision 15

List of Effective Pages (continued)

5.5-11 ..... Revision 15
5.5-12 ..... Revision 15
5.5-13 ..... Revision 15
5.5-14 ..... Revision 15
5.5-15 ..... Revision 15
5.5-16 ..... Revision 15
5.5-17 ..... Revision 15
5.5-18 ..... Revision 15
5.5-19 ..... Revision 15
5.5-20 ..... Revision 15
5.5-21 ..... Revision 15
5.5-22 ..... Revision 15
5.5-23 ..... Revision 15
5.5-24 ..... Revision 15
5.5-25 ..... Revision 15
5.5-26 ..... Revision 15
5.5-27 ..... Revision 15
5.5-28 ..... Revision 15
5.5-29 ..... Revision 15
5.5-30 ..... Revision 15
5.5-31 ..... Revision 15
5.5-32 ..... Revision 15
5.5-33 ..... Revision 15
5.5-34 ..... Revision 15
5.5-35 ..... Revision 15
5.5-36 ..... Revision 15
5.5-37 ..... Revision 15
5.5-38 ..... Revision 15
5.5-39 ..... Revision 15
5.5-40 ..... Revision 15
5.5-41 ..... Revision 15
5.5-42 ..... Revision 15
5.5-43 ..... Revision 15
5.5-44 ..... Revision 15
5.5-45 ..... Revision 15
5.5-46 ..... Revision 15
5.5-47 ..... Revision 15
5.5-48 ..... Revision 15
5.5-49 ..... Revision 15
5.5-50 ..... Revision 15
5.5-51 ..... Revision 15
5.5-52 ..... Revision 15
5.5-53 ..... Revision 15
5.5-54 ..... Revision 15
5.5-55 ..... Revision 15
5.5-56 ..... Revision 15
5.5-57 ..... Revision 15
5.5-58 ..... Revision 15
5.5-59 ..... Revision 15
5.5-60 ..... Revision 15

Chapter 6

6-i ..... Revision 15
6-ii ..... Revision 15
6-iii ..... Revision 15
6-iv ..... Revision 15
6-v ..... Revision 15
6-vi ..... Revision 15
6.1-1 ..... Revision STC-05A
6.1-2 ..... Revision STC-05A
6.1-3 ..... Revision STC-05A
6.1-4 ..... Revision STC-05A
6.1-5 ..... Revision STC-05A
6.1-6 ..... Revision STC-05A
6.2-1 ..... Revision 15
6.2-2 ..... Revision 15
6.2-3 ..... Revision 15
6.2-4 ..... Revision 15
6.2-5 ..... Revision 15

List of Effective Pages (continued)

6.2-6 ..... Revision 15
6.2-7 ..... Revision 15
6.2-8 ..... Revision 15
6.2-9 ..... Revision 15
6.2-10 ..... Revision 15
6.2-11 ..... Revision 15
6.3-1 ..... Revision 15
6.3-2 ..... Revision 15
6.3-3 ..... Revision 15
6.3-4 ..... Revision 15
6.3-5 ..... Revision 15
6.3-6 ..... Revision 15
6.3-7 ..... Revision 15
6.3-8 ..... Revision 15
6.3-9 ..... Revision 15
6.3-10 ..... Revision 15
6.4-1 ..... Revision STC-05A
6.4-2 ..... Revision STC-05A
6.4.1-1 ..... Revision 15
6.4.2-1 ..... Revision 15
6.4.2-2 ..... Revision 15
6.4.2-3 ..... Revision 15
6.4.2-4 ..... Revision 15
6.4.2-5 ..... Revision 15
6.4.2-6 ..... Revision 15
6.4.2-7 ..... Revision 15
6.4.2-8 ..... Revision 15
6.4.2-9 ..... Revision 15
6.4.3-1 ..... Revision 15
6.4.3-2 ..... Revision 15
6.4.3-3 ..... Revision 15
6.4.3-4 ..... Revision 15
6.4.3-5 ..... Revision 15
6.4.3-6 ..... Revision 15
6.4.3-7 ..... Revision 15
6.4.3-8 ..... Revision 15
6.4.3-9 ..... Revision 15
6.4.3-10 ..... Revision 15
6.4.3-11 ..... Revision 15
6.4.3-12 ..... Revision 15
6.4.3-13 ..... Revision 15
6.4.3-14 ..... Revision 15
6.4.3-15 ..... Revision 15
6.4.3-16 ..... Revision 15
6.4.3-17 ..... Revision 15
6.4.3-18 ..... Revision 15
6.4.3-19 ..... Revision 15
6.4.3-20 ..... Revision 15
6.4.3-21 ..... Revision 15
6.4.3-22 ..... Revision 15
6.4.3-23 ..... Revision 15
6.4.3-24 ..... Revision 15
6.4.3-25 ..... Revision 15
6.4.3-26 ..... Revision 15
6.4.3-27 ..... Revision 15
6.4.3-28 ..... Revision 15
6.4.3-29 ..... Revision 15
6.4.4-1 ..... Revision 15
6.4.4-2 ..... Revision 15
6.4.4-3 ..... Revision 15
6.4.4-4 ..... Revision 15
6.4.4-5 ..... Revision 15
6.4.4-6 ..... Revision 15
6.4.4-7 ..... Revision 15
6.4.4-8 ..... Revision 15
6.4.4-9 ..... Revision 15
6.4.4-10 ..... Revision 15
6.4.4-11 ..... Revision 15
6.4.4-12 ..... Revision 15
6.4.4-13 ..... Revision 15

List of Effective Pages (continued)

6.4.4-14 ..... Revision 15
6.4.4-15 ..... Revision 15
6.4.4-16 ..... Revision 15
6.4.4-17 ..... Revision 15
6.4.4-18 ..... Revision 15
6.4.4-19 ..... Revision 15
6.4.4-20 ..... Revision 15
6.4.4-21 ..... Revision 15
6.4.4-22 ..... Revision 15
6.4.4-23 ..... Revision 15
6.4.4-24 ..... Revision 15
6.4.4-25 ..... Revision 15
6.4.4-26 ..... Revision 15
6.4.4-27 ..... Revision 15
6.4.4-28 ..... Revision 15
6.4.4-29 ..... Revision 15
6.4.4-30 ..... Revision 15
6.5-1 ..... Revision 15
6.5-2 ..... Revision 15
6.5.1-1 ..... Revision 15
6.5.1-2 ..... Revision 15
6.5.1-3 ..... Revision 15
6.5.1-4 ..... Revision 15
6.5.1-5 ..... Revision 15
6.5.1-6 ..... Revision 15
6.5.1-7 ..... Revision 15
6.5.1-8 ..... Revision 15
6.5.1-9 ..... Revision 15
6.5.1-10 ..... Revision 15
6.5.1-11 ..... Revision 15
6.5.1-12 ..... Revision 15
6.5.1-13 ..... Revision 15
6.5.1-14 ..... Revision 15
6.5.1-15 ..... Revision 15
6.5.1-16 ..... Revision 15
6.5.1-17 ..... Revision 15
6.5.1-18 ..... Revision 15
6.5.1-19 ..... Revision 15
6.5.1-20 ..... Revision 15
6.5.1-21 ..... Revision 15
6.5.2-1 ..... Revision 15
6.5.2-2 ..... Revision 15
6.5.2-3 ..... Revision 15
6.5.2-4 ..... Revision 15
6.5.2-5 ..... Revision 15
6.5.2-6 ..... Revision 15
6.5.2-7 ..... Revision 15
6.5.2-8 ..... Revision 15
6.5.2-9 ..... Revision 15
6.5.2-10 ..... Revision 15
6.5.2-11 ..... Revision 15
6.5.2-12 ..... Revision 15
6.5.2-13 ..... Revision 15
6.5.2-14 ..... Revision 15
6.5.2-15 ..... Revision 15
6.5.2-16 ..... Revision 15
6.5.2-17 ..... Revision 15
6.5.2-18 ..... Revision 15
6.5.2-19 ..... Revision 15
6.5.2-20 ..... Revision 15
6.6-1 ..... Revision STC-05A
6.6-2 ..... Revision 15
6.7-1 ..... Revision 15
6.7-2 ..... Revision 15
6.7-3 ..... Revision 15
6.7-4 ..... Revision 15
6.7-5 ..... Revision 15
6.7-6 ..... Revision 15
6.7-7 ..... Revision 15
6.7-8 ..... Revision 15

List of Effective Pages (continued)

6.7-9 ..... Revision 15
6.7-10 ..... Revision 15
6.7-11 ..... Revision 15
6.7-12 ..... Revision 15
6.7-13 ..... Revision 15
6.7-14 ..... Revision 15
6.7-15 ..... Revision 15
6.7-16 ..... Revision 15
6.7-17 ..... Revision 15
6.7-18 ..... Revision 15
6.7-19 ..... Revision 15
6.7-20 ..... Revision 15
6.7-21 ..... Revision 15
6.7-22 ..... Revision 15
6.7-23 ..... Revision 15
6.7-24 ..... Revision 15
6.7-25 ..... Revision 15
6.7-26 ..... Revision 15
6.7-27 ..... Revision 15
6.7-28 ..... Revision 15
6.7-29 ..... Revision 15
6.7-30 ..... Revision 15
6.7-31 ..... Revision 15
6.7-32 ..... Revision 15
6.7-33 ..... Revision 15
6.7-34 ..... Revision 15
6.7-35 ..... Revision 15
6.7-36 ..... Revision 15
6.7-37 ..... Revision 15
6.7-38 ..... Revision 15
6.7-39 ..... Revision 15
6.7-40 ..... Revision 15
6.7-41 ..... Revision 15
6.7-42 ..... Revision 15
6.7-43 ..... Revision 15
6.7-44 ..... Revision 15
6.7-45 ..... Revision 15
6.7-46 ..... Revision 15
6.7-47 ..... Revision 15
6.7-48 ..... Revision 15
6.7-49 ..... Revision 15
6.7-50 ..... Revision 15
6.7-51 ..... Revision 15
6.7-52 ..... Revision 15
6.7-53 ..... Revision 15
6.7-54 ..... Revision 15
6.7-55 ..... Revision 15
6.7-56 ..... Revision 15
6.7-57 ..... Revision 15
6.7-58 ..... Revision 15
6.7-59 ..... Revision 15
6.7-60 ..... Revision 15
6.7-61 ..... Revision 15
6.7-62 ..... Revision 15
6.7-63 ..... Revision 15
6.7-64 ..... Revision 15
6.7-65 ..... Revision 15
6.7-66 ..... Revision 15
6.7-67 ..... Revision 15
6.7-68 ..... Revision 15
6.7-69 ..... Revision 15
6.7-70 ..... Revision 15
6.7-71 ..... Revision 15
6.7-72 ..... Revision 15
6.7-73 ..... Revision 15
6.7-74 ..... Revision 15
6.7-75 ..... Revision 15
6.7-76 ..... Revision 15
6.7-77 ..... Revision 15
6.7-78 ..... Revision 15

List of Effective Pages (continued)

6.7-79 ..... Revision 15
6.7-80 ..... Revision 15
6.7-81 ..... Revision 15
6.7-82 ..... Revision 15
6.7-83 ..... Revision 15
6.7-84 ..... Revision 15
6.7-85 ..... Revision 15
6.7-86 ..... Revision 15
6.7-87 ..... Revision 15
6.7-88 ..... Revision 15
6.7-89 ..... Revision 15
6.7-90 ..... Revision 15
6.7-91 ..... Revision 15
6.7-92 ..... Revision 15
6.7-93 ..... Revision 15
6.7-94 ..... Revision 15
6.7-95 ..... Revision 15
6.7-96 ..... Revision 15
6.7-97 ..... Revision 15
6.7-98 ..... Revision 15
6.7-99 ..... Revision 15
6.7-100 ..... Revision 15
6.7-101 ..... Revision 15
6.7-102 ..... Revision 15
6.7-103 ..... Revision 15
6.7-104 ..... Revision 15
6.7-105 ..... Revision 15
6.7-106 ..... Revision 15
6.7-107 ..... Revision 15
6.7-108 ..... Revision 15
6.7-109 ..... Revision 15
6.7-110 ..... Revision 15
6.7-111 ..... Revision 15
6.7-112 ..... Revision 15
6.7-113 ..... Revision 15
6.7-114 ..... Revision 15
6.7-115 ..... Revision 15
6.7-116 ..... Revision 15
6.7-117 ..... Revision 15
6.7-118 ..... Revision 15
6.7-119 ..... Revision 15
6.7-120 ..... Revision 15
6.7-121 ..... Revision 15
6.7-122 ..... Revision 15
6.7-123 ..... Revision 15
6.7-124 ..... Revision 15
6.7-125 ..... Revision 15
6.7-126 ..... Revision 15
6.7-127 ..... Revision 15
6.7-128 ..... Revision 15
6.7-129 ..... Revision 15
6.7-130 ..... Revision 15
6.7-131 ..... Revision 15
6.7-132 ..... Revision 15
6.7-133 ..... Revision 15
6.7-134 ..... Revision 15
6.7-135 ..... Revision 15
6.7-136 ..... Revision 15
6.7-137 ..... Revision 15
6.7-138 ..... Revision 15
6.7-139 ..... Revision 15
6.7-140 ..... Revision 15
6.7-141 ..... Revision 15
6.7-142 ..... Revision 15
6.7-143 ..... Revision 15
6.7-144 ..... Revision 15
6.7-145 ..... Revision 15
6.7-146 ..... Revision 15
6.7-147 ..... Revision 15
6.7-148 ..... Revision 15

List of Effective Pages (continued)

6.7-149 ..... Revision 15
6.7-150 ..... Revision 15
6.7-151 ..... Revision 15
6.7-152 ..... Revision 15
6.7-153 ..... Revision 15
6.7-154 ..... Revision 15
6.7-155 ..... Revision 15
6.7-156 ..... Revision 15
6.7-157 ..... Revision 15
6.7-158 ..... Revision 15
6.7-159 ..... Revision 15
6.7-160 ..... Revision 15
6.7-161 ..... Revision 15
6.7-162 ..... Revision 15
6.7-163 ..... Revision 15
6.7-164 ..... Revision 15
6.7-165 ..... Revision 15
6.7-166 ..... Revision 15
6.7-167 ..... Revision 15
6.7-168 ..... Revision 15
6.7-169 ..... Revision 15
6.7-170 ..... Revision 15
6.7-171 ..... Revision 15
6.7-172 ..... Revision 15
6.7-173 ..... Revision 15
6.7-174 ..... Revision 15
6.7-175 ..... Revision 15
6.7-176 ..... Revision 15
6.7-177 ..... Revision 15
6.7-178 ..... Revision 15
6.7-179 ..... Revision 15
6.7-180 ..... Revision 15
6.7-181 ..... Revision 15
6.7-182 ..... Revision 15
6.7-183 ..... Revision 15
6.7-184 ..... Revision 15
6.7-185 ..... Revision 15
6.7-186 ..... Revision 15
6.7-187 ..... Revision 15
6.7-188 ..... Revision 15
6.7-189 ..... Revision 15
6.7-190 ..... Revision 15
6.7-191 ..... Revision 15
6.7-192 ..... Revision 15
6.7-193 ..... Revision 15
6.7-194 ..... Revision 15
6.7-195 ..... Revision 15
6.7-196 ..... Revision 15
6.7-197 ..... Revision 15
6.7-198 ..... Revision 15
6.7-199 ..... Revision 15
6.7-200 ..... Revision 15
6.7-201 ..... Revision 15
6.7-202 ..... Revision 15
6.7-203 ..... Revision 15
6.7-204 ..... Revision 15
6.7-205 ..... Revision 15
6.7-206 ..... Revision 15
6.7-207 ..... Revision 15
6.7-208 ..... Revision 15
6.7-209 ..... Revision 15
6.7-210 ..... Revision 15
6.7-211 ..... Revision 15
6.7-212 ..... Revision 15
6.7-213 ..... Revision 15
6.7-214 ..... Revision 15
6.7-215 ..... Revision 15
6.7-216 ..... Revision 15
6.7-217 ..... Revision 15
6.7-218 ..... Revision 15

List of Effective Pages (continued)

6.7-219 ..... Revision 15
6.7-220 ..... Revision 15
6.7-221 ..... Revision 15
6.7-222 ..... Revision 15
6.7-223 ..... Revision 15
6.7-224 ..... Revision 15
6.7-225 ..... Revision 15
6.7-226 ..... Revision 15
6.7-227 ..... Revision 15
6.7-228 ..... Revision 15
6.7-229 ..... Revision 15
6.7-230 ..... Revision 15
6.7-231 ..... Revision 15
6.7-232 ..... Revision 15
6.7-233 ..... Revision 15
6.7-234 ..... Revision 15
6.7-235 ..... Revision 15
6.7-236 ..... Revision 15
6.7-237 ..... Revision 15
6.7-238 ..... Revision 15
6.7-239 ..... Revision 15
6.7-240 ..... Revision 15
6.7-241 ..... Revision 15
6.7-242 ..... Revision 15
6.7-243 ..... Revision 15
6.7-244 ..... Revision 15
6.7-245 ..... Revision 15
6.7-246 ..... Revision 15
6.7-247 ..... Revision 15
6.7-248 ..... Revision 15
6.7-249 ..... Revision 15
6.7-250 ..... Revision 15
6.7-251 ..... Revision 15
6.7-252 ..... Revision 15
6.7-253 ..... Revision 15
6.7-254 ..... Revision 15
6.7-255 ..... Revision 15
6.7-256 ..... Revision 15
6.7-257 ..... Revision 15
6.7-258 ..... Revision 15
6.7-259 ..... Revision 15
6.7-260 ..... Revision 15
6.7-261 ..... Revision 15
6.7-262 ..... Revision 15
6.7-263 ..... Revision 15
6.7-264 ..... Revision 15
6.7-265 ..... Revision 15
6.7-266 ..... Revision 15
6.7-267 ..... Revision 15
6.7-268 ..... Revision 15
6.7-269 ..... Revision 15
6.7-270 ..... Revision 15
6.7-271 ..... Revision 15
6.7-272 ..... Revision 15
6.7-273 ..... Revision 15
6.7-274 ..... Revision 15
6.7-275 ..... Revision 15
6.7-276 ..... Revision 15
6.7-277 ..... Revision 15
6.7-278 ..... Revision 15
6.7-279 ..... Revision 15
6.7-280 ..... Revision 15
6.7-281 ..... Revision 15
6.7-282 ..... Revision 15
6.7-283 ..... Revision 15
6.7-284 ..... Revision 15
6.7-285 ..... Revision 15
6.7-286 ..... Revision 15
6.7-287 ..... Revision 15
6.7-288 ..... Revision 15

List of Effective Pages (continued)

6.7-289 ..... Revision 15
6.7-290 ..... Revision 15
6.7-291 ..... Revision 15
6.7-292 ..... Revision 15
6.7-293 ..... Revision 15
6.7-294 ..... Revision 15
6.7-295 ..... Revision 15
6.7-296 ..... Revision 15
6.7-297 ..... Revision 15
6.7-298 ..... Revision 15
6.7-299 ..... Revision 15
6.7-300 ..... Revision 15
6.7-301 ..... Revision 15
6.7-302 ..... Revision 15
6.7-303 ..... Revision 15
6.7-304 ..... Revision 15
6.7-305 ..... Revision 15
6.7-306 ..... Revision 15
6.7-307 ..... Revision 15
6.7-308 ..... Revision 15
6.7-309 ..... Revision 15
6.7-310 ..... Revision 15
6.7-311 ..... Revision 15
6.7-312 ..... Revision 15
6.7-313 ..... Revision 15
6.7-314 ..... Revision 15
6.7-315 ..... Revision 15
6.7-316 ..... Revision 15
6.7-317 ..... Revision 15
6.7-318 ..... Revision 15
6.7-319 ..... Revision 15
6.7-320 ..... Revision 15
6.7-321 ..... Revision 15
6.7-322 ..... Revision 15
6.7-323 ..... Revision 15
6.7-324 ..... Revision 15
6.7-325 ..... Revision 15
6.7-326 ..... Revision 15
6.7-327 ..... Revision 15
6.7-328 ..... Revision 15
6.7-329 ..... Revision 15
6.7-330 ..... Revision 15
6.7-331 ..... Revision 15
6.7-332 ..... Revision 15
6.7-333 ..... Revision 15

Chapter 7

7-i ..... Revision 15
7-ii ..... Revision STC-05A
7-1 ..... Revision STC-05A
7-2 ..... Revision STC-05A
7-3 ..... Revision 15
7.1-1 ..... Revision STC-05A
7.1-2 ..... Revision 15
7.1-3 ..... Revision 15
7.1-4 ..... Revision 15
7.1-5 ..... Revision STC-05A
7.1-6 ..... Revision STC-05A
7.1-7 ..... Revision STC-05A
7.1-8 ..... Revision STC-05A
7.1-9 ..... Revision STC-05A
7.1-10 ..... Revision STC-05A
7.1-11 ..... Revision STC-05A
7.1-12 ..... Revision STC-05A
7.2-1 ..... Revision STC-05A
7.2-2 ..... Revision STC-05A
7.2-3 ..... Revision STC-05A
7.2-4 ..... Revision STC-05A
7.2-5 ..... Revision STC-05A

List of Effective Pages (continued)

7.3-1 ..... Revision STC-05A
7.3-2 ..... Revision STC-05A
7.3-3 ..... Revision STC-05A
7.3-4 ..... Revision STC-05A
7.3-5 ..... Revision STC-05A
7.3-6 ..... Revision STC-05A
7.3-7 ..... Revision STC-05A
7.3-8 ..... Revision STC-05A
7.3-9 ..... Revision STC-05A
7.4-1 ..... Revision STC-05A
7.4-2 ..... Revision STC-05A
7.4-3 ..... Revision STC-05A
7.4-4 ..... Revision STC-05A
7.5-1 ..... Revision 15
7.6-1 ..... Revision 15
7.6-2 ..... Revision STC-05A
7.6-3 ..... Revision STC-05A
7.6-4 ..... Revision 15

Chapter 8

8-i ..... Revision 15
8-ii ..... Revision 15
8-1 ..... Revision STC-05A
8.1-1 ..... Revision 15
8.1-2 ..... Revision 15
8.1-3 ..... Revision 15
8.1-4 ..... Revision 15
8.1-5 ..... Revision 15
8.1-6 ..... Revision STC-05A
8.1-7 ..... Revision STC-05A
8.1-8 ..... Revision STC-05A
8.1-9 ..... Revision 15
8.1-10 ..... Revision 15
8.1-11 ..... Revision 15
8.1-12 ..... Revision 15
8.1-13 ..... Revision 15
8.1-14 ..... Revision 15
8.1-15 ..... Revision 15
8.1-16 ..... Revision 15
8.1-17 ..... Revision STC-05A
8.1-18 ..... Revision STC-05A
8.1-19 ..... Revision STC-05A
8.1-20 ..... Revision STC-05A
8.1-21 ..... Revision 15
8.2-1 ..... Revision 15
8.2-2 ..... Revision STC-05A
8.2-3 ..... Revision STC-05A
8.2-4 ..... Revision 15
8.2-5 ..... Revision 15
8.2-6 ..... Revision 15
8.2-7 ..... Revision 15
8.2-8 ..... Revision STC-05A
8.3-1 ..... Revision 15
8.4-1 ..... Revision 15
8.4-2 ..... Revision 15
8.4-3 ..... Revision 15
8.4-4 ..... Revision 15
8.4-5 ..... Revision 15
8.4-6 ..... Revision 15
8.4-7 ..... Revision 15
8.4-8 ..... Revision 15
8.4-9 ..... Revision 15

Chapter 9

9-i ..... Revision 15
9-1 ..... Revision 15
9-2 ..... Revision 15
9-3 ..... Revision 15

List of Effective Pages (continued)

9-4 ..... Revision 15
9-5 ..... Revision 15
9-6 ..... Revision 15
9-7 ..... Revision 15
9-8 ..... Revision 15
9-9 ..... Revision 15
9-10 ..... Revision 15
9-11 ..... Revision 15
9-12 ..... Revision 15
9-13 ..... Revision 15

THIS PAGE INTENTIONALLY LEFT BLANK

Chapter 1

List of Drawings

423-800, sheets 1-3	Rev 14	Cask Assembly – NAC-STC Cask
423-802, sheets 1-7	Rev 20	Cask Body – NAC-STC Cask
423-803, sheets 1-2	Rev 8	Lid Assembly – Inner, NAC-STC Cask
423-804, sheets 1-3	Rev 8	Details - Inner Lid, NAC-STC Cask
423-805, sheets 1-2	Rev 6	Lid Assembly – Outer, NAC-STC Cask
423-806	Rev 7	Port Coverplate Assy – Inner Lid, NAC-STC Cask
423-807, sheets 1-3	Rev 3	Assembly, Port Cover, NAC-STC Cask
423-209	Rev 0	Impact Limiter Assy – Upper, NAC-STC Cask
423-210	Rev 0	Impact Limiter Assy – Lower, NAC-STC Cask
423-257	Rev 2	Balsa Impact Limiter, Upper, NAC-STC Cask
423-258	Rev 2	Balsa Impact Limiter, Lower, NAC-STC Cask
423-811, sheets 1-2	Rev 11	Details – NAC-STC Cask
423-812	Rev 6	Nameplates – NAC-STC Cask
423-843	Rev 2	Transport Assembly, Balsa Impact Limiters, NAC-STC
423-859	Rev 0	Attachment Hardware, Balsa Limiters, NAC-STC
423-870	Rev 5	Fuel Basket Assembly, PWR, 26 Element, NAC-STC Cask
423-871	Rev 5	Bottom Weldment, Fuel Basket, PWR, 26 Element, NAC-STC Cask
423-872	Rev 6	Top Weldment, Fuel Basket, PWR, 26 Element, NAC-STC Cask
423-873	Rev 2	Support Disk and Misc. Basket Details, PWR, 26 Element, NAC-STC Cask
423-874	Rev 2	Heat Transfer Disk, Fuel Basket, PWR, 26 Element, NAC-STC Cask
423-875, sheets 1-2	Rev 7	Tube, NAC-STC Cask
423-900	Rev 6	Package Assembly Transportation, NAC-STC Cask
423-901	Rev 2	Transportation Package Concept, NAC-STC Cask
455-800, sheets 1-2	Rev 2	Assembly, Transport Cask, MPC-Yankee
455-801, sheets 1-2	Rev 3	Assembly, Transport Cask, NAC-MPC
455-820, sheets 1-2	Rev 2	Spacers, Transport Cask, MPC-Yankee

List of Drawings (Continued)

455-870	Rev 5	Canister Shell, MPC-Yankee
455-871, sheets 1-2	Rev 8	Details, Canister, MPC-Yankee
455-871, sheets 1-3	Rev 7P2	Details, Canister, MPC-Yankee
455-872, sheets 1-2	Rev 12	Assembly, Transportable Storage Canister (TSC), MPC-Yankee
455-872, sheets 1-2	Rev 11P1	Assembly, Transportable Storage Canister (TSC), MPC-Yankee
455-873	Rev 4	Assembly, Drain Tube, Canister, MPC-Yankee
455-881, sheets 1-3	Rev 8	PWR Fuel Tube, MPC-Yankee
455-887, sheets 1-3	Rev 4	Basket Assembly, 24 GTCC Container, MPC-Yankee
455-888, sheets 1-2	Rev 8	Assembly, Transportable Storage Canister (TSC), 24 GTCC Container, MPC-Yankee
455-891, sheets 1-2	Rev 1	Bottom Weldment, Fuel Basket, MPC-Yankee
455-891, sheets 1-3	Rev 2P0	Bottom Weldment, Fuel Basket, MPC-Yankee
455-892, sheets 1-2	Rev 3	Top Weldment, Fuel Basket, MPC-Yankee
455-892, sheets 1-3	Rev 3P0	Top Weldment, Fuel Basket, MPC-Yankee
455-893	Rev 3	Support Disk and Misc. Basket Details, MPC-Yankee
455-894	Rev 2	Heat Transfer Disk, Fuel Basket, MPC-Yankee
455-895, sheets 1-2	Rev 5	Fuel Basket Assembly, MPC-Yankee
455-895, sheets 1-2	Rev 5P0	Fuel Basket Assembly, MPC-Yankee
455-919	Rev 2	Retainer, United Nuclear Test Assy, MPC-Yankee
414-801, sheets 1-2	Rev 1	Cask Assembly, NAC-STC, CY-MPC
414-820	Rev 0	Canister Spacer CY-MPC
414-870	Rev 3	Canister Shell, CY-MPC
414-871, sheets 1-2	Rev 6	Details, Canister CY-MPC
414-872, sheets 1-3	Rev 6	Assembly, Transportable Storage Canister (TSC), CY-MPC
414-873	Rev 2	Drain Tube Assembly, CY-MPC
414-874	Rev 0	Shim, Canister, CY-MPC
414-875	Rev 0	Spacer Shim, Canister, CY-MPC
414-881, sheets 1-2	Rev 4	Fuel Tube, Transportable Storage Canister (TSC), CY-MPC
414-882, sheets 1-2	Rev 4	Oversize Fuel Tube, Transportable Storage Canister (TSC), CY-MPC
414-887, sheets 1-4	Rev 4	Basket Assembly, GTCC, CY-MPC
414-888, sheets 1-2	Rev 4	Canister Shell, GTCC, CY-MPC

List of Drawings (Continued)

414-889, sheets 1-3	Rev 7	Assembly, Transportable Storage Canister (TSC), GTCC, CY-MPC
414-891	Rev 3	Bottom Weldment, Fuel Basket CY-MPC
414-892, sheets 1-3	Rev 3	Top Weldment Fuel Basket CY-MPC
414-893, sheets 1-2	Rev 2	Support Di sk and Misc. Basket Details CY-MPC
414-894	Rev 0	Heat Transfer Disk, Fuel Basket CY-MPC
414-895, sheets 1-2	Rev 4	Fuel Basket Assembly CY-MPC
Yankee-Class Reconfigured Fuel Assembly		
YR-00-060	Rev D3	Yankee-Class Reconfigured Fuel Assembly
YR-00-061	Rev D4	Yankee-Class Reconfigured Fuel Assembly Shell Weldment
YR-00-062, Sheet 1	Rev D4	Yankee-Class Reconfigured Fuel Assembly Top End Fitting Assembly
YR-00-062, Sheet 2	Rev D2	Yankee-Class Reconfigured Fuel Assembly Top End Plate
YR-00-062, Sheet 3	Rev D1	Yankee-Class Reconfigured Fuel Assembly Top End Template
YR-00-063	Rev D4	Yankee-Class Reconfigured Fuel Assembly Bottom End Fitting Assy.
YR-00-064	RevD4	Yankee-Class Reconfigured Fuel Assembly Nozzle Bolt and Alignment Pin
YR-00-065	Rev D2	Yankee-Class Reconfigured Fuel Assembly Fuel Basket Assembly
YR-00-066, Sheet 1	Rev D5	Yankee-Class Reconfigured Fuel Assembly Fuel Tube Assembly
YR-00-066, Sheet 2	Rev D3	Yankee-Class Reconfigured Fuel Assembly Fuel Tube Assembly
Yankee Rowe Damaged Fuel Can		
455-901	Rev 0P0	Can Assembly, Damaged Fuel, MPC-Yankee
455-902, sheets 1-5	Rev 0P4	Can Details, Damaged Fuel, MPC-Yankee
Connecticut Yankee Damaged Fuel Can		
414-901	Rev 1	Assembly, Damaged Fuel Can, CY-MPC
414-902, sheets 1-3	Rev 3	Details, Damaged Fuel Can, CY-MPC
Connecticut Yankee Reconfigured Fuel Assembly		
414-903, sheets 1-2	Rev 1	Reconfigured Fuel Assembly, CY- MPC
414-904, sheets 1-3	Rev 0	Details, Reconfigured Fuel Assembly, CY- MPC

THIS PAGE INTENTIONALLY LEFT BLANK

1.0 GENERAL INFORMATION

NAC International (NAC) has designed a Storable Transport Cask (NAC-STC) for spent nuclear fuel. The United States Nuclear Regulatory Commission (NRC) licenses the NAC-STC for the transport of spent nuclear fuel. This Safety Analysis Report (SAR) addresses the ability of the NAC-STC to satisfy the NRC transportation requirements for spent fuel, either directly loaded in the cask (uncanistered) or in a canister, and Greater Than Class C (GTCC) waste in a Transportable Storage Canister, as prescribed in 10 CFR 71.

The Transportable Storage Canister is a component of the NAC-MPC dry storage system. The NAC-MPC is provided in two configurations. The first is designed to store Yankee Class spent fuel and GTCC waste and is referred to as the Yankee-MPC. The second is designed to store Connecticut Yankee spent fuel and GTCC waste and is referred to as the CY-MPC.

This chapter presents a general introduction to the transport cask and a description of its design features. The terminology used throughout this report is summarized in Table 1-1.

The NAC-STC may be shipped by rail, barge, or heavy-haul vehicle. The NAC-STC is assigned a Transport Index (TI) of 21 based on the shielding evaluation summarized in Section 5.1.4. As shown in Chapter 6, the Criticality Safety Index (CSI) is zero, since an infinite number of packages with optimum moderation remain subcritical.

The NAC-STC has been designed to satisfy the international requirements of the International Atomic Energy Agency (IAEA), in addition to U.S. requirements prescribed in 10 CFR 71.

Table 1-1 Terminology

Balsa Impact Limiter	A device constructed primarily of balsa wood with limited use of redwood. This device is designed to dissipate energy during normal and accident conditions impact events for packages weighing up to 260,000 lb. The balsa impact limiter is 128 inches in diameter with balsa wood providing primary protection during end and corner impact events and redwood for side impact events.
Cask Model	NAC-STC
NAC-STC Cask	This packaging consists of a spent-fuel storable transport cask body with dual closure lids and energy-absorbing impact limiters.
Packaging	The assembly of components necessary to ensure compliance with the packaging requirements of 10 CFR 71. Within this report, the packaging is denoted as the NAC-STC.
Package	The packaging with its radioactive contents (payload), as presented for transport (10 CFR 71.4). Within this report, the package is denoted as the NAC-STC, the NAC-STC cask or, simply, the cask.
Contents (Payload)	Twenty-six (26) pressurized water reactor (PWR) fuel assemblies in the directly loaded fuel (uncanistered) configuration or a sealed Transportable Storage Canister containing Yankee Class or Connecticut Yankee spent fuel or Greater Than Class C waste.
Containment System	The components of the packaging intended to retain the radioactive material during transport.
Cask Body	
- Multiwall Body	Construction of the cask body, which consists of concentric layers of the inner shell, gamma shielding, outer shell and neutron shielding materials.
- Neutron Shield	Consists of the stainless steel shell, gussets, and end plates, copper-stainless steel (Cu/SS) fins, and the solid NS-4-FR neutron shielding material.

Table 1-1 Terminology (continued)

Yankee-MPC Contents	Up to 36 intact Yankee Class pressurized-water reactor (PWR) spent fuel assemblies, Reconfigured Fuel Assemblies, and Recaged Fuel Assemblies. Up to four fuel assemblies may be loaded in Damaged Fuel Cans. The maximum total contents weight in the Transportable Storage Canister is 30,600 pounds, not including the weight of the Damaged Fuel Cans, which are defined to be components of the fuel basket.
CY-MPC Contents	Up to 26 Connecticut Yankee PWR spent fuel assemblies (including fuel inserts), CY-MPC Reconfigured Fuel Assemblies and CY-MPC Damaged Fuel Cans containing Connecticut Yankee intact or damaged fuel to a maximum total contents weight of 35,100 pounds.
Yankee Class Spent Fuel	Fuel that includes United Nuclear Type A and Type B, Combustion Engineering Type A and Type B, Exxon-ANF Type A and Type B, Westinghouse Type A and Type B and failed fuel cages that are bound by the above fuel types.
Connecticut Yankee Spent Fuel	15 x 15 PWR fuel assemblies manufactured by Westinghouse, Gulf Nuclear/Gulf General Atomic, NUMEC and Babcock and Wilcox.
Connecticut Yankee Fuel Inserts	Reactor Control Cluster Assemblies, flow mixers or stainless steel rods that may be inserted in, and stored with, the Connecticut Yankee spent fuel.
Yankee-MPC Recaged Fuel Assembly	A Yankee Class Combustion Engineering fuel assembly lattice (skeleton) holding United Nuclear fuel rods with no empty fuel rod positions.

Table 1-1 Terminology (continued)

Reconfigured Fuel Assembly	A stainless steel container having approximately the same external dimensions as a standard spent fuel assembly that ensures criticality control geometry and permits gaseous and liquid media to escape while preventing dispersal of gross particulates. The reconfigured fuel assembly may contain intact fuel rods, damaged fuel rods and fuel debris from any type of Yankee Class or Connecticut Yankee spent fuel assembly.
CY-MPC Damaged Fuel Can	A stainless steel container that confines a damaged Connecticut Yankee spent fuel assembly, which allows gaseous and liquid media to escape but minimizes the dispersal of gross particulate. Connecticut Yankee damaged fuel assemblies must be loaded in the CY-MPC damaged fuel can. The damaged fuel can may also hold an Intact Fuel Assembly, a Lattice or a Failed Rod Storage Canister.
Yankee-MPC Damaged Fuel Can	A stainless steel container that is similar to an enlarged fuel tube and that confines a Yankee Class Intact Fuel Assembly, Damaged Fuel Assembly, Recaged Fuel Assembly or a Reconfigured Fuel Assembly. A damaged fuel can is closed on its end by screened openings that allow gaseous and liquid media to escape, but minimize the dispersal of gross particulate. Use of the damaged fuel can requires that four cans be used in the canister in conjunction with a special shield lid machined to accept the cans.
Fuel Rod Retainer	A retainer used for the Gulf United Nuclear Fuel (GUNF) lead test assemblies to retain the removable fuel rods within the fuel assembly during normal and accident conditions of transport.

Table 1-1 Terminology (continued)

Intact Fuel Assembly	A fuel assembly without known or suspected cladding defects greater than pinhole leaks or hairline cracks. Connecticut Yankee fuel assemblies with missing fuel rods, or with missing fuel rods replaced with solid filler rods, or with structural damage, are considered intact fuel assemblies, provided that they have no damaged fuel rods. Yankee Class fuel assemblies with missing fuel rods replaced with Zircaloy or stainless steel rods, or with structural damage, are considered intact fuel assemblies provided that they have no damaged fuel rods.
Intact Fuel Rod	A fuel rod without known or suspected cladding defects greater than pinhole leaks or hairline cracks.
Damaged Fuel Assembly	A fuel assembly containing at least one damaged fuel rod with a known or suspected cladding defect greater than a hairline crack or a pinhole leak, or an assembly that cannot be handled by normal means, or both. Yankee Class fuel assemblies containing up to 20 fuel rod positions that are either missing or that are holding individual fuel rods classified as damaged.
Damaged Fuel Rod	A fuel rod with known or suspected cladding defects greater than pinhole leaks or hairline cracks.
Fuel Debris	Fuel in the form of particles, loose pellets and fragmented rods or assemblies.
Greater Than Class C Waste (GTCC)	Irradiated and surface contaminated metal, usually stainless steel, whose disposal is controlled by 10 CFR 61 due to the presence of very long-lived isotopes, including ^{59}Ni, ^{94}Nb and ^{14}C. This waste results from reactor decommissioning.

Table 1-1 Terminology (continued)

Personnel Barrier	An expanded metal screen with appropriate support structure that is installed between the impact limiters and covers the cask during transport. The expanded metal screen, and its support structure, are aluminum. The personnel barrier precludes incidental contact with the cask surface, which may be at elevated temperature compared to the rail car.
Lattice	A fuel assembly structure that is used to hold up to 204 Intact Fuel Rods or Damaged Fuel Rods from other fuel assemblies. A Lattice is sometimes called a fuel skeleton, cage or structural cage. It is built from the same components as a standard fuel assembly, but some of those components may be modified slightly, such as relaxed grids, to accommodate the distortion that may be present in a Damaged Fuel Rod. The outside dimensions are identical to a standard fuel assembly.
Failed Rod Storage Canister	A handling container for moving up to 60 individual intact or damaged fuel rods in stainless steel tubes into a CY-MPC Damaged Fuel Can. The steel tubes are held in place by regularly spaced plates welded in an open stainless steel frame. The failed rod storage canister, which is closed at the top end by a bolted closure and at the bottom by a welded plate to capture the fuel rods in the tubes, must be loaded in a CY-MPC Damaged Fuel Can.
Redwood Impact Limiter	A device constructed primarily of redwood with limited use of balsa wood. This device is designed to dissipate energy during normal and accident conditions impact events for packages weighing up to 250,000 lb. The redwood impact limiter is 124 inches in diameter with redwood providing primary protection during end and side impact events and balsa wood for corner impact events.

1.1 Introduction

The NAC-STC is designed to safely transport spent fuel assemblies in two configurations and Greater Than Class C (GTCC) waste in a canistered configuration. The fuel assemblies may be placed directly into a fuel basket installed in the cask cavity (uncanistered) or sealed in a transportable storage canister (canistered).

The design basis spent fuels for the uncanistered (directly loaded) configuration are the Westinghouse 17×17 or 15×15 PWR fuel assemblies and Framatome-Cogema 17×17 PWR fuel assemblies. These fuels bound smaller array Westinghouse and similar Babcock & Wilcox and Combustion Engineering PWR fuel assemblies.

There are two canistered fuel configurations. The first is designed to store up to 36 intact Yankee Class spent fuel and reconfigured fuel assemblies and is referred to as the Yankee-MPC. The second is designed to store up to 26 Connecticut Yankee fuel assemblies, reconfigured fuel assemblies and damaged fuel in CY-MPC damaged fuel cans, and is referred to as the CY-MPC.

Yankee Class fuel includes United Nuclear, Combustion Engineering, Exxon-ANF, and Westinghouse Type A and Type B fuel designs. The Type A and Type B fuel designs are complementary configurations that accommodate the use of a cruciform control blade in reactor operations.

Connecticut Yankee spent fuel includes 15 x 15 PWR fuel assemblies having a square cross-section. The fuel specifications that serve as the design basis for the CY-MPC are presented in Section 1.2.3. The Connecticut Yankee fuel consists of fuel assemblies manufactured by Westinghouse, Gulf Nuclear/Gulf General Atomic, NUMEC and Babcock & Wilcox.

The canister configurations also accommodate GTCC waste. The Yankee-MPC and CY-MPC canister and GTCC basket accommodate up to 24 fuel assembly sized containers of GTCC waste. The GTCC canister designs have the same external dimensions as the respective spent fuel canisters, but have different basket designs.

The NAC-STC, when loaded, has a maximum design weight of 260,000 pounds. The NAC-STC provides a radioactive material containment boundary for maximum safety during the handling

and transport operations required for spent-fuel shipment. The general configuration of the NAC-STC and the major cask dimensions are shown in Figure 1.1-1.

The NAC-STC cask may be transported after loading with or without a period of interim storage. The structural components of the transport containment boundary are the:

(1) Inner shell center section and upper and lower inner shell rings (transition sections);
(2) Bottom inner forging; and,
(3) Top forging.

The closure components of the containment boundary for transport without interim storage after loading are the:

(1) Inner lid and inner lid O-ring;
(2) Vent port coverplate and the coverplate inner O-ring; and,
(3) Drain port coverplate and the coverplate inner O-ring.

As described in the following sections, the O-rings may be either metallic or nonmetallic.

The closure components of the containment boundary for transport after an extended period of storage are the:

(1) Inner lid and inner lid outer metallic O-ring;
(2) Inner lid interseal test port threaded plug with metallic O-ring;
(3) Vent port coverplate and the coverplate outer metallic O-ring;
(4) Vent port coverplate interseal test hole threaded plug with metallic O-ring;
(5) Drain port coverplate and the coverplate outer metallic O-ring; and,
(6) Drain port coverplate interseal test hole threaded plug with metallic O-ring.

Metallic O-rings are required for the storage configuration and are qualified for transport prior to shipment in accordance with the operating procedure.

The NAC-STC is designed to meet 10 CFR 71 and IAEA Safety Series No. TS-R-1 licensing requirements for spent fuel transport packages. The transport licensing requirements include providing safe containment during the handling and transport of spent nuclear fuel. Certain design features of the NAC-STC that have been included for the sole purpose of satisfying

storage licensing requirements also provide added safety for transport conditions. The design features of the NAC-STC include: inner and outer lids, redundant seals at each containment boundary penetration, cavity penetrations located in the inner lid, and a puncture-resistant outer shell and outer lid.

This Safety Analysis Report is written for transport cask licensing only. Design features related to storage cask licensing are included for clarity and for ease of review.

The NAC-STC closure design provides dual lids for transport and storage operations, as well as protection of the vent and drain ports that are located in the inner lid. This design permits performance of a periodic verification leak test on the containment seals prior to transport following extended storage. Both the inner and outer lids are installed during transport and storage.

The inner lid and its O-rings are the major removable components in the primary containment boundary. Two concentric O-rings are used to seal the inner lid to the cask cavity flange. An O-ring test port connects to the annulus between the two O-rings to permit leak testing.

The vent and drain port coverplates, which protect the vent and drain ports located in the inner lid, are also part of the primary containment boundary of the cask. Each coverplate is sealed by two concentric O-rings.

As described in Section 4.1, the inner O-rings of the inner lid and two coverplates are the containment boundary for contents (either directly loaded fuel or a loaded transportable storage canister) that is loaded for transport without interim site storage. The outer O-rings of these components are the containment boundary for directly loaded fuel that is to be transported after an extended period of storage.

The inner lid and coverplate O-rings may be either metallic or non-metallic as shown in the License Drawings. However, metallic O-rings must be used when the NAC-STC is directly loaded for long-term storage or for the transport of canistered contents. The metallic O-rings provide long-term sealing capability in an elevated temperature and radiation environment.

The outer lid provides a sealed secondary closure for transport and storage operations using a single O-ring. The O-ring may be either metallic or non-metallic. The outer lid protects the inner lid and the vent and drain ports from external puncture events.

There are two penetrations in the top forging: an interlid port, which serves primarily as a drain for the interlid region, and a pressure port, which may house a transducer that monitors the pressure in the interlid region during storage. During transport, the pressure port is closed by a threaded plug. The pressure port plug is covered by the transport port coverplate. The interlid and pressure port penetrations in the top forging are protected by SA-705, Type 630, 17-4 precipitation-hardened (PH) stainless steel port covers with two piston-type blended polytetrafluoroethylene (PTFE) O-rings.

The body of the NAC-STC is a smooth right-circular cylinder of multiwall construction, consisting of stainless steel inner and outer shells separated by lead gamma radiation shielding, which is poured in place. The center section of the inner shell is fabricated from Type 304 stainless steel. At each end of the inner shell center section, inner shell rings fabricated from Type XM-19 stainless steel provide the transition to the bottom inner forging and the top forging. The outer shell is also fabricated from Type 304 stainless steel. The inner and outer shells are welded to the Type 304 stainless steel top forging, which is a ring that is machined to mate with the inner and outer lids. The inner and outer shells are also welded to the Type 304 stainless steel bottom inner and outer forgings, respectively. The cask bottom consists of the two forgings and a plate with neutron shield material sandwiched between the bottom inner forging and the bottom plate. Neutron shield material is also placed in an annulus that surrounds the cask outer shell along the length of the cask cavity. The neutron shielding material is a solid synthetic polymer (NS-4-FR). The neutron shield annulus is enclosed by a Type 304 stainless steel shell and by end plates that are welded to the outer shell. Two pressure relief valves are provided in the bottom of the neutron shield annulus to relieve pressure in the neutron shield annulus due to a severe thermal accident condition (fire). Neutron shielding is also provided on the top of the cask by a layer of NS-4-FR enclosed in the inner lid.

Redundant lifting capability for the NAC-STC is provided by four lifting trunnions welded to the top forging at 90-degree intervals. Rotation trunnion recesses are located on the outer shell near

The CY-MPC Failed Rod Storage Canister, shown in Figure 1.2-6, is similar in design to the CY-MPC Reconfigured Fuel Assembly but holds only a maximum of 60 fuel rods classified as failed in stainless steel tubes.

Some of the Connecticut Yankee fuel assemblies will be stored with flow mixers, reactor control cluster assemblies (RCCA) or stainless steel rods installed. Flow mixers are thimble plug assemblies used during reactor operation to maintain equal coolant flow in fuel assemblies that do not contain a reactor control cluster. Reactor control clusters were used to control the reactivity of the Connecticut Yankee reactor during operations and shutdown. Some Connecticut Yankee fuel assemblies may have missing fuel rods and/or may have solid filler rods replacing the missing fuel rods.

A maximum of two assemblies with up to two irradiated stainless steel filler rods per assembly may be loaded in the CY-MPC canister. These assemblies may only be loaded in the two central basket positions.

Two impact limiter designs consisting of a combination of redwood and balsa wood, encased in Type 304 stainless steel, are provided to limit the g-loads acting on the cask during a drop accident load condition. The g-loads are limited by the crush strength of the wood contained in the impact limiters. The predominately balsa wood impact limiter (the balsa impact limiter) is designed for use with all the proposed contents. The predominately redwood impact limiters (the redwood impact limiter) may only be used with directly loaded fuel or the Yankee-MPC configurations.

Any number of NAC-STCs may be shipped at one time, with each cask on its own railcar. The NAC-STC may also be shipped in any number on board ships, barges, or special heavy-haul vehicles.

FIGURE WITHHELD UNDER 10 CFR 2.390

alignment of the outer lid. Four lifting trunnions are welded to the top forging to permit cask lifting and handling with either a redundant or a nonredundant lifting yoke.

Radial gamma radiation shielding for the NAC-STC is provided by the inner shell, the outer shell, and the 3.7-inch thickness of American Society of Testing Materials (ASTM) B29 chemical copper lead located in the annulus between the inner and outer shells. The lead also serves as an elastic support for the outer shell during a puncture event and for the inner shell during a side impact event.

Radial neutron shielding for the NAC-STC is provided by NS-4-FR, which is a solid synthetic polymer originally developed by BISCO Products, Inc. and is now supplied by the Japan Atomic Power Company and its licensees. This solid neutron shielding material is selected to eliminate leakage and maintenance problems and to alleviate other concerns attendant with using a liquid neutron shield. NS-4-FR has a high-hydrogen content to provide for neutron attenuation, is doped with boron to minimize the number of secondary gammas generated, is stable at elevated temperature service, and is fire retardant. A 5.5-inch-thick layer of NS-4-FR is installed in the annulus formed by the outer shell, the 0.250-inch-thick neutron shield shell, and the 0.472-inch (12 mm) thick neutron shield end plates.

The inner shell, inner shell rings, top forging, bottom inner forging, and the inner lid establish a cask cavity that is 165.0 inches long and 71.0 inches in diameter.

The calculated weight of the cask body is 175,970 pounds. The overall length of the cask body is 193.0 inches, and the maximum outside diameter is 99.1 inches across the corners of the neutron shield shell.

1.2.1.2.2 Inner Lid and Bolts

The inner lid and its O-rings are the principal installed components of the NAC-STC containment boundary. The O-rings may be either metallic or nonmetallic, depending on cask use. The inner lid is 9.0 inches thick, 79.0 inches in diameter, and is fabricated from Type 304 stainless steel. The top portion of the inner lid is a 2.0-inch-thick, 67.5-inch-diameter layer of NS-4-FR neutron shielding material enclosed by a 1.0-inch-thick, Type 304 stainless steel coverplate that is welded in place. The 42 inner lid bolts are 1 1/2 - 8 UN socket head cap screws fabricated from SB-637, Grade N07718 nickel alloy steel bolt material. This bolt material has a

coefficient of thermal expansion that is very similar to that of the Type 304 stainless steel inner lid and top forging and, thus, alleviates differential thermal expansion effects.

The inner lid is recessed to a depth of 11.8 inches into the top forging to provide clearance for the outer lid. The inner lid bolt holes are located on a ledge machined into the inner lid, so that the bolt heads are below the top surface of the lid. The top surface of the inner lid has threaded holes for the attachment of a lid-lifting device. The bottom of the inner lid is sealed to the top forging of the cask body by two O-rings. The O-rings may be either metallic or nonmetallic, depending on the cask use. Metallic O-rings are used for storage and for transport following storage. Either metallic or nonmetallic O-rings may be used for transport of directly loaded fuel without interim storage after loading. The outer metallic O-ring provides the primary containment seal for transport after storage, while the inner O-ring (either metallic or nonmetallic) provides the primary containment seal for transport without interim storage after loading. An interseal test port is provided and is equipped with a 1/4-inch quick-disconnect valved nipple to allow leak testing of the inner lid O-rings. The interseal test port plug is part of the containment boundary for transport after a period of storage. As shown on Drawing 423-804, the O-ring grooves on the underside of the inner lid are either square to accommodate metallic O-rings or have a truncated triangular shape to accommodate nonmetallic O-rings.

Three ports are recessed into the inner lid: the vent port, the drain port, and the interseal test port. These ports are described in Section 1.2.1.2.4.

1.2.1.2.3 Outer Lid and Bolts

The outer lid, bolts and O-ring, when bolted to the top forging, provide a sealed secondary closure. The outer lid is 5.25 inches thick in the central region, 86.7 inches in diameter, and is fabricated from SA-705, Type 630, H1150, 17-4 PH stainless steel. The 36 outer lid bolts are 1-8 UNC socket head cap screws fabricated from SA-564, Type 630, H1150, 17-4 PH stainless steel. The bolt material is identical to that of the outer lid, alleviating any differential thermal expansion effects.

The outer lid is bolted to the top forging of the NAC-STC. The lid bolt holes are countersunk into the lid so that the bolt heads are below the top surface of the lid. The bottom surface of the outer lid is sealed to the top forging by one O-ring, which is replaced prior to transport. The O-ring may be either metallic or nonmetallic. The interlid port, located in the top forging, is

1.2.1.2.5 Lifting Trunnions and Rotation Trunnion Recesses

The NAC-STC has four lifting trunnions that are fabricated from SA-705, Type 630, H1150, 17-4 PH stainless steel and are welded into 2.0-inch deep recesses in the top forging at 90-degree intervals around the cask circumference. Only two diametrically opposite lifting trunnions are required to lift the NAC-STC. The lifting trunnions are 5.5 inches in diameter and have a load-bearing width of 2.5 inches. The trunnions are machined to create a 0.38-inch thick end flange, which acts as a safety stop to ensure proper engagement and to prevent inadvertent disengagement of the lifting yoke.

There are two rotation trunnion recesses located near the bottom end of the NAC-STC. The rotation trunnion recesses are located approximately 18 inches above the bottom of the cask in line with two of the lifting trunnion, but 3.0 inches offset from the cask centerline to ensure that rotation of the cask occurs in the proper direction. Each recess is fabricated from SA-705, Type 630, 17-4 PH stainless steel and is groove-welded to the bottom outer forging. The recess is 6.0 inches square and 4.13 inches deep, with a full radius at the top of the recess that engages with the rotation support. The neutron shield shell is cut out to accommodate the rotation trunnion recesses.

1.2.1.2.6 Transport Impact Limiters

The NAC-STC is equipped with removable, cup-shaped impact limiters that are bolted over each end of the cask to ensure that the design impact loads for the cask are not exceeded for any of the defined normal operation or accident drop conditions. The NAC-STC transport impact limiters are provided in two configurations. The standard configuration is constructed of a combination of redwood and balsa wood and is referred to as the redwood impact limiter. The other configuration is constructed using only balsa wood and is referred to as the balsa impact limiter. Both configurations are completely enclosed in a stainless steel shell. The upper impact limiter has cutouts in its inside diameter for clearance with the lifting trunnions. The impact limiters absorb the energy of a cask drop by crushing the redwood and/or balsa wood. The force required to crush the impact limiter is determined by the amount and location of the wood and its grain direction. The upper and lower impact limiters are bolted over each end of the cask body by 16 equally spaced attachment rods and nuts. The lightweight impact limiters have a lower weight and improved crush characteristics compared to the standard impact limiters, and accommodate a higher cask content weight and higher cask total weight. As shown in Section

1.2.1.1, the lightweight impact limiters must be used in the transport of the CY-MPC canister configurations. Either impact limiter design may be used with the directly loaded fuel or Yankee-MPC configurations. The two impact limiter configurations are similar in size and shape. The redwood impact limiters have a total weight of 17,730 pounds. The total weight of the balsa impact limiters is 11,423 pounds.

1.2.1.2.7 Directly Loaded Fuel Basket

The NAC-STC has one directly loaded fuel basket configuration and three (3) canistered fuel basket configurations. The canistered fuel basket configurations are described in Section 1.2.1.2.8. The directly loaded basket and the canistered baskets are constructed of stainless steel with aluminum heat transfer disks and are of similar design.

The directly loaded fuel basket design is a right-circular cylinder configuration with square fuel tubes laterally supported by a series of support disks, which are retained by square spacer nuts on threaded rods at six locations. The nuts are torqued at installation to provide a solid load path in compression between the support disks. The support disks are 0.5-inch thick, 70.86-inch diameter 17-4 PH stainless steel disks spaced 4.87 inches center-to-center with square holes for the fuel tubes. The top end weldment and the bottom end weldment are fabricated from Type 304 stainless steel, are geometrically similar to the support disks, and are 1.0-inch thick. The threaded rods have a 1-5/8 – 8 UN thread diameter and are fabricated from Type 17-4 PH stainless steel. The nuts are 2.5-inch square bars that are also fabricated from Type 17-4 PH stainless steel. The fuel tubes are fabricated from Type 304 stainless steel and provide support for the encased neutron absorber sheet on each of the four sides. The neutron absorber provides criticality control in the basket. No structural credit is taken for the stainless steel tubes as a contributor to the total structural strength of the basket and support of the fuel assemblies.

The NAC-STC directly loaded fuel basket accommodates 26 PWR fuel assemblies in an aligned configuration in 8.78-inch inside dimension square fuel tubes, which have 0.142-inch thick walls. The fuel tubes are supported in the basket assembly between the top and bottom weldment plates. The hole in the top weldment is 8.75 inches square. The hole in the bottom weldment is 8.65 inch square. The basket design traps the fuel tube between the top and bottom weldment preventing axial movement of the fuel tube. The minimum width of the support disk webs between the fuel tubes is 1.5 inches, but two webs have a width of 3.3 inches.

additional one inch of stainless steel shielding at the bottom in the axial direction of the cask. A detailed description of the NAC-STC shielding design, as well as the shielding analysis, is provided in Chapter 5.

1.2.1.6 Protrusions

There are no outer protrusions on the NAC-STC other than the four external lifting trunnions that are welded to the top forging near the upper end of the cask. The lifting trunnions are within the envelope protected by the impact limiters. The inner lid and all of the port covers are recessed into the cask body and do not protrude above the cask surface. The outer lid forms a smooth surface with its recessed bolts.

1.2.2 Operational Features

The NAC-STC is designed for ease of operation. The cask is designed to be easily loaded, unloaded, and handled at a nuclear facility. The configuration and surface finish of the cask exterior surfaces have been designed to facilitate and minimize cask decontamination efforts. The inner lid, the outer lid, and the port covers are all one-piece components designed to reduce handling times and to maintain personnel dose rates as low as reasonably achievable (ALARA). Quick-disconnect fittings are provided in the vent and drain ports, the inner lid interseal test port and in the interlid port for improved handling operations. All operational features are shown on the license drawings provided in Section 1.3.2. An operational schematic for the NAC-STC is shown in Figure 1.2-1. Operating procedures are provided in Chapter 7 for both canistered and directly loaded (uncanistered) fuel operations.

1.2.3 Contents of Packaging

Shipments in the NAC-STC shall not exceed the following limits:

1. The maximum content weight of the NAC-STC shall not exceed 67,200 pounds in the CY-MPC configuration and 56,000 pounds in the Yankee-MPC and directly loaded configurations.
2. The limits specified in Tables 1.2-2 through 1.2-4 for the design basis fuels shall not be exceeded.

3. The total decay heat of the cavity contents shall not exceed 22.1 kilowatts for directly loaded fuel, 12.5 kilowatts for Yankee Class canistered fuel and 17 kilowatts for Connecticut Yankee canistered fuel.

4. The total weight of the Zircaloy and/or stainless steel clad fuel assemblies shall not exceed 30,600 pounds in the Yankee-MPC, 35,100 pounds in the CY-MPC and 39,000 pounds for directly loaded fuel.

5. The total weight of the Yankee-MPC and CY-MPC GTCC canistered waste shall not exceed 12,340 pounds and 18,742 pounds, respectively.

6. Any number of NAC-STC casks may be shipped at one time on a railcar, a ship, a barge, or a heavy-haul vehicle.

7. Radiation levels shall not exceed the requirements of 10 CFR 71.47, 10 CFR 71.51, and IAEA Safety Standard Series No. TS-R-1, Common Provision B3.

8. Surface contamination levels shall not exceed the requirements of 10 CFR 71.87(i)(1) and IAEA Safety Standard Series No. TS-R-1, Common Provision B4.

1.2.3.1 Design Basis Spent Fuel

The NAC-STC is designed to safely transport spent fuel assemblies in two configurations. The fuel assemblies may be directly loaded into a fuel basket installed in the cask cavity (uncanistered) or sealed in a transportable storage canister (canistered). The design basis fuel assemblies for the uncanistered configuration are the Framatome-Cogema 17×17 and Westinghouse 17×17 or 15×15 PWR fuel assemblies. These assemblies bound smaller array Westinghouse, and similar Babcock & Wilcox, and Combustion Engineering PWR fuel assemblies. The NAC-STC can transport 26 directly loaded PWR fuel assemblies.

The key parameters of the design basis directly loaded spent fuel assemblies are provided in Table 1.2-2.

In the Yankee-MPC configuration, the NAC-STC can transport up to 36 Yankee Class fuel assemblies, including Yankee-MPC Reconfigured Fuel Assemblies and recaged fuel assemblies, including four intact or damaged fuel assemblies or Reconfigured Fuel Assemblies loaded in Yankee-MPC damaged fuel cans (four are required due to shield lid configuration). Any intact spent fuel assembly with fuel rods removed shall have each of the empty fuel rod positions filled

with a solid rod fabricated from Zircaloy or stainless steel. Damaged fuel assemblies may contain empty positions provided the combined number of damaged rods and empty positions does not exceed 20 in any single assembly. The key parameters of the design basis Yankee-MPC spent fuel assemblies are provided in Table 1.2-3. The maximum and minimum enrichments shown in Table 1.2-3 are nominal values for the manufacturer and type of fuel assembly shown. Certain fuel assemblies of the same manufacturer and type have enrichment values nominally above or below these values due to the method by which enrichment tolerances were applied during fabrications. The effects of these minor variations are considered in Section 5.4.1.2 and 6.4.3.1 and are shown to be not significant. The NAC-STC can also transport up to 24 containers of Yankee Class GTCC waste.

In the CY-MPC configuration, the NAC-STC can transport up to 26 Connecticut Yankee fuel assemblies, including CY-MPC Reconfigured Fuel Assemblies and CY-MPC Damaged Fuel Cans. CY-MPC Reconfigured Fuel Assemblies and Damaged Fuel Cans must be loaded in one of the four "oversize fuel" loading positions in the CY-MPC fuel basket. The NAC-STC can also transport up to 24 containers of Connecticut Yankee GTCC waste.

Solid stainless steel rods, approximately 21 inches long, may be inserted into Connecticut Yankee intact and damaged fuel assembly RCCA guide tubes not containing a RCCA. The stainless steel rods are intended to displace the water from the lower end of the RCCA guide tubes during draining of the canister. The height of the first drainage hole of the RCCA guide tube is over 21 inches from the bottom of the tube. The 20 RCCA guide tubes per assembly could retain significant amounts of water. This water would be required to be removed by vacuum drying. The small diameter of the RCCA guide tubes, the height of water in the tube, and the minimal decay heat in the location of the tubes would make removal of the water by the vacuum drying process extremely difficult. The rods will be installed in the assemblies prior to loading the assemblies into the canister.

1.2.3.2 Greater Than Class C Waste

Greater Than Class C (GTCC) waste is defined in 10 CFR 61.55(a)(3) and (4) by the concentration of long-lived radionuclides, i.e., ^{14}C, ^{59}Ni, and ^{94}Nb, and/or short-lived radionuclides, i.e., ^{3}H, ^{60}Co, and ^{63}Ni. The disposal of GTCC waste is controlled by 10 CFR 61.

GTCC waste consists of radiation activated and surface contaminated steel, and/or plasma cutting debris (dross). Stainless steel core baffle structure, which is located adjacent to the reactor vessel in a high neutron flux field, is the major component of GTCC waste.

Yankee Class GTCC Waste

The principal Yankee Class GTCC waste consists of the segmented core baffle structure, but it includes miscellaneous hardware consisting of sectioned source vanes and sectioned fuel assembly cage guide tubes, grid straps and end fittings. The core baffle structure is plasma cut underwater into pieces of a size that are loaded into containers that have the same external dimensions as a "Yankee Class" fuel assembly. Dross (fines and debris) is generated by the underwater plasma cutting of the core baffle structure. The dross is solid particulate debris, varying in size from approximately 8 microns to over 850 microns and having a density approximately 24 percent lower than the parent material. The dross material does not generate, nor release, radioactive gases.

Dross material is collected from the spent fuel pool in buckets, in metallic sock filters, or by vacuuming and is discharged directly into a GTCC container. No credit is taken for the sock filters in retaining the dross material. The GTCC containers have an 80 micron screen held between perforated plates in the top and bottom end fittings. Based on an experimental study of plasma cutting debris particle size, the 80 micron screen in the GTCC containers retains in excess of 95 percent of the dross material. Up to 24 GTCC containers, having a total weight of 12,340 pounds, can be placed in the GTCC basket/canister. The reference volume for the design basis GTCC is 43,147 inches^3.

A portion of the GTCC waste consists of three sectioned fuel assembly cage components (guide tubes, grid straps and end fittings) and four sectioned source vanes. This material is primarily stainless steel, inconel and Zircaloy activated by exposure in the reactor core. The fuel assembly cage material and source vanes are inserted directly in to one of the interior loading positions of the GTCC canister. Debris from the fuel assembly sectioning operation is captured in filters that are placed in a GTCC container to preclude dispersal.

The principal isotopic constituents of typical Yankee Class GTCC waste are presented in Table 1.2-5. The radionuclide composition of the waste was determined based on radiochemical assay of samples and dose rate measurements of the waste containers. The isotopes that primarily contribute to the radiological source term are ^{54}Mn, ^{55}Fe, ^{60}Co, and ^{63}Ni. The source terms applied in the evaluation of the GTCC waste are presented in Section 5.2.

Any contents, such as residual water or filter media, that are subject to the production of radiolytically generated combustible gases will be limited so that the quantity of any individual combustible gas will not exceed 4% by volume within any volume of a canister containing GTCC waste. A determination of the combustible gas generation within a sealed canister will be made prior to transport to demonstrate that the 4% limit will not be exceeded from the time the canister is sealed through a period equal to twice the expected shipment duration. Furthermore, the GTCC waste will be evaluated prior to loading to ensure that none of the activated material or filter media contents produce chemical or galvanic corrosion reactions with the stainless steel canister.

Table 1.2-5 provides the inventory of radionuclides in the core baffle and dross material.

Connecticut Yankee GTCC Waste

The Connecticut Yankee GTCC waste consists of sections of the core baffle, core barrel, core support plate and miscellaneous related hardware associated with these components. The major components were hydrolaser cut underwater into pieces of a size that are loaded into containers that have the same external dimensions as a Connecticut Yankee fuel assembly. Any dross material (fines and debris) generated by the cutting operations will be disposed of as low level radioactive waste.

The GTCC containers have 80 micron perforated plates that screen the drain holes in the top and bottom end fittings to allow water draining and vacuum drying. Up to 24 GTCC containers, having a total weight of 18,742 pounds, can be placed in the GTCC basket/canister. The maximum weight of a single loaded GTCC container is 1,210 pounds.

The principal isotopic constituents of the Connecticut Yankee GTCC waste, resulting from activation and surface contamination, are presented in Table 1.2-6. The radionuclide composition of the waste was determined based on radiochemical assay of samples and dose rate measurements of the waste containers. The isotopes that primarily contribute to the radiological source term are ^{54}Mn, ^{55}Fe, ^{60}Co, and ^{63}Ni. The source terms applied in the evaluation of the GTCC waste are presented in Section 5.2.

The GTCC waste is solid and the waste containers have screened openings in the top and bottom that permit water draining and vacuum drying. Consequently, no hydrogen generation as a result of residual water occurs.

Figure 1.2-1 Operational Schematic for the NAC-STC

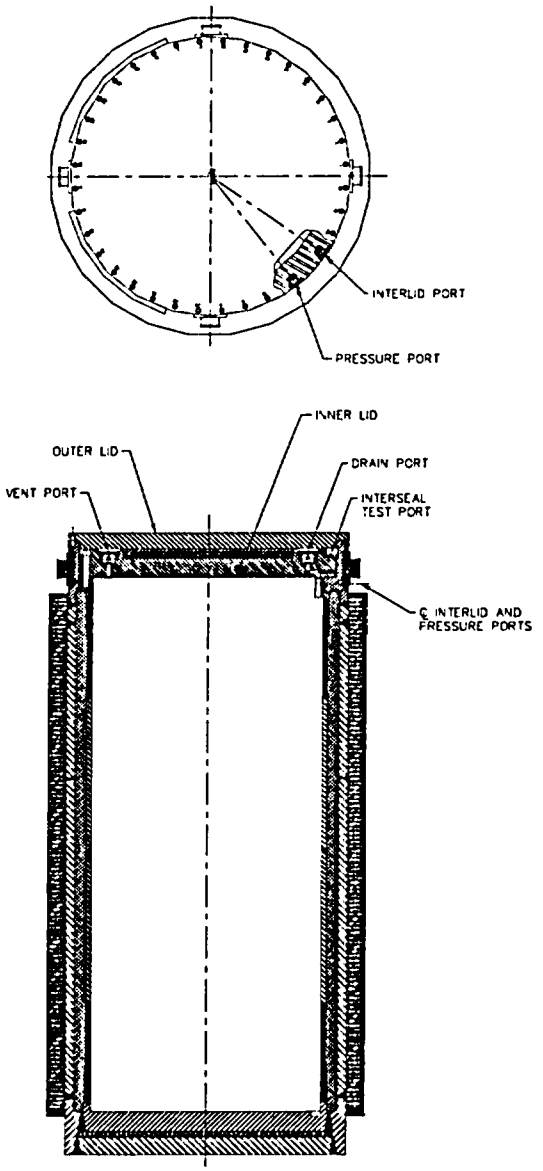

Table 1.2-3 NAC-STC Design Basis Yankee Class Fuel Characteristics

Parameter	Yankee Class Fuel[1,2]				
	United Nuclear Type A	Combustion[3] Type A	Westinghouse Type B	Exxon Type A	Yankee RFA
Maximum Number of Assemblies	36	36	34	36	36
Maximum Assembly Weight, lbs[6]	≤950	≤950	≤950	≤950	≤950
Maximum Assembly Length, in	111.25	111.79	111.25	111.56	111.79
Active Fuel Length, in	91	91	92	91	91
Fuel Rod Cladding	Zircaloy	Zircaloy	Stainless Steel	Zircaloy	Zircaloy
Maximum Uranium, kgU	245.6	239.4	286.9	239.4	70.0
Maximum Initial ^{235}U, wt %[5]	4.0	3.9	4.94	4.0	4.0
Minimum Initial ^{235}U, wt %[5]	4.0	3.7[3]	4.94	3.5	3.5
Maximum Burnup, MWD/MTU	32,000	36,000	32,000	36,000	36,000
Maximum Assembly Decay Heat, kW	0.272	0.347	0.259	0.316	0.097
Maximum Cask Decay Heat, kW	9.8	12.5	8.8	11.4[4]	3.5
Minimum Cool Time, yr	11.0	8.1	22.0	10[4]	8.0

1. The Yankee Class Fuel includes United Nuclear Type A and Type B, Combustion Engineering Type A and Type B, Exxon-ANF Type A and Type B and Westinghouse Type A and Type B. The United Nuclear Type A is the most reactive assembly and is used as the design basis fuel for criticality analyses. The Combustion Type A is the design basis fuel for shielding and thermal evaluations. The Westinghouse Type B fuel is the design basis fuel for structural weight considerations. The Yankee Class design basis fuels bound a Yankee Class Reconfigured Fuel Assembly.
2. The maximum number of mixed Type Yankee Class fuel assemblies is limited to 36 or to 30,600 lbs, total loaded assembly weight.
3. The NAC-STC can also accommodate canistered Combustion Engineering 3.5 wt % enriched fuel having a minimum cool time of 7 years and a burnup of 32,000 MWD/MTU.
4. The limit corresponds to Exxon assemblies with Zircaloy in-core hardware. Exxon assemblies with steel in-core hardware are limited by a minimum cool time of 16 years and a maximum decay heat of 9.7 kW.
5. Nominal enrichment fabrication values.
6. Up to 36 intact fuel assemblies of any type, not exceeding 30,600 pounds total weight, are authorized.

Table 1.2-4 NAC-STC Design Basis Connecticut Yankee Fuel Characteristics

Parameter	Connecticut Yankee Fuel [5, 6, 9]				
	PWR [1,4] 15x15	PWR [2] 15x15	PWR [3] 15x15 Enriched > 3.93 wt% ^{235}U	CY-MPC RFA [7]	CY-MPC DFC [8]
Maximum Number of Assemblies	26	26	24	4	4
Maximum Assembly Weight, lbs	≤1,500	≤1500	≤1500	≤1600	≤1600
Maximum Assembly Length, in	137.1	137.1	137.1	141.5	141.5
Maximum Active Fuel Length, in	121.8	121.35	120.6	121.8	121.8
Fuel Rod Cladding	SS	Zircaloy	Zircaloy	Zirc/SS	Zirc/SS
Maximum Uranium, kgU	433.7	397.1	390	212	433.7
Maximum Initial ^{235}U, wt%	4.03	3.93	4.61	4.61	4.61
Minimum Initial ^{235}U, wt%	3.00	2.95	2.95	2.95	2.95
Maximum Burnup, MWD/MTU	38,000	43,000	43,000	43,000	43,000
Maximum Assembly Decay Heat, kW	0.654	0.654	0.654	0.321	0.654
Maximum Cask Decay Heat, kW	17	17	17	17	17
Minimum Cool Time, years	10	10	10	10	10

1. Connecticut Yankee stainless steel clad spent fuel includes assemblies manufactured by Westinghouse Electric Co. (Westinghouse), Babcock & Wilcox (B&W) Fuel Co., Gulf General Atomic (GGA), Gulf Nuclear Fuel Co. (GNFC), and Nuclear Materials and Manufacturing Co. (NUMEC).
2. Connecticut Yankee zircaloy clad spent fuel includes assemblies manufactured by Gulf General Atomic (GGA), Nuclear Materials and Manufacturing Co. (NUMEC), and Babcock & Wilcox (B&W) Fuel Co.
3. The Westinghouse Vantage 5H zircaloy clad spent fuel assemblies have an initial uranium enrichment greater than 3.93% wt ^{235}U. They are the most reactive and are used as the design basis fuel for criticality analyses.
4. The Westinghouse stainless steel clad spent fuel assemblies are used as the design basis fuel for shielding, thermal, and structural evaluations.
5. Intact fuel assemblies may have a reactor control cluster assembly (RCCA) installed and are not restricted as to loading position in the basket.
6. Intact fuel assemblies may have a flow mixer (FM) installed. Assemblies with flow mixers installed must be loaded into one of the eight interior fuel loading positions in the basket.
7. Reconfigured fuel assemblies (RFA) must be loaded in one of the four oversize fuel loading positions.
8. Damaged Fuel Cans (DFC) must be loaded in one of the four oversize fuel loading positions.
9. Solid stainless steel rods may be inserted into CY fuel assembly RCCA guide tubes for fuel assemblies not containing a RCCA.

R-200122

REV	CHANGE
0	INITIAL ISSUE
1	INC DCR 0A
2	INC DCR 1A
3	INC DCR 2A
4	INC DCR 3A
5	INC DCR 4A
6	INC DCR 5A
7	INC DCR 6A
8	INC DCR 7A
9	INC DCR 8A
10	INC DCR 9A,9B
11	INC DCR 10A
12	INC DCR 11A,11B
13	INC DCR 12A
14	INC DCR 13A

13. LUBRICATE WITH NEVER-SEEZ OR EQUAL AND TIGHTEN 2 1/4 TURNS AFTER HAND TIGHT.

14 12. (DELETED)

11. RELIEF VALVE IS FACTORY PRESET TO 10PSI +/-5%.

10. LUBRICATE WITH NEVER-SEEZ OR EQUAL AND TORQUE TO 20±5 IN-LBS.

9. LUBRICATE WITH NEVER-SEEZ OR EQUAL AND TORQUE TO 50±10 IN-LBS.

8. ASME SA564,TYPE 630,CLASS, A OR B.

7. HEAT TREAT TO CONDITION H1150.

6. CHROME PLATE THE THREADED PORTION OF THE COMPONENT, AT A MINIMUM.

5. LUBRICATE WITH NEVER-SEEZ OR EQUAL AND TORQUE TO 550±50 FT-LBS.

4. LUBRICATE WITH NEVER-SEEZ OR EQUAL AND TORQUE TO 2540±200 FT-LBS.

3. LUBRICATE WITH NEVER-SEEZ OR EQUAL AND TORQUE COVER BOLTS TO 140±10 INCH-LBS.

2. -99 ASSEMBLY IS FOR ALTERNATE DIRECTLY LOADED TRANSPORT CONFIGURATION.
-98 ASSEMBLY IS FOR STORAGE/TRANSPORT CONFIGURATION.

1. (DELETED)

NOTES:

14				27	DELETED				
	1	1		26	O-RING	VITON	COML		PARKER 3-908V747-75
	1			25	OUTER LID			423-805-98	
	1			24	INNER LID			423-803-98	
	2	2		23	CSK SOC HD SCREW	ST.STL.	COML		1/2-13 UNC X 1.75
	1	1		22	SWAGE RING	ST.STL.		423-811-2	
	1	1		21	DRAIN LINE BOSS			423-811-98	
	1			20	PORT COVER ASSY			423-807-96	
	1			19	PORT COVER ASSY	ST.STL.		423-807-97	
9	1	1		18	NIPPLE	ST.STL.	COML		SNAP-TITE SVHN8-8EMV
	1	1		17	O-RING	METAL	COML		FURON #10061-04-1-0
6 10	4			16	SHIELD BOLT	ST.STL.	COML		1/4-20UNC-2A X 1/2 LG SHCS
	4			15	FLATWASHER	ST.STL.	COML		1/4 DIA.
9	1			14	ADAPTOR	ST.STL.	COML		DATA INST. AD-6SS
	1			13	PRESSURE TRANSDUCER	ST.STL.	COML		DATA INST. MODEL AB
9		1		12	PLUG	ST.STL.	COML		PARKER 4P5ON
	2	2		11	RELIEF VALVE	ST.STL.	COML		CIRCLE SEAL NO.524T-4M-10 OR 524T1-4M-10
11	1	1		10	FERRULE	BRASS	COML		WEATHERHEAD 60X16, 1"TUBE
	1	1		9	DRAIN TUBE	304 ST.STL.	COML		#1 TUBE W/ .035 WALL
7 6 5	36	36		8	OUTER LID BOLT	ST.STL.	SEE NOTE 8		1-8UNC X 3 1/2 LG SHCS
4	42	42		7	INNER LID BOLT			423-811-1	
	1	1		6	FUEL BASKET			423-870-99	
3		2		5	PORT COVER ASSY			423-807-99	
	2			4	TRUNNION RECESS SHIELD			423-811-99	
		1		3	OUTER LID			423-805-99	
		1		2	INNER LID			423-803-99	
	1	1		1	CASK BODY			423-802-99	
B7	B8	B9		ITEM	NAME	MATERIAL	SPEC	DRAWING No.	DESCRIPTION
ASSY	ASSY	ASSY							
QUANTITY									

NAC INTERNATIONAL

UNLESS OTHERWISE STATED
DIMENSIONING AND TOLERANCING SHALL BE PER ASME Y14.5M-94, UNSPECIFIED DIMENSIONAL TOLERANCES ARE SHOWN BELOW
ALL THREAD DEPTH CALLOUTS ARE TO BE CONSIDERED AS A MIN. DEPTH OF PERFECT THREADS. THE ACTUAL DEPTH OF THE THREADS IS NOT SUBJECT TO TOLERANCE CONTROLS.

DEC	UNDER 3	±.003
	3-12	±.005
	OVER 12	±.010
INC	UNDER 6	±.02
	6-18	±.03
	OVER 18	±.06
M	ALL	±.1
FRACTIONAL ±1/8		
ANGLES ±0.5°		

WEIGHTS ARE APPROXIMATE AND ARE TO BE USED FOR HANDLING PURPOSES ONLY
ALL DIMENSIONS ARE IN INCHES
BORDER SIZE: F (40 X 28)
ALL UNSPECIFIED TOOL RADII: .015 - .030
BREAK ALL SHARP CORNERS .015 - .030
MACHINED SURFACES TO BE ▽ OR BETTER
NEXT ASSEMBLY: 423-900
DRAWING TYPE: LICENSE

GROUP	NAME	DATE
PREPARER	[signature]	9-4-03
CHECKER	R. W. Walker	9-4-03
PROJECT MANAGER	[signature]	9/9/03
ENGINEERING	[signature]	9/10/03
LICENSING	Anthony L. Pietz	9/11/03
QUALITY	[signature]	9/12/03

CASK ASSEMBLY-
NAC-STC CASK

PROJECT 423 | DRAWING 800 | REV 14
SCALE 1/6 | WEIGHT NOTED | SH 1 OF 3 | 1.34PM 9-4-2003

NAC DCRM 02

FIGURE WITHHELD UNDER 10 CFR 2.390

NAC INTERNATIONAL

CASK ASSEMBLY
NAC-STC CASK

PROJECT 423		DRAWING 800	REV 14
SCALE 1/6	EST WT. NOTED	SH 2 OF 3	3:30PM 8-6-2003

FIGURE WITHHELD UNDER 10 CFR 2.390

NAC INTERNATIONAL

CASK ASSEMBLY
NAC-STC CASK

PROJECT 423		DRAWING 800	REV 14
SCALE 1/6	EST WT. NOTED	SH 3 OF 3	1:50PM 8-4-2003

FIGURE WITHHELD UNDER 10 CFR 2.390

ASSY	ASSY	ASSY
QUANTITY		

UNLESS OTHERWISE STATED

DIMENSIONING AND TOLERANCING SHALL BE PER ASME, Y14.5M-94, UNSPECIFIED DIMENSIONAL TOLERANCES ARE SHOWN BELOW.

ALL THREAD DEPTH CALLOUTS ARE TO BE CONSIDERED AS A MIN. DEPTH OF PERFECT THREADS. THE ACTUAL DEPTH OF THE THREADS IS NOT SUBJECT TO TOLERANCE CONTROLS.

DEC	UNDER 3	±.003
	3-12	±.005
	OVER 12	±.010
FRC	UNDER 6	±.02
	6-18	±.03
	OVER 18	±.06
∠	ALL	±.1
FRACTIONAL		±1/8
ANGLES		±0.5°

WEIGHTS ARE APPROXIMATE AND ARE TO BE USED FOR HANDLING PURPOSES ONLY

ALL DIMENSIONS ARE IN INCHES

SCHOLEN SIZE: F (40 X 28)

ALL UNSPECIFIED TOOL RADII .015 - .030

BREAK ALL SHARP CORNERS .015 - .030

MACHINED SURFACES TO BE 125 OR BETTER

NEXT ASSEMBLY: 423-800

DRAWING TYPE: LICENSE

GROUP	NAME	DATE
PREPARED	[illegible]	1-27-04
CHECKED	R. W. [illegible]	1-27-04
PROJECT MANAGER	[illegible]	1/27/04
ENGINEERING	[illegible] TAD	1/27/04
LICENSING	J.C. Thompson	1/27/04
QUALITY	[illegible]	2/3/04

NAC INTERNATIONAL

CASK BODY-
NAC-STC CASK

PROJECT 423		DRAWING 802	REV 20
SCALE 1/10	WEIGHT NOTED	SH 1 OF 7	5.3.1 rev 1-27-2004

FIGURE WITHHELD UNDER 10 CFR 2.390

NAC INTERNATIONAL

CASK BODY–
NAC–STC CASK

PROJECT 423		DRAWING 802	REV 20
SCALE 1/6	EST. WT. NOTED	SH 2 OF 7	11:23AM 8-24-2003

FIGURE WITHHELD UNDER 10 CFR 2.390

NAC INTERNATIONAL

CASK BODY–
NAC–STC CASK

PROJECT 423		DRAWING 802	REV 20
SCALE 1/8	EST.WT. NOTED	SH 3 OF 7	11:23AM 8-26-2003

FIGURE WITHHELD UNDER 10 CFR 2.390

NAC INTERNATIONAL

CASK BODY–
NAC–STC CASK

PROJECT 423		DRAWING 802	REV 20
SCALE 1/6	EST WT. NOTED	SH 4 OF 7	11:26AM 8-21-2003

FIGURE WITHHELD UNDER 10 CFR 2.390

NAC INTERNATIONAL

CASK BODY–
NAC–STC CASK

PROJECT 423		DRAWING 802	REV 20
SCALE 1/4	EST WT. NOTED	SH 5 OF 7	11:24AM 8-24-2003

FIGURE WITHHELD UNDER 10 CFR 2.390

NAC INTERNATIONAL

CASK BODY–
NAC–STC CASK

PROJECT 423		DRAWING 802	REV 20
SCALE 1/4	EST WT. NOTED	SH 6 OF 7	11:26AM 9-24-2003

FIGURE WITHHELD UNDER 10 CFR 2.390

NAC INTERNATIONAL

CASK BODY–
NAC–STC CASK

PROJECT 423		DRAWING 802	REV 20
SCALE 1/4	EST WT. NOTED	SH 7 OF 7	11:26AM 8-24-2001

FIGURE WITHHELD UNDER 10 CFR 2.390

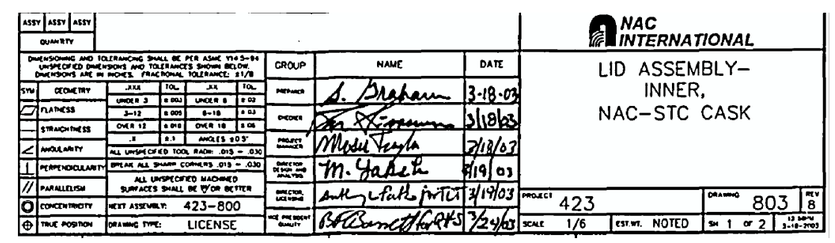

FIGURE WITHHELD UNDER 10 CFR 2.390

NAC INTERNATIONAL

LID ASSEMBLY–
INNER,
NAC–STC CASK

PROJECT 423		DRAWING 803	REV 8
SCALE 1/6	EST. WT. NOTED	SH 2 OF 2	12.SEP.98 3-18-2003

FIGURE WITHHELD UNDER 10 CFR 2.390

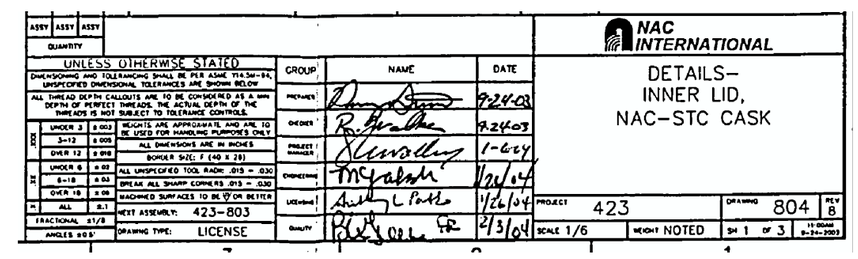

FIGURE WITHHELD UNDER 10 CFR 2.390

NAC INTERNATIONAL

DETAILS–
INNER LID,
NAC–STC CASK

PROJECT 423		DRAWING 804	REV 8
SCALE 1/6	EST.WT. NOTED	SH 2 OF 3	10:54AM 8-26-2003

FIGURE WITHHELD UNDER 10 CFR 2.390

NAC INTERNATIONAL

DETAILS–
INNER LID,
NAC–STC CASK

PROJECT 423		DRAWING 804	REV 8
SCALE 1/2	EST WT. NOTED	SH 3 OF 3	

FIGURE WITHHELD UNDER 10 CFR 2.390

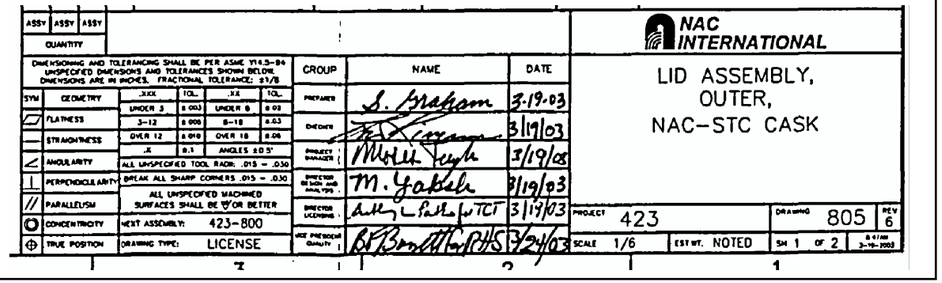

FIGURE WITHHELD UNDER 10 CFR 2.390

NAC INTERNATIONAL

LID ASSEMBLY,
OUTER,
NAC–STC CASK

PROJECT 423		DRAWING 805	REV 6
SCALE 1/6	EST WT. NOTED	SH 2 OF 2	3-10-2003

FIGURE WITHHELD UNDER 10 CFR 2.390

ASSY	ASSY	ASSY
QUANTITY		

DIMENSIONING AND TOLERANCING SHALL BE PER ASME Y14.5-94
UNSPECIFIED DIMENSIONS AND TOLERANCES SHOWN BELOW
DIMENSIONS ARE IN INCHES. FRACTIONAL TOLERANCE: ±1/8

SYM	GEOMETRY	.XXX	TOL.	.XX	TOL.
		UNDER 3	±.003	UNDER 6	±.02
	FLATNESS	3-12	±.005	6-18	±.03
	STRAIGHTNESS	OVER 12	±.010	OVER 18	±.06
		.X	±.1	ANGLES ±0.5°	
∠	ANGULARITY	ALL UNSPECIFIED TOOL RADII: .015 – .030			
⊥	PERPENDICULARITY	BREAK ALL SHARP CORNERS .015 – .030			
//	PARALLELISM	ALL UNSPECIFIED MACHINED SURFACES SHALL BE ▽ OR BETTER			
○	CONCENTRICITY	NEXT ASSEMBLY: 423-803			
⊕	TRUE POSITION	DRAWING TYPE: LICENSE			

GROUP	NAME	DATE
PREPARER	S. Brehm	3-18-03
CHECKER	[illegible]	3/18/03
PROJECT MANAGER	Mark Tuyle	3/18/03
DIRECTOR DESIGN AND ANALYSIS	M. Yakovlev	3/19/03
DIRECTOR, LICENSING	[illegible] for TCT	3/19/03
VICE PRESIDENT, QUALITY	[illegible] for RHS	3/24/03

NAC INTERNATIONAL

PORT COVERPLATE ASSY.
INNER LID,
NAC-STC CASK

PROJECT	423	DRAWING	806	REV 7
SCALE 1/1	EST WT. NOTED	SH 1 OF 1	1:10PM 3-18-2003	

FIGURE WITHHELD UNDER 10 CFR 2.390

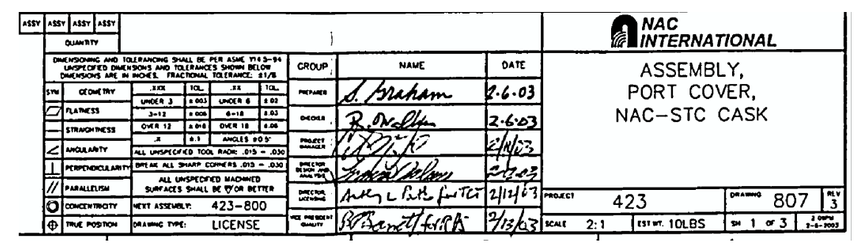

FIGURE WITHHELD UNDER 10 CFR 2.390

NAC INTERNATIONAL

ASSEMBLY,
PORT COVER,
NAC-STC CASK

PROJECT 423		DRAWING 807	REV 3
SCALE FULL	EST WT. 10LBS	SH 2 OF 3	12:15PM 3-6-2003

FIGURE WITHHELD UNDER 10 CFR 2.390

NAC INTERNATIONAL

ASSEMBLY,
PORT COVER,
NAC-STC CASK

PROJECT 423		DRAWING 807	REV 3
SCALE FULL	EST WT. 10LBS	SH 3 OF 3	12:13PM 7-8-2003

FIGURE WITHHELD UNDER 10 CFR 2.390

ASSY	ASSY	ASSY
QUANTITY		

DIMENSIONING AND TOLERANCING SHALL BE PER ASME Y14.5-94
UNSPECIFIED DIMENSIONS AND TOLERANCES SHOWN BELOW.
DIMENSIONS ARE IN INCHES. FRACTIONAL TOLERANCE: ±1/8

SYM	GEOMETRY	.XXX	TOL.	.XX	TOL.
	FLATNESS	UNDER 3	±.003	UNDER 6	±.02
		3-12	±.005	6-18	±.03
	STRAIGHTNESS	OVER 12	±.010	OVER 18	±.06
	ANGULARITY	.X	±.1	ANGLES ±0.5°	
		ALL UNSPECIFIED TOOL RADII .015 - .030			
⊥	PERPENDICULARITY	BREAK ALL SHARP CORNERS .015 - .030			
//	PARALLELISM	ALL UNSPECIFIED MACHINED SURFACES SHALL BE ▽ OR BETTER			
○	CONCENTRICITY	NEXT ASSEMBLY:			
⊕	TRUE POSITION	DRAWING TYPE: LICENSE			

GROUP	NAME	DATE
PREPARER	[illegible]	3/28/03
CHECKER	R. Walker	3-28-03
PROJECT MANAGER	[illegible]	3/28/03
DIRECTOR OF DESIGN AND ANALYSIS	M Yahel	3/28/03
DIRECTOR, LICENSING	[illegible]	3/28/03
VICE PRESIDENT QUALITY	[illegible]	3/28/03

NAC INTERNATIONAL

DETAILS,
NAC-STC CASK

PROJECT	423	DRAWING	811	REV 11
SCALE	1/1	EST. WT.	SH 1 OF 2	3:22PM 3-28-2003

FIGURE WITHHELD UNDER 10 CFR 2.390

NAC INTERNATIONAL

DETAILS,
NAC–STC CASK

PROJECT 423		DRAWING 811	REV 11
SCALE 1/1	EST WT.	SH 2 OF 2	12:36PM 3-27-2003

FIGURE WITHHELD UNDER 10 CFR 2.390

ASSY	ASSY	ASSY
QUANTITY		

UNLESS OTHERWISE STATED

DIMENSIONING AND TOLERANCING SHALL BE PER ASME Y14.5M-94. UNSPECIFIED DIMENSIONAL TOLERANCES ARE SHOWN BELOW.

ALL THREAD DEPTH CALLOUTS ARE TO BE CONSIDERED AS A MIN. DEPTH. OF PERFECT THREADS. THE ACTUAL DEPTH OF THE THREADS IS NOT SUBJECT TO TOLERANCE CONTROLS.

SIZE	UNDER 3	±.003
	3-12	±.005
	OVER 12	±.010
ANG	UNDER 6	±.02
	6-18	±.03
	OVER 18	±.06
M	ALL	±.1
FRACTIONAL ±1/8		
ANGLES ±0°5'		

WEIGHTS ARE APPROXIMATE AND ARE TO BE USED FOR HANDLING PURPOSES ONLY

ALL DIMENSIONS ARE IN INCHES

BORDER SIZE: F (40 X 28)

ALL UNSPECIFIED TOOL RADII .015 - .030

BREAK ALL SHARP CORNERS .015 - .030

MACHINED SURFACES TO BE ▽ OR BETTER

NEXT ASSEMBLY: 423-802,805,809,810

DRAWING TYPE: LICENSE

GROUP	NAME	DATE
PREPARER	[illegible]	9-24-03
CHECKER	R. J. Wallace	9-24-03
PROJECT MANAGER	[illegible]	1/6/04
ENGINEERING	M. Gabbah	1/24/04
LICENSING	[illegible]	1/26/04
QUALITY	[illegible]	4/3/04

NAC INTERNATIONAL

NAMEPLATES–
NAC–STC CASK

PROJECT	DRAWING	REV
423	812	6
SCALE FULL / WEIGHT	SH 1 OF 1	10 CHAR 2-24-2003

FIGURE WITHHELD UNDER 10 CFR 2.390

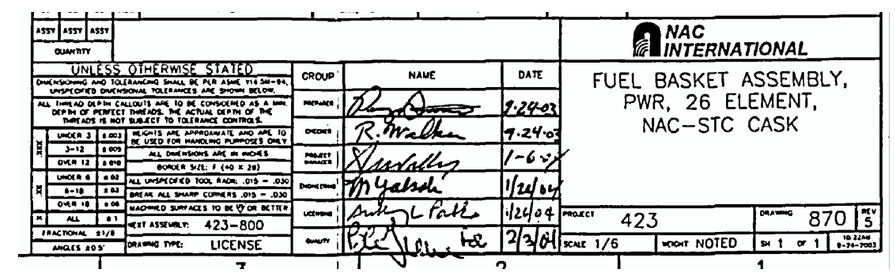

FIGURE WITHHELD UNDER 10 CFR 2.390

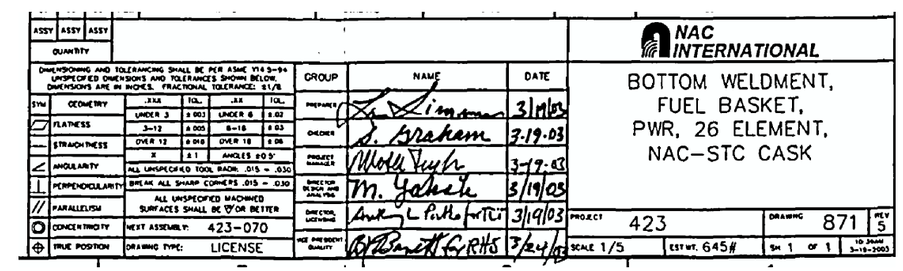

FIGURE WITHHELD UNDER 10 CFR 2.390

ASSY	ASSY	ASSY
QUANTITY		

DIMENSIONING AND TOLERANCING SHALL BE PER ASME Y14.5-94
UNSPECIFIED DIMENSIONS AND TOLERANCES SHOWN BELOW.
DIMENSIONS ARE IN INCHES. FRACTIONAL TOLERANCE: ±1/8

SYM	GEOMETRY	.XX	TOL.	.XX	TOL.
		UNDER .3	±.003	UNDER 6	±.02
	FLATNESS	3–12	±.005	6–18	±.03
	STRAIGHTNESS	OVER 12	±.010	OVER 18	±.06
		.X	±.1	ANGLES ±0.5°	
∠	ANGULARITY	ALL UNSPECIFIED TOOL RADII .015 – 0.30			
⊥	PERPENDICULARITY	BREAK ALL SHARP CORNERS .015 – .030			
//	PARALLELISM	ALL UNSPECIFIED MACHINED SURFACES SHALL BE 125 OR BETTER			
◎	CONCENTRICITY	NEXT ASSEMBLY: 423-870			
⊕	TRUE POSITION	DRAWING TYPE: LICENSE			

GROUP	NAME	DATE
PREPARER	L. Graham	5-9-02
CHECKER	[illegible]	5-10-02
PROJECT MANAGER	[illegible] FOR GMJ	5/10/02
DIRECTOR, RESEARCH AND ANALYSIS	[illegible]	5.14.02
DIRECTOR, LICENSING	[illegible] for	5/14/02
VICE PRESIDENT QUALITY	M. Milo FOR	5/14/02

NAC INTERNATIONAL

SUPPORT DISK AND
MISC BASKET DETAILS,
PWR, 26 ELEMENT,
NAC-STC CASK

PROJECT	423	DRAWING	873	REV 2
SCALE 1/5	EST WT.	SH 1 OF 1	2 copies 5-9-2002	

FIGURE WITHHELD UNDER 10 CFR 2.390

ASSY	ASSY	ASSY
QUANTITY		

UNLESS OTHERWISE STATED

DIMENSIONING AND TOLERANCING SHALL BE PER ASME Y14.5M-94, UNSPECIFIED DIMENSIONAL TOLERANCES ARE SHOWN BELOW.

ALL THREAD DEPTH CALLOUTS ARE TO BE CONSIDERED AS A MIN. DEPTH OF PERFECT THREADS. THE ACTUAL DEPTH OF THE THREADS IS NOT SUBJECT TO TOLERANCE CONTROLS.

.XXX	UNDER 3	±.003
	3-12	±.005
	OVER 12	±.010
.XX	UNDER 6	±.03
	6-18	±.03
	OVER 18	±.06
.X	ALL	±.1
FRACTIONAL ±1/8		
ANGLES ±0.5°		

WEIGHTS ARE APPROXIMATE AND ARE TO BE USED FOR HANDLING PURPOSES ONLY

ALL DIMENSIONS ARE IN INCHES

BORDER SIZE: F (40 X 28)

ALL UNSPECIFIED TOOL RADII: .015 - .030

BREAK ALL SHARP CORNERS .015 - .030

MACHINED SURFACES TO BE ▽ OR BETTER

NEXT ASSEMBLY: 423-870

DRAWING TYPE: LICENSE

GROUP	NAME	DATE
PREPARED	R. Wilcher	9-9-04
CHECKED	[illegible]	9-9-04
PROJECT MANAGER	Ken Hardman	9/9/04
ENGINEERING	[illegible]	9-10-04
LICENSING	[illegible]	9/10/04
QUALITY	Roy W. Barr	9/17/04

NAC INTERNATIONAL

TUBE,
NAC-STC CASK

PROJECT 423		DRAWING 875	REV 7
SCALE 1/1	WEIGHT NOTED	SH 1 OF 2	4:24 PM 9-9-2004

FIGURE WITHHELD UNDER 10 CFR 2.390

NAC INTERNATIONAL

TUBE,
NAC–STC CASK

PROJECT 423		DRAWING 875	REV 7
SCALE 1/1	WEIGHT NOTED	SH 2 OF 2	2:03PM 8-1-2004

FIGURE WITHHELD UNDER 10 CFR 2.390

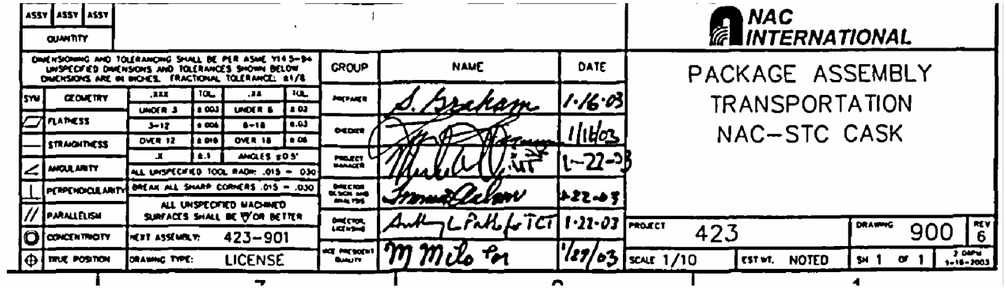

FIGURE WITHHELD UNDER 10 CFR 2.390

ASSY	ASSY	ASSY
QUANTITY		

DIMENSIONING AND TOLERANCING SHALL BE PER ASME Y14.5-94
UNSPECIFIED DIMENSIONS AND TOLERANCES SHOWN BELOW.
DIMENSIONS ARE IN INCHES. FRACTIONAL TOLERANCE: ±1/8

SYM	GEOMETRY	.XXX	TOL.	.XX	TOL.
	FLATNESS	UNDER 3	±.003	UNDER 6	±.02
		3-12	±.005	6-18	±.03
	STRAIGHTNESS	OVER 12	±.010	OVER 18	±.06
	ANGULARITY	.X	±.1	ANGLES ±0.5°	
⊥	PERPENDICULARITY	ALL UNSPECIFIED TOOL RADII: .015 – .030			
//	PARALLELISM	BREAK ALL SHARP CORNERS .015 – .030			
◎	CONCENTRICITY	ALL UNSPECIFIED MACHINED SURFACES SHALL BE 125 OR BETTER			
⊕	TRUE POSITION	NEXT ASSEMBLY: 414-872			
		DRAWING TYPE: LICENSE			

GROUP	NAME	DATE
PREPARER	Perry Dunn	4-1-04
CHECKER	B. Walker	4-1-04
PROJECT MANAGER	D. Wallace	4/1/04
DIRECTOR SERVICES AND ANALYSIS	M Yabsley	4/1/04
DIRECTOR, LICENSING	J.C. Shaffer	4/1/04
VICE PRESIDENT QUALITY	Ray W. Barnes for DHS	4/1/04

NAC INTERNATIONAL

DETAILS, CANISTER
CY-MPC

PROJECT	414	DRAWING	871	REV 6
SCALE 1/8	EST.WT. NOTED	SH 1 OF 2		

FIGURE WITHHELD UNDER 10 CFR 2.390

NAC INTERNATIONAL

DETAILS, CANISTER
CY-MPC

PROJECT 414		DRAWING 871	REV 6
SCALE 1/8	EST WT. NOTED	SH 2 OF 2	B. JAN 6-1-2004

R-200870

REV	CHANGE
0	INITIAL ISSUE
1	INC DCR 0A,0B
2	INC DCR 1A,1B,1C
3	INC DCR 2A,2B,2C,2D,2E
4	INC DCR 3A
5	INC DCR 4A
6	INC DCR 5A

13. WHEN NECESSARY DUE TO WELD SHRINKAGE FOLLOWING SHIELD LID WELDING, THE TSC MAY BE RE-ROUNDED BY MECHANICAL METHODS OR TOOLING. IF RE-ROUNDING IS PERFORMED, APPROPRIATE PRECAUTIONS SHALL BE TAKEN TO CONTINUOUSLY VENT CANISTER INTERNALS, AND THE EXAMINATION OF THE SHIELD LID FINAL WELD SURFACE, PRESSURE TEST AND LEAK TEST SHALL BE PERFORMED AFTER ALL RE-ROUNDING ACTIVITIES ARE COMPLETED. IF THE LONGITUDINAL SHELL WELD IS WITHIN 5 INCHES OF THE TOOLING CONTACT SHOE DURING RE-ROUNDING, THE ACCESSIBLE REGION OF THE INSIDE SURFACE OF THE LONGITUDINAL WELD SHALL BE EXAMINED. NAC APPROVED PROCEDURES SHALL BE USED FOR ALL RE-ROUNDING PROCESSES, WELD EXAMINATION AND ACCEPTANCE TESTS.

12. METHODS UTILIZED FOR FIT-UP, ALIGNMENT AND/OR SHIM INSTALLATION DURING WELDING OF THE SHIELD AND STRUCTURAL LIDS MAY INCLUDE THE USE OF TACK WELDS, CLAMPING MECHANISMS, BARS, OR HYDRAULIC TOOLING. NAC APPROVED PROCEDURES SHALL BE USED FOR ALL FIT-UP/ALIGNMENT PROCESSES.

11. *TRIM THE SPACER RING (ITEM 8) TO APPROPRIATE LENGTH* BY ALIGNING IT WITH THE ID OF THE CANISTER SHELL (ITEM 1), JUST BELOW THE LIP BEVEL, AT THE MINIMUM ID AFTER SHIELD LID WELD. LET THE SPACER RING FLOAT TO FILL THE ROOT GAP BETWEEN THE STRUCTURAL LID (ITEM 6) AND THE CANISTER SHELL.

10. WELD NOT TO EXCEED TOP SURFACE OF ITEM 5 (SHIELD LID ASSY).

(6) 9. AT THE OPTION OF THE USER, STAINLESS STEEL SHIMS (DRAWING 414-874) OF APPROPRIATE THICKNESS MAY BE USED IN THE WELDING OF THE SHIELD LID ASSEMBLY (ITEM 5) AND THE STRUCTURAL LID (ITEM 6) TO THE CANISTER SHELL (ITEM 1). THE STRUCTURAL LID TO CANISTER SHELL GAP SHALL BE 1/2" OR LESS DURING FIT-UP PRIOR TO WELDING.

8. ITEMS 10, 11 AND 13 SHALL BE FIELD MODIFIED (IF REQUIRED) TO FIT FLUSH TO SURFACE FOLLOWING THE WELDING OF THEIR RESPECTIVE LIDS.

7. PT FINAL SURFACE. EXAMINED PER ASME SECTION V, ARTICLE 6. ACCEPTANCE PER ASME SECTION III, ARTICLE NB-5350.

6. (DELETED)

5. PT ROOT AND FINAL SURFACE. SHOULD ROOT AND FINAL SURFACE BE ONE AND THE SAME (I.E., SINGLE PASS WELD) THEN ONLY ONE PT EXAMINATION IS REQUIRED. EXAMINED PER ASME SECTION V, ARTICLE 6. ACCEPTANCE PER ASME SECTION III, SUB-ARTICLE NB-5350.

4. AFTER INSTALLING BASKET (ITEM 2 OR 12), POSITION KEY (ITEM 9) IN SLOT AT TOP OF BASKET, AS SHOWN, AND TACK WELD KEY TO SIDE OF SHELL (ITEM 1). INSTALL LID SUPPORT RING (ITEM 4) AS SHOWN AND WELD TO SHELL AND KEY. INSTALL SHIELD LID ASSEMBLY (ITEM 5), LOCATING ON KEY.

3. LUBRICATE WITH A SPENT FUEL POOL COMPATIBLE LUBRICANT SUCH AS NEOLUBE. INSTALL FITTING BY HAND UNTIL METAL TO METAL CONTACT IS ACHIEVED THEN TORQUE TO 115±5 FT-LBS (FOR ELASTOMER SEALS) OR 135±15 FT-LBS (FOR METAL SEALS). LENGTH MAY BE ADJUSTED IN THE FIELD BY NAC TO ALLOW FOR STACK UP CONDITIONS.

2. PT ROOT, EACH SUCCESSIVE 3/8 INCH WELD THICKNESS, AND FINAL SURFACE. EXAMINE PER ASME SECTION V, ARTICLE 6. ACCEPTANCE PER ASME SECTION III, ARTICLE NB-5350; OR, UT PER ASME SECTION V, ARTICLE 5. ACCEPT PER ASME SECTION III, ARTICLE NB-5330 IN CONJUNCTION WITH PT EXAMINATION PER NOTE 5.

1. PACKAGE SHOWN FULLY ASSEMBLED. WELD SYMBOLS ARE FOR REFERENCE ONLY. REFER TO PROCEDURE FOR OPERATIONAL ASSEMBLY SEQUENCE.

NOTES:

(6) 19. THE STRUCTURAL LID AND INSTALLED SPACER RING CAN BE FIELD DRESSED IN LOCALIZED AREAS TO ELIMINATE INTERFERENCE WITH THE CANISTER SHELL DURING INSTALLATION OF THE LID.

(6) 18. THE FINAL WELD PROFILE OF THE SHIELD LID WELD WILL TYPICALLY "WASH" UP ONTO THE ID SURFACE OF THE SHELL. TO ENSURE THAT THE REINFORCEMENT DOES NOT INTERFERE WITH THE STRUCTURAL LID, THE WELD REINFORCEMENT SHALL NOT EXCEED .110" AND THE WASH PROFILE UP ONTO THE SHELL ID SHALL NOT EXCEED .220". THE WELD PROFILE ACCEPTANCE WILL BE VERIFIED WITH A GO/NO GO GAUGE WITH DIMENSIONS EQUAL TO THE WORST-CASE DIMENSIONAL CONFIGURATION OF THE STRUCTURAL LID PROFILE (TIGHTEST ACCEPTABLE FIT TO THE SHELL ID) NOTED IN DETAIL D-D OF DRAWING 414-871.

(6) 17. AT THE OPTION OF THE USER, STAINLESS STEEL SPACER SHIMS (DRAWING 414-875) MAY BE USED TO ADJUST THE STACK HEIGHT OF THE STRUCTURAL LID AND ENSURE THAT THE TOP OF THE LID IS EITHER LEVEL WITH THE TOP OF THE CANISTER OR EXTENDS PAST THE TOP EDGE OF THE CANISTER. SO LONG AS THE MINIMUM EFFECTIVE WELD THROAT IS MAINTAINED FOR THE CLOSURE WELD.

(6) 16. AT THE OPTION OF THE USER, STAINLESS STEEL SHIMS (DRAWING 414-874) OF APPROPRIATE SIZE AND THICKNESS MAY BE USED IN THE SPACER RING GROOVE IN THE STRUCTURAL LID TO ENSURE THE BAR FITS TIGHTLY AGAINST THE TOP OF THE GROOVE AT THE BOTTOM OF THE WELD JOINT. THE SHIMS MAY BE TACK WELDED TO THE BOTTOM OF THE SPACER RING.

15. FOLLOWING FINAL WELDING OF THE STRUCTURAL LID TO THE CANISTER SHELL, THE TOP OF THE STRUCTURAL LID SHALL BE FLUSH WITH OR ABOVE THE TOP OF THE CANISTER SHELL.

(6) 14. THE WELD DEPTH SHALL BE DETERMINED BY FIELD MEASUREMENT IF THE WELD BEVEL IS GREATER THAN 3/8".

87	88	89	ITEM	NAME	MATERIAL	SPEC	DRAWING No.	DESCRIPTION
	A/R	A/R	14	LUBRICANT	NEOLUBE OR EQUAL	COML		SPENT FUEL POOL COMPATIBLE LUBRICANT
	2	2	13	DOWEL PIN	ST. STL.	COML		1.0 DIA X 1.0 LONG
	1		12	FUEL BASKET ASSY			414-895-98	
	6	6	11	STRUCTURAL LID INSERT	ST. STL.	COML		BAR
	3	3	10	SHIELD LID INSERT	ST. STL.	COML		BAR
	1	1	9	KEY			414-871-4	
	1	1	8	SPACER RING			414-871-2	
	2	2	7	PORT COVER			414-871-7	
	1	1	6	STRUCTURAL LID			414-871-5	
	1	1	5	SHIELD LID ASSY			414-871-99	
	1	1	4	LID SUPPORT RING			414-871-1	
	1	1	3	DRAIN TUBE ASSY			414-873-99	
		1	2	FUEL BASKET ASSY			414-895-99	
	1	1	1	CANISTER SHELL			414-870-99	
ASSY	ASSY	ASSY	QUANTITY					

UNLESS OTHERWISE STATED
DIMENSIONING AND TOLERANCING SHALL BE PER ASME Y14.5M-94, UNSPECIFIED DIMENSIONAL TOLERANCES ARE SHOWN BELOW.
ALL THREAD DEPTH CALLOUTS ARE TO BE CONSIDERED AS A MIN. DEPTH OF PERFECT THREADS. THE ACTUAL DEPTH OF THE THREADS IS NOT SUBJECT TO TOLERANCE CONTROLS.

DEC	UNDER 3	± 0.03
	3-12	± 0.05
	OVER 12	± 0.10
FRC	UNDER 6	± 0.03
	6-18	± 0.03
	OVER 18	± 0.06
∠	ALL	± 1
FRACTIONAL		± 1/8
ANGLES		± 0.5°

WEIGHTS ARE APPROXIMATE AND ARE TO BE USED FOR HANDLING PURPOSES ONLY
ALL DIMENSIONS ARE IN INCHES
BORDER SIZE: F (40 X 28)
ALL UNSPECIFIED TOOL RADII: .015 – .030
BREAK ALL SHARP CORNERS .015 – .030
MACHINED SURFACES TO BE 125 OR BETTER
NEXT ASSEMBLY: 414-862
DRAWING TYPE: LICENSE

GROUP	NAME	DATE
PREPARER	[signature]	1-21-04
CHECKER	R. Wallace	1-21-04
PROJECT MANAGER	[signature]	1/22/04
ENGINEERING	[signature] for TAD	1/27/04
LICENSING	[signature]	1-27-04
QUALITY	Roy W. Barr	2-2-04

NAC INTERNATIONAL

ASSEMBLY, TRANSPORTABLE STORAGE CANISTER (TSC), CY-MPC

PROJECT	DRAWING	REV
414	872	6
SCALE 1/8	WEIGHT NOTED	SH 1 OF 3

3 DRPG 1-21-2004

NAC DCRM 01

FIGURE WITHHELD UNDER 10 CFR 2.390

NAC INTERNATIONAL

ASSEMBLY, TRANSPORTABLE STORAGE CANISTER (TSC), CY-MPC

PROJECT 414		DRAWING 872	REV 6
SCALE 1/8	EST WT. NOTED	SH 2 OF 3	2:57PM 1-15-2004

FIGURE WITHHELD UNDER 10 CFR 2.390

NAC INTERNATIONAL

ASSEMBLY, TRANSPORTABLE STORAGE CANISTER (TSC), CY–MPC

PROJECT 414		DRAWING 872	REV 6
SCALE 1/8	EST WT. NOTED	SH 3 OF 3	1-13-2004

ℓ-200871

REV	CHANGE
0	INITIAL ISSUE
1	INC DCR 0A,0B
2	INC DCR 1A,1B
3	INC DCR 2A
4	INC DCR 3A
5	INC DCR 4A,4B,4C
6	INC DCR 5A,5B
7	INC DCR 6A

(7) 6. AT OPTION OF THE USER, STAINLESS STEEL SPACER SHIMS (DRAWING 414-875) MAY BE USED TO ADJUST THE HEIGHT OF THE STRUCTURAL LID AND ENSURE THAT THE TOP OF THE LID IS EITHER LEVEL WITH THE TOP OF THE CANISTER OR EXTENDS PAST THE TOP EDGE OF THE CANISTER OR EXTENDS PAST CANISTER, SO LONG AS THE MINIMUM EFFECTIVE WELD THROAT IS MAINTAINED FOR THE CLOSURE WELD.

(5) PT ROOT AND FINAL SURFACE. SHOULD ROOT AND FINAL SURFACE BE ONE AND THE SAME (I.E., SINGLE PASS WELD) THEN ONLY ONE PT EXAMINATION IS REQUIRED. EXAMINED PER ASME SECTION V, ARTICLE 6. ACCEPTANCE PER ASME SECTION III, SUB-ARTICLE NB-5350.

(4) AFTER INSTALLING BASKET, ITEM 2, POSITION KEY (ITEM 9) IN SLOT AT TOP OF BASKET, AS SHOWN, AND TACK WELD KEY TO SIDE OF SHELL (ITEM 1). INSTALL LID SUPPORT RING (ITEM 4) AS SHOWN AND WELD TO SHELL AND KEY. INSTALL SHIELD LID ASSEMBLY (ITEM 5), LOCATING ON KEY.

(3) LUBRICATE WITH A SPENT FUEL POOL COMPATIBLE LUBRICANT SUCH AS NEOLUBE. INSTALL FITTING BY HAND UNTIL METAL TO METAL CONTACT IS ACHIEVED THEN TORQUE TO 115±5 FT-LBS (FOR ELASTOMER SEALS) OR 135±15 FT-LBS (FOR METAL SEALS). LENGTH MAY BE ADJUSTED IN THE FIELD BY NAC TO ALLOW FOR STACK UP CONDITIONS.

(2) PT ROOT, EACH SUCCESSIVE 3/8 INCH WELD THICKNESS, AND FINAL SURFACE. EXAMINE PER ASME SECTION V, ARTICLE 6. ACCEPTANCE PER ASME SECTION III, ARTICLE NB-5350; OR, UT PER ASME SECTION V, ARTICLE 5. ACCEPT PER ASME SECTION III, ARTICLE NB-5330 IN CONJUNCTION WITH PT EXAMINATION PER NOTE 5.

1. PACKAGE SHOWN FULLY ASSEMBLED. WELD SYMBOLS ARE FOR REFERENCE ONLY. REFER TO PROCEDURE FOR OPERATIONAL ASSEMBLY SEQUENCE.

NOTES:

(7) 16. METHODS UTILIZED FOR FIT-UP, ALIGNMENT AND/OR SHIM INSTALLATION DURING WELDING OF THE SHIELD AND STRUCTURAL LIDS MAY INCLUDE THE USE OF TACK WELDS, CLAMPING MECHANISMS, BARS, OR HYDRAULIC TOOLING. NAC APPROVED PROCEDURES SHALL BE USED FOR ALL FIT-UP/ ALIGNMENT PROCESSES.

(7) (15) WELD NOT TO EXCEED TOP SURFACE OF ITEM 5 (SHIELD LID ASSEMBLY).

(7) 14. TRIM THE SPACER RING (ITEM 8) TO APPROPRIATE LENGTH BY ALIGNING IT WITH THE I.D. OF THE CANISTER SHELL (ITEM 1), JUST BELOW THE LIP BEVEL, AT THE MINIMUM I.D. AFTER SHIELD LID WELD. LET THE SPACER RING FLOAT TO FILL THE ROOT GAP BETWEEN THE STRUCTURAL LID (ITEM 6) AND THE CANISTER SHELL.

(7) 13. THE STRUCTURAL LID AND INSTALLED SPACER RING CAN BE FIELD DRESSED IN LOCALIZED AREAS TO ELIMINATE INTERFERENCE WITH THE CANISTER SHELL DURING INSTALLATION OF THE LID.

(7) 12. THE FINAL WELD PROFILE OF THE SHIELD LID WELD WILL TYPICALLY "WASH" UP ONTO THE ID SURFACE OF THE SHELL. TO ENSURE THAT THE REINFORCEMENT DOES NOT INTERFERE WITH THE STRUCTURAL LID, THE WELD REINFORCEMENT SHALL NOT EXCEED .110" AND THE WASH PROFILE UP ONTO THE SHELL ID SHALL NOT EXCEED .220". THE WELD PROFILE ACCEPTANCE WILL BE VERIFIED WITH A GO/NO GO GAUGE WITH DIMENSIONS EQUAL TO THE WORST-CASE DIMENSIONAL CONFIGURATION OF THE STRUCTURAL LID PROFILE (TIGHTEST ACCEPTABLE FIT TO THE SHELL ID) NOTED IN DETAIL D-D OF DRAWING 414-871.

11. WHEN NECESSARY DUE TO WELD SHRINKAGE FOLLOWING SHIELD LID WELDING, THE TSC MAY BE RE-ROUNDED BY MECHANICAL METHODS OR TOOLING. IF RE-ROUNDING IS PERFORMED, APPROPRIATE PRECAUTIONS SHALL BE TAKEN TO CONTINUOUSLY VENT CANISTER INTERNALS, AND THE EXAMINATION OF THE SHIELD LID FINAL SURFACE, PRESSURE TEST AND LEAK TEST SHALL BE PERFORMED AFTER ALL RE-ROUNDING ACTIVITIES ARE COMPLETED. IF THE LONGITUDINAL SHELL WELD IS WITHIN 5 INCHES OF THE TOOLING CONTACT SHOE DURING RE-ROUNDING, THE ACCESSIBLE REGION OF THE INSIDE SURFACE OF THE LONGITUDINAL WELD SHALL BE EXAMINED. NAC APPROVED PROCEDURES SHALL BE USED FOR ALL RE-ROUNDING PROCESSES, WELD EXAMINATION AND ACCEPTANCE TESTS.

(7) 10. AT THE OPTION OF THE USER, STAINLESS STEEL SHIMS (DRAWING 414-874) OF APPROPRIATE SIZE AND THICKNESS MAY BE USED IN THE SPACER RING GROOVE IN THE STRUCTURAL LID TO ENSURE THE BAR FITS TIGHTLY AGAINST THE TOP OF THE GROOVE AT THE BOTTOM OF THE WELD JOINT. THE SHIM MAY BE TACK WELDED TO THE BOTTOM OF THE SPACER RING.

(7) (9) AT THE OPTION OF THE USER, STAINLESS STEEL SHIMS (DRAWING 414-874) OF APPROPRIATE THICKNESS MAY BE USED IN THE WELDING OF THE SHIELD LID ASSEMBLY (ITEM 5) AND THE STRUCTURAL LID (ITEM 6) TO THE CANISTER SHELL (ITEM 1). THE STRUCTURAL LID TO CANISTER SHELL GAP SHALL BE 1/2" OR LESS DURING FIT-UP PRIOR TO WELDING.

(8) ITEMS 10 , 11 AND 12 ARE TO BE INSTALLED FLUSH TO SURFACE FOLLOWING THE WELDING OF THEIR RESPECTIVE LIDS.

(7) PT FINAL SURFACE. EXAMINED PER ASME SECTION V, ARTICLE 6. ACCEPTANCE PER ASME SECTION III, ARTICLE NB-5350.

97	98	99	ITEM	NAME	MATERIAL	SPEC	DRAWING No.	DESCRIPTION
		A/R	13	LUBRICANT	PER NOTE 3	COML		
		2	12	DOWEL PIN	ST. STL.	COML		1.0 DIA X 1.0 LONG
		6	11	STRUCTURAL LID INSERT	ST. STL.	COML		BAR
		3	10	SHIELD LID INSERT	ST. STL.	COML		BAR
		1	9	KEY			414-871-4	
		1	8	SPACER RING			414-871-2	
		2	7	PORT COVER			414-871-7	
		1	6	STRUCTURAL LID			414-871-5	
		1	5	SHIELD LID ASSY			414-888-98	
		1	4	LID SUPPORT RING			414-871-1	
		1	3	DRAIN TUBE ASSY			414-873-99	
		1	2	BASKET ASSEMBLY			414-887-99	
		1	1	CANISTER SHELL			414-888-99	
ASSY	ASSY	ASSY	QUANTITY					

UNLESS OTHERWISE STATED
DIMENSIONING AND TOLERANCING SHALL BE PER ASME Y14.5M-94, UNSPECIFIED DIMENSIONAL TOLERANCES ARE SHOWN BELOW.
ALL THREAD DEPTH CALLOUTS ARE TO BE CONSIDERED AS A MIN. DEPTH OF PERFECT THREADS. THE ACTUAL DEPTH OF THE THREADS IS NOT SUBJECT TO TOLERANCE CONTROLS.

LINEAR	UNDER 3	±.003
	3-12	±.005
	OVER 12	±.010
ANGLE	UNDER 6	±.02
	6-18	±.03
	OVER 18	±.05
FRACTIONAL	ALL	±1
	FRACTIONAL ±1/8	
	ANGLES ±0.5°	

WEIGHTS ARE APPROXIMATE AND ARE TO BE USED FOR HANDLING PURPOSES ONLY
ALL DIMENSIONS ARE IN INCHES
BORDER SIZE: F (40 X 28)
ALL UNSPECIFIED TOOL RADII: .015 - .030
BREAK ALL SHARP CORNERS .015 - .030
MACHINED SURFACES TO BE ▽ OR BETTER
NEXT ASSEMBLY: 414-862
DRAWING TYPE: LICENSE

GROUP	NAME	DATE
PREPARER		1/22/04
CHECKER		1-22-04
PROJECT MANAGER		1/22/04
ENGINEERING		1/27/04
LICENSING		1/27/04
QUALITY		2/2/04

NAC INTERNATIONAL

ASSEMBLY, TRANSPORTABLE STORAGE CANISTER (TSC), GTCC CY-MPC

PROJECT	DRAWING	REV
414	889	7
SCALE 1/8	WEIGHT NOTED	SH 1 OF 3

NAC DCRM 01

FIGURE WITHHELD UNDER 10 CFR 2.390

NAC INTERNATIONAL

ASSEMBLY, TRANSPORTABLE STORAGE CANISTER (TSC), GTCC CY–MPC

PROJECT 414		DRAWING 889	REV 7
SCALE 1/8	EST WT. NOTED	SH 2 OF 3	1:42PM 1-22-2004

FIGURE WITHHELD UNDER 10 CFR 2.390

NAC INTERNATIONAL

ASSEMBLY, TRANSPORTABLE
STORAGE CANISTER (TSC),
GTCC
CY-MPC

PROJECT 414		DRAWING 889	REV 7
SCALE 1/8	EST.WT. NOTED	SH 3 OF 3	2-4-PM 1-29-2004

Chapter 2

2.0 STRUCTURAL EVALUATION

The structural analyses of the NAC-STC spent fuel transportation and storage cask demonstrate that the package satisfies the requirements of Part 71 of Title 10, Chapter 1 of the Code of Federal Regulations—specifically, Subpart E, "Package Approval Standards," and Subpart F, "Package and Special Form Tests." It is also designed to satisfy the requirements of IAEA TS-R-1. It is shown that containment is not breached under any of the normal conditions of transport or the hypothetical accident conditions.

The structural analyses presented herein utilize current state-of-the-art methods for calculating stresses in large structures subject to steady state and transient loadings. The evaluation of the structural characteristics of the containment boundary will be based on a conservative interpretation of the requirements of Section III of the "ASME Boiler and Pressure Vessel Code, Nuclear Power Plant Components." The "ASME Boiler and Pressure Vessel Code" is the recognized standard for pressure vessel analysis, mechanical properties of materials, and allowable stress values.

This section of the Safety Analysis Report demonstrates that the NAC-STC design is capable of meeting the rigors of transport, while carrying spent nuclear fuel in the directly loaded or canistered configurations or Greater Than Class C waste in the canistered configuration. It documents the results of the analyses, which were performed to provide assurance that the NAC-STC design also satisfies the statutory requirements for licensing.

THIS PAGE INTENTIONALLY LEFT BLANK

2.1 Structural Design

2.1.1 Discussion

The NAC-STC is a cylindrical, multiwall cask designed to safely transport directly loaded or canistered spent nuclear fuel or canistered Greater Than Class C (GTCC) waste. The cask accommodates up to 26 directly loaded design basis PWR fuel assemblies. In the canistered fuel or waste configurations, the NAC-STC transports the Multi-Purpose Canister (MPC) of the NAC-MPC system, which is designed for the long-term storage and transport of spent fuel. The NAC-MPC is provided in several configurations to provide efficient storage and transport of spent fuel, damaged fuel and GTCC waste. The NAC-MPC canister system designed for Yankee Class fuel is designated the Yankee-MPC and holds up to 36 Yankee Class fuel assemblies, Reconfigured Fuel Assemblies and Recaged Fuel Assemblies, including up to four fuel assemblies loaded in Damaged Fuel Cans. Using a modified internal basket, the same size canister has 24 loading positions for Yankee GTCC waste. The NAC-MPC canister system designed for Connecticut Yankee is designated the CY-MPC and holds up to 26 Connecticut Yankee fuel assemblies or, using a modified internal basket, up to 24 containers of Connecticut Yankee GTCC waste. The Yankee-MPC and CY-MPC canisters have the same external diameter, but have different overall lengths. The CY-MPC canister system has a higher allowable contents weight than the directly loaded or Yankee-MPC system. To accommodate the higher contents weight, a balsa wood impact limiter is used with the CY-MPC configuration. The balsa wood impact limiter is referred to as the "balsa impact limiter." The balsa impact limiter has performance characteristics comparable to the redwood and balsa wood impact limiters ("redwood impact limiter"), but weighs significantly less. As noted in Section 2.2, the balsa impact limiters can be used with any NAC-STC configuration. However, the redwood impact limiters are used only with the directly loaded and Yankee-MPC configurations.

The primary components of the NAC-STC are: (1) the cask body—inner shell, outer shell, lead shell, and bottom; (2) the inner lid, bolts, and metallic o-rings; (3) the outer lid, bolts, and metallic o-ring; (4) the port covers, port coverplates, bolts, and o-rings; (5) the neutron shield; (6) the trunnions; (7) the transport impact limiters—upper and lower; and (8) the fuel basket. The NAC-STC primary containment boundary for storage and transport after storage consists of: (1) inner shell center section and upper and lower inner shell rings (transition sections); (2) bottom inner forging; (3) top forging; (4) inner lid and inner lid outer metallic o-ring; (5) inner lid interseal test port and its threaded plug with metallic o-ring; (6) vent port coverplate and vent

port coverplate outer metallic o-ring; (7) vent port coverplate interseal test threaded plug with metallic o-ring; (8) drain port coverplate and drain port coverplate outer metallic o-ring; and (9) drain port coverplate interseal test threaded plug with metallic o-ring. The NAC-STC primary containment boundary for transport immediately after loading consists of: (1) inner shell center section and upper and lower inner shell rings (transition sections); (2) bottom inner forging; (3) top forging; (4) inner lid and inner o-ring; (5) vent port coverplate and vent port coverplate inner o-ring; and (6) drain port coverplate and drain port coverplate inner o-ring. For transport without interim storage after loading, either metallic or non-metallic (EPDM or Viton) o-rings may be used in the containment boundary. A detailed discussion of the containment boundary is presented in Chapter 4. As described in Section 7.1.3, for loading of the NAC-STC for immediate shipment, the containment boundary for the inner lid and drain port coverplate are the inner metallic o-rings, rather than the outer o-rings and interseal test plugs. The geometry and the materials of fabrication of the cask components are described in Section 1.2.1 and are shown on the license drawings presented in Section 1.3.2.

The NAC-STC is designed to satisfy the requirements of 10 CFR 71 for the transport of radioactive materials (and the requirements of 10 CFR 72 for the storage of radioactive materials) and the requirements of IAEA TS-R-1. The cask body holds and protects the cask cavity contents for the normal conditions of transport, as well as for the hypothetical accident conditions. The lead located between the inner and outer shells provides the primary gamma radiation shielding for the cask in the radial direction. The cask bottom connects the inner and outer shells, providing for the bottom end closure, as well as both gamma and neutron radiation shielding in the axial direction.

The inner lid, bolts, and o-rings are the primary closure components of the NAC-STC for transport conditions. The outer lid and o-ring provide a secondary closure boundary.

The vent port and the drain port are located in the inner lid and are each protected by a port coverplate. The primary containment boundary at the vent port and at the drain port is the port coverplate and its o-rings. The o-ring is located in the bottom surface of the port coverplate. A second o-ring is also located in the bottom surface of the port coverplate, inside of, and concentric with, the first o-ring.

The forty-two 1 1/2 - 8 UN inner lid bolts are preloaded by an installation torque to restrain rotation of the edge of the inner lid and to maintain a containment seal for the critical load

condition. This condition is a uniformly distributed pressure resulting from the impact of the basket and cavity contents on the inner surface during a top end or top corner impact. The critical design load condition for the inner lid bolts, as listed in Table 2.7.1.6-2, Section 2.7.1.6, is a 54.7 g top corner impact (10 CFR 71 Hypothetical Accident Condition). The critical design load condition for the inner lid is the top end impact, Section 2.7.1.6.

The outer lid is bolted to the top forging by the thirty-six 1 - 8 UNC outer lid bolts, which are installed to a specified torque. The torque provides a total bolt preload that exceeds the maximum applied bolt load for the critical load condition, preventing any lid and o-ring movement that might result in a loss of secondary seal integrity. The critical design load condition for the outer lid bolts, as listed in Table 2.7.1.6-4, Section 2.7.1.6, is a 51.3g side impact (10 CFR 71 Hypothetical Accident Condition). The critical design load condition for the outer lid is the pin puncture accident condition. The NAC-STC outer lid bolts are loaded by the interlid region pressure, the o-ring compression force, and by either the impact limiter crush force during a top end or top corner impact, or by a concentrated center load during a pin puncture impact. The outer lid seal is provided by an o-ring, which is tested by pressurizing the interlid region.

In addition to the main closure, the secondary closure boundary of the NAC-STC also includes the two ports located in the top forging—the interlid port and the pressure port. Each of these ports is protected and sealed by a recessed, bolted port cover with two piston-type (bore seal) PTFE o-rings. The port covers are installed with new o-rings just prior to transport (a slightly different port cover is installed during storage operation). The seal at each port cover is verified by pressure-testing the annulus between the two PTFE o-rings.

The neutron shielding material, NS-4-FR, is a solid synthetic polymer that absorbs the neutron radiation emitted by the cask contents. In addition to the radial neutron shielding along the cask length, neutron shielding is provided in the axial direction at each end of the cask by circular layers of NS-4-FR enclosed in the inner lid and in the cask bottom.

Four external trunnions are welded to the top forging of the NAC-STC at 90-degree intervals around the circumference of the cask. These trunnions are provided for lifting and handling the cask. Either a redundant (four trunnions) or a nonredundant (two trunnions) lifting system may be used. However, each pair of opposing trunnions are conservatively designed to satisfy the heavy lifting requirements of NUREG-0612 for a nonredundant lift, as well as the requirements

of 10 CFR 71.45(a) and paragraph 607 of IAEA TS-R-1. Two rotation trunnion recesses are welded to the bottom outer forging near the bottom of the cask. The neutron shield is cut out to accommodate the placement of the rotation trunnion recesses, which are used to attach the bottom of the cask to the transport vehicle and to rotate the cask from the vertical lifting position to the horizontal position and vice-versa.

As discussed above, two transport impact limiter configurations are used with the NAC-STC cask to limit the impact loads that may act on the cask. The impact limiters absorb the energy of a cask drop impact through the crushing of the wood in the limiters. A balsa impact limiter design must be used when the NAC-STC is transporting spent fuel or GTCC waste in the CY-MPC canister configuration. When transporting directly loaded fuel or the Yankee-MPC canister, either the redwood or balsa impact limiter configuration may be used.

The NAC-STC fuel basket is constructed of stainless steel and has a capacity of 26 PWR fuel assemblies. The fuel basket has a cylindrical shape with a series of support disks that provide lateral support for the square, stainless steel fuel tubes, which encase neutron absorber sheets or plates on each of the four sides. The support disks are separated and supported at 4.87-inch intervals by a threaded rod and spacer nuts at six locations. Aluminum heat transfer disks are located in the central region of the fuel basket and are supported by the six threaded rods and spacer nuts. The stainless steel support disks have adequate strength at the basket temperatures that occur during the transport and/or storage of 26 design-basis PWR fuel assemblies.

For the Yankee Class fuel and GTCC waste, the Yankee-MPC transportable storage canister (canister) serves as the enclosure of the spent fuel assemblies, damaged fuel cans and GTCC waste. The Yankee-MPC canister has a capacity of up to 36 Yankee Class spent fuel elements, or 32 Yankee Class fuel elements and four damaged fuel cans in the four basket corners, or up to 24 loading positions for GTCC waste. Similarly, the CY-MPC canister serves as the enclosure for the Connecticut Yankee spent fuel, damaged fuel cans and GTCC waste. The CY-MPC canister has a capacity of up to 26 Connecticut Yankee spent fuel assemblies or up to 24 containers of GTCC waste. The canister consists of a cylindrical shell with a welded bottom plate, a fuel or GTCC basket, a shield lid and a structural lid. The canister provides leak tight containment of the spent fuel or waste that it holds. This leak tight level of containment is maintained in all of the design basis normal conditions of transport and hypothetical accident conditions. Consequently, it qualifies as the separate inner container required by 10 CFR 71.63(b) for failed or damaged fuel that may be in the canister. The canister is evaluated for normal conditions of transport in Sections 2.6.13 and for hypothetical accident conditions in Section 2.7.11 in the transport configuration.

2.6.15.1 Analysis Description – CY-MPC Canister

The CY-MPC canister contains/confines the spent fuel in the canister fuel basket or the waste in the canister GTCC basket. The canister is the defined confinement boundary for its contents during storage operation and is considered the separate inner container for containment during transport operation; the NAC-STC provides the primary containment boundary for transport. The canister in the transfer cask serves as the handling component for its basket and contents during loading, closure, and transfer from the pool to storage and/or transport.

The canister is a right-circular shell fabricated from rolled 5/8-inch thick, Type 304L stainless steel plate and closed by a circular 1.75-inch thick, Type 304L stainless steel plate that is welded to one end of the shell. The canister is closed at the top end by the installation and welding of the 5-inch thick, Type 304 stainless steel shield lid and the 3-inch thick, Type 304L stainless steel structural lid. The CY-MPC canister encloses the CY basket and contents. The empty canister with basket is handled using lifting rings located on the top end of the basket. The loaded canister is lifted using 6 hoist rings threaded into the top of the structural lid. Type 304L stainless steel was selected for the canister's exterior components based on its enhanced corrosion resistance, especially in the weld regions (refer to Section 2.5.1.3).

The structural design criteria for the canister is the ASME Code Section III, Subsection NB, "Class 1 Components." Consistent with this criteria, the structural components of the canister are shown to satisfy the allowable stress limits presented in Tables 2.1.2-1 and 2.1.2-2 as applicable. The allowable stresses used in this analysis are based on a maximum material temperature of 350°F for all locations in the canister, unless otherwise indicated.

The canister is analyzed using the ANSYS finite element computer program for the 1-foot drop condition in the end and side impact orientations.

The canister structural lid closure weld is specifically evaluated for the normal conditions of transport. The lid weld is identified as Section 8 in Figure 2.6.15.3-1. Either a progressive liquid penetrant examination is performed on the root, each successive 3/8-inch layer, and the final surface of the weld in accordance with the ASME Code, Section V, Article 6, or an ultrasonic examination of the weld is performed in accordance with Section V, Article 5. In accordance with NRC guidance, if a multi-pass liquid penetrant examination is performed on the structural lid closure weld, a weld stress reduction factor of 0.8 is applied to the structural lid to canister shell in accordance with ISG-4, Item 5.

The canister closure weld evaluation for normal conditions is presented in Section 2.6.15.12. The evaluation, which is based on the finite element analysis stress result as shown in Sections 2.6.15.4 through 2.6.15.7, shows a minimum margin of safety of +0.30 for the weld.

Figure 2.6.15.3-1 Identification of the Sections for Evaluating the Linearized Stresses in the CY-MPC Canister

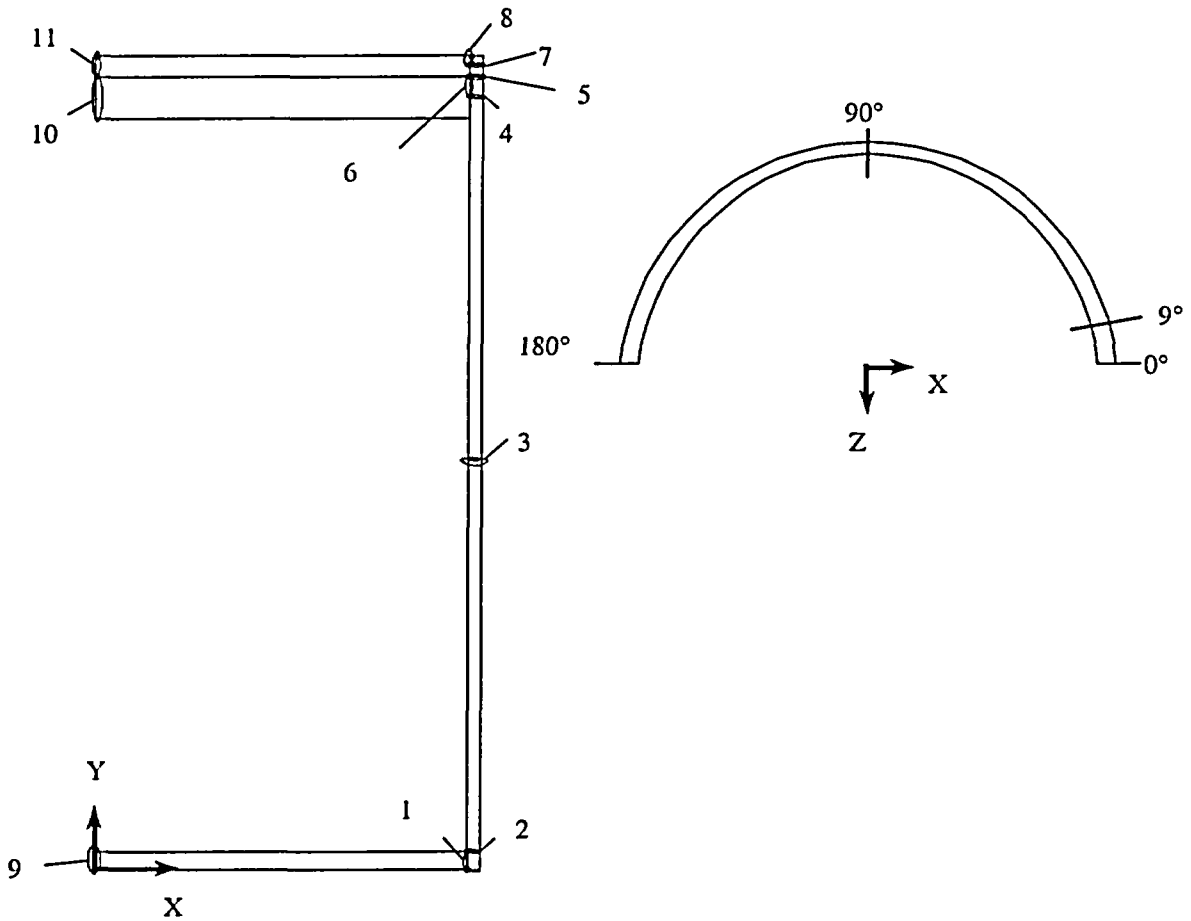

Section	Node 1		Node 2	
	X (inch)	Y (inch)	X (inch)	Y (inch)
1	34.695	0.00	34.695	1.75
2	34.695	1.75	35.32	1.75
3	34.695	72.75	35.32	75.75
4	34.695	148.38	35.320	148.38
5	34.695	148.75	35.320	148.75
6	34.695	148.38	34.695	148.75
7	34.695	151.00	35.320	151.00
8	34.695	151.00	34.695	151.75
9	0.10	0.00	0.10	1.75
10	0.10	143.75	0.10	148.73
11	0.10	148.77	0.10	151.75

Table 2.6.15.3-1 CY-MPC Linearized Stresses - Thermal Only (Condition 2)

Section No.	Q Stresses* (ksi)						S.I. (ksi)
	SX	SY	SZ	SXY	SYZ	SXZ	
1	0	1.0	0	-0.1	0	0	1.1
2	0	0.8	-0.2	-0.1	0	0	1.0
3	-0.1	-0.3	0.8	0	0	0	1.1
4	0.3	-0.3	-0.6	0	0	0.3	1.0
5	-1.7	-0.7	-0.1	-0.1	0	-0.3	1.7
6	-1.7	-0.7	-0.1	-0.1	0	-0.3	1.7
7	0.4	-0.6	-2.3	-0.1	0	0.2	2.7
8	-1.2	-0.3	-0.1	0.1	0	0.1	1.1
9	-16.2	-15.0	-9.7	-0.5	1.0	0.1	6.8
10	1.1	1.0	1.0	0	0.1	0	0.2
11	0.3	0.3	0.1	0	0	0	0.2

* Stresses are in cylindrical coordinate system (x – radial, y – circumferential, z – axial)

2.6.15.4 Stress Evaluation of the CY-MPC Canister for 1-Foot End Drop Load Condition

A structural analysis is performed using ANSYS to evaluate the effect of a 1-foot end drop impact for both the bottom and top end orientations of the canister. The ASME Code, Section III, NB requires the stresses arising from operational loads be assessed based on the primary loads. The primary loads for the 1-foot drop are due to the deceleration of the canister and its contents (65,821 pounds - fuel) and the conservatively assumed 20 psig pressure load internal to the canister. The applied deceleration is 20g for both orientations. The inertial load of the canister was addressed by the deceleration factor applied to the canister density, while the fuel and basket weight (49,155 pounds) was represented by a pressure load on the inner end surface of the canister. Displacement constraints are applied to the plane of symmetry and the gap elements attached at the canister end to represent the top or bottom of the transport cask.

To determine the effect of the 20 psig pressure load, the top end and bottom end drop orientations with and without the pressure load were analyzed. The maximum stresses are summarized below:

Drop Orientation	Internal Pressure (psi)	Maximum Stress Intensity (ksi)
Bottom End Drop	0	4.33
Bottom End Drop	20	2.95
Top End Drop	0	5.37
Top End Drop	20	2.88

The bounding cases are the top and bottom end drops without pressure.

The location of the linearized stresses is shown in Figure 2.6.15.3-1. The maximum stresses for P_m and $P_m + P_b$ are tabulated in Tables 2.6.15.4-2 through 2.6.15.4-5. The critical sections for the pressure and the pressure plus the deceleration load, with reference to the section and the appropriate tables, are shown in Table 2.6.15.4-1.

Table 2.6.15.4-1 Summary of Critical Sections of the Canister for the 1-Foot End Drop Condition

Condition	Stress	Critical Section	Table	Minimum Margin of Safety
Top End Drop Pressure + Inertia	P_m	2	2.6.15.4-4	+ 8.5
Top End Drop Pressure + Inertia	$P_m + P_b$	2	2.6.15.4-5	+ 3.54
Bottom End Drop Inertia	P_m	2	2.6.15.4-6	+ 7.21
Bottom End Drop +Inertia	$P_m + P_b$	5	2.6.15.4-7	+ 4.63

Table 2.6.15.4-2 Top End Drop: 1-ft. Drop + Internal Pressure (0 psi) – Primary Membrane Stresses (ksi)

Section No.	P_m Stresses*						Stress Intensity	S_m Allow. Stress	Margin of Safety
	SX	SY	SZ	SXY	SYZ	SXZ			
1	-0.04	-0.37	-1.05	0.02	0.01	0.16	1.06	16.25	14.33
2	-0.65	1.03	0.69	0.11	-0.01	0.17	1.71	16.25	8.50
3	0.00	0.00	-0.70	0.00	0.00	0.00	0.70	16.25	22.21
4	0.17	-0.03	-1.08	-0.01	-0.01	0.09	1.26	16.25	11.90
5	-0.33	-0.19	-1.18	-0.01	0.00	-0.01	0.99	16.25	15.41
6	-0.11	-0.12	-1.12	0.00	0.01	-0.05	1.02	16.25	14.93
7	0.12	-0.21	-1.52	0.02	-0.01	-0.08	1.65	16.25	8.85
8	0.05	0.04	-0.61	0.00	0.00	-0.04	0.66	13.00**	18.70
9	-0.11	-0.11	0.00	0.00	0.07	-0.07	0.23	16.25	69.65
10	-0.01	-0.05	-0.45	0.00	-0.01	0.03	0.45	16.25	35.11
11	0.05	-0.06	-0.49	0.01	-0.04	0.01	0.54	16.25	29.09

* Stresses are in cylindrical coordinate system (x – radial, y – circumferential, z – axial).

** Includes a stress reduction factor for the weld of 0.8 (See Section 2.6.15.12).

Table 2.6.15.4-3 Top End Drop: 1-ft. Drop + Internal Pressure (0 psi) – Primary Membrane Plus Primary Bending Stresses (ksi)

Section No.	$P_m + P_b$ Stresses*						Stress Intensity	1.5 S_m Allow. Stress	Margin of Safety
	SX	SY	SZ	SXY	SYZ	SXZ			
1	-0.72	0.15	-2.54	-0.04	0.01	0.03	2.70	24.38	8.03
2	-0.35	2.25	4.96	-0.19	0.02	0.36	5.37	24.38	3.54
3	0.00	0.00	-0.70	0.00	0.00	0.00	0.70	24.38	33.83
4	0.09	-0.09	-1.22	-0.01	-0.01	0.12	1.33	24.38	17.33
5	-0.53	-0.35	-1.58	-0.01	0.01	-0.13	1.24	24.38	18.66
6	-0.51	-0.31	-1.44	-0.01	0.01	-0.17	1.16	24.38	20.02
7	0.06	-0.53	-2.65	0.05	0.00	-0.04	2.72	24.38	7.96
8	0.14	0.08	-0.71	-0.01	-0.01	0.06	0.86	19.50**	21.67
9	-3.51	-3.56	0.08	-0.03	0.06	-0.08	3.66	24.38	5.66
10	2.28	2.12	-0.43	0.00	0.00	0.04	2.71	24.38	8.00
11	1.50	1.02	-0.56	0.02	-0.07	0.02	2.06	24.38	10.83

* Stresses are in cylindrical coordinate system (x – radial, y – circumferential, z – axial).

** Includes a stress reduction factor for the weld of 0.8 (See Section 2.6.15.12).

Table 2.6.15.4-4 Bottom End Drop: 1-ft. Drop + Internal Pressure (0 psi) - Primary Membrane Stresses (ksi)

Section No.	P_m Stresses*						Stress Intensity	S_m Allow. Stress	Margin of Safety
	SX	SY	SZ	SXY	SYZ	SXZ			
1	-0.01	-0.11	-0.73	0.01	0.00	-0.02	0.73	16.25	21.26
2	0.15	-0.34	-1.82	0.03	-0.01	-0.06	1.98	16.25	7.21
3	0.00	0.00	-1.72	0.00	0.00	0.00	1.72	16.25	8.45
4	-0.39	-1.03	-1.14	-0.06	0.04	-0.30	0.96	16.25	15.93
5	1.04	-0.58	-0.74	0.12	-0.01	0.17	1.83	16.25	7.88
6	0.49	-0.19	1.19	0.07	-0.06	0.23	1.47	16.25	10.05
7	-1.22	-0.61	0.32	0.03	0.01	-0.14	1.56	16.25	9.42
8*	0.12	-0.70	-1.10	-0.07	0.03	-0.15	1.27	13.00**	9.24
9	0.02	0.02	-0.29	0.00	0.00	0.00	0.31	16.25	51.42
10	0.08	0.08	-0.03	0.00	-0.01	0.01	0.11	16.25	146.73
11	-0.12	-0.12	-0.02	0.00	-0.02	0.01	0.10	16.25	161.50

* Stresses are in cylindrical coordinate system (x – radial, y – circumferential, z – axial).
** Includes a stress reduction factor for the weld of 0.8 (See Section 2.6.15.12).

Table 2.6.15.4-5 Bottom End Drop: 1-ft. Drop + Internal Pressure (0 psi) - Primary Membrane Plus Primary Bending Stresses (ksi)

Section No.	$P_m + P_b$ Stresses*						Stress Intensity	1.5 S_m Allow. Stress	Margin of Safety
	SX	SY	SZ	SXY	SYZ	SXZ			
1	0.03	-0.15	-0.95	-0.01	0.01	-0.10	1.00	24.38	23.38
2	0.06	-0.55	-2.53	0.05	0.00	-0.02	2.60	24.38	8.38
3	0.00	0.00	-1.72	0.00	0.00	0.00	1.72	24.38	13.17
4	-0.27	-1.38	-2.56	0.09	-0.03	-0.43	2.46	24.38	8.91
5	0.39	-1.61	-3.90	0.15	0.01	-0.21	4.33	24.38	4.63
6	1.67	0.36	2.12	-0.10	0.06	0.62	2.21	24.38	10.03
7	-0.61	0.39	3.38	0.07	0.02	-0.19	4.01	24.38	5.08
8*	1.77	0.08	0.40	-0.12	0.02	-0.19	1.73	19.50**	10.27
9	0.03	0.04	-0.30	0.00	-0.01	0.00	0.34	24.38	70.71
10	2.09	2.10	-0.06	0.00	-0.01	0.01	2.16	24.38	10.29
11	-1.36	-1.37	0.03	0.00	-0.02	0.01	1.40	24.38	16.41

* Stresses are in cylindrical coordinate system (x – radial, y – circumferential, z – axial).
** Includes a stress reduction factor for the weld of 0.8 (See Section 2.6.15.12).

2.6.15.5 Stress Evaluation of the Canister for Thermal Plus a 1-Foot End Drop Load Condition

The thermal expansion loads described in Section 2.6.15.3 are added to the canister primary loads in Section 2.6.15.4 to produce a combined thermal expansion plus end impact loading. The stress evaluation is performed according to the ASME Code, Section III, Subsection NB. Based on the results in Section 2.6.15.4, the pressure is included with the inertia loading for the top end drop, but for the bottom end drop, the pressure is not considered. These combinations produce the most critical (smallest) margins of safety. The most critical sections are listed in Table 2.6.15.4-1 for the end drops. The smallest margin of safety reported is +3.54 at section 2. The stress is 5.37 ksi. Conservatively adding the largest thermal stress from Table 2.6.15.3-1 of 6.8 ksi at section 9 results in a total stress of 12.2 ksi. The minimum margin of safety is +3.00 when 3 S_m is used as the stress criteria. It is clear from the table that all of the stress intensities are less than 1.5 S_m, so the stress intensity range criterion of 3.0 S_m is satisfied. The margins of safety are calculated as:

Margin of Safety (MS) = (allowable stress/stress intensity (SI)) -1.

THIS PAGE INTENTIONALLY LEFT BLANK

2.6.15.6 Stress Evaluation of the Canister for a 1-Foot Side Drop Load Condition

The determination of the stresses in the canister due to a 1-foot side drop is accomplished using ANSYS. In the local regions of the lids and bottom plate, the loads are transmitted through the canister shell into the cask body inner shell. Outside of the lid and bottom plate regions, stress develops in the canister shell as a result of the basket loading the canister wall. The basket, canister and cask body have different radii which implies that the contact angle between the components is dependent on the loading. For this reason, the finite element model described in Section 2.6.15.2 contains a half model of the basket. Gap elements between the basket and the canister allow the interface to be dependent on the loading. The interface between the canister and the cask body inner shell is also represented by gap elements.

The load due to the contents is applied to the basket via pressure acting in the plane of the disks. The weight is assumed to act over the effective width of 9.17 inches for the normal slot or 9.57 inches for the oversized slot in which the disk is .5 inches thick. The content weight includes the heat transfer disks (1998 lbs), regular fuel tube (117 lbs.), oversize fuel tube (122.3 lbs), standard fuel weight per tube (1500 lbs.); and the oversized fuel weight per tube (1600 lbs). The actual fuel weight is bounded since the total fuel weight is 35,100 lbs versus 39,400 lbs (1600x4+1500x22 = 39,400 lbs) used in the model. This weight is distributed over the 28 support disks, excluding the two end weldments. A deceleration factor of 20g is applied to the load and the force per unit length for the regular size slot is computed as:

$$(1998/26 + 1500 + 117)(20) / [(9.17)(28)] \text{ psi} = 131.94 \text{ lb/in.}$$

For the oversized slot the force per unit length is:

$$(1998/26 + 1600 + 122)(20) / [(9.57)(28)] \text{ psi} = 134.3 \text{ lb/in.}$$

The 0-degree circumferential orientation of the basket is the configuration that results in the least amount of contact between the canister and cask inner shell and is considered bounding for the side drop. In addition to the contents load, a 20 psig pressure is conservatively applied to the inner surface of the canister.

The methodology used to evaluate the stresses for this condition is taken from Section 2.6.15.4 and the location of the sections are identified in Figure 2.6.15.3-1. The critical section stresses are reported in Table 2.6.15.6-1 and Table 2.6.15.6-2 for P_m and $P_m + P_b$ stresses, respectively. The minimum margin of safety for P_m is +0.24, at Section 6, and for $P_m + P_b$ it is +0.05 at Section 7. The margins of safety are calculated as: M.S. = (allowable stress/S.I.) -1.

Table 2.6.15.6-1 Side Drop: 1-ft. Drop + Internal Pressure (20 psi) - Primary Membrane Stresses (ksi)

Section No.	P_m Stresses*						Stress Instensity	S_m Allow. Stress	Margin of Safety
	SX	SY	SZ	SXY	SYZ	SXZ			
1(0°)	-8.29	-2.96	1.38	0.92	0.10	1.28	10.15	16.25	0.60
2(0°)	3.81	-1.06	2.52	0.61	0.58	0.33	5.21	16.25	2.12
3(0°)	-0.99	1.24	1.20	-0.18	0.00	0.00	2.26	16.25	6.19
4(9°)***	-3.66	-2.30	1.98	0.56	-1.04	-0.39	6.12	16.25	1.66
5(0°)	-1.89	-2.22	1.08	0.08	-0.73	-0.82	3.83	16.25	3.24
6(0°)	-14.51	-5.04	-3.79	0.45	-0.60	-3.56	13.07	16.25	0.24
7(9°)***	-0.06	-1.88	0.81	0.51	-0.90	0.14	3.36	16.25	3.84
8(0-4.5°)**	-12.03	-3.66	-2.63	1.01	-0.68	-0.69	10.02	13.00****	0.30
9	-0.59	0.34	-0.02	0.01	0.00	0.00	0.93	16.25	16.47
10	-0.37	0.09	-0.01	0.00	0.00	-0.02	0.47	16.25	33.57
11	-0.42	0.17	0.00	0.01	0.00	-0.02	0.59	16.25	26.54

* Stresses are in cylindrical coordinate system (x – radial, y – circumferential, z – axial).
** Averaged stress results at 0° and 4.5° section locations.
*** See bearing stress evaluation in Section 2.6.15.9 for sectional stress at 0°.
**** Includes a stress reduction factor for the weld of 0.8 (See Section 2.6.15.12).

Table 2.6.15.6-2 Side Drop: 1-ft. Drop + Internal Pressure (20 psi) – Primary Membrane Plus Primary Bending Stresses (ksi)

Section No.	$P_m + P_b$ Stresses*						Stress Intensity	1.5 S_m Allow. Stress	Margin of Safety
	SX	SY	SZ	SXY	SYZ	SXZ			
1(0°)	-20.14	-5.76	-1.03	0.94	0.04	1.20	19.32	24.38	0.26
2(18°)	0.96	-2.63	-7.13	-0.04	0.24	-0.48	8.16	24.38	1.99
3(0°)	-1.03	2.60	1.57	-0.29	0.00	0.00	3.68	24.38	5.62
4(9°)***	-3.08	-1.48	4.04	-0.07	-1.34	-0.23	7.45	24.38	2.27
5(0°)	-13.07	-4.95	4.66	-0.26	-1.30	-0.95	18.02	24.38	0.35
6(0°)	-20.02	-6.45	-5.20	0.38	-0.98	-3.56	16.87	24.38	0.45
7(9°)***	-17.58	-5.17	5.44	-0.32	-1.28	0.08	23.18	24.38	0.05
8(0-4.5°)**	-16.03	-5.63	-5.62	0.61	-1.03	-1.23	11.75	19.50****	0.66
9	-0.59	0.34	-0.01	0.01	0.00	0.00	0.93	24.38	25.22
10	-1.00	-0.40	0.00	0.01	0.00	-0.02	1.00	24.38	23.38
11	-0.82	-0.15	0.01	0.01	0.00	-0.01	0.83	24.38	28.37

* Stresses are in cylindrical coordinate system (x – radial, y – circumferential, z – axial).
** Averaged stress results at 0° and 4.5° section locations.
*** See bearing stress evaluation in Section 2.6.15.9 for sectional stress at 0°.
**** Includes a stress reduction factor for the weld of 0.8 (See Section 2.6.15.12).

THIS PAGE INTENTIONALLY LEFT BLANK

2.6.15.7 Stress Evaluation of the CY-MPC Canister for Thermal Plus a 1-Foot Side Drop Load Condition

The thermal expansion loads described in Section 2.6.15.3 are added to the canister primary loads in Section 2.6.15.4 to produce a combined thermal expansion plus side impact loading. The stress evaluation is performed according to the ASME Code, Section III, Subsection NB. The most critical sections are listed in Table 2.6.15.6-2 for the side drop. Conservatively adding the thermal stress intensity at each section to the corresponding membrane plus bending stress intensity results in a peak stress of 25.9 ksi at section 7. The minimum margin of safety is +0.88 when 3 S_m is used as the stress criteria. At section 8 with the reduced allowable, the total stress is 12.9 ksi and the margin of safety is +2.02. It is clear from these results that all of the stress intensities are less than 1.5 S_m, so the stress intensity range criterion of 3.0 S_m is satisfied in Section 2.6.7.1. The margins of safety are calculated as:

Margin of Safety (MS) = (allowable stress/stress intensity (SI)) -1.

THIS PAGE INTENTIONALLY LEFT BLANK

2.6.15.8 CY-MPC Canister Shear Stresses for a 1-Foot Side Drop and a 1-Foot End Drop Condition

The evaluation of the maximum shear stress utilizes the membrane values of the stress intensity due to primary loading which were evaluated for the pressure, end drops and side drop loading. The maximum membrane stress intensity is 13.07 ksi for location 6 (Table 2.6.15.6-1). Using a bounding temperature of 350°F, the S_m for Type 304L stainless steel is 16.25 ksi, the margin of safety is determined by:

$$M.S. = (0.6)(16.25)/(13.07/2) - 1$$

$$M.S. = +0.49$$

THIS PAGE INTENTIONALLY LEFT BLANK

2.6.15.9 CY-MPC Canister Bearing Stresses for a 1-Foot Side Drop

The bearing stress of the canister on the cask inner shell is evaluated in the region of the canister lids and over the length of the canister shell. The bearing stress associated with the lids is calculated using the membrane S_x stress at Section 7 (see Figure 2.6.15.3-1). The S_x stress component, associated with the radial direction at the plane of symmetry of the canister, is 20.25 ksi based on the finite element evaluation (Section 2.6.15.6). The bearing stress allowable is S_y for the operational condition, and using a bounding temperature of 220°F, S_y=21.0 ksi, the margin of safety is computed as:

M.S. = (21.0/20.25)-1

M.S. = + 0.04

For the bearing stress acting along the inner shell, an angular contact of 18 degrees is assumed (at a radius of 35.5 inches). In this bearing stress, the lids are not considered to be a contributor. This reduces the contents weight to 65,821-8,663 = 57,158 pounds = 57.2 kips. For a basket length of 124 inches (removing the lengths of both weldments and the first spacer), the margin for the bearing stress is computed as:

S_{br} = (57.2)(20)/[(124)(35.5)(18/57.2958)]
= 0.83 ksi
M.S. = $(18.35/S_{br})$ - 1 = +21

M.S. = + Large

THIS PAGE INTENTIONALLY LEFT BLANK

2.6.15.12 CY-MPC Canister Closure Weld Evaluation – Normal Conditions of Transport

2.6.15.12.1 Stress Evaluation for the CY-MPC Canister Closure Weld

The closure weld for the canister is a partial penetration weld with a leg length of 0.75 inch. The evaluation of this weld, in accordance with NRC guidance, is to incorporate a weld stress reduction factor of 0.8 in accordance with NRC ISG-4, Item 5, to provide conservative consideration of the weld configuration. This stress reduction factor is incorporated by applying a factor of 0.8 to the stress allowable for this weld.

The stresses for the canister are evaluated using sectional stresses as permitted by Subsection NB using the finite element model as described in Section 2.6.15.2. The location of the section for the canister weld evaluation is shown in Figure 2.6.15.3-1 and corresponds to Section 8. The governing P_m, $P_m + P_b$, and P + Q stress intensity for Section 8 for all normal conditions of transport and the associated allowables are listed below. The factored allowables, incorporating a 0.8 stress reduction factor, and the resulting margin of safety are:

Stress Type	Analysis Stress Intensity (ksi)	0.8 x Allowable Stress (ksi)	Margin of Safety
P_m	10.02	13.0	0.30
$P_m + P_b$	11.75	19.5	0.66
P + Q	12.90	39.0	2.02

This confirms that the canister closure weld is acceptable for normal conditions of transport.

2.6.15.12.2 Critical Flaw Size for the Canister Closure Weld

The closure weld for the canister is comprised of multiple weld beads using a compatible weld material for Type 304L stainless steel. An allowable (critical) flaw evaluation has been performed to determine the critical flaw size in the weld region. The result of the flaw evaluation is used to define the minimum flaw size, which must be identifiable in the nondestructive examination of the weld. Due to the inherent toughness associated with Type 304L stainless steel, a limit load analysis is used in conjunction with a J-integral/tearing modulus approach.

The safety margins used in this evaluation correspond to the stress limits contained in Section XI of the ASME Code.

One of the stress components used in the evaluation for the critical flaw size is the radial stress component in the weld region of the structural lid. For the normal operation condition, in accordance with ASME Code Section XI, a safety factor of 3 is required. For the purpose of identifying the stress for the flaw evaluation, the weld region corresponding to Section 8 of Figure 2.6.15.3-1 is considered. The maximum radial tensile stress is 1.0 ksi. To perform the flaw evaluation, a 10 ksi stress is conservatively used, resulting in a significantly larger safety factor than the required safety factor of 3. Using 10 ksi as the basis for the evaluation, the critical flaw size is 0.52 inch for a flaw that extends 360 degrees around the circumference of the canister. Stress components for the circumferential and axial directions are associated with flaws oriented in the radial and horizontal directions, respectively. The maximum stress reported for these components is 0.5 ksi, which is also enveloped by the stress value of 10 ksi for radial stresses. The 360-degree flaw employed for the circumferential direction is considered to be bounding with respect to any partial flaw in the weld, which could occur in the radial and horizontal directions. Therefore, using a minimum detectable flaw size of 3/8 inch is acceptable, since it is less than the very conservatively determined 0.52-inch critical flaw size.

2.7.4 Crush

In accordance with 10 CFR 71.73(c)(2) and IAEA TS-R-1, paragraph 727(c), this test is not applicable to the NAC-STC because the mass of the cask and contents is greater than 500 kilograms (1100 lb) and the cask and contents have an overall density greater than 1000 kilograms/cubic meter (62.4 lbs/ft^3).

THIS PAGE INTENTIONALLY LEFT BLANK

2.7.5 Immersion - Fissile Material

According to the requirements of 10 CFR 71.73(c)(5), a package containing fissile material, where water inleakage has not been assumed for criticality analysis, must be subjected to water pressure equivalent to immersion under a head of water of at least 0.9 meters (3 feet) for a period of not less than 8 hours. This immersion is the fifth test in the Hypothetical Accident sequence of tests for the package. Paragraph No. 733 of IAEA TS-R-1 specifies the same requirements for the international shipment of radioactive materials. A head of water of 0.9 meters (3 feet) is equivalent to an external pressure of (3)(0.433) = 1.3 psig.

The analyses presented in Sections 2.7 through 2.7.3 document that the NAC-STC maintains containment of the package contents for the sequence of Hypothetical Accident tests - free drop, puncture, and fire - that precede the immersion test. The outer lid is shown to be structurally adequate for a maximum external dynamic crush pressure of the top impact limiter of 2376 psi (Section 2.7.1.6). For the 2.65-inch thick outer shell with a mean radius of 42.03 inches, an external pressure of 1.3 psig produces a negligible compressive hoop stress. According to the manufacturer's specifications, the metallic o-rings used in the NAC-STC are adequate for pressures in excess of 5000 psi. Therefore, the NAC-STC satisfies the immersion requirement of 10 CFR 71.73(c)(5) for a package containing fissile material.

The criticality analyses of both the directly loaded fuel configuration and the canistered fuel configuration do assume water inleakage, so containment of the package contents is an additional safety consideration.

THIS PAGE INTENTIONALLY LEFT BLANK

2.7.6 Immersion - All Packages

According to the requirements of 10 CFR 71.73(c)(6), a package must be subjected to water pressure equivalent to immersion under a head of water of at least 15 meters (50 ft) for a period of not less than 8 hours. Paragraph 730 of IAEA TS-R-1 requires that a package be immersed under a head of water of at least 200 meters (656 ft) for a period of not less than 1 hour. A head of water of 200 meters (656 ft) is equivalent to an external pressure of (656)(0.433) = 284 psig. Also, 10 CFR 71.61 requires that a package's undamaged containment system be able to withstand an external water pressure of 290 psi for a period of not less than one hour without collapse, buckling or inleakage of water.

The outer lid is shown to be structurally adequate for a maximum external dynamic crush pressure of the top impact limiter of 2376 psi (Section 2.7.1.6). For the 2.65-inch thick outer shell with a mean radius of 42.03 inches, an external pressure of 290 psig produces a compressive hoop stress of -4599 psi, which is much less than the material yield strength. According to the manufacturer's specifications, the metallic o-rings used in the NAC-STC are adequate for pressures in excess of 5000 psi.

Therefore, the NAC-STC satisfies all of the immersion requirements for a package that is used for the international shipment of radioactive materials.

THIS PAGE INTENTIONALLY LEFT BLANK

The canister structural lid closure weld is specifically evaluated for the hypothetical accident conditions. The lid weld is identified as Section 8 in Figure 2.7.12-1. The structural lid weld has a root and final weld surface Liquid Penetrant examination performed in accordance with ASME Code, Section V, Article 6. The weld is ultrasonically examined in accordance with ASME Code Section V, Article 5, or multi-pass liquid penetrant examined in accordance with ASME Code Section V, Article 6. In accordance with NRC guidance, if a multi-pass liquid penetrant examination is performed on the structural lid closure weld, a weld stress reduction factor is applied to the structural lid canister shell weld – a 0.8 factor to conservatively consider the weld configuration, in accordance with NRC ISG-4, Item 5. Thus, a weld stress reduction factor of 0.8 is applied to the stress allowable for the structural lid weld. The canister closure weld evaluation for accident conditions is presented in Section 2.7.12.4. The evaluation, which is based on the finite element analysis stress result as shown in Section 2.7.12.2, shows a minimum margin of safety of +0.77 for the weld (Section 8).

2.7.12.3 Canister Buckling Evaluation for the 30-Foot End Drop

The canister shell is axially loaded by the weights of the structural lid, the shield lid, and the inertial weight of the shell during a 30-foot end drop impact. The impact load amplification factor is 56.1g's. The shell is evaluated as an unsupported, right circular cylinder using a critical buckling load per Blake, 2nd Edition, "Practical Stress Analysis in Engineering Design."

$$S_{cr} = \frac{E\left(0.605 - 10^{-7} M^2\right)}{M\left(1 + 0.004\phi\right)}$$

$$= 40.3 \text{ ksi}$$

The canister material is Type 304L stainless steel. Conservatively assume the material temperature to be at 400°F for the accident condition.

$E = 26.5E{+}03$ ksi $\quad R = (69.39 + 0.625)/2$

$= 35.01$ inches (mid-radius of the canister shell)

$S_y = 17.5$ ksi $\quad t = 0.625$ inches. (thickness of the canister)

$\phi = E/S_y$ and $M = R/t$

$= 1514.3 \quad = 56.0$

The axial compression load in the canister shell is:

$$P_a = [\ (\pi/4)\ (69.03^2)\ (8)(0.291)\ +\ (\pi/4)(\ 70.64^2\ -\ 69.39^2\ )(151.75)(0.291)\ ]\ (56.1)$$

$$P_a = 829{,}350 \text{ pounds}$$

and the axial compression stress is:

$$S_a = \frac{P_A}{\left(\pi/4\right)\left(70.64^2 - 69.39^2\right)}$$

$$S_a = 6{,}033 \text{ psi}$$

The margin of safety is:

$$(S_{cr}/S_a) - 1 = +\ 5.7$$

2.7.12.4 CY-MPC Canister Closure Weld Evaluation – Accident Conditions

2.7.12.4.1 Stress Evaluation for the CY-MPC Canister Closure Weld

The closure weld for the canister is a partial penetration grooveweld. The evaluation of this weld, in accordance with NRC guidance, incorporates a weld stress reduction factor of 0.8 based on NRC ISG-4, Item 5. The weld stress reduction factor is incorporated by applying a factor of 0.8 to the stress allowable for this weld.

The stresses for the canister are evaluated using sectional stresses as permitted by Subsection NB. The canister stress results from Section 2.7.12.2 are used for evaluation. The location of the section for the canister weld evaluation is shown in Figure 2.7.12-1 and corresponds to Section 8. The P_m and $P_m + P_b$ stress intensity for Section 8 and the associated allowables are listed below. The factored allowables, incorporating a 0.8 stress reduction factor, and the resulting margin of safety are:

Stress Type	Analysis Stress Intensity (ksi)	0.8 x Allowable Stress (ksi)	Margin of Safety
P_m	17.66	31.20	0.77
$P_m + P_b$	21.85	46.80	1.14

This confirms that the canister closure weld is acceptable for the accident conditions.

2.7.12.4.2 Critical Flaw Size for the Canister Closure Weld

The closure weld for the canister is comprised of multiple weld beads using a compatible weld material for Type 304L stainless steel. An allowable (critical) flaw evaluation has been performed to determine the critical flaw size in the weld region. The result of the flaw evaluation is used to define the minimum flaw size, which must be identifiable in the nondestructive examination of the weld. Due to the inherent toughness associated with Type 304L stainless steel, a limit load analysis is used in conjunction with a J-integral/tearing modulus approach. The safety margins used in this evaluation correspond to the stress limits contained in Section XI of the ASME Code.

The stress component used in the evaluation for the critical flaw size is the radial stress component in the weld region of the structural lid. For an accident (Level D) event, in accordance with ASME Code Section XI, a safety factor of $\sqrt{2}$ is required. For the purpose of identifying the stress for the flaw evaluation, the weld region corresponding to Section 8 in Figure 2.7.12-1 is considered. From additional post processing of the tipover analysis, the maximum tensile radial stress is 2.6 ksi. To perform the flaw evaluation, a 10 ksi stress is conservatively used, resulting in a significantly larger safety factor than the required safety factor of $\sqrt{2}$. Using 10 ksi as the basis for the evaluation, the minimum detectable flaw size is 0.52 inch for a flaw that extends 360 degrees around the circumference of the canister. Stress components for the circumferential and axial directions are also determined, which would be associated with flaws oriented in the radial or horizontal directions, respectively. The maximum stress for these components is 0.7 ksi, which is enveloped by the stress value used for the critical flaw evaluation for the radial direction. The 360-degree flaw employed for the circumferential direction is considered to be bounding with respect to any partial flaw in the weld, which could occur in the radial and horizontal directions. Therefore, using a minimum detectable flaw size of 3/8 inch is acceptable, since it is less than the very conservatively determined 0.52-inch critical flaw size.

Figure 2.7.12-1 Identification of the Sections for Evaluating the Linearized Stresses in the CY-MPC Canister

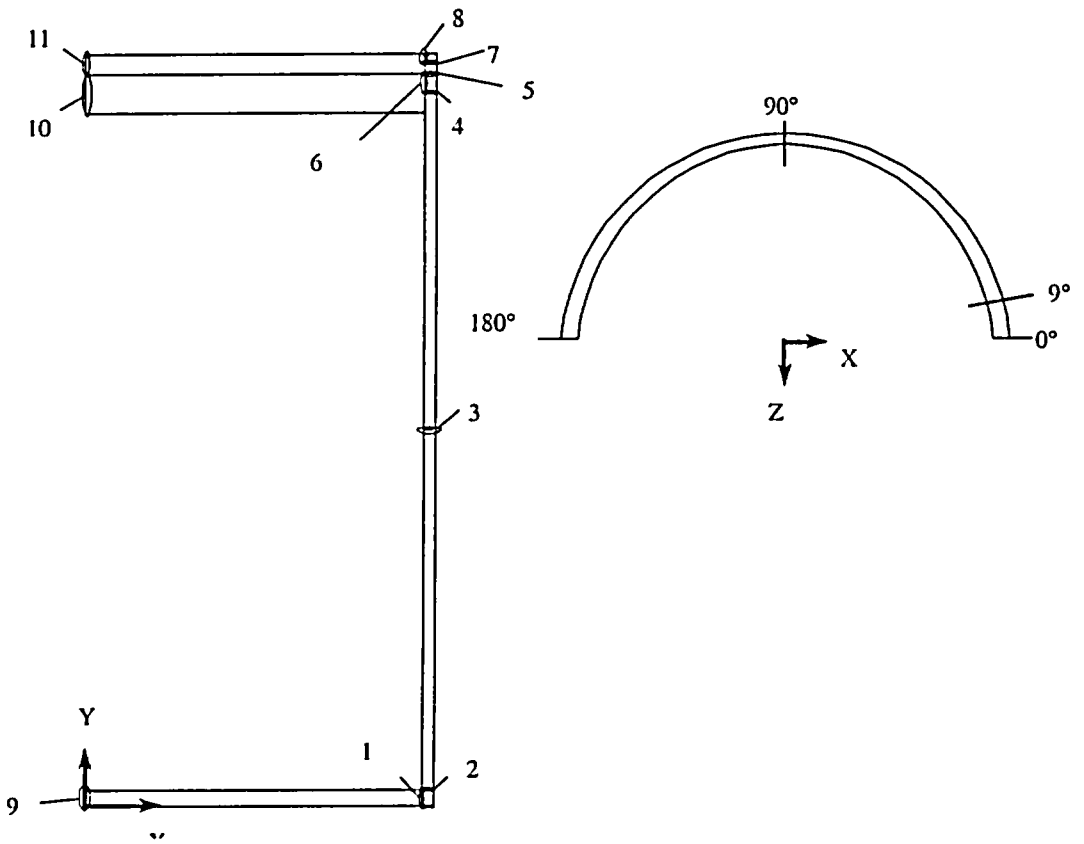

	Node 1		Node 2	
Section	X	Y	X	Y
1	34.695	0.00	34.695	1.75
2	34.695	1.75	35.32	1.75
3	34.695	72.75	35.32	75.75
4	34.695	148.38	35.320	148.38
5	34.695	148.75	35.320	148.75
6	34.695	148.38	34.695	148.75
7	34.695	151.00	35.320	151.00
8	34.695	151.00	34.695	151.75
9	0.10	0.00	0.10	1.75
10	0.10	143.75	0.10	148.73
11	0.10	148.77	0.10	151.75

Table 2.7.12-1 CY-MPC Canister, 30-Foot Side Drop (Primary Membrane Stress) (ksi)

Section No.	Component Stresses*						SI	Allow. Stress	Margin of Safety
	SX	SY	SZ	SXY	SYZ	SXZ			
1(0°)	-13.96	-9.10	0.88	0.82	0.17	0.16	14.99	39.00	1.60
2(9°)	3.87	-4.34	1.58	0.49	1.25	-0.02	8.52	39.00	3.58
3(18°)	-1.15	1.39	2.27	0.00	-0.06	0.00	3.42	39.00	10.40
4(9°)**	-22.60	-8.25	4.42	0.92	-2.24	-2.56	27.94	39.00	0.40
5(0°)	-20.93	-10.55	3.30	-1.33	-1.55	-5.63	27.04	39.00	0.44
6(0°)	-29.89	-13.67	-7.38	-0.93	-1.20	-7.15	26.84	39.00	0.45
7(9)	-31.87	-12.67	1.77	-0.89	-1.56	-0.85	33.89	39.00	0.15
8(0°)	-23.31	-10.15	-6.02	0.29	-0.77	-1.40	17.66	31.20***	0.77
9	-1.90	0.85	0.00	0.04	0.00	-0.02	2.75	39.00	13.18
10	-0.95	0.31	-0.01	0.01	0.00	-0.06	1.26	39.00	29.95
11	-1.22	0.38	0.00	0.02	0.00	-0.03	1.60	39.00	23.38

* Stresses are in cylindrical coordinate system (x-radial, y-circumferential, z-axial).
** Bearing stress (at 0°) is not required to be evaluated for accident condition.
*** Includes a stress reduction factor for the weld of 0.8 (See Section 2.7.12.4).

Table 2.7.12-2 CY-MPC Canister, 30-Foot Side Drop (Primary Membrane Plus Primary Bending Stress) (ksi)

Section No.	Component Stresses*						SI	Allow. Stress	Margin of Safety
	SX	SY	SZ	SXY	SYZ	SXZ			
1(0°)	-24.80	-12.61	0.15	0.54	-0.04	0.76	25.02	58.50	1.34
2(36°)	1.06	-7.15	-15.93	-0.04	-0.46	-0.82	17.09	58.50	2.42
3(0°)	-1.19	2.76	2.63	0.01	-0.06	0.00	3.97	58.50	13.74
4(9°)	-31.79	-11.11	19.66	-2.26	-2.15	-2.67	52.13	58.50	0.12
5(0°)	-19.66	-10.58	9.03	-1.44	-2.00	-2.71	29.65	58.50	0.97
6(0°)	-34.76	-15.39	-8.66	-0.70	-1.44	-5.83	28.82	58.50	1.03
7(9°)	-26.81	-10.15	12.15	-1.49	-1.52	0.53	39.21	58.50	0.49
8(0°)	-34.19	-15.44	-13.48	-0.40	-1.23	-2.57	21.85	46.80**	1.14
9	-1.95	0.88	-0.02	0.04	0.01	-0.02	2.83	58.50	19.67
10	-1.18	0.47	-0.01	0.02	0.00	-0.06	1.66	58.50	34.24
11	-1.36	0.48	0.00	0.03	0.00	-0.03	1.84	58.50	30.79

* Stresses are in cylindrical coordinate system (x-radial, y-circumferential, z-axial).
** Includes a stress reduction factor for the welds of 0.8 (See Section 2.7.12.4).

Table 2.7.12-3 CY-MPC Canister, 30-Foot Bottom End Drop Without Internal Pressure (Primary Membrane Stress) (ksi)

Section No.	Component Stresses*						SI	Allow. Stress	Margin of Safety
	SX	SY	SZ	SXY	SYZ	SXZ			
1	-0.02	-0.30	-2.06	0.02	-0.01	-0.05	2.05	39.00	18.02
2	0.42	-0.95	-5.10	-0.10	0.02	-0.18	5.54	39.00	6.04
3	0.00	0.00	-4.83	0.00	0.00	0.00	4.83	39.00	7.07
4	-1.10	-2.90	-3.18	0.17	-0.10	-0.84	2.70	39.00	13.44
5	2.92	-1.62	-2.08	0.33	-0.03	0.48	5.13	39.00	6.60
6	1.38	-0.53	3.35	0.18	-0.18	0.65	4.11	39.00	8.49
7	-3.41	-1.71	0.89	0.07	0.03	-0.40	4.38	39.00	7.90
8	0.34	-1.97	-3.09	0.20	-0.10	-0.43	3.57	31.20**	7.74
9	0.05	0.06	-0.81	0.00	-0.01	0.01	0.87	39.00	43.83
10	0.24	0.24	-0.07	0.00	-0.02	0.03	0.32	39.00	120.88
11	-0.33	-0.33	-0.07	0.00	-0.05	0.04	0.29	39.00	133.48

* Stresses are in cylindrical coordinate system (x-radial, y-circumferential, z-axial).

** Includes a stress reduction factor for the welds of 0.8 (See Section 2.7.12.4).

Table 2.7.12-4 CY-MPC Canister, 30-Foot Bottom End Drop (Primary Membrane Plus Primary Bending Stress) (ksi)

Section No.	Component Stresses*						SI	Allow. Stress	Margin of Safety
	SX	SY	SZ	SXY	SYZ	SXZ			
1	0.09	-0.42	-2.67	0.04	-0.04	-0.28	2.82	58.50	19.74
2	0.18	-1.54	-7.09	0.13	0.00	-0.06	7.28	58.50	7.04
3	0.00	0.00	-4.83	0.00	0.00	0.00	4.83	58.50	11.11
4	-0.75	-3.87	-7.18	0.25	-0.08	-1.21	6.89	58.50	7.49
5	1.10	-4.51	-10.94	0.41	0.02	-0.60	12.13	58.50	3.82
6	4.67	1.01	5.96	0.29	-0.16	1.75	6.21	58.50	8.42
7	-1.71	1.09	9.49	-0.19	-0.06	-0.54	11.26	58.50	4.20
8	4.98	0.24	1.12	-0.35	0.06	-0.54	4.86	46.80**	8.63
9	0.08	0.11	-0.84	0.00	-0.01	0.01	0.95	58.50	60.58
10	5.87	5.89	-0.17	0.01	-0.02	0.03	6.07	58.50	8.64
11	-3.82	-3.84	0.08	-0.01	-0.05	0.04	3.92	58.50	13.92

* Stresses are in cylindrical coordinate system (x-radial, y-circumferential, z-axial).

** Includes a stress reduction factor for the welds of 0.8 (See Section 2.7.12.4).

Table 2.7.12-5 CY-MPC Canister, 30-Foot Top End Drop (Primary Membrane Stress) (ksi)

Section No.	Component Stresses*						SI	Allow. Stress	Margin of Safety
	SX	SY	SZ	SXY	SYZ	SXZ			
1	-0.12	-1.04	-2.94	0.07	0.02	0.45	2.97	39.00	12.13
2	-1.82	2.88	1.93	-0.32	0.04	0.48	4.80	39.00	7.12
3	0.00	0.00	-1.95	0.00	0.00	0.00	1.95	39.00	19.00
4	0.48	-0.08	-3.02	0.03	0.03	0.27	3.54	39.00	10.02
5	-0.93	-0.53	-3.31	-0.02	0.01	-0.04	2.78	39.00	13.03
6	-0.30	-0.33	-3.14	0.01	-0.04	-0.14	2.85	39.00	12.68
7	0.33	-0.60	-4.27	0.07	-0.02	-0.23	4.63	39.00	7.42
8	0.13	0.12	-1.71	0.00	0.00	-0.13	1.87	31.20**	15.68
9	-0.30	-0.30	0.01	0.00	0.20	-0.21	0.65	39.00	59.00
10	-0.03	-0.13	-1.28	0.00	-0.02	0.09	1.26	39.00	29.95
11	0.13	-0.16	-1.37	0.02	-0.11	0.04	1.51	39.00	24.83

* Stresses are in cylindrical coordinate system (x-radial, y-circumferential, z-axial).

** Includes a stress reduction factor for the welds of 0.8 (See Section 2.7.12.4).

Table 2.7.12-6 CY-MPC Canister, 30-Foot Top End Drop (Primary Membrane Plus Primary Bending Stress) (ksi)

Section No.	Component Stresses*						SI	Allow. Stress	Margin of Safety
	SX	SY	SZ	SXY	SYZ	SXZ			
1	-2.01	0.42	-7.14	-0.13	0.03	0.09	7.57	58.50	6.73
2	-0.99	6.33	13.90	-0.54	0.07	1.00	15.06	58.50	2.88
3	0.00	0.00	-1.95	0.00	0.00	0.00	1.95	58.50	29.00
4	0.26	-0.24	-3.42	0.04	0.02	0.33	3.74	58.50	14.64
5	-1.49	-0.99	-4.42	-0.02	0.02	-0.38	3.48	58.50	15.81
6	-1.44	-0.88	-4.04	-0.04	0.03	-0.48	3.25	58.50	17.00
7	0.18	-1.49	-7.43	0.13	0.00	-0.10	7.62	58.50	6.68
8	0.39	0.21	-2.00	0.00	0.00	0.16	2.42	46.80*	18.34
9	-9.85	-9.99	0.24	-0.08	0.17	-0.21	10.28	58.50	4.69
10	6.40	5.93	-1.20	0.01	-0.01	0.10	7.60	58.50	6.70
11	4.20	2.87	-1.58	0.07	-0.18	0.06	5.79	58.50	9.10

* Stresses are in cylindrical coordinate system (x-radial, y-circumferential, z-axial).

** Includes a stress reduction factor for the welds of 0.8 (See Section 2.7.12.4).

Table 2.7.12-7 Summary of Minimum Margin of Safety for CY-MPC Canister 30-Foot Drops

Drop Orientation	Loading Condition	Stress Evaluated	Minimum Margin of Safety	Section No.*
Bottom end	30-ft. impact + pressure (0 psi)	P_m	6.04	2
Bottom end	30-ft. impact + pressure (0 psi)	$P_m + P_b$	3.82	5
Side	30-ft. impact + pressure (20 psi)	P_m	0.15	7
Side	30-ft. impact + pressure (20 psi)	$P_m + P_b$	0.12	4
Top end	30-ft. impact + pressure (20 psi)	P_m	7.12	2
Top end	30-ft. impact + pressure (20 psi)	$P_m + P_b$	2.88	2

* See Figure 2.7.12-1 for section locations.

Chapter 3

3.0 THERMAL EVALUATION

3.1 Discussion

The NAC-STC is designed to safely transport directly loaded or canistered spent nuclear fuel or canistered Greater Than Class C (GTCC) waste. The cask accommodates up to 26 directly loaded design basis PWR fuel assemblies. In the canistered fuel or waste configurations, the NAC-STC transports the Multi-Purpose Canister (MPC) of the NAC-MPC system, which is designed for the long-term storage and transport of spent fuel. The NAC-MPC is provided in several configurations to provide efficient storage and transport of both spent fuel and GTCC waste. The NAC-MPC canister system designed for Yankee Class fuel is designated the Yankee-MPC and holds up to 36 Yankee Class fuel assemblies, Reconfigured Fuel Assemblies and Recaged Fuel Assemblies, including up to four fuel assemblies loaded in Damaged Fuel Cans. Using a modified internal basket, the same size canister also holds up to 24 containers of Yankee GTCC waste. The NAC-MPC canister system designed for Connecticut Yankee is designated the CY-MPC and holds up to 26 Connecticut Yankee fuel assemblies or, using a modified internal basket, up to 24 containers of Connecticut Yankee GTCC waste. The Yankee-MPC and CY-MPC canisters have the same external diameter, but have different overall lengths.

This chapter demonstrates that the NAC-STC with the design basis payloads meets the thermal performance requirements of 10 CFR 71, Sections 71.71 and 71.73, and the requirements of IAEA TS-R-1.

During normal transport and hypothetical accident conditions, the cask must reject the fuel decay heat to the environment without exceeding the operational temperature ranges of the cask seals or other components important to safety. In addition, fuel rod integrity must be maintained for normal transport conditions. This is accomplished by maintaining the fuel in an inert atmosphere and at a sufficiently low temperature that thermally induced fuel rod cladding deterioration is precluded. For directly loaded fuel, transport temperatures below 380°C are sufficient to deter this type of cladding degradation (PNL-4835/UC-85). The maximum directly loaded fuel rod cladding temperature remains below 380°C under normal transport conditions. For hypothetical accident conditions, temperatures below 570°C are sufficient to prevent Zircaloy cladding degradation (PNL-4835). The directly loaded maximum fuel rod cladding temperature remains below 570°C (1058°F) during the hypothetical accident. For canistered Yankee Class and Connecticut Yankee fuel, the maximum fuel rod cladding temperature under normal transport

conditions remains below 340°C for both stainless steel and Zircaloy-clad fuel. This temperature is low enough to preclude cladding degradation for Zircaloy-clad fuel (PNL-4835) and stainless steel-clad fuel (EPRI-TR-106440). For hypothetical accident conditions, cladding temperatures below 430°C are sufficient to preclude stainless steel cladding degradation (EPRI-TR-106440). This limit is also conservatively applied to Zircaloy-clad fuel. The canistered Yankee Class and Connecticut Yankee fuel maximum fuel rod cladding temperature remains below 430°C during hypothetical accidents. Finally, the thermally induced stresses, in combination with pressure and mechanical load stresses, must be maintained below allowable stress levels.

Heat is transferred from the NAC-STC to the environment by passive means only. No forced cooling is used. Heat is transferred from the fuel assemblies to the fuel basket tubes and through the tubes to the fuel basket support disks and thermal heat transfer disks by conduction, convection, and radiation. Heat is transferred through the fuel basket support disks and thermal heat transfer disks by conduction. Radiation, convection, and conduction are the means by which heat is transferred from the support disks and heat transfer disks to the cask cavity inner wall, or the canister wall. For the canistered fuel configuration, radiation, convection, and conduction transfer heat from the canister wall to the cavity wall. From the cask cavity inner wall, heat is conducted, first through the lead gamma shield and, then through the cask outer shell. The outer shell is surrounded by a neutron shield, which conducts the heat to the neutron shield surface, primarily through the copper/stainless steel fins located within the radial neutron shield. At the top of the cask, heat is conducted through the inner lid, which contains solid neutron shield material, and through the outer lid. There is a very small gap between the lids where the means of heat transfer are conduction, convection, and radiation. The bottom forging and neutron shield conduct the heat to the bottom of the cask. The radial neutron shield stainless steel shell is exposed to the environmental ambient temperature. Heat is removed from the cask radial surface by convection and radiation. Because of the impact limiters, essentially no heat is removed through the ends of the cask. The bounding thermal conditions for the analysis required by 10 CFR 71 and IAEA TS-R-1 under normal transport conditions for the NAC-STC are presented in Table 3.1-1. The combinations of these thermal conditions are described in Section 3.4.

3.1.1 Directly Loaded (Uncanistered) Fuel

The directly loaded design basis fuel assembly has a burnup of 40,000 MWD/MTU and a cool time of 6.5 years. This results in a heat load for 26 assemblies of 22.1 kilowatts, or an individual assembly decay heat limit of 0.85 kilowatts. The thermal analysis for the directly loaded fuel uses

Chapter 4

Table of Contents

4.0 CONTAINMENT 4.1-1

4.1 Containment Boundary 4.1-1
- 4.1.1 Containment Vessel 4.1-2
- 4.1.2 Containment Penetrations 4.1-2
- 4.1.3 Seals and Welds 4.1-3
- 4.1.4 Closure 4.1-4

4.2 Containment Requirements for Normal Conditions of Transport 4.2-1
- 4.2.1 Containment of Radioactive Material 4.2-1
- 4.2.2 Pressurization of Containment Vessel 4.2-2
- 4.2.3 Containment Criterion for Normal Conditions of Transport 4.2-4

4.3 Containment Requirements for Hypothetical Accident Conditions 4.3-1
- 4.3.1 Fission Gas Products 4.3-1
- 4.3.2 Containment of Radioactive Material 4.3-2
- 4.3.3 Calculation of Allowable Leak Rate for Directly Loaded Fuel With Viton O-Rings 4.3-2
- 4.3.4 Containment Criterion for Accident Conditions 4.3-3

4.4 Special Requirements 4.4-1

4.5 Appendix 4.5-1
- 4.5.1 Metallic O-Rings 4.5-1
- 4.5.2 Blended Polytetrafluoroethylene (PTFE) O-Rings 4.5-14
- 4.5.3 Expansion Foam 4.5-18
- 4.5.4 Fiberfrax Ceramic Fiber Paper 4.5-21
- 4.5.5 Viton O-Rings 4.5-27
- 4.5.6 Sample SAS2H Input File 4.5-32

List of Tables

Table 4.1-1 NAC-STC Containment Boundaries 4.1-5
Table 4.1-2 NAC-STC Containment Boundary Welds, Examinations and Tests 4.1-8
Table 4.2-1 Release Fractions: Normal and Accident Conditions 4.2-11
Table 4.2-2 Allowable Release Rate Source and A_2 Values for Directly Loaded PWR Fuel: Normal Conditions 4.2-11
Table 4.2-3 Leak Rate and Leak Test Sensitivity: Normal Conditions 4.2-12
Table 4.2-4 Cask Free Volumes and Pressures: Normal and Accident Conditions 4.2-12
Table 4.2-5 Containment Parameters for Non-Metallic O-Rings in Normal Conditions of Transport 4.2-13
Table 4.2-6 17 X 17 Reference Fuel SAS2H Output and Group A_2 Values - Gases 4.2-13
Table 4.2-7 17 X 17 Reference Fuel SAS2H Output and Group A_2 Values - Volatiles 4.2-13
Table 4.2-8 17 X 17 Reference Fuel SAS2H Output and Group A_2 Values - Fines 4.2-14
Table 4.3-1 Allowable Release Rate Source and A_2 Values for Directly Loaded PWR Fuel: Accident Conditions Using Non-Metallic O-Rings 4.3-4
Table 4.3-2 Standard Leak Rate for Accident Conditions 4.3-4
Table 4.3-3 Containment Parameters for Non-Metallic O-Rings in the Accident Condition 4.3-4

4.0 CONTAINMENT

4.1 Containment Boundary

The NAC-STC transport containment boundary is designed and analyzed to ensure the containment of the cask contents in accordance with 10 CFR 71.51. The containment boundary is designed, fabricated and inspected in accordance with ASME Code Section III, Subsection NB, with the exception of code stamping.

The components of the containment boundary are described in Table 4.1-1 as a function of the containment condition and the contents. The containment conditions are:

- Containment Condition A: The containment boundary for the transport of directly loaded (i.e., no canister) intact PWR spent fuel assemblies following extended storage of the cask at an ISFSI licensed in accordance with 10 CFR 72.

- Containment Condition B: The containment boundary for the transport of: (1) directly loaded intact PWR spent fuel assemblies loaded immediately prior to transport using either metallic or nonmetallic O-rings; or (2) canistered Yankee Class or Connecticut Yankee spent fuel assemblies, Reconfigured Fuel Assemblies, Damaged Fuel Can or GTCC waste loaded into the NAC-STC immediately prior to transport using metallic O-rings.

The NAC-STC containment boundary is designed to permit leak testing of the cask containment boundary penetrations prior to transport to confirm the containment requirement of the contents. The leak test criteria, minimum test sensitivity and leak test methods and locations for each containment condition are described in Table 4.1-1.

4.1.1 Containment Vessel

The primary containment vessel for the NAC-STC consists of a 71.0-inch inside diameter, 1.5-inch thick inner shell, two 1.5-inch to 2.0-inch thick transition sections, a 6.2-inch thick bottom inner forging, and a 7.85-inch thick top forging. The containment vessel components, except for the transition sections, are fabricated from ASME Boiler and Pressure Vessel Code, Type 304 stainless steel nuclear pressure vessel material. The two transition sections are ASME Boiler and Pressure Vessel Code, Type XM-19 stainless steel nuclear pressure vessel material.

The weld examination requirements for the cask body are defined in Table 4.1-2 and are shown on the drawings in Section 1.3.2.

4.1.2 Containment Penetrations

The physical penetrations in the NAC-STC containment vessel are the inner lid and the vent and drain ports in the inner lid. The penetrations are designed to ensure sealing of the containment boundary and to ensure that the leakage from the boundary does not exceed 1×10^{-7} ref cm^3/sec using metallic O-rings and 7.5×10^{-5} ref cm^3/sec using nonmetallic O-rings. The quick-disconnect fittings installed in the vent and drain openings and in the interseal test port in the inner lid are not considered to be part of the containment boundary.

4.1.3 Seals and Welds

4.1.3.1 Seals

The O-rings of the inner lid, the vent port coverplate and the drain port coverplate are the seals that provide primary containment, as described in Section 4.1 and as shown in Table 4.1-1. Section 4.5 contains the specifications that describe the PTFE O-rings of the interlid and pressure port covers and the metallic or nonmetallic O-rings used in the containment boundary and outer

lid. Also included in Section 4.5 are the manufacturer's technical data bulletins for the expansion foam and the Fiberfrax Ceramic Fiber Paper. Leak testing of the cask is performed prior to acceptance from the manufacturer. Leak testing is also performed following fuel loading for either immediate transport or for transport following a storage period. Technical information for Viton O-rings is provided in Section 4.5.5.

4.1.3.1.1 Containment System Fabrication Verification

Upon completion of fabrication, a Containment System Fabrication Verification shall be performed on the cask containment boundary as described in Section 8.1.3. These leak tests verify that the leakage rate of containment components does not exceed the maximum allowable leakage rate of 1×10^{-7} ref cm^3/sec for metallic O-rings or the total leakage rate of containment components does not exceed 7.5×10^{-5} ref cm^3/sec for Viton O-rings. The allowable leak test shall conform to the O-ring design, since the inner and outer lids, and the vent and drain port coverplates must be fabricated using the O-ring groove appropriate to the O-ring design. Metallic O-rings and nonmetallic O-rings cannot be used interchangeably.

4.1.3.1.2 Containment System Verification

The Containment System Verification shall be performed on the NAC-STC package containment boundary seals and components prior to each shipment for packages assembled with metallic O-rings in accordance with the leak test acceptance criteria defined in the procedures in Chapter 8. For cask transport immediately after loading, the leak test shall be performed in accordance with the procedures and acceptance criteria described in Section 7.4.1. For cask shipments following storage, the verification leak test shall be performed in accordance with the procedures and acceptance criteria described in Section 7.4.2.

Whenever a containment component is replaced, the containment component shall be leak tested following replacement using the Containment System Verification (Section 8.2.2.2). This test will verify that the replacement component has been properly installed and that the leakage rate meets acceptance criteria. For packaging using Viton O-rings, the Containment System Verification shall be performed annually, or when a Viton O-ring is replaced, in accordance with the acceptance criteria in Section 8.2.2.2.

4.1.3.2 Welds

The NAC-STC containment vessel is assembled by welding. A list of containment vessel welds, the examinations and tests performed on the welds, and the applicable ASME Code acceptance criteria are provided in Table 4.1-2. The acceptance tests for the NAC-STC are provided in Section 8.1.

4.1.4 Closure

The primary closure assembly for the NAC-STC containment for transport consists of the inner lid, bolts, and O-rings. The inner lid is recessed and bolted into the top forging of the cask body. The 9.0-inch thick, 79.00-inch diameter inner lid is made of SA-336, Type 304 stainless steel. The inner lid is retained by 42 inner lid bolts that are 1 1/2 - 8 UNC socket head cap screws fabricated from SB-637, Grade N07718 nickel alloy steel bolting material. The initial torque for installation of the inner lid bolts is specified in Table 7-1.

The vent port and the drain port are recessed into the inner lid. The vent and drain port coverplates are secured by four 1/2 - 13 UNC bolts fabricated from SA-193, Grade B6, Type 410 stainless steel. Each coverplate is sealed to the inner lid by a metallic or nonmetallic O-ring, with a second, concentric O-ring of the same material, providing an annulus to test the seal.

A secondary closure is provided by the outer lid which provides puncture protection to the primary closure assembly. The 5.25-inch thick, 86.7-inch diameter outer lid is made of SA-705, Type 630, H1150, 17-4 PH stainless steel. The outer lid is retained by 36 outer lid bolts that are 1 - 8 UNC socket head cap screws fabricated from SA-564, Type 630, H1150, 17-4 PH stainless steel. The initial torque for installation of the outer lid bolts is specified in Table 7-1. The bottom surface of the outer lid is sealed to the top forging of the cask body by a metallic or nonmetallic O-ring.

Port covers protect the interlid and pressure ports, which are located in the top forging and access the region between the inner and outer lids. For transport operations, solid port covers with no penetrations are installed in the interlid and pressure ports. These port covers are secured by three 3/8 - 16 UNC bolts, fabricated from SA-193, Grade B6, Type 410 stainless steel material. Each cover is sealed to the cask body by two "piston-type" (bore seal) PTFE O-rings, with a test port located between the O-rings.

Table 4.1-1 NAC-STC Containment Boundaries

Containment Condition	Content Condition	Containment Components	Allowable Test Leakage Rate/Sensitivity	Test Location/Method	Remarks
A Using metallic O-rings	Up to 26 directly loaded intact PWR spent fuel assemblies following storage operations per 10 CFR 72	• Inner shell • Upper and lower shell rings (transition sections) • Bottom inner forging • Top forging • Inner lid • Inner lid outer metallic O-ring • Inner lid interseal test port threaded plug with metallic O-ring • Vent port coverplate • Vent port coverplate outer metallic O-ring • Vent port coverplate interseal port threaded plug with metallic O-ring • Drain port coverplate • Drain port coverplate outer metallic O-ring • Drain port coverplate interseal test port plug with metallic O-ring	• Allowable leakage rate is $\leq 2 \times 10^{-7}$ cm^3/sec (helium) (i.e., leaktight) • Minimum test sensitivity is $\leq 1 \times 10^{-7}$ cm^3/sec (helium)	• Evacuated envelope method (envelope provided by outer lid with test performed through the interlid port) with helium in interseal regions between lid and vent and drain coverplate O-rings	These series of leak tests are performed on the NAC-STC containment boundary following directly loaded fuel storage operations. The outer O-rings are the designated boundary as access to the cask cavity to verify helium backfill conditions is not planned. Testing is performed in accordance with ANSI N14.5 requirements immediately prior to transport.

Table 4.1-1 NAC-STC Containment Boundaries (Continued)

Containment Condition	Content Condition	Containment Components	Allowable Test Leakage Rate/Sensitivity	Test Location/Method	Remarks
B Using metallic O-rings	Up to 26 directly loaded intact PWR spent fuel assemblies for immediate transport, or canistered Yankee Class or Connecticut Yankee spent fuel assemblies, Reconfigured Fuel Assemblies, Damaged Fuel Cans or GTCC waste.	• Inner shell • Upper and lower shell rings transitional sections • Bottom inner forging • Top forging • Inner lid • Inner lid inner O-ring • Vent port coverplate • Vent port coverplate inner O-ring • Drain port coverplate • Drain port coverplate inner O-ring	• Allowable leakage rate is $\leq 2 \times 10^{-7}$ cm^3/s (helium) (i.e., leaktight) for each component test • Minimum test sensitivity is $\leq 1 \times 10^{-7}$ cm^3/s (helium)	• Vent port inner O-ring. • Drain port inner O-ring. • Inner lid inner O-ring. • Tests performed at the interseal test ports with helium in the cask using the evacuated envelope method (envelope provided by the inner and outer O-rings).	Inner O-rings form the containment boundary. Testing is performed in accordance with ANSI N14.5 requirements.

Table 4.1-1 NAC-STC Containment Boundaries (Continued)

Containment Condition	Content Condition	Containment Components	Allowable Test Leakage Rate/Sensitivity	Test Location/Method	Remarks
B Using non-metallic (e.g., Viton) O-rings	Up to 26 directly loaded intact PWR spent fuel assemblies for immediate transport.	• Inner shell • Upper and lower shell rings transitional sections • Bottom inner forging • Top forging • Inner lid • Inner lid inner O-ring • Vent port coverplate • Vent port coverplate inner O-ring • Drain port coverplate • Drain port coverplate inner O-ring	• Allowable leakage rate is $\leq 9.3 \times 10^{-5}$ cm^3/s (helium) for the total of the three leakage tests • Minimum test sensitivity is $\leq 4.7 \times 10^{-5}$ cm^3/s (helium)	• Vent port inner O-ring. • Drain port inner O-ring. • Inner lid inner O-ring. • Tests performed at the interseal test ports with helium in the cask using the evacuated envelope method (envelope provided by the inner and outer O-rings).	Inner O-rings form the containment boundary. Testing is performed in accordance with ANSI N14.5 requirements.

Table 4.1-2 NAC-STC Containment Boundary Welds, Examinations and Tests

Primary Containment Boundary				
Weld Location	**Weld Type**	**ASME Code Category**	**Inspections/Tests**	**ASME Acceptance Criteria**
Inner shell longitudinal and inner shell rings longitudinal	Full Penetration Double Groove	A	VT on Tack Welds VT Final Pass PT Final Pass RT Final Weld Hydrostatic Test Post Hydrostatic Test – PT Helium Leak Test	NB-4424 and NB-4427 NB-5350 NB-4424 and NB-4427 NB-5320 NB-6000 NB-5350 Section V, Art. 10 and ANSI N14.5
Inner shell circumferential	Full Penetration Double Groove	B	VT on Tack Welds VT Final Pass PT Final Pass RT Final Weld Hydrostatic Test Post Hydrostatic Test – PT Helium Leakage Test	NB-4424 and NB-4427 NB-5350 NB-4424 and NB-4427 NB-5320 NB-6000 NB-5350 Section V, Art. 10 and ANSI N14.5
Inner shell to top and bottom inner shell rings circumferential	Full Penetration Double Groove	B	VT on Tack Welds VT Final Pass PT Final Pass RT Final Weld Hydrostatic Test Post Hydrostatic Test – PT Helium Leakage Test	NB-4424 and NB-4427 NB-5350 NB-4424 and NB-4427 NB-5320 NB-6000 NB-5350 Section V, Art. 10; and ANSI N14.5

Table 4.1-2 NAC-STC Containment Boundary Welds, Examinations and Tests (Continued)

Primary Containment Boundary				
Weld Location	**Weld Type**	**ASME Code Category**	**Inspections/Tests**	**ASME Acceptance Criteria**
Top inner shell ring to upper forging, bottom inner shell ring to bottom inner forging, shell-to-shell longitudinal and shell-to-shell circumferential	Full Penetration Double Groove	C	VT on Tack Welds VT Final Pass PT Final Pass RT Final Weld Hydrostatic Test Post Hydrostatic Test – PT Helium Leak Test	NB-4424 and NB-4427 NB-5350 NB-4424 and NB-4427 NB-5320 NB-6000 NB-5350 ANSI N14.5

THIS PAGE INTENTIONALLY LEFT BLANK

4.2 Containment Requirements for Normal Conditions of Transport

The NAC-STC has been designed to safely transport spent fuel assemblies in either of two configurations. The spent fuel assemblies may be sealed in a transportable storage canister (canistered), or loaded directly into a fuel basket installed in the cask cavity.

In the canistered configuration, the NAC-STC can transport Yankee Class or Connecticut Yankee spent fuel and GTCC waste. The NAC-STC in this configuration is designed and tested to leaktight conditions as defined by ANSI N14.5-1997 and, therefore, meets the requirements of 10 CFR 71.51 for containment of radioactive materials.

For directly loaded fuel, a reference 17×17 fuel assembly having a burnup of 60,000 MWD/MTU, an enrichment of 3.5 wt % ^{235}U and a cool time of 5 years is used to establish the source term for the containment analysis. The reference fuel assembly is also used in the shielding analysis and is described in Section 5.1.2. The source term of the reference fuel assembly bounds the licensed inventory as described in Chapter 5. For direct loading for immediate transport or transport after interim storage using metallic O-rings in the containment boundary, the containment boundary is tested to a leaktight condition as defined in ANSI N14.5-1997. For direct loading for immediate transport using Viton O-rings, the containment boundary is tested to 7.5×10^{-5} ref cm^3/sec, or 9.3×10^{-5} cm^3/sec (helium).

4.2.1 Containment of Radioactive Material

The NAC-STC uses one of two O-ring configurations based on the loading condition. For directly loading of fuel for transport without interim storage, the O-rings may be either metallic or Viton. For direct fuel loading for storage, the O-rings must be metallic. For loading of canistered fuel or GTCC waste for transport, the O-rings must also be metallic. For configurations using metallic O-rings, the containment boundary is designed and tested to leaktight conditions as defined by ANSI N14.5-1997. For direct fuel loading for transport without interim storage using Viton O-rings, the allowable leak rate is calculated using the methodology of NUREG/CR-6487. Consequently, the cask meets the requirements of 10 CFR 71.51 for directly loaded and for canistered fuel or GTCC waste.

4.2.2 Pressurization of Containment Vessel

The maximum normal operating pressure in the cask during normal transport conditions is conservatively based on 100% failure of the fuel rods, using the methodology presented in Section 3.4.4. The cask cavity under normal transport conditions is backfilled to one atmosphere with 99.9% pure helium gas. To determine the limiting temperature conditions, it has been assumed that the helium gas could possibly be replaced by air. Therefore, the normal operating pressure is determined for both gas conditions. From Section 3.4.4, the free gas volume, fuel fill gas volume, and fuel fission gas volumes for the two spent fuel configurations are presented below. The GTCC waste does not release any gas. The Reconfigured Fuel Assemblies and Damaged Fuel Cans contain failed fuel. The initial charge gas and any significant fission product gases have already been released from the Reconfigured Fuel Assemblies and from fuel in the Damaged Fuel Cans.

Regulatory Guide 1.25 suggests that 10% of the tritium and 30% of the krypton-85 should be assumed to be released from each failed fuel rod. It is conservatively assumed that 30% of both tritium and krypton-85 escape each failed fuel rod. Other radiologically important gaseous nuclides are present only in negligible amounts after the minimum cooling period for the design basis directly loaded and canistered fuels. The postulated release of other radionuclides, including volatiles, fines, particulates and crud, does not contribute to an increase in internal pressure.

4.2.2.1 Containment Pressurization Due to Directly Loaded Fuel

An increase in pressure within the containment boundary results from an increase in the cask cavity temperature and the postulated failure of 100 percent of the fuel rods in normal conditions of transport (MNOP).

The pressure with air in the cask cavity, based on a conservative bulk air temperature of 450°F (Section 3.4.4), is 4.3 atm (63.2 psia = 48.5 psig). Based on a bulk average gas temperature of 401°F when helium is the cover gas, the pressure in the cask cavity is:

$$P_2 = (4.3)\left(\frac{478}{505}\right) = 4.07\,\text{atm} = 59.8\,\text{psia} = 45.1\,\text{psig}$$

This is less than the containment boundary design pressure of 75 psig.

4.2.2.2 Canister and Cask Pressurization Due to Yankee Class Fuel

The maximum normal operating pressure (MNOP) during transport conditions in the transportable storage canister is calculated in Section 3.4.4, and found to be 3.23 atmospheres, or 32.8 psig. This pressure is conservatively calculated at 450°F, compared to the calculated maximum normal conditions of transport bulk gas temperature of 442°F, and conservatively assumes the rupture of 100% of the fuel rods. The MNOP is below the design pressure of 55 psig. The GTCC waste, Damaged Fuel can contents and Reconfigured Fuel Assemblies classified as failed do not release gases to the canister cavity due to rupture of fuel rods. Consequently, there is no increase in canister internal pressure due to these contents.

Since the canister does not fail in any of the evaluated normal transport or accident conditions, this pressure increase occurs within the canister. There is no pressure increase in the cask cavity except that due to the increase in cavity temperature. As the cask cavity is backfilled to 0 psig, a hypothetical canister failure would result in a containment vessel pressure lower than the canister pressure. Hypothetical canister failure would, therefore, result in significantly lower system pressure than the containment boundary design pressure.

4.2.2.3 Canister and Cask Pressurization Due to Connecticut Yankee Fuel

The MNOP during transport conditions in the transportable storage canister is calculated in Section 3.4.4 and found to be 3.9 atmospheres, or 42.3 psig. This pressure is conservatively calculated at 450°F, compared to the calculated maximum normal conditions of transport bulk gas temperature of 402°F, and conservatively assumes the rupture of 100% of the fuel rods. The MNOP is below the design pressure of 55 psig. As described above, the GTCC waste, Damaged Fuel Can contents and Reconfigured Fuel Assemblies do not release gases to the canister cavity due to failures. Consequently, there is no increase in canister internal pressure due to these contents.

Since the canister does not fail in any of the evaluated normal transport or accident conditions, this pressure increase occurs within the canister. There is no pressure increase in the cask cavity except that due to the increase in cavity temperature. As the cask cavity is backfilled to 0 psig, a hypothetical canister failure would result in a containment vessel pressure lower than the canister pressure. Hypothetical canister failure would, therefore, result in significantly lower system pressure than the containment boundary design pressure.

4.2.3 Containment Criterion for Normal Conditions of Transport

The NAC-STC is designed and tested to meet the containment criteria of 10 CFR 71.51. The 10 CFR 71 limit for the release of radioactive material under normal conditions of transport is 10^{-6} A_2 per hour. The containment criteria are met for the metallic O-ring configuration by testing the NAC-STC to leaktight conditions, as defined by ANSI N14.5-1997, of 1×10^{-7} ref cm^3/sec. This corresponds to a helium leakage rate of 2×10^{-7} cm^3/sec and a test sensitivity of 1×10^{-7} cm^3/sec (helium). The containment criteria are met for the Viton O-ring configuration by testing the NAC-STC to 7.5×10^{-5} ref cm^3/sec (air), which is equivalent to 9.3×10^{-5} cm^3/sec (helium) at a test sensitivity of 4.7×10^{-5} cm^3/sec (helium). The calculation of the allowable leak rate for the Viton O-ring configuration is provided in Section 4.2.3.2.

4.2.3.1 Permissible Release Rate for the NAC-STC with Metallic O-Rings

Metallic O-rings are required to be used in the containment boundary when the cask is directly loaded for long-term storage with subsequent transport, and when the cask is loaded with a transportable storage canister. Metallic O-rings may also be used in the containment boundary when the cask is directly loaded for transport without interim storage. For the metallic O-ring configuration, the containment boundary is tested to leaktight conditions as defined by ANSI N14.5-1997 and, therefore, meets the requirements of 10 CFR 71.51 for containment of the radioactive contents.

Since the cask containment boundary is tested to demonstrate a leaktight condition, an allowable release rate, based on gases, fines, volatiles and particulates that are available for release from the directly loaded spent fuel or GTCC waste in the transportable storage canister, is not calculated.

4.2.3.2 Permissible Release Rate for the NAC-STC with Viton O-Rings

Viton O-rings may be used in the containment boundary when the cask is directly loaded for transport without interim storage. For the Viton O-ring configurations, the containment boundary is tested to 7.5×10^{-5} ref cm^3/sec. As described in this section, this leak rate meets the requirements of 10 CFR 71.51 for containment of the radioactive contents.

The 10 CFR 71.51 limit for the release of radioactive material under normal conditions of transport is 10^{-6} A_2/hr. In this analysis, A_2 for a mixed gas is determined by using the method

described in 10 CFR 71, Appendix A. The release fractions for the various radionuclides transported in the NAC-STC are obtained from NUREG/CR-6487 and summarized in Table 4.2-1. The curie content for gases, volatiles, fines and particulates for the directly loaded 5-year cooled PWR reference fuel assembly is provided in Tables 4.2-6 through 4.2-8.

In addition to the radionuclides produced by the fuel material, fuel assemblies develop a coating of impurities deposited by cooling water during power generation. This coating is known as crud. Crud contains mostly non-radioactive elements but also contains a significant amount of ^{60}Co. NUREG/CR-6487 lists the maximum ^{60}Co concentrations on spent fuel assemblies to be 140 $\mu Ci/cm^2$ for PWR assemblies at initial discharge. The surface area of the reference 17×17 PWR assembly is calculated to be 3.54×10^5 cm^2, based on the assembly characteristics provided in Table 5.2-2.

The maximum permissible leak rate from the cask under normal conditions of transport is determined from the 10 CFR 71 limit of 10^{-6} A_2/hr.

$$R_N = L_N C_N \leq A_2 \text{ x } \cdot 1 \text{x} 10^{-6} \text{hr}^{-1} \text{ or}$$
$$R_N = L_N C_N \leq A_2 \text{ x } \cdot 2.78 \text{x} 10^{-10} \text{sec}^{-1}$$

where:

L_N = Volumetric gas leakage rate [cm^3/s]
C_N = Curies per unit volume (termed "activity density") of the radioactive material that passes through the leak path [Ci/cm^3]
R_N = Release rate for normal transport conditions [Ci/sec]

Activity Density of Radioactive Material (C_N)

The total inventories of fission product gases, volatiles and fines are shown in Table 4.2-6 through Table 4.2-8. These inventories are calculated by using the source terms produced by the SAS2H sequence, the release fractions and the postulated crud (^{60}Co). The ^{60}Co content is decayed 5 years from discharge.

$$C_n = C_{Crud} + C_{Volaties} + C_{FissionGas} + C_{Fines}$$

$$C_{Crud} = \frac{f_C M_T}{V} = \frac{f_C S_C N_A (N_R S_{AR})}{V}$$

where:

C_{crud}	=	Activity density inside containment vessel resulting from crud spallation [Ci/cm^3]
M_T	=	Total crud activity inventory [Ci]
f_c	=	Crud spallation factor
V	=	Free volume inside containment vessel [cm$_3$]
S_C	=	Crud surface activity [Ci/cm^2]
N_R	=	Number of fuel rods per assembly
N_A	=	Number of assemblies
S_{AR}	=	Surface area per rod [cm^2]

and,

$$C_{fines} = \frac{f_F W_R A_R N_R N_A f_B}{V}$$

where:

C_{fine}	=	Activity concentration inside containment vessel resulting from fines released from cladding breaches [Ci/cm^3]
f_F	=	Fraction of fuel rod mass released as fines resulting from cladding breach
f_B	=	Fraction of fuel rods that develop cladding breach
W_R	=	Mass of the fuel in fuel rod [g]
N_R	=	Number of fuel rods per assembly
N_A	=	Number of assemblies
A_R	=	Specific activity of fines emitted from cladding breach in fuel rod [Ci/g]
V	=	Containment vessel void volume [cm^3]

and,

$$C_{vg} = C_{vol} + C_{gas} = \frac{N_R N_A f_B W_R (A_V f_V + A_G f_G)}{V}$$

where:

C_{vg}	=	Releasable activity concentration inside the containment vessel resulting from gases and volatiles released from cladding breaches [Ci/cm^3]
C_{vol}	=	Releasable activity concentration inside the containment vessel resulting from volatiles released from cladding breaches [Ci/cm^3]
C_{gas}	=	Releasable activity concentration inside the containment vessel resulting from gases released from cladding breaches [Ci/cm^3]

W_R	=	Mass of the fuel in a fuel rod [g]
N_R	=	Number fuel rods per assembly
N_A	=	Number of assemblies
f_B	=	Fraction of rods that develop cladding breaches
A_V	=	Specific activity of volatiles in fuel rod [Ci/g]
f_V	=	Fraction of volatiles in fuel rod released if rod develops cladding breach
A_G	=	Specific activity of gas in fuel rod [Ci/g]
f_G	=	Fraction of gas that would escape from fuel rod that develops cladding breach
V	=	Void volume inside containment vessel [cm^3]

Activity Values for Radionuclides

A_2 values used in this analysis (based on 10 CFR 71 Appendix A) are listed in Tables 4.2-6 through 4.2-8 for all radionuclides produced by the SAS2H analysis (plus ^{60}Co). The mixture A_2 value is shown in Table 4.2-2. For those isotopes for which no specific A_2 values are given in 10 CFR 71 Appendix A, the generic values listed in Table A.2 of Appendix A are applied. A_2 values for mixed isotopes are calculated from the following:

$$A_2 = \frac{1}{\sum \frac{F_i}{A_2^i}}$$

where:

$$F_i = \frac{S_i}{S_n}$$

and

F_i = Fraction of isotope i with respect to the entire mixture
S_i = Activity of isotope i [Ci]
S_n = Total group activity [Ci]

Mixture A_2 values are determined for gas, volatile, fine and crud mixtures and are then combined for a total cask mixture A_2 value. Table 4.2-2 provides the source term and A_2 values per group for directly loaded PWR fuel release rate calculations.

Maximum Allowable Leak Rate for Viton O-Rings

On the basis of the methodology described, the maximum allowable volumetric leak rate for PWR fuel directly loaded for immediate transport in normal conditions of transport is calculated to be 7.2×10^{-5} cm^3/sec (Table 4.2-3).

Correlation of Allowable Leak Rates to Air Standard

The volumetric gas leak rate, L, is independent of cask pressure and temperature. The maximum allowable release must be correlated with air standard leak rates, which depend on gas temperatures, pressures, and leakage path length and diameter. This correlation requires calculation of the capillary opening diameter through which the flow occurs. Depending on pressure and condition of the flow, a combination of continuum and molecular flow occurs.

Continuum flow and molecular flow equations are obtained from NUREG/CR-6487, Section 2, which are adjusted to upstream flow rate in accordance with NUREG/CR-6487 and ANSI N14.5-1997. The continuum volumetric flow rate of the gas (cm^3/sec), L_c, is given by:

$$L_c = \frac{2.48\text{x}10^6 D^4}{a\mu}(P_u - P_d) * \frac{P_a}{P_u} = F_c * (P_u - P_d) * \frac{P_a}{P_u}$$

where:

F_c	=	Coefficient for continuum flow [cm^3/atm-s]
D	=	Capillary diameter [cm]
a	=	Capillary length [cm]
μ	=	Fluid viscosity [cP]
P_u	=	Upstream pressure [atm] – pressure inside containment
P_d	=	Downstream pressure [atm] – pressure outside containment
P_a	=	Average pressure $(P_u+P_d)/2$ [atm]

and, the molecular volumetric flow rate of the gas (cm^3/sec), L_m, is given by:

$$L_m = \frac{3.81\text{x}10^3 D^3 \sqrt{\frac{T}{M}}}{aP_a}(P_u - P_d) * \frac{P_a}{P_u} = F_m * (P_u - P_d) * \frac{P_a}{P_u}$$

where:

L_m	=	Volumetric flow rate of gas at P_a [cm^3/sec]
F_m	=	Coefficient for molecular flow [cm^3/atm-s]
D	=	Capillary diameter [cm]

T	=	Gas temperature [K]
M	=	Gas molecular weight [g/mole]
P_a	=	Average pressure $(P_u+P_d)/2$ [atm]
P_u	=	Upstream pressure [atm]
P_d	=	Downstream pressure [atm].
a	=	Capillary diameter [cm]

For this analysis, the gas temperature used for molecular flow analysis is identical to the upstream temperature. Pressure and temperature at normal operating conditions are summarized in Table 4.2-4. Based on the pressure, temperature and allowable leakage rate (L_N), the capillary diameter of the leak is determined. The calculated capillary diameter is then used to determine the air standard leak rate and helium test leak rate. Air standard condition leak rates are determined for air leaking from 1 atmosphere to 0.01 atmosphere at a temperature of 298K. The test gas is helium leaking from 1 atmosphere (0 psig) to a vacuum. Table 4.2-3 provides the reference and test leak rates. The minimum sensitivity for these tests is one-half the air reference leak rate. Key containment analysis parameters are summarized in Table 4.2-5.

This analysis is conservative, since a higher upstream pressure, which could result from a higher average gas temperature based on decay heat, results in a higher allowable leak rate assuming that the leak path length and the leak path diameter (calculated based on the reference air condition) are held constant. Since the test condition pressure cannot be less than 1 atmosphere and the average gas temperature does not have a first order effect on calculated leak rate, the helium test condition is conservative with respect to the allowable reference leak rate.

4.2.3.3 Permissible Release Rate for Canistered Fuel and GTCC Waste

The transportable storage canister welded closure is leak tested at final assembly to leaktight conditions, 1×10^{-7} ref cm^3/ sec, as defined by ANSI N14.5-1997. To meet this requirement, the allowable leak rate is 2×10^{-7} cm^3/sec (helium). The leak test sensitivity applied in testing the canister at the time it is closed is 1×10^{-7} cm^3/sec (helium), or less. Consequently, the canister provides adequate containment for the spent fuel or GTCC waste. For the Yankee-MPC configuration, the allowable leak rate for the canister is specified as 8×10^{-8} cm^3/sec (helium), with a corresponding test sensitivity of 4×10^{-8} cm^3/sec (helium). This specified test condition is conservative with respect to the leaktight condition specified by ANSI N14.5-1997.

Correlation to Air Standard Conditions

The air standard leak rate is 1×10^{-7} ref cm^3/ sec, the leak tight condition as defined by Section 2.1 of ANSI N14.5-1997. Leak testing of the NAC-STC cask and the transportable storage canister is performed using helium gas. The NAC-STC cask leak test is performed using an allowable leak rate of 2×10^{-7} cm^3/sec (helium) with a detection sensitivity of 1×10^{-7} cm^3/sec (helium).

Table 4.2-1 Release Fractions: Normal and Accident Conditions

Radionuclide Origin	Fraction: Normal Conditions	Fraction: Accident Conditions
Volatiles releasable	2.00E-04	2.00E-04
Fission gas releasable	0.3	0.3
Rod mass released	3.00E-05	3.00E-05
Crud spallation factor	0.15	1.0
Fraction of fuel that fails	0.03	1.0

Table 4.2-2 Allowable Release Rate Source and A_2 Values for Directly Loaded PWR Fuel: Normal Conditions

Reference 17x17 PWR Fuel[1]	Crud	Gas	Volatiles	Fines	Total
Total Activity per Assembly (TBq)	N/C[2]	1.79E+02	6.51E+03	9.99E+03	1.67E+04
Releasable Activity per Cask (TBq)	3.71E+00	4.19E+01	1.02E+00	2.34E-01	4.69E+01
Cask Volumetric Activity (TBq /cm^3)	4.98E-07	5.63E-06	1.37E-07	3.14E-08	6.30E-06
A_2 Value (TBq)	0.40	10.49	0.42	0.018	11.33
Fraction of Activity	0.079	0.894	0.022	0.005	1.000
Fraction of Activity / A_2 (1/ TBq)	0.1977	0.0852	0.0512	0.2810	0.6152
Mixture A_2 Value (TBq)					1.63

1. Based on 3% rod failure.
2. Not explicitly calculated.

Table 4.2-3 Leak Rate and Leak Test Sensitivity: Normal Conditions

Contents	O-Rings	Vol. Activity (TBq/cm^3)	Leak Rate (cm^3/sec)		
			Allowable (L)	Air Reference (L_R)	Test Sensitivity
Directly Loaded Reference 17×17 PWR Fuel	Viton	6.3E-06	7.2E-05	7.5E-05[1]	3.8E-05[1]

1. The corresponding helium test leak rates and leak test sensitivities for the directly loaded PWR fuel configuration are 9.3×10^{-5} cm^3/sec and 4.7×10^{-5} cm^3/sec, respectively, at standard conditions.

Table 4.2-4 Cask Free Volumes and Pressures: Normal and Accident Conditions

Contents	Directly Loaded Reference PWR Fuel	
Cask Operating Condition	Normal	Accident[1]
Free Gas Volume (liters)[2]	7440	7540
Pressure (atm)[2]	1.80	5.72
Average Gas Temperature (K)	505.0	675.0

1. The accident condition for this analysis is 100% rod failure in combination with a fire accident that raises the cask temperature. This hypothetical dual-failure accident conservatively maximizes both available releasable material and cask pressure.
2. Bounding values were chosen for free volume (minimum) and pressure (maximum). This conservatively minimizes free volume and capillary diameter.

Table 4.2-5 Containment Parameters for Nonmetallic O-Rings in Normal Conditions of Transport

Contents	Containment Free Volume (cm^3)	Capillary Length (cm)	Capillary Diameter (cm)	Upstream Pressure (atm)	Gas Temperature (K)
Reference 17×17 PWR Fuel	7.44E+6	0.597	8.6E-4	1.80	505

Note: Based on 3% of the fuel rods failing in normal transport conditions.

Table 4.2-6 17×17 Reference Fuel SAS2H Output and Group A_2 Values – Gases

Isotope	Activity/Assembly (TBq)	Fraction of Source	Isotope A_2 Value (TBq)	Isotope Fraction/A_2 (1/TBq)	Group A_2
H3	1.12E+01	6.24E-02	4E+01	1.559E-03	
I129	1.01E-03	5.64E-06	1E+60	5.638E-66	
KR85	1.68E+02	9.38E-01	1E+01	9.376E-02	
Total	1.79E+02			9.53E-02	10.491

Table 4.2-7 17×17 Reference Fuel SAS2H Output and Group A_2 Values – Volatiles

Isotope	Activity/Assembly (TBq)	Fraction of Source	Isotope A_2 Value (TBq)	Isotope Fraction/A_2 (1/TBq)	Group A_2
CS134	1.23E+03	1.89E-01	7E-01	2.695E-01	
CS135	1.24E-02	1.90E-06	1E+00	1.903E-06	
CS137	2.95E+03	4.52E-01	6E-01	7.538E-01	
RU106	5.59E+02	8.58E-02	2E-01	4.290E-01	
SR90	1.78E+03	2.73E-01	3E-01	9.110E-01	
Total	6.51E+03			2.36E+00	0.423

Table 4.2-8 17×17 Reference Fuel SAS2H Output and Group A_2 Values – Fines

Isotope	Activity/Assembly (TBq)	Fraction of Source	Isotope A_2 Value (TBq)	Isotope Fraction/A_2 (1/TBq)	Group A_2
AG108	4.40E-05	4.41E-09	2E-02	2.20E-07	
AG108M	5.03E-04	5.04E-08	7E-01	7.20E-08	
AG109M	4.51E-06	4.52E-10	2E-02	2.26E-08	
AG110	1.78E-02	1.78E-06	2E-02	8.89E-05	
AG110M	1.31E+00	1.31E-04	4E-01	3.27E-04	
AM241	2.58E+01	2.58E-03	1E-03	2.58E+00	
AM242	2.47E-01	2.47E-05	2E-02	1.24E-03	
AM242M	2.48E-01	2.48E-05	1E-03	2.48E-02	
AM243	1.55E+00	1.55E-04	1E-03	1.55E-01	
BA137M	2.78E+03	2.78E-01	2E-02	1.39E+01	
BI212	1.85E-03	1.86E-07	6E-01	3.09E-07	
BK249	2.18E-04	2.18E-08	3E-01	7.26E-08	
C 14	3.63E-06	3.63E-10	3E+00	1.21E-10	
CD109	4.51E-06	4.52E-10	2E+00	2.26E-10	
CD113M	1.02E+00	1.02E-04	5E-01	2.04E-04	
CE144	2.61E+02	2.61E-02	2E-01	1.31E-01	
CF249	3.12E-05	3.12E-09	8E-04	3.90E-06	
CF250	1.25E-04	1.25E-08	2E-03	6.26E-06	
CF251	1.55E-06	1.55E-10	7E-04	2.21E-07	
CF252	1.92E-04	1.92E-08	3E-03	6.41E-06	
CM242	1.01E+00	1.01E-04	1E-02	1.01E-02	
CM243	1.18E+00	1.19E-04	1E-03	1.19E-01	
CM244	2.87E+02	2.88E-02	2E-03	1.44E+01	
CM245	3.52E-02	3.52E-06	9E-04	3.91E-03	
CM246	2.19E-02	2.20E-06	9E-04	2.44E-03	
CM248	1.46E-06	1.46E-10	3E-04	4.87E-07	
EU152	8.73E-02	8.74E-06	1E+00	8.74E-06	
EU154	3.02E+02	3.02E-02	6E-01	5.03E-02	
EU155	1.44E+02	1.44E-02	3E+00	4.79E-03	
GD153	4.11E-03	4.11E-07	9E+00	4.57E-08	
HO166M	6.22E-05	6.22E-09	9E-05	6.91E-05	
NB 93M	9.07E-03	9.08E-07	3E+01	3.03E-08	
NB 94	2.98E-06	2.99E-10	7E-01	4.27E-10	
NB 95	1.59E-04	1.59E-08	1E+00	1.59E-08	
NP235	7.03E-05	7.04E-09	4E+01	1.76E-10	
NP236	2.08E-06	2.08E-10	2E-02	1.04E-08	
NP237	1.04E-02	1.04E-06	2E-03	5.22E-04	
NP238	1.11E-03	1.12E-07	2E-02	5.58E-06	
NP239	1.55E+00	1.55E-04	4E-01	3.87E-04	

Table 4.2-8 17×17 Reference Fuel SAS2H Output and Group A_2 Values – Fines (Continued)

Isotope	Activity/Assembly (TBq)	Fraction of Source	Isotope A_2 Value (TBq)	Isotope Fraction/A_2 (1/TBq)	Group A_2
PA233	1.04E-02	1.04E-06	7E-01	1.49E-06	
PA234	6.88E-06	6.89E-10	2E-02	3.45E-08	
PA234M	5.29E-03	5.30E-07	2E-02	2.65E-05	
PB212	1.85E-03	1.86E-07	2E-01	9.28E-07	
PD107	4.70E-03	4.70E-07	1E+60	4.70E-67	
PM145	4.88E-03	4.89E-07	1E+01	4.89E-08	
PM146	8.77E-02	8.78E-06	2E-02	4.39E-04	
PM147	8.03E+02	8.04E-02	2E+00	4.02E-02	
PO212	1.19E-03	1.19E-07	9E-05	1.32E-03	
PO216	1.85E-03	1.86E-07	9E-05	2.06E-03	
PR144	2.61E+02	2.61E-02	2E-02	1.31E+00	
PR144M	3.65E+00	3.65E-04	2E-02	1.83E-02	
PU236	2.23E-02	2.23E-06	3E-03	7.43E-04	
PU238	1.42E+02	1.42E-02	1E-03	1.42E+01	
PU239	5.70E+00	5.70E-04	1E-03	5.70E-01	
PU240	1.19E+01	1.19E-03	1E-03	1.19E+00	
PU241	2.52E+03	2.53E-01	6E-02	4.21E+00	
PU242	9.32E-02	9.34E-06	1E-03	9.34E-03	
RA224	1.85E-03	1.86E-07	2E-02	9.28E-06	
RH102	2.08E-02	2.08E-06	5E-01	4.16E-06	
RH106	5.59E+02	5.59E-02	2E-02	2.80E+00	
RN220	1.85E-03	1.86E-07	9E-05	2.06E-03	
SB125	6.70E+01	6.71E-03	1E+00	6.71E-03	
SB126	2.74E-03	2.74E-07	4E-01	6.85E-07	
SB126M	1.96E-02	1.96E-06	2E-02	9.80E-05	
SE 79	1.99E-03	2.00E-07	2E+00	9.98E-08	
SM145	1.24E-03	1.24E-07	1E+01	1.24E-08	
SM151	8.62E+00	8.63E-04	1E+01	8.63E-05	
SN119M	2.43E-02	2.44E-06	3E+01	8.13E-08	
SN121	6.07E-02	6.08E-06	2E-02	3.04E-04	
SN121M	7.81E-02	7.82E-06	9E-01	8.68E-06	
SN123	6.81E-04	6.82E-08	6E-01	1.14E-07	
SN126	1.96E-02	1.96E-06	4E-01	4.90E-06	
TC 99	3.70E-01	3.70E-05	9E-01	4.12E-05	
TE123M	1.48E-05	1.48E-09	1E+00	1.48E-09	
TE125M	1.64E+01	1.64E-03	9E-01	1.82E-03	
TE127	2.98E-03	2.99E-07	7E-01	4.27E-07	
TE127M	3.05E-03	3.05E-07	5E-01	6.10E-07	
TH228	1.85E-03	1.85E-07	1E-03	1.85E-04	

Table 4.2-8 17×17 Reference Fuel SAS2H Output and Group A_2 Values – Fines (Continued)

Isotope	Activity/Assembly (TBq)	Fraction of Source	Isotope A_2 Value (TBq)	Isotope Fraction/A_2 (1/TBq)	Group A_2
TH231	8.58E-05	8.59E-09	2E-02	4.30E-07	
TH234	5.29E-03	5.30E-07	3E-01	1.77E-06	
TL208	6.66E-04	6.67E-08	2E-02	3.33E-06	
TM171	1.90E-05	1.90E-09	4E+01	4.75E-11	
U232	2.70E-03	2.70E-07	9E-05	3.00E-03	
U233	3.63E-07	3.64E-11	6E-03	6.06E-09	
U234	2.56E-03	2.56E-07	6E-03	4.27E-05	
U235	8.58E-05	8.59E-09	1E+60	8.59E-69	
U236	5.37E-03	5.37E-07	6E-03	8.95E-05	
U237	6.03E-02	6.04E-06	2E-02	3.02E-04	
U238	5.29E-03	5.30E-07	1E+60	5.30E-67	
Y 90	1.78E+03	1.78E-01	3E-01	5.94E-01	
Y 91	6.62E-06	6.63E-10	6E-01	1.11E-09	
ZR 93	3.33E-02	3.33E-06	1E+60	3.33E-66	
ZR 95	6.99E-05	7.00E-09	8E-01	8.75E-09	
Total	9.99E+03			5.64E+01	0.018

4.3 Containment Requirements For Hypothetical Accident Conditions

The NAC-STC has been designed to safely transport 26 design basis directly loaded PWR fuel assemblies, or canistered spent fuel or GTCC waste in either the Yankee-MPC or Connecticut Yankee-MPC configurations. The structural integrity of the cask containment during hypothetical accident conditions is demonstrated in Section 2.7. Therefore, the cask containment is maintained under hypothetical accident conditions. As described in Section 2.7.11, the transportable storage canister does not fail in any of the evaluated transport accident conditions defined in 10 CFR 71.73. Consequently, its leaktight condition is maintained in the hypothetical accident conditions. As described in Section 4.1, metallic O-rings are required to be used for the direct loading of fuel for long-term storage and subsequent transport and for the transport of transportable storage canisters. Either metallic or Viton O-rings may be used for spent fuel that is directly loaded for transport without interim storage.

For direct loading for transport without interim storage using Viton O-rings, the containment boundary requirement under hypothetical accident conditions is met by ensuring that a leak rate limit of 5.9×10^{-3} ref·cm^3/sec is not exceeded. Calculation of this limit is provided in Section 4.3.2.

For directly loaded fuel, assuming a simultaneous occurrence of a fire accident and a 100% rod failure, and on the basis of a bulk average gas temperature of 675K resulting from air in the cavity, the pressure within the cask cavity is calculated to be 5.72 atm. The hypothetical presence of air in the cask provides an upper bound on the gas temperature. This pressure represents the maximum possible cask internal pressure. While fuel could fail within the transportable storage canister, no release from the canister occurs.

4.3.1 Fission Gas Products

The calculated amounts of fission gases contained by the design basis directly loaded and canistered PWR fuel assemblies for both normal and hypothetical accident conditions are reported in Section 4.2.2. The accident conditions assume a 100% fuel rod failure with 30% of the available tritium and 30% of the available krypton-85 being released to the cask cavity or to the canister. These gases contribute to an increase in the cask cavity pressure due to the postulated failure of the directly loaded, intact fuel and to an increase in the canister pressure due to the postulated failure of the canistered fuel.

Other released radionuclides, including crud, volatiles, fines and particulates, are not assumed to contribute to an increase in internal pressure of either transport configuration. The GTCC waste does not contain any gaseous products and does not have a failure mode in the hypothetical accident conditions. Consequently, there is no increase in pressure due to the GTCC contents.

The release of material from the postulated failure of the intact fuel assemblies bounds the possible release of material from the Reconfigured Fuel Assemblies and Damaged Fuel Cans since the allowable contents of these components is less than or equal to that of an intact fuel assembly.

4.3.2 Containment of Radioactive Material

For directly loaded fuel intended for transport without interim storage using metallic O-rings, the containment boundary is tested to a leaktight condition as defined in ANSI N14.5-1997. As shown in Section 2.7 for the NAC-STC cask and in Section 2.7.11 for the transportable storage canister, the containment boundary of the cask and canister do not fail during the hypothetical accident events. Consequently, leaktight containment is maintained by both the cask and the canister in the hypothetical accident events. For the Viton O-ring configuration, the allowable leak rate in the hypothetical accident condition is 5.9×10^{-3} cm^3/sec, as shown in Section 4.3.3. The radionuclide activities for the reference PWR fuel assembly are provided in Section 4.2.3.

4.3.3 Calculation of Allowable Leak Rate for Directly Loaded Fuel with Viton O-Rings

The allowable leak rates under hypothetical accident conditions are calculated by using the method described in Section 4.2.1.1 for normal conditions of transport. The total inventories of fission product gases, volatiles, fines and crud are calculated by using the source terms generated by SAS2H, using the release fractions. Using the A_2 values from 10 CFR 71, Appendix A (Table 4.3-1), the mixture A_2 values are determined for gas, volatile, fine and crud mixtures. Finally, the maximum allowable release rates are calculated by using the hypothetical accident conditions allowable release limit:

$$R_A = L_A C_A \leq A_2 \cdot \text{per week}$$

or

$$R_A = L_A C_A \leq 1.65\text{x}10^{-6}\ A_2 \text{ per sec}$$

where:

L_A = Volumetric gas leakage rate [cm^3/sec]

C_A = Curies per unit volume (termed "activity density") of the radioactive material that passes through the leak path [Ci/cm^3]

R_A = Release rate for accident transport conditions

The assumptions applied to the calculations for the hypothetical accident conditions are that 100% of the fuel rods fail and that 100% of the assumed crud is released. The gas, volatile, fine and crud mixture A_2 is not affected by the change in the magnitude of releasable material. However, the combined A_2 changes based on the change in activity fraction in each group.

The calculated maximum permissible release rate for the reference directly loaded PWR fuel under hypothetical accident conditions using Viton O-rings is tabulated in Table 4.3-2.

Correlation of Allowable Leak Rates to Air Standard

The maximum allowable leak rate for the hypothetical accident conditions is correlated with the standard leak rate by using the methodology described in Section 4.2.1.2. The results for the reference PWR fuel loaded for transport without interim storage, using Viton O-rings, are shown in Table 4.3-2.

4.3.4 Containment Criterion for Accident Conditions

The containment criteria of 10 CFR 71 limits the release rate in accident conditions to A_2 per week. The NAC-STC cask using metallic O-rings is designed and tested to leaktight conditions as defined in Section 2.1 of ANSI N14.5-1997. The allowable leak rate calculated for the Viton O-ring configuration in the hypothetical accident conditions is much greater than that allowed under the normal conditions of transport. Consequently, the cask meets the regulatory containment criterion for the hypothetical accident conditions in either the metallic O-ring or nonmetallic O-ring configuration.

Table 4.3-1 Allowable Release Rate Source and A_2 Values for Directly Loaded PWR Fuel: Accident Conditions Using Nonmetallic O-Rings

17×17 Reference	Crud	Gas	Volatiles	Fines	Total
Total Activity per Assembly (TBq)	N/C[1]	1.79E+02	6.51E+03	9.99E+03	1.67E+04
Releasable Activity per Cask (TBq)	2.47E+01	1.40E+03	3.39E+01	7.79E+00	1.46E+03
Cask Volumetric Activity (TBq/cm^3)	3.28E-06	1.85E-04	4.49E-06	1.03E-06	1.94E-04
A_2 Value (TBq)	0.40	10.49	0.42	0.02	11.33
Fraction of Activity	0.017	0.955	0.023	0.005	1.000
Fraction of Activity / A_2 (1/TBq)	0.0422	0.0910	0.0547	0.3000	0.4879
		Mixture A_2 Value (TBq)			2.05

1. Not explicitly calculated.

Table 4.3-2 Standard Leak Rate for the Accident Condition

Contents	O-Rings	Vol. Activity (TBq/cm^3)	Leak Rate (cm^3/sec)	
			Allowable (L)	Air Reference (L_R)
Directly Loaded Reference 17×17 PWR Fuel	Viton	1.9E-04	1.7E-02	5.9E-03

Table 4.3-3 Containment Parameters for Non-Metallic O-Rings in the Accident Condition

Contents	Containment Free Volume (cm^3)	Capillary Length (cm)	Capillary Diameter (cm)	Upstream Pressure (atm)	Gas Temperature (K)
Reference 17×17 PWR Fuel	7.54E+6	0.597	2.6E-3	5.72	675

Note: 100 % of the fuel rods are postulated to fail in the accident condition.

4.4 Special Requirements

The NAC-STC meets the requirements of 10 CFR 71.63, which requires that shipments containing plutonium must be made with the contents in solid form for greater than 0.74 TBq (20 Ci) of plutonium.

THIS PAGE INTENTIONALLY LEFT BLANK

Chapter 5

5.0 SHIELDING EVALUATION

The NAC-STC uses an optimized multiwall design to provide the most efficient shielding arrangement possible, and to comply with 10 CFR 71 limits. This chapter provides a description of the NAC-STC shield design, design basis contents for the shielding evaluation, and the conservative shielding analyses used to determine the transport dose rates.

The NAC-STC is designed to safely transport spent fuel assemblies in two configurations: directly loaded and canistered. In the directly loaded configuration, standard PWR fuel assemblies are placed directly into a fuel basket installed in the cask cavity. In the canistered configuration, a sealed transportable storage canister loaded with fuel assemblies is placed in an empty cask cavity with top and bottom spacers. In the directly loaded configuration, the NAC-STC can transport up to 26 standard PWR fuel assemblies. In the canistered configuration, the NAC-STC can transport up to 36 Yankee Class fuel assemblies in the Yankee-MPC configuration or up to 26 Connecticut Yankee fuel assemblies in the CY-MPC configuration.

For directly loaded fuel, the shielding evaluation considers reference fuel assemblies in 14×14, 15×15, 16×16 and 17×17 array sizes. The reference fuel assemblies have parameters selected from all of the fuel assemblies of the same array size to maximize the shielding source terms. The design basis fuel for the canistered configuration is the Yankee Class, Combustion Engineering, Type A, 16×16 PWR fuel assembly.

The NAC-STC can also safely transport Greater Than Class C (GTCC) waste in a canistered configuration. The Yankee Class GTCC waste consists primarily of activated steel sections or components, but may also include Zircaloy items. Core baffle sections and dross material are placed in a fuel assembly-sized container, as shown in Figure 5.1-4. Some stainless steel and Zircaloy items may be loaded directly into an interior GTCC loading position. The Connecticut Yankee GTCC waste, also consisting of activated steel, is also placed in a fuel assembly-sized can. The Yankee-MPC and CY-MPC GTCC canisters have 24 loading positions for GTCC waste.

The NAC-STC is assigned a nominal Transport Index of 21 (TI = 21) based on the requirement of 10 CFR 71.4 and the analysis results presented in Section 5.1.4. The maximum dose rate at 1 meter from the NAC-STC in normal conditions of transport is 20.3 mrem per hour, based on the directly loaded reference fuel. The actual measured dose rate is expected to be less.

The shielding evaluation for directly loaded fuel, canistered fuel and GTCC waste demonstrates compliance with 10 CFR 71 limits. The dose rates for both the canistered Yankee Class fuel and GTCC waste, and Connecticut Yankee Class fuel and GTCC waste, are shown to be significantly less than those for the directly loaded fuel configuration for both normal and accident conditions.

The shielding evaluation of the directly loaded configuration is performed using the SAS2H sequence (Hermann, 1995) of the SCALE-4.3 package for the PC (ORNL, 1995). This sequence uses the computer code ORIGEN-S (Hermann, 1989) to calculate the source terms. The MCBEND (AEA Technology, 2000) computer code is used to calculate the cask dose rates for normal transport and hypothetical accident conditions. The shielding analyses show that the dose rates are below regulatory limits.

The shielding evaluation of the Yankee Class canistered fuel and GTCC waste is performed using SCALE 4.3 for the PC (ORNL, 1995). This code uses SAS2H (Herman, 1995) to calculate source terms. One-dimensional shielding evaluations were performed using SAS1 (Knight, 1995). The shielding analyses show that the dose rates are well below the regulatory limits stated in 10 CFR 71 and are well below the dose rates reported for the design basis directly loaded fuel.

The shielding evaluation of the Connecticut Yankee canistered fuel and GTCC waste is performed using the MCBEND Monte Carlo transport code. Fuel source terms are developed using the SCALE isotopics sequence SAS2H (Herman, 1995).

Directly Loaded Fuel

The directly loaded basket construction is based on a tube and disk design. PWR fuel is loaded into 26 fuel tubes fabricated from Type 304 stainless steel sheets. BORAL or TalBor neutron absorber is encased in stainless steel on the outside face of the fuel tube. Twenty 5/8-inch thick aluminum disks are spaced between thirty-three 1/2-inch thick Type 17-4 PH stainless steel support disks to provide heat transfer. Radial shielding of PWR fuel in the directly loaded basket is provided by the multi-wall design of the NAC-STC cask body. Axial shielding is provided by the cask body closure lids and end forgings and the impact limiters.

Yankee Class Canistered Fuel and GTCC Waste

The canister containing Yankee Class fuel or GTCC waste is placed in the NAC-STC cavity with top and bottom spacers. The placement of the canister between the top and bottom spacers effectively precludes the source regions from streaming through areas above and below the

5.1 Discussion and Results

The radiation protection provided by the NAC-STC is in the form of solid multi-walled shielding materials, which totally surround the fuel. These shielding materials include steel and lead for gamma shielding and a borated polymer (NS-4-FR) for neutron shielding. The multi-walled arrangement of steel and lead in the NAC-STC provides optimal weight for gamma attenuation. The NS-4-FR neutron shielding material has a hydrogen density close to that of water and serves to moderate fast neutrons which are then captured in the boron. Boron capture in the neutron shield minimizes the contribution of secondary capture gammas to surface dose rates.

The NAC-STC uses a multi-walled arrangement for both radial and axial shields. The arrangement of the radial gamma shielding in the cask body is a 1.5-inch thick stainless steel inner shell and a 2.65-inch thick stainless steel outer shell with a 3.70-inch thick lead filled annulus between them. The radial neutron shield is arranged around the outer steel shell with a 5.5-inch thick NS-4-FR layer which is covered by a 0.25-inch (6 mm) thick neutron shield shell. The bottom of the cask contains a steel/NS-4-FR/steel shield arrangement with the two stainless steel components providing 11.65 inches of gamma shielding and 2 inches of NS-4-FR neutron shielding. The top of the cask has shields in the form of two closure lids. The inner lid also has a steel/NS-4-FR/steel arrangement with 6.0 inches of steel below 2 inches of NS-4-FR and 1.0 inch of steel above it. The outer lid is a 5.25-inch thick steel disk.

5.1.1 Design Criteria

The shielding design criteria for the NAC-STC meets the requirements of 10 CFR 71. For normal conditions, the dose rate limits specified in 10 CFR 71.47 for consignments under exclusive use are: 1,000 mrem/hour on the surface of the enclosed package, 200 mrem/hour on the outer surfaces of transport vehicle and 10 mrem/hour at 2 meters from the vertical planes represented by the outer lateral surfaces of the transport vehicle. The cask surface dose rate is less than 200 mrem/hr, except at the gap between the neutron shield and the upper impact limiter and at the rotation trunnions, where the maximum does rate is 366 mrem/hr. The maximum dose rate at the personnel barrier, which is the accessible surface of the package, adjacent to the gap between the neutron shield and upper impact limiter, is significantly less than 200 mrem/hr. Note that the cask tie-down structure that is present at this location is conservatively not considered. The 10 mrem/hour criterion has also been met at all locations 2 meters from the railcar. Under hypothetical accident conditions, 10 CFR 71.51 specifies a dose rate limit of

1,000 mrem/hour at 1 meter from the surface of the cask. This criterion has also been met at all locations.

The accessible surface of the package is defined as a personnel barrier that will be on the same plane as the outer radial surface of the top half of the impact limiters. The personnel barrier will attach to the edge of the railcar between the impact limiters. The personnel barrier location is shown in NAC Drawing 423-901.

5.1.2 Design Basis Fuel

The NAC-STC has two configurations for transport of design basis fuel: directly loaded and canistered. The design basis fuel for the directly loaded configuration is described in Section 5.1.2.1. There are two canister configurations. The Yankee-MPC for Yankee Class fuel and GTCC waste and the CY-MPC for Connecticut Yankee Class fuel and GTCC waste. The design basis fuels for shielding for these configurations are described in Sections 5.1.2.2 and 5.1.2.3, respectively.

5.1.2.1 Design Basis Directly Loaded Fuel

The NAC-STC can transport up to 26 directly loaded, intact PWR fuel assemblies over a range of burnups, initial ^{235}U enrichments, and minimum allowable cool times. The general fuel characteristics for directly loaded fuel are given in Table 5.1-1. Detailed material and geometry descriptions for the fuel types evaluated are provided in Section 5.2. Reference fuel assemblies have been developed and analyzed to envelop PWR fuel for 14×14, 15×15, 16×16, and 17×17 array sizes. These assemblies are constructed by surveying assembly data for assemblies less than 165 inches in length (the length of the STC cavity) and using bounding fuel parameters to maximize fuel mass (MTU) and hardware source terms. Decay heats and dose rates have been calculated for a finite range of burnups, initial ^{235}U enrichments, and cool times to generate an allowable loading table, or minimum cool time table. Adherence to the cool timetable ensures that heat load and dose rate limits will not be exceeded.

Three-dimensional dose rates are calculated using a response function methodology. Each of the four fuel assembly array sizes is analyzed over a range of source regions and source types with unit source in each relevant energy group. Source types considered are fuel neutron, fuel gamma

of the interior loading positions of the GTCC basket. The GTCC canister is loaded in the NAC-STC for transport.

The design basis gamma source for the Yankee GTCC waste is determined from dose rate measurements and chemical assay of the GTCC waste. This gamma source is primarily due to the activation of the core baffle from 30 years of neutron flux exposure and to a lesser extent from surface contamination. This source term is used for all of the loading positions of the GTCC basket and bounds the source term for the miscellaneous hardware items. The design basis source term for the GTCC waste canister is 9.493×10^{15} photon/s, which is equivalent to 125,000 curies of ^{60}Co. The design basis thermal output is 1.93 kW.

5.1.2.3 Design Basis Connecticut Yankee Canistered Fuel and GTCC Waste

The design basis Connecticut Yankee (CY) fuels for the shielding evaluation are stainless steel and Zircaloy clad 15 x 15 assemblies. The stainless steel clad assemblies have a maximum burnup of 38,000 MWD/MTU and a minimum of 10-year cool time. The Zircaloy clad assemblies have a maximum burnup of 43,000 MWD/MTU and a minimum of 10-year cool time. The characteristics of the Connecticut Yankee fuel assemblies are presented in Table 5.1-1 and the stainless steel and Zircaloy fuel physical parameters are presented in Table 5.1-2. The fuel assembly source terms are presented in Table 5.1-3. The source regions of the fuel assemblies are shown in Figure 5.1-5.

The NAC-STC can also safely transport Connecticut Yankee GTCC waste. The GTCC waste, consisting of activated steel, is placed in a fuel assembly sized can. Up to 24 GTCC containers can be loaded into the CY-MPC GTCC basket. The CY-MPC GTCC canister is loaded in the NAC-STC cask for transport.

The design basis gamma source for CY GTCC waste is due to the activation of the core baffle during the lifetime of core operation. The source term for the CY-MPC canister is based on 2.77×10^5 curies of ^{60}Co in 14,300 lbs of core baffle material, four years after reactor shutdown.

The CY-MPC may contain up to four reconfigured fuel assemblies positioned in the oversized corner locations in the basket. The CY-MPC reconfigured fuel assembly is designed to confine individual spent fuel rods or portions thereof, within individual stainless steel tubes. Each CY-MPC reconfigured fuel assembly can accommodate up to 100 rods in a 10 x 10 lattice, which

is significantly less than the number of fuel rods in an intact assembly. Because the source term (neutron and gamma) is directly proportional to fuel mass, for a given burnup and enrichment, the source term produced by the fuel rods within the CY-MPC reconfigured assembly is bounded by that of a design basis fuel assembly. Consequently, a rigorous shielding analysis is not required for the CY-MPC reconfigured fuel assemblies.

The CY-MPC may also contain up to four damaged fuel cans positioned in the oversized corner locations of the basket. The CY-MPC damaged fuel can may hold a complete fuel assembly, a lattice or a failed rod storage canister. As such, the shielding analysis conservatively assumes that no damaged fuel cans are present in the canister, as the additional shielding provided by the wall of the can would serve to reduce external dose rates. The effect of damaged fuel migrating into the void space in the upper and lower assembly hardware regions is evaluated explicitly.

The CY-MPC may also contain up to two assemblies with a maximum of two irradiated stainless steel filler rods per assembly. Assemblies with irradiated stainless steel rods may only be loaded in basket positions 13 and 14 as shown in Figure 6.3-3. A dose rate comparison for both normal and accident conditions yields filler rod dose rates are less than 1% of the total dose rate at any surface of the NAC-STC.

5.1.3 Shielding Materials

The shielding materials are selected and arranged to minimize cask weight while maintaining overall shield effectiveness. Lead and steel are chosen as effective gamma radiation shields, and NS-4-FR is provided to efficiently moderate and absorb the neutron radiation, while minimizing the generation of secondary gamma radiation.

5.1.4 Results

For both the directly loaded and the canistered transport configurations, this section demonstrates that the NAC-STC satisfies the regulatory criteria of 10 CFR 71.47 under normal transport condition, and 10 CFR 71.51(a) for hypothetical accident conditions. Specifically, for an exclusive use shipment in an enclosed transport vehicle, the dose rates remain less than 1,000 mrem/hour on the surface of the package, less than 200 mrem/hour at all locations on the surface of the personnel barrier and less than 10 mrem/hour at all locations 2 meters from the edge of the railcar (any point 2 meters from the vertical planes projected from the outer edges of the conveyance). Also, under hypothetical accident conditions, the dose rate is less than 1,000 mrem/hr at 1 meter from the surface of the package. Therefore, the NAC-STC satisfies the shielding criteria of 10 CFR 71.

5.1.4.1 Results of the Shielding Evaluation for Directly Loaded Fuel

The maximum dose rates calculated for the normal transport conditions are shown in Table 5.1-4, with locations of the maximum dose rates shown in Figure 5.1-2. Cask surface dose rates do not exceed the regulatory limit for a closed transport vehicle of 1,000 mrem/hour at the surface of the package. The dose rates at 2 meters from the railcar comply with the 10 mrem/hour regulatory limit.

The maximum normal conditions surface dose rate at the cask radial midplane is 41 mrem/hour. The highest dose rate, occurring on the surface of the cask at the gap between the radial neutron shield and the upper impact limiter, is 366.4 mrem/hour. All cask surface dose rates are much less than 1,000 mrem/hour. Ducting of neutrons through the copper/stainless steel fins is considered in Section 5.4.1.1. The results of the ducting evaluation show that this phenomenon has a very small effect on the total cask dose rate. Azimuthal variations in the calculated dose rate are considered in the explicit heat fin and neutron shield model. The neutron dose rate increase resulting from the ducting is offset by the reduction of the gamma dose rate resulting from the additional shielding provided by the fins.

Table 5.1-5 provides accident dose rates that could occur in the event of the loss of all gaseous elements in the neutron shield combined with radial and axial lead slumps due to cask side and end drops. Although the neutron shield material exceeds its safe operating temperature limits in the fire accident, a complete loss of neutron shielding is not credible for the NAC-STC. Some of the neutron shielding capability may be lost, however, as a result of the fire accident. Therefore, the accident shielding calculations conservatively assume a complete loss of gaseous elements in the neutron shielding. In the event of a cask end drop, it is possible for the lead gamma shielding to slump and fill the annular gap (if one exists) created by the cooling of the lead after fabrication. For worst case conditions, this accident could create a 2.35-inch gap at the top or bottom of the lead annulus. If the cask is subject to a side drop, the lead gamma shielding could slump and create a void on the upper side of the cask. An evaluation of this accident shows the lead thickness may be reduced by a maximum of 0.928-inch. The dose rates shown in Table 5.1-5 show that neither the loss of the neutron shielding nor the slumping of the lead will result in a dose rate that exceeds the hypothetical accident dose rate limit of 1,000 mrem/hour at 1 meter from the cask surface.

Therefore, the NAC-STC fulfills the design criteria of Chapter 1 in that under normal transport conditions, the maximum dose rates are less than 1,000 mrem/hour on the surface of the package, less than 200 mrem/hour at all locations at the surface of the personnel barrier, and less than 10 mrem/hour at all locations 2 meters from the personnel barrier. The cask also satisfies the hypothetical accident criteria of 1,000 mrem/hour at 1 meter from the cask surface.

5.1.4.2 Shielding Evaluation for Yankee Class Canistered Fuel and GTCC Waste

A 1-D radial and axial shielding analysis was performed for both the canistered Yankee Class fuel and GTCC waste under normal and hypothetical accident conditions. The dose rates for canistered fuel (Combustion Engineering, 36,000 MWD/MTU, 8-year cooled) are provided in Tables 5.1-6 and 5.1-7. These dose rates are provided in Tables 5.1-8 and 5.1-9 for the GTCC waste. Under normal conditions, the canister is positioned in the cavity with top and bottom spacers, and the impact limiters are in place on the cask. Under accident conditions (i.e., 30-foot drop and fire accident), the radial midplane results assume loss of neutron shielding. A complete loss of neutron shielding is not credible for the NAC-STC. However, because of the elevated fire accident temperatures, the neutron shields exceed their safe operating limits and some neutron shielding capability may be lost. Also, in the axial models, it is assumed that the cavity spacers are crushed, the impact limiters are lost, and the canister is positioned at either the top or the bottom of the cavity.

The maximum calculated dose at the surface of the cask centerline when loaded with canistered Yankee Class fuel under normal conditions is 10.25 mrem/hour. This is much less than the 41 mrem/hour for the same location with the directly loaded reference fuel in the cask. In the accident condition involving loss of neutron shielding and lead slump, a maximum dose rate of 262.76 mrem/hour is calculated at 1 meter from the radial midplane of the NAC-STC. Based on the 4.6 dose multiplier assigned to the damaged fuel region in Section 5.3.2.3, the maximum damaged fuel dose rate is 7.91 mrem/hr at 2 meters and 47 mrem/hr on the cask surface. The multiplier conservatively does not account for self-shielding of the increased source mass or the presence of only four damaged fuel cans in the 36-assembly basket. For the accident case, the 1 meter dose rate for damaged fuel is 18.9 mrem/hr. Consequently, the Transport Index of 21 remains controlled by the directly loaded contents condition. This is also less than the directly

Chapter 6

6.0 CRITICALITY EVALUATION

6.1 Discussion and Results

The NAC-STC is designed to safely transport spent fuel in two configurations. Fuel assemblies may be placed directly into a fuel basket installed in the cask cavity (directly loaded) or may be sealed in a transportable storage canister (canistered). In the directly loaded configuration, the NAC-STC can transport 26 PWR fuel assemblies. The design basis fuels for the directly loaded configuration are the Westinghouse, Exxon/ANF/SPC, Combustion Engineering and Framatome-Cogema PWR fuel assemblies described in Table 6.2-1. In the canistered configuration, the NAC-STC can transport up to 36 Yankee Class fuel assemblies or up to 26 Connecticut Yankee fuel assemblies. The canistered configuration containing Yankee Class fuel is referred to as the Yankee-MPC. The canistered configuration containing Connecticut Yankee fuel is referred to as the Connecticut Yankee MPC (CY-MPC). The Yankee Class fuel assemblies are described in Table 6.2-2. The Connecticut Yankee fuel assemblies are described in Table 6.2-4.

The NAC-STC can also transport canistered Greater Than Class C (GTCC) waste. Since the GTCC waste does not contain fissionable isotopes, a criticality evaluation is not required.

This chapter demonstrates that the NAC-STC with the design basis spent fuel meets the criticality requirements of 10 CFR 71 Sections 71.55 and 71.59 [1]. As demonstrated by the criticality analyses presented in Section 6.4 and summarized below, the NAC-STC remains subcritical under all conditions and is assigned a Criticality Safety Index (CSI) of 0 ($N = \infty$) in accordance with 10 CFR 71.59.

6.1.1 Directly Loaded Fuel

The NAC-STC is designed to transport 26 directly loaded PWR fuel assemblies with an initial enrichment up to 4.2 wt % ^{235}U, with the exception of fuel assemblies meeting the geometric constraints of the 17 x 17 Framatome-Cogema AFA design, which is limited to 4.5 wt % ^{235}U. Criticality control in the NAC-STC is achieved using a flux trap principle. Each of the basket tubes in the NAC-STC are surrounded by four BORAL or TalBor neutron absorber sheets which are held in place by steel cladding. The neutron absorber sheets have a minimum 0.02 g $^{10}B/cm^2$ loading. The spacing of the basket tubes is maintained by the steel support disks. These disks provide water gap spacings between tubes of 1.64 inch and 3.46 inch. When the cask is flooded

with water, fast neutrons leaking from the fuel assemblies are thermalized in the water gaps and are absorbed in the neutron absorber sheets before causing a fission in an adjacent fuel assembly.

The SCALE 4.3 CSAS25 (SCALE 4.3, Landers and Petrie, 1995) calculational sequence is used to perform the NAC-STC criticality analysis. This sequence includes KENO-Va (Petrie) Monte Carlo analysis to determine the NAC-STC effective neutron multiplication factor (k_{eff}) under normal and accident conditions. The 27 group neutron library is used in all calculations, including those used to evaluate the sensitivity of the package to a range of moderator density and center-to-center spacing. The principal characteristics of the directly loaded assemblies are shown in Table 6.2-1. The most reactive directly loaded fuel assembly is the Framatome-Cogema 17 x 17 having an enrichment of 4.5 wt % ^{235}U. The analyses yielded the following maximum results:

Normal Conditions:	$k_{eff} \pm \sigma$	k_s
Loading – Moderator inside and dry outside	0.92541 ± 0.00086	0.93948
Transport – Dry inside and moderator outside	0.44315 ± 0.00032	0.44379
Hypothetical Accident Conditions:		
Fully Moderated	0.93388 ± 0.00083	0.94794

A typical CSAS25 input and output for Framatome-Cogema fuel is shown in Figure 6.7-10. Conservatisms contained in these analyses included: (1) 75 percent of the specified minimum ^{10}B loading in the BORAL or TalBor neutron absorber material; (2) infinite array of casks in the X-Y plane; (3) infinite fuel length with no inclusion of end leakage effects (standard basket configuration); (4) no structural material present in the assembly; (5) no dissolved boron in the cask cavity or surrounding loading or storage area; (6) no credit taken for fuel burnup or for the buildup of fission product neutron absorbers; and (7) moderator in the pellet to fuel rod clad gap during accident evaluations.

6.1.2 Canistered Yankee Class Fuel

The NAC-STC may transport a transportable storage canister containing up to 36 design basis Yankee Class fuel assemblies. Criticality control in the canister basket is also achieved using the flux trap principle. The flux trap controls the reactivity in the interior of each of the three basket configurations. In the first of the configurations, all fuel tubes are separated by a flux trap that is formed by surrounding the tube with stainless steel support disks and four 0.01g $^{10}B/cm^2$ (minimum) areal density BORAL sheets, which are held in place by stainless steel covers. This

configuration is referred to as "standard" in following text. In the other configurations, the size of four fuel tubes (one outer tube in each quadrant of the basket) is increased to form either enlarged fuel tubes or screened damaged fuel cans. The BORAL sheets are removed from the outside of the enlarged tubes and damaged fuel cans to retain a similar width as that of a standard fuel tube. The damaged fuel cans contain Yankee Class fuel assemblies with up to 20 damaged or missing fuel rods. The remainder of the tubes have BORAL sheets on each of the four sides. The spacing of the basket tubes is maintained by the stainless steel support disks. These disks provide water gap spacing between tubes of 0.75, 0.81 or 0.875 inches, depending on the tube placement within the basket. When the cask is flooded with water, fast neutrons leaking from the fuel assemblies are thermalized in the water gaps and are absorbed in the BORAL sheets before causing a fission in an adjacent fuel assembly. This NAC-STC canistered basket can accommodate up to 36 Yankee Class Zircaloy-clad assemblies with a maximum initial enrichment of 4.03 wt % ^{235}U or 36 Yankee Class stainless steel-clad assemblies with a maximum initial enrichment of 4.97 wt % ^{235}U.

The Yankee-MPC may contain one or more Reconfigured Fuel Assemblies. The Reconfigured Fuel Assembly is designed to confine the Yankee Class spent fuel rods, or portions thereof, which are classified as failed fuel. The total number of full-length rods in a reconfigured fuel assembly is less than the number contained in a Yankee Class fuel assembly (maximum of 64 versus 256 rods). Consequently, the reactivity of the Reconfigured Fuel Assembly, even with the most reactive fuel rods, is less than the design basis fuel assembly used in criticality (see Section 6.4.3.1).

The SCALE 4.3 CSAS25 calculational sequence is used to perform the Yankee-MPC canistered fuel criticality analysis, based on the use of the most reactive Yankee Class fuel assembly. This sequence includes KENO-Va Monte Carlo analysis to determine the effective neutron multiplication factor (k_{eff}) under normal and accident conditions. The 27 group ENDF/B-IV neutron cross-section library is used in all calculations, including those used to evaluate the sensitivity of the package to a range of moderator density and center-to-center spacing. The most reactive Yankee Class fuel is the United Nuclear Type A. The principal characteristics of this assembly are shown in Table 6.2-2. Normal and accident conditions were evaluated as shown below. The wet loading condition results are shown for information only. In normal loading of canistered fuel into the NAC-STC transport cask, the canister will be dry inside and out. Fuel loading in the canister will take place in the transfer cask.

The analyses yielded the following maximum results for the standard and enlarged fuel tube configurations:

Yankee-MPC, Normal Transport	$k_{eff} \pm \sigma$	k_s
Loading - Moderator inside and dry outside	0.8761 ± 0.0007	0.8942
Transport - Dry Inside and moderator outside	0.4580 ± 0.0006	0.4760
Yankee-MPC, Hypothetical Accident		
Fully Moderated	0.8834 ± 0.0008	0.9014
Fully Moderated – Enlarged fuel tubes	0.9003 ± 0.0007	0.9183

The maximum bias and uncertainty adjusted reactivity for the basket containing the damaged fuel cans is 0.9388 for a hypothetical accident condition. Increased reactivity over the standard configuration is the result of a combining a higher reactivity damaged fuel payload, fuel assemblies with up to 20 fuel rods removed, with the removal of the BORAL absorber sheets from the damaged fuel can, increasing the system interaction.

Fully moderated includes water inside and outside of the cask, including the neutron shield region, and inside and outside of the fuel, including the fuel pellet and cladding gaps. Only the hypothetical accident condition is presented for the enlarged fuel tube case, since it represents the bounding configuration.

Conservatisms contained in these analyses included: (1) most reactive Yankee Class fuel assembly class with maximum U loading; (2) 75 percent of the specified minimum ^{10}B loading in the neutron absorber sheets; (3) infinite array of casks in the X-Y plane; (4) infinite fuel length with no inclusion of end leakage effects; (5) no structural material present in the assembly; (6) no dissolved boron in the cask cavity or surrounding loading or storage area; (7) no credit taken for fuel burnup or for the buildup of fission product neutron absorber sheets; and (8) moderator assumed in the gap between the pellet and fuel rod clad.

6.1.3 Canistered Connecticut Yankee Fuel

The NAC-STC may also transport a CY-MPC canister containing up to 26 Connecticut Yankee fuel assemblies. The criticality evaluation of the NAC-STC containing the CY-MPC is performed with the MONK8a [5] Monte Carlo Program for Nuclear Criticality Safety Analysis. This code employs the Monte Carlo technique in combination with JEF 2.2-based point energy neutron libraries to determine the effective neutron multiplication factor (k_{eff}). MONK8a, with

the JEF 2.2 neutron cross-section libraries, is benchmarked by comparison to critical experiments relevant to Light Water Reactor fuel in storage and transport casks as shown in Section 6.5.2. The NUREG/CR-6361 [6] method-based verification performed for MONK8a has established an upper subcritical limit as a function of system parameters. For the Connecticut Yankee canistered fuel, the upper subcritical limit is 0.9425 (Section 6.5.2).

Criticality control in the CY-MPC basket is achieved using geometric control of the fuel assemblies along with the flux trap principle. Each of the fuel tubes in the basket is surrounded by four BORAL or TalBor neutron absorber sheets with a core areal density of 0.02g $^{10}B/cm^2$ (minimum). The sheets are held in place by stainless steel cladding. The center-to-center spacing of the fuel tubes is maintained by the stainless steel support disks.

Two configurations of the CY-MPC basket are available for loading: the standard 26-assembly basket configuration, and a 24-assembly basket configuration where two of the basket openings are blocked. The 26-assembly basket is analyzed for Zircaloy-clad assemblies with an initial enrichment of up to 3.93 wt % ^{235}U and for stainless steel clad assemblies with an initial enrichment of up to 4.03 wt % ^{235}U. These stainless steel clad fuel assemblies may also be loaded in the 24-assembly basket. Westinghouse Vantage 5 Zircaloy-clad assemblies with an initial enrichment of up to 4.61 wt % ^{235}U must be loaded in the 24-assembly basket. There are 53 Westinghouse Vantage 5H fuel assemblies in the Connecticut Yankee spent fuel inventory.

The remaining inventory may be loaded in either of the basket configurations. Evaluation of the CY-MPC reactivity is performed using the transfer cask shield geometry and considers the normal and accident conditions of transport. The reactivity of the transfer cask loaded with fuel is assumed to accurately represent the reactivity of the NAC-STC loaded with the same fuel. Additional conservative conditions and assumptions considered include the most reactive Connecticut Yankee fuel assembly type, 75% of the specified minimum ^{10}B loading in the neutron absorber, no credit taken for fuel burnup or for the buildup of fission product neutron absorber; worst case mechanical basket configuration, optimum moderation, including moderation in the gap between the pellet and fuel rod clad, and an infinite three-dimensional array of casks. The most reactive Connecticut Yankee fuel loading occurs with the 24-assembly basket fully loaded with Zircaloy-clad fuel assemblies with a maximum enrichment of 4.61 wt % ^{235}U. The 24-assembly basket configuration loaded with the most reactive fuel bounds the most reactive 26-assembly basket loading.

The maximum effective neutron multiplication factor from this loading is 0.3715 under dry conditions and 0.9327 under the postulated transport accident conditions involving full moderator intrusion. Including two standard deviations establishes a system reactivity threshold, $k_{eff} + 2\sigma$, of 0.9343, which is less than the subcritical limit of 0.9425. Consequently, the most reactive configuration of the canistered Connecticut Yankee fuel in the NAC-STC, containing the most reactive fuel assemblies in the most reactive configuration, is well below the regulatory criticality safety limit, including all biases and uncertainties under normal and accident conditions.

6.4 Criticality Calculation

This section demonstrates that the criticality safety of the NAC-STC, in either the directly loaded configuration, or the Yankee-MPC or CY-MPC canistered fuel configuration(s), satisfies the licensing requirements for the shipment of fissile material provided in 10 CFR 71.55 and 10 CFR 71.59.

10 CFR 71.55 and 10 CFR 71.59 require that the package remain subcritical under any credible condition, e.g., optimum interior/exterior moderation and reflection and credible configuration of the material. A criticality safety index is to be assigned to the fissile material package. This index reflects the number of packages (casks in this context) remaining subcritical in an array configuration.

Additional requirements imposed include the reduction in neutron absorber sheet ^{10}B from 100 to 75 percent and water in the pellet-to-cladding gap.

Undamaged Cask

Compliance with the requirements of paragraphs (b) and (d) of 10 CFR 71.55 is shown by modeling an undamaged cask surrounded by water. Requirements of paragraphs (a) through (c) of 10 CFR 71.59 are satisfied by providing a value of "N" equal to infinity and a CSI of 0 by imposing reflecting boundary conditions on the sides of the model simulating an infinite array of undamaged casks. Optimum interior and exterior moderation, including exterior full reflection by more than 20 cm of water, shows compliance with 10 CFR 71.55 paragraphs (b)(2), (b)(3) and (d)(3). Normal operating conditions for the canistered content transport cask include a dry canister cavity. The canister is loaded, dried, and seal welded inside a transfer cask. Only after the canister is dried and sealed is it placed into the transport cask. For conservatism, the interior of the canistered configurations is assumed to be fully flooded within the transport cask. This is identical to the analysis of loading operations for the directly loaded cask configuration. For canister loadings containing damaged fuel cans, preferential and uneven flooding conditions are evaluated. A representative set of exterior moderator density and cask pitch criticality evaluations shows compliance with 10 CFR 71 under dry cavity, transport conditions.

Damaged Cask

Compliance with the requirements of paragraph (e) of 10 CFR 71.55 is shown by modeling a damaged cask surrounded by water. Compliance with 10 CFR 71.59 is demonstrated by imposing reflection boundary conditions on the sides of the model to simulate an infinite array of damaged casks, thereby resulting in a CSI of 0. Optimum interior and exterior moderation, including exterior full reflection by more than 20 cm of water, shows compliance with 10 CFR 71.55 paragraphs (e)(2) and (e)(3) and 10 CFR 71.59 paragraph (a)(2).

A damaged transport cask is defined as having been subjected to the hypothetical accident conditions specified in 10 CFR 71. Under these conditions the cask containment is maintained, and the cavity, therefore, remains dry. However, to show the cask's capability to remain subcritical under optimum internal and external moderation, an internally flooded cask is analyzed. During the accident, the radial neutron shield is assumed to be lost as a result of fire and is replaced by the external moderator. Even though the fuel cladding is shown to remain intact following the cask drop, the pellet-to-clad gap is assumed to be filled with water. Introducing additional moderator into the normally under-moderated fuel assembly lattice increases reactivity.

6.6 References

1. Code of Federal Regulations, "Packaging and Transportation of Radioactive Materials," Part 71, Title 10.

2. Not used.

3. Landers, N.F. and Petrie, L.M., "SCALE 4.3: Modular Code System for Performing Standardized Computer Analyses for Licensing Evaluation for Workstations and Personal Computers," ORNL CC-545, ORNL, September 1995.

4. Petrie, L.M. and Landers, N.F., "KENO-Va: An Improved Monte Carlo Criticality Program with Supergrouping," ORNL/NUREG/CSD-2/V2/R5, Section F11, ORNL, September 1995.

5. AEA Technology, The Answers Software Package, "MONK® - A Monte Carlo Program for Nuclear Criticality Safety and Reactor Physics Analysis," Version 8a, AEA Technology, Nuclear Science Division.

6. NUREG/CR-6361, "Criticality Benchmark Guide for Light-Water-Reactor Fuel In Transportaion and Storage Packages," Nuclear Regulatory Commission, March 1997.

7. Landers, N.F., Bucholz, J.A., and Petrie, L.M., "The Material Information Processor For SCALE," ORNL/NUREG/CSD-2/V2/R5, Section M7.

8. Greene, M., "BONAMI: Resonance Self-Shielding By The Bondarenko Method," ORNL/NUREG/CSD-2/V2/R5, ORNL, September 1995.

9. Greene, M. et al, "NITAWL-II: Scale System Module For Performing Resonance Shielding and Working Library Production," ORNL/NUREG/CSD-2/V2/R5, ORNL, September 1995.

10. ANSI/ANS-8.1, "Nuclear Criticality Safety in Operations with Fissionable Materials Outside Reactors," 1983.

11. B&W-1484-7, "Critical Experiments Supporting Close Proximity Water Storage of Power Reactor Fuel," Baldwin, N.M., Hoovler, G.S., Eng, R.L., and Welfare, F.G., July 1979.

12. Bierman, B.M., Clayton, E.D., "Criticality Experiments with Subcritical Clusters of 2.35 wt% and 4.31 wt % ^{235}U Enriched UO_2 Rods in Water at a Water with Steel Reflecting Ratio of 1.6," NUREG/CR-1547, July 1980.

13. Bierman, B.M., Clayton, E.D., "Criticality Experiments with Subcritical Clusters of 2.35 wt% and 4.31 wt % ^{235}U Enriched UO_2 Rods in Water with Uranium or Lead Reflecting Walls," NUREG/CR-0796, April 1979.

14. Bierman, B.M., Clayton, E.D., "Criticality Experiments with Subcritical Clusters of 2.35 wt% and 4.31 wt % ^{235}U Enriched UO_2 Rods in Water with Steel Reflecting Walls," Nuclear Technology, Volume 54, pp 131-144, August 1981.

15. Bierman, B.M., "Criticality Experiments to Provide Benchmark Data on Neutron Flux Traps," PNL-6205/UC-714, June 1988.

16. Manaranche, J.C., et al, "Critical Experiments with Lattices of 4.74 wt% U^{235} Enriched UO_2 Rods in Water," NS&E 71, pp 154-163, 1979.

17. Manaranche, J.C., et al, "Dissolution and Storage Experiment with 4.74 wt% U^{235} Enriched UO_2 Rods," Nuclear Technology, Volume 50, September 1980.

18. Owen, D. B,. "Factors for One-Sided Tolerance Limits and for Variables Sampling Plans," SCR-607, 1963.

19. ANSI/ANS-8.17, "American National Standard for Criticality Safety Criteria for the Handling, Storage, and Transportation of LWR Fuel Outside Reactors," American Nuclear Society, 1984.

Chapter 7

Table of Contents

7.0 OPERATING PROCEDURES 7-1

7.1 Outline of Procedures for Receipt and Loading the Cask 7.1-1
- 7.1.1 Receiving Inspection 7.1-1
- 7.1.2 Preparation of Cask for Loading 7.1-1
- 7.1.3 Loading the NAC-STC Cask 7.1-5

7.2 Preparation for Transport 7.2-1
- 7.2.1 Preparation for Transport (Immediately After Loading) 7.2-1
- 7.2.2 Preparation for Transport (After Long-Term Storage) 7.2-2

7.3 Outline of Procedures for Unloading the Cask 7.3-1
- 7.3.1 Receiving Inspection 7.3-1
- 7.3.2 Preparation of the NAC-STC Cask for Unloading 7.3-1
- 7.3.3 Unloading the NAC-STC Cask 7.3-5
- 7.3.4 Preparation of Empty Cask for Transport 7.3-8

7.4 Leak Test Requirements 7.4-1
- 7.4.1 Containment Verification Leak Test Procedures 7.4-1
- 7.4.2 Leak Testing for Transport After Long-Term Storage 7.4-2
- 7.4.3 Leak Testing for Transport After Loading without Interim Storage 7.4-3
- 7.4.4 Corrective Action 7.4-4

7.5 Railcar Design and Certification Requirements 7.5-1
- 7.5.1 Railcar and Tie-Down Design Requirements 7.5-1
- 7.5.2 Railcar Tie-Down Design Loadings 7.5-1
- 7.5.3 Railcar and Tie-Down Certification 7.5-1

7.6 Procedures for Loading and Unloading the Transportable Storage Canister 7.6-1
- 7.6.1 Loading and Closing the Transportable Storage Canister 7.6-1
- 7.6.2 Opening and Unloading the Transportable Storage Canister 7.6-3

List of Figures

Table 7.3-1 Cask Cooldown Piping and Controls Schematic 7.3-9

List of Tables

Table 7-1 Torque Table 7-3

7.0 OPERATING PROCEDURES

This chapter provides an outline of the operating procedures and tests that are performed to ensure proper function of the NAC-STC during transport operations. The operating procedures provided in this chapter are the minimum generic requirements for loading, unloading, preparation for transport, and for inspection and testing of the cask. Bolt torque values are provided in Table 7-1. Each licensee and cask user will develop, prepare and approve site specific procedures, based on the approved detailed operating procedures provided by NAC, to assure that cask handling and shipping activities are performed in accordance with the package Certificate of Compliance and the applicable Nuclear Regulatory Commission and Department of Transportation regulations governing the packaging and transport of radioactive materials.

These procedures assume that the unloaded NAC-STC arrives at a site already configured for use at the site. If this is not the case, then additional operations would be specified in the site specific procedures to configure the cask for the intended use.

The operating procedures in this chapter have been written assuming direct loading or unloading of fuel in the basket in the NAC-STC in a spent fuel pool, or dry loading and unloading of a sealed canister in the reactor cask receiving area, fuel building or other suitable location identified by the user. With minor modifications, site-specific procedures can be written to accommodate the dry direct loading or unloading of fuel from the cask in a hot cell.

Procedures are also provided for the preparation for shipment of an NAC-STC cask that has been loaded and stored at an Independent Spent Fuel Storage Installation (ISFSI) in accordance with the ISFSI license and the 10 CFR 72 requirements.

It is the responsibility of the cask user to prepare site-specific handling procedures in accordance with the Certificate of Compliance, these generic procedures, and the licensee's Quality Assurance program. User approved operating procedures ensure that critical steps are not overlooked, that the packaging is handled in accordance with its Certificate of Compliance and Safety Analysis Report.

The user will verify by fuel accounting, historical data, and inspection records, that the fuel assemblies to be loaded are in compliance with the content conditions of the Certificate of Compliance. In the directly loaded configuration, fuel assemblies or fuel rods with known or suspected cladding defects that exceed pin holes and hairline cracks are not to be loaded into the

NAC-STC. In the canistered configuration, damaged (failed) fuel will be separately containerized (canned) and sealed in the canister prior to transport.

The user shall verify that the NAC-STC transport cask has the correct O-ring configuration for the intended use. The transport cask may be configured with either metallic O-rings or with non-metallic Viton O-rings. The O-rings may not be used interchangeably, since each O-ring type requires a different lid O-ring groove configuration. Consequently, the inner lid, vent and drain port coverplates and outer lid are machined with a square O-ring groove to accept metallic O-rings or are machined with a truncated triangular (dove-tail) groove to accept Viton O-rings.

Viton O-rings may be used only when directly loading spent fuel for transport without interim storage. Metallic O-rings must be used when directly loading spent fuel for an extended period of storage and may be used when directly loading spent fuel for transport without interim storage. Metallic O-rings must also be used when loading canistered fuel or GTCC waste for transport. The metallic and nonmetallic O-rings have different limits of allowable leak rate as specified in the procedures.

7.1 Outline of Procedures for Receipt and Loading the Cask

The following receipt and loading procedures are based on an acceptable cask receipt inspection for first time loading with spent fuel. For casks previously loaded and transported, the receiving inspections will require performance of radiation and removable contamination surveys of the empty cask and vehicle in accordance with 10 CFR 71 and 49 CFR 173 in the U.S. Similar requirements are contained in IAEA TS-R-1.

7.1.1 Receiving Inspection

1. Perform radiation and removable contamination surveys in accordance with 49 CFR 173.441 and 173.443 requirements.
2. Move the transport vehicle with the cask to the cask receiving area.
3. Secure the transport vehicle. Remove the personnel barrier hold down bolts from both sides of the personnel barrier. Using the lifting sling, lift the personnel barrier off of the cask and store it in a designated area.
4. Visually inspect the NAC-STC while secured to the transport vehicle in the horizontal orientation for any signs of damage.
5. Attach slings to the top impact limiter lifting points, remove impact limiter lock wires, impact limiter jam nuts, impact limiter nuts and retaining rods. Remove impact limiter and store upright. Repeat operation for the bottom impact limiter.
6. Release the tiedown assembly from the front support by removing the front tiedown bolts and lock washers.
7. Attach a sling to the tiedown assembly lifting eyes and remove the tiedown assembly from the transport vehicle.
8. Attach the cask lifting yoke to a crane hook with the appropriate load rating. Engage the two yoke arms with the lifting trunnions at the top (front) end of the cask. Rotate/lift the cask to the vertical orientation and raise the cask off of the blocks of the rear support structure of the transport vehicle. Place the cask in the vertical orientation in a decontamination area or other suitable location identified by the user. Disengage the cask lifting yoke from the lifting trunnions.

7.1.2 Preparation of Cask for Loading

The loading procedures are based on the assumption that the cask is being prepared for first time fuel loading following fabrication, or that the scheduled annual maintenance required by the

Certificate of Compliance has been successfully completed within the previous 12 months. If the cask has been used previously, at the start of this procedure, the cask is assumed to be externally decontaminated, empty of fuel contents, and sitting in the decontamination area, or in another location convenient for preparing the cask.

There are two (2) loading options for the NAC-STC. Each requires different preparation steps. The first is direct loading of fuel assemblies into a fuel basket installed in the cask, which is typically performed under water in the spent fuel pool cask loading area. The second is dry loading of a welded transportable storage canister that is already loaded with spent fuel assemblies, Reconfigured Fuel Assemblies, damaged fuel in damaged fuel cans, or with Greater Than Class C (GTCC) waste. Dry loading of the canister into the cask is performed in the cask receiving area, or another convenient location established by the user, using a transfer cask system. This section presents the generic procedures used to prepare the cask for loading for both wet direct fuel loading or dry canister loading.

7.1.2.1 Preparation for Direct Fuel Loading (Uncanistered)

This procedure presents the steps necessary to prepare the cask for under water direct loading of fuel into a basket contained in the NAC-STC cask. This procedure may be modified to accommodate the dry direct loading of fuel in a hot cell.

1. Install appropriate work platforms/scaffolding to allow access to the top of the cask.
2. Detorque in reverse torquing sequence and remove the outer lid bolts. Install the two outer lid alignment pins.
3. Install lifting eyes in the outer lid lifting holes and attach the outer lid lifting sling to the outer lid and overhead crane. Remove the outer lid and place it aside in a temporary storage area. When setting the outer lid down, protect the o-ring and the o-ring groove of the lid from damage. Remove the outer lid alignment pins. Decontaminate the surface of the inner lid and top forging as required. At a convenient time, if a metallic o-ring is used, remove and replace the metallic o-ring in the outer lid. If a Viton o-ring is used, inspect the o-ring and replace as necessary.
4. Detorque drain and vent coverplate bolts and remove the drain port and the vent port coverplates from the inner lid. Store in temporary storage area.

12. Visually examine the internal cavity to ensure that the cavity is free of damage and foreign materials.
13. Install the appropriate bottom spacer for the canister to be loaded. Attach the spacer lift fixture to the spacer. Using a suitable crane, lower the spacer into the cask cavity, and remove the lift fixture.
14. Install the adapter ring and torque the three bolts to 100 ± 20 ft.-lb.
15. Install the transfer cask adapter plate on top of the NAC-STC cask.

7.1.3 Loading the NAC-STC Cask

There are three loading options for the NAC-STC cask, with each requiring different steps. The first is direct loading of fuel assemblies for transport without interim storage and the second option is for transport after a period of interim storage. These loading configurations are assumed to be performed under water in the spent fuel pool cask loading area. The third option is dry loading into the cask of a sealed transportable storage canister that already contains spent fuel or GTCC waste. Dry loading of the canister into the cask is performed in the cask receiving area, or other convenient location established by the user, using a transfer cask. This section presents the generic loading procedures for these options. In both cases, the fuel assemblies to be directly loaded, or those contained within the sealed canister, must conform to the NAC-STC Certificate of Compliance.

7.1.3.1 Direct Loading of Fuel (Uncanistered)

The NAC-STC may be closed with either metallic or nonmetallic O-rings in the containment boundary and outer lid. Metallic O-rings are required: 1) when directly loading spent fuel for an extended period of storage; and 2) when loading canistered fuel or GTCC waste (for transport). Metallic O-rings or Viton O-rings may be used when directly loading spent fuel for transport without interim storage. However, the metallic and non-metallic O-rings may not be used interchangeably, as the O-ring grooves in the lids and port covers are different for each O-ring type. As specified in the appropriate steps of this procedure, the two types of O-rings have different allowable leak rates so the lid and O-ring configurations to be used must be confirmed and the associated leak test requirements identified.

1. Using approved fuel identification and handling procedures and fuel handling equipment, engage the fuel handling tool to the top of the fuel assembly, lift it from the storage rack location, transfer it to above the cask, and carefully lower it into the

designated location in the fuel basket. Be careful not to contact any of the sealing surfaces on the top forging, or to come in contact with the inner lid guide pins during fuel assembly movement.

Note: Each fuel assembly shall contain the standard number of fuel rods for an assembly of that type. Dummy rods of equivalent water displacement must be substituted for removed fuel rods.

2. Record in the cask loading report the fuel identification number and basket position where the fuel assembly was placed.
3. Repeat steps 1 and 2 until the basket is fully loaded or until all desired fuel assemblies have been loaded. If the cask is going to be partially loaded, the fuel assemblies should be loaded, if possible, in a fully symmetric pattern to ensure that the center of gravity of the cask remains aligned as close as possible to the longitudinal axis of the cask.
4. Attach the inner lid lifting sling to an auxiliary crane hook and lift the inner lid. For the Viton O-ring assembly, inspect the O-ring and replace if damaged. For the metallic O-ring assembly, remove the inner lid O-rings, clean the groove surfaces, and install new metallic O-rings. Inspect new O-rings for damage prior to installation. Secure the metallic O-rings in the groove by the use of the O-ring clips and screws. Similarly, replace the metallic O-rings in the vent and drain port coverplates, or inspect the Viton O-rings and replace if required.
5. After replacing the inner lid o-rings, lift the inner lid and place it on the cask using the inner lid alignment pins to assist in proper lid seating and orientation. Visually verify proper lid position.
6. Disconnect the lid lifting device from the auxiliary crane hook and remove crane hook from area.
7. Attach the lifting yoke to the crane hook, lower the lifting yoke into the lifting position over the cask lifting trunnions, and engage the lifting arms to the lifting trunnions. Slowly lift the cask out of the pool until the top of the cask is slightly above the pool water level.

   Note: As an alternative method, the cask and inner lid may be handled simultaneously. In the event that this method is chosen, instead of performing steps 5, 6 and 7, attach the lifting yoke to a crane hook and the inner lid lifting eyes to the lift yoke. Lower the lid and engage to the cask using the lid alignment pins. Engage lifting arms to lifting trunnions. Slowly lift the cask out of the pool until the top of the cask is slightly above the pool water level.
8. Attach a drain line to the quick-disconnect in the interlid port (located in the top forging) and allow the water to drain from the interlid region. Once drained, disconnect the drain line.

9. Install at least 10 inner lid bolts equally spaced on the bolt circle to hand tight.
10. Continue raising the cask from the pool while spraying the external cask surfaces with clean water to minimize surface contamination levels.
11. Move the cask to the cask decontamination area, lower the cask to the floor and disengage the lift yoke (or lift beam and inner lid lifting slings if the alternate method of handling the inner lid was used). Remove the lift yoke and crane from the area.
12. Connect a vent line to the vent port quick-disconnect. Direct the free end of the vent line to a radioactive waste handling system capable of handling liquids and gas.
13. Remove the inner lid alignment pins and install the remaining inner lid bolts and torque all of the bolts to the torque value specified in Table 7-1. The bolt torquing sequence is shown on the inner lid.
14. Connect a drain line to the drain port quick-disconnect (located in the inner lid). Remove the vent line from the vent port quick-disconnect.
15. Drain the cask cavity by connecting an air, nitrogen or helium supply to the vent port quick-disconnect (located in the inner lid). Purge the water from the cask by pressurizing to 35 to 40 psig and hold until all water is removed (observed when no water is coming from the drain line). Turn the air, nitrogen, or helium supply off and disconnect the air, nitrogen or helium supply line from the vent port. Then, disconnect the drain line from the drain port quick-disconnect.
16. Connect a vacuum pump to the cask cavity via the vent and drain port quick-disconnects in the inner lid. Evacuate the cask cavity until a pressure of 4 mbar is reached. Continue pumping for a minimum of 1 hour after reaching 4 mbar. Valve off vacuum pump from system and using a calibrated vacuum gauge (minimum gauge readability of 2.5 mbar), observe for a pressure rise. If a pressure rise (ΔP) of more than 12 mbar in ten minutes is observed, continue pumping until the pressure does not rise more than 12 mbar in ten minutes. Repeat dryness test until cavity dryness has been verified ($\Delta P < 12$ mbar in 10 minutes). Record test results in the cask loading report.
17. Without allowing air to re-enter the cask cavity, turn off and isolate the vacuum pump. Connect a supply of helium (99.9% minimum purity) to the vent port quick-disconnect and backfill the cask cavity to 0 psig helium pressure.
18. Install the drain and vent port coverplates using new metallic O-rings or inspected Viton O-rings. Torque the bolts to the value indicated in Table 7-1.
19. Perform inner lid O-ring leakage testing as follows:

19a. For the metallic O-ring assembly, connect the leak detector vacuum pump to the inner lid interseal test port and evacuate the air between the O-rings to <1 mbar. Hold the vacuum on the interseal for the metallic O-ring assembly region. Using the helium leak detector, verify that any detectable leak rate for metallic O-rings is $\leq 2 \times 10^{-7}$ cm^3/sec (helium). The test sensitivity shall be $\leq 1 \times 10^{-7}$ cm^3/sec (helium).

19b. For Viton O-rings, perform the preshipment leakage rate test to confirm no detected leakage to a test sensitivity of 1×10^{-3} ref cm^3/sec by pressurizing the O-ring annulus to 15 (+2, -0) psig and isolating for a minimum of 15 minutes. There shall be no loss in pressure during the test period.

19c. For new replacement Viton O-rings, use a leak detector connected to the interseal test port to verify the total leakage rate is $\leq 9.3 \times 10^{-5}$ cm^3/sec (helium) (1) with a minimum test sensitivity of 4.7×10^{-5} cm^3/sec (helium).

20. Install the test port plug for the inner lid interseal test port using a new metallic O-ring and torque the plug to the value specified in Table 7-1.

21a. For the metallic O-ring, connect a vacuum pump to the vent port coverplate interseal test port and evacuate the air between the O-rings to <1 mbar. Hold the vacuum on the interseal for the metallic O-ring assembly region. Using the helium leak detector, verify that any detectable leak rate for metallic O-rings is $\leq 2 \times 10^{-7}$ cm^3/sec (helium). The test sensitivity shall be $\leq 1 \times 10^{-7}$ cm^3/sec (helium).

21b. For Viton O-rings(1), perform the preshipment leakage rate test to confirm no detected leakage to a test sensitivity of 1×10^{-3} ref cm^3/sec by pressurizing the O-ring annulus to 15 (+2, -0) psig and isolating for a minimum of 15 minutes. There shall be no loss in pressure during the test period.

21c. For new replacement Viton O-rings, use a leak detector connected to the interseal test port to verify the leakage rate is $\leq 9.3 \times 10^{-5}$ cm^3/sec (helium) (1) with a minimum test sensitivity of 4.7×10^{-5} cm^3/sec (helium).

22. Install the test port plug for the vent port coverplate using a new metallic O-ring and torque the plugs to the value specified in Table 7-1.

23. Repeat Steps 21 and 22 for the drain port coverplate.(1)

24. Drain residual water from the pressure port, ensuring that the pressure port is clear to also allow water to drain from the interlid region.

---

(1) For new Viton O-rings, the combined leakage rates are for the inner O-ring of the lid, inner O-ring of the vent port cover plate and inner O-ring of the drain port cover plate, which are part of the containment boundary. The combined measured leakage rate from all three Viton O-rings must be less than or equal to $\leq 9.3 \times 10^{-5}$ cm^3/sec (helium) in accordance with 10 CFR 71.51.

25. Install the transport pressure port cover on the pressure port. Torque the port cover bolts to the value specified in Table 7-1.
26. Perform a functional leak test on the pressure port cover by removing the O-ring test plug and using a test fixture, pressurize the annulus between the pressure port cover O-rings to 15 psig and isolate. During a 10-minute test period, there shall be no loss in pressure during the test period.
27. Install the pressure port cover interseal test port plug and O-ring and torque the plug to the value specified in Table 7-1.
28. For the metallic outer lid O-ring assembly, remove the O-ring, clean the O-ring seating surface and groove, and install a new metallic O-ring. For Viton O-ring assemblies, inspect the O-ring and replace if damaged.
29. Install outer lid and align vent pins.
30. Attach the outer lid lifting device to the outer lid and overhead crane. Install the outer lid using the alignment pins to assist in proper seating. Remove the outer lid alignment pins. Install the outer lid bolts and torque to the value specified in Table 7-1. The bolt torquing sequence is shown on the outer lid.
31. Attach a supply of air or helium to the interlid port quick-disconnect. Backfill the interlid volume to 15 psig air or helium and hold for 10 minutes. There shall be no pressure loss during the test period. Disconnect air or helium supply.
32. Install the interlid port cover using new metallic O-rings. Torque the interlid port cover bolts to the value specified in Table 7-1.
33. Remove the test plug from the interlid port cover and, using the O-ring test fixture, pressurize the O-ring annulus to 15 psig with air or helium. Isolate the annulus and hold for 10 minutes. No loss of pressure is permitted during the test period.
34. Remove the air or helium supply and vent the annulus pressure. Replace the metallic O-ring on the interlid port cover test plug, install the test plug and torque it to the value specified in Table 7-1.
35. Perform final external decontamination and perform survey to verify acceptable level of removable contamination to ensure compliance with 49 CFR 173.443. Perform final radiation survey. Record the survey results.
36. Perform final visual inspection to verify assembly of the NAC-STC in accordance with the Certificate of Compliance. Verify that the loading documentation has been appropriately completed and signed off.

7.1.3.2 Loading Canistered Fuel or GTCC Waste

Canistered fuel or canistered GTCC waste is loaded into the NAC-STC using a transfer cask. This procedure assumes that the canister has been previously loaded, drained, vacuum dried, backfilled with helium and welded closed. The canister may have been retrieved from dry storage, or it may have been loaded and sealed immediately prior to loading in the NAC-STC. This procedure assumes the sealed canister conforms to the design basis of the NAC-STC and that the canister is already in the transfer cask.

1. Attach the transfer cask yoke to the cask handling crane hook.
2. Engage the transfer cask yoke to the trunnions of the transfer cask.
3. Raise the transfer cask over the NAC-STC cask and lower it until it rests on the transfer cask adapter plate. Remove and store the transfer cask lifting yoke. Remove the transfer cask shield door stops.
4. Attach the two (2) canister 3-legged lifting sling sets to the hoist rings in the canister lid. Attach the opposite end of the slings to the crane hook.
   Note: Alternative canister lifting systems may be utilized.
5. Attach the hydraulic system to the operating cylinders on the transfer cask adapter plate.
6. Raise the canister just enough to take the canister weight off of the transfer cask bottom doors.
7. Open the transfer cask shield doors.
8. Lower the canister into the NAC-STC cask. Exercise caution to avoid contact with the interior cavity wall.
9. Disconnect and remove the canister lifting sling from the crane hook and lower it onto the top of the canister.
10. Close the transfer cask bottom doors and install the door stops.
11. Retrieve the transfer cask lifting yoke and engage the transfer cask trunnions. Lift the transfer cask from the transfer cask adapter plate. Store the transfer cask and transfer cask lifting yoke in the designated locations.
12. Install the NAC-MPC canister top spacer (Yankee-MPC canister only).
13. Retrieve the cask adapter plate lifting sling and attach it to the transfer cask adapter plate.
14. Remove the transfer cask adapter plate and store it in the designated location. Using the appropriate lifting sling, remove the adapter ring and bolts. Install the inner lid alignment pins.

15. Remove the inner lid O-rings and clean inner lid O-ring groove surfaces. Replace the metallic O-rings on the inner lid, carefully inspecting the new O-rings for damage prior to installation. Secure the O-rings in the groove using the O-ring clips and screws.
16. Attach the inner lid lifting slings to an auxiliary crane hook, lift the inner lid and place it on the cask using the inner lid alignment pins to assist in proper lid seating and orientation. Visually verify proper lid position.
17. Disconnect the lid lifting device from the crane hook and remove it from the inner lid.
18. Install at least 10 inner lid bolts equally spaced on the bolt circle to hand tight. Remove the inner lid alignment pins.
19. Install the remaining inner lid bolts and torque all of the bolts to the torque value specified in Table 7-1. The bolt torquing sequence is shown on the inner lid.
20. Remove the metallic O-rings in the drain port coverplate, and clean and inspect the O-ring groove. Install new metallic O-rings and install the coverplate. Torque the coverplate bolts to the value specified in Table 7-1.
21. Connect the vacuum pump to the cask vent port and evacuate the cask cavity to a stable vacuum pressure of 4 mbar (approximately 3 mm of Hg). Without allowing air to re-enter the cask, backfill the cavity with helium (99.9% minimum purity) to 0 psig. Disconnect the helium supply.
22. Remove the metallic O-rings in the vent port coverplate and clean and inspect the O-ring groove. Install new metallic O-rings in the vent port coverplate and install the coverplate. Torque the coverplate bolts to the value specified in Table 7-1.
23. Connect the leak detector to the inner lid interseal test port and evacuate the air between the metallic O-rings until a pressure of <1 mbar is reached. Using the helium leak detector, verify that any detectable leak rate is $\leq 2 \times 10^{-7}$ cm^3/sec (helium). The test sensitivity shall be $\leq 1 \times 10^{-7}$ cm^3/sec (helium).
24. Install the test port plug for the inner lid interseal test port using a new metallic O-ring and torque the plug to the value specified in Table 7-1.
25. Connect the leak detector to the vent port coverplate interseal test port. Evacuate the interseal volume until a pressure of <1 mbar is reached. Using the helium leak detector, verify that any detectable leak rate is $\leq 2 \times 10^{-7}$ cm^3/sec (helium). The test sensitivity shall be $\leq 1 \times 10^{-7}$ cm^3/sec (helium).
26. Install the test port plug for the vent port coverplate using a new metallic O-ring and torque the plug to the value specified in Table 7-1.
27. Repeat Steps 25 and 26 for the drain port coverplate test port.

28. Remove the outer lid metallic O-ring. Clean the outer lid O-ring seating surface and groove. Install a new metallic outer lid O-ring. Install the outer lid alignment pins.
29. Attach the outer lid lifting device to the outer lid and overhead crane. Install the outer lid using the alignment pins to assist in proper seating. Remove the outer lid alignment pins. Install the outer lid bolts and torque to the value specified in Table 7-1. The bolt torquing sequence is shown on the outer lid.
30. Attach a supply of air or helium to the interlid port quick-disconnect. Backfill the interlid volume to 15 psig air or helium and hold for 10 minutes. No loss of pressure is permitted during the 10-minute test period. Disconnect air or helium supply.
31. Install the transport interlid port cover in the interlid port using new O-rings. Torque the interlid port cover bolts to the value specified in Table 7-1.
32. Remove the O-ring test plug from the interlid port cover and, using the O-ring test fixture, pressurize the O-ring annulus to 15 psig with air or helium. Isolate the annulus and hold for 10 minutes. No loss of pressure is permitted during the test period.
33. Vent the annulus pressure, remove the air or helium supply, replace the metallic O-ring on the interlid port cover test plug and install the test plug. Torque the plug to the value specified in Table 7-1.
34. Perform final external decontamination and perform survey to verify acceptable level of removable contamination to ensure compliance with 49 CFR 173.443. Perform final radiation survey. Record the survey results in the cask loading report.
35. Perform final visual inspection to verify assembly of the NAC-STC in accordance with the Certificate of Compliance. Verify that the loading procedure and checklist are appropriately completed and signed off.

7.2 Preparation for Transport

Perform the procedures of either Section 7.2.1 or 7.2.2, whichever is appropriate. Section 7.2.1 addresses preparation for transport without interim storage after loading the cask either with directly loaded fuel or with a previously loaded canister. Section 7.2.2 addresses transport following long-term storage of directly loaded fuel. Transport following long-term storage requires the verification of containment by leak testing the containment boundary formed by the outer O-rings of the inner lid and port covers and the O-ring test ports.

7.2.1 Preparation for Transport (Immediately After Loading)

1. Engage the lift beam to the cask lifting trunnions and move the cask to the cask loading area.
2. Load the cask onto the transport vehicle by gently lowering the rotation trunnion recesses into the rear support. Rotate the cask to horizontal by moving the overhead crane in the direction of the front support. Maintain the crane cables vertical over the lifting trunnions.
3. Using a lifting sling, place the tiedown assembly over the cask upper forging between the top neutron shield plate and front trunnions. Install the front tiedown bolts and lock washers to each side of the front support.
4. Complete a Health Physics removable contamination survey of the cask to ensure compliance with 49 CFR 173.443. Complete a Health Physics radiation survey of the entire package to ensure compliance with 49 CFR 173.441.
5. Using the designated lifting slings and a crane of appropriate capacity, install the top impact limiter. Install the impact limiter retaining rods into each hole and torque to the value specified in Table 7-1. Install the impact limiter attachment nuts and torque to the value specified in Table 7-1. Install the impact limiter jam nuts and torque to the value specified in Table 7-1. Install the impact limiter lock wires. Repeat the operation for the bottom impact limiter installation.

   Note: Balsa impact limiters shall be used for transport of the Connecticut Yankee fuel or GTCC waste canisters. The balsa impact limiters may also be used for transport of directly loaded fuel and for canisters containing Yankee fuel or GTCC waste. Redwood impact limiters may be used for transport of directly loaded fuel and for canisters containing MPC-Yankee fuel or GTCC waste.

6. Install security seals through holes provided in the upper impact limiter and one of the lifting trunnions; and through holes provided in all three bolts in the interlid port cover and the pressure port cover. Record the security seal identification numbers in the cask loading report.
7. Install the personnel barrier/enclosure and torque all attachment bolts to the prescribed torque value. Install padlocks on all personnel barrier/enclosure accesses.
8. Complete a Health Physics radiation survey of the entire package to ensure compliance with 49 CFR 173.441.
9. Complete a Health Physics removable contamination survey of the transport vehicle to ensure compliance with 49 CFR 173.443.
10. Determine the transport index (TI) corresponding to the maximum dose rate at 1 meter from the cask. Record on the shipping documents.
11. Determine the appropriate Criticality Safety Index (CSI) assigned to the package contents in accordance with the CoC, and indicate the correct CSI on the fissile material labels applied to the package.
12. Apply placards to the transport vehicle in accordance with 49 CFR 172.500 and provide special instructions to the carrier/shipper for an Exclusive Use Shipment.
13. Complete the shipping documentation in accordance with 49 CFR Subchapter C.

7.2.2 Preparation for Transport (After Long-Term Storage)

This procedure applies to the transport of directly loaded fuel that has been in storage in the NAC-STC. Canistered fuel or canistered GTCC waste may not be loaded in the NAC-STC for storage. Canistered fuel or GTCC waste is loaded into the NAC-STC only for transport without interim storage.

Prior to placing a directly loaded cask in long-term storage, the cask cavity is backfilled with 1.0 atmosphere (absolute) of helium (99.9% minimum purity) as the normal coolant for the spent fuel and to provide an inert atmosphere to prevent possible oxidation of the fuel. The inner lid interseal volume between the two inner lid metallic gaskets and the interseal volume between the o-rings in the vent and drain port covers are backfilled with 15 psig of helium (99.9% minimum purity). The interlid volume is pressurized to 100 psig and that pressure is monitored for pressure loss by a pressure transducer installed in the cask upper forging, and closed by a specially equipped port cover filled with a pressure feed-through tube (License Drawing No. 423-807). This overpressure system ensures that in the off-normal event of any leakage of the inner lid or port cover o-rings, the leakage path will be clean helium into the cavity. If, during the

storage period, no significant pressure loss is observed in the pressure monitoring volume or system (normally recorded at a minimum of once every 24 hours during storage), it can be concluded that at the end of the storage period, the cask cavity remains backfilled with helium gas.

Prior to preparing the cask for transport, the pressure transducer wiring has been disconnected.

1. Move cask from extended storage location to a designated work area.
2. Evacuate a sample bottle using a vacuum pump and remove the interlid pressure port cover. Isolate the sample bottle and connect it to the interlid port quick-disconnect and fill it with interlid region atmosphere.

   Note: The interlid pressure may be as high as 100 psig. Use caution in collecting the gas sample.
3. Isolate the sample bottle and disconnect it from the interlid port quick-disconnect.
4. Bring the sample bottle to the appropriate facility and analyze the contents of the sample bottle.
5. If krypton-85 is present in the sample bottle, additional radiological precautions may be imposed by Health Physics personnel prior to proceeding with the removal of the outer lid. A determination shall also be made as to whether replacement of the inner lid seals is required. If the gas sample is acceptable, proceed with normal operations.
6. Attach valved venting hose to interlid port quick-disconnect and open valve to vent interlid region.
7. Remove the outer lid bolts and install the outer lid alignment pins and outer lid lifting eye bolts.
8. Attach the outer lid lifting device to the outer lid lifting eye bolts and overhead crane. Remove the outer lid and place it aside in a temporary storage area. Protect the O-ring and O-ring groove of the lid from damage. Remove the outer lid alignment pins.
9. Verify the torque of the inner lid bolts and vent and drain port coverplate bolts by torquing the bolts in accordance with the bolt torque sequence to the values specified in Table 7-1.
10. Remove the drain port coverplate port plug. Connect the leak detector vacuum pump to the drain port coverplate test port and evacuate the helium between the metallic O-rings to a pressure of <1 mbar. Without allowing air to re-enter the interseal region, backfill the drain port coverplate interseal region with helium (99.9% minimum purity) to a pressure of 0 psig.
11. Install the drain port coverplate test plug using a new O-ring and torque to the value specified in Table 7-1.

12. Repeat steps 10 and 11 for the vent port coverplate test plug.
13. Remove the inner lid interseal test port plug and connect a vacuum pump to the inner lid interseal test port quick-disconnect. Evacuate the inner lid interseal volume until a pressure of <1 mbar.
14. Without allowing air to re-enter the interseal volume, backfill the interseal volume with helium (99.9% minimum purity) to 0 psig. Disconnect helium supply.
15. Install the inner lid interseal test port plug with a new metallic O-ring and torque the plug to the value specified in Table 7-1.
16. Clean the outer lid O-ring seating surface and groove surface. Install a new metallic O-ring in the outer lid. Reinstall the outer lid alignment pins.
17. Attach the outer lid lifting device to the outer lid lifting eye bolts and the overhead crane. Install the outer lid and visually verify proper seating. Remove the alignment pins and lifting eye bolts, and install the outer lid bolts and torque to the value specified in Table 7-1. The bolt torquing sequence is shown on the outer lid.
18. Perform an evaculated envelope leakage test on the outer O-rings of the vent and drain port coverplates, the outer O-ring of the inner lid, and the interseal test ports by connecting a vacuum pump and a helium mass spectrometer leak detector connected to the interlid port quick-disconnect. Evacuate the interlid region to a vacuum of <1 mbar.
19. Using the helium leak detector, verify that the leakage rate into the evacuated envelope is $\leq 2 \times 10^{-7}$ cm^3/sec (helium) with a minimum leak test sensitivity of $\leq 1 \times 10^{-7}$ cm^3/sec.
20. Upon completion of the leak test, backfill the interlid region with helium (99.9% minimum purity) to 0 psig and disconnect the helium supply and leak test equipment.
21. Install the transport interlid port cover using new O-rings and torque the port cover bolts to the value specified in Table 7-1.
22. Remove the interseal port plug, attach the test fixture to the interlid port interseal test hole and perform a functional leak test on the interlid port cover O-rings by pressurizing the O-ring annulus to 15 psig and isolating for a minimum of 10 minutes. There shall be no loss in pressure during the test period. Record completion of an acceptable leakage test on the cask loading report. Upon completion of the test, equalize interseal region pressure with ambient and disconnect the test fixture. Install the interseal port plug and torque to the value specified in Table 7-1.
23. Using the lift yoke, load the cask on the transport vehicle.

24. Using a lifting sling, place the tiedown assembly over the cask upper forging between the top neutron shield plate and front trunnions. Install the front tiedown bolts and lock washers to each side of the front support.
25. Complete a Health Physics removable contamination survey of the entire package to ensure compliance with 49 CFR 173.443.
26. Using the designated lifting slings and a crane of appropriate capacity, install the top impact limiter. Install the impact limiter retaining rods into each hole and torque to the value specified in Table 7-1. Install the impact limiter attachment nuts and torque to the value specified in Table 7-1. Install the impact limiter jam nuts and torque to the value specified in Table 7-1. Install the impact limiter lock wires. Repeat the operation for the bottom impact limiter installation.
27. Install security seals through holes provided in the upper impact limiter and one of the lifting trunnions; and through holes provided in all three bolts in the interlid port cover and the pressure port cover.
28. Install personnel barrier/enclosure and torque all attachment bolts to the prescribed torque value. Install padlocks on all personnel barrier/enclosure accesses.
29. Complete radiation and contamination surveys to ensure compliance with 49 CFR 173.441 and 173.443 requirements.
30. Determine the transport index (TI) corresponding to the maximum dose rate at 1 meter from the cask. Record on the shipping documents.
31. Determine the appropriate Criticality Safety Index (CSI) assigned to the package contents in accordance with the CoC, and indicate the correct CSI on the fissile material labels applied to the package.
32. Apply placards to the transport vehicle in accordance with 49 CFR 172.500.
33. Complete the shipping documentation in accordance with 49 CFR Subchapter C and provide special instructions to the carrier/shipper for an Exclusive Use Shipment.

THIS PAGE INTENTIONALLY LEFT BLANK

7.3 Outline of Procedures for Unloading the Cask

This section presents the procedures to be followed for unloading the cask following transport of directly loaded fuel, canistered fuel or canistered GTCC waste.

7.3.1 Receiving Inspection

1. Perform radiation and removable contamination surveys in accordance with 10 CFR 20.1906, 49 CFR 173.441 and 173.443 requirements.
2. Remove the personnel barrier/enclosure and complete radiation and removable contamination surveys at the cask surfaces.
3. Visually inspect the NAC-STC while secured to the transport vehicle in the horizontal orientation for any signs of damage and record any damage. Verify that the tamper-indicating seals are in place and verify their numbers.
4. Secure the transport vehicle. Attach slings to the top impact limiter lifting points, remove impact limiter lock wires, jam nuts, attachment nuts and retaining rods, and remove the impact limiter. Store the impact limiter upright. Repeat the operation to remove the bottom impact limiter. Complete radiation and removable contamination surveys for exposed cask surfaces.
5. Release the tiedown assembly from the front support by removing the front tiedown bolts and lock washers.
6. Attach a sling to the tiedown assembly lifting eyes and remove the tiedown assembly from the transport vehicle.
7. Attach the cask lifting yoke to a crane hook with the appropriate load rating. Engage the two yoke arms with the lifting trunnions at the top end of the cask. Rotate/lift the cask to the vertical orientation and raise the cask off of the rear support structure of the transport vehicle. Place the cask in the vertical orientation in a decontamination area or other location identified by the user.
8. Wash any road dust and dirt off of the cask and decontaminate cask exterior, as required by contamination survey results.

7.3.2 Preparation of the NAC-STC Cask for Unloading

The NAC-STC may contain fuel directly loaded into a basket within the cask, or a sealed transportable storage canister containing spent fuel assemblies, Reconfigured Fuel Assemblies, Recaged Fuel Assemblies, four fuel assemblies loaded in Damaged Fuel Cans, or GTCC waste.

Unloading of fuel from the directly loaded cask basket typically takes place under water in the spent fuel pool cask loading area. Canister unloading is performed dry using a transfer cask. Canister unloading will take place in the cask receiving area, or other location identified by the user.

7.3.2.1 Preparation for Unloading the NAC-STC Cask (Directly Loaded Fuel Configuration)

1. Verify that excessive pressure does not exist in the interlid region by removing the interlid port cover and attaching a pressure test fixture to the interlid port quick-disconnect that will allow the monitoring of the cask interlid region for any pressure buildup that may have occurred during transport. If a positive pressure exists, connect a vent/drain line to the interlid quick-disconnect and vent the pressure to the off-gas system.
2. Remove the outer lid bolts and install the outer lid alignment pins and outer lid lifting eye bolts.
3. Attach the outer lid lifting device to the outer lid lifting eye bolts and the overhead crane. Remove the outer lid and place it aside in a temporary storage area. Protect the o-ring and the o-ring groove of the lid from damage.
4. Remove the port coverplates from the drain and vent ports in the inner lid with caution. Attach a pressure test fixture to the vent port that will allow the monitoring of the cask cavity for any pressure buildup that may have occurred during storage or transport. If a positive pressure exists, vent the pressure to the off-gas system.
5. Connect the cask cooldown system to the drain and vent quick-disconnects. The cask cooldown piping and controls schematic is shown in Figure 7.3-1.
6. To facilitate cooldown and to minimize thermal effects to the cask and its contents, slowly (8 – 10 gpm) fill the cask cavity with clean demineralized water (cavity is full when water flows out of the vent port drain line). Circulate water through the cask until the water leaving the vent port drain line is within 50°F of the average spent fuel pool water temperature.
7. Disconnect the fill line from the drain port quick-disconnect in the inner lid (Note: Leave a short drain line attached to the vent port quick-disconnect for continuous venting).
8. Loosen and remove all but 10, approximately equally spaced, inner lid bolts. Leave the 10 remaining inner lid bolts hand tight. Install the inner lid alignment pins at locations marked on the inner lid and the lid lifting eyebolts.

9. Remove the interlid port cover from the top forging. Disengage the vent line from the vent port quick-disconnect.
10. Attach the lifting yoke to a crane hook and engage the yoke arms with the lifting trunnions. Lift the cask and move it over to the cask loading area in the pool.
11. Spray the external surface of the cask with clean demineralized water to minimize external decontamination efforts. Slowly lower the cask into the pool. Just prior to submerging the top forging of the cask, complete the unthreading of the 10 remaining inner lid bolts and remove them.

    Note: Use caution when removing these bolts as pressure may rise slightly in the cask during the time since completion of Step 9.
12. Continue lowering the cask until it rests in the cask loading area on the pool floor.
13. Disconnect the lifting yoke from the lifting trunnions and move the yoke so that it will not interfere with fuel movements.
14. Using the inner lid lifting device attached to an auxiliary crane hook, remove the inner lid from the cask.

    Note: If the alternate method of handling the cask is being used, slowly raise the lift yoke and the inner lid using the lid alignment pins to guide movement. Move the lift yoke and the inner lid out of the area so that it will not interfere with fuel movements.
15. Place the inner lid aside ensuring that the O-rings and O-ring grooves are protected from damage. Decontaminate, as necessary, and clean all sealing surfaces.

7.3.2.2 Preparation for Unloading the NAC-STC Cask (Canistered Configuration)

1. Verify that excessive pressure does not exist in the interlid region by removing the interlid port cover and attaching a pressure test fixture to the interlid port quick-disconnect that will allow the monitoring of the cask interlid region for any pressure buildup that may have occurred during transport. If a positive pressure exists, connect a vent line to the interlid quick-disconnect and vent the pressure to the off-gas system.
2. Remove the outer lid bolts and install the outer lid alignment pins and outer lid lifting eye bolts.
3. Attach the outer lid lifting device to the outer lid lifting eye bolts and the overhead crane. Remove the outer lid and place it aside in a temporary storage area. Protect the O-ring and the O-ring groove of the lid from damage. Remove the outer lid alignment pins.

4. Remove the port coverplates from the drain and vent ports in the inner lid with caution. Attach a pressure test fixture to the vent port that will allow the monitoring of the cask cavity for any pressure buildup that may have occurred during transport. If a positive pressure exists, vent the pressure to the off-gas system.
5. Loosen and remove all inner lid bolts. Install the inner lid alignment pins at locations marked on the inner lid and the lid lifting hoist rings.
6. Using the inner lid lifting slings, attached to a suitable crane, remove the inner lid from the cask. Remove the inner lid alignment pins.
7. Place the inner lid aside ensuring that the O-rings and O-ring grooves are protected from damage. Decontaminate, as necessary, and clean all sealing surfaces.
8. If present, remove the top spacer from the NAC-STC cask cavity.
9. Install the adapter ring on the NAC-STC and torque the three captive bolts to the torque specified in Table 7-1.
10. Install the transfer cask adapter plate on the top surface of the cask and remove the handling slings.

7.3.3 Unloading the NAC-STC Cask

The NAC-STC may contain either fuel directly loaded in the cask basket, or a welded transportable storage canister. The procedures for unloading the directly loaded fuel or canisters are presented in the following.

7.3.3.1 Unloading Directly Loaded (Uncanistered) Fuel

1. Using approved fuel identification and handling procedures, withdraw one fuel assembly from the basket and deposit it in the proper storage rack location. Be careful not to contact any of the sealing surfaces on the top forging or the inner lid alignment pins.
2. Record and document the fuel movement from the cask to the fuel rack.
3. Repeat steps 1 and 2 until all fuel assemblies have been removed from the cask.
4. Attach the inner lid lifting slings to a crane hook, lift the inner lid and place it on the cask using the alignment pins to assist in proper seating. Visually verify proper lid position.

   Note: O-ring seals on the lids, port coverplates and test plugs do not require replacement for an empty packaging shipment.

5. Disconnect the lid-lifting sling from the crane hook.
6. Attach the lifting yoke to the crane hook, lower to lifting position and engage lifting arms to lifting trunnions. Slowly lift the cask out of the pool until the top of the cask is slightly above the pool water level.

   Note: As an alternative method, the cask and inner lid may be handled simultaneously. In the event that this method is chosen, instead of performing steps 4, 5 and 6, attach the lifting yoke to a crane hook and the inner lid to the lift yoke. Lower the lid and engage to the cask using the lid alignment pins. Engage lifting arms to lifting trunnions. Slowly lift the cask out of the pool until the top of the cask is slightly above the pool water level.
7. Attach a drain line to the quick-disconnect in the interlid port (located in the top forging) and allow the water to drain from the interlid region.
8. Install at least four inner lid bolts approximately equally spaced on the bolt circle to hand tight. Remove the inner lid alignment pins.
9. Move the NAC-STC cask to the cask decontamination area and disengage the lift yoke or lift beam and inner lid lifting slings if the alternate method of handling the inner lid was used. Remove the inner lid lifting eye bolts.
10. Move the cask lifting equipment away from the cask work area.
11. Install the remaining inner lid bolts and torque all of the inner lid bolts to the value specified in Table 7-1 in accordance with the bolt torquing sequence shown on the inner lid.
12. Disconnect the drain line from the quick-disconnect in the interlid port.
13. Connect a drain line to the drain port quick-disconnect and a regulated air fill line to the vent port quick-disconnect.
14. Purge the water from the cask by pressurizing to 35 to 40 psig and hold until all water is removed (observed when no water is coming from the drain line). Adjust final internal cavity pressure to 0 psig.
15. Remove the lines from the drain and the vent port quick-disconnects.
16. Install the port coverplates over the vent and drain ports in the inner lid. Torque the coverplate bolts to the value specified in Table 7-1.
17. Decontaminate the surfaces of the inner lid and the inner surfaces of the top forging.
18. Install the outer lid alignment pins. Using the outer lid lifting device, install the outer lid using the alignment pins to assist in proper seating. Remove the lid lifting device, lid lifting eyebolts, and the outer lid alignment pins.

19. Install the outer lid bolts and torque them to the value specified in Table 7-1, using the bolt torquing sequence shown on the outer lid.
20. Install the interlid port cover and torque the bolts to the value specified in Table 7-1.

7.3.3.2 Unloading Canistered Fuel or Canistered GTCC Waste

Canistered fuel or GTCC waste is unloaded from the NAC-STC using a transfer cask. The transfer cask could be used to transfer the loaded canister to a work station where the canister could be opened, or to transfer it to another storage or disposal overpack.

1. Install the lift hoist rings in the canister lid.
   Note: The canister lid may be thermally hot.
2. Attach the canister lifting sling to the hoist rings in the canister lid. Position the sling so that the free end of the sling can be engaged by the cask handling crane hook.
3. Attach the transfer cask lifting yoke to the cask handling crane hook. Engage the yoke to the lifting trunnions of the transfer cask.
4. Lift the transfer cask and move it over the NAC-STC cask. Lower the transfer cask to engage the transfer cask adapter plate. Once the transfer cask is fully seated, remove the transfer cask lifting yoke and store it in the designated location.
   Note: O-ring seals on the lids, port coverplates and test plugs do not require replacement for an empty packaging shipment.
5. Remove the shield door stops, connect the hydraulic operating system and open the transfer cask bottom doors.
6. Using tag lines, lift the canister lifting slings through the transfer cask and attach them to the crane hook.
   Note: Alternative canister handling systems may be used.
7. Raise the canister into the transfer cask just far enough to allow the transfer cask bottom doors to close. Use caution to minimize the contact between the canister and the cavity walls of the NAC-STC and of the transfer cask.
8. Close the bottom doors and install the door stops.
9. Carefully lower the canister until it rests on the transfer cask bottom doors. Disengage the canister lifting sling from the crane hook.
10. Retrieve the transfer cask lifting yoke and attach it to the transfer cask trunnions. Lift the transfer cask from the NAC-STC cask and move it to its intended destination.

11. Attach the transfer cask adapter plate-lifting slings and disconnect the hydraulic operating system.
12. Using the crane, lift the transfer cask adapter plate from the top of the cask. Move the transfer cask adapter plate to the designated storage location.
13. Detorque the three bolts and remove the adapter ring.
14. Install the inner lid alignment pins.
15. Attach the inner lid lifting fixture to the inner lid and engage the lifting fixture to the auxiliary crane. Install the inner lid in the NAC-STC using the alignment pins to assist in proper seating.
16. Disconnect the lifting fixture and remove the guide pins.
17. Install and torque the inner lid bolts to the values specified in Table 7-1 using the bolt torquing sequence shown on the inner lid.
18. Install the port coverplates over the vent and drain ports in the inner lid. Torque the coverplate bolts to the values specified in Table 7-1.
19. Decontaminate the surfaces of the inner lid and the inner surfaces of the top forging.
20. Install the outer lid alignment pins. Using the outer lid lifting device, install the outer lid using the alignment pins to assist in proper seating. Remove the lid lifting device, lid lifting eyebolts, and the outer lid alignment pins.
21. Install the outer lid bolts and torque them to the value specified in Table 7-1 using the bolt torquing sequence shown on the outer lid.
22. Install the interlid port cover and torque the bolts to the value specified in Table 7-1.

7.3.4 Preparation of Empty Cask for Transport

1. Decontaminate all surfaces of the cask to acceptable release limits as defined in 49 CFR 173.
2. Attach the lifting yoke to a crane hook and engage the yoke arms with the lifting trunnions. Lift the cask onto the transport vehicle and lower to the horizontal position.
3. Using a lifting sling, place the tiedown assembly over the cask upper forging between the top neutron shield plate and front trunnions. Install the front tiedown bolts and lock washers to each side of the front support. Torque each of the tiedown bolts.
4. Initiate Health Physics radiation and removable contamination surveys to ensure compliance with 49 CFR 173.441 and 49 CFR 173.443.

5. Using the designated lifting slings and a crane of appropriate capacity, install the top impact limiter. Install the impact limiter retaining rods into each hole and torque to the value specified in Table 7-1. Install the impact limiter attachment nuts and torque to the value specified in Table 7-1. Install the impact limiter jam nuts and torque to the value specified in Table 7-1. Install the impact limiter lock wires. Repeat the operation for the bottom impact limiter installation.
6. Apply labels to the package in accordance with 49 CFR 172.200.
7. Install the personnel barrier/enclosure and torque all attachment bolts to the prescribed torque value. Install padlocks on all personnel barrier/enclosure accesses.
8. Complete the Health Physics radiation and removable contamination surveys to ensure compliance with 49 CFR 173 requirements.
9. Complete the shipping documents.
10. Apply placards, if required, to the transport vehicle in accordance with 49 CFR 172.500.

Figure 7.3-1 Cask Cooldown Piping and Controls Schematic

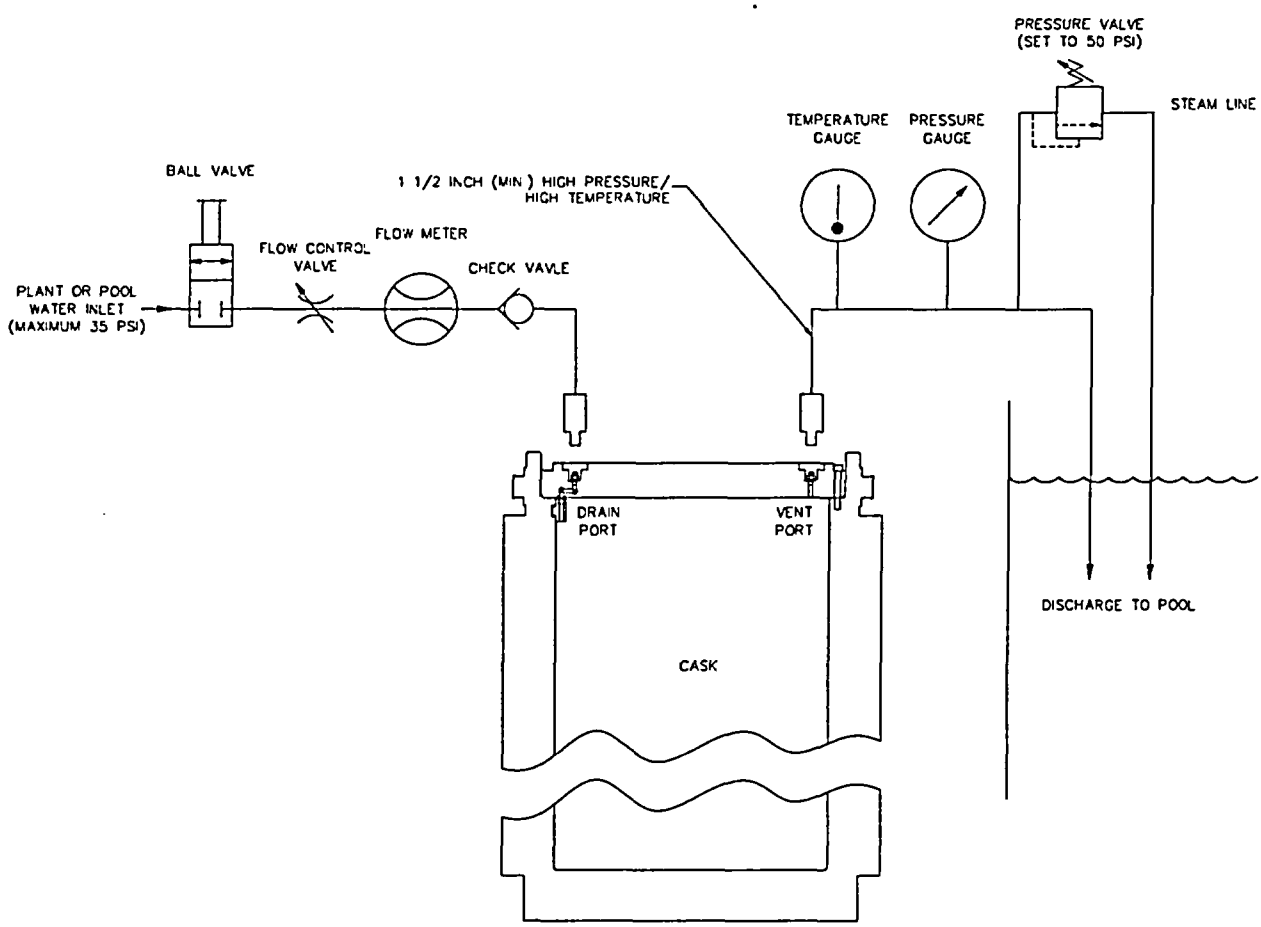

THIS PAGE INTENTIONALLY LEFT BLANK

7.4 Leak Test Requirements

This section provides the leak testing procedures used to perform the Containment System Verification Leak Tests for the NAC-STC containment boundary O-ring seals. These tests are required following cask loading operations for transport without interim storage for casks provided with metallic seals and after long-term storage in preparation for transport. For transport of uncanistered spent fuel without interim storage, casks provided with Viton O-rings are leak tested to confirm that the containment system is properly assembled for shipment. The preshipment leakage rate test confirms that there is no detected leakage from any seal to a minimum sensitivity of 1×10^{-3} ref·cm^3/sec. Detailed procedures, describing the equipment and the leak test system used to perform the leak tests, are developed for use at the licensee's facilities. The containment boundary conditions, required leak tests and leak test acceptance criteria are provided in Table 4.1-1.

The transport cask may be configured with either metallic O-rings or with Viton O-rings. The two types of O-rings may not be used interchangeably, since each O-ring type requires a different O-ring groove configuration. Consequently, the inner lid, vent and drain port coverplates and outer lid are machined with a square O-ring groove to accept metallic O-rings or are machined with a truncated triangular (dove-tail) groove to accept Viton O-rings.

Viton O-rings may be used only when directly loading spent fuel for transport without interim storage. Metallic O-rings must be used when directly loading spent fuel for an extended period of storage and for canistered contents. Metallic O-rings may be used when directly loading spent fuel for transport without interim storage. The metallic and nonmetallic O-rings have different allowable leak rates, as specified in the procedures.

7.4.1 Containment System Verification Leak Test Procedures

As described in Chapter 4, the NAC-STC primary containment boundary is designed and tested to assure that there is no leakage under any of the normal conditions of transport or accident conditions that exceeds the allowable value determined in accordance with 10 CFR 71.51. This leakage rate is verified prior to transport by the performance of leak tests on the containment boundary filled with metallic O-rings to ensure that the leakage rate is less than 2×10^{-7} cm^3/sec (helium). For casks provided with Viton O-rings, the Containment System Verification Leak Test is performed annually or after replacement of a Viton O-ring, and the cumulative leak rate is

less than 9.3×10^{-5} cm^3/sec (helium). As described in Section 4.1, the containment boundary is defined differently for transport after long-term storage than for loading for transport without interim storage. As described in this section, leak tests are performed in accordance with the requirements of ANSI N14.5-1997.

The leak test requirements and acceptance criteria performed after long-term storage in preparation for transport and performed following cask loading operations for transport without interim storage are described in Sections 7.4.2 and 7.4.3, respectively. The generic procedures used to perform leak testing are incorporated in the NAC-STC loading procedures in Section 7.2. Detailed procedures, describing the equipment and the leak test system used to perform the leak tests, are developed for use at the licensee's facilities. As noted in Section 7.1, the transportable storage canister will have been loaded, closed and sealed prior to loading into the NAC-STC. The canister is a separate inner container for the transport of damaged fuel.

Section 7.4.4 provides the procedural guidance on corrective actions to be taken in the event a leak test does not meet the acceptance criteria.

7.4.2 Leak Testing for Transport After Long-Term Storage

This section summarizes the leak test method used to demonstrate continued containment of PWR spent fuel prior to transport following an extended period of storage. The containment boundary for this transport condition is defined as Containment Condition A in Section 4.1 and requires the use of metallic O-rings in the containment boundary. In addition to the steel inner lid and port coverplates, the containment boundary is specified as the outer O-rings of the inner lid and of the vent and drain port coverplates and the O-rings of the test port plugs. As specified in the generic loading procedure, the outer lid must be removed to test the inner lid and the vent and drain port coverplates prior to transport.

To conduct the leak test, the inner seal regions (annulus between the O-rings) of the inner lid and the vent and drain port coverplates are evacuated to less than one millibar, and backfilled to 0 psig with 99.9% pure helium, and the test port plugs are reinstalled. The outer lid is reinstalled using a new metallic O-ring. The interlid region (between the inner and outer lids) is evacuated to a vacuum of 1 millibar, or less. After the vacuum condition is reached, a helium leak detector is used to sample the interlid region for helium leakage past the inner lid outer O-ring, the vent and drain port coverplate outer O-rings, and O-ring test port plugs. The allowable leak rate is

$\leq 2 \times 10^{-7}$ cm^3/sec (helium) with a minimum test sensitivity of $\leq 1 \times 10^{-7}$ cm^3/sec (helium). This test method conforms to A5.4 (evacuated envelope) of Appendix A of ANSI N14.5-1997. If helium leakage is detected exceeding the criteria, corrective action is taken as described in Section 7.4.4.

The outer lid and pressure port are tested using a pressure drop method to confirm the installation of the outer lid and pressure port O-rings. The interlid region is pressurized using the interlid port to 15 psig with air and the pressure is held for 10 minutes. No loss of pressure is permitted during the test period. Following the test, the interlid region pressure is reduced to 0 psig. The interlid port cover is installed and the annulus between the O-rings of the port cover is tested using the same method. This test confirms the installation of the interlid port cover O-rings and conforms to test method A.5.1 (gas pressure drop) of Appendix A of ANSI N14.5-1997.

7.4.3 Leak Testing for Transport After Loading without Interim Storage

This section summarizes the leak tests required to demonstrate containment of directly loaded PWR spent fuel without interim storage, or for sealed transportable storage canisters containing spent fuel or GTCC waste. The containment boundary for these transport conditions is defined as Containment Condition B in Section 4.1. In addition to the steel inner lid and port coverplates, the containment boundary is specified as the inner O-rings of the inner lid and of the vent and drain port coverplates. The inner lid O-ring and vent and drain port coverplate O-rings are leak tested using the evacuated envelope method (test description A5.4 of Appendix A of ANSI N14.5-1997) with a vacuum in the annulus between the O-rings. The containment boundary O-rings for fuel directly loaded for transport without interim storage may be either metallic or Viton. The containment boundary O-rings for canistered fuel or GTCC waste are required to be metallic O-rings. The leak detector is used to detect helium in the annulus between the O-rings. The allowable leakage rate for each metallic O-ring defined as the containment boundary is $\leq 2 \times 10^{-7}$ cm^3/sec (helium) with a minimum test sensitivity of $\leq 1 \times 10^{-7}$ cm^3/sec (helium). The allowable cumulative leakage rate for all Viton O-rings defined as the containment boundary is $\leq 9.3 \times 10^{-5}$ cm^3/sec (helium) with a minimum test sensitivity of $\leq 4.7 \times 10^{-5}$ cm^3/sec (helium). For leak testing prior to transport of a NAC-STC cask with reusable Viton O-rings, a preshipment leakage test is performed to a minimum test sensitivity of 1×10^{-3} ref·cm^3/sec. The higher sensitivity test for the Viton O-rings is performed during annual maintenance testing or when the Viton O-rings or other containment components are replaced.

As the metallic O-rings are replaced for each loaded transport canister, the higher sensitivity test is always required. The series of helium leak tests described confirms that the allowable leak rates are satisfied for the O-rings used in the containment boundary for Containment Condition B. Section 7.4.4 provides the procedural guidance on corrective actions to be taken in the event a leak test does not meet the acceptance criteria.

Following completion of the inner lid and vent and drain port coverplate leak tests, the outer lid and pressure port are tested using a pressure drop method to confirm the installation of the outer lid and pressure port O-rings. The interlid region is pressurized using the interlid port to 15 psig with air and the pressure is held for a minimum of 10 minutes. No loss of pressure is permitted during the test period. Following the test, the interlid region pressure is reduced to 0 psig. The interlid port cover is installed and the annulus between the O-rings of the port cover is tested using the same method. This test confirms the installation of the interlid port cover O-rings. These components form an additional barrier against the release of radioactive material, but are not a containment boundary.

7.4.4 Corrective Action

If a specific component containing an O-ring fails to meet the leak test acceptance criteria for that component, the component is removed and the O-ring removed. The O-ring groove is cleaned and visually inspected to ensure proper cleanliness and surface condition. A new O-ring of the appropriate type (i.e., metallic or Viton) is installed. The removed component is reinstalled and the bolts torqued to the appropriate torque value. The component is then retested in accordance with the applicable test procedure and acceptance criteria.

For the replacement of the inner lid O-ring either immediately after loading, or after extended storage for the directly loaded configuration, it will be necessary to return the cask to the spent fuel pool to remove the inner lid and allow access for inner lid O-ring replacement. For placement of the cask in the fuel pool following extended storage, the procedures for cask unloading (Section 7.3.3) are utilized to prepare and cool down the cask prior to placement in the pool. At cask storage facilities having appropriate dry transfer or hot cell facilities, the inner lid O-ring can be replaced without placement of the cask in a fuel pool for shielding purposes. Prior to removal of the inner lid, a gas sample should be taken at the vent port to verify the condition in the cavity environment. If there are indications that fuel has failed during the storage period, care should be exercised in both flooding the cask and in removing the inner lid.

In the canistered configuration, the NAC-STC inner lid metallic O-rings may be replaced without returning to the pool since the canister confines and shields the spent fuel or GTCC waste.

7.6 Procedures for Loading and Unloading the Transportable Storage Canister

This section generally describes the procedures for loading and closing, and for opening and unloading, the Transportable Storage Canister. This description is provided for information only since it is intended that the canister be closed, and opened if necessary, using the transfer cask. As described in this SAR, the canister is designed to be transported in the NAC-STC, or stored in the NAC-MPC Storage System for an extended period. The NAC-MPC storage system is described in the NAC-MPC SAR, Docket No. 72-1025. The NAC-MPC FSAR contains more detailed procedures for loading and unloading fuel in the Transportable Storage Canister. Loading of GTCC waste must meet the modified generic criteria as described below.

The transfer cask is primarily a lifting device used to move the canister assembly, and to provide biological shielding when it contains a loaded canister. The transfer cask is used for the vertical transfer of the canister between work stations and the storage or transport casks.

The principal closing and sealing operations are the draining, drying, and helium backfilling of the canister, and sealing it by welding the shield lid, penetration port covers, and structural lid in place. The principal opening operations are cutting the lid welds or canister side wall to remove the structural lid, opening the vent port to sample the canister atmosphere, cutting the shield lid welds to remove the shield lid, and removing the spent fuel or GTCC waste.

7.6.1 Loading and Closing the Transportable Storage Canister

This procedure assumes that the canister and the transfer cask are positioned in the decontamination area or other suitable work station. The staging area should be within the handling "footprint" of the cask handling crane.

1. Visually inspect the Transportable Storage Canister (canister) to ensure that it is clean and free of debris.
2. Place the canister in the transfer cask.
3. Place the transfer cask and canister into the fuel loading pool.
4. Load the previously designated spent fuel assemblies or the GTCC waste into the canister.
   Note: Spent fuel and GTCC waste must be loaded in separate canisters.
5. Place the shield lid on top of the loaded canister.

6. Remove the transfer cask with the loaded canister from the fuel loading pool.
7. Insert the drain tube assembly and remove approximately 50 gallons of water from the Yankee-MPC canister or 65 gallons from the CY-MPC canister.
8. Weld the shield lid in place and verify the adequacy of welds with liquid penetrant examinations. Record results of examinations as required.
9. Pressurize the Yankee-MPC canister to 15 psig with air, nitrogen, or helium and hold the pressure for 10 minutes. For the CY-MPC canister, a pressure of 20 psig is to be used and held for 10 minutes.
10. Release the pressure.
11. Drain the remaining water from the canister.
12. Vacuum dry the canister.
13. For fuel canisters, evacuate to $\leq$ 3mm Hg. For GTCC waste canisters, evacuate to $\leq$ 10mm Hg.
14. Backfill canister with helium to a pressure of one atmosphere.
15. For fuel canister only, evacuate canister to a vacuum of $\leq$ 3mm Hg.
16. For fuel canister only, backfill canister with helium to a pressure of one atmosphere.
17. Remove vacuum drying and helium equipment from the canister vent and drain.
18. Install vent and drain port covers and weld into place. Verify the adequacy of welds with liquid penetrant examinations. Record results of examinations as required.
19. Install the leak test lid and connect the leak detector system to the test lid. Evacuate the test lid volume and verify the leaktightness of the shield lid welds.
20. Install the structural lid in place.
21. Weld the structural lid in place and verify the adequacy of welds with liquid penetrant examinations. Record results of examinations as required.
22. Perform a smear survey of the accessible areas of the canister to ensure that the surface contamination is within limits.
23. Install the transfer cask retaining ring.
24. Decontaminate the external surface of the transfer cask to the limits established for the site.

At this point, the loaded canister may be transferred into the NAC-STC in accordance with the procedures presented in Section 7.1, contingent upon the loaded contents meeting the requirements for the authorized contents for the transport cask system, as described in the cask Certificate of Compliance.

7.6.2 Opening and Unloading the Transportable Storage Canister

Circumstances could arise that dictate the opening of a previously loaded canister and the removal of the stored spent fuel or GTCC waste. This section describes the basic operations needed to open the sealed canister. It is assumed that the canister is positioned in the transfer cask and that the transfer cask is in a suitable work station. The work station must provide for control of airborne radioactive material and gases that could potentially be released from the open canister. It is not intended that the canister be opened while it is in the NAC-STC cask. The principal mechanical operations are the cutting of the closure welds, filling with water, and removing the spent fuel or GTCC waste. Supplemental shielding is used as required.

1. Place the canister in the transfer cask.
2. Survey the top of the canister to establish the radiation level and contamination level at the structural lid.
3. Set up the weld cutting equipment to cut the structural lid weld.
4. Operate the cutting equipment to cut the structural lid weld.
5. Remove the cutting equipment and using a three-legged sling, remove the structural lid.
6. Cut the weld joining the vent port cover to the shield lid.
7. Remove the vent port cover.
8. Sample the canister cover gas and vent any pressure in the canister to a radioactive waste handling system.
9. Cut the weld joining the drain port cover to the shield lid and remove the drain.
10. Attach a nitrogen gas line to the drain port quick-disconnect and a discharge line from the vent port quick-disconnect to an off-gas handling system.
11. Continue to flow nitrogen through the line until there is no evidence of fission gas activity in the discharge line (or 10 minutes minimum).
12. Attach a source of clean water with a minimum temperature of 70°F and a maximum supply pressure of 15 psig to the drain port quick-disconnect. Replace the vent port quick-disconnect with a straight-through fitting fitted with a Viton o-ring, and attach the discharge water line. Slowly start the flow of clean water to establish a flow rate of 5 (+ 3, - 0) gpm.
13. Continue to flow water through the canister until the exit water temperature stabilizes to a temperature below 200°F.
14. Stop the flow of water and remove the connection to the drain line.
15. Set up the weld cutting equipment to cut the shield lid weld.

16. Remove approximately 50 gallons of water from the Yankee-MPC canister or 65 gallons of water from the CY-MPC canister.
17. Using a hydrogen gas detector, check the vent port for hydrogen gas. Purge the hydrogen gas if the concentration of hydrogen gas exceeds 2.4%.
18. Cut the shield lid weld. Attach the shield lid lifting sling.
19. Attach the clean water line to the transfer cask.
20. Retrieve the transfer cask lifting yoke and engage the transfer cask lifting trunnions.
21. Move the transfer cask over the pool and lower the bottom of the transfer cask to the surface. Start the flow of clean water to the transfer cask annulus. Continue to lower the transfer cask, as the annulus fills with clean water, until the top of the transfer cask is about 4 inches above the pool surface. Hold the cask in this position until clean water fills the top of the transfer cask.
22. Lower the transfer cask to the bottom of the cask loading area and remove the lifting yoke.
23. Attach the shield lid lifting sling to the crane hook.
24. Slowly lift the shield lid. Move the shield lid to one side after it is raised clear of the transfer cask.
25. Visually inspect the spent fuel or GTCC waste.

At this point, the spent fuel or GTCC waste can be removed from the canister.

Chapter 8

8.0 ACCEPTANCE TESTS AND MAINTENANCE PROGRAM

This chapter describes the acceptance tests and maintenance program to be used for the NAC-STC to assure compliance with 10 CFR 71 and IAEA Safety Series No. TS-R-1 acceptance and maintenance criteria. Also included is a general description of the fabrication of the NAC-STC cask and the transportable storage canister with additional information on the lead pouring requirements and procedures.

Where required, specific procedures for inspection, special processes, and testing will be developed to support the entire manufacturing process with a Quality Assurance (QA) program that has been approved in accordance with 10 CFR 71 Subpart H and IAEA Safety Series No. TS-R-1.

THIS PAGE INTENTIONALLY LEFT BLANK

Any evidence of permanent deformation, cracking, galling of the load bearing surfaces or unacceptable dye penetrant results shall be cause for rejection of the rotation trunnion recesses or related welds.

8.1.2.3 Hydrostatic Testing

A hydrostatic test shall be performed on the NAC-STC cask containment boundary, prior to final acceptance of the cask, in accordance with the ASME Code, Section III, Division I, Article NB-6200. The hydrostatic test pressure shall be at least 76 psig, which is 150 percent of the Maximum Normal Operating Pressure. This test shall be performed in accordance with approved written procedures. All pressure retaining components, appurtenances, and completed systems shall be pressure tested.

The vent port will be used for the test connection. Only the vent port quick-disconnect will be installed during the testing. The hydrostatic test will be performed with the inner lid and the drain port coverplate installed and torqued.

The hydrostatic test system components, although not part of the cask containment boundary, will be visually inspected prior to the start of the hydrostatic test. Leakage from the valves or connections will be corrected prior to the start of the hydrostatic test.

The test pressure gauge installed on the cask will have an upper limit of approximately twice that of the test pressure. The hydrostatic test pressure shall be maintained for a minimum of 30 minutes, during which time a visual inspection is made to detect any evidence of a leak. Any evidence of a leak during the minimum hold period will be cause for rejection.

After completion of the hydrostatic test, the cask containment boundary will be dried and prepared for visual and/or dye penetrant inspections as appropriate. The components of the cask containment boundary shall be visually inspected. All accessible welds within the cavity shall be liquid penetrant inspected. Any evidence of cracking or permanent deformation is cause for rejection of the affected component.

8.1.2.4 Pneumatic Bubble Testing of the Neutron Shield Tank

A pneumatic bubble test of the neutron shield tank will be performed in accordance with Section V, Article 10, Appendix I, of the ASME Code following final closure welding of the bottom closure plates. The pneumatic test pressure shall be 12.5 + 1.5/-0 psig, which is 125 percent of the relief valve set pressure. The test shall be performed in accordance with approved written procedures.

During the test, the two relief valves on the neutron shield tank will be removed. One of the relief valves threaded connections will be used for connection of the air pressure line and test pressure gauge. The other relief valve connection will be plugged with a threaded plug.

Following introduction of pressurized air into the neutron shield, a 15-minute minimum soak time will be required. Following completion of the soak time, approved soap bubble solution will be applied to all fin to shell, shell to end plate, and end plate to outer shell welds. The acceptance criteria for the bubble test will be no air leak from any tested weld as indicated by continuous bubbling of the solution. If an air leak is indicated, the weld shall be repaired in accordance with approved weld repair procedures and the pneumatic bubble test shall be repeated until no unacceptable air leak is observed.

8.1.3 Leak Tests

Leak tests shall be performed in accordance with Section 7.3 of ANSI N14.5-1997, containment System Fabrication Verification, on the NAC-STC cask containment boundary seals to verify proper fabrication of the cask. The leak tests shall be performed in accordance with approved written procedures. Leak tests shall be performed on the cask containment weldment, the inner lid O-rings, the inner lid interseal test port plug, the vent port coverplate O-rings and its interseal test plug, and the drain port coverplate O-rings and its interseal test plug.

Following completion and NDE of the containment weldment, a helium leak test of the containment weldment shall be performed in accordance with the requirements of ASME Code, Section V, Article 10. The containment weldment shall have an indicated leak rate of less than 2×10^{-7} cm^3/sec (helium), using a minimum test sensitivity of 1×10^{-7} cm^3/sec (helium). If a leak is detected, the affected weld shall be rejected. Rejected welds shall be repaired in accordance with the requirements of ASME Code, Section III, Division I, Subsection NB, Article

NB-4450. The repaired weld area shall be retested and reinspected in accordance with the above test requirements and acceptance standards.

The containment boundary closures may use either metallic O-rings or nonmetallic Viton O-rings. The two O-ring types require different O-ring groove designs and, therefore, may not be used interchangeably and must be used with the inner lid, vent and drain port coverplates and outer lid having the appropriate O-ring groove machined in the component. The two O-ring types also have different allowable leak rate criteria as described in Section 4.1. Consequently, different acceptance criteria are applied to the metallic and nonmetallic O-ring configurations.

The detailed procedures for the NAC-STC cask leak testing are presented in Section 7.4.

Metallic O-Ring Testing

The final fabrication verification leak testing of the containment boundary closures using metallic O-rings consists of a series of leak tests using (minimum 99.9 percent pure) helium as a tracer gas and a helium leak detection system calibrated to a minimum sensitivity of 1×10^{-7} cm^3/sec (helium).

The test plug O-rings on the coverplates and the interseal test plug will be tested using the vacuum air pressure rise method. The metallic O-rings in the inner lid and the vent and drain port coverplates will be tested to ensure that the leakage rate is $\leq 2 \times 10^{-7}$ cm^3/sec (helium). The tracer gas shall be introduced on the containment side of the O-ring in all cases. The test procedures and methods will be selected to ensure that the sensitivity of each leak test is $\leq 1 \times 10^{-7}$ cm^3/sec (helium).

A leak rate past any seal or closure that exceeds 2.0×10^{-7} cm^3/sec (helium) shall be cause for rejection of the item being tested. Seal replacement or other corrective actions will be taken to correct the leak. The item shall then be retested and inspected in accordance with the above test requirements and acceptance standards.

Viton O-Ring Testing

The final fabrication verification leak testing of the containment boundary closures using Viton O-rings consists of leak tests of the closure O-rings using (minimum 99.9 percent pure) helium as a tracer gas and a helium leak detection system calibrated to a minimum sensitivity of 9.3×10^{-5} cm^3/sec (helium).

The test plug O-rings on the coverplate and the interseal test plug will be tested using the vacuum air pressure rise method. The Viton O-rings in the inner lid and the vent and drain port coverplates will be tested to ensure that the leak past all three O-rings will not exceed a cumulative total of 9.3×10^{-5} cm^3/sec (helium). The tracer gas shall be introduced on the containment side of the O-ring in all cases. The test procedures and methods will be selected to ensure that the sensitivity of each leak test is 4.7×10^{-5} cm^3/sec (helium) or better.

A leak rate past any seal or closure, or the cumulative leakage rate of all containment seals, exceeding 9.3×10^{-5} cm^3/sec (helium) shall be cause for rejection of the item(s) being tested. Seal replacement or other corrective actions will be taken to correct the leak. The item shall then be retested and inspected in accordance with the above test requirements and acceptance standards.

8.1.4 Component Tests

Tests performed on individual components are designed to ensure that the component meets the design requirements for correct and proper operation of the cask system.

Acceptance criteria are established based on the functions and design requirements of the component being tested.

8.1.4.1 Valves

There are no valves that are part of the NAC-STC containment boundary for transport. Quick-disconnects are installed in the vent, drain and interseal test port openings in the inner lid to

8.1.7 Neutron Absorber Tests

Two alternate neutron poison materials, BORAL and TalBor, have been qualified by NAC for use in the fuel tubes. BORAL is manufactured by AAR Advanced Structures (AAR), under a Quality Assurance/Quality Control program in conformance with the requirements of 10 CFR 50, Appendix B. The manufacturing process consists of several steps: the first step is the mixing of the aluminum and boron-carbide powders that form the core of the finished material, with the amount of each powder a function of the desired ^{10}B areal density. The methods used to control the weight and blend of the powders are patented and proprietary processes of AAR. The mixture of powders is placed in an aluminum box with walls approximately one inch thick. The top lid is welded in place. This "ingot" is heated for several hours and then is hot-rolled to produce the sheet of design thickness. The rolling process densifies and bonds the powder mixture. The aluminum box walls become the cladding for the Al-B_4C core.

TalBor is manufactured by Talon Composites, Inc. (TalBor was formerly called Boralyn, and was produced by Alyn Corporation. Alyn Corporation went out of business and Talon Composites acquired the major production equipment and the patent rights for Boralyn. TalBor is essentially identical to Boralyn.) TalBor is manufactured and controlled using a Quality Assurance program that is compliant with the applicable requirements of 10 CFR 50, Appendix, B. TalBor is a metal matrix composite (MMC). The aluminum and B_4C powders are mixed to the specified ^{10}B areal density and the powder mixture is vacuum sintered and hot pressed to achieve a fully dense billet. The billet is extruded, then cut and rolled to the design thickness.

After manufacturing, test samples from each batch of neutron absorber (poison) sheets shall be tested to verify the presence, proper distribution, and minimum weight percent of ^{10}B. Neutron transmission testing or augmented wet chemistry testing may be used. The tests shall be performed in accordance with approved written procedures.

8.1.7.1 Neutron Absorber Material Sampling Plan

The neutron absorber sampling plan is selected to demonstrate a 95/95 (95% probability and 95% confidence level) statistical confidence level in the neutron absorber sheet material compliance with the specification. In addition to the specified sampling plan, each sheet of material is visually and dimensionally inspected using at least 6 measurements (along the edges near each corner and the longitudinal centerline) on each sheet. No rejected neutron absorber sheet is used. The sampling plan is supported by written and approved procedures.

The sampling plan requires that a coupon sample be taken from each sheet of the first set of 100 sheets of absorber material. Thereafter, coupon samples are taken from 20 randomly selected sheets from each set of 100 sheets. This 1 in 5 sampling plan continues until there is a change in lot or batch of constituent materials of the sheet (i.e., boron carbide powder, aluminum powder, or aluminum extrusion), or a process change, at which time the sampling process is reinitiated as previously described. The sheet samples are indelibly marked and recorded for identification. This identification is used to document neutron absorber test results, which become part of the quality record documentation package.

8.1.7.2 Wet Chemistry Test Performance

An approved facility with chemical analysis capability shall be selected to perform the wet chemistry tests. The tests will ensure the presence of boron and enable the calculation of the ^{10}B areal density. Acceptability of the uniformity of boron distribution is based on the manufacturer's material qualification tests.

The most common method of verifying the acceptability of neutron absorber material is the wet chemistry method—a chemical analysis where the aluminum is separated from a sample with known thickness and volume. The remaining boron-carbide material is weighed and the areal density of ^{10}B is computed. A statistical conclusion about the BORAL or TalBor sheet from which the sample was taken and that batch of sheets may then be drawn based on the test results and the established manufacturing processes previously noted.

8.1.7.3 Neutron Transmission Test Performance

An approved facility with a neutron source and neutron detection capability shall be selected to perform the described tests, if the neutron transmission test method is used. The tests will assure that the neutron absorption capacity of the material tested is equal to, or higher than, the given reference value and will verify the uniformity of boron distribution. The principle of measurement of neutron absorption is that the presence of boron results in a reduction of neutron flux between the thermalized neutron source and the neutron detector—depending on the material thickness and boron content.

Typical test equipment will consist of thermal neutron source equipment, a neutron detector and a counting instrument. The test equipment is calibrated using a known standard, whose ^{10}B content has been checked and verified by an independent method such as chemical analysis. This calibration process shall be repeated daily (every 24 hours) while tests are being performed.

8.1.7.4 Acceptance Criteria

The neutron transmission test results shall be considered acceptable if the minimum ^{10}B areal density is determined to be equal to, or greater than, that specified on the fuel tube drawings. Any specimen not meeting the acceptance criteria shall be rejected and all of the sheets from that batch shall be similarly rejected unless coupons from each individual absorber plate are tested and confirmed to meet or exceed the specified areal density.

8.1.8 Transportable Storage Canister

The transportable storage canister is constructed of Type 304L stainless steel and is fabricated by welding. If circumferential welds are required to join two shell sections, the seam welds shall not be aligned within 45° circumferentially. The welded cylinder is closed at the bottom by a circular plate welded to the shell wall. The top of the cylinder is closed by two field-installed circular plates, welded to the canister shell wall following fuel loading.

The transportable storage canister is a welded closed component. The canister serves as the confinement boundary component of the NAC-MPC System during storage of spent fuel in the vertical concrete cask.

The finished surfaces of all canister welds are visually examined in accordance with ASME Code Section V, Article 9, to verify that the components are assembled in accordance with the License Drawings and that the components are free of nicks, gouges, and other damage. The acceptance criteria for the visually examined welds is in accordance with ASME Code Section VIII, Division 1, UW-35 and UW-36 and Section III, Subsection NB, NB-4424 and NB-4427.

The seam and girth welds in the transportable storage canister shell are full-penetration welds that are radiographic (RT) examined in accordance with ASME Code Section V, Article 2. The acceptance criteria for the RT-examined welds is that specified in ASME Code Section III, Subsection NB, Article NB-5320. The canister shell to bottom plate weld is a full-penetration double-bevel weld with an inside fillet weld that is ultrasonic examined in accordance with ASME Code Section V, Article 5, with acceptance criteria as specified in ASME Code Section III, Subsection NB, Article NB-5330. The final surfaces of the seam and girth welds in the canister and the canister shell to bottom plate weld are also liquid penetrant examined in accordance with ASME Code Section V, Article 6, with the acceptance criteria being that specified in ASME Code Section III, Subsection NB, Article NB-5350.

accordance with ASME Code Section V, Article 6, with the acceptance criteria being that specified in ASME Code Section III, Subsection NB, Article NB-5350.

Field installed partial-penetration groove welds attach the shield (inner) lid to the canister shell and the vent port and the drain port coverplates to the shield lid, after the canister is loaded. The structural lid is attached to the canister shell by a partial penetration weld. The root and final surfaces of the shield lid weld are liquid penetrant examined in accordance with the ASME Code Section V, Article 6. Acceptance criteria are as specified in ASME Code Section III, Division 1, Subsection NB, Article NB-5330. The vent port and the drain port coverplate to shield lid welds are liquid penetrant examined, i.e., root and final surfaces, in accordance with ASME Code Section V, Article 6. Acceptance criteria is specified in ASME Code Section III, Division 1, Subsection NB, Article NB-5350. The structural lid weld is either ultrasonic (UT) examined in accordance with the ASME Code, Section V, Article 5 with the final weld surface liquid penetrant examined in accordance with ASME Code, Section V, Article 6, or progressively liquid penetrant examined in accordance with the ASME Code, Section V, Article 6. Acceptance criteria is specified in ASME Code Section III, Division 1, Subsection NB, Article NB-5330 (ultrasonic) and Article NB-5350 (liquid penetrant). Following completion of the shield lid to canister shell weld and the drain port coverplate to shield lid welds, the canister is leak tested in accordance with ASME Code Section V, Article 10, Appendix V, using a minimum leak rate test sensitivity of 1×10^{-7} cm^3/sec (helium).

The fabricator of the transportable storage canister will establish a written weld inspection plan in accordance with an approved quality assurance program. The weld inspection plan will include visual, liquid penetrant, ultrasonic, and radiographic examination. In addition, the weld inspection plan will identify the welds to be examined, the sequence of the examinations, the type of examination method to be used, and the criteria for acceptance of the weld in accordance with the applicable sections of the ASME Code.

8.2 Maintenance Program

To ensure that the NAC-STC packaging is in compliance with the requirements of the regulations, the Certificate of Compliance, and this application, a cask Maintenance Program for the NAC-STC shall be established. The cask Maintenance Program shall specify the inspections, tests, and replacement of components to be performed, and the frequency and schedule for these activities. This chapter describes the overall requirements of the Maintenance Program and establishes the frequency and schedule for the maintenance activities. The detailed, written inspection, test, component replacement, and repair procedures shall be included in the NAC-STC Operations Manual. The NAC-STC Operations Manual will be issued to Users of the packaging and will be prepared and issued prior to first use of the cask in each configuration.

There are no maintenance requirements for the welded canister containing either fuel or GTCC waste.

8.2.1 Structural and Pressure Tests of the Cask

The four lifting trunnions and the two rotation trunnion recesses shall be visually inspected prior to each shipment. The visual inspections shall be performed in accordance with approved written procedures, and inspection results shall be evaluated against established acceptance criteria.

Evidence of cracking on the load bearing surfaces shall be cause for rejection of the affected trunnion until an approved repair has been completed, and the surfaces re-inspected and accepted. Such repairs shall be implemented and documented in accordance with an approved QA program.

The lifting trunnions are also inspected annually in accordance with Paragraph 6.3.1(b) of ANSI N14.6. All accessible trunnion welds and accessible welds that are part of the load path are visually inspected for permanent deformation, galling, or cracking. Liquid penetrant examinations of welds and load bearing surfaces are performed in accordance with the ASME Code, Section V, Article 6 [3]. Liquid penetrant acceptance standards are those of Paragraph NF-5350 of the ASME Code, Section III, Division 1.

During periods of nonuse of the transport cask, the inspection of the trunnions may be omitted provided that the trunnions are inspected in accordance with this section prior to the next use.

8.2.2 Leak Tests

Leak tests are performed in accordance with the methodologies and requirements of ANSI N14.5-1997, using approved written procedures.

8.2.2.1 Containment Fabrication Verification Leak Test

The containment fabrication verification leak test is performed on each NAC-STC cask at the fabricator's facility in accordance with Section 8.1.3.

8.2.2.2 Containment Periodic Verification Leak Test

The periodic verification leak test shall be performed on each cask after the third use (prior to fourth cask loading sequence) and every twelve months thereafter to verify the containment capability and whenever a replaceable containment component is installed. Metallic O-rings used for the containment boundary seals shall be replaced during each cask loading operation and the seals leak tested in accordance with the containment system periodic verification leak test requirements. Viton O-rings shall be inspected prior to each use and replaced as necessary. Viton O-ring performance shall be demonstrated by leak testing prior to each shipment

The periodic verification leak test shall be performed using approved written test procedures and in accordance with the test requirements and acceptance criteria established in Section 8.1.3 for the containment fabrication verification leak test.

During periods when the cask is not in use for transport, the periodic verification leak test need not be performed on an annual basis, but shall be reperformed prior to returning the cask to service and use as a transport package.

8.2.2.3 Acceptance Criteria

For the containment verification leak tests, the leak rate for containment boundary metallic O-rings shall be less than or equal to 2×10^{-7} cm^3/sec (helium). The minimum test sensitivity for

both the fabrication verification and verification leak tests shall be 1.0 x 10^{-7} cm^3/sec (helium). For Viton O-rings, the maximum (total) permissible leak rate for all containment boundary O-rings shall be less than or equal to 9.3 × 10^{-5} cm^3/sec (helium). The minimum test sensitivity for both the fabrication verification and verification leak tests shall be 4.7 × 10^{-5} cm^3/sec (helium). Unacceptable leak test results shall be cause for rejection of the component tested. Corrective actions, including repair or replacement of the O-rings and/or closure component, shall be taken and documented as appropriate. The leak test shall be repeated and accepted prior to returning the cask to service.

8.2.3 Subsystems Maintenance

There are no subsystems maintenance requirements on the NAC-STC.

8.2.4 Valves, Rupture Disks and Gaskets on the Containment Vessel

There are no valves on the NAC-STC packaging providing a containment function. Four quick-disconnects, one each on the vent, drain, inner lid interseal test and interlid ports, are provided for ease of cask operation.

The quick-disconnect shall be inspected during each cask loading and unloading operation for proper performance and function. As necessary, the subject quick-disconnect shall be replaced. The quick-disconnects shall be replaced every two years during transport operations, and following fuel unloading after extended storage.

There are no rupture disks on the NAC-STC containment vessel.

All O-rings on the NAC-STC shall be visually inspected for damage during each cask operation. All metallic O-rings shall be replaced during each cask loading sequence. PTFE O-rings shall be replaced if damage is noted during the visual inspection and every two years during transport operations. Viton O-rings shall be replaced annually and as required, based on leak testing results and inspections during operations.

8.2.5 Shielding

The gamma and neutron shields of the NAC-STC packaging do not degrade with time or usage. The radiation surveys performed by licensees prior to transport and upon receipt of the loaded cask provide a continuing validation of the shield effectiveness of the NAC-STC.

8.2.6 Periodic Thermal Test

A periodic thermal test program will be established for each operational NAC-STC packaging. During use of the packaging for transport operations, the periodic thermal test will be performed every five years, or prior to the next use if the period exceeds five years. For NAC-STC packagings utilized for extended storage operations exceeding five years, the periodic thermal test will be performed prior to transport. The periodic thermal test shall be performed in accordance with written, approved procedures.

8.2.6.1 Periodic Thermal Test Set-Up

For periodic thermal test performance, the cask will be in a vertical orientation, loaded with spent fuel, and at thermal equilibrium. For the periodic thermal test, thermal equilibrium is defined as a temperature change of ≤ 3°F/hr at a single centerline fin tip location.

The decay heat load and fuel cycle history of the fuel assemblies loaded in the cask will be known and recorded on the test data sheets. Thermocouples and/or a surface pyrometer calibrated to an accuracy of ± 2°F will be used for temperature measurements during the test.

8.2.6.2 Periodic Thermal Test Procedure

With the cask in a vertical orientation located in a cask preparation area or on a storage pad, a temperature measurement will be taken at a marked cask neutron shield shell centerline fin tip and recorded. Repeat temperature measurement at the marked fin tip location until thermal equilibrium criteria of a temperature change of ≤ 3°F/hr is met. Upon verification of thermal equilibrium, the test temperature measurements will be performed as follows:

- eight (8) fin tip locations will be marked and identified at 45° intervals in the top one-third of the neutron shield shell;
- eight (8) fin tip locations will be marked and identified at 45° intervals in the central one-third of the neutron shield shell;
- eight (8) fin tip locations will be marked and identified at 45° intervals in the bottom one-third of the neutron shield shell;

which are not in compliance with the Certificate of Compliance shall cause the cask to be rejected for transport use until repairs and/or replacement of the cask or component are performed, and the component reinspected and accepted.

The results of the visual inspections, leak tests, shielding and radiological contamination surveys; fuel identification information for the package contents; date, time, and location of the cask loading operations; and remarks regarding replaced components shall be included in the cask loading report for each loaded cask transport. The requirements of the cask loading report shall be detailed in the NAC-STC Operations Manual.

8.2.8 Maintenance Program Schedule

Table 8.2-1 presents the overall maintenance program schedule for the NAC-STC.

Table 8.2-1 Maintenance Program Schedule

Task	Frequency
Cavity Visual Inspection	Prior to Fuel Loading
Basket Visual Inspection	Prior to Fuel Loading
O-ring Visual Inspection	Prior to Fuel Loading
Outer Lid, Inner Lid and Port Coverplate Bolt Visual Inspection	Prior to installation during each use
Cask Visual and Proper Function Inspections	Prior to each Shipment
Lifting and Rotation Trunnion Visual Inspection Liquid Penetrant Inspection of surfaces and accessible welds	 Prior to each Shipment Annually during use
Maintenance Periodic Leak Rate Test of Inner Lid and Port Coverplate O-rings	For Viton O-rings, annually or when replaced. For metallic O-rings, prior to each shipment
Preshipment Leak Rate Test	Prior to shipment for casks with Viton O-rings
Transport Impact Limiter Visual Inspection	Prior to each shipment
Quick-disconnect Inspection for Proper Function	During each Cask Loading/Unloading Operation
Quick-disconnect Replacement	Every two years during transport operations
Metallic O-ring Replacement	Prior to installation for a loaded transport
Viton O-Ring Replacement	Annually, or more often, based on inspection or leak test results
Inner and Outer Lid Bolt Replacement	Every 240 bolting cycles (Every 20 years at 12 cycles per year)
PTFE O-ring Replacement	Every two years during transport operations or as required by inspection
Periodic Leakage Rate Test	Performed within 12 months prior to each shipment for Viton O-rings. No testing needed for out-of-service packaging.
Periodic Thermal Test	Every five years during transport operations, or prior to transport following extended storage periods exceeding five years.