AREVA

AREVA

Advanced Test Reactor
Fresh Fuel Shipping Container (FFSC)

Certification Test Plan

Packaging Technology, Inc.
under contract to
Idaho National Laboratory

Rockville, MD December 14, 2006

Purpose

- ATR FFSC ETU test results
- ATR FFSC certification test plans
- Project Status and Schedule

Design Overview

- Type AF Package
- Transport by NNSA and commercial carrier – road transport only
  - Single package via commercial carrier
  - Multiple packages via NNSA SST
- Two payloads currently considered
  - Advanced Test Reactor (ATR) – primary payload
    - Weight: 22 lbs
    - Length: 66.19" min to 66.31" max
    - Fissile content: 1,200 g U-235 max
    - ~60% of an A2
  - Scrap fuel plates
- Package features:
  - Loaded weight ~ 275 lbs
  - Dimensions overall ~ 74" X 8" square
  - Payload cavity ~ 5.76" ID X 67-7/8" long

AREVA

ATR FFSC
Certification Plan Briefing
Engineering Tests

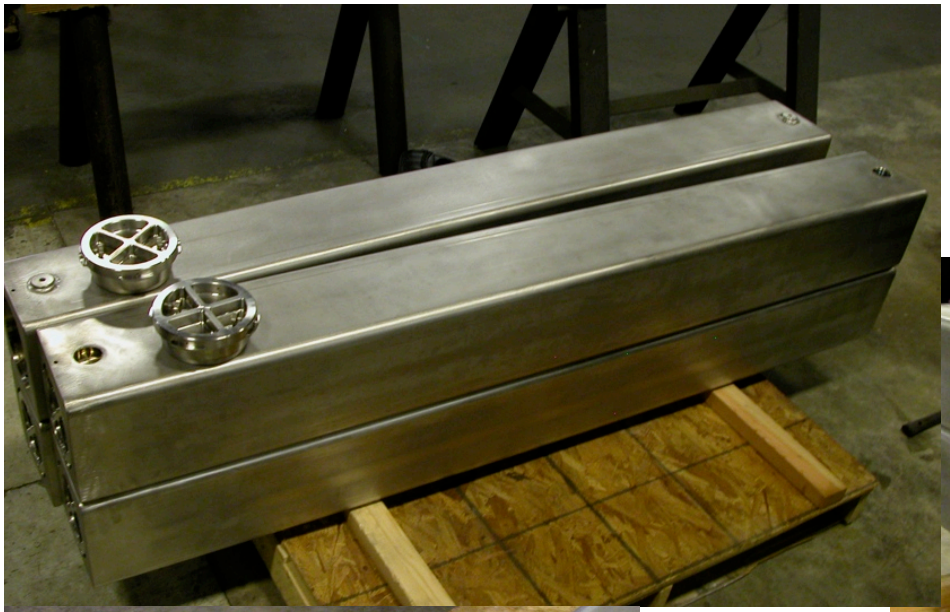

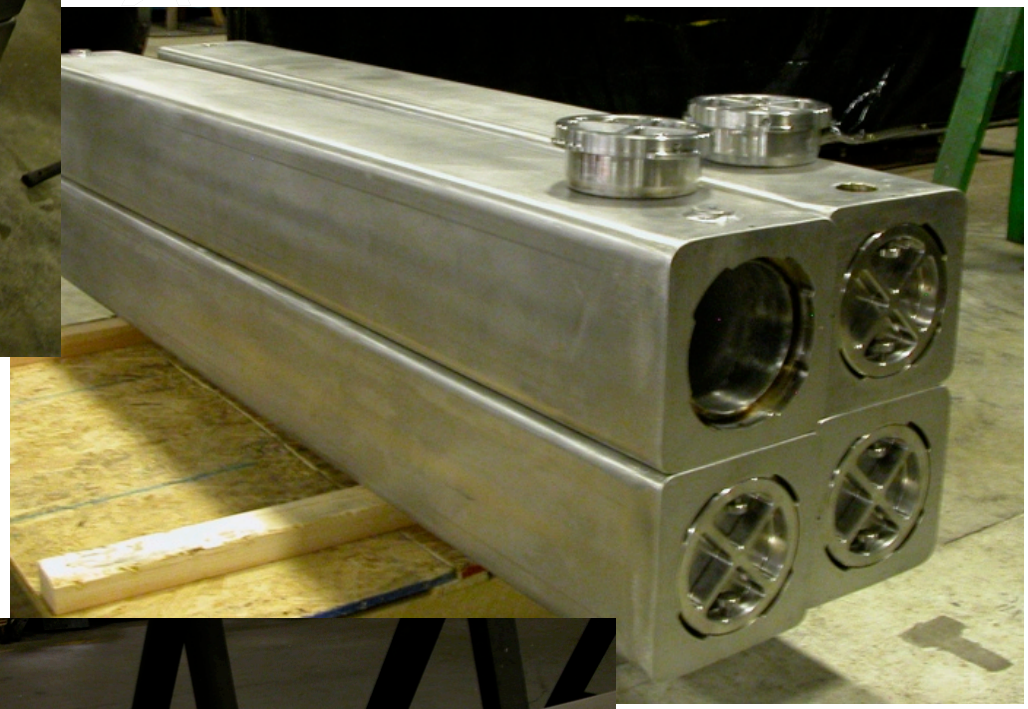

PACKAGING
TECHNOLOGY, INC.

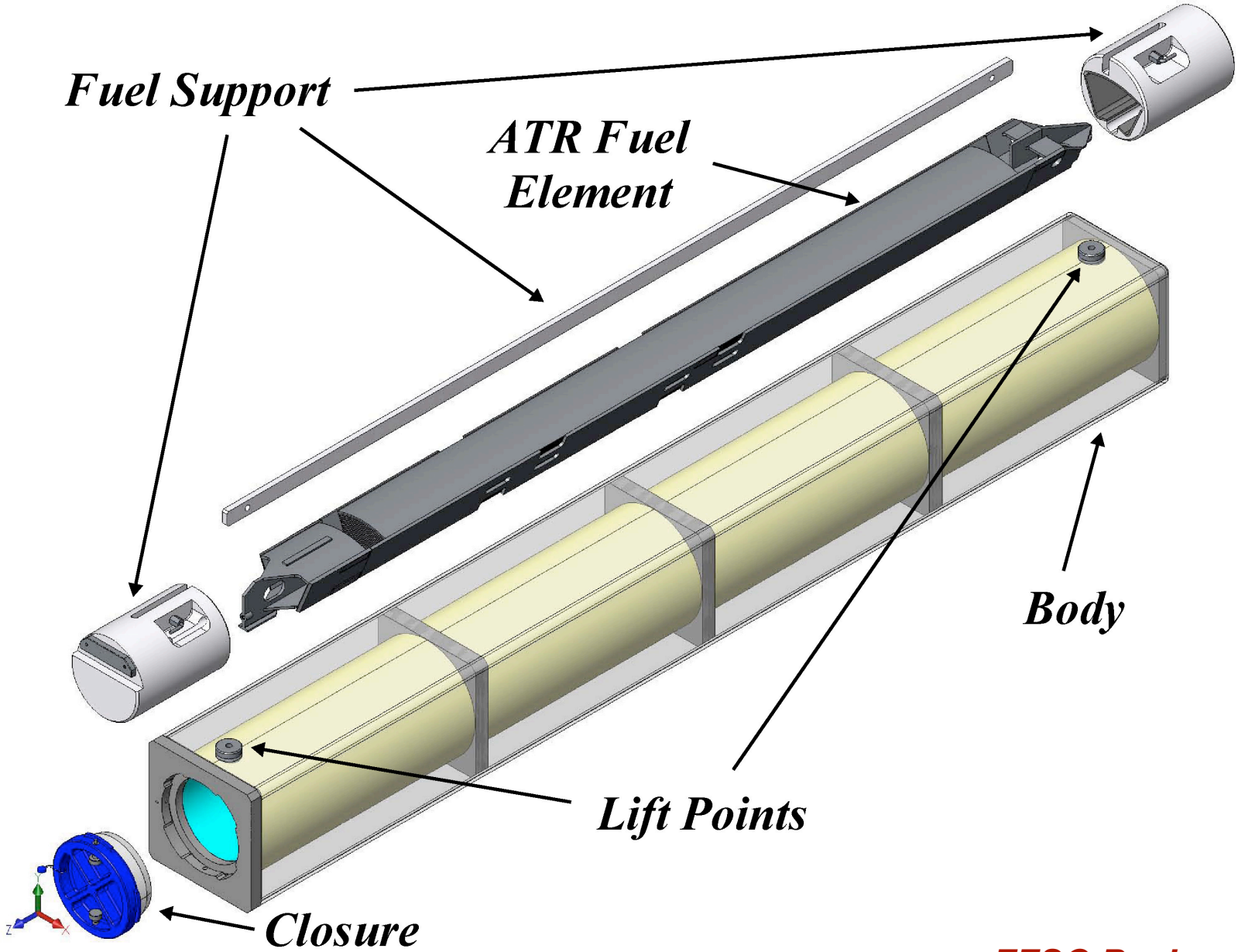

FFSC Package –
Engineering Test Unit

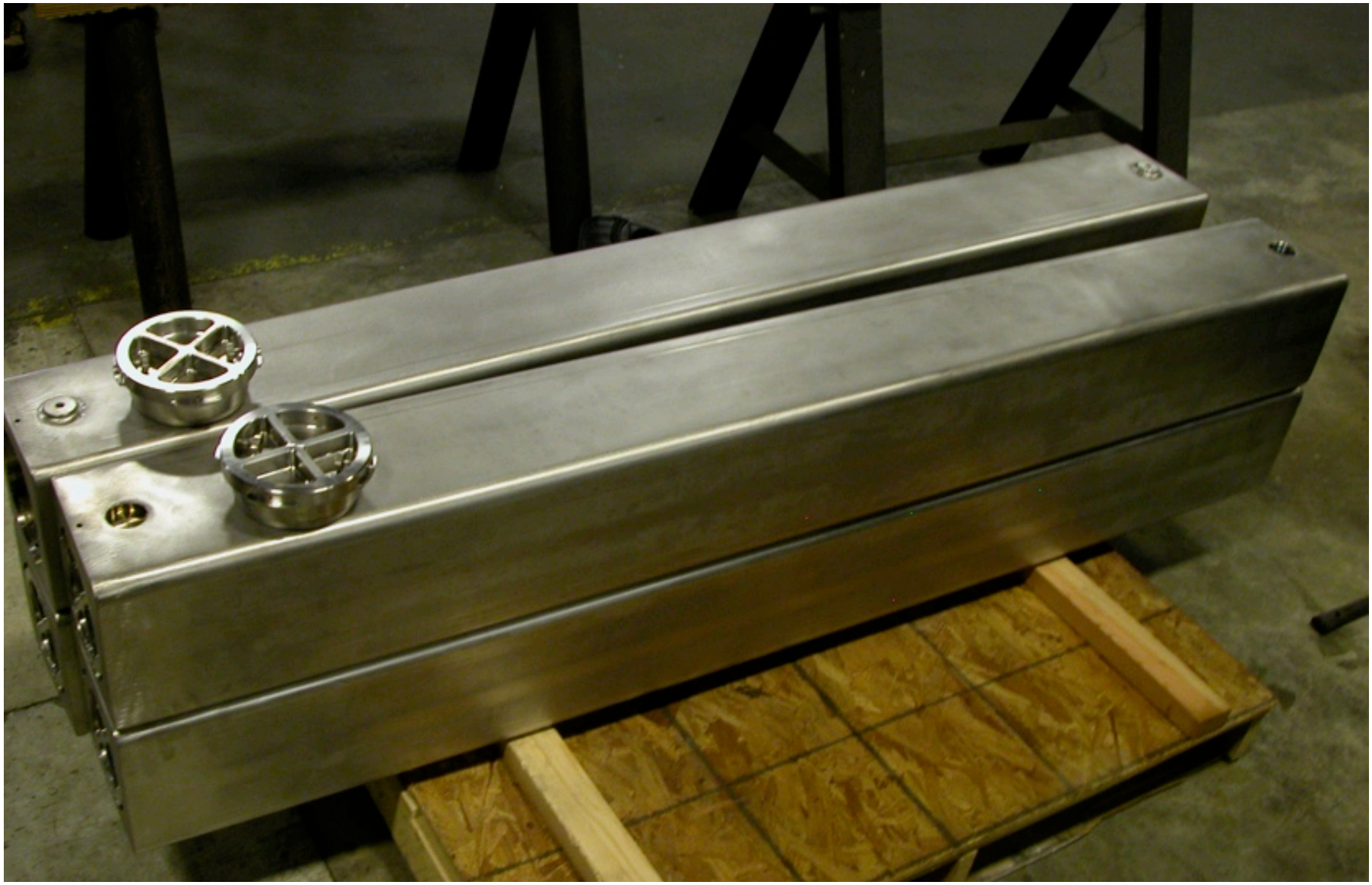

Test Summary

Drop ID	Description	Purpose
ED1	Flat side drop, pocket side down. Fuel oriented with Plate 19 at top position.	Verify: • Closure remains on package • At least one locking pin remains engaged • Fuel and packaging geometry compliant with criticality analysis assumptions.
ED2	Flat side drop, rotated 90° from CD1.	Verify: • Closure remains on package • At least one locking pin remains engaged • Fuel and packaging geometry compliant with criticality analysis assumptions.
ED3	Flat side drop, lifting features down	Verify resistance to outer shell tearing around lift features (fire path concern).

Test Summary - cont

Drop ID	Description	Purpose
ED4	Bottom end drop (vertical).	Verify: • Fuel element does not penetrate into insulation pocket • Fuel retains sub-critical geometry. • Package geometry remains within criticality analysis assumptions.
ED5	CG over top edge.	Verify: • Closure remains on package • At least one locking pin remains engaged • Fuel and packaging geometry compliant with criticality analysis assumptions. • Fuel element does not penetrate into insulation pocket

ETU Test Results Summary

- Closure remained secure - Yes ☑ No ☐
- Fuel retained within packaging - Yes ☑ No ☐
- ATR element retained geometry - Yes ☑ No ☐
- HAC fire related:
  - Annular space remained sealed - Yes ☑ No ☐
  - Insulation remained in place - Yes ☐ No ☑
- Overall packaging geometry remained intact - Yes ☑ No ☐

Certification Tests

- Certification Test Unit (CTU) configuration
  - Packaging
  - Payload
- Planned structural tests
- Criticality analysis cases to be considered

ATR FFSC
Certification Plan Briefing

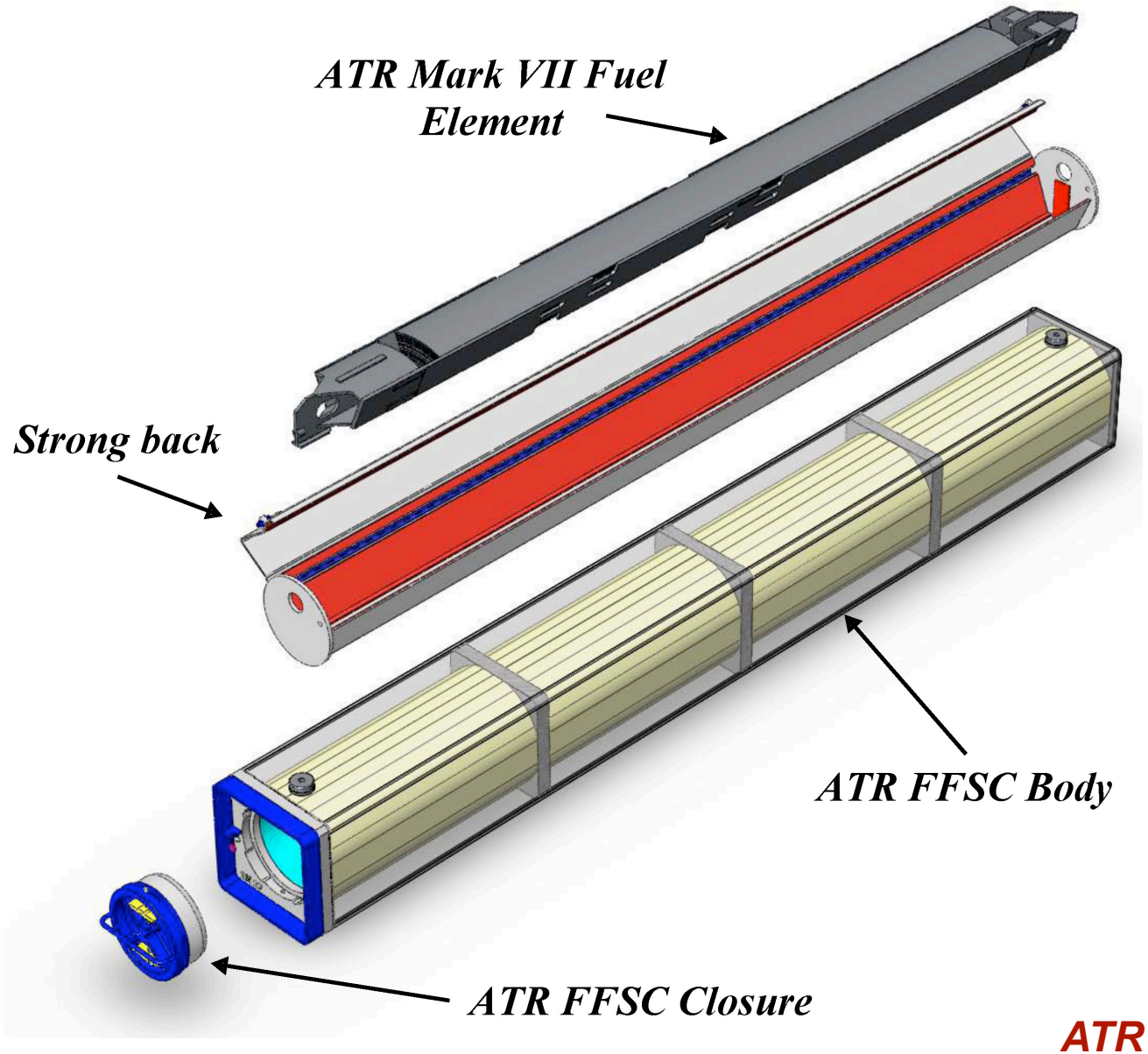

ATR FFSC

ATR FFSC
Certification Plan Briefing

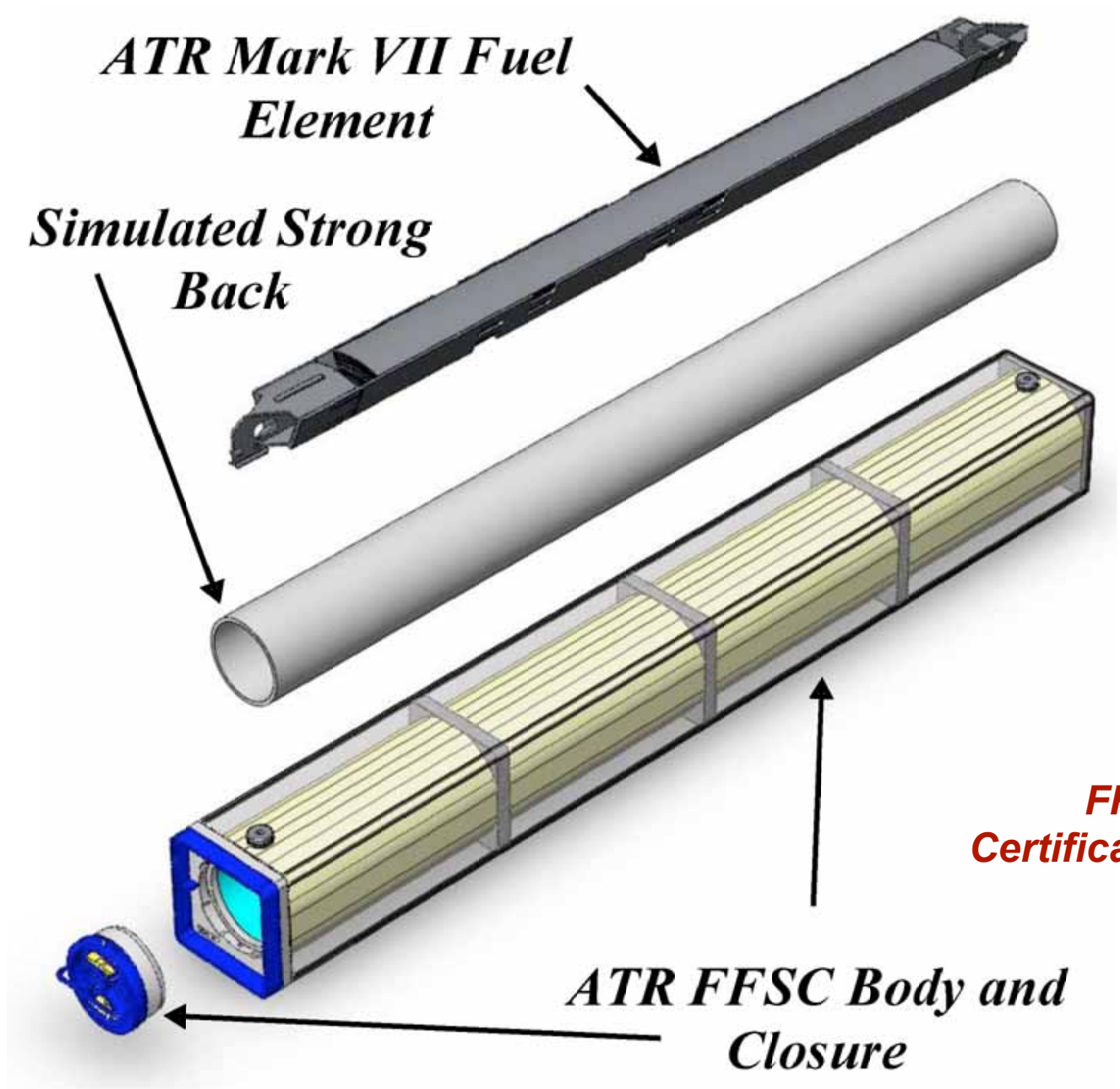

FFSC Package – Certification Test Unit

Certification Test Unit (CTU)

- CTU will be prototype of production ATR FFSC package; with one exception
- Exception - strong back
  - Desire to classify strong back as not important to safety
  - Simulated strong back provides no support to fuel element
  - Simulated strong back weight accounts for increase in weight of low enriched uranium fuel (LEU)
- Payload - Mark VII ATR fuel element (~900 grams HEU)

Certification Plans

- 10CFR71.45 – Lifting and tie-down
  - Lifting §(a)
    - Lift points designed for weight of one package
    - Compliance demonstrated by analysis
  - Tie-down §(b)
    - Tie-downs are not structural part of package for either single or racked packagings
    - Lift points to be disabled during transport
    - Lift points subjected to 9 meter free drop and puncture bar tests

Certification Plans

- 10CFR71.71, NCT – demonstrated by a combination of test, analysis, and reasoned argument
- 10CFR71.73(c), HAC
  - Free drop §(1) – by test
  - Crush §(2) – not applicable
    - Mass <1,100 lb (~ 324 lb with payload)
    - Density > 62.4 lb/ft^3 (~105 lb/ft^3 for empty package)
  - Puncture §(3) – by test
  - Thermal §(4) – by analysis
  - Immersion §(5)
    - No seals, assumed to flood
    - Annular space dry and flooded
  - Immersion – all packages §(6) – by analysis

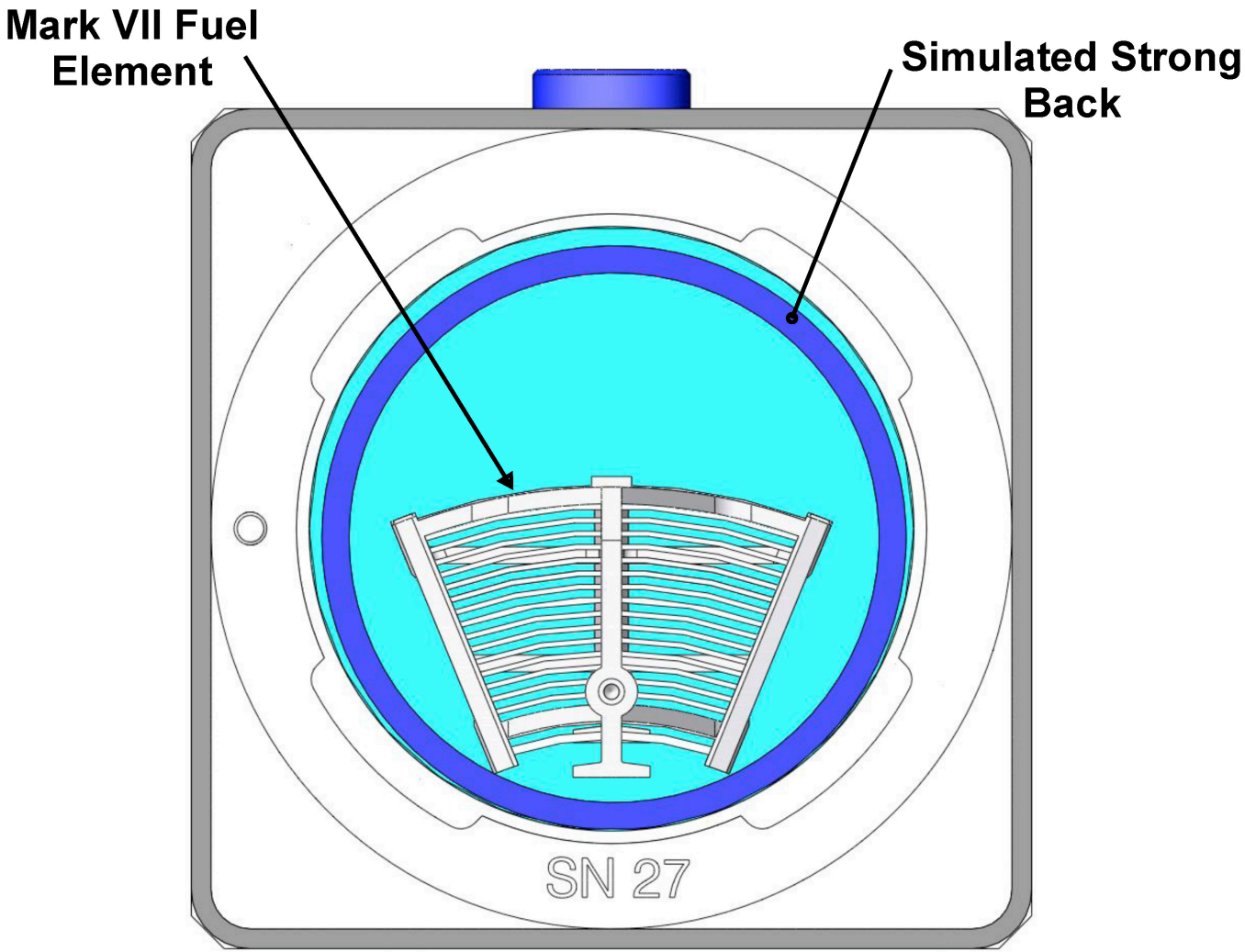

CTU configured for CD1

Test Summary

Drop ID	Description	Purpose
CD1	Flat side drop, pocket side down. Fuel oriented with Plate 19 at top position.	Verify: • Closure remains on package • At least one locking pin remains engaged • Fuel and packaging geometry compliant with criticality analysis assumptions.
CD2	Flat side drop, rotated 90° from CD1.	Verify: • Closure remains on package • At least one locking pin remains engaged • Fuel and packaging geometry compliant with criticality analysis assumptions.
CD3	Flat side drop, lifting features down	Verify resistance to outer shell tearing around lift features (fire path concern).

Test Summary - cont

Drop ID	Description	Purpose
CD4	Bottom end drop (vertical).	Verify: • Fuel element does not penetrate into insulation pocket • Fuel retains sub-critical geometry. • Package geometry remains within criticality analysis assumptions.
CD5	CG over top corner.	Verify: • Closure remains on package • At least one locking pin remains engaged • Fuel and packaging geometry compliant with criticality analysis assumptions. • Fuel element does not penetrate into insulation pocket

Test Summary - cont

Drop ID	Description	Purpose
CP1	CG over center of closure	Verify: • Closure remains on package. • At least one locking pin remains engaged.
CP2	CG over side, 30° oblique	Verify resistance of outer shell to puncture bar penetration.

Issues/Concerns

- Dispersible material concern at Sandia
- Completely encapsulate fuel
  - Welded end plates on simulated strong back
  - No impact on safety classification of strong back
  - No ability for interim examination of fuel - cannot penetrate simulated strong back for borescope inspection
- Sandia security plan cost under review

Criticality Cases

Case	Water - Within Fuel	Water - Surrounding Fuel	Water - Outer/Inner Annular Volume
NCT-1 (single package)	No	No	No
HAC-1 (single package)	Yes	Yes	Yes
NCT-2 (5N array)	No	No	No
HAC-2 (2N array)	No	No	No
HAC-3 (2N array)	Yes	Yes	Yes
HAC-4 (2N array)	No	Yes	No
HAC-5 (2N array)	Yes	No	No
HAC-6 (2N array)	Yes	Yes	No
HAC-7 (2N array)	No	Yes	Yes
HAC-8 (2N array)	Yes	No	Yes
HAC-9 (2N array)	No	No	Yes

Bounded by other cases

Project Status & Schedule

- Schedule
  - Concept briefing – 8/30/06
  - Certification test
    - Test plan briefing – 12/14/06
    - CTU fabrication – December 2006
    - Perform certification tests – February 2007
  - Submit application – 6/14/07 (anticipate 4 month review)
  - Receive RAI – 10/8/07
  - Issue license – December 2007