10.7 Criticality Evaluation for MARK 22 Fuel

A Mark 22 fuel assembly consists of two concentric fuel tubes with uranium-aluminum cores containing a total of 3.2 kilograms of uranium-235 as shown in Figure X-14. The cores are clad with Type 8001 aluminum and the assembly previously included inner and outer targets, which have been removed. The uranium was initially enriched to contain 66-80 w/o uranium-235. An enrichment of 80 w/o uranium-235 was used in the criticality analysis as a bounding case. The densities used in the analyses were obtained directly from the manufacturer and are listed in Table X-10.

Table X-10
Mark 22 Fuel Densities

Isotope	Inner Core (atoms/barn-cm)	Outer Core (atoms/barn-cm)
U-235	1.9887-3	2.0288-3
U-236	2.3300-4	2.3275-4
U-238	2.1426-4	2.1391-4
Aluminum	5.6357-2	5.6363-2

Cross-section sets were prepared by NITAWL using infinite dilution. Dancoff factors are not applicable for this assembly because of the annular cylinder geometry and resonance calculations were conservatively ignored in these analyses. The cross-section set used for these analyses is the 27 group version of the ENDF-B/IV library. These cross-sections were not collapsed or weighted, and were passed directly from NITAWL to KENO-IV. The output for NITAWL is given in Appendix E. Oak Ridge National Laboratory has validated the codes and cross-section set used in the analyses and shows that SCALE is conservative for reflected, highly enriched uranium systems.

Two Mark 22 assemblies or one Mark 22 assembly with the two cores separated will be transported in the NLI-1/2 cask; therefore, two quadrants of the four-quadrant "Rockwell basket" will contain fuel. The criticality analyses were performed for the bounding case of two adjacent intact fuel

assemblies as shown in Figure X-15. The cask geometry that was modeled in KENO-IV is shown in Figure X-16. This analysis resulted in a k_{eff} of 0.533. Values for k_∞ were calculated for the Mark 22 assembly at different pitches. The assembly was assumed to be moderated by heavy water as it is in the reactor. The most reactive pitch is approximately 26 centimeters, which cannot be achieved by two Mark 22 assemblies in the NLI-1/2 cask. The low k_{eff} of 0.533 is then understandable when it is realized that the fuel was analyzed in a light water, under moderated and poisoned configuration. The input and output for this case are given in Appendix D. Table X-12 demonstrates that the loaded cask meets the criteria established for Fissile Class I packages, as determined by 10 CFR 71.57.

An alternate configuration of the fuel was also modeled to simulate a hypothetical accident scenario. The fuel was evaluated as two cylinders centered in adjacent quadrants as shown in Figure X-17. The accident configuration yielded a k_{eff} lower than 0.533. This analysis shows that the initial annular configuration of the Mark 22 fuel assembly is the most reactive one as was the case for the Mark 42 assembly. The criticality results for the different cases are presented in Table X-11. Table X-12 demonstrates that the loaded cask meets the criteria established for Fissile Class I packages, as determined by 10 CFR 71.57. The results of the criticality evaluation for the NLI-1/2 cask containing two Mark 22 fuel assemblies show that k_{eff} does not exceed 0.533.

Table X-11
Mark 22 Fuel Criticality Results Summary

Case	k_{eff}
Normal Operation	0.533
Hypothetical Accident	0.363

Page Added
February 1990

Table X-12

SUMMARY OF CRITICALITY EVALUATION FOR MARK 22 FUEL ASSEMBLIES

FISSILE CLASS I

NORMAL CONDITIONS	
Number of undamaged packages calculated to be subcritical (Fissile Class I must be infinite)	Infinite
Optimum interspersed hydrogenous moderation (required for Fissile Class I)	yes
Closely reflected by water (required for Fissile Class II and III)	yes
Package size, cm^3	60,240
ACCIDENT CONDITIONS	
Number of damaged packages calculated to be subcritical	Infinite
Optimum interspersed hydrogenous moderation, full water reflection	yes
Package size, cm^3	60,240
Other Transport Index	Not applicable

Page Added
February 1990

Figure X-14
MARK 22 ASSEMBLY CROSS SECTION

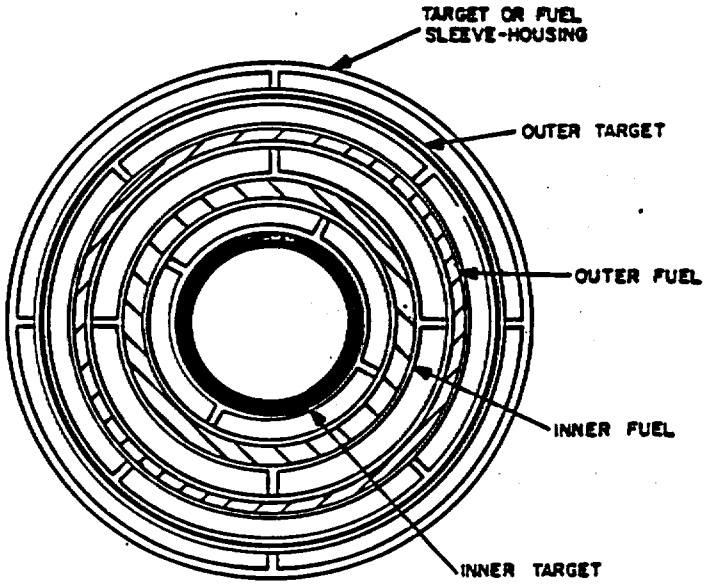

MARK 22
Cross Section
NOT TO SCALE

Dimensions (inches) and Characteristics:

	Universal Sleeve-housing	Outer Target			Fuel Tubes						Inner Target		
					Outer			Inner					
		Cladding	Core	Both	Cladding	Core	Both	Cladding	Core	Both	Cladding	Core	Both
Material	Al	Al	Li-Al	-	Al	^{235}U-Al	-	Al	^{235}U-Al	-	Al	Li-Al	-
Length	251.68[a]	170.50	159	-	163.00	150	-	161.50	150	-	174.44	163	-
Ow	4.110	3.700	3.642	-	3.200	3.140	-	2.353	2.293	-	1.590	1.530	-
Iw	4.010	3.540	3.600	-	2.892	2.952	-	1.895	2.055	-	1.235	1.295	-
Mid circle dia	3.740	3.230	-	-	-	-	-	2.862	-	-	1.965	-	-
Thickness[b]	0.030	0.030[d] 0.029[e]	0.021	0.080	0.030	0.094	0.154	0.030	0.119	0.179	0.030	0.118	0.178
Weight, lb	33.6[d]	-	-	16.1	-	-	26.8	-	-	23.1	-	-	14.2
^{235}U, g	-	-	-	-	-	1680	-	-	1520	-	-	-	-
g/ft	-	-	-	-	-	134.4	-	-	121.6	-	-	-	-
^{6}Li, g	-	-	11.93	-	-	-	-	-	-	-	-	33.83	-
g/ft	-	-	0.90	-	-	-	-	-	-	-	-	2.48	-
Cross-sectional area, in.^{2}	0.670	0.628	0.342	0.970	0.574	0.900	1.474	0.488	0.813	1.301	0.250	0.586	0.836

	Outer	Outer Middle	Inner Middle	Inner	Dead Space
Channel flow area, in.^{2}	1.840	1.740	2.142	1.092	1.198
Total assembly					
Volume displacement, in.^{3a}		1145			
Weight, lb[a]		118.8			

Page Added
February 1990

Figure X-15

MARK 22 ACTUAL CASK LOADED

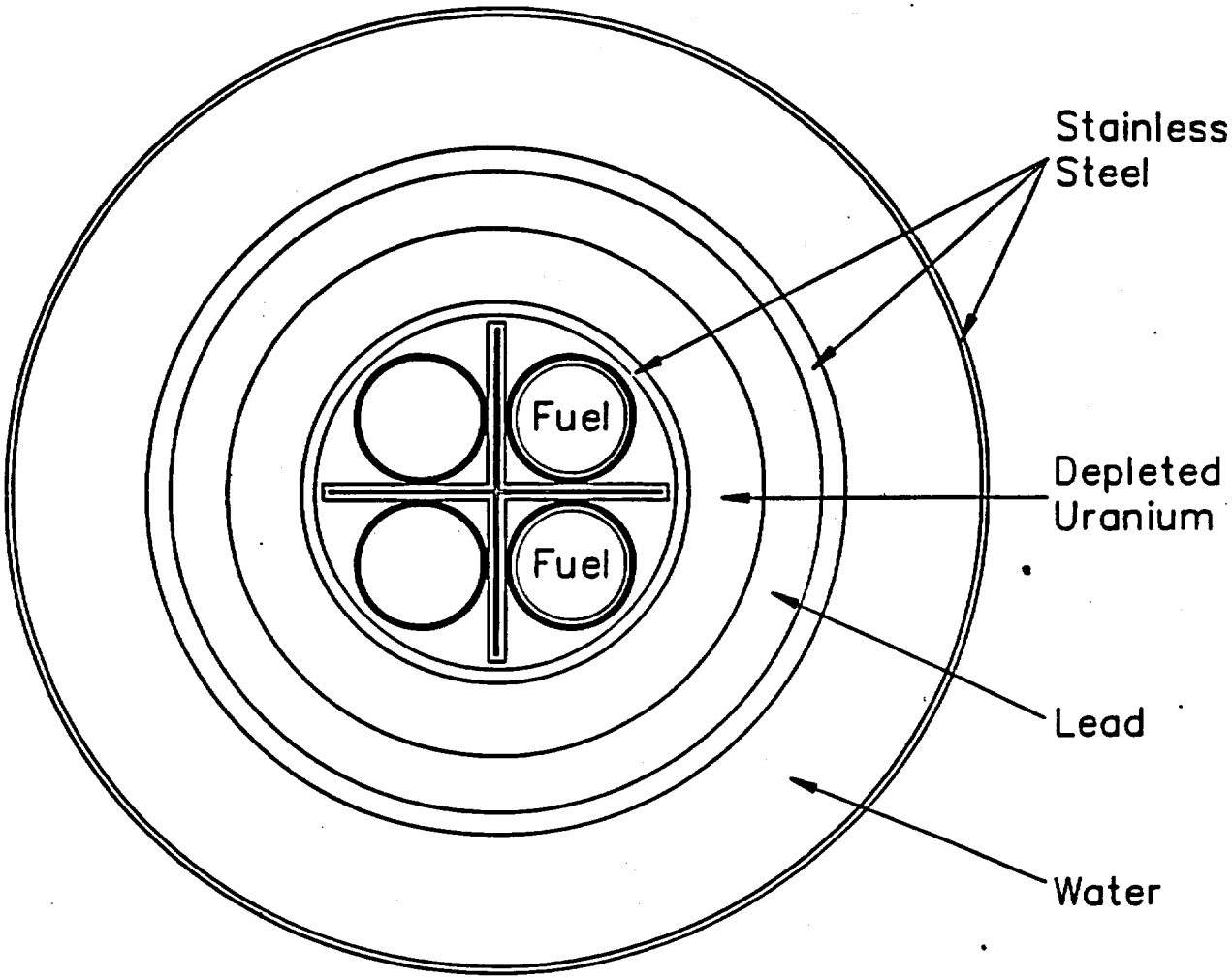

Page Added
February 1990

Figure X-16
MARK 22 KENO Model

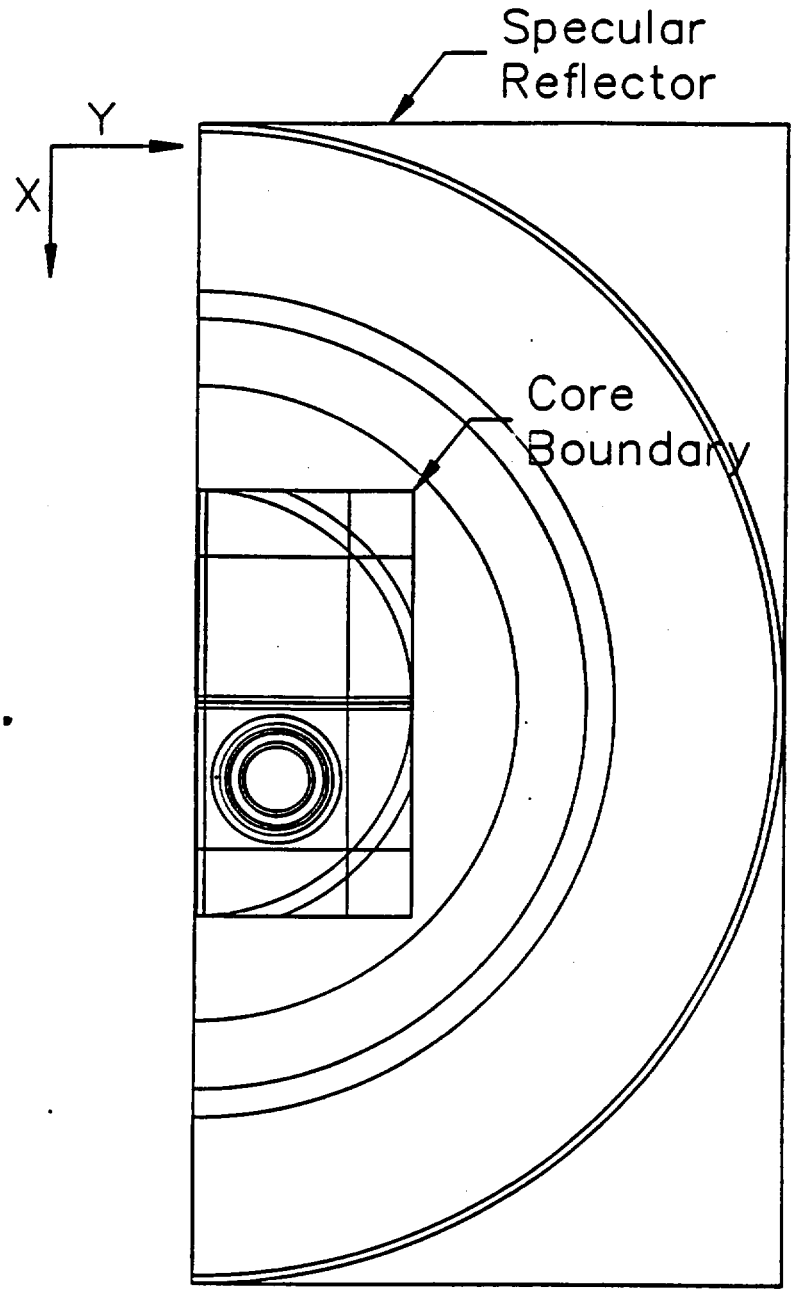

Figure X-17
MARK 22 KENO Model
Hypothetical Accident

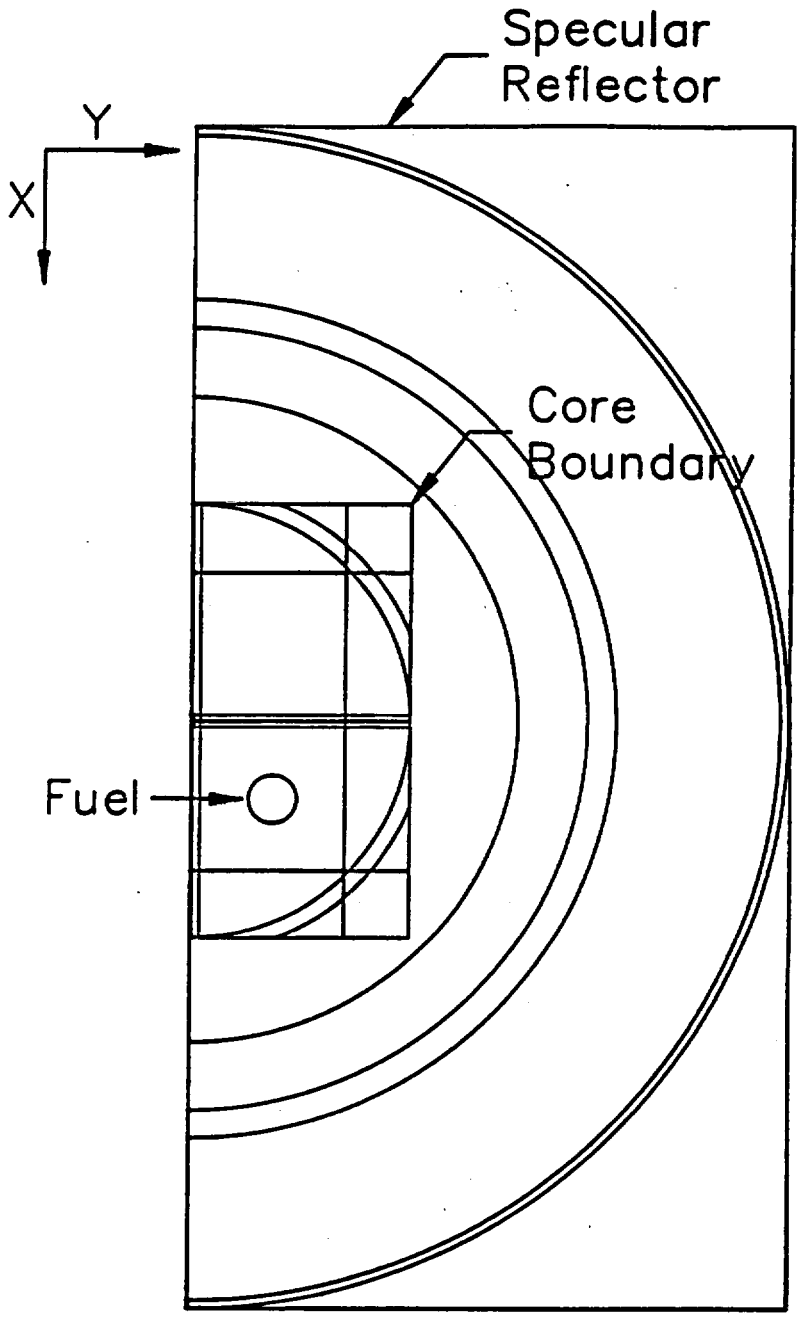

Page Added
February 1990

This page intentionally left blank.

10.8 CRITICALITY EVALUATION FOR FERMI-1 AND EBR-II FUELS

Introduction

The AMPX/KENO-IV computer system was used in conjunction with a 27 energy group SCALE nuclear data library to calculate k-effectives for both fuel types in normal operation and hypothetical accident scenarios. The NULIF computer code maintained by Babcock and Wilcox was used to determine the optimum pitches of the fuel types within the cans containing them. NULIF also calculates the Dancoff coefficient and effective moderator cross-section required by the NITAWL module of AMPX. The fuel region was "homogenized" using the XDRNPM module of AMPX and the resulting fuel was modeled using the KENO-IV mixed box geometry. The NLI-1/2 cask was modeled as concentric cylinders of Uranium (depleted), lead, steel, water, and steel using the actual cask dimensions except for the inner Uranium layer. This layer intersects with the core boundary of the mixed box representation and the inside Uranium radius was adjusted accordingly. This results in excess water at the outside corners of the core region and a small reduction in the depleted Uranium shield of the cask. All analyses were performed with an "infinite" fuel length. The longest actual active fuel length (156.8 inches for the EBRII) is less than the Boral plate length (167 inches), so that the four fuel regions are separated by Boral at any axial location.

Page Added
Oct. 1990

FERMI-1 FUEL PARAMETERS

1. Fuel assembly consists of 140 rods arranged in a 2.4" by 2.4" array. Outer channel is 2.693" square. Some assemblies are in cans that are 2.928" square. They are stored in a water pool so that all Na has been removed.

2. The rods are U/Mo alloy (10% Molybdenum) with 25.6% U-235 enrichment. They are clad with Zr 5 mils thick, metalurgically bonded to the rod.

	Per Rod	
	Unirradiated	Irradiated
Total U	133.9g	132g
U-235	34.4g	33.6g
w/o	25.7	25.5
Burnup	0	1600 max., 410 avg. MWD/MTU

	Per Assembly (Unirradiated)
U	18.746 kgU
U-235	4.816 kgU-235

3. Each rod is 0.158" O.D. with a 5 mil cladding

   R fuel = 0.1880cm
   R rod = 0.2007cm

   Length of Assembly = 36.62"
   Active fuel length = 30.50"

4. Densities

   The alloy density is 17.3 g/cm^3 with 90 w/o U and 10 w/o Molybdenum

   $N_x = \rho No / A_x \cdot w/o_x$

   $$Nu_{238} = \frac{(17.3)(6.024 \times 10^{23})}{238} \times 0.90 \times (1-0.256) = 2.932 \times 10^{22} \text{ atom/cm}^3$$

   $$U \begin{cases} N_{25} = 1.0218\text{-}2 \text{ atoms/barn-cm} \\ N_{28} = 2.932\text{-}2 \end{cases}$$

   $N_{mo} = 1.087\text{-}2$ ($A_{mo} = 95.9$)

   Also $\sigma_s(Mo) = 6$ barns; for NITAWL, $\sigma_s = \frac{N_{Mo}}{N_{28}}\sigma_s(Mo) = 2.22$ Barns

5. Rod Arrangement

   Assuming a 3" square hole for the asembly, the rods would have a square pitch of 0.635 cm. This equally allocates the water area to a 12 by 12 square lattice. Including the 4 water rod locations (distributing the area equally to each of the 140 rods) yields a slightly larger pitch of 0.644 cm. The rod cell on this case has a radius of 0.3633 cm. This pitch is used for the normal operation analysis, the no-moderator analysis and the boral sensitivity analysis. In the Hypothetical Accident scenario the fuel separates to a pitch of 0.856 cm, the optimum pitch.

Page Added
Oct. 1990

The 0.856 cm optimum pitch is the maximum pitch permitted by the structural tubes containing the fuel, which have a 4.5" I.D. Using the B & W NULIF program, the optimum pitch of the rods is found by computing k_{∞} versus pitch.

Pitch(cm)	k_{∞}	
0.500	1.4736	
0.600	1.5389	
0.644	1.5702	(Maximum Hypothetical Attainable) in 3" can
0.700	1.6069	
0.800	1.6591	
0.856	1.6803	
0.900	1.6932	
1.000	1.7113	
1.100	1.7162	
1.200	1.7102	
1.300	1.6955	

6. Data (from NULIF) for AMPX/KENO

Normal Operation:

$\Sigma_{po} = 0.4879$ $\bar{T} = 0.5753$

$(\sigma_m)_{eff} = 76.34$ $C = 0.3464$

Hypothetical Accident

$\Sigma_{po} = 0.4879$ $\bar{T} = 0.4553$

$(\sigma_m)_{eff} = 92.06$ $C = 0.1741$

"Homogenized" Fuel Densities

Normal Operation:

Nu235	=	2.146-3
Nu238	=	6.157-3
Nmo	=	2.286-3
Nzr	=	1.242-3
N_H	=	5.089-2
No	=	2.545-2

Hypothetical Accident

Nu235	=	1.5484-3
Nu238	=	4.4430-3
Nmo	=	1.6472-3
Nzr	=	8.9465-4
N_H	=	5.5379-2
No	=	2.7690-2

7. KENO Model

The geometry of the KENO Model is illustrated in Figures X-18 and X-19. Four different fuel locations were investigated: a normal operation case (Figure X-20) with the fuel located by the non-structural aluminum tube of the basket, and a hypothetical accident scenario (Figure X-21) in which the tubes vanish and the fuel is free to cluster at the center of the basket. In this scenario, the Boral at the very center of the basket is assumed to disappear because it is not supported by the steel of the basket. An additional calculation was performed for the normal operation geometry in which all moderator was removed from the fuel region. This case is necessary to demonstrate that the fuel is subcritical for the fast spectrum present during dry shipment. This unmoderated case used the cross-sections without the cell-weighing performed by XSDRNPM. The sensitivity of the basket to neutron channeling between boron carbide grains was evaluated by re-performing the normal operation case with 75% of the boron concentration.

Assumptions for Rockwell Basket Geometry (see Figure X-19)

A. Boral Locations:

1. Treat all 4 legs of cruciform the same. The Boral plates extend 6.3" to the outer part of the cruciform legs except on the side with the drain line channel, which extends 4.81" from the center. The Boral has been extended to 6" for conservation.

B. The Total cruciform thickness is:

$$T = \text{Boral plate thickness} + 2t = \underset{(0.1135")}{0.2882\ \text{cm}} + \underset{(0.50")}{1.27\ \text{cm}}$$

$$= 1.5582\ \text{cm}$$

The half width is thus 0.7791 cm.

C. Fuel Locations:

1. Fermi-1: The Fermi fuel is a 2.936" square centered in a 5" OD tube. The center of the fuel square is thus 2.5" (6.35cm) from the surface of the stainless steel cruciform. The tube around the fuel is not part of the license drawings and is treated as water for the criticality analysis, it just centers the fuel in normal operation.

2. EBR II fuel: The fuel is a 4.875" OD can that is free to contact the cruciform walls.

KENO GEOMETRY

Materials

1-Fuel
2-Boral
3-Water
4-SS
5-Al
6-Pb
7-depleted U

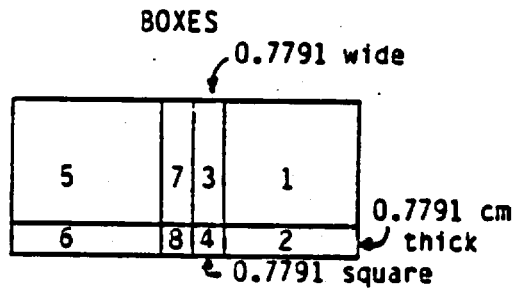

8 Box Types

Box Type 1 — Fermi, Normal Operation (Al Tube Ignored)

CUBOID 1	7.62	0.00	7.62	0.00	1000.-1000. 27*0.5
CUBOID 3	10.16	-2.54	10.16	-2.54	"

5"

Page Added
Oct. 1990

Box Type 2						
CUBOID 2	13.015	0.00	0.1441	0.00	1000.-1000.	27*0.5
CUBOID 4	13.015 (5")	0.00	0.7791	0.00	"	
Box Type 3						
CUBOID 2	0.1441	0.00	13.015	0.00	"	
CUBOID 4	0.7791	0.00	13.015	0.00	"	
Box Type 4						
CUBOID 4	0.00	-0.635	0.00	-0.635	"	
CUBOID 2	0.00	-0.7791	0.00	-0.7791	"	
Box Type 5						
CUBOID 1	7.62	0.00	7.62	0.00	"	
CUBOID 3	10.16	-2.54	10.16	-2.54	"	
Box Type 6						
CUBOID 2	0.00	-13.015	0.1441	0.00	"	
CUBOID 4	0.00	-13.015	0.7791	0.00	"	
Box Type 7						
CUBOID 2	0.00	-0.1441	13.015	0.00	"	
CUBOID 4	0.00	-0.7791	13.015	0.00	"	
Box Type 8						
CUBOID 4	0.635	0.0	0.00	-0.635	"	
CUBOID 2	0.7791	0.0	0.00	-0.7791	"	

8. Computer Results

The computer inputs and outputs are provided in Appendix F. The results for the AMPX/KENO analyses are provided below. The results of the analyses are summarized here along with the results corrected for bias and uncertainties (k_s).

Case	Calculated K_e	k_s
Normal Operation, fuel centered in tubes	0.80637±0.00480	0.827
Hypothetical Accident	0.93662±0.00313 0.93720±0.00397	0.956
Boron Sensitivity: 75% of B-10	0.81949±0.00492	0.841 (Δk_s= 1.7%)
No Moderator	0.65500±0.00477	0.676

$$k_s = k_{calculated} + \underset{\text{(bias)}}{0.00981} + \underset{\text{(experimental uncertainty)}}{0.001711} + \underset{\text{(calculation uncertainty)}}{(1.645\sigma^2} + \underset{\text{(Uncertainty of benchmark calcs)}}{0.00722^2)^{1/2}}$$

Page Added
Oct. 1990

FIGURE X-18

NLI 1/2 KENO MODEL (FERMI-1 FUEL SHOWN)

FIGURE WITHHELD UNDER 10 CFR 2.390

Page Added
Oct. 1990

FIGURE X-19

KENO GEOMETRY

FIGURE WITHHELD UNDER 10 CFR 2.390

Page Added
Oct.,1990

FIGURE X-20

FERNI-I
NORMAL OPERATION

FIGURE WITHHELD UNDER 10 CFR 2.390

FIGURE X-21

FERHI-I
HYPOTHETICAL ACCIDENT

FIGURE WITHHELD UNDER 10 CFR 2.390

Page Added
,.Oct. 1990

EBRII FUEL PARAMETERS

1. Fuel consists of a circular canister containing 41 rods. The arrangement of these rods is random so the optimum spacing is determined (via the NULIF program) and the can is treated as if it contained fuel all of which is at the optimum spacing. The can itself is not considered in the criticality analysis except to define the boundary of the fuel.

2. The fuel slugs are of depleted Uranium plus Plutonium. The canister contains 3.876 kg Pu and 287.9 kgU (0.21% U-235). The fuel density is 19.3 g/cm^3. All Pu is treated as Pu-239, given its fissile nature.

3. Rod Dimensions

   R_{fuel} = 0.5499 cm

   R_{rod} = 0.79375 cm Aluminum clad

   Active Fuel Length = 156.8 inches

4. Densities

   The alloy is 0.01328 w/o Pu in Uranium.

   $N_U = 19.3 \times \frac{No}{238} (1-0.01328) = 4.820\text{-}2$ atoms/barn-cm

   N_{28} = 4.810-2

   N_{25} = 1.025-4

   N_{pu} = 6.460-4

   For NITAWL, the U-238 is treated without a scattering nuclide present. The Pu-239 is affected by the U-238 (even though the energy transfer for a neutron colliding with U-238 is small), so the σ_s for the Pu-239 resonance calculation is:

   σ_s (U-238) = 12 barns; σ_s = 893.5 barns per Pu atom.

5. The optimum pitch is determined by the NULIF program:

Pitch (cm)	k_∞
1.805	1.2504
1.918	1.3061
2.031	1.3385
2.144	1.3548
2.200	1.3583
2.257	1.3595
2.400	1.3535
2.600	1.3293
2.800	1.2928
3.000	1.2485
3.200	1.1991

Optimum C = 0.07323 for NITAWL
$(\sigma_m)_{eff}$ = 28.09 for U_{238}
$(\sigma_m)_{eff}$ = 2091.6 for Pu_{239}

Page Added
Oct. 1990

6. "Homogenized" Fuel Densities

N_{28}	=	8.9701-3	atom / barn-cm
N_{25}	=	1.9115-5	
N_{49}	=	1.2047-4	Pu-239
N_{Al}	=	1.2180-2	
N_H	=	4.0927-2	
N_O	=	2.0463-2	

7. KENO Models

The cask and basket models used to analyze the Fermi-1 fuel were used to analyze the EBRII fuel. A normal operation case and hypothetical accident case that assumes that the fuel clusters in the center of the basket were analyzed.

8. Computer Results

The input and results for the AMPX/KENO calculations are provided below. The results of the analyses are summarized here along with the results corrected for bias and uncertainties (k_s).

Case	k calculated	k_s
Normal Operation, (See Figure X-22)	0.68167±0.00378	0.702
Hypothetical Accident, fuel clustered in center of basket (See Figure X-23)	0.67571±0.00385	0.696

FIGURE X-22

EBR-II
NORMAL OPERATION

FIGURE WITHHELD UNDER 10 CFR 2.390

.Page Added
Oct. **1990**

FIGURE X-23

EBR-II
HYPOTHETICAL ACCIDENT

FIGURE WITHHELD UNDER 10 CFR 2.390

Page Added
Oct. 1990

11.0 REFERENCES

1. Barry, R.F., "LEOPARD - A Spectrum Dependent Non-Spatial Depletion Code for the IBM-7094", WCAP-3269-26, Sept. 1963.

2. Joanou, G.D., and Dudek, J.S., "GAM-II, A B3 Code for the Calculation of Fast Neutron Spectra and Associated Multi-group Constants", GA-4265, Sept. 1963.

3. Hokeck, H., "THERMOS, A Thermalization Transport Theory Code for Reactor Lattice Calculations", BNL-5862, 1961.

4. Nordheim, L.W., "A Program of Research and Calculation of Resonance Absorption", GA-2527, August 1961.

5. Engle, W.W., Jr., and Mynott, F.R., "ANISN, A One-Dimensional Discrete Ordinates Transport Code with Anisotropic Scattering", (to be published).

6. Engle, W.W., Jr., "A User's Manual for ANISN: A One-Dimensional Discrete Ordinates Transport Code with Anisotropic Scattering," K-1693, Union Carbide Corp., March 1967.

7. Carlson Sn Discrete Ordinate Angular Quadrature", Fast Reactor Design Analysis Codes, URCL-50429, July 1968.

8. Paxton, H.C., "Critical Dimensions of Systems Containing U-235, Pu-239, and U-233", TID-7028, June 1964.

Page Added
Oct. 1990

REFERENCES (continued)

9. Easter, M.E., Prim, R.T., "Validation of the SCALE Code System and Two Cross-Section Libraries for Plutonium Benchmark Experiments", ORNL/TM-9402.

10. Knight, J.R., "Validation of the Monte Carlo Criticality Program, KENO V.a for Highly-Enriched Uranium Systems.

11. Harry E. Hootman Letter, Westinghouse Savannah River Co., to John Thompson, Nuclear Assurance Corporation, "Technical Data on Mark 22 Fuel Assemblies to be Certified in the NLI-1/2 Shipping Cask," October 7, 1989.

This page intentionally left blank.

APPENDIX A

SECTION X

Additional Criticality Analysis

This page intentionally left blank.

APPENDIX A

TABLE OF CONTENTS

		Page
1.0	INTRODUCTION	X-A1
2.0	SUMMARY AND CONCLUSIONS	X-A1
3.0	METHODS OF ANALYSIS	X-A2
	3.1 The KENO Code	X-A2
	3.2 Cross Sections	X-A3
	3.2.1 Resonance Region	X-A3
	3.2.2 Thermal Region	X-A5
	3.3 The LEOPARD Code	X-A6
4.0	BENCHMARK PROBLEM	X-A6
	4.1 Yankee Critical Assembly	X-A7
	4.2 Input Informations	X-A10
	4.3 Results	X-A16
5.0	CASK ANALYSIS	X-A17
	5.1 Input Information	X-A17
	5.1.1 KENO Analysis	X-A17
	5.1.2 ANISN Analyses	X-A21
	5.2 Results	X-A21
	5.2.1 Single Isolated Undamaged Cask	X-A21
	5.2.2 An Infinite Array of Undamaged Casks	X-A23
	5.2.3 Single Damaged Cask	X-A23
6.0	DISCUSSION OF RESULTS	X-A26
7.0	REFERENCES	X-A28

LIST OF TABLES

		Page
1.	The 16 Energy Groups	X-A4
2.	Nuclides and Atom Densities Used in Yankee Critical KENO Calculations	X-A14
3.	Yankee Critical KENO Results	X-A15
4.	Geometry Input in KENO for NLI PWR Cask	X-A19
5.	KENO Cask Atom Densities	X-A20
6.	Atom Density of Nuclides Used in ANISN Calculations	X-A22
7.	KENO k_{eff} of NLI 1 PWR Cask	X-A24
8.	k_{eff} of an Isolated PWR Cask Versus Thickness of Water Reflector	X-A25
9.	Summary of Results of Criticality Analysis NLI 1/2 Cask 1 PWR Loading	X-A27

LIST OF FIGURES

1.	Loading Diagram Yankee Critical Experiment 3.9:1 Code	X-A8
2.	Yankee Critical Assembly Core Plate Matrix	X-A9
3.	KENO Geometry Description of the Yankee Critical Assembly	X-A11
4.	KENO Geometry for Control Rods - Yankee Critical Experiment	X-A12
5.	KENO Model - 1 PWR Loading	X-A18

1.0 INTRODUCTION

This report provides additional information confirming the validity of the criticality analysis of the NLI 1/2 Shipping Cask. Specifically provided are the details of an analysis of a critical experiment and of the cask with the code KENO[1], comparison of the results with those obtained with the code ANISN[2] and the actual number densities of the fuel region for both the 1 PWR and 2 BWR cask loadings.

2.0 SUMMARY AND CONCLUSIONS

The KENO Monte Carlo criticality code with the Hansen and Roach[3] cross sections has been used to calculate the reactivity of a Yankee critical experiment and of the NLI 1/2 cask with the 1 PWR fuel loading described in the NLI 1/2 SAR.[4] The results of these analyses yield a 95% confidence level k_{eff} of 0.929 ± .014 for a single isolated cask with water in the can, in the can to cask gap and in the shield jacket. Note that the can in the cask was conservatively assumed to be filled with water even though the cask and can are designed so that even under hypothetical accident conditions, no water would enter the can. The above value includes a correction for the difference between the KENO results for the critical experiment and the measured value. The standard deviation of each KENO run was approximately 0.005. The above result compares favorably with the equivalent ANISN result of 0.944.

Additional analyses were performed to show that for a large array of undamaged casks (but with can filled with water) there is no essential change in reactivity. Analyses were also performed to show that the reactivity of a single cask is insensitive to the amount of external water moderation. The maximum reactivity for a single cask under accident

conditions is essentially the same as that for normal conditions or 0.929 ± .014.

From the above and the results for the BWR loading presented in the SAR, it is concluded that the NLI 1/2 shipping cask meets the criticality requirements of 10 CFR 71.33 thru 71.37 and 71.40 for Fissile Class III. shipments.

3.0 METHODS OF ANALYSIS

3.1 The KENO Code

KENO is a multigroup Monte Carlo program for calculating the criticality of a nuclear system. The code treats the neutron motion in the system using a statistics method. In this method, the life histories of a large number of neutrons as specified in the input are followed as they travel from one point to another in the system.

The neutron scattering as treated in KENO assumes that the differential scattering cross section can be represented by the P1 Legendre polynominal. Absorption of neutrons is not allowed. Instead, the weight of a neutron at each collision point is reduced by the absorption probability. If the region in which the collision occurs contains fissile material, a fission weight is generated. Tracking of a neutron is continued until the neutron leaks from the system or until its weight is reduced below a specified value for the region in which the collision occurred. At that time, Russian roulette is played to determine if the neutron survives or is killed. Information based on collision of these neutrons with the materials in the system is used to determine the criticality condition of the system.

The output from KENO consists of the effective multiplication factor of the system plus an estimate of its standard deviation. In addition, the groupwise and the regionwise information on leakage, absorption and fission are included in the output.

3.2 Cross Sections

The KENO calculation was performed using the sixteen group Knight-modified Hansen and Roach cross sections.[5] The neutron energy group structure for this set of cross sections is given in Table 1.

The Hansen and Roach cross sections were compiled for fast and intermediate neutron critical assemblies. For a well moderated, hydrogeneous system containing slightly enriched uranium fuel pins such as the one in our case, some adjustments of the cross sections are required in the thermal and resonance energy regions.

3.2.1 Resonance Region

The proper resonance absorber cross sections were chosen from the Knight-modified Hansen and Roach data on the basis of a potential scattering cross section value (σp^*), which includes an "escape" cross section derived from an equivalence relation as discussed in Reference 6. The potential scattering cross section is given by:

$$\sigma p^* = \frac{\Sigma_p + \Sigma_e^*}{N_o} \qquad (1)$$

where Σ_p is the homogeneous potential scattering for the pellet composition, N_o is the atom density of the resonance absorber, and

$$\Sigma_e^* = \Sigma_e \cdot \frac{a(1-c)}{1+(a-1)\,c} \qquad (2)$$

TABLE 1

THE 16 ENERGY GROUPS

Group Number	Group lower energy limit, eV
1	3.0×10^6
2	1.4×10^6
3	9.0×10^5
4	4.0×10^5
5	1.0×10^5
6	1.7×10^4
7	3.0×10^3
8	5.5×10^2
9	1.0×10^2
10	3.0×10^1
11	1.0×10^1
12	3.0
13	1.0
14	0.4
15	0.1
16	0

where

$$\Sigma_e = \frac{S_o}{4V_o} \tag{3}$$

$$c = 1 - \gamma_3 - \gamma_3^4 (1 - \gamma_3) \tag{4}$$

$$\gamma_3 = \frac{\Sigma_1}{\Sigma_1 + \Sigma_{e_1}} \tag{5}$$

and

$$\Sigma_{e_1} = \frac{S_o}{4V_1} \tag{6}$$

In equation 3, 5, and 6, Σ_1 is the total cross section of the outer region (homogenized clad-coolant), and S_o, V_o, and V_1 are respectively the pellet surface, pellet volume and volume of the outer region. Equation 4 is a modified Bell approximation [7] for the Dancoff factor suggested by Hummel [3]. Reference 6 suggested 1.35 as a typical value for "a" in equation 2.

3.2.2 Thermal Region

The fuel pin cells were represented in the KENO geometry as a homogenized mixture of pellet, clad and moderator. The thermal neutron flux in a heterogeneous fuel pin cell is depressed in the absorbing fuel and peaks in the moderator region. To account for this variation across a fuel pin cell, thermal cross sections must be adjusted by thermal disadvantage factors before these cross sections can be accepted for homogeneous calculations. The thermal disadvantage factors for the fuel pin cells were evaluated using the THERMOS [9] code. THERMOS solves the one-dimensional multigroup integral transport equation with isotropic scattering. The code computes the scalar thermal neutron flux as a function of position in a lattice. The cell average flux and regionwise

average flux are edited and included in the output.

3.3 The LEOPARD Code

The LEOPARD[10] Code was described in the SAR, Amendment 1, pages X-3, X-5 and X-11. As indicated, LEOPARD was used in the cask analysis only to determine the effect of varying the fuel pin pitch and the water temperature in order to select the most reactive water to fuel ratio for the fuel region. Nearly all the cross sections compiled in the code are from MUFT and SOFOCATE libraries. The code has been tested by Westinghouse against 49 UO_2 critical experiments and 20 uranium metal exponential lattices. The enrichment varied from approximately 1.3 to 4.0%, the W/U ratio varied from approximately 2 to 10; boron concentrations in the moderator were from zero to 3500 ppm and light water to 76% D_2O served as moderator. Bare, steel and aluminum clad fuel were studied as well as both square and hexagonal lattice arrays. A comparison of experimental and calculated results is reported in Reference 11. The calculations for 49 UO_2 cases result in a mean $k_{eff} = 0.9907 \pm .0092$. If cases containing D_2O in the moderator are excluded, then $k_{eff} = 0.9933 \pm .0071$ for 41 UO_2 cases. For the 10 experiments, performed by Westinghouse, which have the most complete physical parameters of the experimental assembly the mean k_{eff} is $0.9964 \pm .0032$. A bias factor of 0.36% was built into the code. Use of the code was later extended to Zircaloy cores. Good agreement of calculated and measured values was also reported.[12]

4.0 BENCHMARK PROBLEM

A benchmark problem is included in this report to demonstrate the validity of the method and the neutron cross section data which were

used in the criticality analysis of the cask. The benchmark calculation was performed using the KENO and PICTURE[13] codes, and the Hansen and Roach cross section processed as described in the previous section. One of the Yankee critical experiments [14] was chosen as a benchmark problem for its similarity in the type of fuel and the water-to-uranium ratio as compared with the design basis fuel used in the cask calculations.

4.1 Yankee Critical Assembly

The Yankee critical assembly was mounted in a stainless steel tank 6 ft in diameter and 7 ft high with a 4 ft bottom extension to accommodate the follower sections of the control rods. The fuel rods used in the core were slightly enriched UO_2 (2.7 w/o) pellets, clad in AISI-304 stainless steel and with a UO_2 density of 10.2 gm/cc. The pellet diameter was 0.3000 inch. The inside diameter of the stainless steel tubing was 0.3062 inch with a wall thickness of 0.0161 inch. The active fuel length was 48 inches. The pitch of fuel rods was 0.470 inch which corresponds to a water-to-uranium volume ratio of 3.87:1 at room temperature.

The fuel rods were not grouped into bundles, but uniformly loaded in the core. Figure 1 shows the fuel loading diagram for the case chosen for this calculation. Only the outer ring of rods is shown, the center of the loading diagram being filled with fuel rods. There were 4468 fuel rods, plus 289 additional unit cells occupied by control rods. Control of the core reactivity was provided by nine silver-cadmium control rods (69.83% Ag, 30.15% Cd and 0.02% Zn) located in the core as shown in Figure 2. The control rods had a span of 7.812 inches and a blade thickness of 0.285. The poisoned portion of the control rod was 48 inches long with 53 inches of aluminum follower below the active section.

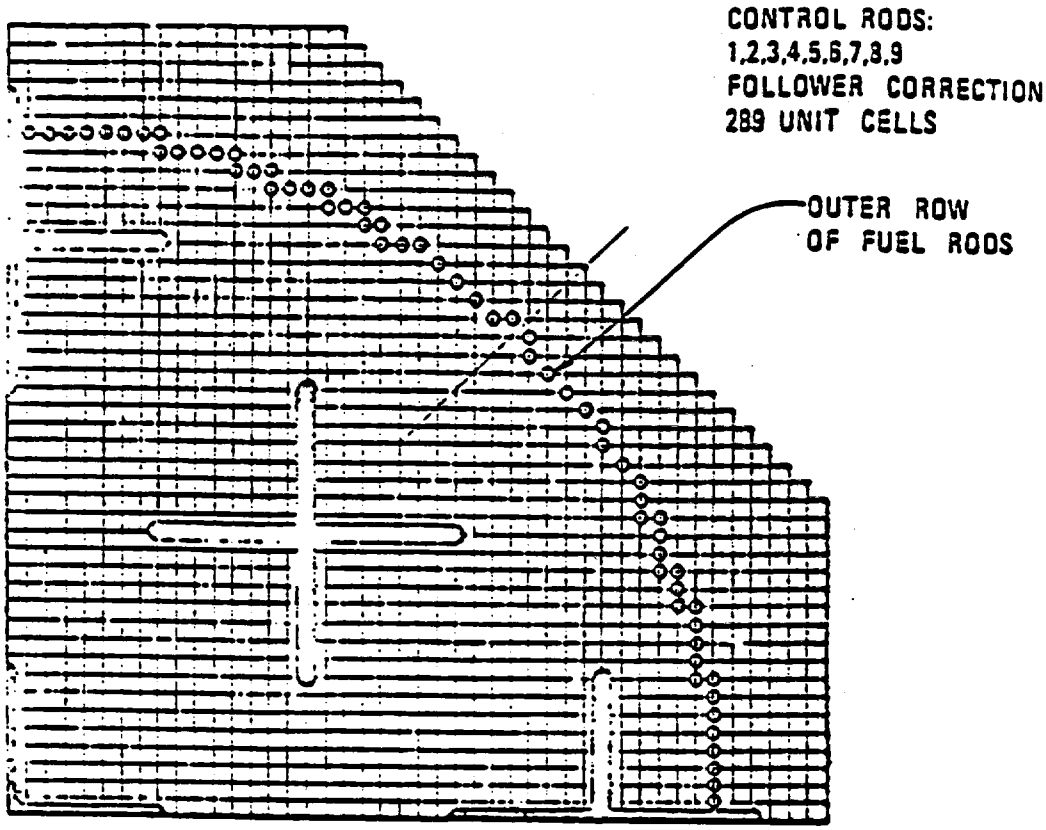

FIGURE 1

LOADING DIAGRAM YANKEE CRITICAL EXPERIMENT 3.9:1 CORE

FIGURE WITHHELD UNDER 10 CFR 2.390

FIGURE 2
YANKEE CRITICAL ASSEMBLY CORE PLATE MATRIX.

The rods were banked at 10.38 inches (or 26.37 cm) from bottom of the fuel.

Light water served both as moderator and reflector. The experiment was conducted with water maintained at or near the room temperature. Boric acid dissolved in water provided an alternate control of the core during the process of measuring the reactivity worth of the control rods. The boron concentration in this case was measured at 12.5 ppm of water as reported on page 82 of Reference 14.

4.2 Input Informations

The geometry which represents the Yankee critical experiment as used in the KENO calculation is shown in Figures 3 and 4. The fuel region was treated as a homogeneous mixture of UO_2, clad and moderator. The equivalent diameter of the core is 92.91 cm. Control rods and water slots adjacent to control rods were explicitly represented as shown in Figure 4 and were located as shown in Figure 2. Because of complexity of this geometry, the core was described using a special subroutine built in the code and known as the generalized geometry package (GEOM). The generalized geometry allows any system which can be described by a combination of planes and/or quadric surfaces, arbitrarily oriented and intersecting in any arbitrary fashion. The geometry input cards were checked out with the use of the PICTURE code prior to use in the KENO problem.

There were altogether five material mixtures in the KENO problem, namely:

Mixture	Description
1	fuel
2	water slots
3	follower

FIGURE WITHHELD UNDER 10 CFR 2.390

FIG. 3 KENO GEOMETRY DESCRIPTION OF THE YANKEE CRITICAL ASSEMBLY

FIGURE WITHHELD UNDER 10 CFR 2.390

FIGURE 4
KENO GEOMETRY FOR CONTROL RODS
YANKEE CRITICAL EXPERIMENT

Revised
Oct. -1990

Mixture	Description
4	control rod
5	reflector

Table 2 presents the nuclides and atom densities in each mixture. The mixture No. 1 corresponds to medium 1 in GEOM, mixture No. 2 to medium 2, and so on.

Neutron cross sections for U-235 and U-238 were selected from the Hansen and Roach library on basis of the potential scattering cross section of a heterogeneous fuel pin cell. Following the procedures described in Section 3.2, σp^* for the Yankee fuel is 75.6 and 2690 barns for U-238 and U-235 respectively.

Thermal disadvantage factors for the Yankee fuel pin cell obtained from THERMOS are as follows:

	Group 15	Group 16
Pellet	0.931	0.876
Clad	0.979	0.957
Moderator	1.040	1.073

The appropriate group 15 and 16 fuel region Hansen and Roach cross sections were multiplied by these factors for input into KENO.

Since silver is not included in the Hansen and Roach library, cross sections of silver were generated from GAM-II and THERMOS. (See the NLI 1/2 SAR) These cross sections were weighted over the fuel spectrum.

TABLE 2

NUCLIDES AND ATOM DENSITIES USED IN YANKEE CRITICAL KENO CALCULATIONS

YANKEE CRITICAL EXPERIMENT E=.027, W/U=3.07, RODS 26.37CM FROM BOTTOM, 1

MIXTURE	NUCLIDE	DENSITY	
1	1	3.95720E-02	hydrogen
1	2	8.11725E-07	boron
1	3	1.97860E-02	oxygen in moderator
1	4	1.23481E-05	chromium
1	5	1.29540E-06	manganese
1	6	4.45976E-03	iron
1	7	4.17404E-06	nickel
1	8	1.36741E-06	U-235
1	9	7.07941E-03	U-238
1	10	1.45571E-02	oxygen in UO_2
2	1102	6.57465E-02	hydrogen
2	5100	4.94426E-07	boron
2	8100	3.33710E-02	oxygen in water
3	13100	5.98087E-02	aluminum
4	11	3.97566E-02	silver
4	30100	1.87910E-05	zinc
4	48100	1.64740E-02	cadmium
5	1102	6.67460E-02	hydrogen
5	5100	6.94426E-07	boron
5	8100	3.33710E-02	oxygen in water

ALTHOUGH A FISSION SPECTRUM MAY HAVE BEEN ASSOCIATED WITH ONE OR MORE INPUT NUCLIDES, A FISSION SPECTRUM WILL BE READ FROM CARDS BECAUSE ALL NUCLIDE IDS ARE POSITIVE

Revised
Oct. 1990

TABLE 3

YANKEE CRITICAL KENO RESULTS

YANKEE CRITICAL EXPERIMENT E=.027, X/U=1.07, RODS 26.37CM FROM BOTTOM, 1

NO. OF INITIAL GENERATIONS SKIPPED	AVERAGE K-EFFECTIVE	DEVIATION	67 PER CENT CONFIDENCE INTERVAL	95 PER CENT CONFIDENCE INTERVAL	99 PER CENT CONFIDENCE INTERVAL	NUMBER OF HISTORIES
3	0.96904	+ OR - 0.00541	0.96364 TO 0.97445	0.95823 TO 0.97986	0.95282 TO 0.98526	17100
4	0.96974	+ OR - 0.00546	0.96429 TO 0.97520	0.95883 TO 0.98066	0.95337 TO 0.98612	16800
5	0.97056	+ OR - 0.00549	0.96507 TO 0.97606	0.95957 TO 0.98155	0.95408 TO 0.98705	16500
6	0.97181	+ OR - 0.00553	0.96628 TO 0.97734	0.96075 TO 0.98287	0.95522 TO 0.98840	16200
7	0.97143	+ OR - 0.00562	0.96581 TO 0.97705	0.96020 TO 0.98307	0.95458 TO 0.98869	15900
8	0.97209	+ OR - 0.00572	0.96637 TO 0.97781	0.96064 TO 0.98353	0.95492 TO 0.98926	15600
9	0.97367	+ OR - 0.00561	0.96806 TO 0.97928	0.96245 TO 0.98489	0.95684 TO 0.99050	15300
10	0.97557	+ OR - 0.00538	0.97019 TO 0.98096	0.96481 TO 0.98634	0.95943 TO 0.99172	15000
11	0.97702	+ OR - 0.00529	0.97173 TO 0.98231	0.96644 TO 0.98760	0.96110 TO 0.99294	14700
12	0.97768	+ OR - 0.00517	0.97250 TO 0.98286	0.96731 TO 0.98804	0.96214 TO 0.99322	14400
17	0.98033	+ OR - 0.00565	0.97468 TO 0.98598	0.96902 TO 0.99163	0.96337 TO 0.99728	12900
22	0.97995	+ OR - 0.00630	0.97366 TO 0.98626	0.96736 TO 0.99256	0.96107 TO 0.99886	11400
27	0.98225	+ OR - 0.00674	0.97551 TO 0.98899	0.96877 TO 0.99572	0.96204 TO 1.00245	9900
32	0.98566	+ OR - 0.00761	0.97805 TO 0.99326	0.97144 TO 1.00187	0.96388 TO 1.00947	8400
37	0.98585	+ OR - 0.00716	0.98960 TO 1.00401	0.98252 TO 1.01117	0.97535 TO 1.01836	6900
42	0.99342	+ OR - 0.00660	0.98682 TO 0.99702	0.97723 TO 1.00962	0.97063 TO 1.01622	5400
47	0.99116	+ OR - 0.00866	0.98250 TO 0.99982	0.97383 TO 1.00848	0.96517 TO 1.01715	3900
52	0.99132	+ OR - 0.01239	0.97893 TO 1.00371	0.96654 TO 1.01610	0.95415 TO 1.02848	2400
57	0.99265	+ OR - 0.03208	0.96060 TO 1.02476	0.92853 TO 1.05678	0.89645 TO 1.08492	900

4.3 Results

The effective neutron multiplication factor obtained from this KENO calculation is 0.977 ± 0.011 at 95% confidence level. Detailed KENO output is presented in Table 3. The above result yields a bias factor of 0.023 as compared with unity in the critical experiment.

Similar experiment-theory discrepancies, where Monte Carlo calculations with Hansen and Roach cross sections were used, have been reported by Dickinson[15] and Carter[16]. Monte Carlo calculations with ENDF/B-II and ENDF/B-III cross sections also result in discrepancy as reported by Bierman and Clayton.[17]

After reviewing a large number and variety of comparisons between critical experiment data and the corresponding calculated results, Crume[18] concluded with the following comments:

> "For our purposes, neutron multiplication factor values of 0.98 from ANISN and DOT calculations and 0.97 from KENO calculations using Hansen-Roach cross sections are considered to correspond to actual criticality for systems containing highly enriched uranium. The corresponding values for low enriched systems may have to be taken somewhat smaller.
>
> It should be pointed out that differences from unity such as these are usually quite acceptable for criticality safety purposes whereas they might not be nearly so acceptable for purposes of reactor design. This acceptability occurs for the following reason. If a system is analyzed using extrapolations of experimental criticality data or less sophisticated calculational techniques than those just discussed it may be necessary to use considerable conservatism in applying the results of the analysis. Often, the amount of conservatism required will be so great as to be equivalent to taking a much smaller value for the critical multiplication factor than the 0.98 or 0.97 indicated above".

In light of the above discussions, a computation bias factor of +0.023 was established and later was introduced into the criticality calculation of the cask (Section 5.2).

5.0 CASK ANALYSIS

The methods of analysis as described in Section 3.0 were followed in determining the neutron multiplication factor of the cask using KENO. Additional ANISN analyses were also performed using the methods described in the SAR.

5.1 Input Information

5.1.1 KENO Analysis

Figure 5 shows the 1 PWR cask as modeled in KENO. The actual geometry input for KENO is presented in Table 4. There are altogether six mixtures representing explicitly the following regions:

Mixture	Description
1	Homogenized fuel with the most reactive water/fuel ratio
2	Depleted uranium
3	95% aluminum and 5% water
4	Stainless steel
5	Lead
6	Water

A reflection boundary was imposed at the top and bottom of the fuel and, therefore, any neutron leakage in the axial direction was neglected.

The atom density of nuclides appearing in various mixtures are given in Table 5. The depleted uranium is present in the cask to serve as one of the shielding materials. The U-235 content of the depleted uranium was taken as 0.22%

FIGURE WITHHELD UNDER 10 CFR 2.390

FIGURE 5

MODEL - I PWVR LOADING

RevisedKENO
Retv190sed1

TABLE 4

GEOMETRY INPUT IN KENO FOR NLI PWR CASK

```
WIC PWR E=3.35, ACCIDENT PITCH .5949 INCH, 100F
GEOMETRY DESCRIPTION
   CUBOID      1      +X = 1.1277E+01   -X =-1.1277E+01   +Y = 1.1277E+01   -Y =-1.1277E+01   +Z = 1.8288E+02   -Z =-1.8288E+0
   CYLINDER    3  RADIUS = 1.6034E+01   +Z = 1.8288E+02   -Z =-1.8288E+02
   CYLINDER    4  RADIUS = 1.6669E+01   +Z = 1.8288E+02   -Z =-1.8288E+02
   CYLINDER    6  RADIUS = 1.6986E+01   +Z = 1.8288E+02   -Z =-1.8288E+02
   CYLINDER    4  RADIUS = 1.8256E+01   +Z = 1.8288E+02   -Z =-1.8288E+02
   CYLINDER    6  RADIUS = 1.8328E+01   +Z = 1.8288E+02   -Z =-1.8288E+02
   CYLINDER    2  RADIUS = 2.5309E+01   +Z = 1.8288E+02   -Z =-1.8288E+02
   CYLINDER    5  RADIUS = 3.0706E+01   +Z = 1.8288E+02   -Z =-1.8288E+02
   CYLINDER    4  RADIUS = 3.2929E+01   +Z = 1.8288E+02   -Z =-1.8288E+02
   CYLINDER    6  RADIUS = 4.0000E+01   +Z = 1.8288E+02   -Z =-1.8288E+02
   CYLINDER    6  RADIUS = 4.5629E+01   +Z = 1.8288E+02   -Z =-1.8288E+02
   CYLINDER    4  RADIUS = 4.6264E+01   +Z = 1.8288E+02   -Z =-1.8288E+02
   CUBOID      0      +X = 4.6264E+01   -X =-4.6264E+01   +Y = 4.6264E+01   -Y =-4.6264E+01   +Z = 1.8288E+02   -Z =-1.8288E+0
```

TABLE 5

KENO CASK ATOM DENSITIES

WTC PWR E=3.35, ACCIDENT PITCH .5949 INCH, 100F

MIXTURE	NUCLIDE	DENSITY	
1	1	3.66848E-02	H in moderator
1	2	1.83424E-02	O in moderator
1	3	1.40800E-04	Ni in moderator
1	4	3.39611E-03	Zr
1	5	2.10432E-04	U-235
1	6	5.99462E-03	U-238
1	7	1.24101E-02	O in UO_2
1	8	5.05936E-03	H in non-lattice
1	9	2.52968E-03	O in non-lattice
1	10	2.68358E-05	Fe in non-lattice
1	11	2.40760E-05	Ni in non-lattice
1	12	7.43157E-06	Cr in non-lattice
1	13	7.62270E-07	Mn in non-lattice
1	14	3.10051E-04	Zr in non-lattice
2	92501	1.05240E-04	U-235
2	92801	4.77250E-02	U-238
3	1102	3.32120E-03	H
3	8100	1.66060E-03	O
3	13100	5.68100E-02	Al
4	24100	1.67433E-02	Cr
4	25100	1.76140E-03	Mn
4	26100	6.04160E-02	Fe
4	28100	8.36665E-03	Ni
5	82100	3.30000E-02	Pb
6	1102	6.64239E-02	H
6	8100	3.32119E-02	O

ALTHOUGH A FISSION SPECTRUM MAY HAVE BEEN ASSOCIATED WITH ONE OR MORE INPUT NUCLIDES, A FISSION SPECTRUM WILL BE READ FROM CARDS BECAUSE ALL NUCLIDE IDS ARE POSITIVE

The potential scattering cross sections for U-235 and U-238 in the most reactive fuel pin cell were found to be 1990 and 69.8 barns respectively for the PWR fuel. Based on these potential scattering cross sections, a proper set of cross sections was chosen for U-235 and U-238 from the Hansen and Roach library. The thermal disadvantage factors for the fuel pin cell determined from THERMOS are:

	Group 15	Group 16
Pellet	0.888	0.837
Clad	0.982	0.962
Moderator	1.058	1.086

These were applied to the thermal cross sections for nuclides appearing in the fuel region. For nuclides which appear in regions other than the homogenized fuel, cross sections were taken directly from the Hansen and Roach library. Infinite dilution cross sections were chosen for U-235 and U-238 in the region of depleted uranium.

5.1.2 ANISN Analyses

To examine the expected small effect of cask boundary conditions and external reflector thickness several ANISN problems were run. These were run using the methods described in the SAR. The atom densities used in the analyses are given in Table 6.

5.2 Results

5.2.1 Single Isolated Undamaged Cask

This calculation was for the cask filled with 100°F water, the neutron shield jacket filled with water, and no neutrons returning from outside

TABLE 6

ATOM DENSITY OF NUCLIDES USED IN ANISN CALCULATIONS
(atoms/barn - cm)

PWR fuel:

H	0.041985
O	0.033413
SS	0.000039150
Ni	0.00016112
Zr	0.0037078
U-235	0.00021061
U-238	0.0059996

BWR fuel:

H	0.040761
O	0.034404
SS	0.00032531
Zr	0.0035599
U-235	0.00018811
U-238	0.0068234

95% Al Plus 5% Water:

H	0.0033212
O	0.0016606
Al	0.05681

Stainless Steel

SS	0.08807

Depleted Uranium

U-235	0.00010523
U-238	0.047725

Lead

Pb	0.0330

Water

H	0.06622
O	0.03311

Revised
Oct. 1990

of the shield jacket. Table 7 presents the KENO output. At a 95% confidence level the effective neutron multiplication factor is 0.906 ± .008. To this a computation bias factor of 0.023 ± 0.011 which was established in Section 4.3 from a direct comparison of experiment and calculated k_{eff} values should be applied. Thus the corrected effective multiplication factor of the PWR cask is 0.929 ± .014 at 95% confidence level. The uncertainty is the combined value for the two (critical experiment and cask) KENO analyses.

5.2.2 An Infinite Array of Undamaged Casks

To conservatively determine the reactivity of two adjacent casks, an ANISN problem similar to those described in the NLI 1/2 SAR was run with full reflection at the outer edge of the filled neutron shield jacket. The result is 0.944 which is the same as that for a single isolated cask with the shield jacket full of water. The ANISN result shows that the above KENO result for a single cask is also applicable to an infinite array of undamaged casks.

5.2.3 Single Damaged Cask

The only effect of the hypothetical accident conditions on the cask as far as criticality is concerned is the potential loss of the external neutron shield water. The effect of varying the amount of water external to the cask shell has been examined with a series of ANISN calculations assuming the can is filled with water and zero neutron return at the outer surface of several different thicknesses of water surrounding the cask. The results of the analyses are given in Table 8.

TABLE 7

KENO k_{eff} OF NLI 1 PWR CASK

WTC PWR E=3.39, ACCIDENT PITCH .5949 INCH, 100F

NO. OF INITIAL GENERATIONS SKIPPED	AVERAGE K-EFFECTIVE	DEVIATION	67 PER CENT CONFIDENCE INTERVAL	95 PER CENT CONFIDENCE INTERVAL	99 PER CENT CONFIDENCE INTERVAL	NUMBER OF HISTORIES
3	0.90613	+ OR - 0.00398	0.90215 TO 0.91011	0.89817 TO 0.91409	0.89419 TO 0.91807	24100
4	0.90655	+ OR - 0.00402	0.90253 TO 0.91057	0.89851 TO 0.91458	0.89449 TO 0.91860	19600
5	0.90615	+ OR - 0.00406	0.90209 TO 0.91021	0.89803 TO 0.91427	0.89397 TO 0.91834	19500
6	0.90639	+ OR - 0.00412	0.90227 TO 0.91051	0.89815 TO 0.91463	0.89404 TO 0.91874	19200
7	0.90629	+ OR - 0.00418	0.90211 TO 0.91047	0.89793 TO 0.91466	0.89374 TO 0.91884	18900
8	0.90607	+ OR - 0.00424	0.90183 TO 0.91032	0.89758 TO 0.91456	0.89334 TO 0.91881	18500
9	0.90554	+ OR - 0.00429	0.90225 TO 0.91083	0.89797 TO 0.91512	0.89368 TO 0.91941	18300
10	0.90404	+ OR - 0.00433	0.90171 TO 0.91037	0.89738 TO 0.91471	0.89305 TO 0.91904	18000
11	0.90704	+ OR - 0.00429	0.90275 TO 0.91132	0.89846 TO 0.91561	0.89417 TO 0.91990	17700
12	0.90612	+ OR - 0.00426	0.90186 TO 0.91038	0.89760 TO 0.91465	0.89333 TO 0.91891	17400
17	0.90336	+ OR - 0.00437	0.89900 TO 0.90773	0.89463 TO 0.91210	0.89026 TO 0.91647	15900
22	0.90310	+ OR - 0.00469	0.89845 TO 0.90782	0.89376 TO 0.91251	0.88907 TO 0.91730	14400
27	0.90304	+ OR - 0.00504	0.89800 TO 0.90808	0.89295 TO 0.91312	0.88791 TO 0.91816	12900
32	0.90592	+ OR - 0.00531	0.90061 TO 0.91123	0.89530 TO 0.91654	0.88999 TO 0.92185	11400
37	0.90998	+ OR - 0.00521	0.90477 TO 0.91519	0.89956 TO 0.92039	0.89436 TO 0.92560	9900
42	0.91145	+ OR - 0.00570	0.90575 TO 0.91715	0.90005 TO 0.92285	0.89435 TO 0.92855	8400
47	0.91131	+ OR - 0.00602	0.90530 TO 0.91733	0.89928 TO 0.92335	0.89326 TO 0.92937	6900
52	0.90697	+ OR - 0.00706	0.89991 TO 0.91404	0.89285 TO 0.92110	0.88578 TO 0.92817	5400
57	0.90707	+ OR - 0.00803	0.90024 TO 0.91790	0.89141 TO 0.92674	0.88257 TO 0.93557	3900
62	0.91209	+ OR - 0.01209	0.89996 TO 0.92413	0.88787 TO 0.93622	0.87978 TO 0.94831	2400
67	0.90569	+ OR - 0.00235	0.90313 0.90824	0.90050 TO 0.91079	0.89503 TO 0.91[illegible]	900

Revised Oct. 1990

TABLE 3

k_{eff} OF AN ISOLATED PWR CASK
VERSUS THICKNESS OF WATER REFLECTOR

Thickness of Water Reflector, inch	k_{eff} KENO	k_{eff} ANISN
0	--	0.9438
5 (design thickness - shield jacket full)	0.929 ± .014	0.9442
7	--	0.9443

Revised
Oct. 1990

6.0 DISCUSSION OF RESULTS

The pertinent results of the criticality analysis of the NLI 1/2 spent fuel shipping cask for the reference PWR fuel loading are summarized in Table 9. Results for both KENO and ANISN analyses are included. The KENO results were obtained using the Hansen and Roach cross sections and include the calculational bias obtained from the benchmark problem. The ANISN results are all from a P1-S8 calculation using cross sections from GAM-II and THERMOS. The cask reactivities determined by the two independent methods are in good agreement. The difference may be easily accounted for by differences in cross sections and differences due to the 3 dimensional treatment in KENO versus the 1 dimensional treatment in ANISN. The comparison between the benchmarked KENO results and the ANISN results indicate the validity of the ANISN results in the SAR.

The ANISN results for an isolated cask and for an infinite array of casks (zero leakage) indicate that there is no difference in reactivity between the two conditions; hence, the isolated cask KENO result is also applicable to the array of casks. The maximum reactivity of an array of undamaged casks is therefore less than 0.929 ± .014 with 95% confidence.

The ANISN results for different amounts of water external to a single cask indicate that the cask body effectively isolates the fuel region from thermal neutron effects external to the cask. The reactivity of the single cask under hypothetical accident condition is therefore no more than that given above for normal conditions.

TABLE 9

SUMMARY OF RESULTS OF CRITICALITY ANALYSIS
NLI 1/2 CASK 1 PWR LOADING

	KENO	ANISN
Undamaged Cask		
Single Cask	.929 ± .014*	0.944
Infinite Array of Casks	--	0.944
Damaged Cask		
Single Cask		
0" Surrounding Water	--	0.944
5" Surrounding Water (Neutron shield full)	.929 ± 0.014	0.944
7" Surrounding Water	--	0.944

*95% confidence level

7.0 REFERENCES

1. Whitesides, G.E. and Cross, N.F., "KENO-A Multigroup Monte Carlo Criticality Program", CTC-5, September 1969.

2. Engle, W. W., Jr., "A User's Manual for ANISN: A One-Dimensional Discrete Ordinates Transport Code with Anisotropic Scattering," K-1693, Union Carbide Corp., March 1967.

3. Hansen, G.E. and Roach, W.H., "Six and Sixteen Group Cross Sections for Fast and Intermediate Critical Assemblies", LAMS-2543, 1961.

4. "NLI 1/2 LWT Cask Safety Analysis Report", Amendment 1, Docket No. 70-1318, December 1972.

5. KENO XSEC TAPE, a sixteen-group Hansen and Roach cross section library as modified from J. R. Knight, obtained by Babcock and Wilcox, ORNL, 1971.

6. Toppel, B.J., et al, "MC^2, A Code to Calculate Multigroup Cross Sections" ANL-7318, June 1967.

7. Bell, G.I., "A Simple Treatment for Effective Resonance Absorption Cross Sections in Dense Lattices", Nuclear Science and Engineering 5, 138 (1959).

8. Hummel, H.H., "Equivalence between Homogeneous and Heterogeneous Resonance Integrals in Cylindrical Geometry". Reactor Physics Division Annual Report, July 1, 1964 to June 30, 1965, ANL-7110, page 319, December 1965.

9. Honeck, H., "THERMOS, A Thermalization Transport Theory Code for Reactor Lattice Calculations", BNL-5826, 1961.

10. Barry, R.F., "LEOPARD - A Spectrum Dependent Non-Spatial Depletion Code for the IBM-7094", WCAP-3269-26, Sept. 1963.

11. Strawbridge, L.E., "Calculation of Lattice Parameters and Criticality for Uniform Water Moderated Lattices" WCAP-3269-25, September 1963, page 20 to 25.

REFERENCES (continued)

12. McFarlane, A.F., "Physics of Operating Pressurized Water Reactors" Nuclear Applications & Technology, November 1970.

13. Irving, D.C. and Morrison, G.W., "PICTURE - An Aid in Debugging GEMO Input Data", ORNL-TM-2892, May 1970.

14. Davison, P.W., et al., "Yankee Critical Experiments - Measurements on Lattices of Stainless Steel Clad Slightly Enriched Uranium Dioxide Fuel Rods in Light Water", YAEC-94, April 1959.

15. Dickinson, Deanne, "Calculational Study of Arrays of Cylinders of Fissile Solution" RFP-1821, Rocky Flat Division, Dow Chemical March 24, 1972.

16. Carter, R. D., "Critical Parameter Calculations with High Burnup Plutonium Solutions", ANS Transactions, Vol. 15, Number 2, November 1972.

17. Bierman, S.R. and Clayton, E.D., "Criticality Experiments on LWR Mixed Oxices at 20 H:Pu+U", ANS Transactions, Vol. 15, Number 2, November 1972.

18. Crume, E.C., "Computer Analysis of the Criticality Safety of Shipping Containers", Union Carbide Corporation, Oak Ridge Y-12 Plant, Proceedings of the Second International Symposium on Packaging and Transportation of Radioactive Materials, October 1968.

This page intentionally left blank.

APPENDIX B

SECTION X

Mark 42 Fuel Assembly KENO Input and Output

```
10ALP
10:40) 1988 Nov 16 Wed 1138:33
NLI-1/2: ROCKWELL BASKET: MARK42 FUEL: NO POISON OR AL: INF ARRAY
200. 86 424 6 27 27 16 7 19 41 8 4 2 1 -16 1 0 2000 0 1 8Z
-1 -1 -1 3R-1
1   94238 2.061-6  1 -94239 1.071-3  1 -94241 3.080-5  1 8016 2.733-3
1   94240 1.0-20  1 94242 1.0-20  1  13027  1.0-20
2   5010 8.361-3  2  6012 1.083-2  2  13027 3.013-2
3   8016 3.3461-2  3   1001 6.6922-2
4   24000 1.839-2  4  28000 1.815-3  4  26000 5.994-2
5   13027 6.026-2
6   82000 3.299-2
7   92238 4.773-2  7   -92235 1.052-4
BOX TYPE  1
CYLINDER  3  2.182 1000. -1000. 27*0.5
CYLINDER  5  2.284 1000. -1000. 27*0.5
CYLINDER  1  2.570 1000. -1000. 27*0.5
CYLINDER  5  2.647 1000. -1000. 27*0.5
CYLINDER  3  3.289 1000. -1000. 27*0.5
CYLINDER  5  3.366 1000. -1000. 27*0.5
CYLINDER  1  3.653 1000. -1000. 27*0.5
CYLINDER  5  3.729 1000. -1000. 27*0.5
CYLINDER  3  4.361 1000. -1000. 27*0.5
CYLINDER  5  4.437 1000. -1000. 27*0.5
CYLINDER  1  4.623 1000. -1000. 27*0.5
CYLINDER  5  4.699 1000. -1000. 27*0.5
CYLINDER  3  5.093 1000. -1000. 27*0.5
CYLINDER  5  5.220 1000. -1000. 27*0.5
CYLINDER  3  5.715 1000. -1000. 27*0.5
CYLINDER  5  6.191 1000. -1000. 27*0.5
CUBOID  3  6.5075 -6.5075  6.5075 -6.5075  1000. -1000. 27*0.5
BOX TYPE  2
CUBOID  2  13.015  0.000  0.1441  0.000   1000. -1000. 27*0.5
CUBOID  4  13.015  0.000  0.7791  0.000   1000. -1000. 27*0.5
BOX TYPE  3
CUBOID  2  0.1441  0.000  13.015  0.000   1000. -1000. 27*0.5
CUBOID  4  0.7791  0.000  13.015  0.000   1000. -1000. 27*0.5
BOX TYPE  4
CUBOID  4   0.000 -0.635   0.000 -0.635   1000. -1000. 27*0.5
CUBOID  2   0.000 -0.7791  0.000 -0.7791  1000. -1000. 27*0.5
BOX TYPE  5
CYLINDER  3  5.715 1000. -1000. 27*0.5
CYLINDER  5  6.191 1000. -1000. 27*0.5
CUBOID  3  6.5075 -6.5075  6.5075 -6.5075  1000. -1000. 27*0.5
BOX TYPE  6
CUBOID  2  0.000 -13.015  0.1441  0.000   1000. -1000. 27*0.5
CUBOID  4  0.000 -13.015  0.7791  0.000   1000. -1000. 27*0.5
BOX TYPE  7
CUBOID  2  0.000 -0.1441  13.015  0.000   1000. -1000. 27*0.5
CUBOID  4  0.000 -0.7791  13.015  0.000   1000. -1000. 27*0.5
BOX TYPE  8
CUBOID  4   0.635  0.000   0.000 -0.635   1000. -1000. 27*0.5
CUBOID  2   0.7791 0.000   0.000 -0.7791  1000. -1000. 27*0.5
CORE BDY  0  13.7941 -13.7941 13.7941 0.00 1000. -1000. 27*0.5
ZHENICYL+Y  3  19.509 1000. -1000. 27*0.5
ZHENICYL+Y  4  19.600 1000. -1000. 27*0.5
ZHENICYL+Y  7  23.309 1000. -1000. 27*0.5
```


Page added
December 1988

```
ZHEMICYL+Y  6  30.706 1000.  -1000.  27*0.5
ZHEMICYL+Y  4  32.93 1000. -1000. 27*0.5
ZHEMICYL+Y  3  45.629  1000.  -1000.  27*0.5
ZHEMICYL+Y  4  46.264  1000.  -1000.  27*0.5
CUBOID  3  46.27 -46.27 46.27 0.00 1000. -1000. 27*0.5
1  4 4 1  2 2 1  1 1 1  0
2  4 4 1  1 1 1  1 1 1  0
3  3 3 1  2 2 1  1 1 1  0
4  3 3 1  1 1 1  1 1 1  0
5  1 1 1  2 2 1  1 1 1  0
6  1 1 1  1 1 1  1 1 1  0
7  2 2 1  2 2 1  1 1 1  0
9  2 2 1  1 1 1  1 1 1  1
END KENO.
```

```
NLI-1/2: ROCKWELL BASKET: MARK42 FUEL: NO POISON OR AL: INF ARRAY
NUMBER OF GENERATIONS                    86        START TYPE                                  1
NUMBER PER GENERATION                   424        GENERATIONS BETWEEN CHECKPOINTS             0
NUMBER OF GENERATIONS TO BE SKIPPED      6         LIST INPUT X-SECTIONS READ FROM TAPE       NO
NUMBER OF ENERGY GROUPS                 27         LIST 1-D MIXTURE X SECTIONS                NO
MAX. NUMBER OF ENERGY TRANSFERS         27         LIST 2-D MIXTURE X-SECTIONS                NO
NUMBER OF INPUT NUCLIDES                16         LIST FISS. AND ABS. BY REGION              NO
NUMBER OF MIXTURES                       7         USE X-SECTIONS FROM PREVIOUS CASE          NO
NUMBER OF MIXING TABLE ENTRIES          19         USE GEOMETRY FROM PREVIOUS CASE            NO
NUMBER OF GEOMETRY CARDS                41         USE VELOCITIES FROM PREVIOUS CASE          NO
NUMBER OF BOX TYPES                      8         COMPUTE MATRIX K-EFFECTIVE BY UNIT         NO
NUMBER OF UNITS IN X DIRECTION           4         COMPUTE MATRIX K-EFFECTIVE BY BOX TYPE     NO
NUMBER OF UNITS IN Y DIRECTION           2         LIST FISS PROB MATRIX BY UNIT              NO
NUMBER OF UNITS IN Z DIRECTION           1         ADJOINT CALCULATION                        NO
NUMBER OF NUCLIDES READ FROM TAPE       -16        USE EXPONENTIAL TRANSFORM                  NO
ALBEDO TYPE                              1         CALCULATE FLUX                             YES
SEARCH TYPE                              0         CALCULATE FISSION DENSITIES                YES
THIS PROBLEM WILL BE RUN WITH SPECULARLY REFLECTING BOUNDARY CONDITION
THE ALBEDOS ARE +X = 1.00000+000 -X = 1.00000+000 +Y = 1.00000+000 -Y = 1.00000+000 +Z = 1.00000+000 -Z = 1.0
MAXIMUM TIME = 200.0000 MINUTES
STORAGE LOCATIONS REQUIRED FOR THIS JOB =      29621
REMAINING AVAILABLE LOCATIONS=     40379
```


Page added
December 1988

NLI-1/2: ROCKWELL BASKET: MARK42 FUEL: NO POISON OR AL: INF ARRAY

MIXTURE	NUCLIDE	DENSITY
1	94238	2.06100-006
1	-94239	1.07100-003
1	-94241	3.08000-005
1	8016	2.73300-003
1	94240	1.00000-020
1	94242	1.00000-020
1	13027	1.00000-020
2	5010	8.36100-003
2	6012	1.08300-002
2	13027	3.01300-002
3	8016	3.34610-002
3	1001	6.69220-002
4	24000	1.83900-002
4	28000	1.81500-003
4	26000	5.99400-002
5	13027	6.02600-002
6	82000	3.29900-002
7	92238	4.77300-002
7	-92235	1.05200-004

CROSS SECTIONS READ FROM TAPE

```
NUCLIDE =      1001   H 1269 F, 1002 T 218 GP 032475(2)
NUCLIDE =      5010   B-10 1273 218NGP 042375 P-3 293K
NUCLIDE =      6012   C-12 1274F,1065T 218 GP 030476(7)
NUCLIDE =      8016   O-16 1276 218 GP 030476(7)
NUCLIDE =     13027   AL-27 1193 218 GP 040375(5)
NUCLIDE =     24000   CR 1191 218NGP WT 1/E P-3 293K SIGP=5+4 RE(042375)
NUCLIDE =     26000   FE 218GP RE 5-17-78(1)
NUCLIDE =     28000   NI 1190 218NGP WT 1/E P-3 293K SIGP=5+4 RE(042375)
NUCLIDE =     82000   PB    1288 218NGP 042375 P-3 293K
NUCLIDE =     92235   U-235 1261 SIGP=5+4 NEWXLACS 218NGP P-3 293K(3)
NUCLIDE =     92238   U-238 218GP RE 5-17-78(1)
NUCLIDE =     94238   PU-238 1050 SIGP=5+4 NEWXLACS P-3 293K F-1/E-M(1.+5)
NUCLIDE =     94239   PU-239 1264 SIGP=5+4 NEWXLACS 218NGP P-3 293K
NUCLIDE =     94240   PU-240 1265 SIGP=5+4 NEWXLACS 218NGP P-3 273K
NUCLIDE =     94241   PU-241 1266 SIGP=5+4 NEWXLACS 218NGP P-3 293K
NUCLIDE =     94242   PU-242 1161 SIGP=5+4 NEWXLACS 218NGP P-3 293K
```

WLI=1/2: ROCKWELL BASKET: MARK42 FUEL: NO POISON OR AL: INF ARRAY

ARRAY DESCRIPTION
2 = 1

5	7	3	1
6	8	4	2

Page added
December 1988

NLI=1/2: ROCKWELL BASKET: MARK42 FUEL: NO POISON OR AL: INF ARRAY

LIFETIME = 1.20888-004 + OR = 1.01291-006 GENERATION TI

NO. OF INITIAL GENERATIONS SKIPPED	AVERAGE K-EFFECTIVE		DEVIATION	67 PER CENT CONFIDENCE INTERVAL	
6	.61216	+ OR =	.00358	.60858 TO	.61575
7	.61248	+ OR =	.00361	.60887 TO	.61610
8	.61254	+ OR =	.00366	.60888 TO	.61620
9	.61266	+ OR =	.00371	.60895 TO	.61637
10	.61286	+ OR =	.00375	.60911 TO	.61661
11	.61288	+ OR =	.00380	.60908 TO	.61669
12	.61369	+ OR =	.00377	.60992 TO	.61745
13	.61361	+ OR =	.00382	.60979 TO	.61742
14	.61332	+ OR =	.00386	.60946 TO	.61718
15	.61345	+ OR =	.00391	.60954 TO	.61736
20	.61431	+ OR =	.00393	.61039 TO	.61824
25	.61564	+ OR =	.00413	.61151 TO	.61977
30	.61618	+ OR =	.00417	.61202 TO	.62035
35	.61766	+ OR =	.00419	.61347 TO	.62185
40	.61761	+ OR =	.00422	.61339 TO	.62183
45	.62112	+ OR =	.00440	.61672 TO	.62552
50	.62367	+ OR =	.00430	.61937 TO	.62797
55	.62588	+ OR =	.00471	.62118 TO	.63059
60	.62796	+ OR =	.00501	.62295 TO	.63297
65	.62815	+ OR =	.00590	.62225 TO	.63405
70	.62771	+ OR =	.00757	.62015 TO	.63528
75	.61645	+ OR =	.00721	.60925 TO	.62366
80	.60626	+ OR =	.00942	.59684 TO	.61568

This page intentionally left blank.

APPENDIX C

SECTION X

Mark 42 Fuel Assembly NITAWL Output

Page Added
December 1988

```
    1S ARRAY     12 ENTRIES READ

    CT

 MSCM      NUMBER OF EXTRA CROSS SECTIONS                          0
 MMT       NUMBER OF NUCLIDES FROM MASTER LIBRARY                 16
 MWT       NUMBER OF NUCLIDES FROM X-SECT LIBRARY (LOG 2)          0
 MXT       NUMBER OF NUCLIDES FROM X-SECT LIBRARY (LOG 7)          0
 MCR       ANISN/DOT/MORSE OUTPUT TRIGGER                          0
 MXX       TOTAL CROSS SECTION POSITION                            0
 MS        WITHIN-GROUP SCATTERING CROSS SECTION POSITION          0
 IRES      NUMBER OF RESONANCE CALCULATIONS                        0
 IQM       TABLE LENGTH FOR CROSS SECTIONS                         0
 IPM       IS AN OLD ANISN LIBRARY MOUNTED ? (0/1:NO/YES)          0
 IPP       OUTPUT OPTION TRIGGER                                  -1
 IFG       PRINT CONTROL - ANISN OUTPUT                            0

THE STORAGE ALLOCATED FOR THIS CASE IS  13000 WORDS

    2S ARRAY     16 ENTRIES READ

    CT

 GENERAL INFORMATION CONCERNING CROSS SECTION LIBRARY
   TAPE IDENTIFICATION NUMBER                    4321
   NUMBER OF NUCLIDES ON TAPE                      82
   NUMBER OF NEUTRON ENERGY GROUPS                 27
   FIRST THERMAL NEUTRON ENERGY GROUP              15
   NUMBER OF GAMMA ENERGY GROUPS                    0
 XSDRN TAPE   4321
                        27 NEUTRON GROUP LIBRARY
                           BASED ON ENDF/B VERSION 4 DATA
                            COMPILED FOR NRC
                             8/3/81
                               L.M.PETRIE     ORNL

NUCLIDES FROM XSDRN TAPE
   1     H 1269 F, 1002 T 21P GP 032475(2)                                  1001
   2     B-10 1273 218NGP 042375 P-3 293K                                   5010
   3     C-12 1274F,1065T 218 GP 030476(7)                                  6012
   4     O-16 1276 218 GP 030476(7)                                         8016
   5     AL-27 1193 218 GP 040375(5)                                       13027
   6     CR 1191 218NGP WT 1/E P-3 293K SIGP=5+4 RE(042375)                24000
   7     FE 218GP RE 5-17-78(1)                                            26000
   8     NI 1190 218NGP WT 1/E P-3 293K SIGP=5+4 RE(042375)                28000
   9     PB   1288 218NGP 042375 P-3 293K                                  82000
  10     U-235 1261 SIGP=5+4 NEWXLACS 218NGP P-3 293K(3)                   92235
  11     U-238 218GP RE 5-17-78(1)                                         92238
  12     PU-239 1050 SIGO=5+4 NEWXLACS P-3 293K F-1/E-M(1.+5)              94238
  13     PU-239 1264 SIGP=5+4 NEWXLACS 218NGP P-3 293K                     94239
  14     PU-240 1265 SIGP=5+4 NEWXLACS 218NGP P-3 273K                     94240
```

```
   15     PU-241 1266 SIGP=5+4 NEWXLACS 218NGP P-3 293K                    94241
   16     PU-242 1161 SIGP=5+4 NEWXLACS 218NGP P-3 293K                    94242

H 1269 F, 1002 T 218 GP 032475(2)                                          1001

B-10 1273 218NGP 042375 P-3 293K                                           5010

C-12 1274F,1065T 218 GP 030476(7)                                          6012

O-16 1276 218 GP 030476(7)                                                 8016

AL-27 1193 218 GP 040375(5)                                               13027

CR 1191 218NGP WT 1/E P-3 293K SIGP=5+4 RE(042375)                        24000

FE 218GP RE 5-17-78(1)                                                    26000

*************************************************************************
NORESONANCE DATA SUPPLIED FOR   26000
INFINITE DILUTION VALUES WILL BE USED
*************************************************************************

NI 1190 218NGP WT 1/E P-3 293K SIGP=5+4 RE(042375)                        28000

PB   1288 218NGP 042375 P-3 293K                                          82000

U-235 1261 SIGP=5+4 NEWXLACS 218NGP P-3 293K(3)                           92235

*************************************************************************
NORESONANCE DATA SUPPLIED FOR   92235
INFINITE DILUTION VALUES WILL BE USED
*************************************************************************

U-238 218GP RE 5-17-78(1)                                                 92238

*************************************************************************
NORESONANCE DATA SUPPLIED FOR   92238
INFINITE DILUTION VALUES WILL BE USED
*************************************************************************

PU-238 1050 SIGO=5+4 NEWXLACS P-3 293K F-1/E-9(1.+5)                      94238

*************************************************************************
NORESONANCE DATA SUPPLIED FOR   94238
INFINITE DILUTION VALUES WILL BE USED
*************************************************************************

PU-239 1264 SIGP=5+4 NEWXLACS 218NGP P-3 293K                             94239

*************************************************************************
NORESONANCE DATA SUPPLIED FOR   94239
INFINITE DILUTION VALUES WILL BE USED
*************************************************************************

PU-240 1265 SIGP=5+4 NEWXLACS 218NGP P-3 273K                             94240

*************************************************************************
```


Page added
December 1988

```
NORESONANCE DATA SUPPLIED FOR   94240
INFINITE DILUTION VALUES WILL BE USED
*****************************************************************************

PU-241 1266 SIGP=5+4 NEWXLACS 21PNGP P-3 293K                          94241

*****************************************************************************
NORESONANCE DATA SUPPLIED FOR   94241
INFINITE DILUTION VALUES WILL BE USED
*****************************************************************************

PU-242 1161 SIGP=5+4 NEWXLACS 21PNGP P-3 293K                          94242

*****************************************************************************
NORESONANCE DATA SUPPLIED FOR   94242
INFINITE DILUTION VALUES WILL BE USED
*****************************************************************************
  ELAPSED TIME   13.39664996 MIN.
```

```
THIS XSDRN WORKING TAPE WAS CREATED
THE TITLE OF THE PARENT CASE IS AS FOLLOWS
27 NEUTRON GROUP LIBRARY
   BASED ON ENDF/B VERSION 4 DATA
    COMPILED FOR NRC
    TAPE ID                          4321          NUMBER OF NUCLIDES                    16
    NUMBER OF NEUTRON GROUPS           27          NUMBER OF GAMMA GROUPS                 0
    FIRST THERMAL GROUP                15
                                 TABLE OF CONTENTS
  H 1269 F, 1002 T 218 GP 032475(2)                                                  ID     1001
  B-10 1273 218NGP 042375 P-3 293K                                                   ID     5010
  C-12 1274F,1065T 218 GP 030476(7)                                                  ID     6012
  O-16 1276 218 GP 030476(7)                                                         ID     8016
  AL-27 1193 218 GP 040375(5)                                                        ID    13027
  CR 1191 218NGP WT 1/E P-3 293K SIGP=5+4 RE(042375)                                 ID    24000
  FE 218GP RE 5-17-78(1)                                                             ID    26000
  NI 1190 218NGP WT 1/E P-3 293K SIGP=5+4 RE(042375)                                 ID    28000
  PB   1288 218NGP 042375 P-3 293K                                                   ID    82000
  U-235 1261 SIGP=5+4 NEWXLACS 218NGP P-3 293K(3)                                    ID    92235
  U-238 218GP RE 5-17-78(1)                                                          ID    92238
  PU-238 1050 SIGO=5+4 NEWXLACS P-3 293K F-1/E-M(1.+5)                               ID    94238
  PU-239 1264 SIGP=5+4 NEWXLACS 218NGP P-3 293K                                      ID    94239
  PU-240 1265 SIGP=5+4 NEWXLACS 218NGP P-3 273K                                      ID    94240
  PU-241 1266 SIGP=5+4 NEWXLACS 218NGP P-3 293K                                      ID    94241
  PU-242 1161 SIGP=5+4 NEWXLACS 218NGP P-3 293K                                      ID    94242
```


Page added
December 1988

This page intentionally left blank.

APPENDIX D

SECTION X

Mark 22 Fuel Assembly KENO Input and Output

Page Added
February 1990

```
@ELT,L STE*MARK22.KENLI
ELT     8R2B (871020 0900:40) 1990 Jan 26 Fri 1515:13
  1.          05     NLI-1/2: ROCKWELL BASKET: MARK22 FUEL: NO POISON : INF ARRAY
  2.          05     200. 51 624 6 27 27 12 8 20 51 16 6 3 1 -12 1 0 2000 0 1 8Z
  3.          05     6R-1
  4.          05     1 -92235 1.9887-3  1  92236 2.33-4  1 92238 2.1426-4  1 13027 5.6357-2
  5.          05     2 -92235 2.0288-3  2  92236 2.3275-4  2 92238 2.1391-4  2 13027 5.6363-2
  6.          05     3  5010 8.361-3  3  6012 1.083-2  3  13027 3.013-2
  7.          05     4  8016 3.3456-2  4   1001 6.6912-2
  8.          05     5  24000 1.821-2  5  26000 6.140-2  5  28000 7.773-3
  9.          05     6  13027 6.051-2
 10.          05     7  82000 3.296-2
 11.          05     8  92238 4.773-2  8   -92235 1.052-4
 12.          05     BOX TYPE  1
 13.          05     CYLINDER  4  2.53365 1000. -1000. 27*0.5
 14.          05     CYLINDER  6  2.60985 1000. -1000. 27*0.5
 15.          05     CYLINDER  1  2.91211 1000. -1000. 27*0.5
 16.          05     CYLINDER  6  2.98831 1000. -1000. 27*0.5
 17.          05     CYLINDER  4  3.67284 1000. -1000. 27*0.5
 18.          05     CYLINDER  6  3.74904 1000. -1000. 27*0.5
 19.          05     CYLINDER  2  3.98780 1000. -1000. 27*0.5
 20.          05     CYLINDER  6  4.06400 1000. -1000. 27*0.5
 21.          05     CYLINDER  4  4.44500 1000. -1000. 27*0.5
 22.          05     CYLINDER  6  5.08000 1000. -1000. 27*0.5
 23.          05     CUBOID  4  5.612 -5.612  5.612 -5.612  1000. -1000. 27*0.5
 24.          05     BOX TYPE  2
 25.          05     CUBOID  5   0.000 -0.635   0.000 -0.635   1000. -1000. 27*0.5
 26.          05     CUBOID  3   0.000 -0.7874  0.000 -0.7874  1000. -1000. 27*0.5
 27.          05     BOX TYPE  3
 28.          05     CUBOID  3  11.224  0.000  0.1524  0.000   1000. -1000. 27*0.5
 29.          05     CUBOID  5  11.224  0.000  0.7874  0.000   1000. -1000. 27*0.5
 30.          05     BOX TYPE  4
 31.          05     CUBOID  3   4.752  0.000  0.1524  0.000   1000. -1000. 27*0.5
 32.          05     CUBOID  5   4.752  0.000  0.7874  0.000   1000. -1000. 27*0.5
 33.          05     BOX TYPE  5
 34.          05     CUBOID  3  0.1524  0.000  11.224  0.000   1000. -1000. 27*0.5
 35.          05     CUBOID  5  0.7874  0.000  11.224  0.000   1000. -1000. 27*0.5
 36.          05     BOX TYPE  6
 37.          05     CUBOID  8   0.000 -1.7447  0.000 -3.4894  1000. -1000. 27*0.5
 38.          05     CUBOID  5   0.000 -2.8134  0.000 -5.6270  1000. -1000. 27*0.5
 39.          05     CUBOID  4   0.000 -4.7520  0.000 -11.224  1000. -1000. 27*0.5
 40.          05     BOX TYPE  7
 41.          05     CUBOID  3  0.1524  0.000  4.7520  0.000   1000. -1000. 27*0.5
 42.          05     CUBOID  5  0.7874  0.000  4.7520  0.000   1000. -1000. 27*0.5
 43.          05     BOX TYPE  8
 44.          05     CUBOID  8   0.000 -1.5140  0.000 -1.5140  1000. -1000. 27*0.5
 45.          05     CUBOID  5   0.000 -2.4700  0.000 -2.4700  1000. -1000. 27*0.5
 46.          05     CUBOID  4   0.000 -11.224  0.000 -4.7520  1000. -1000. 27*0.5
 47.          05     BOX TYPE  9
 48.          05     CUBOID  5  1.2580  0.000  1.2580  0.000   1000. -1000. 27*0.5
 49.          05     CUBOID  8  4.7520  0.000  4.7520  0.000   1000. -1000. 27*0.5
 50.          05     BOX TYPE  10
 51.          05     CUBOID  4  5.612 -5.612  5.612 -5.612  1000. -1000. 27*0.5
 52.          05     BOX TYPE  11
 53.          05     CUBOID  5   0.635  0.000   0.000 -0.635   1000. -1000. 27*0.5
 54.          05     CUBOID  3   0.7874 0.000   0.000 -0.7874  1000. -1000. 27*0.5
 55.          05     BOX TYPE  12
 56.          05     CUBOID  3  0.000 -0.1524  11.224  0.000   1000. -1000. 27*0.5
 57.          05     CUBOID  5  0.000 -0.7874  11.224  0.000   1000. -1000. 27*0.5
 58.          05     BOX TYPE  13
 59.          05     CUBOID  8   1.7447 0.000   0.000 -3.4894  1000. -1000. 27*0.5
 60.          05     CUBOID  5   2.8134 0.000   0.000 -5.6270  1000. -1000. 27*0.5
 61.          05     CUBOID  4   4.7520 0.000   0.000 -11.224  1000. -1000. 27*0.5
 62.          05     BOX TYPE  14
 63.          05     CUBOID  3  0.000 -0.1524  4.7520  0.000   1000. -1000. 27*0.5
 64.          05     CUBOID  5  0.000 -0.7874  4.7520  0.000   1000. -1000. 27*0.5
 65.          05     BOX TYPE  15
```

```
 66.        05     CUBOID  8   1.5140 0.000   0.000 -1.5140  1000. -1000. 27*0.5
 67.        05     CUBOID  5   2.4700 0.000   0.000 -2.4700  1000. -1000. 27*0.5
 68.        05     CUBOID  4   11.224 0.000   0.000 -4.7520  1000. -1000. 27*0.5
 69.        05     BOX TYPE  16
 70.        05     CUBOID  5  0.000 -1.2580  1.2580  0.000   1000. -1000. 27*0.5
 71.        05     CUBOID  8  0.000 -4.7520  4.7520  0.000   1000. -1000. 27*0.5
 72.        05     CORE BDY  0  16.7634 -16.7634 16.7634 0.00 1000. -1000. 27*0.5
 73.        05     ZHEMICYL+Y  8  25.309 1000. -1000. 27*0.5
 74.        05     ZHEMICYL+Y  7  30.706 1000. -1000. 27*0.5
 75.        05     ZHEMICYL+Y  5  32.929 1000. -1000. 27*0.5
 76.        05     ZHEMICYL+Y  4  45.629 1000. -1000. 27*0.5
 77.        05     ZHEMICYL+Y  5  46.264 1000. -1000. 27*0.5
 78.        05     CUBOID  4  46.27 -46.27 46.27 0.00 1000. -1000. 27*0.5
 79.        05     4  1 1 1  1 1 1  1 1 1  0
 80.        05     3  2 2 1  1 1 1  1 1 1  0
 81.        05     11 3 3 1  1 1 1  1 1 1  0
 82.        05     2  4 4 1  1 1 1  1 1 1  0
 83.        05     3  5 5 1  1 1 1  1 1 1  0
 84.        05     4  6 6 1  1 1 1  1 1 1  0
 85.        05     13 1 1 1  2 2 1  1 1 1  0
 86.        05     10 2 2 1  2 2 1  1 1 1  0
 87.        05     12 3 3 1  2 2 1  1 1 1  0
 88.        05     5  4 4 1  2 2 1  1 1 1  0
 89.        05     1  5 5 1  2 2 1  1 1 1  0
 90.        05     6  6 6 1  2 2 1  1 1 1  0
 91.        05     16 1 1 1  3 3 1  1 1 1  0
 92.        05     15 2 2 1  3 3 1  1 1 1  0
 93.        05     14 3 3 1  3 3 1  1 1 1  0
 94.        05     7  4 4 1  3 3 1  1 1 1  0
 95.        05     8  5 5 1  3 3 1  1 1 1  0
 96.        05     9  6 6 1  3 3 1  1 1 1  1
 97.        05     END KENO.
END ELT.  ERRORS: NONE. TIME:  1.777 SEC. IMAGE COUNT: 97
@XQT,B 421000*KENO.KENO
```

```
NLI-1/2: ROCKWELL BASKET: MARK22 FUEL: NO POISON : INF ARRAY
NUMBER OF GENERATIONS                    51          START TYPE                                  1
NUMBER PER GENERATION                   624          GENERATIONS BETWEEN CHECKPOINTS             0
NUMBER OF GENERATIONS TO BE SKIPPED       6          LIST INPUT X-SECTIONS READ FROM TAPE       NO
NUMBER OF ENERGY GROUPS                  27          LIST 1-D MIXTURE X SECTIONS                NO
MAX. NUMBER OF ENERGY TRANSFERS          27          LIST 2-D MIXTURE X-SECTIONS                NO
NUMBER OF INPUT NUCLIDES                 12          LIST FISS. AND ABS. BY REGION              NO
NUMBER OF MIXTURES                        8          USE X-SECTIONS FROM PREVIOUS CASE          NO
NUMBER OF MIXING TABLE ENTRIES           20          USE GEOMETRY FROM PREVIOUS CASE            NO
NUMBER OF GEOMETRY CARDS                 51          USE VELOCITIES FROM PREVIOUS CASE          NO
NUMBER OF BOX TYPES                      16          COMPUTE MATRIX K-EFFECTIVE BY UNIT         NO
NUMBER OF UNITS IN X DIRECTION            6          COMPUTE MATRIX K-EFFECTIVE BY BOX TYPE     NO
NUMBER OF UNITS IN Y DIRECTION            3          LIST FISS PROB MATRIX BY UNIT              NO
NUMBER OF UNITS IN Z DIRECTION            1          ADJOINT CALCULATION                        NO
NUMBER OF NUCLIDES READ FROM TAPE       -12          USE EXPONENTIAL TRANSFORM                  NO
ALBEDO TYPE                               1          CALCULATE FLUX                            YES
SEARCH TYPE                               0          CALCULATE FISSION DENSITIES               YES
THIS PROBLEM WILL BE RUN WITH SPECULARLY REFLECTING BOUNDARY CONDITION
THE ALBEDOS ARE +X = 1.00000+000 -X = 1.00000+000 +Y = 1.00000+000 -Y = 1.00000+000 +Z = 1.00000+000 -Z = 1.00000+000
MAXIMUM TIME = 200.0000 MINUTES
STORAGE LOCATIONS REQUIRED FOR THIS JOB =     37083
REMAINING AVAILABLE LOCATIONS=     32917
```

Page Added
February 1990

NL1-1/2: ROCKWELL BASKET: MARK22 FUEL: NO POISON : INF ARRAY

MIXTURE	NUCLIDE	DENSITY
1	-92235	1.98870-003
1	92236	2.33000-004
1	92238	2.14260-004
1	13027	5.63570-002
2	-92235	2.02880-003
2	92236	2.32750-004
2	92238	2.13910-004
2	13027	5.63630-002
3	5010	8.36100-003
3	6012	1.08300-002
3	13027	3.01300-002
4	8016	3.34560-002
4	1001	6.69120-002
5	24000	1.82100-002
5	26000	6.14000-002
5	28000	7.77300-003
6	13027	6.05100-002
7	82000	3.29600-002
8	92238	4.77300-002
8	-92235	1.05200-004

CROSS SECTIONS READ FROM TAPE

```
NUCLIDE =      1001   H 1269 F, 1002 T 218 GP 032475(2)
NUCLIDE =      5010   B-10 1273 218NGP 042375 P-3 293K
NUCLIDE =      6012   C-12 1274F,1065T 218 GP 030476(7)
NUCLIDE =      8016   O-16 1276 218 GP 030476(7)
NUCLIDE =     13027   AL-27 1193 218 GP 040375(5)
NUCLIDE =     24000   CR 1191 218NGP WT 1/E P-3 293K SIGP=5+4 RE(042375)
NUCLIDE =     26000   FE 218GP RE 5-17-78(1)
NUCLIDE =     28000   NI 1190 218NGP WT 1/E P-3 293K SIGP=5+4 RE(042375)
NUCLIDE =     82000   PB   1288 218NGP 042375 P-3 293K
NUCLIDE =     92235   U-235 1261 SIGP=5+4 NEWXLACS 218NGP P-3 293K(3)
NUCLIDE =     92236   U-236 1163 SIGO=5+4 NEWXLACS P-3 293K F-1/E-N(1.+5)
NUCLIDE =     92238   U-238 218GP RE 5-17-78(1)
```


Page Added
February 1990

NLI-1/2: ROCKWELL BASKET: MARK22 FUEL: NO POISON : INF ARRAY
ARRAY DESCRIPTION
Z = 1

16	15	14	7	8	9
13	10	12	5	1	6
4	3	11	2	3	4

NLI-1/2: ROCKWELL BASKET: MARK22 FUEL: NO POISON : INF ARRAY
LIFETIME = 1.07860-004 + OR - 7.38088-007 GENERATION TIME = 5.89191-005 + OR - 5.07176-007

NO. OF INITIAL GENERATIONS SKIPPED	AVERAGE K-EFFECTIVE	DEVIATION	67 PER CENT CONFIDENCE INTERVAL	95 PER CENT CONFIDENCE INTERVAL	99 PER CENT CONFIDENCE INTERVAL	NUMBER OF HISTORIES
6	.53257	+ OR - .00373	.52884 TO .53631	.52511 TO .54004	.52137 TO .54378	28080
7	.53257	+ OR - .00382	.52875 TO .53639	.52493 TO .54021	.52111 TO .54403	27456
8	.53186	+ OR - .00384	.52802 TO .53571	.52418 TO .53955	.52034 TO .54339	26832
9	.53123	+ OR - .00388	.52735 TO .53512	.52347 TO .53900	.51959 TO .54288	26208
10	.53151	+ OR - .00397	.52755 TO .53548	.52358 TO .53945	.51961 TO .54342	25584
11	.53088	+ OR - .00402	.52686 TO .53489	.52285 TO .53891	.51883 TO .54292	24960
12	.53220	+ OR - .00389	.52831 TO .53609	.52442 TO .53998	.52053 TO .54387	24336
13	.53118	+ OR - .00385	.52733 TO .53504	.52347 TO .53889	.51962 TO .54275	23712
14	.53242	+ OR - .00375	.52867 TO .53617	.52492 TO .53992	.52117 TO .54367	23088
15	.53193	+ OR - .00382	.52810 TO .53575	.52428 TO .53958	.52046 TO .54340	22464
20	.53289	+ OR - .00434	.52856 TO .53723	.52422 TO .54156	.51988 TO .54590	19344
25	.53443	+ OR - .00507	.52936 TO .53950	.52430 TO .54457	.51923 TO .54964	16224
30	.53689	+ OR - .00565	.53124 TO .54254	.52559 TO .54819	.51994 TO .55384	13104
35	.53354	+ OR - .00671	.52683 TO .54026	.52012 TO .54697	.51340 TO .55368	9984
40	.53186	+ OR - .00908	.52277 TO .54094	.51369 TO .55002	.50461 TO .55910	6864
45	.53520	+ OR - .01370	.52150 TO .54890	.50780 TO .56260	.49410 TO .57630	3744

Page Added
February 1990

This page intentionally left blank.

APPENDIX E

SECTION X

Mark 22 Fuel Assembly NITAWL Output

Page Added
February 1990

```
@ADD,P STE*MARK22.NITINDUL
   1$ ARRAY     12 ENTRIES READ
   0T
 MSCM      NUMBER OF EXTRA CROSS SECTIONS                          0
 MMT       NUMBER OF NUCLIDES FROM MASTER LIBRARY                 12
 MWT       NUMBER OF NUCLIDES FROM X-SECT LIBRARY (LOG 2)          0
 MXT       NUMBER OF NUCLIDES FROM X-SECT LIBRARY (LOG 3)          0
 MCR       ANISN/DOT/MORSE OUTPUT TRIGGER                          0
 MXX       TOTAL CROSS SECTION POSITION                            0
 MS        WITHIN-GROUP SCATTERING CROSS SECTION POSITION          0
 IRES      NUMBER OF RESONANCE CALCULATIONS                        0
 IQM       TABLE LENGTH FOR CROSS SECTIONS                         0
 IPM       IS AN OLD ANISN LIBRARY MOUNTED ? (0/1:NO/YES)          0
 IPP       OUTPUT OPTION TRIGGER                                  -1
 IFG       PRINT CONTROL - ANISN OUTPUT                            0
THE STORAGE ALLOCATED FOR THIS CASE IS  13000 WORDS
   2$ ARRAY     12 ENTRIES READ.
   0T
 GENERAL INFORMATION CONCERNING CROSS SECTION LIBRARY
   TAPE IDENTIFICATION NUMBER                 4321
   NUMBER OF NUCLIDES ON TAPE                   82
   NUMBER OF NEUTRON ENERGY GROUPS              27
   FIRST THERMAL NEUTRON ENERGY GROUP           15
   NUMBER OF GAMMA ENERGY GROUPS                 0
 XSDRN TAPE   4321
                        27 NEUTRON GROUP LIBRARY
                           BASED ON ENDF/B VERSION 4 DATA
                            COMPILED FOR NRC
                             8/3/81
                               L.M.PETRIE    ORNL
 NUCLIDES FROM XSDRN TAPE
   1    H 1269 F, 1002 T 218 GP 032475(2)                                  1001
   2    B-10 1273 218NGP 042375 P-3 293K                                   5010
   3    C-12 1274F,1065T 218 GP 030476(7)                                  6012
   4    O-16 1276 218 GP 030476(7)                                         8016
   5    AL-27 1193 218 GP 040375(5)                                       13027
   6    CR 1191 218NGP WT 1/E P-3 293K SIGP=5+4 RE(042375)                24000
   7    FE 218GP RE 5-17-78(1)                                            26000
   8    NI 1190 218NGP WT 1/E P-3 293K SIGP=5+4 RE(042375)                28000
   9    PB   1288 218NGP 042375 P-3 293K                                  82000
  10    U-235 1261 SIGP=5+4 NEWXLACS 218NGP P-3 293K(3)                   92235
  11    U-236 1163 SIGO=5+4 NEWXLACS P-3 293K F-1/E-M(1.+5)               92236
  12    U-238 218GP RE 5-17-78(1)                                         92238
```

```
H 1269 F, 1002 T 218 GP 032475(2)                                    1001
B-10 1273 218NGP 042375 P-3 293K                                     5010
C-12 1274F,1065T 218 GP 030476(7)                                    6012
O-16 1276 218 GP 030476(7)                                           8016
AL-27 1193 218 GP 040375(5)                                         13027
CR 1191 218NGP WT 1/E P-3 293K SIGP=5+4 RE(042375)                  24000
FE 218GP RE 5-17-78(1)                                              26000
*******************************************************************************
NORESONANCE DATA SUPPLIED FOR   26000
INFINITE DILUTION VALUES WILL BE USED
*******************************************************************************
NI 1190 218NGP WT 1/E P-3 293K SIGP=5+4 RE(042375)                  28000
PB   1288 218NGP 042375 P-3 293K                                    82000
U-235 1261 SIGP=5+4 NEWXLACS 218NGP P-3 293K(3)                     92235
*******************************************************************************
NORESONANCE DATA SUPPLIED FOR   92235
INFINITE DILUTION VALUES WILL BE USED
*******************************************************************************
U-236 1163 SIGO=5+4 NEWXLACS P-3 293K F-1/E-M(1.+5)                 92236
*******************************************************************************
NORESONANCE DATA SUPPLIED FOR   92236
INFINITE DILUTION VALUES WILL BE USED
*******************************************************************************
U-238 218GP RE 5-17-78(1)                                           92238
*******************************************************************************
NORESONANCE DATA SUPPLIED FOR   92238
INFINITE DILUTION VALUES WILL BE USED
*******************************************************************************
  ELAPSED TIME   10.13243330 MIN.
```

```
THIS XSDRN WORKING TAPE WAS CREATED
THE TITLE OF THE PARENT CASE IS AS FOLLOWS
27 NEUTRON GROUP LIBRARY
   BASED ON ENDF/B VERSION 4 DATA
    COMPILED FOR NRC
    TAPE ID                          4321        NUMBER OF NUCLIDES                12
    NUMBER OF NEUTRON GROUPS           27        NUMBER OF GAMMA GROUPS             0
    FIRST THERMAL GROUP                15
                                TABLE OF CONTENTS
  N 1269 F, 1002 T 218 GP 032475(2)                                          ID    1001
  B-10 1273 218NGP 042375 P-3 293K                                           ID    5010
  C-12 1274F,1065T 218 GP 030476(7)                                          ID    6012
  O-16 1276 218 GP 030476(7)                                                 ID    8016
  AL-27 1193 218 GP 040375(5)                                                ID   13027
  CR 1191 218NGP WT 1/E P-3 293K SIGP=5+4 RE(042375)                         ID   24000
  FE 218GP RE 5-17-78(1)                                                     ID   26000
  NI 1190 218NGP WT 1/E P-3 293K SIGP=5+4 RE(042375)                         ID   28000
  PB   1288 218NGP 042375 P-3 293K                                           ID   82000
  U-235 1261 SIGP=5+4 NEWXLACS 218NGP P-3 293K(3)                            ID   92235
  U-236 1163 SIGO=5+4 NEWXLACS P-3 293K F-1/E-M(1.+5)                        ID   92236
  U-238 218GP RE 5-17-78(1)                                                  ID   92238
@BRKPT PRINTS
```

APPENDIX F

SECTION X

Computer Input and Output for Fermi-1 Fuel and EBR-II Blanket Fuel

Page Added
Oct. 1990

NITAWL - FERMI-1 NORMAL OPERATION

```
-*KENO.N27
10 07/17/86 10:50:17 (22)
     19        1SS 0 17 52 2 2Z -1 0 T
     19        2SS 92238 -592233 92235 -592235 8016 -555081  1001 -555011 13027
     18            40000 24000 28000 26000 82000 5010 6012 42000
     22        3** 92238 294. 2 .1880 .3464 76.34 2.932-2 1 96 2.22 1 3Z 1.0
     19            592238 294. 0 0.0 0.00 20.0 4.773-2 1 3Z 3Z 1.0 T

RORS: NONE. TIME:  0.302 SEC. IMAGE COUNT: 5


 - IN CONTROL MODE


NITAWL.NITAWL
```

Page Added
Oct. 1990

```
THIS XSDRN WORKING TAPE WAS CREATED
THE TITLE OF THE PARENT CASE IS AS FOLLOWS
27 NEUTRON GROUP LIERARY
   BASED ON ENDF/B VERSION 4 DATA
    COMPILED FOR NRC
    TAPE ID                                  4321          NUMBER OF NUCLIDES
    NUMBER OF NEUTRON GROUPS                   27          NUMBER OF GAMMA GROUPS
    FIRST THERMAL GROUP                        15
                                        TABLE OF CONTENTS
  H 1269 F, 1002 T 218 GP 032475(2)
  H 1269 F, 1002 T 218 GP 032475(2)
  B-10 1273 218NGP 042375 P-3 293K
  C-12 1274F,1065T 218 GP 030476(7)
  O-16 1276 218 GP 030476(7)
  O-16 1276 218 GP 030476(7)
  AL-27 1193 218 GP 040375(5)
  CR 1191 218NGP WT 1/E P-3 293K SIGP=5+4 RE(042375)
  FE 218GP RE 5-17-78(1)
  NI 1190 218NGP WT 1/E P-3 293K SIGP=5+4 RE(042375)
  ZR(NAT) 7141 21 NGP WT FIS(0.1TO20)-1/E-MAX P-3
  MO (1287) SIGP=5+4 NEWXLACS 218NGP F-1/E-M P-3 293K
  PB   1223 218NGP 042375 P-3 293K
  U-235 1261 SIGP=5+4 NEWXLACS 218NGP P-3 293K(3)
  U-235 1261 SIGP=5+4 NEWXLACS 218NGP P-3 293K(3)
  U-238 218GP RE 5-17-78(1)
  U-238 218GP RE 5-17-78(1)

KPT PRINTS
```

XSDRNPM - FERMI-1 NORMAL OPERATION

```
.ENO.X27
.7/17/86 11:19:19 (19)
  15        XSDRNPM FOR FERMI-1 METAL FUEL
  17        1SS 2 3 20 1 3 3 39 8 3 1 2R10 F0
  15        2SS -2 F0
  15        3SS 1 3Z 1000 2Z 1 F3
  15        4SS -1 27 0 -2 E T
  17        13SS 3R1 2 2R3 11R1 11R2 11R3
  15        14SS 92235 92238 42000 40000 555081 555011
  15             8016 1001 82000 24000 28000 26000
  17              13027 5010 6012  592238 592235 2011
  19        15** 1.0218-2 2.932-2 1.087-2 4.227-2 3.3461-2 6.6922-2 F1.-15 T
  15        33** F1.0 T
  16        35** 9I0.0 .188 .189 7I.2007 .3633
  15        36SS 10R1 2R2 8R3
  15        38** 10R1.0 0.0 F1.0
  15        39SS 1 2 3
  15        40SS F3
  15        51SS 1 2 3 4 5 6 7 8 9 10 11 12 13 14 15 16 17
  15            13 19 20 21 22 23 24 25 26 27 T

:: NONE. TIME:  0.278 SEC. IMAGE COUNT: 18

:NPM.XSDRNPM
```

Page Added
Oct. 1990

```
3ADD,DEP 998CC4*KENO.X27
                                XSDRNPM FOR FERMI-1 METAL FUEL

    1S ARRAY      15 ENTRIES READ

    2S ARRAY      10 ENTRIES READ

    3S ARRAY      12 ENTRIES READ

    4S ARRAY       9 ENTRIES READ

    OT

DIRECT ACCESS FILES ASSIGNED
  3000 WORDS PER RECORD ON UNIT 8          1 PHYSICAL RECORDS PER LOGICAL
   880 WORDS PER RECORD ON UNIT 9         10 PHYSICAL RECORDS PER LOGICAL
  3000 WORDS PER RECORD ON UNIT 10          1 PHYSICAL RECORDS PER LOGICAL

GENERAL PROBLEM DESCRIPTION DATA BLOCK

                                   GENERAL PROBLEM DATA

IGE   1/2/3 = PLANE/CYLINDER/SPHERE        2        ISN   QUADRATURE ORDER
IZM   NUMBER OF ZONES                      3        ISCT  ORDER OF SCATTERING
IM    NUMBER OF SPACIAL INTERVALS         20        IEVT  0/1/2/3/4/5/6=2/K/ALPHA
IBL   0/1/2/3 = VACUUM/REFL/PER/WHITE      1        IIM   INNER ITERATION MAXIMUM
IBR   RIGHT BOUNDARY CONDITION             3        ICM   OUTER ITERATION MAXIMUM
MXX   NUMBER OF MIXTURES                   3        ICLC  -1/0/N--FLAT RES/SN/OPT
MS    MIXING TABLE LENGTH                 39        ITH   0/1 = FORWARD/ADJOINT
IGM   NUMBER OF ENERGY GROUPS             27        IFLU  0/1/2/3/4=L-S/L/S/W/L-W
NNG   NUMBER OF NEUTRON GROUPS            27        IPRT  -2/-1/0/N=MIXTURE XSEC
NGG   NUMBER OF GAMMA GROUPS               0        ID1   0/1/2/3=NO/PRT ND/PCH N
IFTG  NUMBER OF FIRST THERMAL GROUP       15        IPBT  -1/0/1=NONE/FINE/ALL BA

                                   SPECIAL OPTIONS

IFG   0/1 = NONE/WEIGHTING CALCULATION     1        IPN   DUMMY PARAMETER
IQM   VOLUMETRIC SOURCES (0/N=NO/YES)      0        IDFM  0/1 = NONE/DENSITY FACT
IPM   BOUNDARY SOURCES (0/N=NO/YES)        0        IAZ   0/N = NONE/N ACTIVITIES
IFN   0/1/2 = INPUT 33*/34*/USE LAST       0        IAI   0/1=NONE/ACTIVITIES BY
ITMX  MAXIMUM TIME (MINUTES)            1000        IFCT  0/1=NO/YES UPSCATTER SC
IDT1  0/1/2/3=NO/XSECT/SRCE/FLUX--OUT      0        IPVT  0/1/2=NO/K/ALPHA PARAME

                                   WEIGHTING DATA (IFG=1)

ICON  -1/0/1=CELL/ZONE/REGION WEIGHT      -1        IHTF  TOTAL XSECT PSN IN BRD
IGMF  NUMBER OF BROAD GROUPS              27        NDSF  PSN G-G OR FILE NUMBER
ITP   0/10/20/30/40 0/C/E/AC/A             0        NUSF  TABLE LENGTH OR MAX ORD
IPP   -2/-1/0/N=WGTED XSECT PRINT         -2        MSCM  EXTRA 1-D X-SECT POSITI
IAP   -1/N ANISN XSECT PRINT              -1

                                   FLOATING POINT PARAMETERS
```


Page Added
Oct. 1990

XSDRNPM FOR FERMI-1 METAL FUEL

AY 39 ENTRIES READ

AY 39 ENTRIES READ

AY 39 ENTRIES READ

DATA BLOCK 2 (MIXING TABLE, ETC.)

DES APE	CCCC IDENTIFICATION	MIXTURE	MIXING TABLE COMPONENT	ATOM DENSITY
1001		1	92235	.10213-001
5011		1	92238	.29320-001
5010		1	42000	.10870-001
6012		2	40000	.42270-001
8016		3	555081	.33461-001
5081		3	555011	.66922-001
3027		1	8016	.10000-014
4000		1	1001	.10000-014
6000		1	82000	.10000-014
0000		1	24000	.10000-014
.0000		1	28000	.10000-014
.2000		1	26000	.10000-014
.2000		1	13027	.10000-014
.2235		1	5010	.10000-014
.2235		1	6012	.10000-014
.2238		1	592238	.10000-014
.2238		1	592235	.10000-014
.2238		2	8016	.10000-014
.2238		2	1001	.10000-014
.2238		2	82000	.10000-014
.2238		2	24000	.10000-014
.2238		2	28000	.10000-014
.2238		2	26000	.10000-014
.2238		2	13027	.10000-014
.2238		2	5010	.10000-014
.2238		2	6012	.10000-014
.2238		2	592238	.10000-014
.2238		2	592235	.10000-014
.2238		3	8016	.10000-014
.2238		3	1001	.10000-014
.2238		3	82000	.10000-014
.2238		3	24000	.10000-014
.2238		3	28000	.10000-014
.2238		3	26000	.10000-014
.2238		3	13027	.10000-014
.2238		3	5010	.10000-014
.2238		3	6012	.10000-014
.2238		3	592238	.10000-014
.2238		3	592235	.10000-014

MIXING CROSS SECTIONS
TIME .00000000 MIN.

Page Added
Oct. 1990

```
OUTER INNER        BALANCE     UPSCATTER RATIO     EIGENVALUE          LAMBDA1
    1   254    1.0000026+000   7.7642534-001    1.1001459+000    1.0788629+000
    2   491    1.0000027+000   1.0707040+000    1.4294742+000    1.3276672+000
    3   701    1.0000028+000   1.0299312+000    1.5103499+000    1.0552144+000
    4   874    1.0000029+000   1.0113186+000    1.5285615+000    1.0115772+000
    5   995    1.0000028+000   1.0033013+000    1.5323223+000    1.0022611+000
    6  1058    1.0000028+000   1.0006182+000    1.5326419+000    1.0001417+000
    7  1086    1.0000028+000   1.0000592+000    1.5327520+000    1.0000579+000
GRP.    1 REQUIRED    1 ITERATIONS. MFD OF  8.30392-005 OCCURRED IN INT.  20  CO
GRP.    2 REQUIRED    1 ITERATIONS. MFD OF  6.64191-005 OCCURRED IN INT.  20  CO
GRP.    3 REQUIRED    1 ITERATIONS. MFD OF  6.49530-005 OCCURRED IN INT.  20  CO
GRP.    4 REQUIRED    1 ITERATIONS. MFD OF  6.97308-005 OCCURRED IN INT.  20  CO
GRP.    5 REQUIRED    1 ITERATIONS. MFD OF  5.86760-005 OCCURRED IN INT.  20  CO
GRP.    6 REQUIRED    1 ITERATIONS. MFD OF  5.87569-005 OCCURRED IN INT.  20  CO
GRP.    7 REQUIRED    1 ITERATIONS. MFD OF  4.98808-005 OCCURRED IN INT.  20  CO
GRP.    8 REQUIRED    1 ITERATIONS. MFD OF  4.92717-005 OCCURRED IN INT.  20  CO
GRP.    9 REQUIRED    1 ITERATIONS. MFD OF  5.06186-005 OCCURRED IN INT.  17  CO
GRP.   10 REQUIRED    1 ITERATIONS. MFD OF  5.01321-005 OCCURRED IN INT.  16  CO
GRP.   11 REQUIRED    1 ITERATIONS. MFD OF  4.89183-005 OCCURRED IN INT.  15  CO
GRP.   12 REQUIRED    1 ITERATIONS. MFD OF  5.66715-005 OCCURRED IN INT.  15  CO
GRP.   13 REQUIRED    1 ITERATIONS. MFD OF  5.63124-005 OCCURRED IN INT.  15  CO
GRP.   14 REQUIRED    1 ITERATIONS. MFD OF  5.10950-005 OCCURRED IN INT.  15  CO
GRP.   15 REQUIRED    1 ITERATIONS. MFD OF  1.91663-005 OCCURRED IN INT.   1  CO
GRP.   16 REQUIRED    1 ITERATIONS. MFD OF  2.11288-005 OCCURRED IN INT.   1  CO
GRP.   17 REQUIRED    1 ITERATIONS. MFD OF  2.56110-005 OCCURRED IN INT.   1  CO
GRP.   18 REQUIRED    1 ITERATIONS. MFD OF  2.64325-005 OCCURRED IN INT.   1  CO
GRP.   19 REQUIRED    1 ITERATIONS. MFD OF  2.36228-005 OCCURRED IN INT.   1  CO
GRP.   20 REQUIRED    1 ITERATIONS. MFD OF  2.44632-005 OCCURRED IN INT.   1  CO
GRP.   21 REQUIRED    1 ITERATIONS. MFD OF  3.77428-005 OCCURRED IN INT.   1  CO
GRP.   22 REQUIRED    1 ITERATIONS. MFD OF  2.86500-005 OCCURRED IN INT.   1  CO
GRP.   23 REQUIRED    1 ITERATIONS. MFD OF  1.86630-005 OCCURRED IN INT.   1  CO
GRP.   24 REQUIRED    1 ITERATIONS. MFD OF  3.30656-005 OCCURRED IN INT.  20  CO
GRP.   25 REQUIRED    1 ITERATIONS. MFD OF  5.13642-005 OCCURRED IN INT.  20  CO
GRP.   26 REQUIRED    1 ITERATIONS. MFD OF  2.80517-005 OCCURRED IN INT.  20  CO
GRP.   27 REQUIRED    1 ITERATIONS. MFD OF  1.71842-005 OCCURRED IN INT.  17  CO
    2  1113    1.0000028+000   1.0000476+000   1.5328507+000   1.0000611+000
        FINAL MINITOR          LAMBDA  1.5329135+000          ANGULAR FLUX ON
 ELAPSED TIME    2.90218329 MIN.
```


Page Added
Oct. 1990

KENO - FERMI-1 NORMAL OPERATION

```
KENO.KB040FER
 07/17/86 11:31:10 (13)
   14        FOUR ASBL BASKET FOR FERMI-1 FUEL, .040 BORON
   15       200. 56 403 6 27 27 17 7 13 25 8 4 2 1 -17 1 0 2000 0 1 BZ
   14       -1 0 0 3R-1
   18       1  -92235 2.7362-3  1  92238 7.8491-3  1  42000 2.910-3
   18       1   40000 1.5806-3  1  555011 4.6515-2   1  555081  2.3253-2
   14       2   5010 8.361-3  2  6012 1.083-2  2  13027 3.013-2
   14       3    8016 3.3461-2  3   1001 6.6922-2
   14       4   24000 1.839-2  4  28000 1.815-3  4  26000 5.994-2
   14       5   13027 6.026-2
   14       6   82000 3.299-2
   14       7   592238 4.773-2  7   -592235 1.052-4
   14       BOX TYPE  1
   16       CUBOID  1   3.810  -3.810   3.810  -3.810   1000. -1000. 27*0.5
   16       CUBOID  3  6.5075 -6.5075  6.5075 -6.5075   1000. -1000. 27*0.5
   14       BOX TYPE  2
   15       CUBOID  2  13.015  0.000  0.1441  0.000   1000. -1000. 27*0.5
   15       CUBOID  4  13.015  0.000  0.7791  0.000   1000. -1000. 27*0.5
   14       BOX TYPE  3
   15       CUBOID  2  0.1441  0.000  13.015  0.000   1000. -1000. 27*0.5
   15       CUBOID  4  0.7791  0.000  13.015  0.000   1000. -1000. 27*0.5
   14       BOX TYPE  4
   14       CUBOID  4   0.000 -0.635   0.000 -0.635   1000. -1000. 27*0.5
   14       CUBOID  2   0.000 -0.7791  0.000 -0.7791  1000. -1000. 27*0.5
   14       BOX TYPE  5
   16       CUBOID  1   3.810  -3.810   3.810  -3.810   1000. -1000. 27*0.5
   16       CUBOID  3  6.5075 -6.5075  6.5075 -6.5075   1000. -1000. 27*0.5
   14       BOX TYPE  6
   15       CUBOID  2  0.000 -13.015  0.1441  0.000   1000. -1000. 27*0.5
   15       CUBOID  4  0.000 -13.015  0.7791  0.000   1000. -1000. 27*0.5
   14       BOX TYPE  7
   15       CUBOID  2  0.000 -0.1441  13.015  0.000   1000. -1000. 27*0.5
   15       CUBOID  4  0.000 -0.7791  13.015  0.000   1000. -1000. 27*0.5
   14       BOX TYPE  8
   14       CUBOID  4   0.635  0.000   0.000 -0.635   1000. -1000. 27*0.5
   14       CUBOID  2   0.7791 0.000   0.000 -0.7791  1000. -1000. 27*0.5
   16       CORE BDY  0  13.7941 -13.7941 13.7941 0.00 1000. -1000. 27*0.5
   17       ZHEMICYL+Y  3  19.509 1000. -1000. 27*0.5
   17       ZHEMICYL+Y  4  19.600 1000. -1000. 27*0.5
   14       ZHEMICYL+Y  7  25.309 1000. -1000. 27*0.5
   14       ZHEMICYL+Y  6  30.706 1000.  -1000.  27*0.5
   14       ZHEMICYL+Y  4  32.93 1000. -1000. 27*0.5
   14       ZHEMICYL+Y  3  45.629  1000.  -1000.  27*0.5
   14       ZHEMICYL+Y  4  46.264  1000.  -1000.  27*0.5
   14       CUBOID  3  63. -63. 63. 0.00 1000. -1000. 27*0.5
   14       1  4 4 1  2 2 1  1 1 1  0
   14       2  4 4 1  1 1 1  1 1 1  0
   14       3  3 3 1  2 2 1  1 1 1  0
   14       4  3 3 1  1 1 1  1 1 1  0
   14       5  1 1 1  2 2 1  1 1 1  0
   14       6  1 1 1  1 1 1  1 1 1  0
   14       7  2 2 1  2 2 1  1 1 1  0
   14       8  2 2 1  1 1 1  1 1 1  1
   14       END KENO.

ORS: NONE. TIME:  0.526 SEC. IMAGE COUNT: 53
```

Page Added
Oct. 1990

```
 FOUR ASBL BASKET FOR FERMI-1 FUEL, .040 BORON
NUMBER OF GENERATIONS                    56                    START TYPE
NUMBER PER GENERATION                   403                    GENERATIONS BE
NUMBER OF GENERATIONS TO BE SKIPPED       5                    LIST INPUT X-S
NUMBER OF ENERGY GROUPS                  27                    LIST 1-D MIXTU
MAX. NUMBER OF ENERGY TRANSFERS          27                    LIST 2-D MIXTU
NUMBER OF INPUT NUCLIDES                 17                    LIST FISS. AND
NUMBER OF MIXTURES                        7                    USE X-SECTIONS
NUMBER OF MIXING TABLE ENTRIES           15                    USE GEOMETRY F
NUMBER OF GEOMETRY CARDS                 25                    USE VELOCITIES
NUMBER OF BOX TYPES                       8                    COMPUTE MATRIX
NUMBER OF UNITS IN X DIRECTION            4                    COMPUTE MATRIX
NUMBER OF UNITS IN Y DIRECTION            2                    LIST FISS PROB
NUMBER OF UNITS IN Z DIRECTION            1                    ADJOINT CALCUL
NUMBER OF NUCLIDES READ FROM TAPE       -17                    USE EXPONENTIA
ALBEDO TYPE                               1                    CALCULATE FLUX
SEARCH TYPE                               0                    CALCULATE FISS
THIS PROBLEM WILL BE RUN WITH SPECULARLY REFLECTING BOUNDARY CONDITION
THE ALBEDOS ARE +X = 1.00000+000 -X =  .00000     +Y =  .00000     -Y = 1.00000+
MAXIMUM TIME = 200.0000 MINUTES
STORAGE LOCATIONS REQUIRED FOR THIS JOB =     24763
REMAINING AVAILABLE LOCATIONS=    375237
```


Page Added
Oct. 1990

```
FOUR ASBL BASKET FOR FERMI-1 FUEL, .040 30R04

    MIXTURE   NUCLIDE    DENSITY
       1      -92235    2.73620-003
       1       92238    7.84910-003
       1       42000    2.91000-003
       1       40000    1.58060-003
       1      555011    4.65150-002
       1      555081    2.32580-002
       2        5010    8.36100-003
       2        6012    1.08300-002
       2       13027    3.01300-002
       3        8016    3.34610-002
       3        1001    6.69220-002
       4       24000    1.83900-002
       4       28000    1.81500-003
       4       26000    5.99400-002
       5       13027    6.02600-002
       6       82000    3.29900-002
       7      592238    4.77300-002
       7     -592235    1.05200-004


CROSS SECTIONS READ FROM TAPE

NUCLIDE =        1001   H 1269 F, 1002 T 218 GP 032475(2)
NUCLIDE =      555011   H 1269 F, 1002 T 218 GP 032475(2)
NUCLIDE =        5010   B-10 1273 218NGP 042375 P-3 293K
NUCLIDE =        6012   C-12 1274F,1065T 218 GP 030476(7)
NUCLIDE =        8016   O-16 1276 218 GP 030476(7)
NUCLIDE =      555081   O-16 1276 218 GP 030476(7)
NUCLIDE =       13027   AL-27 1193 218 GP 040375(5)
NUCLIDE =       24000   CR 1191 218NGP WT 1/E P-3 293K SIGP=5+4 RE(042375)
NUCLIDE =       26000   FE 218GP RE 5-17-78(1)
NUCLIDE =       28000   NI 1190 218NGP WT 1/E P-3 293K SIGP=5+4 RE(042375)
NUCLIDE =       40000   ZR(NAT) 7141 21 NGP WT FIS(0.1T020)-1/E-MAX P-3
NUCLIDE =       42000   MO (1287) SIGP=5+4 NEWXLACS 218NGP F-1/E-M P-3 293K
NUCLIDE =       82000   PB    1288 218NGP 042375 P-3 293K
NUCLIDE =       92235   U-235 1261 SIGP=5+4 NEWXLACS 218NGP P-3 293K(3)
NUCLIDE =      592235   U-235 1261 SIGP=5+4 NEWXLACS 218NGP P-3 293K(3)
NUCLIDE =       92238   U-238 218GP RE 5-17-78(1)
NUCLIDE =      592238   U-238 218GP RE 5-17-78(1)
```

```
 FOUR ASBL BASKET FOR FERMI-1 FUEL, .040 BORON

ARRAY DESCRIPTION
Z =     1

  5   7   3   1

  6   8   4   2
```

KENO - FERMI 1 NORMAL OPERATION (Continued)

FOUR ASBL BASKET FOR FERMI-1 FUEL, .040 BORON

LIFETIME = 9.71350-005 + OR - 1.02707-006 GENERATION TIME = 4.07517

NO. OF INITIAL GENERATIONS SKIPPED	AVERAGE K-EFFECTIVE	DEVIATION	67 PER CENT CONFIDENCE INTERVAL	95 PER CONFIDENCE
6	.80637	+ OR - .00480	.80158 TO .81117	.79678 TO
7	.80684	+ OR - .00487	.80197 TO .81171	.79710 TO
8	.80659	+ OR - .00497	.80162 TO .81156	.79666 TO
9	.80613	+ OR - .00505	.80108 TO .81118	.79603 TO
10	.80702	+ OR - .00508	.80193 TO .81210	.79685 TO
11	.80606	+ OR - .00510	.80096 TO .81117	.79585 TO
12	.80641	+ OR - .00521	.80120 TO .81162	.79599 TO
13	.80763	+ OR - .00518	.80245 TO .81281	.79726
14	.80725	+ OR - .00529	.80196 TO .81255	.79666 TO
15	.80831	+ OR - .00532	.80300 TO .81363	.79768 TO
20	.80765	+ OR - .00533	.80232 TO .81299	.79699 TO
25	.80640	+ OR - .00599	.80041 TO .81238	.79442 TO
30	.80738	+ OR - .00695	.80043 TO .81434	.79348 TO
35	.80975	+ OR - .00740	.80235 TO .81716	.79494 TO
40	.81444	+ OR - .00900	.80544 TO .82344	.79644 TO
45	.80389	+ OR - .01150	.79238 TO .81539	.78088 TO
50	.80858	+ OR - .01406	.79451 TO .82264	.78045 TO

Page Added
Oct. 1990

KENO - FERMI-1 - NO MODERATOR

```
.KB040FER1
17/86 15:55:52 (19)
      FOUR ASBL BASKET FOR FERMI-1 FUEL, .040 BORON, NO MODERATOR IN FUEL
      200. 56 403 6 27 27 17 7 18 25 8 4 2 1 -17 1 0 2000 0 1 82
      -1 0 0 3R-1
      1  -92235 2.7362-3  1  92238 7.8491-3  1  42000 2.910-3
      1   40000 1.5806-3  1  555011 1.-15   1  555081  1.-15
      2   5010 8.361-3  2  6012 1.083-2  2  13027 3.013-2
      3    8016 3.3461-2  3   1001 6.6922-2
      4   24000 1.839-2  4  28000 1.815-3  4  26000 5.994-2
      5   13027 6.026-2
      6   82000 3.299-2
      7   592238 4.773-2  7   -592235 1.052-4
      BOX TYPE  1
      CUBOID  1   3.810  -3.810   3.810  -3.810   1000. -1000. 27*0.5
      CUBOID  3  6.5075 -6.5075  6.5075 -6.5075   1000. -1000. 27*0.5
      BOX TYPE  2
      CUBOID  2  13.015  0.000  0.1441  0.000   1000. -1000. 27*0.5
      CUBOID  4  13.015  0.000  0.7791  0.000   1000. -1000. 27*0.5
      BOX TYPE  3
      CUBOID  2  0.1441  0.000  13.015  0.000   1000. -1000. 27*0.5
      CUBOID  4  0.7791  0.000  13.015  0.000   1000. -1000. 27*0.5
      BOX TYPE  4
      CUBOID  4   0.000 -0.635   0.000 -0.635   1000. -1000. 27*0.5
      CUBOID  2   0.000 -0.7791  0.000 -0.7791  1000. -1000. 27*0.5
      BOX TYPE  5
      CUBOID  1   3.810  -3.810   3.810  -3.810   1000. -1000. 27*0.5
      CUBOID  3  6.5075 -6.5075  6.5075 -6.5075   1000. -1000. 27*0.5
      BOX TYPE  6
      CUBOID  2  0.000 -13.015  0.1441  0.000   1000. -1000. 27*0.5
      CUBOID  4  0.000 -13.015  0.7791  0.000   1000. -1000. 27*0.5
      BOX TYPE  7
      CUBOID  2  0.000 -0.1441  13.015  0.000   1000. -1000. 27*0.5
      CUBOID  4  0.000 -0.7791  13.015  0.000   1000. -1000. 27*0.5
      BOX TYPE  8
      CUBOID  4   0.635  0.000   0.000 -0.635   1000. -1000. 27*0.5
      CUBOID  2   0.7791 0.000   0.000 -0.7791  1000. -1000. 27*0.5
      CORE BDY  C  13.7941 -13.7941 13.7941 0.00 1000. -1000. 27*0.5
      ZHEMICYL+Y  3  19.509 1000. -1000. 27*0.5
      ZHEMICYL+Y  4  19.600 1000. -1000. 27*0.5
      ZHEMICYL+Y  7  25.309 1000. -1000. 27*0.5
      ZHEMICYL+Y  6  30.706 1000.  -1000.  27*0.5
      ZHEMICYL+Y  4  32.93 1000. -1000. 27*0.5
      ZHEMICYL+Y  3  45.629  1000.  -1000.  27*0.5
      ZHEMICYL+Y  4  46.264  1000.  -1000.  27*0.5
      CUBOID  3  63. -63. 63. 0.00 1000. -1000. 27*0.5
      1  4 4 1  2 2 1  1 1 1  0
      2  4 4 1  1 1 1  1 1 1  0
      3  3 3 1  2 2 1  1 1 1  0
      4  3 3 1  1 1 1  1 1 1  0
      5  1 1 1  2 2 1  1 1 1  0
      6  1 1 1  1 1 1  1 1 1  0
      7  2 2 1  2 2 1  1 1 1  0
      8  2 2 1  1 1 1  1 1 1  1
      END KENO.

NONE. TIME:  0.531 SEC. IMAGE COUNT: 53
```

NO WATER IN FUEL

Page Added
Oct. 1990

KENO - FERMI-1 - NO MODERATOR (Continued)

FOUR ASBL BASKET FOR FERMI-1 FUEL, .040 BORON, NO MODERATOR IN FUEL

LIFETIME = 1.12881-004 + OR - 1.16662-006 GENERATION TIME = 5.35320-

NO. OF INITIAL GENERATIONS SKIPPED	AVERAGE K-EFFECTIVE		DEVIATION	67 PER CENT CONFIDENCE INTERVAL		95 PER C CONFIDENCE I
6	.65500	+ OR -	.00477	.65023 TO	.65977	.64546 TO
7	.65515	+ OR -	.00486	.65029 TO	.66002	.64542 TO
8	.65463	+ OR -	.00494	.64969 TO	.65957	.64475 TO
9	.65521	+ OR -	.00501	.65020 TO	.66022	.64519 TO
10	.65415	+ OR -	.00500	.64915 TO	.65916	.64414 TO
11	.65294	+ OR -	.00496	.64797 TO	.65790	.64301 TO
12	.65205	+ OR -	.00500	.64706 TO	.65705	.64206 TO
13	.65338	+ OR -	.00493	.64845 TO	.65831	.64352 TO
14	.65180	+ OR -	.00478	.64702 TO	.65658	.64224 T
15	.65266	+ OR -	.00482	.64784 TO	.65748	.64302 TO
20	.65525	+ OR -	.00513	.65012 TO	.66038	.64499 TO
25	.65111	+ OR -	.00557	.64554 TO	.65667	.63997 TO
30	.64524	+ OR -	.00524	.64000 TO	.65048	.63476 TO
35	.64595	+ OR -	.00534	.64061 TO	.65129	.63527 TO
40	.64900	+ OR -	.00665	.64236 TO	.65565	.63571 TO
45	.65082	+ OR -	.00803	.64279 TO	.65885	.63476 TO
50	.64331	+ OR -	.01152	.63179 TO	.65482	.62027 TO

Page Added
Oct. 1990

```
0.KB030FER                KENO - FERMI-1 BORON SENSITIVITY
/17/86 20:13:12 (0)
00        FOUR ASBL BASKET FOR FERMI-1 FUEL, .030 BORON
00       200. 50 403 6 27 27 17 7 18 25 8 4 2 1 -17 1 0 2000 0 1 8z
00       -1 0 0 3R-1
00       1  -92235 2.180-3  1  92238 6.124-3  1  42000 2.286-3
00       1   40000 1.242-3  1  555011 5.089-2   1  555081  2.545-2
00       2   5010 6.271-3  2  6012 1.083-2  2  13027 3.013-2
00       3    8016 3.3461-2  3   1001 6.6922-2
00       4   24000 1.839-2  4  28000 1.815-3  4  26000 5.994-2
00       5   13027 6.026-2
00       6   82000 3.299-2
00       7   592238 4.773-2  7   -592235 1.052-4
00       BOX TYPE  1
00       CUBOID  1   7.620  0.000   7.620  0.000   1000. -1000. 27*0.5
00       CUBOID  3  10.160  -2.54  10.160  -2.54   1000. -1000. 27*0.5
00       BOX TYPE  2
00       CUBOID  2  11.438  0.000  0.1441  0.000   1000. -1000. 27*0.5
00       CUBOID  4  12.700  0.000  0.7791  0.000   1000. -1000. 27*0.5
00       BOX TYPE  3
00       CUBOID  2  0.1441  0.000  11.438  0.000   1000. -1000. 27*0.5
00       CUBOID  4  0.7791  0.000  12.700  0.000   1000. -1000. 27*0.5
00       BOX TYPE  4
00       CUBOID  4   0.000 -0.635   0.000 -0.635   1000. -1000. 27*0.5
00       CUBOID  2   0.000 -0.7791  0.000 -0.7791  1000. -1000. 27*0.5
00       BOX TYPE  5
00       CUBOID  1   7.620  0.000   7.620  0.000   1000. -1000. 27*0.5
00       CUBOID  3  10.160  -2.54  10.160  -2.54   1000. -1000. 27*0.5
00       BOX TYPE  6
00       CUBOID  2  0.000 -11.438  0.1441  0.000   1000. -1000. 27*0.5
00       CUBOID  4  0.000 -12.700  0.7791  0.000   1000. -1000. 27*0.5
00       BOX TYPE  7
00       CUBOID  2  0.000 -0.1441  11.438  0.000   1000. -1000. 27*0.5
00       CUBOID  4  0.000 -0.7791  12.700  0.000   1000. -1000. 27*0.5
00       BOX TYPE  8
00       CUBOID  4   0.635  0.000   0.000 -0.635   1000. -1000. 27*0.5
00       CUBOID  2   0.7791 0.000   0.000 -0.7791  1000. -1000. 27*0.5
00       CORE BDY  0  13.4791 -13.4791 13.4791 0.00 1000. -1000. 27*0.5
00       ZHEMICYL+Y  3  19.326 1000. -1000. 27*0.5
00       ZHEMICYL+Y  4  19.394 1000. -1000. 27*0.5
00       ZHEMICYL+Y  7  25.309 1000. -1000. 27*0.5
00       ZHEMICYL+Y  6  30.706 1000.  -1000.  27*0.5
00       ZHEMICYL+Y  4  32.93 1000. -1000. 27*0.5
00       ZHEMICYL+Y  3  45.629  1000.  -1000.  27*0.5
00       ZHEMICYL+Y  4  46.264  1000.  -1000.  27*0.5
00       CUBOID  3  63. -63. 63. 0.00 1000. -1000. 27*0.5
00       1  4 4 1  2 2 1  1 1 1  0
00       2  4 4 1  1 1 1  1 1 1  0
00       3  3 3 1  2 2 1  1 1 1  0
00       4  3 3 1  1 1 1  1 1 1  0
00       5  1 1 1  2 2 1  1 1 1  0
00       6  1 1 1  1 1 1  1 1 1  0
00       7  2 2 1  2 2 1  1 1 1  0
00       8  2 2 1  1 1 1  1 1 1  1
00       END KENO.

: NONE. TIME:  0.402 SEC. IMAGE COUNT: 53
```


Page Added
Oct. 1990

KENO - FERMI-1 BORON SENSITIVITY (Continued)

FOUR ASBL BASKET FOR FERMI-1 FUEL, .030 BORON

LIFETIME = 1.02514-004 + OR - 1.13177-006 GENERATION TIME = 4.32614-

NO. OF INITIAL GENERATIONS SKIPPED	AVERAGE K-EFFECTIVE	DEVIATION	67 PER CENT CONFIDENCE INTERVAL	95 PER CONFIDENCE
6	.81949	+ OR - .00492	.81457 TO .82441	.80965 TO
7	.82057	+ OR - .00491	.81565 TO .82548	.81074 TO
8	.82040	+ OR - .00503	.81537 TO .82543	.81034 TO
9	.81883	+ OR - .00489	.81393 TO .82372	.80904 TO
10	.81780	+ OR - .00491	.81289 TO .82270	.80799 TO
11	.81714	+ OR - .00499	.81215 TO .82212	.80716 TO
12	.81782	+ OR - .00507	.81275 TO .82289	.80768 TO
13	.81746	+ OR - .00520	.81226 TO .82266	.80707
14	.81727	+ OR - .00534	.81193 TO .82261	.80659 TO
15	.81605	+ OR - .00535	.81070 TO .82140	.80535 TO
20	.81514	+ OR - .00573	.80941 TO .82087	.80368 TO
25	.81403	+ OR - .00505	.80898 TO .81908	.80393 TO
30	.81795	+ OR - .00497	.81297 TO .82292	.80800 TO
35	.81894	+ OR - .00602	.81292 TO .82496	.80690 TO
40	.82306	+ OR - .00839	.81467 TO .83145	.80627 TO
45	.81852	+ OR - .00593	.81259 TO .82445	.80666 TO

Page Added
Oct. 1990

NITAWL - FERMI-1 HYPOTHETICAL ACCIDENT

```
:CC4*KENO.N27HA
:74Q1C C7/16/86 12:37:01 (24)
        20      1SS 0 17 5Z 2 2Z -1 0 T
        20      2SS 92238 -592238 92235 -592235 8016 -555081  1001 -555011 13027
        20          40000 24000 28000 26000 82000 5010 6012 42000
        24      3** 92238 294. 2 .1880 .1741 92.06 2.932-2 1 96 2.22 1 3Z 1.0
        20          592238 294. 0 0.0 0.00 20.0 4.773-2 1 3Z 3Z 1.0 T

  ERRORS: NONE. TIME:  0.253 SEC. IMAGE COUNT: 5


.RED - IN CONTROL MODE


.CC*NITAWL.NITAWL
```


Page Added
Oct. 1990

```
THIS XSDRN WORKING TAPE WAS CREATED
THE TITLE OF THE PARENT CASE IS AS FOLLOWS
27 NEUTRON GROUP LIBRARY
   BASED ON ENDF/B VERSION 4 DATA
    COMPILED FOR NRC
    TAPE ID                                  4321          NUMBER OF NUCLIDES
    NUMBER OF NEUTRON GROUPS                   27          NUMBER OF GAMMA GROUPS
    FIRST THERMAL GROUP                        15
                                        TABLE OF CONTENTS
  H 1269 F, 1002 T 218 GP 032475(2)
  H 1269 F, 1002 T 218 GP 032475(2)
  B-10 1273 218NGP 042375 P-3 293K
  C-12 1274F,1065T 218 GP 030476(7)
  O-16 1276 218 GP 030476(7)
  O-16 1276 218 GP 030476(7)
  AL-27 1193 218 GP 040375(5)
  CR 1191 218NGP WT 1/E P-3 293K SIGP=5+4 RE(042375)
  FE 218GP RE 5-17-78(1)
  NI 1190 218NGP WT 1/E P-3 293K SIGP=5+4 RE(042375)
  ZR(NAT) 7141 21 NGP WT FIS(0.1T020)-1/E-MAX P-3
  MO (1287) SIGP=5+4 NEWXLACS 218NGP F-1/E-M P-3 293K
  PB   1288 218NGP 042375 P-3 293K
  U-235 1261 SIGP=5+4 NEWXLACS 218NGP P-3 293K(3)
  U-235 1261 SIGP=5+4 NEWXLACS 218NGP P-3 293K(3)
  U-238 218GP RE 5-17-78(1)
  U-238 218GP RE 5-17-78(1)

.PT PRINTS
```

XSDRNPM - FERMI-1 HYPOTHETICAL ACCIDENT

```
*KENO.X27HA
 07/16/86 13:38:10 (22)
   21       XSDRNPM FOR FERMI-1 METAL FUEL, HYPOTHETICAL ACCIDENT, .356 CM PITCH
   18       1SS 2 3 20 1 3 3 39 8 3 1 2R10 F0
   18       2SS -2 F0
   18       3SS 1 3Z 1000 2Z 1 F0
   18       4SS -1 27 0 -2 E T
   18       13SS 3R1 2 2R3 11R1 11R2 11R3
   18       14SS 92235 92238 42000 40000 555081 555011
   18            8016 1001 82000 24000 28000 26000
   18             13027 5010 6012  592238 592235 2011
   22       15** 1.0218-2 2.932-2 1.087-2 4.227-2 3.3461-2 6.6922-2 F1.-15 T
   18       33** F1.0 T
   21       35** 910.0 .188 .189 71.2007 .4830
   18       36SS 10R1 2R2 8R3
   18       38** 10R1.0 0.0 F1.0
   18       39SS 1 2 3
   18       40SS F3
   18       51SS 1 2 3 4 5 6 7 8 9 10 11 12 13 14 15 16 17
   18           18 19 20 21 22 23 24 25 26 27 T

RS: NONE. TIME:  0.229 SEC. IMAGE COUNT: 18

DRNPM.XSDRNPM
```


Page Added
Oct. 1990

```
GADD,DEP 998CC4*KENO.X27HA
                                XSDRNPM FOR FERMI-1 METAL FUEL, HYPOTHETICAL ACCIDEN

    1S ARRAY      15 ENTRIES READ

    2S ARRAY      10 ENTRIES READ

    3S ARRAY      12 ENTRIES READ

    4S ARRAY       9 ENTRIES READ

    CT

DIRECT ACCESS FILES ASSIGNED
  3000 WORDS PER RECORD ON UNIT 8          1 PHYSICAL RECORDS PER LOGICAL
   820 WORDS PER RECORD ON UNIT 9         10 PHYSICAL RECORDS PER LOGICAL
  3000 WORDS PER RECORD ON UNIT 10          1 PHYSICAL RECORDS PER LOGICAL

GENERAL PROBLEM DESCRIPTION DATA BLOCK

                                GENERAL PROBLEM DATA

IGE   1/2/3 = PLANE/CYLINDER/SPHERE        2        ISN   QUADRATURE ORDER
IZM   NUMBER OF ZONES                      3        ISCT  ORDER OF SCATTERING
IM    NUMBER OF SPACIAL INTERVALS         20        IEVT  0/1/2/3/4/5/6=B/K/ALPHA/
IBL   0/1/2/3 = VACUUM/REFL/PER/WHITE      1        IIM   INNER ITERATION MAXI
IBR   RIGHT BOUNDARY CONDITION             3        ICM   OUTER ITERATION MAXI
MXX   NUMBER OF MIXTURES                   3        ICLC  -1/0/N--FLAT RES/SN/OPT
MS    MIXING TABLE LENGTH                 39        ITH   0/1 = FORWARD/ADJOINT
IGM   NUMBER OF ENERGY GROUPS             27        IFLU  0/1/2/3/4=L-S/L/S/W/L-W
NNG   NUMBER OF NEUTRON GROUPS            27        IPRT  -2/-1/0/N=MIXTURE XSEC P
NGG   NUMBER OF GAMMA GROUPS               0        ID1   0/1/2/3=NO/PRT ND/PCH N/
IFTG  NUMBER OF FIRST THERMAL GROUP       15        IPBT  -1/0/1=NONE/FINE/ALL BAL

                                SPECIAL OPTIONS

IFG   0/1 = NONE/WEIGHTING CALCULATION     1        IPN   DUMMY PARAMETER
IGM   VOLUMETRIC SOURCES (0/N=NO/YES)      0        IDFM  0/1 = NONE/DENSITY FACTO
IPM   BOUNDARY SOURCES (0/N=NO/YES)        0        IAZ   0/N = NONE/N ACTIVITIES
IFN   0/1/2 = INPUT 33*/34*/USE LAST       0        IAI   0/1=NONE/ACTIVITIES BY I
ITMX  MAXIMUM TIME (MINUTES)            1000        IFCT  0/1=NO/YES UPSCATTER SCA
IDT1  0/1/2/3=NO/XSECT/SRCE/FLUX--OUT      0        IPVT  0/1/2=NO/K/ALPHA PARAMET

                                WEIGHTING DATA (IFG=1)

ICON  -1/0/1=CELL/ZONE/REGION WEIGHT      -1        IHTF  TOTAL XSECT PSN IN BRD G
IGMF  NUMBER OF BROAD GROUPS              27        NDSF  PSN G-G OR FILE NUMBER
ITP   0/10/20/30/40 U/C/E/AC/A             0        NUSF  TABLE LENGTH OR MAX ORDE
IPP   -2/-1/0/N=WGTED XSECT PRINT         -2        MSCM  EXTRA 1-D X-SECT POSITIC
IAP   -1/N ANISN XSECT PRINT              -1

                                FLOATING POINT PARAMETERS
```

Page Added
Oct. 1990

XSDRNPM FOR FERMI-1 METAL FUEL, HYPOTHETICAL ACCIDENT, .8

133 ARRAY 39 ENTRIES READ

143 ARRAY 39 ENTRIES READ

15* ARRAY 39 ENTRIES READ

2T

DATA BLOCK 2 (MIXING TABLE, ETC.)

NUCLIDES ON TAPE	CCCC IDENTIFICATION	MIXTURE	MIXING TABLE COMPONENT	ATOM DENSITY
1 1001		1	92235	.10218-001
2 555011		1	92238	.29320-001
3 5010		1	42000	.10870-001
4 6012		2	40000	.42270-001
5 8016		3	555081	.33461-001
6 555081		3	555011	.66922-001
7 13027		1	8016	.10000-014
8 24000		1	1001	.10000-014
9 26000		1	82000	.10000-014
10 28000		1	24000	.10000-014
11 40000		1	28000	.10000-014
12 42000		1	26000	.10000-014
13 82000		1	13027	.10000-014
14 92235		1	5010	.10000-014
15 592235		1	6012	.10000-014
16 92238		1	592238	.10000-014
17 592238		1	592235	.10000-014
18 592238		2	8016	.10000-014
19 592238		2	1001	.10000-014
20 592238		2	82000	.10000-014
21 592238		2	24000	.10000-014
22 592238		2	28000	.10000-014
23 592238		2	26000	.10000-014
24 592238		2	13027	.10000-014
25 592238		2	5010	.10000-014
26 592238		2	6012	.10000-014
27 592238		2	592238	.10000-014
28 592238		2	592235	.10000-014
29 592238		3	8016	.10000-014
30 592238		3	1001	.10000-014
31 592238		3	82000	.10000-014
32 592238		3	24000	.10000-014
33 592238		3	28000	.10000-014
34 592238		3	26000	.10000-014
35 592238		3	13027	.10000-014
36 592238		3	5010	.10000-014
37 592238		3	6012	.10000-014
38 592238		3	592238	.10000-014
39 592238		3	592235	.10000-014

FINISHED MIXING CROSS SECTIONS
ELAPSED TIME .00000000 MIN.

Page Added
Oct. 1990

```
.RP.  22 REQUIRED   1 ITERATIONS. MFD OF  7.12005-006 OCCURRED IN INT.  20  COAF
:RP.  23 REQUIRED   1 ITERATIONS. MFD OF  6.49970-006 OCCURRED IN INT.  17  COAF
:RP.  24 REQUIRED   1 ITERATIONS. MFD OF  1.56342-005 OCCURRED IN INT.   2  COAF
:RP.  25 REQUIRED   1 ITERATIONS. MFD OF  2.46674-005 OCCURRED IN INT.  20  COAF
.RP.  26 REQUIRED   1 ITERATIONS. MFD OF  1.36202-005 OCCURRED IN INT.  20  COAF
:RP.  27 REQUIRED   1 ITERATIONS. MFD OF  2.16312-005 OCCURRED IN INT.  20  COAF
    9   970   1.0000015+000   1.0000419+000   1.6506742+000   1.0000723+000   1.
        FINAL MINITOR          LAMBDA  1.6506527+000          ANGULAR FLUX ON
 ELAPSED TIME    7.58923328 MIN.
```

Page Added
Oct. 1990

```
.0.KBC40FERHA
'/16/86 13:48:35 (29)
25       FERMI-1 FOUR ASBL BASKET , .040 BORON, H.A.
28      200. 56 603 6 27 27 17 7 18 27 8 4 2 1 -17 1 0 2000 0 1 8Z
25      3Z 3R-1
29      1  -92235 1.5484-3  1  92238 4.4430-3  1  42000 1.6472-3
25      1   40000 3.9465-4  1  555011 5.5379-2   1  555081  2.7690-2
25      2   5010 8.361-3  2  6012 1.083-2  2  13027 3.013-2
25      3    8016 3.3461-2  3   1001 6.6922-2
25      4   24000 1.839-2  4  28000 1.815-3  4  26000 5.994-2
25      5   13027 6.026-2
25      6   82000 3.299-2
25      7   592238 4.773-2  7   -592235 1.052-4
25      BOX TYPE  1
25      CYLINDER  1  5.715  38.735 -38.735  27*0.5
25      CYLINDER  5  6.350  38.735 -38.735  27*0.5
27      CUBOID  3  6.5075   -6.5075  6.5075   -6.5075    46.507 -46.507 27*0.5
25      BOX TYPE  2
26      CUBOID  2  13.015  0.000  0.1441  0.000   46.507 -46.507 27*0.5
25      CUBOID  4  13.015  0.000  0.7791  0.000   46.507 -46.507 27*0.5
25      BOX TYPE  3
26      CUBOID  2  0.1441  0.000  13.015  0.000   46.507 -46.507 27*0.5
25      CUBOID  4  0.7791  0.000  13.015  0.000   46.507 -46.507 27*0.5
25      BOX TYPE  4
25      CUBOID  4   0.000 -0.635   0.000 -0.635   46.507 -46.507 27*0.5
25      CUBOID  2   0.000 -0.7791  0.000 -0.7791  46.507 -46.507 27*0.5
25      BOX TYPE  5
25      CYLINDER  1  5.715  38.735 -38.735  27*0.5
25      CYLINDER  5  6.350  38.735 -38.735  27*0.5
27      CUBOID  3  6.5075  -6.5075  6.5075   -6.5075   46.507 -46.507 27*0.5
25      BOX TYPE  6
26      CUBOID  2  0.000 -13.015  0.1441  0.000   46.507 -46.507 27*0.5
25      CUBOID  4  0.000 -13.015  0.7791  0.000   46.507 -46.507 27*0.5
25      BOX TYPE  7
26      CUBOID  2  0.000 -0.1441  13.015  0.000   46.507 -46.507 27*0.5
25      CUBOID  4  0.000 -0.7791  13.015  0.000   46.507 -46.507 27*0.5
25      BOX TYPE  8
25      CUBOID  4   0.635  0.000   0.000 -0.635   46.507 -46.507 27*0.5
25      CUBOID  2   0.7791 0.000   0.000 -0.7791  46.507 -46.507 27*0.5
25      CORE BDY  0  13.7941 -13.7941 13.7941 0.00 46.507 -46.507 27*0.5
25      ZHEMICYL+Y  3  19.509 46.507 -46.507 27*0.5
25      ZHEMICYL+Y  4  19.600 46.507 -46.507 27*0.5
25      ZHEMICYL+Y  7  25.309 46.507 -46.507 27*0.5
25      ZHEMICYL+Y  6  30.706 46.507  -46.507  27*0.5
25      ZHEMICYL+Y  4  32.93 46.507 -46.507 27*0.5
25      ZHEMICYL+Y  3  45.629  46.507  -46.507  27*0.5
25      ZHEMICYL+Y  4  46.264  46.507  -46.507  27*0.5
25      CUBOID  3  63. -63. 63. 0.00 46.507 -46.507 27*0.5
25      1  4 4 1  2 2 1  1 1 1  0
25      2  4 4 1  1 1 1  1 1 1  0
25      3  3 3 1  2 2 1  1 1 1  0
25      4  3 3 1  1 1 1  1 1 1  0
25      5  1 1 1  2 2 1  1 1 1  0
25      6  1 1 1  1 1 1  1 1 1  0
25      7  2 2 1  2 2 1  1 1 1  0
25      8  2 2 1  1 1 1  1 1 1  1
25      END KENO.
```


Page Added
Oct. 1990

```
 FERMI-1 FOUR ASB. BASKET , .040 BORON, H.A.
NUMBER OF GENERATIONS                    55                    START TYPE
NUMBER PER GENERATION                   303                    GENERATIONS BE
NUMBER OF GENERATIONS TO BE SKIPPED       5                    LIST INPUT X-S
NUMBER OF ENERGY GROUPS                  27                    LIST 1-D MIXTU
MAX. NUMBER OF ENERGY TRANSFERS          27                    LIST 2-D MIXTU
NUMBER OF INPUT NUCLIDES                 17                    LIST FISS. AND
NUMBER OF MIXTURES                        7                    USE X-SECTIONS
NUMBER OF MIXING TABLE ENTRIES           13                    USE GEOMETRY F
NUMBER OF GEOMETRY CARDS                 27                    USE VELOCITIES
NUMBER OF BOX TYPES                       3                    COMPUTE MATRIX
NUMBER OF UNITS IN X DIRECTION            4                    COMPUTE MATRIX
NUMBER OF UNITS IN Y DIRECTION            2                    LIST FISS B
NUMBER OF UNITS IN Z DIRECTION            1                    ADJOINT CALCUL
NUMBER OF NUCLIDES READ FROM TAPE       -17                    USE EXPONENTIA
ALBEDO TYPE                               1                    CALCULATE FLUX
SEARCH TYPE                               3                    CALCULATE FISS
THIS PROBLEM WILL BE RUN WITH SPECULARLY REFLECTING BOUNDARY CONDITION .
THE ALBEDOS ARE +X =  .00000     -X =  .00000     +Y =  .00000     -Y = 1.00000+
MAXIMUM TIME = 200.0000 MINUTES

STORAGE LOCATIONS REQUIRED FOR THIS JOB =     25331
REMAINING AVAILABLE LOCATIONS=    371669
```

Page Added
Oct. 1990

FERMI-1 FOUR ASBL BASKET , .040 BORON, H.A.

MIXTURE	NUCLIDE	DENSITY
1	-92235	1.54840-003
1	92238	4.44300-003
1	42000	1.64720-003
1	40000	8.94650-004
1	555011	5.53790-002
1	555001	2.76900-002
2	5010	8.36100-003
2	6012	1.08300-002
2	13027	3.01300-002
2	8016	3.34610-002
3	1001	6.69220-002
4	24000	1.23900-002
4	28000	1.81500-003
4	26000	5.99400-002
5	13027	6.02600-002
6	82000	3.29900-002
7	592238	4.77300-002
7	-592235	1.05200-004

CROSS SECTIONS READ FROM TAPE

NUCLIDE =	1001	H 1269 F, 1002 T 218 GP 032475(2)
NUCLIDE =	555011	H 1269 F, 1002 T 218 GP 032475(2)
NUCLIDE =	5010	B-10 1273 218NGP 042375 P-3 293K
NUCLIDE =	6012	C-12 1274F,1065T 218 GP 030476(7)
NUCLIDE =	8016	O-16 1276 218 GP 030476(7)
NUCLIDE =	555001	O-16 1276 218 GP 030476(7)
NUCLIDE =	13027	AL-27 1193 218 GP 040375(5)
NUCLIDE =	24000	CR 1191 218NGP WT 1/E P-3 293K SIGP=5+4 RE(042375)
NUCLIDE =	26000	FE 218GP RE 5-17-78(1)
NUCLIDE =	28000	NI 1190 218NGP WT 1/E P-3 293K SIGP=5+4 RE(042375)
NUCLIDE =	40000	ZR(NAT) 7141 21 NGP WT FIS(0.1T020)-1/E-MAX P-3
NUCLIDE =	42000	MO (1257) SIGP=5+4 NEWXLACS 21SNGP F-1/E-M P-3 293K
NUCLIDE =	82000	PB 1288 218NGP 042375 P-3 293K
NUCLIDE =	92235	U-235 1261 SIGP=5+4 NEWXLACS 218NGP P-3 293K(3)
NUCLIDE =	592235	U-235 1261 SIGP=5+4 NEWXLACS 218NGP P-3 293K(3)
NUCLIDE =	92238	U-238 218GP RE 5-17-78(1)
NUCLIDE =	592238	U-238 218GP RE 5-17-78(1)

Page Added
Oct. 1990

```
 FERMI-1 FOUR ASBL BASKET , .040 BORON, H.A.

ARRAY DESCRIPTION
Z =      1

  5    7    3    1

  6    8    4    2
```

Page Added
Oct. 1990

KENO - FERMI-1 HYPOTHETICAL ACCIDENT (Continued)

FERMI-1 FOUR ASBL BASKET , .040 BORON, H.A.

LIFETIME = 8.32585-005 + OR - 8.71476-007 GENERATION TIME = 3.20629-

NO. OF INITIAL GENERATIONS SKIPPED	AVERAGE K-EFFECTIVE		DEVIATION	67 PER CENT CONFIDENCE INTERVAL		95 PER C CONFIDENCE I
6	.93720	+ OR -	.00397	.93323 TO	.94116	.92926 TO
7	.93691	+ OR -	.00404	.93287 TO	.94095	.92884 TO
8	.93732	+ OR -	.00410	.93322 TO	.94142	.92912 TO
9	.93675	+ OR -	.00415	.93260 TO	.94090	.92846 TO
10	.93624	+ OR -	.00421	.93204 TO	.94045	.92783 TO
11	.93628	+ OR -	.00430	.93198 TO	.94058	.92767 TO
12	.93618	+ OR -	.00440	.93178 TO	.94058	.92738 TO
13	.93622	+ OR -	.00450	.93171 TO	.94072	.92721 TO
14	.93562	+ OR -	.00457	.93104 TO	.94019	.92647 TO
15	.93601	+ OR -	.00467	.93134 TO	.94067	.92667 TO
20	.93703	+ OR -	.00515	.93188 TO	.94218	.92673 TO
25	.93900	+ OR -	.00557	.93342 TO	.94457	.92725 TO
30	.93907	+ OR -	.00651	.93255 TO	.94558	.92604 TO
35	.93310	+ OR -	.00738	.92573 TO	.94048	.91835 TO
40	.92873	+ OR -	.00815	.92058 TO	.93688	.91243 TO
45	.92694	+ OR -	.00943	.91750 TO	.93637	.90807 TO
50	.91873	+ OR -	.01109	.90763 TO	.92982	.89654 TO

Page Added
Oct. 1990

SECOND KENO RUN OF FERMI-1 HYPOTHETICAL ACCIDENT

```
.NO.KBU4UFERHA1
.7/16/36 20:44:42 (27)
27        FERMI-1 FOUR ASBL BASKET , .040 BORON, H.A.
27       200. 56 601 6 27 27 17 7 18 27 8 4 2 1 -17 1 3 2000 0 1 3Z
27       3Z 3R-1
27       1  -92235 1.5484-3  1  92238 6.4430-3  1  42000 1.6472-3
27       1   40000 8.9465-4  1  555011 5.5379-2  1  555081  2.7693-2
27       2   5010 8.361-3  2  6012 1.083-2  2  13027 3.013-2
27       3    8016 3.3461-2  3   1001 6.6922-2
27       4   24000 1.839-2  4  28000 1.815-3  4  26000 5.994-2
27       5   13027 6.026-2
27       6   82000 3.299-2
27       7   592238 4.773-2  7   -592235 1.052-4
27       BOX TYPE  1
27       CYLINDER  1  5.715  38.735 -38.735  27*0.5
27       CYLINDER  5  6.350  38.735 -38.735  27*0.5
27       CUBOID  3  6.5075   -6.5075  6.5075   -6.5075    46.507 -46.507 27*0.5
27       BOX TYPE  2
27       CUBOID  2  13.015  0.000  0.1441  0.000   46.507 -46.507 27*0.5
27       CUBOID  4  13.015  0.000  0.7791  0.000   46.507 -46.507 27*0.5
27       BOX TYPE  3
27       CUBOID  2  0.1441  0.000  13.015  0.000   46.507 -46.507 27*0.5
27       CUBOID  4  0.7791  0.000  13.015  0.000   46.307 -46.307 27*0.5
27       BOX TYPE  4
27       CUBOID  4   0.000 -0.635   0.000 -0.635   46.507 -46.507 27*0.5
27       CUBOID  2   0.000 -0.7791  0.000 -0.7791  46.507 -46.507 27*0.5
27       BOX TYPE  5
27       CYLINDER  1  5.715  33.735 -38.735  27*0.5
27       CYLINDER  5  6.350  38.735 -38.735  27*0.5
27       CUBOID  3  6.5075  -6.5075  6.5075   -6.5075   46.507 -46.507 27*0.5
27       BOX TYPE  6
27       CUBOID  2  0.000 -13.015  0.1441  0.000   46.507 -46.507 27*0.5
27       CUBOID  4  0.000 -13.015  0.7791  0.000   46.507 -46.507 27*0.5
27       BOX TYPE  7
27       CUBOID  2  0.000 -0.1441  13.015  0.000   46.507 -46.507 27*0.5
27       CUBOID  4  0.000 -0.7791  13.015  0.000   46.507 -46.507 27*0.5
27       BOX TYPE  8
27       CUBOID  4   0.635  0.000   0.000 -0.635   46.507 -46.507 27*0.5
27       CUBOID  2   0.7791 0.000   0.000 -0.7791  46.507 -46.507 27*0.5
27       CORE BDY  3  13.7941 -13.7941 13.7941 0.00 46.507 -46.507 27*0.5
27       ZHEMICYL+Y  3  19.509 46.507 -46.507 27*0.5
27       ZHEMICYL+Y  4  19.600 46.507 -46.507 27*0.5
27       ZHEMICYL+Y  7  25.309 46.507 -46.507 27*0.5
27       ZHEMICYL+Y  6  30.706 46.507  -46.507  27*0.5
27       ZHEMICYL+Y  4  32.93 46.507 -46.507 27*0.5
27       ZHEMICYL+Y  3  45.629  46.507  -46.507  27*0.5
27       ZHEMICYL+Y  4  46.264  46.507  -46.507  27*0.5
27       CUBOID  3  63. -63. 63. 0.00 46.507 -46.507 27*0.5
27       1  4 4 1  2 2 1  1 1 1  0
27       2  4 4 1  1 1 1  1 1 1  0
27       3  3 3 1  2 2 1  1 1 1  0
27       4  3 3 1  1 1 1  1 1 1  0
27       5  1 1 1  2 2 1  1 1 1  0
27       6  1 1 1  1 1 1  1 1 1  0
27       7  2 2 1  2 2 1  1 1 1  0
27       8  2 2 1  1 1 1  1 1 1  1
27       END KENO.
```

CHANGED RANDOM NUMBER SEQUENCE

Page Added
Oct. 1990

SECOND KENO RUN OF FERMI-1 HYPOTHETICAL ACCIDENT (Continued)

FERMI-1 FOUR ASBL BASKET , .040 BORON, H.A.

LIFETIME = 8.29094-005 + OR - 9.55835-007 GENERATION TIME = 3.18678-0

NO. OF INITIAL GENERATIONS SKIPPED	AVERAGE K-EFFECTIVE		DEVIATION	67 PER CENT CONFIDENCE INTERVAL		95 PER CE CONFIDENCE IN
6	.93662	+ OR -	.00313	.93350 TO	.93975	.93037 TO .
7	.93695	+ OR -	.00317	.93377 TO	.94012	.93060 TO .
8	.93610	+ OR -	.00312	.93298 TO	.93922	.92985 TO .
9	.93624	+ OR -	.00319	.93305 TO	.93942	.92986 TO .
10	.93654	+ OR -	.00324	.93330 TO	.93979	.93006 TO .
11	.93690	+ OR -	.00329	.93360 TO	.94019	.93031 TO .
12	.93715	+ OR -	.00336	.93379 TO	.94051	.93043 TO .
13	.93787	+ OR -	.00336	.93451 TO	.94123	.93115 TO .
14	.93835	+ OR -	.00341	.93494 TO	.94176	.93154 TO .
15	.93834	+ OR -	.00349	.93485 TO	.94183	.93136 TO .
20	.93862	+ OR -	.00383	.93479 TO	.94245	.93096 TO .
25	.93953	+ OR -	.00428	.93524 TO	.94381	.93096 TO .
30	.94039	+ OR -	.00371	.93668 TO	.94410	.93297 TO .
35	.93967	+ OR -	.00429	.93538 TO	.94395	.93109 TO .
40	.93514	+ OR -	.00475	.93039 TO	.93989	.92565 TO .
45	.92837	+ OR -	.00519	.92318 TO	.93356	.91800 TO .
50	.93689	+ OR -	.00721	.92968 TO	.94410	.92248 TO .

Page Added
Oct. 1990

NITAWL - EBR-II

```
NO.NEBR
3/31/86 11:48:31 (31)
 27       1SS 0 16 52 3 22 -1 0 T
 27       2SS 92238 -592238 92235 -592235 3016 -555081  1001 -555011 13027
 27           24000 28000 26000 82000 5010 6012 94239
 29       3** 92238 294. 2 .5499 .07323 28.09 4.81-2 1 32 32 1.0
 27           592238 294. 0 0.0 0.00 20.0 4.773-2 1 32 32 1.0
 31           94239 294. 2 .5499 .07323 2091.6 6.46-4 1 238 893.5 1 32 1.0 T

: NONE. TIME:  0.456 SEC. IMAGE COUNT: 6


% CONTROL MODE


NL.NITAWL
```

Page Added
Oct. 1990

```
THIS XSDRN WORKING TAPE WAS CREATED
THE TITLE OF THE PARENT CASE IS AS FOLLOWS
27 NEUTRON GROUP LIBRARY
   BASED ON ENDF/B VERSION 4 DATA
    COMPILED FOR NRC
    TAPE ID                                  4321          NUMBER OF NUCLIDES
    NUMBER OF NEUTRON GROUPS                   27          NUMBER OF GAMMA GROUPS
    FIRST THERMAL GROUP                        15
                                        TABLE OF CONTENTS
  H 1269 F, 1002 T 218 GP 032475(2)
  H 1269 F, 1002 T 218 GP 032475(2)
  B-10 1273 218NGP 042375 P-3 293K
  C-12 1274F,1065T 218 GP 030476(7)
  O-16 1276 218 GP 030476(7)
  O-16 1276 218 GP 030476(7)
  AL-27 1193 218 GP 040375(5)
  CR 1191 218NGP WT 1/E P-3 293K SIGP=5+4 RE(042375)
  FE 218GP RE 5-17-78(1)
  NI 1190 218NGP WT 1/E P-3 293K SIGP=5+4 RE(042375)
  PB   1288 218NGP 042375 P-3 293K
  U-235 1261 SIGP=5+4 NEWXLACS 218NGP P-3 293K(3)
  U-235 1261 SIGP=5+4 NEWXLACS 218NGP P-3 293K(3)
  U-238 218GP RE 5-17-78(1)
  U-238 218GP RE 5-17-78(1)
  PU-239 1264 SIGP=5+4 NEWXLACS 218NGP P-3 293K

.EKPT PRINTS
```

XSDRNPM - EBR-II FUEL

```
.G.XEBR
/31/86 12:1C:39 (21)
19        XSDRNPM FOR EBR METAL FUEL
17        1SS 2 3 2C 1 3 3 39 3 3 1 2R10 FC
17        2SS -2 FC
17        3SS 1 32 1000 2Z 1 FC
17        4SS -1 27 C -2 E T
17        13SS 3R1 2 2R3 11R1 11R2 11R3
19        14SS 92235 92238 94239 13027 555031 555011
17             8016 1001 82000 24000 28000 26000
17              13027 5C1C 6012  592238 592235 2Q11
2C        15** 1.025-4 4.81-2 6.46-4 6.026-2 3.3461-2 6.6922-2 F1.-15 T
17        33** F1.0 T
21        35** 91C.0 .5499 .55C 71.7938 1.273
17        36SS 1CR1 2R2 3R3
17        38** 1CP1.0 0.0 F1.C
17        39SS 1 2 3
17        4CSS F3
17        51SS 1 2 3 4 5 6 7 8 9 10 11 12 13 14 15 16 17
17            18 19 2C 21 22 23 24 25 26 27 T

: NONE. TIME:  0.349 SEC. IMAGE COUNT: 18

NPM.XSDRNPM
```

Page Added
Oct. 1990

```
BADD,DEP 998C04*KENO.XEBR
                                XSDRNPM FOR EBR METAL FUEL

    1S ARRAY      15 ENTRIES READ

    2S ARRAY      10 ENTRIES READ

    3S ARRAY      12 ENTRIES READ

    4S ARRAY       9 ENTRIES READ

    CT

DIRECT ACCESS FILES ASSIGNED
  3000 WORDS PER RECORD ON UNIT 8          1 PHYSICAL RECORDS PER LOGICAL
   280 WORDS PER RECORD ON UNIT 9         10 PHYSICAL RECORDS PER LOGICAL
  3000 WORDS PER RECORD ON UNIT 10         1 PHYSICAL RECORDS PER LOGICAL

GENERAL PROBLEM DESCRIPTION DATA BLOCK

                                GENERAL PROBLEM DATA

IGE   1/2/3 = PLANE/CYLINDER/SPHERE        2        ISN   QUADRATURE ORDER
IZM   NUMBER OF ZONES                      3        ISCT  ORDER OF SCATTERING
IM    NUMBER OF SPACIAL INTERVALS         20        IEVT  0/1/2/3/4/5/6=Q/K/ALPHA
IBL   0/1/2/3 = VACUUM/REFL/PER/WHITE      1        IIM   INNER ITERATION MAXIMUM
IBR   RIGHT BOUNDARY CONDITION             3        ICM   OUTER ITERATION MAXIMUM
MXX   NUMBER OF MIXTURES                   3        ICLC  -1/0/N--FLAT RES/SN/CP
MS    MIXING TABLE LENGTH                 39        ITH   0/1 = FORWARD/ADJOINT
IGM   NUMBER OF ENERGY GROUPS             27        IFLU  0/1/2/3/4=L-S/L/S/W/L-W
NNG   NUMBER OF NEUTRON GROUPS            27        IPRT  -2/-1/0/N=MIXTURE XSEC P
NGG   NUMBER OF GAMMA GROUPS               0        ID1   0/1/2/3=NO/PRT ND/PCH N/
IFTG  NUMBER OF FIRST THERMAL GROUP       15        IPBT  -1/0/1=NONE/FINE/ALL BAL

                                SPECIAL OPTIONS

IFG   0/1 = NONE/WEIGHTING CALCULATION     1        IPN   DUMMY PARAMETER
IGM   VOLUMETRIC SOURCES (0/N=NO/YES)      0        IDFM  0/1 = NONE/DENSITY FACTO
IPM   BOUNDARY SOURCES (0/N=NO/YES)        0        IAZ   0/N = NONE/N ACTIVITIES
IFN   0/1/2 = INPUT 33*/34*/USE LAST       0        IAI   0/1=NONE/ACTIVITIES BY I
ITMX  MAXIMUM TIME (MINUTES)            1000        IFCT  0/1=NO/YES UPSCATTER SCA
IDT1  0/1/2/3=NO/XSECT/SRCE/FLUX--OUT      0        IPVT  0/1/2=NO/K/ALPHA PARAMET

                                WEIGHTING DATA (IFG=1)

ICCN  -1/0/1=CELL/ZONE/REGION WEIGHT      -1        IHTF  TOTAL XSECT PSN IN BRD G
IGMF  NUMBER OF BROAD GROUPS              27        NDSF  PSN G-G OR FILE NUMBER
ITP   0/10/20/30/40 0/C/E/AC/A             0        NUSF  TABLE LENGTH OR MAX ORDE
IPP   -2/-1/0/N=WGTED XSECT PRINT         -2        MSCM  EXTRA 1-D X-SECT POSITIO
IAP   -1/N ANISN XSECT PRINT              -1

                                FLOATING POINT PARAMETERS
```


Page Added
Oct. 1990

```
   XSDRNPM FOR EBR METAL FUEL

:ES READ

IES READ

IES READ
```

DATA BLOCK 2 (MIXING TABLE, ETC.)

CC ICATION	MIXTURE	MIXING TABLE COMPONENT	ATOM DENSITY	EXT XSECT
	1	92235	.10250-003	
	1	92238	.48100-001	
	1	94239	.64600-003	
	2	13027	.60260-001	
	3	555081	.33461-001	
	3	555011	.66922-001	
	1	8016	.10000-014	
	1	1001	.10000-014	
	1	82000	.10000-014	
	1	24000	.10000-014	
	1	28000	.10000-014	
	1	26000	.10000-014	
	1	13027	.10000-014	
	1	5010	.10000-014	
	1	6012	.10000-014	
	1	592238	.10000-014	
	1	592235	.10000-014	
	2	8016	.10000-014	
	2	1001	.10000-014	
	2	82000	.10000-014	
	2	24000	.10000-014	
	2	28000	.10000-014	
	2	26000	.10000-014	
	2	13027	.10000-014	
	2	5010	.10000-014	
	2	6012	.10000-014	
	2	592238	.10000-014	
	2	592235	.10000-014	
	3	8016	.10000-014	
	3	1001	.10000-014	
	3	82000	.10000-014	
	3	24000	.10000-014	
	3	28000	.10000-014	
	3	26000	.10000-014	
	3	13027	.10000-014	
	3	5010	.10000-014	
	3	6012	.10000-014	
	3	592238	.10000-014	
	3	592235	.10000-014	

```
ECTIONS
00000 MIN.
```

Page Added
Oct. 1990

```
OUTER INNER        BALANCE     UPSCATTER RATIO     EIGENVALUE          LAMBDA1
    1   225   1.0000008+000   1.3643240+000   1.2663255+000   1.3412539+000
    2   400   1.0000008+000   1.0357222+000   1.3441527+000   1.0105986+000    1
    3   492   1.0000007+000   1.0022620+000   1.3546951+000   9.9997327-001    1
    4   563   1.0000008+000   9.9964233-001   1.3557047+000   1.0000948+000    1
    5   610   1.0000008+000   9.9995653-001   1.3557675+000   1.0001246+000    9
    6   638   1.0000008+000   9.9998087-001   1.3556951+000   9.9995276-001    9
GRP.    1 REQUIRED    1 ITERATIONS. MFD OF  1.29866-005 OCCURRED IN INT.  20  COA
GRP.    2 REQUIRED    1 ITERATIONS. MFD OF  2.08372-006 OCCURRED IN INT.  20  COA
GRP.    3 REQUIRED    1 ITERATIONS. MFD OF  2.15871-006 OCCURRED IN INT.  19  COA
GRP.    4 REQUIRED    1 ITERATIONS. MFD OF  1.54434-006 OCCURRED IN INT.   1  COA
GRP.    5 REQUIRED    1 ITERATIONS. MFD OF  1.11524-006 OCCURRED IN INT.   1  COA
GRP.    6 REQUIRED    1 ITERATIONS. MFD OF  7.90381-007 OCCURRED IN INT.   1  COA
GRP.    7 REQUIRED    1 ITERATIONS. MFD OF  4.63276-007 OCCURRED IN INT.  18  COA
GRP.    8 REQUIRED    1 ITERATIONS. MFD OF  1.25514-006 OCCURRED IN INT.   1  COA
GRP.    9 REQUIRED    1 ITERATIONS. MFD OF  3.37654-006 OCCURRED IN INT.   1  COA
GRP.   10 REQUIRED    1 ITERATIONS. MFD OF  4.78791-006 OCCURRED IN INT.   1  COA
GRP.   11 REQUIRED    1 ITERATIONS. MFD OF  7.37873-006 OCCURRED IN INT.   1  COA
GRP.   12 REQUIRED    1 ITERATIONS. MFD OF  1.20543-005 OCCURRED IN INT.   2  COA
GRP.   13 REQUIRED    1 ITERATIONS. MFD OF  1.50099-005 OCCURRED IN INT.   2  COA
GRP.   14 REQUIRED    1 ITERATIONS. MFD OF  1.72049-005 OCCURRED IN INT.   1  COA
GRP.   15 REQUIRED    1 ITERATIONS. MFD OF  6.39652-005 OCCURRED IN INT.  20  COA
GRP.   16 REQUIRED    1 ITERATIONS. MFD OF  6.91871-005 OCCURRED IN INT.  20  COA
GRP.   17 REQUIRED    1 ITERATIONS. MFD OF  7.67360-005 OCCURRED IN INT.  20  COA
GRP.   18 REQUIRED    1 ITERATIONS. MFD OF  7.68557-005 OCCURRED IN INT.  20  COA
GRP.   19 REQUIRED    1 ITERATIONS. MFD OF  6.73722-005 OCCURRED IN INT.  20  COA
GRP.   20 REQUIRED    1 ITERATIONS. MFD OF  4.76832-005 OCCURRED IN INT.  20  COA
GRP.   21 REQUIRED    1 ITERATIONS. MFD OF  5.25938-005 OCCURRED IN INT.  14  COA
GRP.   22 REQUIRED    1 ITERATIONS. MFD OF  6.68174-005 OCCURRED IN INT.  20  COA
GRP.   23 REQUIRED    1 ITERATIONS. MFD OF  8.18378-006 OCCURRED IN INT.  14  COA
GRP.   24 REQUIRED    1 ITERATIONS. MFD OF  6.40463-006 OCCURRED IN INT.   1  COA
GRP.   25 REQUIRED    1 ITERATIONS. MFD OF  5.30666-006 OCCURRED IN INT.   1  COA
GRP.   26 REQUIRED    1 ITERATIONS. MFD OF  3.19517-006 OCCURRED IN INT.  14  COA
GRP.   27 REQUIRED    1 ITERATIONS. MFD OF  3.24110-006 OCCURRED IN INT.  16  COA
    7   665   1.0000008+000   9.9999541-001   1.3556895+000   9.9999935-001    9
        FINAL MINITOR          LAMBDA  1.3556724+000          ANGULAR FLUX ON
 ELAPSED TIME    2.29266664 MIN.
```


Page Added
Oct. 1990

KENO - EBR-II - NORMAL OPERATION

```
0.XB040EBR
/17/86 22:00:06 (19)
15      FOUR ASBL BASKET FOR EBR II FUEL, .040 BORON
16      200. 50 403 6 27 27 16 7 18 25 8 4 2 1 -16 1 0 2000 0 1 9z
15      -1 0 0 3R-1
15      1  92235 1.9115-5  1  92238 8.9701-3  1  -94239 1.2047-4
15      1   13027 1.218-2  1  555011 4.0927-2   1  555081  2.0463-2
15      2   5010 8.361-3  2  6012 1.083-2  2  13027 3.013-2
15      3    8016 3.3461-2  3   1001 6.6922-2
15      4   24000 1.839-2  4  28000 1.815-3  4  26000 5.994-2
15      5   13027 6.026-2
15      6   82000 3.299-2
15      7   592238 4.773-2  7   -592235 1.052-4
15      BOX TYPE  1
15      CYLINDER  1   6.191  1000. -1000. 27*0.5
19      CUBOID  3   6.824 -6.191   6.824 -6.191   1000. -1000. 27*0.5
15      BOX TYPE  2
18      CUBOID  2  13.015  0.000  0.1441  0.000   1000. -1000. 27*0.5
18      CUBOID  4  13.015  0.000  0.7791  0.000   1000. -1000. 27*0.5
15      BOX TYPE  3
18      CUBOID  2  0.1441  0.000  13.015  0.000   1000. -1000. 27*0.5
18      CUBOID  4  0.7791  0.000  13.015  0.000   1000. -1000. 27*0.5
15      BOX TYPE  4
15      CUBOID  4   0.000 -0.635   0.000 -0.635   1000. -1000. 27*0.5
15      CUBOID  2   0.000 -0.7791  0.000 -0.7791  1000. -1000. 27*0.5
15      BOX TYPE  5
15      CYLINDER  1   6.191  1000. -1000. 27*0.5
19      CUBOID  3   6.191 -6.824   6.824 -6.191   1000. -1000. 27*0.5
15      BOX TYPE  6
18      CUBOID  2  0.000 -13.015  0.1441  0.000   1000. -1000. 27*0.5
18      CUBOID  4  0.000 -13.015  0.7791  0.000   1000. -1000. 27*0.5
15      BOX TYPE  7
18      CUBOID  2  0.000 -0.1441  13.015  0.000   1000. -1000. 27*0.5
18      CUBOID  4  0.000 -0.7791  13.015  0.000   1000. -1000. 27*0.5
15      BOX TYPE  8
15      CUBOID  4   0.635  0.000   0.000 -0.635   1000. -1000. 27*0.5
15      CUBOID  2   0.7791 0.000   0.000 -0.7791  1000. -1000. 27*0.5
18      CORE BDY  0  13.7941 -13.7941 13.7941 0.00 1000. -1000. 27*0.5
18      ZHEMICYL+Y  3  19.509 1000. -1000. 27*0.5
18      ZHEMICYL+Y  4  19.600 1000. -1000. 27*0.5
15      ZHEMICYL+Y  7  25.309 1000. -1000. 27*0.5
15      ZHEMICYL+Y  6  30.706 1000.  -1000.  27*0.5
15      ZHEMICYL+Y  4  32.93 1000. -1000. 27*0.5
15      ZHEMICYL+Y  3  45.629  1000.  -1000.  27*0.5
15      ZHEMICYL+Y  4  46.264  1000.  -1000.  27*0.5
15      CUBOID  3  63. -63. 63. 0.00 1000. -1000. 27*0.5
15      1  4 4 1  2 2 1  1 1 1  0
15      2  4 4 1  1 1 1  1 1 1  0
15      3  3 3 1  2 2 1  1 1 1  0
15      4  3 3 1  1 1 1  1 1 1  0
15      5  1 1 1  2 2 1  1 1 1  0
15      6  1 1 1  1 1 1  1 1 1  0
15      7  2 2 1  2 2 1  1 1 1  0
15      8  2 2 1  1 1 1  1 1 1  1
15      END KENO.

: NONE. TIME:  0.491 SEC. IMAGE COUNT: 53
```

Page Added
Oct. 1990

```
 FOUR ASBL BASKET FOR EBR II FUEL, .040 BORON
NUMBER OF GENERATIONS                    50                    START TYPE
NUMBER PER GENERATION                   403                    GENERATIONS BET
NUMBER OF GENERATIONS TO BE SKIPPED       6                    LIST INPUT X-SE
NUMBER OF ENERGY GROUPS                  27                    LIST 1-D MIXTUF
MAX. NUMBER OF ENERGY TRANSFERS          27                    LIST 2-D MIXTUF
NUMBER OF INPUT NUCLIDES                 16                    LIST FISS. AND
NUMBER OF MIXTURES                        7                    USE X-SECTIONS
NUMBER OF MIXING TABLE ENTRIES           18                    USE GEOMETRY F
NUMBER OF GEOMETRY CARDS                 25                    USE VELOCITIES
NUMBER OF BOX TYPES                       5                    COMPUTE MATRIX
NUMBER OF UNITS IN X DIRECTION            4                    COMPUTE MATRIX
NUMBER OF UNITS IN Y DIRECTION            2                    LIST FISS PROB
NUMBER OF UNITS IN Z DIRECTION            1                    ADJOINT CALCUL
NUMBER OF NUCLIDES READ FROM TAPE       -16                    USE EXPONENTIAL
ALBEDO TYPE                               1                    CALCULATE FLUX
SEARCH TYPE                               0                    CALCULATE FISS
THIS PROBLEM WILL BE RUN WITH SPECULARLY REFLECTING BOUNDARY CONDITION
THE ALBEDOS ARE +X = 1.00000+000 -X =  .00000     +Y =  .00000     -Y = 1.00000+
MAXIMUM TIME = 200.0000 MINUTES
STORAGE LOCATIONS REQUIRED FOR THIS JOB =     24763
REMAINING AVAILABLE LOCATIONS=    375237
```


Page Added
Oct. 1990

FOUR ASBL BASKET FOR EBR II FUEL, .040 BORON

MIXTURE	NUCLIDE	DENSITY
1	92235	1.91150-005
1	92238	8.97010-003
1	-94239	1.20470-004
1	13027	1.21800-002
1	555011	4.09270-002
1	555081	2.04630-002
2	5010	8.36100-003
2	6012	1.08300-002
2	13027	3.01300-002
3	8016	3.34610-002
3	1001	6.69220-002
4	24000	1.83900-002
4	28000	1.81500-003
4	26000	5.99400-002
5	13027	6.02600-002
6	82000	3.29900-002
7	592238	4.77300-002
7	-592235	1.05200-004

CROSS SECTIONS READ FROM TAPE

```
NUCLIDE =      1001   H 1269 F, 1002 T 218 GP 032475(2)
NUCLIDE =    555011   H 1269 F, 1002 T 218 GP 032475(2)
NUCLIDE =      5010   B-10 1273 218NGP 042375 P-3 293K
NUCLIDE =      6012   C-12 1274F,1065T 218 GP 030476(7)
NUCLIDE =      8016   O-16 1276 218 GP 030476(7)
NUCLIDE =    555081   O-16 1276 218 GP 030476(7)
NUCLIDE =     13027   AL-27 1193 218 GP 040375(5)
NUCLIDE =     24000   CR 1191 218NGP WT 1/E P-3 293K SIGP=5+4 RE(042375)
NUCLIDE =     26000   FE 218GP RE 5-17-78(1)
NUCLIDE =     28000   NI 1190 218NGP WT 1/E P-3 293K SIGP=5+4 RE(042375)
NUCLIDE =     82000   PB   1288 218NGP 042375 P-3 293K
NUCLIDE =     92235   U-235 1261 SIGP=5+4 NEWXLACS 218NGP P-3 293K(3)
NUCLIDE =    592235   U-235 1261 SIGP=5+4 NEWXLACS 218NGP P-3 293K(3)
NUCLIDE =     92238   U-238 218GP RE 5-17-78(1)
NUCLIDE =    592238   U-238 218GP RE 5-17-78(1)
NUCLIDE =     94239   PU-239 1264 SIGP=5+4 NEWXLACS 218NGP P-3 293K
```

Page Added
Oct. 1990

```
 FOUR ASBL BASKET FOR EBR II FUEL, .040 BORON

ARRAY DESCRIPTION
Z =      1

  5    7    3    1

  6    8    4    2
```

FOUR ASBL BASKET FOR EBR II FUEL, .040 BORON

LIFETIME = 1.09347-004 + OR - 1.46476-006 GENERATION TIME = 5.572

NO. OF INITIAL GENERATIONS SKIPPED	AVERAGE K-EFFECTIVE	DEVIATION	67 PER CENT CONFIDENCE INTERVAL	95 PE CONFIDENC
6	.68167	+ OR - .00378	.67789 TO .68545	.67411 TO
7	.68189	+ OR - .00386	.67803 TO .68575	.67417 TO
8	.68192	+ OR - .00395	.67797 TO .68588	.67402 TO
9	.68171	+ OR - .00405	.67766 TO .68575	.67362 TO
10	.68144	+ OR - .00414	.67730 TO .68558	.67316 TO
11	.68056	+ OR - .00415	.67641 TO .68471	.672[illegible] TO
12	.67933	+ OR - .00407	.67526 TO .68339	.67119 TO
13	.67899	+ OR - .00416	.67482 TO .68315	.67066 TO
14	.67929	+ OR - .00427	.67503 TO .68356	.67076 TO
15	.67952	+ OR - .00439	.67513 TO .68391	.67075 TO
20	.67990	+ OR - .00488	.67501 TO .68478	.67013 TO
25	.67922	+ OR - .00552	.67370 TO .68473	.66819 TO
30	.68111	+ OR - .00668	.67443 TO .68779	.66774 TO
35	.68387	+ OR - .00834	.67553 TO .69220	.66719 TO
40	.68757	+ OR - .01155	.67602 TO .69911	.66447 TO
45	.70838	+ OR - .01640	.69197 TO .72478	.67557 TO

Page Added
Oct. 1990

KENO - EBR-II HYPOTHETICAL ACCIDENT

```
:0.KB04CEBRHA
'/18/86 01:33:08 (22)
18      FOUR ASBL BASKET FOR EBR II FUEL, .040 BORON, H.A.
20      200. 50 403 6 27 27 16 7 18 25 8 4 2 1 -16 1 0 2000 0 1 8Z
18      0 0 0 3R-1
18      1  92235 1.9115-5  1  92238 8.9701-3  1  -94239 1.2047-4
18      1   13027 1.218-2  1  555011 4.0927-2   1  555081  2.0463-2
18      2   5010 8.361-3  2  6012 1.083-2  2  13027 3.013-2
18      3    8016 3.3461-2  3   1001 6.6922-2
18      4   24000 1.839-2  4  28000 1.815-3  4  26000 5.994-2
18      5   13027 6.026-2
18      6   82000 3.299-2
18      7   592238 4.773-2  7   -592235 1.052-4
18      BOX TYPE  1
18      CUBOID  1  10.973  0.000  10.973  0.000   1000. -1000. 27*0.5
22      CUBOID  3  13.015  0.000  13.015  0.000   1000. -1000. 27*0.5
18      BOX TYPE  2
22      CUBOID  2  13.015  0.000  0.1441  0.000   1000. -1000. 27*0.5
22      CUBOID  4  13.015  0.000  0.7791  0.000   1000. -1000. 27*0.5
18      BOX TYPE  3
22      CUBOID  2  0.1441  0.000  13.015  0.000   1000. -1000. 27*0.5
22      CUBOID  4  0.7791  0.000  13.015  0.000   1000. -1000. 27*0.5
20      BOX TYPE  4
20      CUBOID  4   0.000 -0.635   0.000 -0.635   1000. -1000. 27*0.5
20      CUBOID  2   0.000 -0.7791  0.000 -0.7791  1000. -1000. 27*0.5
18      BOX TYPE  5
18      CUBOID  1  0.000 -10.973  10.973  0.000   1000. -1000. 27*0.5
22      CUBOID  3  0.000 -13.015  13.015  0.000   1000. -1000. 27*0.5
18      BOX TYPE  6
22      CUBOID  2  0.000 -13.015  0.1441  0.000   1000. -1000. 27*0.5
22      CUBOID  4  0.000 -13.015  0.7791  0.000   1000. -1000. 27*0.5
18      BOX TYPE  7
22      CUBOID  2  0.000 -0.1441  13.015  0.000   1000. -1000. 27*0.5
22      CUBOID  4  0.000 -0.7791  13.015  0.000   1000. -1000. 27*0.5
20      BOX TYPE  8
20      CUBOID  4   0.635  0.000   0.000 -0.635   1000. -1000. 27*0.5
20      CUBOID  2   0.7791 0.000   0.000 -0.7791  1000. -1000. 27*0.5
22      CORE BDY  0  13.7941 -13.7941 13.7941 0.00 1000. -1000. 27*0.5
22      ZHEMICYL+Y  3  19.509 1000. -1000. 27*0.5
22      ZHEMICYL+Y  4  19.600 1000. -1000. 27*0.5
18      ZHEMICYL+Y  7  25.309 1000. -1000. 27*0.5
18      ZHEMICYL+Y  6  30.706 1000.  -1000.  27*0.5
18      ZHEMICYL+Y  4  32.93 1000. -1000. 27*0.5
18      ZHEMICYL+Y  3  45.629  1000.  -1000.  27*0.5
18      ZHEMICYL+Y  4  46.264  1000.  -1000.  27*0.5
18      CUBOID  3  63. -63. 63. 0.00 1000. -1000. 27*0.5
18      1  4 4 1  2 2 1  1 1 1  0
18      2  4 4 1  1 1 1  1 1 1  0
18      3  3 3 1  2 2 1  1 1 1  0
18      4  3 3 1  1 1 1  1 1 1  0
18      5  1 1 1  2 2 1  1 1 1  0
18      6  1 1 1  1 1 1  1 1 1  0
18      7  2 2 1  2 2 1  1 1 1  0
18      8  2 2 1  1 1 1  1 1 1  1
18      END KENO.

: NONE. TIME:  0.450 SEC. IMAGE COUNT: 53
```


Page Added
Oct. 1990

FOUR ASBL BASKET FOR EBR II FUEL, .C4C BORON, H.A.

LIFETIME = 1.15041-004 + OR - 1.07736-006 GENERATION TIME = 5.83243

NO. OF INITIAL GENERATIONS SKIPPED	AVERAGE K-EFFECTIVE	DEVIATION	67 PER CENT CONFIDENCE INTERVAL	95 PER CONFIDENCE
6	.67571	+ OR - .00385	.67186 TO .67956	.66802 TO
7	.67518	+ OR - .00390	.67128 TO .67908	.66738 TO
8	.67536	+ OR - .00399	.67137 TO .67935	.66739 TO
9	.67525	+ OR - .00408	.67117 TO .67934	.66708 TO
10	.67485	+ OR - .00417	.67068 TO .67901	.66651 TO
11	.67488	+ OR - .00428	.67060 TO .67915	.6663[illegible]
12	.67428	+ OR - .00435	.66993 TO .67863	.66559 TO
13	.67585	+ OR - .00417	.67168 TO .68001	.66751 TO
14	.67630	+ OR - .00426	.67205 TO .68056	.66779 TO
15	.67626	+ OR - .00438	.67188 TO .68065	.66750 TO
20	.67896	+ OR - .00465	.67431 TO .68361	.66967 TO
25	.67771	+ OR - .00524	.67247 TO .68296	.66722 TO
30	.67676	+ OR - .00568	.67108 TO .68245	.66540 TO
35	.67724	+ OR - .00710	.67014 TO .68435	.66304 TO
40	.67246	+ OR - .01025	.66221 TO .68272	.65195 TO
45	.66459	+ OR - .01852	.64608 TO .68311	.62756 TO

Page Added
Oct. 1990

SECTION X

APPENDIX G

CRITICALITY ANALYSIS FOR CONNECTICUTT YANKEE STAINLESS CLAD ASSEMBLIES

INTRODUCTION:

The design basis fuel for the NLI-1/2 shipping cask is a 3.7 w/o U-235 enrichment PWR fuel assembly with zircalloy cladding. The Connecticutt Yankee reactor uses Westinghouse 15x15 fuel with a nominal 4.0 w/o enrichment and stainless steel cladding. This enrichment is greater than the license limit for the NLI-1/2 cask so the reactivity of the stainless clad fuel in the cask must be determined. The procedure used here was to calculate k_{eff} for the design basis 3.7 w/o zircalloy clad fuel and repeat the calculation for the 4.0 w/o stainless clad fuel. Comparison of k_∞ and k_{eff} for the design basis and stainless clad fuel would then show if the higher enrichment stainless clad fuel is acceptable in the cask. The other fuel characteristics are all within the cask license limits so no analyses other than criticality are needed.

FUEL DATA:

The fuel data parameters used in this analysis are shown in Table I. Both the design basis calculation and stainless clad fuel are for Westinghouse 15x15 assemblies with 204 rods/assembly. There are three Connecticutt Yankee assemblies to be shipped, and one of them, H-07M, has been modified by encapsulating 23 rods with stainless steel sleeves. The sleeved rods have a larger diameter than a normal rod, so 15 of them have been inserted into the guide tube locations and 8 have been placed (in pairs) in holes made by removing a 2 by 2 group of rods. Some locations have dummy rods inserted to replace the missing (sleeved) rods. The modified assembly still contains the normal quota of 204 fuel rods, but has only three empty (water-filled) guide tube locations instead of the normal 21 water rod locations. These modifications to H-07M result in a lessened moderator to fuel ratio and an increase in the stainless steel absorber amount, which reduces the k_∞ of the lattice given that the standard assembly is undermoderated.

Page Added
Oct. 1990

KENO MODEL:

The KENO-IV cask body model is identical to the model previously used in amending the cask license for shipment of Fermi-1 fuel and consists of the steel, depleted uranium, lead, and water neutron shield cylinders which comprise the cask. The model treats the fuel and cask as if it were infinitely long, ignoring neutron leakage from the top and bottom of the fuel. The cross-section sets were prepared for this analysis using the AMPX system modules NITAWL and XSDRNPM, and both Normal Operation and Hypothetical Accident cross-section sets were prepared for zircalloy and stainless steel clad fuel types. The NITAWL resonance data parameters were obtained from the NULIF code development by Babcock and Wilcox and are listed with fuel parameters used by XSDRNPM and KENO-IV in Table II. All calculations were performed for fresh, unirradiated fuel. The computer input and results for each case are included in this Appendix.

RESULTS AND DISCUSSION:

The k_{inf} and k_{eff} results for the two fuels in Normal Operation and Hypothetical Accident scenarios are shown in Table III. The k_{inf} values for the stainless clad fuel are significantly less for both scenarios, indicating that the stainless fuel is less reactive than the cask design basis fuel even though it has a higher enrichment. This is confirmed by the KENO-IV calculations of k_{eff} which determine that the stainless clad fuel is less reactive as it is shipped in the NLI 1/2 cask.

The actual percent of theoretical density and enrichment of each of the three assemblies deviates slightly from the nominal 95% T.D. and 4.0 w/o U-235. The actual values shown in Table IV along with the k_{inf} results. Comparison of the k_{inf} of the nominal stainless clad fuel to the actual assemblies shows a negligible difference resulting from the deviations.

CONCLUSION:

The k_{inf} and resulting k_{eff} in the cask of the stainless steel clad fuel enriched to 4.0 w/o U-235 are lower than the design basis PWR fuel assembly, therefore the shipment of the three Connecticut Yankee fuel assemblies is critically safe in the NLI 1/2 cask.

Table I

Fuel Data

Item	Design Basis W15x15	Stainless Clad
Enrichment	3.7 w/o	4.0 w/o
Active length	144"	121.4"
Pellet Data:		
N_{25}	8.697-4	9.403-4
N_{28}	2.235-2	2.228-2
N_O	4.642-2	4.642-2
Pellet Radius	0.4647 cm	0.4870 cm
Clad Data:		
Material	Zircalloy	Stainless
$N_{Material}$	4.227-2	8.01-2
Gap Radius	0.4742 cm	0.5010 cm
Clad Radius	0.5360 cm	0.5429 cm
No. of Rods/Assembly	204	204
Normal Operation:		
Cell Pitch	1.430 cm	1.430 cm
Cell Effective Radius	0.8068 cm	0.8068 cm
Hypothetical Accident:		
(204 Rods equally share the 8.88" cask basket cavity area in the Hypothetical Accident Scenario)		
Cell Pitch	1.579 cm	1.579 cm
Cell Effective Radius	0.891 cm	0.891 cm

Page Added
Oct. 1990

Table II

Analysis Parameters

NORMAL OPERATION:

Item	Design Basis W15x15	Stainless Clad
Dancoff Coefficient	0.2143	0.2217
$(\sigma_m)_{eff}$	56.55	54.66
Number Densities in Homogenized Fuel used in KENO-IV		
N_{25}	2.616-4	3.107-4
N_{28}	6.723-4	7.361-3
N_O	3.404-2	3.506-2
$N_{Cladding}$	3.673-3	4.880-3
N_H	4.016-2	3.946-2

HYPOTHETICAL ACCIDENT:

Item	Design Basis W15x15	Stainless Clad
Dancoff Coefficient	0.1462	0.1521
$(\sigma_m)_{eff}$	59.84	57.87
Number Densities in Homogenized Fuel used in KENO-IV		
N_{25}	2.146-4	2.548-4
N_{28}	5.514-4	6.037-3
N_O	3.394-2	3.478-2
$N_{Cladding}$	3.012-3	4.003-3
N_H	4.497-2	4.440-2

Page Added
Oct. 1990

Table III

Analysis Results

NORMAL OPERATION:

Item	Design Basis W15x15	Stainless Clad
k_∞	1.4379	1.3630
k_{eff}	0.92666±0.00523	0.90389±0.00416

HYPOTHETICAL ACCIDENT:

Item	Design Basis W15x15	Stainless Clad
k_∞	1.4463	1.3795
k_{eff}	0.95411±0.00497	0.93540±0.00477

Page Added
Oct. 1990

Table IV

Assembly Reactivities

Item	Nominal 4.0 w/o fuel	Assembly H07M	Assembly G11	Assembly S04
Enrichment	4.0	3.994	4.007	3.9871
Percent of Theoretical Density	95	95.17	94.85	93.2
NULIF k_∞	1.3630	1.3627	1.3634	1.3619

Page Added
Oct. 1990

NITAWL INPUT - ZIRC NORMAL OPERATIONS

```
 STE*STAINLESS.NW15
 ~ ~5R2Q5 06/1~/87 17:05:~7 (21)
.          13      1$$ 0 14 5Z 2 2Z -1 0 T
.          13      2$$ 92238 -592238  92235 -592235  8016 -558016  1001 -5510
.          18          40000 13027 24000 26000 28000 82000
.          20     3**   92233 294. 2 .4647 .2143 56.55 2.235-2 1 16 ~.67 1 3Z
.          13          592238 294. 0 0.0 0.0 20. 4.773-2 1 3Z 3Z 1.0 T

~.  ERRORS: NONE. TIME:  0.222 SEC. IMAGE COUNT: 5


IGNORED - IN CONTROL MODE


~1~00*NI~AWL.NITAWL
```


Page Added
Oct. 1990

NITAWL OUTPUT - ZIRC NORMAL OPERATIONS

```
THIS XSDRN WORKING TAPE WAS CREATED
THE TITLE OF THE PARENT CASE IS AS FOLLOWS
27 NEUTRON GROUP LIBRARY
   BASED ON ENDF/B VERSION 4 DATA
    COMPILED FOR NRC
    TAPE ID                                  4321          NUMBER OF NUCLIDES
    NUMBER OF NEUTRON GROUPS                   27          NUMBER OF GAMMA GROU
    FIRST THERMAL GROUP                        15
                                        TABLE OF CONTENTS
  H 1269 F, 1002 T 218 GP 032475(2)
  H 1269 F, 1002 T 213 GP 032475(2)
  O-16 1276 218 GP 030476(7)
  O-16 1276 218 GP 030476(7)
  AL-27 1193 218 GP 040375(5)
  CR 1191 218NGP WT 1/E P-3 293K SIGP=5+4 RE(042375)
  FE 218GP RE 5-17-78(1)
  NI 1190 218NGP WT 1/E P-3 293K SIGP=5+4 RE(042375)
  ZR(NAT) 7141 21 NGP WT FIS(0.1TO20)-1/E-MAX P-3
  PB   1203 218NGP 042375 P-3 293K
  U-235 1261 SIGP=5+4 NEWXLACS 218NGP P-3 293K(3)
  U-235 1261 SIGP=5+4 NEWXLACS 218NGP P-3 293K(3)
  U-233 218GP RE 5-17-78(1)
  U-233 218GP RE 5-17-78(1)

:KPT PRINTS
```

Page Added
Oct. 1990

XSDRNPM INPUT - ZIRC NORMAL OPERATION

```
.XW15
37 18:17:20 (32)
    WEST 15X15 ASBL, 3.7 W/O U-235, 95%T.D., NORMAL OP.
    1$$ 2 3 20 1 3 3 33 8 3 1 2R20 F0
    2$$ -2 F0
    3$$ 1 3Z 1000 2Z 1 F0
    4$$ -1 27 0 -2 E T
    13$$ 3R1 2 2R3 9R1 9R2 9R3
    14$$ 92235 92238 558016 40000 558016 551001
         8016 1001 13027 82000   24000 26000 28000
         592235  592238 2a9
    15** 8.697-4 2.235-2 4.642-2 4.227-2 3.347-2 6.694-2 F1.-15 T
    33** F1.0 T
    35** 9I0.0 .4647 .4742 7I.5360 0.8068
    36$$ 10R1 2R2 8R3
    38** 10R1.0 0.0 F1.0
    39$$ 1 2 3
    40$$ F3
    51$$ 1 2 3 4 5 6 7 8 9 10 11 12 13 14 15 16 17 18 19 20
      21 22 23 24 25 26 27  T

E. TIME:  0.200 SEC. IMAGE COUNT: 18


SDRNPM
```


Page Added
Oct. 1990

XSDRNPM OUTPUT - ZIRC NORMAL OPERATION

```
BADD,DEP STE*STAINLESS.XW15
                                WEST 15X15 ASBL, 3.7 W/O U-235, 95%T.D., NORMAL OP.

    1S ARRAY      15 ENTRIES READ

    2S ARRAY      10 ENTRIES READ

    3S ARRAY      12 ENTRIES READ

    4S ARRAY       9 ENTRIES READ

    3T

DIRECT ACCESS FILES ASSIGNED
  3000 WORDS PER RECORD ON UNIT 3          1 PHYSICAL RECORDS PER LOGICAL
   880 WORDS PER RECORD ON UNIT 9         10 PHYSICAL RECORDS PER LOGICAL
  3000 WORDS PER RECORD ON UNIT 10         1 PHYSICAL RECORDS PER LOGICAL

GENERAL PROBLEM DESCRIPTION DATA BLOCK

                                GENERAL PROBLEM DATA

IGE   1/2/3 = PLANE/CYLINDER/SPHERE        2        ISN   QUADRATURE ORDER
IZM   NUMBER OF ZONES                      3        ISCT  ORDER OF SCATTERING
IM    NUMBER OF SPACIAL INTERVALS         20        IEVT  0/1/2/3/4/5/6=Q/K/ALPHA.
IBL   0/1/2/3 = VACUUM/REFL/PER/WHITE      1        IIM   INNER ITERATION MAXIMUM
IBR   RIGHT BOUNDARY CONDITION             3        ICM   OUTER ITERATION MAX
MXX   NUMBER OF MIXTURES                   3        ICLC  -1/0/N--FLAT RES/SM/
MS    MIXING TABLE LENGTH                 23        ITH   0/1 = FORWARD/ADJOINT
IGM   NUMBER OF ENERGY GROUPS             27        IFLU  0/1/2/3/4=L-S/L/S/W/L-W
NNG   NUMBER OF NEUTRON GROUPS            27        IPRT  -2/-1/0/N=MIXTURE XSEC
NGG   NUMBER OF GAMMA GROUPS               0        ID1   0/1/2/3=NO/PRT ND/PCH N
IFTG  NUMBER OF FIRST THERMAL GROUP       15        IPBT  -1/0/1=NONE/FINE/ALL BA

                                SPECIAL OPTIONS

IFG   0/1 = NONE/WEIGHTING CALCULATION     1        IPN   DUMMY PARAMETER
IQM   VOLUMETRIC SOURCES (0/N=NO/YES)      0        IDFM  0/1 = NONE/DENSITY FACT
IPM   BOUNDARY SOURCES (0/N=NO/YES)        0        IAZ   0/N = NONE/N ACTIVITIES
IFN   0/1/2 = INPUT 33*/34*/USE LAST       0        IAI   0/1=NONE/ACTIVITIES BY
ITMX  MAXIMUM TIME (MINUTES)            1000        IFCT  0/1=NO/YES UPSCATTER SC
ID71  0/1/2/3=NO/XSECT/SRCE/FLUX--OUT      0        IPVT  0/1/2=NO/K/ALPHA PARAME

                              WEIGHTING DATA (IFG=1)

ICON  -1/0/1=CELL/ZONE/REGION WEIGHT      -1        IHTF  TOTAL XSECT PSN IN BRD
IGMF  NUMBER OF BROAD GROUPS              27        NDSF  PSN G-G OR FILE NUMBER
ITP   0/10/20/30/40 0/C/E/AC/A             0        NUSF  TABLE LENGTH OR MAX ORDE
IPP   -2/-1/0/N=WGTED XSECT PRINT         -2        MSCM  EXTRA 1-D X-SECT POSITI
IAP   -1/N ANISN XSECT PRINT              -1

                              FLOATING POINT PARAMETERS
```

Page Added
Oct. 1990

'X15 ASBL, 3.7 W/O U-235, 95%T.D., NORMAL OP.

DATA BLOCK 2 (MIXING TABLE, ETC.)

MIXTURE	MIXING TABLE COMPONENT	ATOM DENSITY	EXTRA XSECT ID'S
1	92235	.86970-003	
1	92238	.22350-001	
1	558016	.46420-001	
2	40000	.42270-001	
3	558016	.33470-001	
3	551001	.66940-001	
1	8016	.10000-014	
1	1001	.10000-014	
1	13027	.10000-014	
1	82000	.10000-014	
1	24000	.10000-014	
1	26000	.10000-014	
1	28000	.10000-014	
1	592235	.10000-014	
1	592238	.10000-014	
2	8016	.10000-014	
2	1001	.10000-014	
2	13027	.10000-014	
2	82000	.10000-014	
2	24000	.10000-014	
2	26000	.10000-014	
2	28000	.10000-014	
2	592235	.10000-014	
2	592238	.10000-014	
3	8016	.10000-014	
3	1001	.10000-014	
3	13027	.10000-014	
3	82000	.10000-014	
3	24000	.10000-014	
3	26000	.10000-014	
3	28000	.10000-014	
3	592235	.10000-014	
3	592238	.10000-014	

FUEL

Page Added
Oct. 1990

XSDRNPM OUTPUT - ZIRC NORMAL OPERATION (Continued)

```
OUTER INNER        BALANCE     UPSCATTER RATIO     EIGENVALUE        LAMBDA1
    1   279   1.0000014+000   1.1643998+000   1.3689112+000   1.4156068+000
    2   438   1.0000014+000   1.0037007+000   1.4199880+000   1.0040045+000   1
    3   521   1.0000014+000   9.9448019-001   1.4233861+000   1.0000900+000   1
    4   592   1.0000014+000   9.9855819-001   1.4217595+000   9.9937648-001   9
    5   648   1.0000014+000   9.9985803-001   1.4213953+000   1.0000648+000   9
    6   633   1.0000014+000   9.9998324-001   1.4213593+000   1.0000052+000   9
GRP.   1 REQUIRED   1 ITERATIONS. MFD OF  2.19266-005 OCCURRED IN INT.  20  COA
GRP.   2 REQUIRED   1 ITERATIONS. MFD OF  1.14907-005 OCCURRED IN INT.  20  COA
GRP.   3 REQUIRED   1 ITERATIONS. MFD OF  1.74324-005 OCCURRED IN INT.  20  COA
GRP.   4 REQUIRED   1 ITERATIONS. MFD OF  2.11005-005 OCCURRED IN INT.  20  COA
GRP.   5 REQUIRED   1 ITERATIONS. MFD OF  1.51664-005 OCCURRED IN INT.  20  COA
GRP.   6 REQUIRED   1 ITERATIONS. MFD OF  1.55552-005 OCCURRED IN INT.  20  COA
GRP.   7 REQUIRED   1 ITERATIONS. MFD OF  1.72174-005 OCCURRED IN INT.  20  COA
GRP.   8 REQUIRED   1 ITERATIONS. MFD OF  2.08914-005 OCCURRED IN INT.   1  COA
GRP.   9 REQUIRED   1 ITERATIONS. MFD OF  2.58451-005 OCCURRED IN INT.   2  COA
GRP.  10 REQUIRED   1 ITERATIONS. MFD OF  2.36221-005 OCCURRED IN INT.   1  COA
GRP.  11 REQUIRED   1 ITERATIONS. MFD OF  2.99193-005 OCCURRED IN INT.  20  COA
GRP.  12 REQUIRED   1 ITERATIONS. MFD OF  3.72575-005 OCCURRED IN INT.  20  COA
GRP.  13 REQUIRED   1 ITERATIONS. MFD OF  3.73544-005 OCCURRED IN INT.  16  COA
GRP.  14 REQUIRED   1 ITERATIONS. MFD OF  3.56158-005 OCCURRED IN INT.  16  COA
GRP.  15 REQUIRED   1 ITERATIONS. MFD OF  5.30689-005 OCCURRED IN INT.   3  COA
GRP.  16 REQUIRED   1 ITERATIONS. MFD OF  5.63336-005 OCCURRED IN INT.   1
GRP.  17 REQUIRED   1 ITERATIONS. MFD OF  4.47040-005 OCCURRED IN INT.  14  COA
GRP.  18 REQUIRED   1 ITERATIONS. MFD OF  4.24325-005 OCCURRED IN INT.  14  COA
GRP.  19 REQUIRED   1 ITERATIONS. MFD OF  3.59833-005 OCCURRED IN INT.  14  COA
GRP.  20 REQUIRED   1 ITERATIONS. MFD OF  4.21391-005 OCCURRED IN INT.   1  COA
GRP.  21 REQUIRED   1 ITERATIONS. MFD OF  4.39209-005 OCCURRED IN INT.  13  COA
GRP.  22 REQUIRED   1 ITERATIONS. MFD OF  2.67022-005 OCCURRED IN INT.  14  COA
GRP.  23 REQUIRED   1 ITERATIONS. MFD OF  1.60542-005 OCCURRED IN INT.  20  COA
GRP.  24 REQUIRED   1 ITERATIONS. MFD OF  1.13174-005 OCCURRED IN INT.  20  COA
GRP.  25 REQUIRED   1 ITERATIONS. MFD OF  6.14099-006 OCCURRED IN INT.   1  COA
GRP.  26 REQUIRED   1 ITERATIONS. MFD OF  2.84598-006 OCCURRED IN INT.   1  COA
GRP.  27 REQUIRED   1 ITERATIONS. MFD OF  2.53511-006 OCCURRED IN INT.  20  COA
    7   715   1.0000014+000   9.9999557-001   1.4213627+000   1.0000054+000   1
        FINAL MINITOR          LAMBDA  1.4213351+000          ANGULAR FLUX ON
 ELAPSED TIME   13.64208329 MIN.
```

Page Added
Oct. 1990

KENO INPUT - ZIRC NORMAL OPERATION

```
SS.KW15
18/87 16:51:19 (28)
4       ONE PWR ASSEMBLY, 3.7 W/O U-235, NORMAL OP.
7      200. 50 405 6 27 27 14 6 14 11 1 1 1 1 -14 1 0 2000 0 1 8Z
4      -1 0 0 3R-1
7      1  -92235 2.616-4  1  92238 6.723-3
6      1   40000 3.673-3  1  551001 4.016-2   1  558016  3.404-2
7      2    8016 3.347-2  2   1001 6.694-2
7      3   24000 1.839-2  3  28000 1.815-3  3  26000 5.994-2
7      4   13027 6.026-2
7      5   32000 3.299-2
7      6  592238 4.773-2  6  -592235 1.052-4
4      BOX TYPE  1
4      CUBOID  1  21.450  0.000  10.725  0.000   1000. -1000. 27*0.5
7      CUBOID  2  21.996 -0.546  11.271  0.000   1000. -1000. 27*0.5
3      CORE BDY  0  11.271 -11.271  11.271 0.00 1000. -1000. 27*0.5
7      ZHEMICYL+Y  2  19.509 1000. -1000. 27*0.5
7      ZHEMICYL+Y  3  19.600 1000. -1000. 27*0.5
7      ZHEMICYL+Y  6  25.309 1000. -1000. 27*0.5
7      ZHEMICYL+Y  5  30.706 1000.  -1000.  27*0.5
7      ZHEMICYL+Y  3  32.93 1000. -1000. 27*0.5
7      ZHEMICYL+Y  2  45.629  1000.  -1000.  27*0.5
7      ZHEMICYL+Y  3  46.264  1000.  -1000.  27*0.5
7      CUBOID  2  63. -63. 63. 0.00 1000. -1000. 27*0.5
5      1  1 1 1  1 1 1  1 1 1  1
4      END KENO.

NONE. TIME:  0.989 SEC. IMAGE COUNT: 24


CONTROL MODE


:RKENO.SUPERKENO
```


Page Added
Oct. 1990

KENO OUTPUT - ZIRC NORMAL OPERATION

```
 ONE PWR ASSEMBLY, 3.7 W/O U-235, NORMAL OP.
NUMBER OF GENERATIONS                    50                    START TYPE
NUMBER PER GENERATION                   405                    GENERATIONS B
NUMBER OF GENERATIONS TO BE SKIPPED       6                    LIST INPUT X-
NUMBER OF ENERGY GROUPS                  27                    LIST 1-D MIXT
MAX. NUMBER OF ENERGY TRANSFERS          27                    LIST 2-D MIXT
NUMBER OF INPUT NUCLIDES                 14                    LIST FISS. AN
NUMBER OF MIXTURES                        6                    USE X-SECTION
NUMBER OF MIXING TABLE ENTRIES           14                    USE GEOMETRY
NUMBER OF GEOMETRY CARDS                 11                    USE VELOCITIE
NUMBER OF BOX TYPES                       1                    COMPUTE MATRI
NUMBER OF UNITS IN X DIRECTION            1                    COMPUTE MATRI
NUMBER OF UNITS IN Y DIRECTION            1                    LIST FISS.C
NUMBER OF UNITS IN Z DIRECTION            1                    ADJOINT CALCL
NUMBER OF NUCLIDES READ FROM TAPE       -14                    USE EXPONENTI
ALBEDO TYPE                               1                    CALCULATE FLL
SEARCH TYPE                               0                    CALCULATE FIS
THIS PROBLEM WILL BE RUN WITH SPECULARLY REFLECTING BOUNDARY CONDITION
THE ALBEDOS ARE +X = 1.00000+000 -X =  .00000     +Y =  .00000     -Y = 1.00000
MAXIMUM TIME = 200.0000 MINUTES
STORAGE LOCATIONS REQUIRED FOR THIS JOB =     19197
REMAINING AVAILABLE LOCATIONS=    130303
```

Page Added
Oct. 1990

```
ONE PWR ASSEMBLY, 3.7 W/O U-235, NORMAL OP.

    MIXTURE  NUCLIDE   DENSITY
       1     -92235   2.61600-004
       1      92238   6.72300-003
       1      40000   3.67300-003
       1     551001   4.01600-002
       1     558016   3.40400-002
       2       8016   3.34700-002
       2       1001   6.69400-002
       3      24000   1.83900-002
       3      28000   1.81500-003
       3      26000   5.99400-002
       4      13027   6.02600-002
       5      82000   3.29900-002
       6     592238   4.77300-002
       6    -592235   1.05200-004


CROSS SECTIONS READ FROM TAPE

NUCLIDE =       1001   H 1269 F, 1002 T 218 GP 032475(2)
NUCLIDE =     551001   H 1269 F, 1002 T 218 GP 032475(2)
NUCLIDE =       8016   O-16 1276 218 GP 030476(7)
NUCLIDE =     558016   O-16 1276 218 GP 030476(7)
NUCLIDE =      13027   AL-27 1193 218 GP 040375(5)
NUCLIDE =      24000   CR 1191 218NGP WT 1/E P-3 293K SIGP=5+4 RE(042375)
NUCLIDE =      26000   FE 218GP RE 5-17-78(1)
NUCLIDE =      28000   NI 1190 218NGP WT 1/E P-3 293K SIGP=5+4 RE(042375)
NUCLIDE =      40000   ZR(NAT) 7141 21 NGP WT FIS(0.1T020)-1/E-MAX P-3
NUCLIDE =      82000   PB   1288 218NGP 042375 P-3 293K
NUCLIDE =      92235   U-235 1261 SIGP=5+4 NEWXLACS 218NGP P-3 293K(3)
NUCLIDE =     592235   U-235 1261 SIGP=5+4 NEWXLACS 218NGP P-3 293K(3)
NUCLIDE =      92238   U-238 218GP RE 5-17-78(1)
NUCLIDE =     592238   U-238 218GP RE 5-17-78(1)
```

KENO OUTPUT - ZIRC NORMAL OPERATION (Continued)

ONE PWR ASSEMBLY, 3.7 W/O U-235, NORMAL OP.

LIFETIME = 1.30201-004 + OR - 1.35872-006 GENERATION TIME = 6.3648

NO. OF INITIAL GENERATIONS SKIPPED	AVERAGE K-EFFECTIVE		DEVIATION	67 PER CENT CONFIDENCE INTERVAL		95 PER CONFIDENCE
6	.92666	+ OR -	.00523	.92142 TO	.93189	.91619 TO
7	.92628	+ OR -	.00534	.92093 TO	.93162	.91559 TO
8	.92690	+ OR -	.00544	.92146 TO	.93233	.91603 TO
9	.92665	+ OR -	.00556	.92109 TO	.93222	.91553 TO
10	.92583	+ OR -	.00564	.92019 TO	.93147	.91454 TO
11	.92731	+ OR -	.00559	.92173 TO	.93290	.91614 TO
12	.92787	+ OR -	.00571	.92216 TO	.93357	.91646 TO
13	.92805	+ OR -	.00586	.92219 TO	.93391	.91633 TO
14	.92916	+ OR -	.00592	.92324 TO	.93507	.91733 TO
15	.92894	+ OR -	.00608	.92286 TO	.93503	.91678 TO
20	.92658	+ OR -	.00616	.92041 TO	.93274	.91425 TO
25	.92358	+ OR -	.00607	.91751 TO	.92965	.91144 TO
30	.92419	+ OR -	.00730	.91689 TO	.93150	.90959 TO
35	.92123	+ OR -	.00891	.91237 TO	.93020	.90346 TO
40	.93001	+ OR -	.01134	.91867 TO	.94135	.90733 TO
45	.93051	+ OR -	.01656	.91395 TO	.94708	.39733 TO

Page Added
Oct. 1990

NITAWL INPUT - ZIRC HYPOTHETICAL ACCIDENT

```
LESS.NW15HA
6/19/87 11:40:39 (21)
 13      1$$ 0 14 5Z 2 2Z -1 0 T
 13      2$$ 92238 -592238  92235 -592235  8016 -558016  1001 -551001
 13          40000 13027 24000 26000 28000 82000
 21     3**   92238 294. 2 .4647 .1462 59.84 2.235-2 1 16 7.67 1 3Z 1.0
 18          592238 294. 0 0.0 0.0 20. 4.773-2 1 3Z 3Z 1.0 T

S: NONE. TIME:  0.222 SEC. IMAGE COUNT: 5


IN CONTROL MODE


AWL.NITAWL
```


Page Added
Oct. 1990

NITAWL OUTPUT - ZIRC HYPOTHETICAL ACCIDENT

```
THIS XSDRN WORKING TAPE WAS CREATED
THE TITLE OF THE PARENT CASE IS AS FOLLOWS
27 NEUTRON GROUP LIBRARY
   BASED ON ENDF/B VERSION 4 DATA
    COMPILED FOR NRC
    TAPE ID                                  4321          NUMBER OF NUCLIDES
    NUMBER OF NEUTRON GROUPS                   27          NUMBER OF GAMMA GROUPS
    FIRST THERMAL GROUP                        15
                                        TABLE OF CONTENTS
  H 1269 F, 1002 T 218 GP 032475(2)
  H 1269 F, 1002 T 218 GP 032475(2)
  O-16 1276 218 GP 030476(7)
  O-16 1276 218 GP 030476(7)
  AL-27 1193 218 GP 040375(5)
  CR 1191 218NGP WT 1/E P-3 293K SIGP=5+4 RE(042375)
  FE 218GP RE 5-17-78(1)
  NI 1190 218NGP WT 1/E P-3 293K SIGP=5+4 RE(042375)
  ZR(NAT) 7141 21 NGP WT FIS(0.1T020)-1/E-MAX P-3
  PB   1238 218NGP 042375 P-3 293K
  U-235 1261 SIGP=5+4 NEWXLACS 218NGP P-3 293K(3)
  U-235 1261 SIGP=5+4 NEWXLACS 218NGP P-3 293K(3)
  U-233 218GP RE 5-17-78(1)
  U-233 218GP RE 5-17-78(1)

RKPT PRINTS
```

Page Added
Oct. 1990

XSDRNPM INPUT - ZIRC HYPOTHETICAL ACCIDENT

```
XW15HA
- 11:59:05 (33)
   WEST 15X15 ASBL, 3.7 W/O U-235, 95%T.D., H.A.
   1$$ 2 3 20 1 3 3 33 8 3 1 2R20 F0
   2$$ -2 F0
   3$$ 1 3Z 1000 2Z 1 F0
   4$$ -1 27 0 -2 E T
   13$$ 3R1 2 2R3 9R1 9R2 9R3
   14$$ 92235 92238 552016 40000 552016 551001
        8016 1001 13027 32000   24000 26000 28000
        592235  592238 209
   15** 3.697-4 2.235-2 4.642-2 4.227-2 3.347-2 6.694-2 F1.-15 T
   33** F1.0 T
   35** 9I0.0 .4647 .4742 7I.5360 0.891
   36$$ 10R1 2R2 8R3
   38** 10R1.0 0.0 F1.0
   39$$ 1 2 3
   40$$ F3
   51$$ 1 2 3 4 5 6 7 8 9 10 11 12 13 14 15 16 17 18 19 20
     21 22 23 24 25 26 27  T

. TIME:  0.242 SEC. IMAGE COUNT: 18

DRNPM
```

XSDRNPM OUTPUT - ZIRC HYPOTHETICAL ACCIDENT

```
GADD,DEP STE*STAINLESS.XW15HA
                                WEST 15X15 ASBL, 3.7 W/O U-235, 95%T.D., H.A.

    1S ARRAY      15 ENTRIES READ

    2S ARRAY      10 ENTRIES READ

    3S ARRAY      12 ENTRIES READ

    4S ARRAY       9 ENTRIES READ

    3T

DIRECT ACCESS FILES ASSIGNED
  3000 WORDS PER RECORD ON UNIT 3          1 PHYSICAL RECORDS PER LOGICAL
   330 WORDS PER RECORD ON UNIT 9         10 PHYSICAL RECORDS PER LOGICAL
  3000 WORDS PER RECORD ON UNIT 10          1 PHYSICAL RECORDS PER LOGICAL

GENERAL PROBLEM DESCRIPTION DATA BLOCK

                                  GENERAL PROBLEM DATA

IGE   1/2/3 = PLANE/CYLINDER/SPHERE        2        ISN   QUADRATURE ORDER
IZM   NUMBER OF ZONES                      3        ISCT  ORDER OF SCATTERING
IM    NUMBER OF SPACIAL INTERVALS         20        IEVT  0/1/2/3/4/5/6=0/K/ALPHA
IBL   0/1/2/3 = VACUUM/REFL/PER/WHITE      1        IIM   INNER ITERATION MAXIMUM
IBR   RIGHT BOUNDARY CONDITION             3        ICM   OUTER ITERATION MA[illegible]
MXX   NUMBER OF MIXTURES                   3        ICLC  -1/0/N--FLAT RES/S[illegible]
MS    MIXING TABLE LENGTH                 23        ITH   0/1 = FORWARD/ADJOINT
IGM   NUMBER OF ENERGY GROUPS             27        IFLU  0/1/2/3/4=L-S/L/S/W/L-W
NNG   NUMBER OF NEUTRON GROUPS            27        IPRT  -2/-1/0/N=MIXTURE XSEC
NGG   NUMBER OF GAMMA GROUPS               0        ID1   0/1/2/3=NO/PRT ND/PCH N
IFTG  NUMBER OF FIRST THERMAL GROUP       15        IPBT  -1/0/1=NONE/FINE/ALL DA

                                  SPECIAL OPTIONS

IFG   0/1 = NONE/WEIGHTING CALCULATION     1        IPN   DUMMY PARAMETER
IQM   VOLUMETRIC SOURCES (0/N=NO/YES)      0        IDFM  0/1 = NONE/DENSITY FACT
IPM   BOUNDARY SOURCES (0/N=NO/YES)        0        IAZ   0/N = NONE/N ACTIVITIES
IFN   0/1/2 = INPUT 33*/34*/USE LAST       0        IAI   0/1=NONE/ACTIVITIES BY
ITMX  MAXIMUM TIME (MINUTES)            1000        IFCT  0/1=NO/YES UPSCATTER SC
IDT1  0/1/2/3=NO/XSECT/SRCE/FLUX--OUT      0        IPVT  0/1/2=NO/K/ALPHA PARAME

                              WEIGHTING DATA (IFG=1)

ICON  -1/0/1=CELL/ZONE/REGION WEIGHT      -1        IHTF  TOTAL XSECT PSN IN BRD
IGMF  NUMBER OF BROAD GROUPS              27        NDSF  PSN G-G OR FILE NUMBER
ITP   0/10/20/30/40 C/C/E/AC/A             0        NUSF  TABLE LENGTH OR MAX ORD
IPP   -1/-1/0/N=WGTED XSECT PRINT         -2        MSCM  EXTRA 1-D X-SECT POSITI
IAP   -1/N ANISN XSECT PRINT              -1
```

(15 ASBL, 3.7 W/O U-235, 95%T.D., H.A.

DATA BLOCK 2 (MIXING TABLE, ETC.)

MIXTURE	MIXING TABLE COMPONENT	ATOM DENSITY	EXTRA XSECT ID'S
1	92235	.86970-003	
1	92238	.22350-001	
1	558016	.46420-001	
2	40000	.42270-001	
3	558016	.33470-001	
3	551001	.66940-001	
1	8016	.10000-014	
1	1001	.10000-014	
1	13027	.10000-014	
1	82000	.10000-014	
1	24000	.10000-014	
1	26000	.10000-014	
1	28000	.10000-014	
1	592235	.10000-014	
1	592238	.10000-014	
2	8016	.10000-014	
2	1001	.10000-014	
2	13027	.10000-014	
2	82000	.10000-014	
2	24000	.10000-014	
2	26000	.10000-014	
2	28000	.10000-014	
2	592235	.10000-014	
2	592238	.10000-014	
3	8016	.10000-014	
3	1001	.10000-014	
3	13027	.10000-014	
3	82000	.10000-014	
3	24000	.10000-014	
3	26000	.10000-014	
3	28000	.10000-014	
3	592235	.10000-014	
3	592238	.10000-014	

Page Added
Oct. 1990

XSDRNPM OUTPUT - ZIRC HYPOTHETICAL ACCIDENT (Continued)

```
OUTER INNER        BALANCE     UPSCATTER RATIO     EIGENVALUE          LAMBDA1
    1   271   1.0000011+000   1.1342761+000   1.3338323+000   1.4428639+000
    2   412   1.0000010+000   1.0066973+000   1.4451531+000   1.0035129+000
    3   494   1.0000010+000   9.9592105-001   1.4500193+000   1.0002437+000
    4   564   1.0000010+000   9.9389382-001   1.4487024+000   9.9995454-001
    5   620   1.0000010+000   9.9989393-001   1.4483556+000   1.0000479+000
    6   661   1.0000010+000   9.9999983-001   1.4483560+000   1.0000304+000
GRP.    1 REQUIRED    1 ITERATIONS. MFD OF  2.26501-005 OCCURRED IN INT.  20  C
GRP.    2 REQUIRED    1 ITERATIONS. MFD OF  9.51393-006 OCCURRED IN INT.  20  C
GRP.    3 REQUIRED    1 ITERATIONS. MFD OF  1.61515-005 OCCURRED IN INT.  20  C
GRP.    4 REQUIRED    1 ITERATIONS. MFD OF  1.73247-005 OCCURRED IN INT.  20  C
GRP.    5 REQUIRED    1 ITERATIONS. MFD OF  1.32375-005 OCCURRED IN INT.  20  C
GRP.    6 REQUIRED    1 ITERATIONS. MFD OF  1.26005-005 OCCURRED IN INT.  20  C
GRP.    7 REQUIRED    1 ITERATIONS. MFD OF  1.34879-005 OCCURRED IN INT.  20  C
GRP.    8 REQUIRED    1 ITERATIONS. MFD OF  1.59865-005 OCCURRED IN INT.   2  C
GRP.    9 REQUIRED    1 ITERATIONS. MFD OF  2.02351-005 OCCURRED IN INT.   1  C
GRP.   10 REQUIRED    1 ITERATIONS. MFD OF  2.29557-005 OCCURRED IN INT.   1  C
GRP.   11 REQUIRED    1 ITERATIONS. MFD OF  2.47899-005 OCCURRED IN INT.   2  C
GRP.   12 REQUIRED    1 ITERATIONS. MFD OF  3.18932-005 OCCURRED IN INT.   1  C
GRP.   13 REQUIRED    1 ITERATIONS. MFD OF  3.33184-005 OCCURRED IN INT.  20  C
GRP.   14 REQUIRED    1 ITERATIONS. MFD OF  3.23696-005 OCCURRED IN INT.  20  C
GRP.   15 REQUIRED    1 ITERATIONS. MFD OF  4.52863-005 OCCURRED IN INT.   1  C
GRP.   16 REQUIRED    1 ITERATIONS. MFD OF  3.06513-005 OCCURRED IN INT.  14  C
GRP.   17 REQUIRED    1 ITERATIONS. MFD OF  3.17733-005 OCCURRED IN INT.  14  C
GRP.   18 REQUIRED    1 ITERATIONS. MFD OF  3.09409-005 OCCURRED IN INT.  14  C
GRP.   19 REQUIRED    1 ITERATIONS. MFD OF  2.63542-005 OCCURRED IN INT.  14  C
GRP.   20 REQUIRED    1 ITERATIONS. MFD OF  3.34931-005 OCCURRED IN INT.   1  C
GRP.   21 REQUIRED    1 ITERATIONS. MFD OF  4.20896-005 OCCURRED IN INT.   2  C
GRP.   22 REQUIRED    1 ITERATIONS. MFD OF  2.20568-005 OCCURRED IN INT.  13  C
GRP.   23 REQUIRED    1 ITERATIONS. MFD OF  8.64732-006 OCCURRED IN INT.  20  C
GRP.   24 REQUIRED    1 ITERATIONS. MFD OF  1.05341-005 OCCURRED IN INT.  20  C
GRP.   25 REQUIRED    1 ITERATIONS. MFD OF  2.17327-006 OCCURRED IN INT.   1  C
GRP.   26 REQUIRED    1 ITERATIONS. MFD OF  1.72435-006 OCCURRED IN INT.  16  C
GRP.   27 REQUIRED    1 ITERATIONS. MFD OF  2.21379-006 OCCURRED IN INT.   1  C
      683   1.0000010+000   1.0000016+000   1.4483741+000   1.0000128+000
      FINAL MINITOR          LAMBDA  1.4483517+000          ANGULAR FLUX ON
 ELAPSED TIME     3.23933332 MIN.
```

Page Added
Oct. 1990

KENO INPUT - ZIRC HYPOTHETICAL ACCIDENT

```
.ESS.KW15HA
/19/87 12:06:14 (61)
60        ONE PWR ASSEMBLY, 3.7 W/O U-235, H.A.
60       200. 50 405 6 27 27 14 6 14 10 1 1 1 1 -14 1 0 2000 0 1 8Z
60       0 0 0 3R-1
60       1  -92235 2.146-4  1  92238 5.514-3
60       1   40000 3.012-3  1  551001 4.497-2   1  558016  3.394-2
60       2    8016 3.347-2  2   1001 6.694-2
60       3   24000 1.839-2  3  28000 1.815-3  3  26000 5.994-2
60       4   13027 6.026-2
60       5   32000 3.299-2
60       6  592238 4.773-2  6  -592235 1.052-4
60       BOX TYPE  1
61       CUBOID  1  11.271 -11.271  11.271  0.000   1000. -1000. 27*0.5
60       CORE BDY  0  11.271 -11.271  11.271 0.00 1000. -1000. 27*0.5
60       ZHEMICYL+Y  2  19.509 1000. -1000. 27*0.5
60       ZHEMICYL+Y  3  19.600 1000. -1000. 27*0.5
60       ZHEMICYL+Y  6  25.309 1000. -1000. 27*0.5
60       ZHEMICYL+Y  5  30.706 1000.  -1000.  27*0.5
         ZHEMICYL+Y  3  32.93 1000. -1000. 27*0.5
         ZHEMICYL+Y  2  45.629  1000.  -1000.  27*0.5
60       ZHEMICYL+Y  3  46.264  1000.  -1000.  27*0.5
60       CUBOID  2  63. -63. 63. 0.00 1000. -1000. 27*0.5
60       1  1 1 1  1 1 1  1 1 1  1
60       END KENO.

 NONE. TIME:  0.331 SEC. IMAGE COUNT: 23


: CONTROL MODE


'ERKENO.SUPERKENO
```


Page Added
Oct. 1990

KENO OUTPUT - ZIRC HYPOTHETICAL ACCIDENT

```
 ONE PWR ASSEMBLY, 3.7 W/O U-235, H.A.
NUMBER OF GENERATIONS                    50                    START TYPE
NUMBER PER GENERATION                   405                    GENERATIONS
NUMBER OF GENERATIONS TO BE SKIPPED       6                    LIST INPUT X
NUMBER OF ENERGY GROUPS                  27                    LIST 1-D MIX
MAX. NUMBER OF ENERGY TRANSFERS          27                    LIST 2-D MIX
NUMBER OF INPUT NUCLIDES                 14                    LIST FISS. A
NUMBER OF MIXTURES                        6                    USE X-SECTIO
NUMBER OF MIXING TABLE ENTRIES           14                    USE GEOMETRY
NUMBER OF GEOMETRY CARDS                 10                    USE VELOCITI
NUMBER OF BOX TYPES                       1                    COMPUTE MATR
NUMBER OF UNITS IN X DIRECTION            1                    COMPUTE MOR
NUMBER OF UNITS IN Y DIRECTION            1                    LIST FISS PR
NUMBER OF UNITS IN Z DIRECTION            1                    ADJOINT CALC
NUMBER OF NUCLIDES READ FROM TAPE       -14                    USE EXPONENT
ALBEDO TYPE                               1                    CALCULATE FL
SEARCH TYPE                               0                    CALCULATE FI
THIS PROBLEM WILL BE RUN WITH SPECULARLY REFLECTING BOUNDARY CONDITION
THE ALBEDOS ARE +X =  .00000     -X =  .00000     +Y =  .00000     -Y = 1.0000
MAXIMUM TIME = 200.0000 MINUTES
STORAGE LOCATIONS REQUIRED FOR THIS JOB =     18913
REMAINING AVAILABLE LOCATIONS=    131007
```

Page Added
Oct. 1990

```
ONE PWR ASSEMBLY, 3.7 W/O U-235, H.A.

    MIXTURE  NUCLIDE   DENSITY
        1     -92235   2.14600-004
        1      92238   5.51430-003
        1      40000   3.01200-003
        1     551001   4.49700-002
        1     553016   3.39400-002
        2       8016   3.34700-002
        2       1001   6.69400-002
        3      24000   1.83900-002
        3      28000   1.81500-003
        3      26000   5.99400-002
        4      13027   6.02600-002
        5      82000   3.29900-002
        6     592238   4.77300-002
        6    -592235   1.05200-004


CROSS SECTIONS READ FROM TAPE

NUCLIDE =       1001   H 1269 F, 1002 T 218 GP 032475(2)
NUCLIDE =     551001   H 1269 F, 1002 T 218 GP 032475(2)
NUCLIDE =       8016   O-16 1276 218 GP 030476(7)
NUCLIDE =     553016   O-16 1276 218 GP 030476(7)
NUCLIDE =      13027   AL-27 1193 213 GP 040375(5)
NUCLIDE =      24000   CR 1191 218NGP WT 1/E P-3 293K SIGP=5+4 RE(042375)
NUCLIDE =      26000   FE 218GP RE 5-17-78(1)
NUCLIDE =      28000   NI 1190 218NGP WT 1/E P-3 293K SIGP=5+4 RE(042375)
NUCLIDE =      40000   ZR(NAT) 7141 21 NGP WT FIS(0.1T020)-1/E-MAX P-3
NUCLIDE =      82000   PB    1288 218NGP 042375 P-3 293K
NUCLIDE =      92235   U-235 1261 SIGP=5+4 NEWXLACS 218NGP P-3 293K(3)
NUCLIDE =     592235   U-235 1261 SIGP=5+4 NEWXLACS 218NGP P-3 293K(3)
NUCLIDE =      92238   U-238 218GP RE 5-17-78(1)
NUCLIDE =     592238   U-238 218GP RE 5-17-78(1)
```

KENO OUTPUT - ZIRC HYPOTHETICAL ACCIDENT (Continued)

ONE PWR ASSEMBLY, 3.7 W/O U-235, H.A.

LIFETIME = 1.25773-004 + OR - 1.23140-006 GENERATION TIME = 6.44495

NO. OF INITIAL GENERATIONS SKIPPED	AVERAGE K-EFFECTIVE		DEVIATION	67 PER CENT CONFIDENCE INTERVAL		95 PER CONFIDENCE
6	.95411	+ OR -	.00497	.94914 TO	.95907	.94417 TO
7	.95202	+ OR -	.00461	.94740 TO	.95663	.94279 TO
8	.95196	+ OR -	.00473	.94724 TO	.95669	.94251 TO
9	.95134	+ OR -	.00484	.94700 TO	.95668	.94216 TO
10	.95194	+ OR -	.00496	.94698 TO	.95690	.94201 TO
11	.95201	+ OR -	.00509	.94692 TO	.95710	.94183 TO
12	.95235	+ OR -	.00521	.94714 TO	.95756	.94192 TO
13	.95194	+ OR -	.00534	.94660 TO	.95728	.9412[illegible]
14	.95274	+ OR -	.00543	.94732 TO	.95817	.94189 TO
15	.95375	+ OR -	.00549	.94326 TO	.95924	.94277 TO
20	.95959	+ OR -	.00543	.95416 TO	.96502	.94873 TO
25	.96104	+ OR -	.00589	.95515 TO	.96693	.94927 TO
30	.95676	+ OR -	.00667	.95009 TO	.96343	.94342 TO
35	.95335	+ OR -	.00773	.94582 TO	.96128	.93808 TO
40	.94324	+ OR -	.00871	.93453 TO	.95195	.92582 TO
45	.94279	+ OR -	.00683	.93594 TO	.94961	.92911 TO

Page Added
Oct. 1990

NITAWL INPUT - STAINLESS NORMAL OPERATION

```
[illegible]
32 75R205 06/19/87 14:40:27 (24)
1.          24      1$$ 0 15 5Z 2 2Z -1 0 T
2.          20      2$$ 92238 -592238  92235 -592235  8016 -558016  1001 -551001
3.          24          40000 13027 24000 26000 -526000 25000 82000
4.          21      3**  92238 294. 2 .4667 .2217 54.66 2.228-2 1 16 7.67 1 3Z 1.0
5.          20          592238 294. 0 0.0 0.0 20. 4.773-2 1 3Z 3Z 1.0 T

-7.  ERRORS: NONE. TIME:  0.305 SEC. IMAGE COUNT: 5


IGNORED - IN CONTROL MODE


421300*NITAWL.NITAWL
```


Page Added
Oct. 1990

NITAWL OUTPUT - STAINLESS NORMAL OPERATION

```
THIS XSDRN WORKING TAPE WAS CREATED
THE TITLE OF THE PARENT CASE IS AS FOLLOWS
27 NEUTRON GROUP LIBRARY
   BASED ON ENDF/B VERSION 4 DATA
    COMPILED FOR NRC
    TAPE ID                                  4321          NUMBER OF NUCLIDES
    NUMBER OF NEUTRON GROUPS                   27          NUMBER OF GAMMA GROUPS
    FIRST THERMAL GROUP                        15
                                       TABLE OF CONTENTS
  H 1269 F, 1002 T 213 GP 032475(2)
  H 1269 F, 1002 T 218 GP 032475(2)
  O-16 1276 213 GP 030476(7)
  O-16 1276 218 GP 030476(7)
  AL-27 1193 218 GP 040375(5)
  CR 1191 218NGP WT 1/E P-3 293K SIGP=5+4 RE(042375)
  FE 213GP RE 5-17-78(1)
  FE 213GP RE 5-17-78(1)
  NI 1190 213NGP WT 1/E P-3 293K SIGP=5+4 RE(042375)
  ZR(NAT) 7141 21 NGP WT FIS(0.1T020)-1/E-MAX P-3
  PB   1288 218NGP 042375 P-3 293K
  U-235 1261 SIGP=5+4 NEWXLACS 213NGP P-3 293K(3)
  U-235 1261 SIGP=5+4 NEWXLACS 218NGP P-3 293K(3)
  U-233 213GP RE 5-17-78(1)
  U-233 218GP RE 5-17-78(1)

BRKPT PRINTS
```

Page Added
Oct. 1990

XSDRNPM INPUT - STAINLESS NORMAL OPERATION

```
ESS.XW15S
19/87 15:04:46 (35)
        WEST 15X15 ASBL, 4.0 W/O U-235, STAINLESS CLAD, NORMAL OP.
        1$$ 2 3 20 1 3 3 33 8 3 1 2R20 F0
        2$$ -2 F0
        3$$ 1 3Z 1000 2Z 1 F0
        4$$ -1 27 0 -2 E T
        13$$ 3R1 2 2R3 9R1 9R2 9R3
        14$$ 92235 92238 553016 526000 553016 551001
             8016 1001 13027 82000   24000 26000 28000
             592235  592238 2Q9
        13** 9.403-4 2.228-2 4.642-2 8.01-2 3.347-2 6.694-2 F1.-15 T
        33** F1.0 T
        35** 9I0.0 .4647 .4742 7I.5360 0.8068
        36$$ 10R1 2R2 8R3
        38** 10R1.0 0.0 F1.0
        39$$ 1 2 3
        40$$ F3
        51$$ 1 2 3 4 5 6 7 8 9 10 11 12 13 14 15 16 17 18 19 20
          21 22 23 24 25 26 27  T

:ONE. TIME:  0.242 SEC. IMAGE COUNT: 18


'.XSDRNPM
```


Page Added
Oct. 1990

XSDRNPM - STAINLESS NORMAL OPERATION

```
@ADD,DEP STE*STAINLESS.XW15S
                                WEST 15X15 ASBL, 4.0 W/O U-235, STAINLESS CLAD, NORM

    1S ARRAY      15 ENTRIES READ

    2S ARRAY      10 ENTRIES READ

    3S ARRAY      12 ENTRIES READ

    4S ARRAY       9 ENTRIES READ

    0T

DIRECT ACCESS FILES ASSIGNED
  3000 WORDS PER RECORD ON UNIT 8          1 PHYSICAL RECORDS PER LOGICAL
   800 WORDS PER RECORD ON UNIT 9         10 PHYSICAL RECORDS PER LOGICAL
  3000 WORDS PER RECORD ON UNIT 10         1 PHYSICAL RECORDS PER LOGICAL

GENERAL PROBLEM DESCRIPTION DATA BLOCK

                                GENERAL PROBLEM DATA

IGE   1/2/3 = PLANE/CYLINDER/SPHERE        2        ISN   QUADRATURE ORDER
IZM   NUMBER OF ZONES                      3        ISCT  ORDER OF SCATTERING
IM    NUMBER OF SPACIAL INTERVALS         20        IEVT  0/1/2/3/4/5/6=Q/K/ALPHA/
IBL   0/1/2/3 = VACUUM/REFL/PER/WHITE     1        IIM   INNER ITERATION MAXIMUM
IBR   RIGHT BOUNDARY CONDITION             3        ICM   OUTER ITERATION MAXI
MXX   NUMBER OF MIXTURES                   3        ICLC  -1/0/N--FLAT RES/SN/
MS    MIXING TABLE LENGTH                 23        ITH   0/1 = FORWARD/ADJOINT
IGM   NUMBER OF ENERGY GROUPS             27        IFLU  0/1/2/3/4=L-S/L/S/W/L-W
NNG   NUMBER OF NEUTRON GROUPS            27        IPRT  -2/-1/0/N=MIXTURE XSEC P
NGG   NUMBER OF GAMMA GROUPS               0        ID1   0/1/2/3=NO/PRT ND/PCH N/
IFTG  NUMBER OF FIRST THERMAL GROUP       15        IPBT  -1/0/1=NONE/FINE/ALL BAL

                                SPECIAL OPTIONS

IFG   0/1 = NONE/WEIGHTING CALCULATION     1        IPN   DUMMY PARAMETER
IQM   VOLUMETRIC SOURCES (0/N=NO/YES)      0        IDFM  0/1 = NONE/DENSITY FACTO
IPM   BOUNDARY SOURCES (0/N=NO/YES)        0        IAZ   0/N = NONE/N ACTIVITIES
IFN.  0/1/2 = INPUT 33*/34*/USE LAST       0        IAI   0/1=NONE/ACTIVITIES BY I
ITMX  MAXIMUM TIME (MINUTES)            1000        IFCT  0/1=NO/YES UPSCATTER SCA
IDT1  0/1/2/3=NO/XSECT/SRCE/FLUX--OUT      0        IPVT  0/1/2=NO/K/ALPHA PARAMET

                                WEIGHTING DATA (IFG=1)

ICON  -1/0/1=CELL/ZONE/REGION WEIGHT      -1        IHTF  TOTAL XSECT PSN IN BRD G
IGMF  NUMBER OF BROAD GROUPS              27        NDSF  PSN G-G OR FILE NUMBER
ITP   0/10/20/30/40 0/C/E/AC/A             0        NUSF  TABLE LENGTH OR MAX ORDE
IPP   -2/-1/0/N=WGTED XSECT PRINT         -2        MSCM  EXTRA 1-D X-SECT POSITIO
IAP   -1/N ANISN XSECT PRINT              -1

                                FLOATING POINT PARAMETERS
```

Page Added
Oct. 1990

3 ASBL, 4.0 W/O U-235, STAINLESS CLAD, NORMAL OP.

DATA BLOCK 2 (MIXING TABLE, ETC.)

MIXTURE	MIXING TABLE COMPONENT	ATOM DENSITY	EXTRA XSECT ID'S
1	92235	.94030-003	
1	92238	.22280-001	
1	558016	.46420-001	
2	526000	.80100-001	
3	558016	.33470-001	
3	551001	.66940-001	
1	8016	.10000-014	
1	1001	.10000-014	
1	13027	.10000-014	
1	82000	.10000-014	
1	24000	.10000-014	
1	26000	.10000-014	
1	28000	.10000-014	
1	592235	.10000-014	
1	592238	.10000-014	
2	8016	.10000-014	
2	1001	.10000-014	
2	13027	.10000-014	
2	82000	.10000-014	
2	24000	.10000-014	
2	26000	.10000-014	
2	28000	.10000-014	
2	592235	.10000-014	
2	592238	.10000-014	
3	8016	.10000-014	
3	1001	.10000-014	
3	13027	.10000-014	
3	82000	.10000-014	
3	24000	.10000-014	
3	26000	.10000-014	
3	28000	.10000-014	
3	592235	.10000-014	
3	592238	.10000-014	

XSDRNPM OUTPUT - STAINLESS NORMAL OPERATION (Continued)

```
OUTER INNER        BALANCE     UPSCATTER RATIO     EIGENVALUE          LAMBDA1
    1   279    1.0000014+000    1.1426466+000    1.2934284+000    1.3251336+000
    2   424    1.0000014+000    1.0011651+000    1.3294693+000    1.0034903+000
    3   500    1.0000014+000    9.9362516-001    1.3316592+000    1.0001303+000
    4   571    1.0000014+000    9.9835870-001    1.3302430+000    9.9989019-001
    5   628    1.0000014+000    9.9982852-001    1.3299635+000    1.0000816+000
    6   669    1.0000014+000    9.9993499-001    1.3299539+000    1.0000241+000
GRP.   1 REQUIRED    1 ITERATIONS. MFD OF  2.16023-005 OCCURRED IN INT.  20  CC
GRP.   2 REQUIRED    1 ITERATIONS. MFD OF  1.08659-005 OCCURRED IN INT.  20  CO
GRP.   3 REQUIRED    1 ITERATIONS. MFD OF  1.76437-005 OCCURRED IN INT.  20  CC
GRP.   4 REQUIRED    1 ITERATIONS. MFD OF  2.03545-005 OCCURRED IN INT.  20  CO
GRP.   5 REQUIRED    1 ITERATIONS. MFD OF  1.48687-005 OCCURRED IN INT.  20  CC
GRP.   6 REQUIRED    1 ITERATIONS. MFD OF  1.50689-005 OCCURRED IN INT.  20  CO
GRP.   7 REQUIRED    1 ITERATIONS. MFD OF  1.67806-005 OCCURRED IN INT.  20  CO
GRP.   8 REQUIRED    1 ITERATIONS. MFD OF  1.98332-005 OCCURRED IN INT.   1  CC
GRP.   9 REQUIRED    1 ITERATIONS. MFD OF  2.59465-005 OCCURRED IN INT.   1  CO
GRP.  10 REQUIRED    1 ITERATIONS. MFD OF  2.94334-005 OCCURRED IN INT.   1  CO
GRP.  11 REQUIRED    1 ITERATIONS. MFD OF  3.11602-005 OCCURRED IN INT.   2  CC
GRP.  12 REQUIRED    1 ITERATIONS. MFD OF  3.98160-005 OCCURRED IN INT.  20  CO
GRP.  13 REQUIRED    1 ITERATIONS. MFD OF  4.22388-005 OCCURRED IN INT.  20  CO
GRP.  14 REQUIRED    1 ITERATIONS. MFD OF  4.12007-005 OCCURRED IN INT.  20  CO
GRP.  15 REQUIRED    1 ITERATIONS. MFD OF  5.53696-005 OCCURRED IN INT.   2  CC
GRP.  16 REQUIRED    1 ITERATIONS. MFD OF  4.12413-005 OCCURRED IN INT.  14  CC
GRP.  17 REQUIRED    1 ITERATIONS. MFD OF  4.26836-005 OCCURRED IN INT.  14
GRP.  18 REQUIRED    1 ITERATIONS. MFD OF  4.15376-005 OCCURRED IN INT.  14
GRP.  19 REQUIRED    1 ITERATIONS. MFD OF  3.49234-005 OCCURRED IN INT.  14  CC
GRP.  20 REQUIRED    1 ITERATIONS. MFD OF  4.37999-005 OCCURRED IN INT.   1  CO
GRP.  21 REQUIRED    1 ITERATIONS. MFD OF  4.57831-005 OCCURRED IN INT.  13  CC
GRP.  22 REQUIRED    1 ITERATIONS. MFD OF  2.72770-005 OCCURRED IN INT.  14  CC
GRP.  23 REQUIRED    1 ITERATIONS. MFD OF  2.30833-005 OCCURRED IN INT.  20  CO
GRP.  24 REQUIRED    1 ITERATIONS. MFD OF  1.07240-005 OCCURRED IN INT.  20  CO
GRP.  25 REQUIRED    1 ITERATIONS. MFD OF  7.91199-006 OCCURRED IN INT.  20  CO
GRP.  26 REQUIRED    1 ITERATIONS. MFD OF  3.32027-006 OCCURRED IN INT.   1  CO
GRP.  27 REQUIRED    1 ITERATIONS. MFD OF  2.53561-006 OCCURRED IN INT.  20  CC
    7   696    1.0000014+000    9.9999621-001    1.3299680+000    1.0000127+000
        FINAL MINITOR            LAMBDA  1.3299434+000            ANGULAR FLUX ON
 ELAPSED TIME     2.61430330 MIN.
```

Page Added
Oct. 1990

KENO INPUT - STAINLESS NORMAL OPERATION

```
ESS.KW15S
/01/87 09:04:51 (61)
60       ONE PWR ASSEMBLY, 4.0 W/O U-235, NORMAL OP., STAINLESS CLAD
61      200. 50 501 6 27 27 14 6 14 11 1 1 1 1 -14 1 0 2000 0 1 BZ
60      -1 0 0 3R-1
60      1  -92235 3.107-4  1  92238 7.361-3
60      1   526000 4.880-3  1  551001 3.946-2   1  558016  3.506-2
60      2     8016 3.347-2  2    1001 6.694-2
60      3   24000 1.339-2  3  28000 1.315-3  3  26000 5.994-2
60      4   13027 6.026-2
60      5   82000 3.299-2
60      6  592238 4.773-2  6  -592235 1.052-4
60      BOX TYPE  1
60      CUBOID  1  21.450  0.000  10.725  0.000   1000. -1000. 27*0.5
60      CUBOID  2  21.996 -0.546  11.271  0.000   1000. -1000. 27*0.5
60      CORE BDY  0  11.271 -11.271  11.271 0.00 1000. -1000. 27*0.5
60      ZHEMICYL+Y  2  19.509 1000. -1000. 27*0.5
60      ZHEMICYL+Y  3  19.600 1000. -1000. 27*0.5
60      ZHEMICYL+Y  6  25.309 1000. -1000. 27*0.5
60      ZHEMICYL+Y  5  30.706 1000.  -1000.  27*0.5
60      ZHEMICYL+Y  3  32.93 1000. -1000. 27*0.5
60      ZHEMICYL+Y  2  45.629  1000.  -1000.  27*0.5
60      ZHEMICYL+Y  3  46.264  1000.  -1000.  27*0.5
60      CUBOID  2  63. -63. 63. 0.00 1000. -1000. 27*0.5
60      1  1 1 1  1 1 1  1 1 1  1
60      END KENO.

 NONE. TIME:  0.417 SEC. IMAGE COUNT: 24


! CONTROL MODE


'ERKENO.SUPERKENO
```


Page Added
Oct. 1990

KENO OUTPUT - STAINLESS NORMAL OPERATION

```
 ONE PWR ASSEMBLY, 4.0 W/O U-235, NORMAL OP., STAINLESS CLAD
NUMBER OF GENERATIONS                          50                    START TYPE
NUMBER PER GENERATION                         501                    GENERATIONS
NUMBER OF GENERATIONS TO BE SKIPPED             6                    LIST INPUT X
NUMBER OF ENERGY GROUPS                        27                    LIST 1-D MIX
MAX. NUMBER OF ENERGY TRANSFERS                27                    LIST 2-D MIX
NUMBER OF INPUT NUCLIDES                       14                    LIST FISS. A
NUMBER OF MIXTURES                              6                    USE X-SECTIO
NUMBER OF MIXING TABLE ENTRIES                 14                    USE GEOMETRY
NUMBER OF GEOMETRY CARDS                       11                    USE VELOCITI
NUMBER OF BOX TYPES                             1                    COMPUTE MATR
NUMBER OF UNITS IN X DIRECTION                  1                    COMPUTE M
NUMBER OF UNITS IN Y DIRECTION                  1                    LIST FISS PR
NUMBER OF UNITS IN Z DIRECTION                  1                    ADJOINT CALC
NUMBER OF NUCLIDES READ FROM TAPE             -14                    USE EXPONENT
ALBEDO TYPE                                     1                    CALCULATE FL
SEARCH TYPE                                     0                    CALCULATE FI
THIS PROBLEM WILL BE RUN WITH SPECULARLY REFLECTING BOUNDARY CONDITION
THE ALBEDOS ARE +X = 1.00000+000 -X =  .00000     +Y =  .00000     -Y = 1.0000
MAXIMUM TIME = 200.0000 MINUTES
STORAGE LOCATIONS REQUIRED FOR THIS JOB =      20637
REMAINING AVAILABLE LOCATIONS=     272363
```

Page Added
Oct. 1990

ONE PWR ASSEMBLY, 4.0 W/O U-235, NORMAL OP., STAINLESS CLAD

MIXTURE	NUCLIDE	DENSITY
1	-92235	3.10700-004
1	92238	7.36100-003
1	526000	4.88000-003
1	551001	3.94600-002
1	558016	3.50600-002
2	8016	3.34700-002
2	1001	6.69400-002
3	24000	1.83900-002
3	28000	1.81500-003
3	26000	5.99400-002
4	13027	6.02600-002
5	82000	3.29900-002
6	592238	4.77300-002
6	-592235	1.05200-004

CROSS SECTIONS READ FROM TAPE

```
NUCLIDE =      1001   H 1269 F, 1002 T 218 GP 032475(2)
NUCLIDE =    551001   H 1269 F, 1002 T 218 GP 032475(2)
NUCLIDE =      8016   O-16 1276 218 GP 030476(7)
NUCLIDE =    558016   O-16 1276 218 GP 030476(7)
NUCLIDE =     13027   AL-27 1193 218 GP 040375(5)
NUCLIDE =     24000   CR 1191 218NGP WT 1/E P-3 293K SIGP=5+4 RE(042375)
NUCLIDE =     26000   FE 213GP RE 5-17-78(1)
NUCLIDE =    526000   FE 213GP RE 5-17-78(1)
NUCLIDE =     28000   NI 1190 218NGP WT 1/E P-3 293K SIGP=5+4 RE(042375)
NUCLIDE =     82000   PB   1288 218NGP 042375 P-3 293K
NUCLIDE =     92235   U-235 1261 SIGP=5+4 NEWXLACS 218NGP P-3 293K(3)
NUCLIDE =    592235   U-235 1261 SIGP=5+4 NEWXLACS 218NGP P-3 293K(3)
NUCLIDE =     92238   U-238 218GP RE 5-17-78(1)
NUCLIDE =    592238   U-238 218GP RE 5-17-78(1)
```


Page Added
Oct. 1990

KENO OUTPUT - STAINLESS NORMAL OPERATION (Continued)

ONE PWR ASSEMBLY, 4.0 W/O U-235, NORMAL OP., STAINLESS CLAD

LIFETIME = 1.23723-004 + OR - 1.32370-006 GENERATION TIME = 5.36435

NO. OF INITIAL GENERATIONS SKIPPED	AVERAGE K-EFFECTIVE		DEVIATION	67 PER CENT CONFIDENCE INTERVAL		95 PER CONFIDENCE
5	.90339	+ OR -	.00416	.89973 TO	.90805	.89557 TO
6	.90360	+ OR -	.00425	.89935 TO	.90784	.89510 TO
7	.90362	+ OR -	.00435	.89927 TO	.90797	.89492 TO
8	.90378	+ OR -	.00445	.89932 TO	.90823	.89487 TO
10	.90413	+ OR -	.00455	.89958 TO	.90868	.89503 TO
11	.90433	+ OR -	.00466	.89967 TO	.90900	.89500 TO
12	.90387	+ OR -	.00477	.89911 TO	.90864	.89434 TO
13	.90332	+ OR -	.00486	.89846 TO	.90819	.89360
14	.90354	+ OR -	.00500	.89854 TO	.90853	.89354 TO
15	.90521	+ OR -	.00484	.90037 TO	.91005	.89552 TO
20	.90633	+ OR -	.00540	.90093 TO	.91173	.89557 TO
25	.90932	+ OR -	.00585	.90348 TO	.91517	.89763 TO
30	.90572	+ OR -	.00663	.89909 TO	.91235	.89246 TO
35	.90529	+ OR -	.00697	.89833 TO	.91226	.89776 TO
40	.90133	+ OR -	.00684	.89449 TO	.90817	.88764 TO
45	.90431	+ OR -	.00589	.89842 TO	.91020	.89252 TO

Page Added
Oct. 1990

NITAWL INPUT - STAINLESS HYPOTHETICAL ACCIDENT

```
:NLESS.NW15SHA
 07/01/87 12:02:14 (21)
   21        1$$ 0 15 5Z 2 2Z -1 0 T
   21        2$$ 92238 -592238  92235 -592235  8016 -558016  1001 -551001
   21            40000 13027 24000 26000 -526000 28000 82000
   21       3**   92238 294. 2 .4647 .1521 57.87 2.228-2 1 16 7.67 1 3Z 1.0
   21            592238 294. 0 0.0 0.0 20. 4.773-2 1 3Z 3Z 1.0 T

:S: NONE. TIME:  0.223 SEC. IMAGE COUNT: 5


 IN CONTROL MODE


'AWL.NITAWL
```


Page Added
Oct. 1990

NITAWL OUTPUT - STAINLESS HYPOTHETICAL ACCIDENT

```
THIS XSDRN WORKING TAPE WAS CREATED
THE TITLE OF THE PARENT CASE IS AS FOLLOWS
27 NEUTRON GROUP LIBRARY
   BASED ON ENDF/B VERSION 4 DATA
    COMPILED FOR NRC
    TAPE ID                                  4321          NUMBER OF NUCLIDES
    NUMBER OF NEUTRON GROUPS                   27          NUMBER OF GAMMA GROUPS
    FIRST THERMAL GROUP                        15
                                        TABLE OF CONTENTS
  H 1269 F, 1002 T 213 GP 032475(2)
  H 1269 F, 1002 T 213 GP 032475(2)
  O-16 1276 213 GP 030476(7)
  O-16 1276 213 GP 030476(7)
  AL-27 1193 213 GP 040375(5)
  CR 1191 213NGP WT 1/E P-3 293K SIGP=5+4 RE(042375)
  FE 213GP RE 5-17-73(1)
  FE 213GP RE 5-17-73(1)
  NI 1190 213NGP WT 1/E P-3 293K SIGP=5+4 RE(042375)
  ZR(NAT) 7141 21 NGP WT FIS(0.1TO20)-1/E-MAX P-3
  PB   1238 213NGP 042375 P-3 293K
  U-235 1261 SIGP=5+4 NEWXLACS 213NGP P-3 293K(3)
  U-235 1261 SIGP=5+4 NEWXLACS 213NGP P-3 293K(3)
  U-238 218GP RE 5-17-73(1)
  U-238 218GP RE 5-17-73(1)

CBRKPT PRINTS
```

Page Added
Oct. 1990

XSDRNPM INPUT - STAINLESS HYPOTHETICAL ACCIDENT

```
.ESS.XW15SHA
'01/87 12:21:05 (33)
'3        WEST 15X15 ASBL, 4.0 W/O U-235, STAINLESS CLAD, H.A.
'3        1$$ 2 3 20 1 3 3 33 8 3 1 2R20 F0
'3        2$$ -2 F0
'3        3$$ 1 3Z 1000 2Z 1 F0
'3        4$$ -1 27 0 -2 E T
'3        13$$ 3R1 2 2R3 9R1 9R2 9R3
'3        14$$ 92235 92238 558016 526000 556016 551001
'3             8016 1001 13027 82000   24000 26000 28000
'3             592235  592238 209
'3        15** 9.403-4 2.228-2 4.642-2 8.01-2 3.347-2 6.694-2 F1.-15 T
'3        33** F1.0 T
'3        35** 9I0.0 .4647 .4742 7I.5360 0.891
'3        36$$ 10R1 2R2 8R3
'3        38** 10R1.0 0.0 F1.0
'3        39$$ 1 2 3
'3        40$$ F3
'3        51$$ 1 2 3 4 5 6 7 8 9 10 11 12 13 14 15 16 17 18 19 20
'3          21 22 23 24 25 26 27  T.

NONE. TIME:  0.243 SEC. IMAGE COUNT: 18

PM.XSDRNPM
```

XSDRNPM OUTPUT - STAINLESS HYPOTHETICAL ACCIDENT

```
BADD,DEP STE*STAINLESS.XW15SHA
                                WEST 15X15 ASBL, 4.0 W/O U-235, STAINLESS CLAD, H.A.

    1S ARRAY      15 ENTRIES READ

    2S ARRAY      10 ENTRIES READ

    3S ARRAY      12 ENTRIES READ

    4S ARRAY       9 ENTRIES READ

    3T

DIRECT ACCESS FILES ASSIGNED
  7000 WORDS PER RECORD ON UNIT 3          1 PHYSICAL RECORDS PER LOGICAL
   330 WORDS PER RECORD ON UNIT 9         10 PHYSICAL RECORDS PER LOGICAL
  7000 WORDS PER RECORD ON UNIT 10         1 PHYSICAL RECORDS PER LOGICAL

GENERAL PROBLEM DESCRIPTION DATA BLOCK

                                GENERAL PROBLEM DATA

IGE   1/2/3 = PLANE/CYLINDER/SPHERE        2        ISN   QUADRATURE ORDER
IZM   NUMBER OF ZONES                      3        ISCT  ORDER OF SCATTERING
IM    NUMBER OF SPACIAL INTERVALS         20        IEVT  0/1/2/3/4/5/6=Q/K/ALPHA/
IBL   0/1/2/3 = VACUUM/REFL/PER/WHITE      1        IIM   INNER ITERATION MAXIMUM
IBR   RIGHT BOUNDARY CONDITION             3        ICM   OUTER ITERATION MAX
MXX   NUMBER OF MIXTURES                   3        ICLC  -1/0/N--FLAT RES/SN/
MS    MIXING TABLE LENGTH                 33        ITH   0/1 = FORWARD/ADJOINT
IGM   NUMBER OF ENERGY GROUPS             27        IFLU  0/1/2/3/4=L-S/L/S/W/L-W
NNG   NUMBER OF NEUTRON GROUPS            27        IPRT  -2/-1/0/N=MIXTURE XSEC P
NGG   NUMBER OF GAMMA GROUPS               0        ID1   0/1/2/3=NO/PRT NO/PCH N/
IFTG  NUMBER OF FIRST THERMAL GROUP       15        IPBT  -1/0/1=NONE/FINE/ALL BAL

                                SPECIAL OPTIONS

IFG   0/1 = NONE/WEIGHTING CALCULATION     1        IPN   DUMMY PARAMETER
IQM   VOLUMETRIC SOURCES (0/N=NO/YES)      0        IDFM  0/1 = NONE/DENSITY FACTO
IPM   BOUNDARY SOURCES (0/N=NO/YES)        0        IAZ   0/N = NONE/N ACTIVITIES
IFN   0/1/2 = INPUT 33*/34*/USE LAST       0        IAI   0/1=NONE/ACTIVITIES BY :
ITMX  MAXIMUM TIME (MINUTES)            1000        IFCT  0/1=NO/YES UPSCATTER SC:
IDT1  0/1/2/3=NO/XSECT/SRCE/FLUX--OUT      0        IPVT  0/1/2=NO/K/ALPHA PARAME

                                WEIGHTING DATA (IFG=1)

ICON  -1/0/1=CELL/ZONE/REGION WEIGHT      -1        IHTF  TOTAL XSECT PSN IN BRD :
IGMF  NUMBER OF BROAD GROUPS              27        NDSF  PSN G-G OR FILE NUMBER
ITP   0/10/20/30/40 0/C/E/AC/A             0        NUSF  TABLE LENGTH OR MAX ORDE
IPP   -2/-1/0/N=WGTED XSECT PRINT         -2        MSCM  EXTRA 1-D X-SECT POSITI:
IAP   -1/N ANISN XSECT PRINT              -1

                                FLOATING POINT PARAMETERS
```

Page Added
Oct. 1990

!F ASBL, 4.0 W/O U-235, STAINLESS CLAD, H.A.

DATA BLOCK 2 (MIXING TABLE, ETC.)

MIXTURE	MIXING TABLE COMPONENT	ATOM DENSITY	EXTRA XSECT ID'S
1	92235	.94030-003	
1	92238	.22280-001	
1	553016	.46420-001	
2	526000	.80100-001	
3	558016	.33470-001	
3	551001	.66940-001	
1	8016	.10000-014	
1	1001	.10000-014	
1	13027	.10000-014	
1	32000	.10000-014	
1	24000	.10000-014	
1	26000	.10000-014	
1	28000	.10000-014	
1	592235	.10000-014	
1	592238	.10000-014	
2	8016	.10000-014	
2	1001	.10000-014	
2	13027	.10000-014	
2	32000	.10000-014	
2	24000	.10000-014	
2	26000	.10000-014	
2	28000	.10000-014	
2	592235	.10000-014	
2	592238	.10000-014	
3	8016	.10000-014	
3	1001	.10000-014	
3	13027	.10000-014	
3	32000	.10000-014	
3	24000	.10000-014	
3	26000	.10000-014	
3	28000	.10000-014	
3	592235	.10000-014	
3	592238	.10000-014	

Page Added
Oct. 1990

XSDRNPM OUTPUT - STAINLESS HYPOTHETICAL ACCIDENT (Continued)

```
OUTER INNER        BALANCE     UPSCATTER RATIO     EIGENVALUE        LAMBDA1
    1   276   1.0000011+000   1.1732834+000   1.3066863+000   1.3500972+000
    2   415   1.0000010+000   1.0060307+000   1.3530315+000   1.0035961+000
    3   496   1.0000010+000   9.9542741-001   1.3567732+000   1.0002533+000
    4   564   1.0000010+000   9.9875232-001   1.3556230+000   9.9994114-001
    5   620   1.0000010+000   9.9987601-001   1.3553561+000   1.0000669+000
    6   661   1.0000010+000   9.9998923-001   1.3553326+000   1.0000091+000
GRP.    1 REQUIRED    1 ITERATIONS. MFD OF  1.92031-005 OCCURRED IN INT.  20  C
GRP.    2 REQUIRED    1 ITERATIONS. MFD OF  9.83198-006 OCCURRED IN INT.  20  C
GRP.    3 REQUIRED    1 ITERATIONS. MFD OF  1.40503-005 OCCURRED IN INT.  20  C
GRP.    4 REQUIRED    1 ITERATIONS. MFD OF  1.53691-005 OCCURRED IN INT.  20  C
GRP.    5 REQUIRED    1 ITERATIONS. MFD OF  1.52750-005 OCCURRED IN INT.  20  C
GRP.    6 REQUIRED    1 ITERATIONS. MFD OF  1.44143-005 OCCURRED IN INT.  20  C
GRP.    7 REQUIRED    1 ITERATIONS. MFD OF  1.52138-005 OCCURRED IN INT.  20  C
GRP.    8 REQUIRED    1 ITERATIONS. MFD OF  1.70943-005 OCCURRED IN INT.   2  C
GRP.    9 REQUIRED    1 ITERATIONS. MFD OF  2.16135-005 OCCURRED IN INT.   1  C
GRP.   10 REQUIRED    1 ITERATIONS. MFD OF  2.39839-005 OCCURRED IN INT.   2  C
GRP.   11 REQUIRED    1 ITERATIONS. MFD OF  2.51603-005 OCCURRED IN INT.   1  C
GRP.   12 REQUIRED    1 ITERATIONS. MFD OF  3.21919-005 OCCURRED IN INT.  20  C
GRP.   13 REQUIRED    1 ITERATIONS. MFD OF  3.33969-005 OCCURRED IN INT.  20  C
GRP.   14 REQUIRED    1 ITERATIONS. MFD OF  3.28163-005 OCCURRED IN INT.  19  C
GRP.   15 REQUIRED    1 ITERATIONS. MFD OF  5.17172-005 OCCURRED IN INT.   2  C
GRP.   16 REQUIRED    1 ITERATIONS. MFD OF  3.36018-005 OCCURRED IN INT.  14  C
GRP.   17 REQUIRED    1 ITERATIONS. MFD OF  3.99649-005 OCCURRED IN INT.  14  C
GRP.   18 REQUIRED    1 ITERATIONS. MFD OF  3.88444-005 OCCURRED IN INT.  14  C
GRP.   19 REQUIRED    1 ITERATIONS. MFD OF  3.28551-005 OCCURRED IN INT.  14  C
GRP.   20 REQUIRED    1 ITERATIONS. MFD OF  4.18073-005 OCCURRED IN INT.   1  C
GRP.   21 REQUIRED    1 ITERATIONS. MFD OF  4.70205-005 OCCURRED IN INT.  13  C
GRP.   22 REQUIRED    1 ITERATIONS. MFD OF  2.57851-005 OCCURRED IN INT.  14  C
GRP.   23 REQUIRED    1 ITERATIONS. MFD OF  1.37101-005 OCCURRED IN INT.  20  C
GRP.   24 REQUIRED    1 ITERATIONS. MFD OF  1.23396-005 OCCURRED IN INT.  20  C
GRP.   25 REQUIRED    1 ITERATIONS. MFD OF  5.54742-006 OCCURRED IN INT.   2  C
GRP.   26 REQUIRED    1 ITERATIONS. MFD OF  1.64554-006 OCCURRED IN INT.   1  C
GRP.   27 REQUIRED    1 ITERATIONS. MFD OF  1.40885-006 OCCURRED IN INT.  13  C
      623   1.0000010+000   9.9999553-001   1.3553297+000   9.9999919-001
      FINAL MINITOR          LAMBDA  1.3553076+000          ANGULAR FLUX ON
 ELAPSED TIME    2.67223332 MIN.
```

Page Added
Oct. 1990

KENO INPUT - STAINLESS HYPOTHETICAL ACCIDENT

```
ESS.KW15SHA
'01/87 12:27:00 (60)
60      ONE PWR ASSEMBLY, 4.0 W/O U-235, H.A., STAINLESS CLAD
60      200. 50 405 6 27 27 14 6 14 10 1 1 1 1 -14 1 0 2000 0 1 8Z
60      0 0 0 3R-1
60      1  -92235 2.548-4  1  92238 6.037-3
60      1   526000 4.003-3  1  551001 4.440-2   1  558016  3.478-2
60      2    8016 3.347-2  2   1001 6.694-2
60      3   24000 1.839-2  3  28000 1.815-3  3  26000 5.994-2
60      4   13027 6.026-2
60      5   82000 3.299-2
60      6  592238 4.773-2  6  -592235 1.052-4
60      BOX TYPE  1
60      CUBOID  1  11.271 -11.271  11.271  0.000   1000. -1000. 27*0.5
60      CORE BDY  0  11.271 -11.271  11.271 0.00 1000. -1000. 27*0.5
60      ZHEMICYL+Y  2  19.509 1000. -1000. 27*0.5
60      ZHEMICYL+Y  3  19.600 1000. -1000. 27*0.5
60      ZHEMICYL+Y  6  25.309 1000. -1000. 27*0.5
60      ZHEMICYL+Y  5  30.706 1000.  -1000.  27*0.5
60      ZHEMICYL+Y  3  32.93 1000. -1000. 27*0.5
60      ZHEMICYL+Y  2  45.629  1000.  -1000.  27*0.5
60      ZHEMICYL+Y  3  46.264  1000.  -1000.  27*0.5
60      CUBOID  2  63. -63. 63. 0.00 1000. -1000. 27*0.5
60      1  1 1 1  1 1 1  1 1 1  1
60      END KENO.

 NONE. TIME:  0.293 SEC. IMAGE COUNT: 23


 CONTROL MODE


ERKENO.SUPERKENO
```


Page Added
Oct. 1990

KENO OUTPUT - STAINLESS HYPOTHETICAL ACCIDENT

```
 ONE PWR ASSEMBLY, 4.0 W/O U-235, H.A., STAINLESS CLAD
NUMBER OF GENERATIONS                        50                    START TYPE
NUMBER PER GENERATION                       405                    GENERATIONS
NUMBER OF GENERATIONS TO BE SKIPPED           6                    LIST INPUT
NUMBER OF ENERGY GROUPS                      27                    LIST 1-D MI
MAX. NUMBER OF ENERGY TRANSFERS              27                    LIST 2-D MI
NUMBER OF INPUT NUCLIDES                     14                    LIST FISS.
NUMBER OF MIXTURES                            6                    USE X-SECTI
NUMBER OF MIXING TABLE ENTRIES               14                    USE GEOMETR
NUMBER OF GEOMETRY CARDS                     10                    USE VELOCIT
NUMBER OF BOX TYPES                           1                    COMPUTE MAT
NUMBER OF UNITS IN X DIRECTION                1                    COMPUTE MAT
NUMBER OF UNITS IN Y DIRECTION                1                    LIST FI
NUMBER OF UNITS IN Z DIRECTION                1                    ADJOINT CAL
NUMBER OF NUCLIDES READ FROM TAPE           -14                    USE EXPONEN
ALBEDO TYPE                                   1                    CALCULATE FL
SEARCH TYPE                                   0                    CALCULATE F
THIS PROBLEM WILL BE RUN WITH SPECULARLY REFLECTING BOUNDARY CONDITION
THE ALBEDOS ARE +X =  .00000     -X =  .00000     +Y =  .00000     -Y = 1.0000
MAXIMUM TIME = 200.0000 MINUTES
STORAGE LOCATIONS REQUIRED FOR THIS JOB =      13913
REMAINING AVAILABLE LOCATIONS=    381087
```

Page Added
Oct. 1990

```
ONE PWR ASSEMBLY, 4.0 W/O U-235, H.A., STAINLESS CLAD

    MIXTURE  NUCLIDE   DENSITY
       1     -92235   2.54800-004
       1      92238   6.03700-003
       1     26000    4.00300-003
       1     551001   4.44000-002
       1     558016   3.47800-002
       2       8016   3.34700-002
       2       1001   6.69400-002
       3      24000   1.83900-002
       3      28000   1.81500-003
       3      26000   5.99400-002
       4      13027   6.02600-002
       5      82000   3.29900-002
       6     592238   4.77300-002
       6    -592235   1.05200-004


CROSS SECTIONS READ FROM TAPE

NUCLIDE =       1001   H 1269 F, 1002 T 218 GP 032475(2)
NUCLIDE =     551001   H 1269 F, 1002 T 218 GP 032475(2)
NUCLIDE =       8016   O-16 1276 218 GP 030476(7)
NUCLIDE =     558016   O-16 1276 218 GP 030476(7)
NUCLIDE =      13027   AL-27 1193 218 GP 040375(5)
NUCLIDE =      24000   CR 1191 218NGP WT 1/E P-3 293K SIGP=5+4 RE(042375)
NUCLIDE =      26000   FE 218GP RE 5-17-78(1)
NUCLIDE =     526000   FE 218GP RE 5-17-78(1)
NUCLIDE =      28000   NI 1190 218NGP WT 1/E P-3 293K SIGP=5+4 RE(042375)
NUCLIDE =      32000   PB   1288 218NGP 042375 P-3 293K
NUCLIDE =      92235   U-235 1261 SIGP=5+4 NEWXLACS 218NGP P-3 293K(3)
NUCLIDE =     592235   U-235 1261 SIGP=5+4 NEWXLACS 218NGP P-3 293K(3)
NUCLIDE =      92238   U-238 218GP RE 5-17-78(1)
NUCLIDE =     592238   U-238 218GP RE 5-17-78(1)
```


Page Added
Oct. 1990

KENO OUTPUT - STAINLESS HYPOTHETICAL ACCIDENT (Continued)

ONE PWR ASSEMBLY, 4.0 W/O U-235, H.A., STAINLESS CLAD

LIFETIME = 1.13940-004 + OR - 1.26732-006 GENERATION TIME = 5.2623

NO. OF INITIAL GENERATIONS SKIPPED	AVERAGE K-EFFECTIVE		DEVIATION	67 PER CENT CONFIDENCE INTERVAL		95 PER CONFIDENCE
5	.93540	+ OR -	.00477	.93064 TO	.94017	.92587 TO
6	.93461	+ OR -	.00481	.92980 TO	.93942	.92499 TO
7	.93512	+ OR -	.00490	.93022 TO	.94001	.92532 TO
8	.93505	+ OR -	.00502	.93003 TO	.94007	.92501 TO
10	.93462	+ OR -	.00513	.92950 TO	.93975	.92437 TO
11	.93586	+ OR -	.00510	.93076 TO	.94097	.92565 TO
12	.93682	+ OR -	.00515	.93167 TO	.94196	.92652 TO
13	.93625	+ OR -	.00526	.93099 TO	.94151	.92573
14	.93439	+ OR -	.00522	.92967 TO	.94011	.92444 TO
15	.93255	+ OR -	.00431	.92775 TO	.93736	.92294 TO
20	.93275	+ OR -	.00541	.92734 TO	.93815	.92193 TO
25	.93006	+ OR -	.00603	.92403 TO	.93609	.91801 TO
30	.92469	+ OR -	.00666	.91803 TO	.93135	.91137 TO
35	.92123	+ OR -	.00716	.91412 TO	.92845	.90696 TO
40	.92082	+ OR -	.01015	.91067 TO	.93097	.90052 TO
45	.93476	+ OR -	.01254	.92221 TO	.94730	.90967 TO

Page Added
Oct. 1990

Section XI

SECTION XI

STRUCTURAL ANALYSIS

This page intentionally left blank.

SECTION XI

STRUCTURAL

Table of Contents

		Page
1.0	Normal Conditions of Transport	XI-1-1
1.1	Cask as a Simple Beam	XI-1-1
1.2	External Pressure	XI-1-2
1.3	Pressure Vessel Design-Cask Cavity	XI-1-4
1.4	Water Jacket Expansion Tanks	XI-1-9
1.5	Differential Thermal Expansion	XI-1-12
1.6	Vibration	XI-1-19
1.7	Tie-Down Devices	XI-1-21
1.8	Lifting Devices	XI-1-32
1.9	Pressure Vessel Design-Inner Container	XI-1-37
1.10	Impact Structure - Cask Attachment	XI-1-41
1.11	One Foot Drop	XI-1-43
2.0	Hypothetical Accident Conditions	XI-2-1
2.1	End Impact	XI-2-4
2.2	Corner Impact	XI-2-15
2.3	Side Impact	XI-2-16
2.4	Puncture	XI-2-26
3.0	References	XI-3-1
Appendix A	- Attachment of Bottom Plate	XI-A1
Appendix B	- Analysis of Configuration B	XI-B1
Appendix C	- Analysis of Fuel Rod Fill Pressure Effects	XI-C1
Appendix D	- Supplemental Analysis of Fission Gas Release from High Burnup Assemblies	XI-D1
Appendix E	- Supplemental Analysis of Consolidated Fuel	XI-E1
Appendix F	- Analysis of Configuration C for the Fermi-1 and EBR-II Fuel	XI-F1
Appendix G	- Analysis of Configuration D	XI-G1
Appendix H	- Supplemental Analysis of Configuration D for Failed Metallic Fuel	XI-H1

Revised
Oct. 1990

This page intentionally left blank.

SECTION XI

STRUCTURAL ANALYSIS

The structural analysis for the NLI 1/2 shipping cask is presented in two parts. Part 1.0 analyzes the structural integrity of the shipping cask under normal conditions of shipment as delineated by 10 CFR 71. Part 2.0 of this section analyzes the structural integrity of the shipping cask under the hypothetical accident conditions as delineated by 10 CFR 71, Appendix "B".

1.0 NORMAL CONDITIONS of TRANSPORT

1.1 CASK as a SIMPLE BEAM 10 CFR 71.32(a)

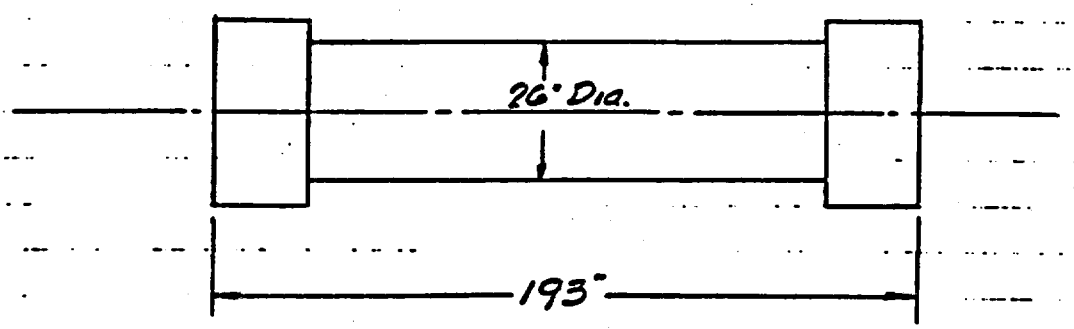

Design weight	48000#
Thickness of outer shell	0.875"
Loading requirement	5g
Outer shell material	Stainless Steel Type 216
Yield strength	55000 psi

Outer shell section modulus $= \frac{\pi}{32} \frac{26^4 - 24.25^4}{26} =$

$Z = \underline{419.71 \text{ in}^3}$

For a uniformly distributed load, the maximum bending moment occurs at the center and equals:

$$M_{max} = \frac{48000 \times 5 \times 193}{8} = \underline{5{,}790{,}000 \text{ in-lb.}}$$

Maximum bending stress in outer shell equals

$$\sigma_B = \frac{M_{max}}{Z} = \frac{5790000}{419.71} = \underline{13795 \text{ psi}}$$

$$M.S. = \frac{55000}{13795} - 1 = \underline{2.987}$$

The requirement of 10CFR 71.32(a), that the yield strength of the cask shall not be exceeded under a distributed load equal to 5 times its fully loaded weight is satisfied.

1.2 External Pressure 10 CFR 71.32 (b)

Requirement: The containment vessel will suffer no loss of contents if subjected to an external pressure of 25 psig.

The removable inner container is the containment vessel. No credit is taken for the support of the containment shell provided by the fuel basket.

Since there is a significant external pressure on the outer shell due to the operating pressure of the water jacket, the outer shell is also checked for adequacy under external pressure.

Containment vessel (Inner Container)

Formulas taken from Ref. 1 Table XIII, Case 1
Shell material - SA-351, CF8M or SA-240, Type 304. or A-358, Class 1

Minimum yield point is 30000 psi for both materials.

$$p' = \frac{t}{R}\left(\frac{S_y}{1+4\frac{S_y}{E}\left(\frac{R}{t}\right)^2}\right)$$

$t = 0.25''$
$R = 6.44''$
$S_y = 30000$ psi
$E = 29 \times 10^6$ psi

$$p' = \frac{0.25}{6.44}\left(\frac{30000}{1+4\frac{30000}{29\times10^6}\left(\frac{6.44}{0.25}\right)^2}\right)$$

$p' = \underline{311.73 \text{ psi}}$

Containment shell is more than adequate to withstand 25 psig external pressure.

<u>Outer Shell</u>

Shell material - Allegheny Ludlum Steel Corp. Type 216 Stainless Steel.

$t = 0.875''$
$R = 12.563''$
$S_y = 55000$ psi
$E = 29 \times 10^6$ psi

$$p' = \frac{0.875}{12.563}\left(\frac{55000}{1+4\frac{55000}{29\times10^6}\left(\frac{12.563}{0.875}\right)^2}\right)$$

$p' = 1493.6$ psi

Outer shell is more than adequate to withstand the water jacket design pressure of 185 psig

1.3 PRESSURE VESSEL DESIGN - CASK CAVITY

See page XI-B2 & B3

DESIGN PRESSURE - Maximum inner container temperature, which occurs during the post fire accident condition, is calculated to be 799°F. To provide an additional margin of safety the design temperature is set at 850°F. The design pressure for the cask cavity is based on the gas pressure developed as a result of the temperature rise from 68°F to the design temperature of 850°F, assuming the gas temperature to be the same as the hot metal temperature. Maximum internal pressure under the fire accident condition would be:

$$P_2 = \frac{P_1 t_2}{t_1} = \frac{15 \times 1310°R}{528°R} = 37.216 \text{ psia.}$$

or <u>22.5 psig Design Pressure</u>

This compares to an allowable shell pressure based on the yield strength of the material at 850°F as follows:

Ref. 1, Table XIII, Case 1

$$P = \frac{t\sigma_y}{R}$$

$t = 0.50"$
$\sigma_y = 16500$ psi Ref. 4
$R = 6.94$

$$P = \frac{0.50 \times 16500}{6.94} = \underline{1188.8 \text{ psi} > 22.5 \text{ psi}}$$

1.3.1 EXTERNAL PRESSURE – INNER CONTAINER @ 850°F

Ref. 1, Table XIII, Case 1

$$p' = \frac{t}{R}\left(\frac{S_y}{1 + 4\frac{S_y}{E}\left(\frac{R}{t}\right)^2}\right)$$

$t = 0.25$
$R = 6.44$
$S_y = 16500$ Ref. 2
$E = 23.7 \times 10^6$ Ref. 2

$$p' = \frac{0.25}{6.44}\left(\frac{16500}{1 + 4\frac{16500}{23.7 \times 10^6}\left(\frac{0.25}{6.44}\right)^2}\right)$$

$p' = \underline{224.8 \text{ psi} > 22.5 \text{ psi}}$

1.3.2 BOTTOM HEAD - CASK CAVITY

Formula from Ref. 2

$$T = d\sqrt{\frac{CP}{S}} \quad ; \quad P = \frac{T^2 S}{d^2 C}$$

$T = 1.225''$
$d = 13.375''$
$S = 16500$ psi
$C = 0.3$

$$P = \frac{(1.225)^2\, 16500}{(13.375)^2\, 0.3} = \underline{461 \text{ psi} > 22.5 \text{ psi}}$$

1.3.3 Outer Closure Head

See page XI-B4

1.3.4 Outer Closure Head Bolts

See page XI-B4

1.3.5 WATER JACKET

The bulk water temperature is calculated to be 331°F. For design purposes use 335°F. The saturation pressure at this temperature is 110 psia. The expansion tank is designed for an operating pressure of 200 psia (185 psig) to accommodate the decrease in volume of the air trapped in the tanks. The design conditions for the neutron water shield system are:

Design metal temperature	400°F
Design pressure	250 psig
Operating pressure	185 psig
Relief valve setting	200 psig

Hoop stress in jacket shell, Ref. 1, Table XIII, Case 1
Shell material – Allegheny Ludlum Steel Corp. Type 216 stainless steel. Yield strength at temperatur is 45900 psi. Allowable stress value based Ref. 2 is 45900 x .666 = 30570 psi

$$\sigma_2 = \frac{pR}{t}$$

$p = 250$ psi
$R = 18.125$
$t = 0.25$

$$\sigma_2 = \frac{(250)(18.125)}{.25} = \underline{18125 \text{ psi}} < \sigma_{all.} = \underline{30570 \text{ psi}}$$

1.4 WATER JACKET EXPANSION TANK.

The water jacket expansion tank is arranged as a separate tank, surrounding the upper part of the water jacket. This arrangement allows a solid water shield to be present around the cask body at all times as the jacket always stays filled, transferring water through a submerged siphon tube as needed. The expansion tank capacity is sufficient to allow complete refill of the jacket at -40°F and still maintain the siphon submergence level in any attitude of handling and transport.

The solution used is Ethylene Glycol, 54% by weight.

SP. GR.	LBS/FT^3	AT
.953	59.467	335°F
1.070	66.768	68°F
1.097	68.453	-40°F

As stated in section 1.3.5, the bulk water design temperature is 335°F and for purposes of structural design the design pressure is 250 psig at 400°F

1.4.1 WATER EXPANSION

JACKET VOLUME.

$$V_J = \pi(18^2-13^2)\,145.75'' + \pi(17.875^2-13.437^2)\,10.5'' + \pi(18^2-13.4375^2)\,2.5'' + \pi(18^2-13.218^2)\,4''$$

$$= \underline{77558 \text{ IN}^3}$$

$$= \underline{45.46 \text{ FT}^3}$$

EXPANSION TANK VOLUME

section area at Top = $\pi/4(46.375^2 - 36.75^2)$ = 628.38 in^2

section area at bottom = $\pi/4(46.375^2 - 36.5^2)$ = 642.76 in^2

Total volume = (628.38) 1.5" + (642.76) 20.0"

V_T = 943. + 12855 = 13798 in^3

The expansion Tank contains a minimum to cover the siphon Tube, plus the overflow from the jacket, and cushioning fill air, all varying in Temperature and pressure.

Reserve volume to cover siphon tube end — 3/4" min. height vertical.

V_R = (642.76) · .75 = 482 in^3

weight of solution in jacket at -40°F

Wt_1 = 45.46 ft^3 (68.453) = 3112 lbs

weight of solution passed from jacket to Tank at 68°F

Wt_2 = 3112 - 45.46 (66.768) = 3112 - 3035.27

= 76.73 lbs.

Vol_2 = 76.73/66.768 = 1.149 ft^3 = 1986 in^3

weight of solution passed at 335°F

Wt_3 = 3112 - 45.46 (59.467) = 3112 - 2703.3

= 408.7 lbs

Vol_3 = 408.7/59.467 = 6.873 ft^3 = 11,877 in^3

AT 68° the Total volume of Tank filled with solution is

Vol_4 = Vol_2 + V_R = 1986 + 482 = 2468 in^3

The net volume filled with air (at 14.7 psia) is

$Vol._5$ = V_T - Vol_4 = 13798 - 2468 = 11,330 in^3

AT 335° The net volume filled with air is

Vol_6 = V_T - Vol_3 - V_R = 13798 - 11877 - 482

= 1439 in^3

1.4.2 TANK WATER FILL AND AIR PRESSURE.

The height of the standpipe to limit the filling of the tank at 68°F is

$$h = \frac{Vol_4}{642.76} = \frac{2468}{642.76} = 3.84'' \qquad \underline{\text{USE } 3\tfrac{7}{8}''}$$

After filling the jacket completely and the tank to $h = 3\tfrac{7}{8}''$, at 68°F, the remaining volume (V_5) in the tank is occupied by air at 14.7 psia and 68°F (528°R)

Upon a temperature rise to 335°F (795°R), the air is compressed to a pressure of

$$P_{335} = (14.7)\left(\frac{Vol_5}{Vol_6}\right)\left(\frac{795°R}{528°R}\right) = 14.7\left(\frac{11330}{1439}\right)\left(\frac{795}{528}\right)$$

$$= 174.3 \text{ psia} = \underline{159.6 \text{ psig}}$$

1.4.3 PRESSURE VESSEL CALCULATIONS

Expansion tank shell. A-240, Type 304 S.S.

From Ref 2, allowable stress at 400°F is 18,700 psi

Required shell thickness

$$t = \frac{PR}{S - .5P} = \frac{250(23.188)}{18700 - .5(250)} \qquad P = 250 \qquad S = 18{,}700$$

$$= .312'' \quad \text{OK} \quad 3/8'' \text{ actual thickness}$$

Expansion tank end plate A240, Type 304 S.S

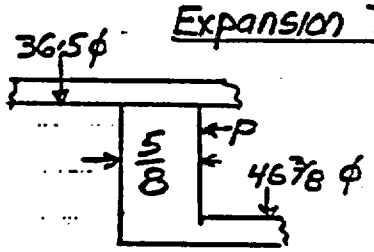

Roark X - case 76 - supported edges.

$a/b = 1.27$ $\qquad a = 23.188$

$\beta = .034$ $\qquad b = 18.75$

$w = 250$ psi

$$\text{max. } S_r = \frac{\beta w a^2}{t^2} = \frac{.034(250)(23.188)^2}{t^2} = 18700$$

$$t^2 = .24438 \qquad t = .494'' \qquad \text{OK} \quad \underline{5/8'' \text{ used.}}$$

1.4.4 PENETRATION - JACKET AND TANK -
(10 CFR 71 - Appendix A)

Impact is from a 1¼" dia. steel bar, weighing 13 lbs, and dropped from a height of 40 inches upon the exposed surface of the jacket or tank at the most vulnerable point.

K.E. of impact = (13 lbs)(40 in) = <u>520 in. lbs</u>

Any deformation before shearing would absorb part of this energy. Therefore, the energy required to shear out a 1¼ dia. plug under pure shear would be the minimum required to penetrate

<u>Jacket</u> - ¼" t - 216SS - 55000 psi y.p.

$U_{REQD.} = K\,T\,(\pi D)\,t^2$

$= .39(33000)\,\pi(1\tfrac{1}{4}).25^2$

$= \underline{5263 \text{ in. lbs}}$

OK. > 520 in lbs

K = .39 = penetration to fracture, S.S

Ref 7 - pg 13-15

T = .6 (55000) = 33000 psi

t = .25"

<u>Tank</u> - 5/16" t - 304SS - 30,000 psi y.p

T = .6 (30,000) = 18,000 psi

$U_{Req.} = K\,T\,(\pi D)\,t^2$

$= .39\,(18000)\,\pi\,(1\tfrac{1}{4}).3125^2$

$= \underline{2692 \text{ in lbs}}$

OK > 520 in lbs

Since the energy required to shear out a 1¼ in. dia. plug is considerably greater than that produced by the impacting bar, penetration is prevented in both shells.

1.4.5. PENETRATION - RELIEF VALVE GUARD

FIGURE WITHHELD UNDER 10 CFR 2.390

1.4.6. PENETRATION - EXPANSION TANK DRAIN VALVE GUARD

Assume entire energy is absorbed in deforming a 1" w strip along the free edge on one side. It is conservative to assume the length between points of inflection of this strip, which is fixed at one end to the cask and continuous over a support at the end away from the cask, is 4.5 − .25 − .25 = 4 in.

FIGURE WITHHELD UNDER 10 CFR 2.390

1.4.7 PENETRATION - VENT LINE GUARD

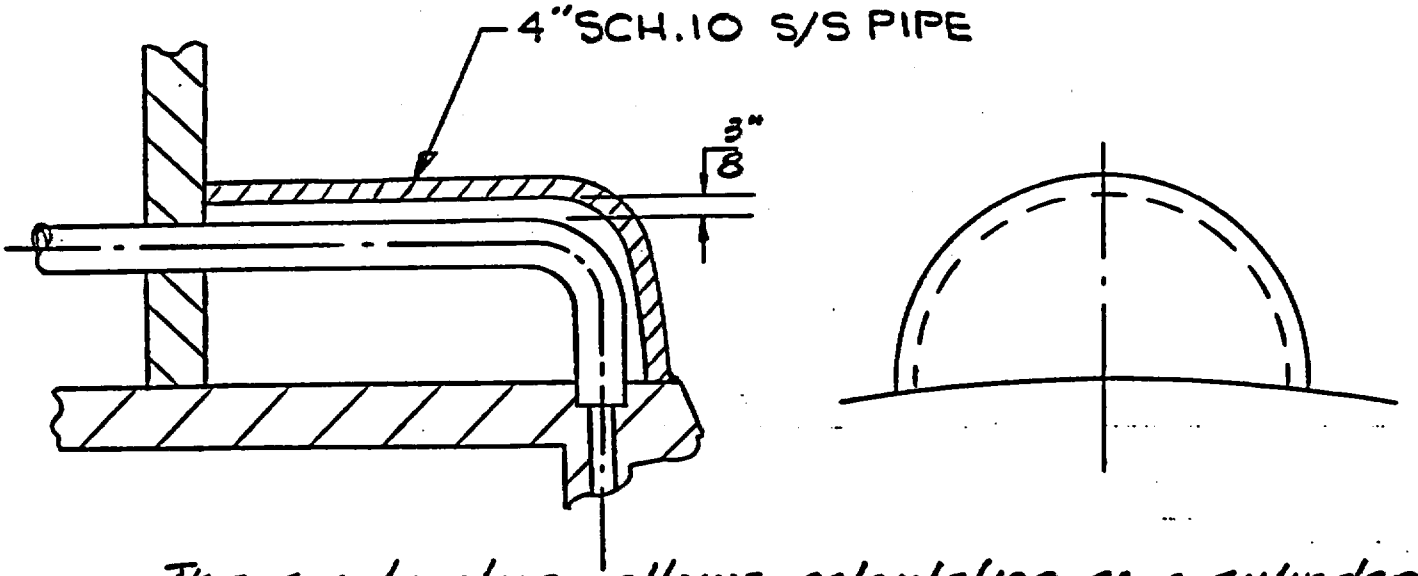

This construction allows calculation as a cylinder with closed ends and end supports, with a center load P concentrated over a very short length.

Roark Table XIII - Case 9

For S_2, $P = \dfrac{S_{yp}\, b^{3/2} t^{5/4}}{.130\, A^{1/2} R^{3/4}}$ where

$b = .625$ rad. pin, $t = .120$ wall thickness of 4" SCH.10

$A = 10.92$ constant, $R = 2.19"$ rad. pipe

$S_{yp} = 30000$ psi

$$P = \frac{30000(1.39)(.120)(.589)}{.130\,(1.348)(1.8)}$$

$P = 9444$ lbs going plastic

K.E. of drop = 13 lbs. x 40 in. = 520 in lbs

Penetration $= \dfrac{KE}{P} = \dfrac{520}{9440} = .055$ in. plastic deformation only, beyond elastic deflection.

A plastic deformation of .25 inches could be tolerated without damage to the vent line.

1.5 Differential Thermal Expansions

Check of thermal strain of the various elements in the cask structure to assure objectionable stresses are not generated in the structure.

FIGURE WITHHELD UNDER 10 CFR 2.390

TEMPERATURE DISTRIBUTION FOR VARIOUS CONDITIONS (°F)

LOCATION	Initial Steady State	0.5 hour hypothetical fire accident & post fire accident conditions						
		0.5 hr.	0.75 hr.	1 hr.	1.5 hr.	2 hr.	3 hr.	4 hr.
Aluminum Basket	661	670	691	716	757	783	807	813*
Inner Container	645	658	682	707	746	772	793	798*
Inner Shell	440	538	610	638	660	664*	656	648
Uranium Shell	373	582	617	623	627*	617	594	580
Lead	356	641*	621	621	621	605	581	---
Outer Shell	352	702*	621	617	611	596	572	558
Water Jacket Shell	340							

COEFFICIENTS OF THERMAL EXPANSION

α Uranium $= 17.39 \times 10^{-6}$ in/in/°C , 0°-400°C
α Uranium $= 9.661 \times 10^{-6}$ in/in/°F
α 304 S/S $= 9.9 \times 10^{-6}$ in/in/°F , 68°-1000°F

1.5.1 AXIAL EXPANSION - INNER CONTAINER / INNER SHELL

Largest temperature gradient occurs at initial steady state conditions.

Inner Container 645°F $\Delta T = 645° - 68° = 577°F$

$\epsilon_T = 9.9 \times 10^{-6} \times 577 \times 174.75 = \underline{.998}$

Length of inner container at temperature
$174.75 + .998 = \underline{175.748''}$

Inner Shell 440°F $\Delta T = 440° - 68° = 372°F$

$\epsilon_T = 9.9 \times 10^{-6} \times 372 \times 176.25 = \underline{0.649''}$

Length of inner shell at temperature
$176.25 + 0.649'' = \underline{176.899''}$

No axial interference between inner container and inner shell

1.5.2 AXIAL EXPANSION - INNER SHELL / URANIUM SHIELD

Largest temperature gradient occurs at initial steady state conditions.

Inner Shell 440°F $\Delta T = 440 - 68 = 372°F$

$\epsilon_T = 9.9 \times 10^{-6} \times 372° \times 169.375 = \underline{0.624}$

Length of inner shell at temperature
$169.375 + 0.624 = \underline{169.999}$

Uranium Shield 373°F $\Delta T = 373 - 68 = 305°F$

$\epsilon_T = 9.661 \times 10^{-6} \times 305 \times 169.625 = \underline{0.4998}$

Length of uranium shield at temperature
$169.625 + 0.4998 = \underline{170.1248}$

No axial interference between inner shell and uranium shield.

1.5.3 Axial Expansion - Uranium Shield / Outer Shell

Largest temperature gradient occurs 3.5 hours after the 0.5 hour fire terminates.

Uranium Shield 580°F $\Delta T = 580 - 68 = 512°F$
$\epsilon_T = 9.661 \times 10^{-6} \times 512 \times 172.750 = \underline{0.856}$

Length of uranium shield at temperature
$172.75 + 0.856 = \underline{173.606}$

Outer Shell 558°F $\Delta T = 558 - 68 = 490°F$

$\epsilon_T = 9.9 \times 10^{-6} \times 490° \times 172.781 = \underline{0.838}$

Length of outer shell at temperature
$172.781 + 0.838 = \underline{173.619}$

No axial interference between uranium shield and outer shell.

1.5.3.1. Axial Expansion Uranium Shield / Water Jacket

The condition which results in the largest temperature gradient, the uranium being the higher of the two, occurs at initial steady state conditions.

Uranium Shield 373°F $\Delta T = 373 - 68 = 305°F$

$\epsilon_T = 9.661 \times 10^{-6} \times 305 \times 172.75 = \underline{0.509}$

Length of uranium shield at temperature

$172.75 + 0.509 = \underline{173.259}$

Jacket Shell 340°F $\Delta T = 340 - 68 = 272°F$

$\epsilon_T = 9.9 \times 10^{-6} \times 272 \times 172.781 = \underline{0.4653}$

Length of jacket shell at temperature

$172.781 + 0.4653 = \underline{173.2463}$

No axial interference between uranium shield and the stainless steel walls.

1.5.3.2 Axial Expansion Outer Shell / Jacket Shell

The temperature gradient of concern is that which occurs at initial steady state condition.

Outer shell 352°F $\Delta T = 352 - 68 = 284°F$

$\epsilon_T = 9.9 \times 10^{-6} \times 284 \times 164.25 = \underline{0.462}$

Jacket shell 340°F $\Delta T = 340 - 68 = 272°F$

$\epsilon_T = 9.9 \times 10^{-6} \times 272 \times 164.25 = \underline{0.442}$

SHELL LOADINGS

Outer shell – Area = 69 in^2 , $E = 26.8 \times 10^6$

$$P_o = \frac{(.462 - d)\,69\,(26.8 \times 10^6)}{164.25}$$

Jacket shell – Area = 28.47 in^2 $E = 26.8 \times 10^6$

$$P_J = \frac{(d - .442)\,28.47\,(26.8 \times 10^6)}{164.25}$$

Now $P_o = P_J$ solving for d,

$$31.878 - 69d = 28.47d - 12.584$$
$$97.47d = 44.462$$
$$d = .45616$$

$$P_o = \frac{(.462 - .45616)\,69\,(26.8 \times 10^6)}{164.25} = \underline{65{,}749 \text{ lbs}}$$

$$S_c = \frac{65749}{69} = \underline{953 \text{ psi}}$$

$$P_J = \frac{(.45616 - .442)\,28.47\,(26.8 \times 10^6)}{164.25} = \underline{65{,}777 \text{ lbs}}$$

$$S_t = \frac{65777}{28.47} = \underline{2310 \text{ psi}} < S_y = 45900 \text{ psi}$$

Outer shell in compression and jacket shell in tension. Shell stresses are well below the material yield point stress

1.5.3.3. AXIAL EXPANSION OUTER SHELL / JACKET SHELL

The condition which results in the largest temperature gradient during the hypothetical fire accident case occurs 0.5 hrs. after the start of the fire.

Outer Shell 702°F $\Delta T = 702 - 68 = 634°F$

$\epsilon_T = 10.3 \times 10^{-6} \times 634°F \times 164.25 = \underline{1.0726}$

Outer Shell area = 69 in² $E = 24.9 \times 10^6$

$$P_o = \frac{(d - 1.0726)\,69\,(24.9 \times 10^6)}{164.25}$$

$$= (10.46027d - 11.21969)\,10^6$$

Jacket Shell 1280°F $\Delta T = 1280 - 68 = 1212°F$

$\epsilon_T = 10.3 \times 10^{-6} \times 1212°F \times 164.25 = \underline{2.05043}$

Jacket Shell area 28.47 $E = 22.4 \times 10^6$

$$P_J = \frac{(2.05043 - d)\,28.47\,(22.4 \times 10^6)}{164.25}$$

$$= (7.9610 - 3.8826d)\,10^6$$

Now $P_o = P_J$. Solving for d

$$10.46027d - 11.21969 = 7.9610 - 3.8826d$$
$$14.34287d = 19.18069$$
$$d = 1.3373$$

$$P_o = [10.46027(1.3373) - 11.21969]\,10^6 = \underline{2{,}768{,}820 \text{ lbs.}}$$

Outer Shell Stress

$$S_t = \frac{2,768,820}{69} = \underline{40128 \text{ psi Tension}} < S_y = 40900 \text{ psi}$$

Jacket Shell Stress

$$S_c = \frac{2,768,820}{28.47} = \underline{97,254 \text{ psi Compression}}$$

Plastic yielding of the jacket shell under accident conditions is acceptable. There is no breach of the outer shell and containment of the lead shield is assured. A breach of the water jacket would be of no consequence since containment of water is not a requirement for shielding adequacy. The water jacket, however, would only suffer some permanent compression and possible slight buckling.

1.5.4 Radial Expansion Aluminum Basket/Inner Container

Largest temperature gradient occurs at initial steady state conditions.

Aluminum Basket 661°F $\Delta T = 661° - 68° = 593°F$

$$* \; L_t = L_o \left[1 + C(12.19t + 0.003115t^2)10^{-6} \right]$$

* Reference Alcoa Aluminum Handbook

L_t = Length at temperature
L_o = Length at 68°F
C = Alloy constant (from table)
t = 593°F

$$L_t = 12.550\left[1 + 0.990(12.19 \times 593 + 0.003115 \times 593^2)10^{-6}\right]$$

$$L_t = \underline{12.653}$$

Inner Container 645°F $\Delta T = 645 - 68 = 577°F$

$$\epsilon_T = 9.9 \times 10^{-6} \times 577 \times 12.625 = 0.0721$$

I.D. of inner container at temperature
$12.625 + 0.0721 = \underline{12.697}$

No radial interference between aluminum basket and inner container

1.5.5 Radial Expansion - Inner Container/Inner Shell

Largest temperature gradient occurs at initial steady state conditions

Inner Container 645°F $\Delta T = 645° - 68 = 577°F$

$$\epsilon_T = 9.9 \times 10^{-6} \times 577 \times 13.145 = \underline{0.0751}$$

O.D. of inner container at temperature
$13.145 + 0.0751 = \underline{13.220}$

Inner Shell 440°F $\Delta T = 440 - 68 = 372°F$

$$\epsilon_T = 9.9 \times 10^{-6} \times 372 \times 13.375 = \underline{0.049}$$

I.D. of inner shell at temperature
$13.375 + 0.049 = \underline{13.424}$

No radial interference between inner container and inner shell.

1.5.6 Radial Expansion Inner Shell/Uranium Shield

Largest temperature gradient occurs at initial steady state conditions

Inner Shell 440°F $\Delta T = 440 - 68 = 372°F$

$$\epsilon_T = 9.9 \times 10^{-6} \times 372 \times 14.400 = \underline{0.053}$$

O.D. of inner shell at temperature
$14.400 + 0.053 = \underline{14.453}$

Uranium Shield 373°F $\Delta T = 373 - 68 = 305°F$

$\epsilon_T = 9.661 \times 10^{-6} \times 305 \times 14.453 = 0.0426$

I.D. of uranium shield at temperature
$14.453 + 0.0426 = 14.4956$

No radial interference between inner shell and uranium shield.

1.5.7 Radial Expansion Uranium Shield/Lead/Outer Shell

Data	Uranium	Lead	Outer S-S	Neutron Shield	Water Jacket Shell
Inner Radius, in.	7.25	10.00	12.125	13.00	18.00
Outer Radius, in.	10.00	12.125	13.00	18.00	18.25
Common Effective length, in.	161.38	161.38	161.38	161.38	161.38
Steady State Operating Temp. °F	373	356	352	346	340
Pressure On:					
Inner Radius, psi	0	p_a	p_c	80.96	80.96
Outer Radius, psi	p_a	p_c	80.96	80.96	0
Material Proterties at Temperature					
Coeff. of Linear					
Expansion, in./in./°F	9.661×10^{-6}	16.3×10^{-6}	9.9×10^{-6}	-	9.9×10^{-6}
Elastic Modulus, psi	24.0×10^{6}	1.95×10^{6}	26.8×10^{6}	-	26.8×10^{6}
Yield Stress, psi	27,000	711	45,900	-	45,900
Poisons Ratio	0.2	0.45	0.3	-	0.3

Procedure of Analysis

To study the behavior of the Uranium-Lead-Outer Stainless Steel System, a calculation is made which will give a maximum stress by the approximation method. The lead annulus is simplified to a full simple cylinder of inner radius 10.00 in., outer rad. of 12.125 in. and the length of the annulus is 162.625 in. This simplified volume gives us a greater volume of lead than actual and hence, a greater than actual increase in volume due to the thermal expansion.

The lead is assumed to exert a uniform pressure "P". The expansion of the annular space from pressure "P" and the thermal expansion is calculated. This valve is equated to a free, unrestricted, thermally expanded volume of lead, to give the value of "P". In reality, the lead would be compressed radially and axially and its final volume would be less and hence the actual "P" would be less than the calculated value.

The combines stresses are compared with the yield stresses to demonstrate the safety of the system.

Thermal Expansions

Initial volume of Lead void space

$$= \pi \ (12.125^2 - 10^2) \times 161.38$$

$$= 23{,}836.462 \text{ in.}^3 = V_1$$

Increase in Volume of Lead when it is free of all external stresses

$$= V_1 \times \Delta T \times 3\alpha$$

$$= 23{,}836.462 \times (356-68) \times 3 \times 16.3 \times 10^{-6}$$

$$= 335.694 \text{ in.}^3 = \Delta V$$

Increase in internal radius of Outer Stainless Steel

$$= R \times \Delta T \times \alpha$$

$$= 12.125 \times (352-68) \times 9.9 \times 10^{-6}$$

$$= 0.034 \text{ in.} = U_{OSS,T}$$

Increase in external radius of Uranium

$$= 10.00 \times (373-68) \times 9.661 \times 10^{-6} = 0.0295 \text{ in.} = U_{U,T}$$

Axial Stresses Due to Differential Thermal Expansion

The cask construction is such that the axial expansions of Outer S-S and the Water Jacket Shell interact with the Water Pressure and Lead Pressure.

Free Axial Thermal Expansions of:

. Water Jacket Shell = $L \times \Delta T \times \alpha$

$= 161.38 \times (340-68) \times 9.9 \times 10^{-6}$

$= 0.4346$ ins. $= l_{WJ}$

Outer S-S $= 161.38 \times (352-68) \times 9.9 \times 10^{-6}$

$= 0.4537$ in. $= l_{OSS}$

Axial Pressure in:

Water = 80.96 psi Ref. 12

Lead = P (unknown now)

Axial Forces due to Pressure:

Water $= \pi (R^2 - r^2) \times p = F_W$

$= \pi \quad (18^2 - 13^2) \times (-80.96)$

$= -39{,}423.2179$ lbs. (- ∴ compressive)

Lead $= \pi \quad (12.125^2 - 10^2) \times (-P) = F_L$

$= -147.704$ lbs. (P)

Let "l" ins. be the resultant axial expansion due to these forces

∴ Axial forces produced are:

Water Jacket Shell = (Area) $\times \left(\frac{\text{Change in Length}}{\text{Original Length}}\right) \times \left(\frac{\text{Elastic}}{\text{Modulus}}\right)$

$$= \pi (R^2 - r^2) \times \frac{(l - l_{WJ})}{161.38} \times E_{WJ} = F_{WJ}$$

$$= \pi (18.25^2 - 18^2) \times \frac{(l - 0.4346)}{161.38} \times 26.8 \times 10^6$$

$$= (4.728 \times l - 2.055) \times 10^6$$

$$\text{Outer S-S} = \pi (13^2 - 12.125^2) \frac{(l - 0.4537)}{161.38} \times 26.8 \times 10^6$$

$$= (11.4696 \times l - 5.204) \times 10^6 = F_{OSS}$$

Hence, making a force balance in the axial direction, we have

$$F_W + F_L + F_{WJ} + F_{OSS} = \Sigma F = 0$$

$$\therefore -39{,}423.2179 - 147.704 \times P + (4.728\, l - 2.055) \times 10^6 + (11.4696\, l - 5.204)\, 10^6 = 0$$

$$\therefore l = 0.45 + 9.119 \times 10^{-6} \times P$$

$\therefore$ Axial stress (assumed constant over radius) for:

$$\text{Outer S-S} = \frac{F_{OSS}}{\pi (13^2 - 12.125^2)} = \sigma_{zOSS}\ 1.514 \times P - 525.166$$

<u>Radial Expansion Due to Radial and Axial Stresses</u>

For thick cylinders with internal radius R_1,

External radius R_2, internal pressure P_1,

External pressure P_o & Axial Stress σ_z,

The radial and hoop stresses at any radius "r" are given by:

$$\sigma_r = \frac{1}{R_2^2 - R_1^2} \left[R_1^2 \; p_1 - R_2^2 \; p_o - \left(\frac{R_1 \cdot R_2}{r}\right)^2 (p_1 - p_o) \right.$$

$$\sigma_h = \frac{1}{R_2^2 - R_1^2} \left[R_1^2 \; p_1 - R_2^2 \; p_o + \left(\frac{R_1 \; R_2}{r}\right)^2 (p_1 - p_o) \right.$$

For cylinderical coordinates, hoop strain is given by

$$\varepsilon_h = \frac{U}{r} = \frac{1}{E}\left[\sigma_h - v(\sigma_r + \sigma_z)\right]$$

Where U = Radial displacement at Radius 'r'.

$$\therefore \; U = \frac{r}{E\,(R_2^2 - R_1^2)} \left[(1-v)\,(R_1^2 \; p_1 - R_2^2 \; p_o) + (1+v)\left(\frac{R_1 \; R_2}{r}\right)^2 (p_1 - p_o \right.$$

$$- \frac{v\,\sigma_z}{E}$$

= Radial displacement due to pressure and axial stress.

$\therefore$ Radial displacements due to pressure and axial stresses for:

Outer S-S, at inner radius

$$= \frac{12.125}{26.8 \times 10^6\,(13^2 - 12.125^2)} \left[(1-0.3\,(12.125^2 \times p - 13^2 \times 80.96) + (1 + 0.3) \times (P - 80.96) \right.$$

$$- \frac{0.3 \times 1.514 \times P - 525.166}{26.8 \times 10^6}$$

$$= 6.622 \times 10^{-6} \times P - 557.266 \times 10^{-6} \text{ in.} = U_{OSS,\,P}$$

Uranium at outer radius , (σ_z = 0 here)

$$= \frac{10.00}{24.0 \times 10^6 \, (10^2 - 7.25^2)} \left[(1-0.2)\,(-10^2 \times p) + (1+0.2) \times 7.25^2\,(-p) \right]$$

$$= 1.257 \times 10^{-6} \times P \text{ in.} = U_{U,P}$$

<u>New Dimensions of Lead Annulus</u>

Length = Initial length + l

$$= 161.38 + \left[0.451 + 9.1188 \times 10^{-6} \; P \right]$$

$$= 9.1188 \times 10^{-6} \times P + 161.831 = L$$

Outer Radius = Initial Outer Radius + $U_{OSS,\,T}$ + $U_{OSS,P}$

$$= 12.125 + 0.034 + 6.622 \times 10^{-6} \times P - 557.266 \times 10^{-6}$$

$$= 6.622 \times 10^{-6} \times P + 12.159 = R_2$$

Inner Radius = Initial Inner Radius + $U_{U,T}$ + $U_{U,P}$

$$= 10.00 + 0.0294 - 1.2566 \times 10^{-6} \times P$$

$$= -1.2566 \times 10^{-6} \times P + 10.029 = R_1$$

Outer Area = $\pi (R_2)^2 = \pi \left[161.032 \times 10^{-6} \times P + 147.8299 \right] = A_2$

Inner Area = $\pi (R_1)^2 = \pi \left[-25.208 \times 10^{-6} \times P + 100.590 \right] = A_1$

Cross-Sectional Area = $A_2 - A_1$

$$= \pi \left[186.240 \times 10^{-6} \times P + 47.2397 \right]$$

Volume = $L \times (A_2 - A_1) = V_2$

$$\therefore \; V_2 = 96{,}038.915 \times 10^{-6} \times P + 24{,}016.957$$

Equating the Volume Increases of Lead and Lead Annulus

$$\Delta V = V_2 - V_1$$

$$335.694 = 24{,}016.957 + 96{,}038.915 \times 10^{-6} \times P - 23836.462$$

$$\therefore P = 1{,}615.995 \text{ psi.}$$

Hence, when the pressure in the Lead Annulus

= 1,616 psi the free expansion of the lead is taken up by the Lead Annulus.

Results

Pressure in Lead Annulus = 1,616 = P

Maximum Hoop Stresses in:

Outer Stainless Steel = $\sigma_{h,max.}$ (at inner rad.)

$$\sigma_{h,max.} = \frac{1}{R_2^2 - R_1^2}\left[R_1^2\ p_i - R_2^2\ p_o + R_2^2\ (p_i - p_o)\right]$$

$$= \frac{1}{R_2^2 - R_1^2}\left[(R_1^2 + R_2^2)\ p_i - 2\ R_2^2\ p_o\right]$$

$$= \frac{1}{13^2 - 12.125^2}\left[(12.125^2 + 13^2) \times 1{,}616 - 2(13^2) \times 80.9\right.$$

$$= 21{,}984.558 = \sigma_{i,OSS} = 21{,}985 \text{ psi.}$$

Uranium (at inner rad. & p_i) = 0

$$\sigma_{h,max.} = \frac{1}{10^2 - 7.25^2} - 2 \times (10^2) \times 1,616$$

$$= 6813.175 = \sigma_{1,U} = 6813 \text{ psi}$$

Radial Stresses in:

Outer S-Steel (at inner rad.) = - 1,616 (compressive)

$= \sigma_{2,OSS}$

Uranium (at inner rad.) = 0 = $\sigma_{2,U}$

Axial Stresses in:

Outer S-Steel = 1.514 x P - 525.166

= 1,922.013 psi = $\sigma_{3,OSS}$ = 1922 psi

Uranium = 0 = $\sigma_{3,U}$

From Distrotion Energy Criterion, for Combined Stresses, the equivalent combined stress σ_o is given by:

$$2\sigma_o^2 = (\sigma_1 - \sigma_2)^2 + (\sigma_2 - \sigma_3)^2 + (\sigma_3 - \sigma_1)^2$$

$\therefore$ For Outer S-Steel Shell,

$$2\sigma_o^2 = (21,985 + 1,616)^2 + (-1,616 - 1,922)^2 + (1,922 - 21,985)^2$$

$\therefore \sigma_{o,OSS}$ = 22,045.959 psi $< \sigma_y$ for S-Steel

= 22,046 $< \sigma_y$ = 45,900 psi.

For Uranium

$$2\sigma_o^2 = (6,813)^2 + (6,813)^2$$

$\therefore \sigma_{o,U}$ = (6,813) psi $< \sigma_y$ for Uranium = 27,000 psi.

1.5.8 Radial Expansion Uranium Shield/Lead/Outer Shell

The highest temperatures thru the cask walls occurs 0.5 hrs. after the start of the hypothetical fire accident condition.

Uranium shield 582° F, 20" O.D. $\Delta T = 582-68=514°$ F

Lead Shield 641°F $\Delta T = 641-68=573°F$

Volume of lead = 23146 in.^{3}

Volume of void = 650 in.^{3}

Linear expansion of lead 16.3×10^{-6} in./in./°F.

Outer Shell 702°F, 24.25" I.D., $\Delta T = 702-68= 634°F$

Increase in volume of Uranium Shield over 160" length

$$\epsilon_T = 9.661 \times 10^{-6} \times 514 \times 10 = \underline{.04966}$$

Volume increase = (π 20.04966) .04966 (160) = <u>500.382 in.^{3}</u>

Increase in volume due to Outer Shell expansion over 160"

$$\epsilon_T = 10.3 \times 10^{-6} \times 634 \times 12.125 = \underline{.079179}$$

Volume increase = (π 24.204179) .079179 (160) = 963.137 in.^{3}

Net increase in space available for lead

$$963.137 - 500.382 = 462.755 \text{ in.}^3$$

Total space available, including original void

$$462.755 + 650 = 1112.755 \text{ in.}^3$$

Bulk expansion of lead shield to 641°F

$$\epsilon_T = 3 \times 16.3 \times 10^{-6} \times 573 \times 23146 = \underline{648.5 \text{ in.}^3}$$

Expansion of lead on melting

$$.036\ (23146) = \underline{833.3 \text{ in.}^3}$$

Total bulk increase of lead = 648.5 + 833.3 = <u>1481.8 in.^{3}</u>

Deficiency in available space = 1481.8 - 1112.755 = <u>369.045</u>

Consider expanding the Outer Shell over 160" length Surface area of I.D. = 160 (π 24.4084) = 12266.7 in.^{2}

Radial expansion required $\frac{369.045}{12266.7}$ = 0.030 " radial

Hoop Strain = $\frac{.030}{12.2042}$ = .246%

M.S. = $\frac{48.0}{.246}$ - 1 = 181.9

Plastic yielding of the outer shell under accident condition is acceptable since there is no breach incurred and containment of the lead shielding is assured.

The following analysis is for the change in conditions from 0.5 hrs. after start of the hypothetical fire accident condition to 1.5 hrs. after same.

Uranium shield 627°F, 20" O.D. ΔT = 627 - 582 = +45°F

Lead Shield 621°F ΔT = 621 - 641 = -20°F

Outer Shell 611 °F, 24.25" I.D. , ΔT = 611 - 702 = -90°F

Increase in volume of Uranium Shield over 160 " length

$$\epsilon_T = 9.661 \times 10^{-6} \times (+45) \times 10.04966 = .004369$$

Mean Dia. = 20. + 2 (.04966) + .004369 = 20.103689

Vol. increase = π(20.103689) (.004369) 160 = +44.14969 in.^{3}

Decrease in vol. due to Outer Shell contraction over 160"

Previous rad. = 12.125 + .079179 = 12.204179

$$\epsilon_T = 10.3 \times 10^{-6} \times (-91) (12.204179) = -.07438976$$

Mean Dia. = 2 (12.204179) - .011438976 = 24.39692

Vol. decrease = π (24.39692) (-.011438976) = -140.27785 in.^{3}

Net decrease in space available for lead

$$-140.27785 - 44.14969 = -184.42754 \text{ in.}^3$$

Bulk contraction of lead from 641° to 621° F

$$\epsilon_T = 3 \times 16.3 \times 10^{-6} (20)(23146 + 1481.8) = -24.08599 \text{ in.}^3$$

Further deficiency in available space

$$-184.42754 + 24.08599 = -160.34155 \text{ in.}^3$$

This is equivalent to expanding the outer shell over 160"

Surface area of I.D. = 160 (π 24.4034) = 12266.7 in.^{2}

Radial expansion required

$$\frac{160.34155}{12266.7} = .013" \text{ radial}$$

$$\text{Hoop strain} = \frac{.013}{12.20} = .00106 = .106\%$$

Total strain from start up is .246 + 106 = .352%

$$\text{M.S.} = \frac{45.}{.352} - 1 = 126.8$$

Very slight plastic yielding is indicated.

This page intentionally left blank.